| Pages | |
|---|---|
| INF-1 | General Information |
| PK-1 | Parts Packages |
| 1-1 | Group 1 Accessories |
| 2-1 | Group 2 Front Suspension |
| 3-1 | Group 3 Axle - Rear |
| 4-1 | Group 4 Brake - Parking |
| 5-1 | Group 5 Brake - Service |
| 6-1 | Group 6 Clutch |
| 7-1 | Group 7 Cooling |
| 8-1 | Group 8 Electrical |
| 9-1 | Group 9 Engine |
| 10-1 | Group 10 Engine Oiling |
| 11-1 | Group 11 Exhaust |
| 12-1 | Group 12 Fenders and Sheet Metal |
| 13-1 | Group 13 Frame |
| 14-1 | Group 14 Fuel |
| 15-1 | Group 15 Hood |
| 16-1 | Group 16 Prop. Shaft & Univ. Jt. |
| 17-1 | Group 17 Springs |
| 18-1 | Group 18 Standard Parts |
| 19-1 | Group 19 Steering |
| 21-1 | Group 21 Transmission |
| 22-1 | Group 22 Wheels |
| 23-1 | Group 23 Body |
| 24-1 | Air Conditioning |
| AL-1 | Alphabetical Index |
| NU-1 | Numerical Index |
| X-1 | Vendor Cross Reference |


# MOPAR

## PASSENGER CAR PARTS CATALOG

## "P" SERIES

## 1960

- PLYMOUTH
- DODGE
- DE SOTO
- CHRYSLER
- IMPERIAL

MoPar

OCTOBER 1959


CHRYSLER MOTORS CORPORATION
MOPAR DIVISION
DETROIT 31, MICHIGAN


MyMopar.com

Printed in U.S.A.

81-690-0006

# INDEX TO INFORMATION PAGES


| | Page No. |
|---|---|
| Abbreviations | INF-10 |
| Area Parts Plants | INF-19 |
| Back Orders | INF-15 |
| Emergency Orders<br>"P" Section Items<br>"D" Section Items | INF-15 |
| Engine Identification | INF-13 |
| Engine Numbers | INF-13 |
| Interfiling Revision Pages | INF- 9 |
| Locating Parts | INF-10 |
| Mail Orders<br>"P" Section Items<br>"D" Section Items | INF-16 |
| Master Code Letters | INF-17 |
| Model Designation | INF- 4 |
| Model Specifications<br>Plymouth<br>Dodge<br>DeSoto<br>Chrysler<br>Imperial | INF- 6 |
| Order Forms | INF-16 |
| Ordering Information | INF-15 |
| "P" Section Items | INF-15 |
| Part Type Code System | INF-12 |
| Revision Service to Parts List | INF- 9 |
| Serial Number Designation | INF- 5 |
| Specifying Information | INF-10 |
| Standard Parts | INF-10 |
| Stocking Codes | INF-15 |
| Symbols Used In Parts List | INF- 9 |
| Telephone and Telegraphic Orders<br>"P" Section Items<br>"D" Section Items | INF-17 |
| Trim Orders | INF-16 |
| Utility Code | INF-17 |
| Vehicle Serial Numbers | INF-12 |




MyMopar.com

## 1960 PASSENGER CAR MODEL DESIGNATION

The following information will acquaint you with the model code system being used with the 1960 series vehicles.

The year is identified by the letter "P" for 1960.

Each car make is identified by the letters P for Plymouth, D - Dodge, S - DeSoto, C - Chrysler, and Y for the Imperial.

The various chassis for each make are identified by the numbers 1, 2 and 3. In the Plymouth No. 1 represents a 6 cylinder chassis and No. 2 an 8 cylinder chassis. On Dodge No. 3 represents a 6 cylinder chassis and No. 4 an 8 cylinder chassis on 118" W.B. cars. On DeSoto, Chrysler, and Imperial, the numbers 1, 2, and 3 indicate one of the various 8 cylinder chassis built.

The last letter in the model code indicates the price class in which the particular model falls, as shown below.

L - Low price class (Savoy, Seneca, Matador, FireFlite, Windsor, Imperial Custom)

M - Medium price class (Belvedere, Pioneer, Adventurer, Saratoga, Imperial Crown)

H - High price class (Fury, Phoenix, Polara, New Yorker, Imperial LeBaron)

Example:

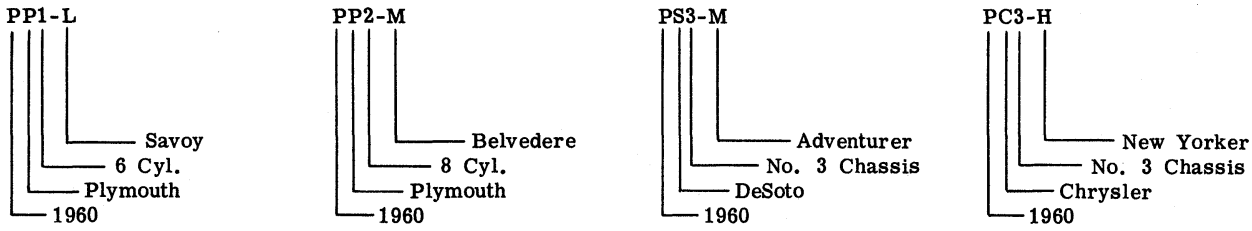


A glance at the model designation will enable you to identify a model by year, make of car, number of cylinders and price class.



MyMopar.com

# 1960 PASSENGER CAR SERIAL NUMBER DESIGNATION

The new serial number coding system will be uniform for all car assembly plants. The code breakdown is as follows:

The serial number will consist of a ten (10) digit numeric sequence number.

The 1st digit is the numeric identification for car line used in the uniform body codes.

2. Plymouth 6 Cyl.
3. Plymouth 8 Cyl.
4. Dodge 6 Cyl. Dart
5. Dodge 8 Cyl. Dart
6. Dodge - Matador or Polara
7. DeSoto
8. Chrysler
9. Imperial

The 2nd digit is the model series identification.

1. Savoy, Seneca, Matador, FireFlite, Windsor, Imperial Custom
2. Belvedere, Pioneer, Adventurer, Saratoga, Imperial Crown
3. Fury, Phoenix, Polara, New Yorker, Imperial LeBaron
4. 300F
5. Station Wagon, Savoy, Seneca, Matador, Windsor
6. Station Wagon, Belvedere, Pioneer
7. Station Wagon, Fury, Polara, New Yorker
8. Taxi
9. Special Models

The third digit (0 - indicates 1960 models)

The fourth digit will be a numeric designation for producing plant.

1. Plymouth Plant - Detroit
2. Dodge Assembly Plant - Detroit
3. Jefferson Plant - Detroit
4. Imperial Plant - Detroit
5. Los Angeles Plant - Calif.
6. Newark Plant - Del.
7. St. Louis Plant - Valley Park, Mo.

The last six digits will consist of a six digit sequence number. The sequence numbers will all begin with 100001. Each model series for each car line will begin with sequence number 100001.



MyMopar.com

# 1960 PLYMOUTH

## Model Specifications

| | 1960 MODEL | 1959 CODE | NO. CYL. | CAR SERIAL NO. FIRST | |
|---|---|---|---|---|---|
| PP1-L | SAVOY | MP1-L | 6 | DETROIT | 2101-100001 |
| | | | | ST. LOUIS | 2107-100001 |
| | | | | NEWARK | 2106-100001 |
| | | | | LOS ANGELES | 2105-100001 |
| PP1-M | BELVEDERE | MP1-M | 6 | DETROIT | 2201-100001 |
| | | | | ST. LOUIS | 2207-100001 |
| | | | | NEWARK | 2206-100001 |
| | | | | LOS ANGELES | 2205-100001 |
| PP1-H | FURY | MP1-H | 6 | DETROIT | 2301-100001 |
| | | | | ST. LOUIS | 2307-100001 |
| | | | | NEWARK | 2306-100001 |
| | | | | LOS ANGELES | 2305-100001 |
| PP2-L | SAVOY | MP2-L | 8 | DETROIT | 3101-100001 |
| | | | | ST. LOUIS | 3107-100001 |
| | | | | NEWARK | 3106-100001 |
| | | | | LOS ANGELES | 3105-100001 |
| PP2-M | BELVEDERE | MP2-M | 8 | DETROIT | 3201-100001 |
| | | | | ST. LOUIS | 3207-100001 |
| | | | | NEWARK | 3206-100001 |
| | | | | LOS ANGELES | 3205-100001 |
| PP2-H | FURY | MP2-H | 8 | DETROIT | 3301-100001 |
| | | | | ST. LOUIS | 3307-100001 |
| | | | | NEWARK | 3306-100001 |
| | | | | LOS ANGELES | 3305-100001 |
| PP1-L | SAVOY SUBURBAN | MP1 | 6 | DETROIT | 2501-100001 |
| | | | | ST. LOUIS | 2507-100001 |
| | | | | NEWARK | 2506-100001 |
| | | | | LOS ANGELES | 2505-100001 |
| PP1-M | BELVEDERE SUBURBAN | MP1 | 6 | DETROIT | 2601-100001 |
| | | | | ST. LOUIS | 2607-100001 |
| | | | | NEWARK | 2606-100001 |
| | | | | LOS ANGELES | 2605-100001 |
| PP2-L | SAVOY SUBURBAN | MP2 | 8 | DETROIT | 3501-100001 |
| | | | | ST. LOUIS | 3507-100001 |
| | | | | NEWARK | 3506-100001 |
| | | | | LOS ANGELES | 3505-100001 |
| PP2-M | BELVEDERE SUBURBAN | MP2 | 8 | DETROIT | 3601-100001 |
| | | | | ST. LOUIS | 3607-100001 |
| | | | | NEWARK | 3606-100001 |
| | | | | LOS ANGELES | 3605-100001 |
| PP2-H | FURY SUBURBAN | MP2 | 8 | DETROIT | 3701-100001 |
| | | | | ST. LOUIS | 3707-100001 |
| | | | | NEWARK | 3706-100001 |
| | | | | LOS ANGELES | 3705-100001 |



MyMopar.com

# 1960 DODGE
# MODEL SPECIFICATIONS

| | 1960 MODEL | 1959 CODE | NO. CYL. | CAR SERIAL NO. FIRST | |
|---|---|---|---|---|---|
| PD3-L | DART SENECA | | 6 | DETROIT | 4102-100001 |
| | | | | ST. LOUIS | 4107-100001 |
| | | | | NEWARK | 4106-100001 |
| | | | | LOS ANGELES | 4105-100001 |
| PD3-L | DART SENECA SUBURBAN | | 6 | DETROIT | 4502-100001 |
| | | | | ST. LOUIS | 4507-100001 |
| | | | | NEWARK | 4506-100001 |
| | | | | LOS ANGELES | 4505-100001 |
| PD3-M | DART PIONEER | | 6 | DETROIT | 4202-100001 |
| | | | | ST. LOUIS | 4207-100001 |
| | | | | NEWARK | 4206-100001 |
| | | | | LOS ANGELES | 4205-100001 |
| PD3-M | DART PIONEER SUBURBAN | | 6 | DETROIT | 4602-100001 |
| | | | | ST. LOUIS | 4607-100001 |
| | | | | NEWARK | 4606-100001 |
| | | | | LOS ANGELES | 4605-100001 |
| PD3-H | DART PHOENIX | | 6 | DETROIT | 4302-100001 |
| | | | | ST. LOUIS | 4307-100001 |
| | | | | NEWARK | 4306-100001 |
| | | | | LOS ANGELES | 4305-100001 |
| PD4-L | DART SENECA | | 8 | DETROIT | 5102-100001 |
| | | | | ST. LOUIS | 5107-100001 |
| | | | | NEWARK | 5106-100001 |
| | | | | LOS ANGELES | 5105-100001 |
| PD4-L | DART SENECA SUBURBAN | | 8 | DETROIT | 5502-100001 |
| | | | | ST. LOUIS | 5507-100001 |
| | | | | NEWARK | 5506-100001 |
| | | | | LOS ANGELES | 5505-100001 |
| PD4-M | DART PIONEER | | 8 | DETROIT | 5202-100001 |
| | | | | ST. LOUIS | 5207-100001 |
| | | | | NEWARK | 5206-100001 |
| | | | | LOS ANGELES | 5205-100001 |
| PD4-M | DART PIONEER SUBURBAN | | 8 | DETROIT | 5602-100001 |
| | | | | ST. LOUIS | 5607-100001 |
| | | | | NEWARK | 5606-100001 |
| | | | | LOS ANGELES | 5605-100001 |


MyMopar.com

# 1960 DODGE
# MODEL SPECIFICATIONS - Cont'd

| | 1960 MODEL | 1959 CODE | NO. CYL. | CAR SERIAL NO. FIRST | |
|---|---|---|---|---|---|
| PD4-H | DART PHOENIX | | 8 | DETROIT | 5302-100001 |
| | | | | ST. LOUIS | 5307-100001 |
| | | | | NEWARK | 5306-100001 |
| | | | | LOS ANGELES | 5305-100001 |
| PD1-L | MATADOR | MD2 | 8 | DETROIT | 6102-100001 |
| | | | | DETROIT | 6103-100001 |
| | | | | ST. LOUIS | 6107-100001 |
| | | | | NEWARK | 6106-100001 |
| | | | | LOS ANGELES | 6105-100001 |
| PD1-L | MATADOR SUBURBAN | | 8 | DETROIT | 6502-100001 |
| | | | | ST. LOUIS | 6507-100001 |
| | | | | NEWARK | 6506-100001 |
| | | | | LOS ANGELES | 6505-100001 |
| PD2-H | POLARA | MD3 | 8 | DETROIT | 6302-100001 |
| | | | | DETROIT | 6303-100001 |
| | | | | ST. LOUIS | 6307-100001 |
| | | | | NEWARK | 6306-100001 |
| | | | | LOS ANGELES | 6305-100001 |
| PD2-H | POLARA SUBURBAN | MD3 | 8 | DETROIT | 6702-100001 |
| | | | | DETROIT | 6703-100001 |
| | | | | ST. LOUIS | 6707-100001 |
| | | | | NEWARK | 6706-100001 |
| | | | | LOS ANGELES | 6705-100001 |



MyMopar.com

## NOTES



MyMopar.com

# 1960 DESOTO
# Model Specifications

| | 1960 MODEL | 1959 CODE | NO. CYL. | CAR SERIAL NO. FIRST | |
|---|---|---|---|---|---|
| PS1-L | FIREFLITE | MS1 | 8 | DETROIT | 7103-100001 |
| PS3-M | ADVENTURE | MS3 | 8 | DETROIT | 7203-100001 |

# 1960 CHRYSLER
# Model Specifications

| | 1960 MODEL | 1959 CODE | NO. CYL. | CAR SERIAL NO. FIRST | |
|---|---|---|---|---|---|
| PC1-L | WINDSOR | MC1 | 8 | DETROIT<br>LOS ANGELES | 8103-100001<br>8105-100001 |
| PC1-L | WINDSOR-SUBURBAN | MC1 | 8 | DETROIT | 8503-100001 |
| PC2-M | SARATOGA | MC2 | 8 | DETROIT<br>LOS ANGELES | 8203-100001<br>8205-100001 |
| PC3-H | NEW YORKER | MC3 | 8 | DETROIT<br>LOS ANGELES | 8303-100001<br>8305-100001 |
| PC3-H | NEW YORKER-SUBURBAN | MC3 | 8 | DETROIT | 8703-100001 |

# 1960 IMPERIAL
# Model Specifications

| | 1960 MODEL | 1959 CODE | NO. CYL. | CAR SERIAL NO. FIRST | |
|---|---|---|---|---|---|
| PY1-L | IMPERIAL CUSTOM | MY1-L | 8 | DETROIT | 9104-100001 |
| PY1-M | IMPERIAL CROWN | MY1-M | 8 | DETROIT | 9204-100001 |
| PY1-H | IMPERIAL LE BARON | MY1-H | 8 | DETROIT | 9304-100001 |



MyMopar.com

## SYMBOLS USED IN THIS PARTS CATALOG

The following symbols are used in the Parts Catalog and revisions thereto:

* - An asterisk preceding a part number indicates a change or addition.

⊟ - A double box preceding a part number indicates parts which have been added and not previously published.

★ - A star symbol in the "Per Car" column means "use as required."

( ) - The numerals within parenthesis in the model column refer to notes at the bottom of the page. These notes have been used wherever necessary to further explain model application, serial number breaks, etc. Such notes are numbered and cross referenced to the item to which they apply.

## PARTS CATALOG REVISION SERVICE

GENERAL

Subscribers to the MoPar Passenger Car Parts Catalog Revision Service will be provided with revision pages incorporating latest information. Proper interfiling of the revision pages will insure the subscriber a complete and up-to-date Parts Book.

Accompanying each mailing of a set of revision pages is a covering letter which outlines the contents of the particular revision: Group Name, Group Number, and Page Numbers being eliminated, replaced, or added to each revised group. It is advised that the letter be read carefully to avoid elimination of pages which are still current.

## INTERFILING REVISION PAGES

The importance of prompt interfiling of revision pages upon receipt cannot be stressed too greatly.

The following method for interfiling revised and new pages has been found to be efficient and time saving and is recommended for your use:

1. Insert the revised pages loosely in their proper location in the catalog.
2. Pull the locking trigger and lift the transfer bar with all pages down to the first loose revision sheet which has been inserted in its proper location.
3. Compare the revised (loose) page with the superseded page, noting changes and date.

NOTE: If you use the revised pages as part of your parts record-keeping system, note the changes in the revised (loose) page and post accordingly.

4. Remove superseded page.
5. Place revised page on post of transfer bar.
6. Replace transfer bar with all pages in place on bottom post.
7. Re-lock cover and your catalog is current and accurate.



MyMopar.com

## SPECIFYING INFORMATION

The following information is included in this Parts Catalog:

1. Part Type Code
2. Part Name
3. Part Number
4. Model Application
5. Quantity used per vehicle
6. Effective points of changes by vehicle serial number, engine number and body number.
7. Description and dimensions necessary for proper identification of parts.
8. Parts not previously listed in the Parts Catalog are designated by a double box (⊟) symbol preceding the part number.

## HOW TO LOCATE PARTS

The Parts Catalog is divided into Groups. A tab index is provided to separate the Groups. To locate a part by name, see Alphabetical Index. To locate a part by number, see Numerical Index.

In cases where only the location of the part on the vehicle is known, refer to Tab Index to locate the Group in which the part is located. Then refer to the illustrations which appear at the beginning of that Group for identification of the part by name and Part Type Code. Parts are listed in Part Type Code sequence within the Group and reference to the proper code will determine the part number.

## STANDARD PARTS

Standard Parts such as bolts, nuts, etc., are listed under the major parts which they attach and are not coded. Standard Parts listed as Major Parts, such as fuses, bulbs, and bearings in the 100,000 part number series are assigned a Part Type Code and coded within the group in which they are listed.

A comprehensive listing of the most commonly used Standard Parts available in carton quantities will be found under Group 18.

## ABBREVIATIONS

Abbreviations as used throughout this list are interpreted as follows:

| | |
|---|---|
| abs. | absorber |
| accel. | accelerator |
| acc. | accessory |
| adj. | adjusting-or-able-ment |
| alum. | aluminum |
| amp. | ampere |
| approx. | approximate-or-ly |
| arm. | armature |
| assy. | assembly |
| as req. | as required |
| att. | attaching |
| A. L. | AutoLite |
| auto. | automatic |
| aux. | auxiliary |
| bal. | balance |
| brg. | bearing |
| B. E. | black enamel |
| brkt. | bracket |
| br. | brass |
| bz. | bronze |
| blt. | built |
| bush. | bushing |
| ca. | cadmium |
| Cal. | California |
| canc. | cancelled |
| cp. | candlepower |
| carb. | carburetor |
| C. I. | cast iron |
| ctr. | center |
| C/L | Center Line |
| chamf. | chamfered |
| chr. | chromium |
| c/breaker | circuit breaker |
| c/nut | clinch nut |
| comb. | combination |
| compt. | compartment |
| comp. | complete or component |
| con. | connecting-tion-or |
| cont. | continued |
| cop. | copper |
| ck. | countersunk |
| cu. | cubic |
| cust. | custom |
| cyl. | cylinder |
| defl. | deflector |
| Det. | Detroit |
| diag. | diagonal |
| dia. | diameter |
| diaph. | diaphragm |
| diff. | differential |
| dir. | directional |
| dist. | distributor or distributing |
| div. | division |
| dom. | domestic |
| d/r shaft. | double rocker shaft |
| elec. | electric |
| elim. | eliminator |
| eng. | engine |



MyMopar.com

## ABBREVIATIONS - CONT'D

equip. . . . . equipment
etc. . . . . et cetera
Evans. . . . . Evansville
exh. . . . . exhaust
Exp. . . . . Export
ext. . . . . extension
F. . . . . Fahrenheit
fast. . . . . fastening, fastener
fil. hd. . . . . fillister head
fin. . . . . finish
fl. hd. . . . . flat head
ft. . . . . foot or feet
freq. . . . . frequency
frt. . . . . front
gen. . . . . generator
gov. . . . . governor
Gm. . . . . Gyromatic Transmission
h/brake . . . . . hand brake
hd. . . . . head
h/lamp . . . . . headlamp
hdls. . . . . headless
h/lining. . . . . headlining
htr. . . . . heater
hex. . . . . hexagon
hsg. . . . . housing
hydr. . . . . hydraulic
ign. . . . . ignition
in. . . . . inch
incl. . . . . inclusive or includes
ind. . . . . indicator
I. D. . . . . inside diameter
inst. . . . . instrument or instruction
ins. . . . . insulating-tion-or
inter. . . . . intermittently-mediate
j/block . . . . . junction block
kilo. . . . . kilometer
lea. . . . . leather
lt. . . . . left
LHD. . . . . Left Hand Drive
L. H. thd. . . . . Left Hand Thread
lgh. . . . . length
lic. . . . . license
l/washer . . . . . lockwasher
L. A. . . . . Los Angeles
L. C. . . . . low compression
lwr. . . . . lower
M. I. . . . . malleable iron
manif. . . . . manifold
man. . . . . manual
m/cyl. . . . . master cylinder
med. . . . . medium
M. P. H. . . . . miles per hour
mldg. . . . . moulding
mtg. . . . . mounting
neg. . . . . negative
ni. . . . . nickel
No. or # . . . . . number
oper. . . . . operating
opp. . . . . opposite
opt. . . . . optional
oz. . . . . ounce
O. D. . . . . outside diameter
O/S. . . . . oversize
pkg. . . . . package
pkd. . . . . parkerized
park. . . . . parking
p/lamp . . . . . parking lamp
part. . . . . partial or partition
P. or Pass. . . . . passenger
Penna. . . . . Pennsylvania
pil. . . . . pillar
pln. . . . . plain
p/washer . . . . . plainwasher
pltd. . . . . plated
pt. . . . . point
pos. . . . . positive
lbs. . . . . pounds
prop. . . . . propeller
qtr. . . . . quarter
rad. . . . . radiator
rr. . . . . rear
rec. . . . . receiver
refl. . . . . reflector
reg. . . . . regulator
reinf. . . . . reinforcement
rem. . . . . remote
repl. . . . . replacement
req. . . . . required
ret. . . . . retainer
R. P. M. . . . . revolutions per minute
rt. . . . . right
RHD. . . . . Right Hand Drive
R. H. thd. . . . . Right Hand Thread
rd. . . . . round
S. L. . . . . San Leandro
sec. . . . . section
s-fin. . . . . semi-finished
ser. . . . . serial or service
s. p. . . . . shakeproof
sig. . . . . signal
s/r shaft . . . . . single rocker shaft
speedo. . . . . speedometer
spec. equip. . . . . special equipment
sq. . . . . square
std. . . . . standard
S. . . . . steel
strg. . . . . steering
stght. . . . . straight
supt. . . . . support
synch. . . . . synchronizer
T/Lamp . . . . . tail lamp
T/Plate . . . . . tapping plate
T/Bolt . . . . . tee-bolt
term. . . . . terminal
T. . . . . teeth
thd. . . . . thread
thk. . . . . thick
Tor. Cv. . . . . Torque Converter
trans. . . . . transmission
tub. . . . . tubular
U/Drive . . . . . underdrive
U/S. . . . . undersize
univ. . . . . universal
U. J. . . . . universal joint
vac. . . . . vacuum
vent. . . . . ventilator-ing
vert. . . . . vertical
v. . . . . volt
vol. cont. . . . . volume control
w/strip . . . . . weatherstrip
whl. . . . . wheel
W. B. . . . . wheelbase
w/house . . . . . wheelhouse
w/lift. . . . . window lift
w/shield . . . . . windshield
w/ . . . . . with
w/o. . . . . without


MyMopar.com

## ABBREVIATIONS - CONT'D

PASSENGER CAR MODELS AND BODY STYLES

| | | | |
|---|---|---|---|
| 2 D. Cl. Sed. | 2 Door Club Sedan | Cust. | Custom |
| 3 Cp. | 3 Passenger Coupe | Est. Wgn. | Estate Wagon |
| 4 D. | 4 Door Sedan | Imp. | Imperial |
| 7 Sed. | 7 Passenger Sedan | Limo. | Limousine |
| 8 Sed. | 8 Passenger Sedan | Ply. | Plymouth |
| Do. | Dodge | Sed. | Sedan |
| De. | De Soto | Sp. | Special |
| Cp. | Coupe | Sp. Cl. Cp. | Special Club Coupe |
| Cv. Cp. | Convertible Coupe | Sp. 4 D. Sed. | Special 4 Door Sedan |
| Cl. Cp. | Club Coupe | Sta. Wgn. | Station Wagon |
| Chry. | Chrysler | Sub. | Suburban |

## PART TYPE CODE SYSTEM

To simplify the listing and locating of individual parts, a system of Part Type Codes is used in this Parts Catalog.

To illustrate, a Type of Part will be indicated as:

2-03-3 KNUCKLE, w/BUSHING

This code is broken down as follows:

2- Indicates the Major Group: "Group 2 -- Front Suspension"

-03 Indicates the Sub Group: "03 -- Steering Knuckle"

-3 Indicates the Code for the specific name of the part: "Knuckle, w/Bushing"

Part Type Code 2-03-3 will always appear as "KNUCKLE, w/BUSHING."

## VEHICLE SERIAL NUMBER PLATE

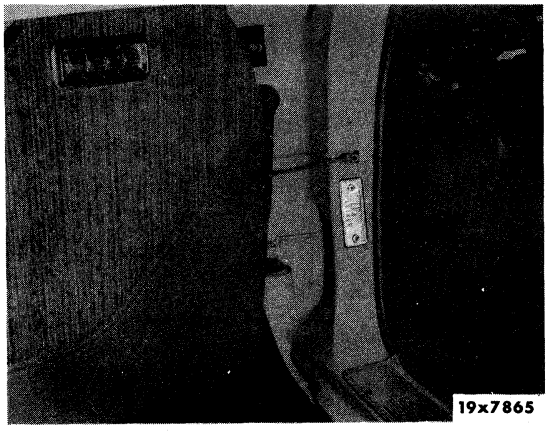


The Vehicle Serial Number Plate is located on the left front door hinge pillar.

If you are not certain of the correct part number when ordering parts for a specific vehicle, always specify the Vehicle Serial Number.



MyMopar.com

## ENGINE IDENTIFICATION

A method of Engine Serial Numbering is now in effect.

The 1st letter designates the Series

The two numbers following the letter will be Displacement

The last numerals designate Month and Date built

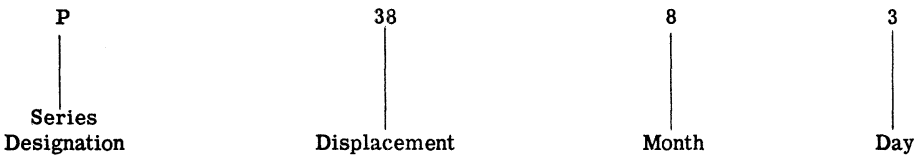


The example above is an engine No. as it would appear on Engine built August 3.

Listed below are Engine Numbers as they will appear assuming the production date is August 3.

| Type of Engine | Eng. No. |
|---|---|
| 6 Cyl. Pass. Car R "G" (224 cu. in.) - | P-22-8-3 |
| 8 Cyl. Pass. Car "B" (361 cu. in.) - | P-36-8-3 |
| 8 Cyl. Pass. Car "B" (383 cu. in.) - | P-38-8-3 |
| 8 Cyl. Pass. Car R "B" (383 cu. in.) - | PR-38-8-3 |
| 8 Cyl. Pass. Car R "B" (413 cu. in.) - | P-41-8-3 |
| 8 Cyl. Pass. Car (318 cu. in.) Not Affected. | |

## ENGINE NUMBER

LOCATING ENGINE NUMBER.

A boss is provided on all cylinder blocks upon which the Engine Number is stamped. For 6-cylinder engines, this is located on the left side of the block at the front and below the cylinder head. For 8-cylinder engines, it will be found on the top of the cylinder block behind the water pump, except on the Plymouth PP2, where it is located on the front of the block beneath the left-hand (driver's side) cylinder head.

IMPORTANT

MoPar Engines are supplied with blank engine number bosses only. Dealers are governed by state law on the application of engine numbers. In states where license fees are based on displacement or taxable horsepower, it will be necessary to change Vehicle Registration if the new MoPar Engine differs from the one which it replaces.

## ILLUSTRATIONS

Illustrations are located at the beginning of each group. Parts are identified on the illustration by Noun Name and Part Type Code. The Part Type Code designation will serve as an index to locate the listing of the Group.



MyMopar.com

## PAGE NUMBERING

Two-part page numbers are used throughout this catalog. The first part of the page designation indicates the major group or section. The second part indicates the actual page number in the group. For example:

1-1 indicates Group 1, Accessories, Page 1

2-1 indicates Group 2, Front Suspension, Page 1

In the maintenance of the Loose Leaf Parts Catalog Revision Service, it may become necessary to add information beyond the capacity of the page. In this event, an "A" page will be used. For example: If it becomes necessary, because of change, to add several part numbers to page 2-1 and space does not permit the addition, you will be given Page 2-1A. Page 2-1A should be filed immediately following page 2-1.

## PARTS PACKAGES

Service Parts Packages, containing all parts needed for a specific service operation, are listed in their respective groups with related parts. The listing will show adaptability and model application. Often it becomes necessary to know just what parts are contained in a Service Package. To determine this, refer to the Service Package Section. This section contains a secondary listing of all Service Packages in this Parts Catalog together with a list of every component part of each package. Service Packages in this section are listed numerically by Part Type Code.

## ALPHABETICAL INDEX

Reference to any part by sub-group name is provided in the Alphabetical Index. This index indicates the Part Type Code, by means of which the listing can be quickly located.

## NUMERICAL INDEX

Reference to any part by part number is provided in the Numerical Index. This index indicates the Part Type Code.



MyMopar.com

# SECTION 11

# ORDERING INFORMATION

# FOR REPLACEMENT PARTS

This publication contains parts information for 1960 model passenger cars. In the event replacement parts which are not listed are required, they may be ordered by description or part type code, giving the model or serial number of the vehicle to which they apply.

For ease in ordering and speed in shipping, MoPar replacement parts have been coded according to Stocking Point. These codes are explained in the MoPar Master Parts Price List.

Because items with certain codes are available at different Stocking Points, it is important that parts orders be developed separately for each Stocking Code ("P" or "D").

## HOW TO ORDER REPLACEMENT PARTS

1. Price Class "A", "B", and "S" Parts.

   a) These parts may be ordered separately or combined on the same order for a single shipment.

   b) The total value of the "Base Prices" for all the part numbers of the above parts classes that are included on the same order qualifies that order for any applicable Volume Discounts and/or Allowances off of such "Base Prices."

   c) "Base Prices" means the "Net Prices" published from time to time in column #6 of the Parts Price List and its supplements.

   d) All Mail Orders (Scheduled, Unscheduled, Emergency)

      (1) Use Standard Order Form 81-670-0139 exclusively for ordering "P" Section items from your usual source of MoPar parts.

      (2) Send all such orders by First Class Mail.

   e) Back Orders

      (1) Stock Orders (Scheduled, Unscheduled) - Back Orders from all classes of Stock Orders will be held at the Area Parts Plants.

      If the original orders so qualified, transportation will be prepaid on shipments of back orders. Otherwise, transportation charges will be F. O. B.

      The billing for all back order shipments will be subject to the prices in effect on the date of shipment as applied to the value basis at which the original order qualified.

      (2) Emergency Orders - Back Orders from Emergency Orders will be referred to Marysville for shipment or to the nearest Parts Plant where such items are available.

      All shipments will be F. O. B. shipping point, and billing will be subject to the prices in effect on the date of shipment.



MyMopar.com

## HOW TO ORDER REPLACEMENT PARTS - CONT'D

2. Price Class "X" and "Y" Parts.

a) Since these are inactive part numbers that seldom warrant stocking in the field, they usually are ordered only when needed for a particular service job.

b) Accordingly, speed in receiving, processing and shipping such orders is vital to you, to us, and to the public, and we have "tuned up" for this job independently of the processing for Stock Orders. In effect, every order will be handled as an Emergency Order.

c) An important part of this accelerated "line-up" is two separate self-identifying order forms. A supply of these forms has been sent to all Dealers and Parts Wholesalers, and will continue to be available gratis upon request.

d) Trim Order Form No. 81-690-0003

(1) This order form is intended to assist in the compilation of and facilitate the processing of Trim Orders. Please use this form in all cases as detailed on the form itself. By so doing, it will help you and us to avoid errors and to expedite shipment.

(2) Trim fabrics (body upholstery cloth, vinyl, etc.) are usually available by the yard or fraction thereof. When ordering fabric of this type, please furnish all information on Form No. 81-690-0003, plus the maximum length of material required. The length specified will be supplied in the bolt width of the material.

e) "D" Order Form D-16712

Large background letters unmistakably identify this form which is to be used SOLELY and EXCLUSIVELY for ordering part numbers with the "D" Stocking Point Codes (except Trim).

f) Send Orders For:

(1) Trim (including Telephone and Telegraphic Orders) - to Marysville Plant Only (see (7) below).

(2) Code "D" parts ordered separately (including Telephone and Telegraphic orders) -- to Marysville Plant only.

(3) DO NOT, however, combine "P" Section items and "D" Section items on the same order.

(4) Please send all mail orders to Chrysler Motors Corporation by First Class Mail.

(5) When sending orders for "D" Section items to the Marysville Parts Plant, address them to:

CHRYSLER MOTORS CORPORATION
P.O. BOX 722
PORT HURON, MICHIGAN

(6) Back Orders - Back Orders for "D" items will be billed at the prices in effect on the date of shipment.

If the original order so qualifies, transportation will be prepaid on shipments of Back Orders; otherwise, transportation will be F.O.B.

(7) Unlisted Items in the Parts Price List.

Inquiries concerning the availability, prices, etc., of part numbers that are not listed in the Parts Price List should be sent to:

CHRYSLER MOTORS CORPORATION
P.O. BOX 1718
DETROIT 31, MICHIGAN



MyMopar.com

## ORDERING BY TELEGRAM

3. Ordering by Telegram

a) When ordering by telegram, follow procedure as outlined above for ordering parts. Do not mix "P" classified parts with "D" classified parts on telegraphic orders.

b) Numbers in a telegram are charged for at the rate of one word for each five digits. Code words are charged for at the rate of one word for each five letters in the code word.

c) Use the Master Code Letters if your telegraphic order is for two or more part numbers of the same series.

EXAMPLE If your order is for part numbers 605 884, 635 885, 637 034, 667 423, and 669 328, it is counted as 10 words.

However, a savings can be effected by using the Master Code Letters and writing your order as follows:

K 05884, 35885, 37034, 67423, 69328

The count is 6 words -- a savings of 4 words.

For orders of a single part number, or several part numbers of different series, it is not necessary to use the Master Code Numeral.

EXAMPLE If your order is for part numbers 605 884, 706 124, 1718 124, and 1814 122, enter your order with all digits of the part number.

## MASTER CODE LETTERS

This Master Code will identify the first digit of a 6 digit part number or the first and second digits of a 7 digit part number. The remaining digits need not be coded. The following example illustrates use of the Master Code Letters.

| | | | | |
|---|---|---|---|---|
| B-100,000 | K- 600,000 | YB-1,100,000 | YK-1,600,000 | ZB-2,100,000 |
| C-200,000 | M- 700,000 | YC-1,200,000 | YM-1,700,000 | ZC-2,200,000 |
| E-300,000 | R- 800,000 | YE-1,300,000 | YR-1,800,000 | ZE-2,300,000 |
| F-400,000 | L- 900,000 | YF-1,400,000 | YL-1,900,000 | ZF-2,400,000 |
| J-500,000 | Y-1,000,000 | YJ-1,500,000 | Z-2,000,000 | ZJ-2,500,000 |

## UTILITY CODES

The Utility Codes, listed here, may be used in giving shipping instructions and for making inquiries about parts orders.

| | | | |
|---|---|---|---|
| FAABW | Ship to us by air express | FAAMH | Charge our account and ship by air express to |
| FABPN | Ship by air express, charge direct to | FACBY | Charge our account and ship air mail to |
| FABAW | Ship by air express C.O.D. to | FAAOJ | Charge our account and ship by express to |
| GAIMO | Ship to us by air freight | FAASM | Charge our account and ship by freight to |
| FACAX | Ship to us by air mail | FAAWR | Charge our account and ship by truck to |
| FACCZ | Ship by air mail C.O.D. to | FAANI | Charge our account and ship by parcel post to |
| FAAEZ | Ship to us by express | FACEB | Charge our account and ship by parcel post - special delivery to |
| FABWB | Ship by express, charge direct to | FAAYT | Charge our account and will be picked up by |
| FABEA | Ship by express C.O.D. to | FAAKE | We will call and pick up parts |
| FAAFA | Ship to us by freight | FABLH | We will call and pick up parts C.O.D. |
| FABIE | Ship by freight S.B.D.L. to | FABMI | When and how did (or will) you ship our order of (or number) |
| FAAJE | Ship to us by truck | FABSM | Cancel order for parts, our order number |
| FABVA | Ship by truck, charge direct to | FABOK | Cnacel order for parts, our telegram of |
| FAADY | Ship to us by parcel post | | |
| FABTU | Ship by parcel post, charge direct to | | |
| FABCY | Ship by parcel post C.O.D. to | | |
| FACDA | Ship to us by parcel post - special delivery | | |
| FACFC | Ship by parcel post - special delivery C.O.D. to | | |



MyMopar.com

## UTILITY CODES - CONT'D

The following example will illustrate use of both Master Code Letters and Utility Codes and the resulting savings when ordering parts by telegram.

FACDA two each 51019 70107 B 01263 01283 05721 10839 11698 E 50780 50791 56124 57802 57806
FAABW for car 10106982 one each K 02454 08804 33297 36846 39182 41684 FABMI 405

De-coded this telegram would read:

Ship to us by parcel post special delivery two each 51019, 70107, 101263, 101283, 105721, 110839, 111698, 350780, 350791, 356124, 357802, 357806. Ship to us by air express for car 10,106,982 one each 602454, 608804, 633297, 636846, 639182, 641684. When will you ship our order number 405?

This telegram, as coded, would be charged for as 33 words. Without coding the count would have been 64 words. To receive maximum benefit from coding, part numbers should be listed in numerical order. Obviously, care must be used when coding to insure that correct information has been furnished.


MyMopar.com

# AREA PARTS PLANTS

CENTER LINE, MICHIGAN

Mail Address:
Center Line Parts Plant
Chrysler Motors Corporation
7000 E. Eleven Mile Road
P.O. Box 779
Detroit 31, Michigan

Telephone - Detroit
JEfferson 9-3000

TWX NO. Center Line 625

Telegraph Address:
Center Line Parts Plant
Chrysler Motors Corporation
7000 E. Eleven Mile Road
Center Line, Michigan

Plant Manager - G. E. Walz
Telephone Extension - 591

Supervisor Parts Order - B. V. Miller
Telephone Extension - 491

SAN LEANDRO, CALIFORNIA

Mail Address:
San Leandro Parts Plant
Chrysler Motors Corporation
1950 Davis Street
San Leandro, California

Telephone - San Leandro
SWeetwood 8-6200

Telegraph Address:
Same as Mail Address

Plant Manager - J. C. Smith

Supervisor Parts Order - F. J. Lawrence

ATLANTA, GEORGIA

Mail Address:
Atlanta Parts Plant
Chrysler Motors Corporation
1150 Murphy Avenue, S.W.
P.O. Box 10786
Atlanta 10, Georgia

Telephone - Atlanta
PLaza 5-2531

Telegraph Address:
Same as Mail Address (Omit P.O. Box 10786)

Plant Manager - L. H. Koenig

Supervisor Parts Order - R. W. Thompson

MARYSVILLE, MICHIGAN

Mail Address:
Marysville Parts Plant
Chrysler Motors Corporation
P.O. Box 722
Port Huron, Michigan

Telephone - Port Huron
YUkon 2-8561

Telegraph Address:
Marysville Parts Plant
Chrysler Motors Corporation
Marysville, Michigan

Plant Manager - C. F. Malane
Telephone Extension - 221

Supervisor Parts Order - E. G. Millet
Telephone Extension - 267

NEWARK, DELAWARE

Mail Address:
Delaware Parts Plant
Chrysler Motors Corporation
South College Avenue
P.O. Box 120
Newark, Delaware

Telephone - Newark
ENdicott 8-2521

Telegraph Address:
Same as Mail Address (Omit P.O. Box 120)

Plant Manager - G. D. Tual

Supervisor Parts Order - W. M. Heitz

KANSAS CITY, KANSAS

Mail Address:
Kansas City Parts Plant
Chrysler Motors Corporation
Funston & Chrysler Roads
Kansas City 15, Kansas

Telephone - Kansas City, Kansas
FAirfax 1-3300

Telegraph Address:
Same as Mail Address

Plant Manager - W. F. Brady

Supervisor Parts Order - A. R. Wheat



MyMopar.com

## NOTES



MyMopar.com

| CODE | PART NAME AND PART NUMBER | CODE | PART NAME AND PART NUMBER |
|---|---|---|---|

# PARTS PACKAGES

1-01-1 GUARD PACKAGE,
FRONT BUMPER . . . . Part No. ⊟2196 495
Consists of:
2 - ---- --- Bolt
2 - ---- --- Lockwasher
2 - ---- --- Plain Washer
1 - ---- --- Tie Bar

1-02-1 COVER PACKAGE, DECK LID
TIRE . . . . . Part No. 2084 786
Consists of:
1 - 1963 478 Insert
1 - 1963 527 Medallion and Base
3 - 6006 264 Nut
2 - 6010 007 Nut and Washer
1 - 1963 461 Panel
1 - 1963 528 Retainer and Stud
1 - 1909 381 Welt

1-04-1 DIMMER PACKAGE,
AUTOMATIC HEADLAMP . . Part No. ⊟2197 571
Consists of:
1 - ---- --- Amplifier
1 - 2197 883 Base, Scanner
1 - 2197 884 Base, Scanner
1 - ---- --- Insulator, Wiring
1 - 1971 157 Scanner
1 - 9413 280 Screw, Mounting
2 - ---- --- Screw, Base Mounting
2 - ---- --- Screw, Base Mounting
2 - ---- --- Screw, Amplifier
1 - ---- --- Tool, Leveling
1 - ---- --- Wiring

1-04-16 TERMINAL and INSULATOR
PACKAGE, AUTOMATIC HEAD LAMP
DIMMER . . . . . Part No. 1843 226
Consists of:
10 - ---- --- Insulator
10 - ---- --- Terminal, Female
10 - ---- --- Terminal, Male

TERMINAL and INSULATOR PACKAGE,
AUTOMATIC HEADLAMP
DIMMER . . . . . Part No. 1843 227
Consists of:
10 - ---- --- Insulator
10 - ---- --- Terminal, Female

1-06-1 FLASHER PACKAGE,
EMERGENCY . . . . . Part No. 2097 277
Consists of:
1 - ---- --- Flasher

FLASHER PACKAGE,
EMERGENCY . . . . . Part No. 2097 278
Consists of:
1 - ---- --- Bracket
1 - ---- --- Nut/Washer
1 - ---- --- Screw, Bracket Mounting
1 - ---- --- Screw, Bracket Mounting
1 - ---- --- Wiring

1-09-1 LAMP PACKAGE, HAND BRAKE
SIGNAL . . . . . Part No. 1972 490
Consists of:
1 - ---- --- Bracket
1 - ---- --- Lamp
1 - 1971 931 Switch

LAMP PACKAGE, PARKING
BRAKE SIGNAL . . . . . Part No. *2096 797
Consists of:
1 - ---- --- Bracket
1 - 127 934 Bulb
1 - 2096 529 Lamp
1 - ---- --- Socket and Cable
1 - 1971 931 Switch

1-10-1 LAMP PACKAGE,
BACK-UP . . . . . Part No. *2097 140
Consists of:
2 - 151 576 Bulb
1 - 1302 807 Gasket
1 - ---- --- Reflector Rt.
1 - ---- --- Reflector Lt.
2 - 2096 938 Socket
1 - 1343 998 Switch
1 - ---- --- Wiring, Disconnect
1 - ---- --- Wiring, Lamp

LAMP PACKAGE,
BACK-UP . . . . . Part No. *2097 141
Consists of:
1 - 1676 629 Actuator
2 - 151 576 Bulb
2 - 1961 710 Gasket, Bracket
1 - ---- --- Reflector Rt.
1 - ---- --- Reflector Lt.
2 - ---- --- Rivet, Switch
2 - 2096 938 Socket
1 - 1972 052 Switch
1 - ---- --- Wiring, Disconnect
1 - ---- --- Wiring, Lamp

LAMP PACKAGE,
BACK-UP . . . . . Part No. *2097 142
Consists of:
2 - 151 576 Bulb
1 - 1302 807 Gasket, Switch
2 - 2096 141 Socket
1 1343 998 Switch
1 - ---- --- Wiring, Disconnect
1 - ---- --- Wiring, Lamp

LAMP PACKAGE,
BACK-UP . . . . . Part No. *2097 143
Consists of:
1 - 1676 629 Actuator
2 - 151 576 Bulb
2 - 2096 141 Socket
2 - ---- --- Rivet
1 - 1972 052 Switch
1 - ---- --- Wiring, Disconnect
1 - ---- --- Wiring, Lamp

LAMP PACKAGE,
BACK-UP . . . . . Part No. *2097 144
Consists of:
2 - 151 576 Bulb
1 - 1302 807 Gasket, Switch
2 - 1961 335 Lamp
2 - ---- --- Socket and Cable
1 - 1343 998 Switch
1 - ---- --- Wiring

★ Indicates use as required.
⊟ Indicates parts not listed in any previous parts book.
* Indicates change or addition.



MyMopar.com

Printed in U.S.A.
Prices and specifications subject to change without notice.
Dec. 9, 1960 Supersedes Oct. 1, 1959.

| CODE | PART NAME AND PART NUMBER |
|---|---|
| | LAMP PACKAGE, BACK-UP . . . . . Part No. *2097 145 |
| | Consists of: |
| | 1 - 1676 629 Actuator |
| | 2 - 151 576 Bulb |
| | 2 - 1961 335 Lamp |
| | 2 - ---- --- Rivet |
| | 2 - ---- --- Socket and Cable |
| | 1 - 1972 052 Switch |
| | 1 - ---- --- Wiring, Disconnect |
| | LAMP PACKAGE, BACK-UP . . . . . Part No. *2097 146 |
| | Consists of: |
| | 2 - 151 576 Bulb |
| | 1 - 1302 807 Gasket, Switch |
| | 2 - 1961 711 Lamp |
| | 2 - ---- --- Socket and Cable |
| | 1 - 1343 998 Switch |
| | 1 - ---- --- Wiring |
| | LAMP PACKAGE, BACK-UP . . . . . Part No. *2097 147 |
| | Consists of: |
| | 1 - 1676 629 Actuator |
| | 2 - 151 576 Bulb |
| | 2 - 1961 711 Lamp |
| | 2 - ---- --- Rivet |
| | 1 - 1972 052 Switch |
| | 2 - ---- --- Socket and Cable |
| | 1 - ---- --- Wiring Body Disconnect |
| 1-12-1 | LIGHTER PACKAGE, CIGAR . . . . . Part No. 2096 633 |
| | Consists of: |
| | 1 - ---- --- Bezel |
| | 1 - ---- --- Cable |
| | 1 - ---- --- Knob |
| | 1 - 2096 597 Shell |
| | 1 - 1770 756 Socket |
| | 1 - ---- --- Terminal |
| | LIGHTER PACKAGE, CIGAR . . . . . Part No. 2096 634 |
| | Consists of: |
| | 1 - 1887 787 Bezel |
| | 1 - ---- --- Cable |
| | 1 - ---- --- Knob |
| | 1 - 2096 599 Shell |
| | 1 - 1770 756 Socket |
| | 1 - ---- --- Terminal |
| 1-13-1 | LAMP PACKAGE, UNDERHOOD . . . . . Part No. 1972 690 |
| | Consists of: |
| | 1 - ---- --- Bracket |
| | 1 - 151 578 Bulb |
| | 1 - ---- --- Lamp |
| | 2 - ---- --- Screw |
| 1-14-4 | LAMP PACKAGE, MAP. . Part No. ⊟2096 595 |
| | Consists of: |
| | 1 - 151 578 Bulb |
| | 1 - 1887 955 Housing and Lens |
| | 2 - ---- --- Screw |
| | 1 - ---- --- Socket and Cables |
| 1-14-40 | LAMP PACKAGE, COURTESY . . . . . Part No. ⊟2096 386 |
| | Consists of: |
| | 2 - ---- --- Bracket |
| | 2 - 142 453 Bulb |
| | 2 - 161 895 Screw |

(Pkg. Cont'd)

| CODE | PART NAME AND PART NUMBER |
|---|---|
| (Cont'd) | |
| | 1 - ---- --- Socket, w/Wires |
| | 2 - ---- --- Speed Nut |
| | 2 - 1972 329 Switch |
| 1-19-1 | LIGHT PACKAGE, GLOVE COMPARTMENT . . . . Part No. 1972 480 |
| | Consists of: |
| | 1 - 131 282 Bulb |
| | 1 - ---- --- Switch and Wire |
| | LIGHT PACKAGE, GLOVE COMPARTMENT . . . . Part No. 2096 926 |
| | Consists of: |
| | 1 - 131 282 Bulb |
| | 1 - ---- --- Socket, w/Switch |
| 1-21-1 | CLOCK PACKAGE, INSTRUMENT PANEL . . . . . Part No. 2096 555 |
| | Consists of: |
| | 1 - ---- --- Cable |
| | 1 - ---- --- Clock |
| | 1 - ---- --- Nut |
| | 1 - ---- --- Plate |
| | CLOCK PACKAGE, INSTRUMENT PANEL . . . . . Part No. 2096 556 |
| | Consists of: |
| | 1 - ---- --- Clock |
| | CLOCK PACKAGE, INSTRUMENT PANEL . . . . . Part No. 2096 864 |
| | Consists of: |
| | 1 - 127 934 Bulb |
| | 1 - ---- --- Clock |
| | 1 - ---- --- Knob |
| | 1 - ---- --- Nut |
| | 1 - ---- --- Wiring, Extension |
| | 1 - ---- --- Wiring |
| | CLOCK PACKAGE, INSTRUMENT PANEL . . . . . Part No. 2097 300 |
| | Consists of: |
| | 1 - 1972 532 Bezel |
| | 1 - ---- --- Bezel |
| | 1 - 127 934 Bulb |
| | 1 - ---- --- Cable |
| | 1 - ---- --- Clock |
| | 1 - ---- --- Nut |
| | 2 - ---- --- Screw |
| | 1 - ---- --- Wiring |
| | 1 - ---- --- Wiring |
| 1-30-1 | LAMP PACKAGE, TRUNK COMPARTMENT . . . . Part No. 1972 689 |
| | Consists of: |
| | 1 - 151 578 Bulb |
| | 1 - ---- --- Lamp |
| | 1 - ---- --- Lockwasher |
| | 1 - 444 267 Screw |
| | 1 - 1972 426 Switch |
| 1-32-3 | VISOR PACKAGE, PADDED. . . . . Part No. ⊟2163 900 |
| | Consists of: |
| | 1 - ---- --- Visor |
| | VISOR PACKAGE, PADDED. . . . . Part No. ⊟2163 901 |
| | Consists of: |
| | 1 - ---- --- Visor |
| | VISOR PACKAGE, PADDED. . . . . Part No. ⊟2163 903 |
| | Consists of: |
| | 1 - ---- --- Visor |



MyMopar.com

| CODE | PART NAME AND PART NUMBER |
|---|---|
| 1-42-1 | BRAKE PACKAGE, POWER . . . . . Part No. 2084 809<br>Consists of:<br>1 - ---- --- Booster<br>1 - ---- --- Bracket<br>1 - ---- --- Fitting<br>1 - ---- --- Hose<br>1 - ---- --- Tube<br>1 - ---- --- Tube |
| 1-48-11 | HEATER CONTROL BEZEL, PACKAGE . . . . . Part No. 2084 054<br>Consists of:<br>1 - ---- --- Bezel<br>1 - ---- --- Spacer<br>2 - 1626 973 Spring/Nut |
| | FRESH AIR CONTROL BEZEL PACKAGE . . . . . Part No. 2084 055<br>Consists of:<br>1 - ---- --- Bezel and Studs<br>1 - ---- --- Spacer<br>2 - 1626 973 Spring/Nut |
| 1-48-137 | DEFROSTER PACKAGE, REAR WINDOW . . . . . Part No. *2097 416<br>Consists of:<br>1 - 1819 014 Bezel, Inlet<br>1 - ---- --- Blower and Mounting Plate<br>1 - ---- --- Duct and Seal<br>1 - 1971 091 Grille, Inlet<br>1 - 2096 950 Grille and Gasket, Outlet<br>2 - 121 752 Lockwasher, Ground<br>4 - ---- --- Nut, Bezel Mounting<br>1 - ---- --- Nut, Duct Mounting<br>2 - ---- --- Nut, Outlet Grille Mounting<br>1 - 168 904 Screw, Duct Mounting<br>2 - 161 798 Screw, Ground<br>1 - 2096 989 Tube, Duct<br>1 - ---- --- Washer, Duct Mounting |
| 1-48-299 | DEFROSTER SWITCH PACKAGE, REAR WINDOW . . . . . Part No. 2097 226<br>Consists of:<br>1 - ---- --- Bezel<br>1 - 1887 591 Knob and Set Screw<br>1 - 1887 603 Nut<br>1 - 1972 772 Switch |
| | DEFROSTER SWITCH PACKAGE, REAR WINDOW . . . . . Part No. 2097 227<br>Consists of:<br>1 - ---- --- Bezel<br>1 - 1887 860 Knob and Set Screw<br>1 - 1972 548 Nut<br>1 - 2096 376 Switch |
| | DEFROSTER SWITCH PACKAGE, REAR WINDOW . . . . . Part No. 2097 228<br>Consists of:<br>1 - ---- --- Bezel<br>1 - 2096 309 Knob and Set Screw<br>1 - 1972 548 Nut<br>1 - 2096 376 Switch |
| | DEFROSTER SWITCH PACKAGE, REAR WINDOW . . . . . Part No. 2097 229<br>Consists of:<br>1 - ---- --- Bezel<br>1 - 1887 909 Knob and Set Screw<br>1 - 1972 548 Nut<br>1 - 2096 375 Switch |
| | DEFROSTER SWITCH PACKAGE, REAR WINDOW . . . . . Part No. 2097 230<br>Consists of:<br>1 - 1886 930 Clip<br>1 - 1476 683 Fuse<br>1 - 1972 774 Switch |
| 1-49-10 | MOUNTING BRACKET PACKAGE, RECORD PLAYER. . . . . Part No. B2097 301<br>Consists of:<br>1 - ---- --- Bracket, Right<br>1 - ---- --- Bracket, Left<br>1 - ---- --- Bracket, Rear<br>5 - ---- --- Lockwasher, Mounting<br>3 - ---- --- Nut, Mounting<br>1 - ---- --- Nut, Mounting, Rear<br>4 - ---- --- Screw, Mounting<br>1 - ---- --- Screw, Mounting, Rear |
| | MOUNTING BRACKET PACKAGE, RECORD PLAYER. . . . . Part No. B2097 302<br>Consists of:<br>1 - ---- --- Bracket, Right<br>1 - ---- --- Bracket, Left<br>1 - ---- --- Bracket, Rear<br>5 - ---- --- Lockwasher, Mounting<br>1 - ---- --- Lockwasher, Mounting, Rear<br>1 - ---- --- Nut, Mounting<br>2 - ---- --- Screw, Mounting<br>2 - ---- --- Screw, Instrument Panel<br>1 - ---- --- Screw, Mounting, Rear |
| 1-50-1 | SAFETY SWITCH PACKAGE, ELECTRIC WINDOW LIFT . . . . . Part No. B2197 405<br>Consists of:<br>1 - ---- --- Connector<br>3 - 1264 933 Sleeve<br>1 - 2197 404 Switch<br>1 - 200 393 Terminal<br>2 - 200 001 Terminal<br>4 - 903 895 Terminal<br>1 - 1786 009 Wire, 48 in. long |
| 1-76-1 | REAR VIEW MIRROR PACKAGE, OUTSIDE . . . . . Part No. B2196 255<br>Consists of:<br>1 - ---- --- Anti-Squeak<br>1 - 1902 243 Mirror<br>2 - ---- --- Screw |
| 1-76-3 | MIRROR-MATIC PACKAGE, REAR VIEW, INSIDE . . Part No. *2161 079<br>Consists of:<br>1 - ---- --- Feed Cable<br>1 - ---- --- Mirror-Matic<br>1 - ---- --- Terminal |
| 1-82-2 | WASHER PACKAGE, WINDSHIELD . . . . . Part No. 2097 225<br>Consists of:<br>1 - ---- --- Bracket, Reservoir Mounting<br>1 - 1838 001 Cap<br>1 - 1971 869 Check Valve<br>1 - ---- --- Hose, Check Valve to Foot Pump<br>1 - ---- --- Hose, Check Valve to Reservoir<br>1 - ---- --- Hose, Check Valve to Tee<br>1 - ---- --- Hose, Tee to Right Nozzle<br>(Pkg. Cont'd) |

★ Indicates use as required.
B Indicates parts not listed in any previous parts book.
* Indicates change or addition.



MyMopar.com

| CODE | PART NAME AND PART NUMBER |
|---|---|

(Cont'd)

2 - ---- --- Housing and Nozzle
1 - ---- --- Hose, Tee to Left Nozzle
1 - 138 557 Lockwasher, Foot Pump Mounting
2 - ---- --- Lockwasher, Housing and Nozzle Mounting
1 - ---- --- Nut, Foot Pump Mounting
2 - ---- --- Nut, Housing and Nozzle Mounting
1 - 1887 147 Pump, Foot
1 - 1972 368 Reservoir
1 - 444 267 Screw, Check Valve Mounting
2 - 172 327 Screw, Reservoir Mounting
1 - 1571 028 Strainer
1 - 1523 160 Tee

1-87-2 RADIO SPEAKER PACKAGE, REAR SHELF . . . . . Part No. 1972 258
Consists of:
1 - 1819 014 Bezel
1 - 1971 091 Grille
4 - ---- --- Nut
1 - ---- --- Speaker w/Cover
1 - ---- --- Wiring

RADIO SPEAKER AND SWITCH PACKAGE, REAR SHELF . . . . . Part No. 1972 259
Consists of:
1 - 1819 014 Bezel
1 - ---- --- Cable
1 - ---- --- Cable
1 - 1971 091 Grille
1 - ---- --- Knob
4 - ---- --- Nut
1 - ---- --- Nut
1 - ---- --- Plate
1 - ---- --- Speaker w/Cover
1 - 1819 889 Switch

1-88-1 ANTENNA PACKAGE, RADIO . . . . . Part No. 1971 231
Consists of:
1 - 1971 241 Adapter
1 - 1971 242 Adapter
1 - ---- --- Body and Mast
1 - 1971 239 Collar
1 - ---- --- Cover
1 - ---- --- Gasket
1 - ---- --- Nut
1 - 1658 328 Nut
1 - 145 415 Screw

ANTENNA PACKAGE, RADIO . . . . . Part No. 1972 071
Consists of:
1 - 1972 061 Adapter, Lower
1 - 1972 062 Adapter, Upper
1 - ---- --- Antenna
2 - ---- --- Clip
1 - 1972 060 Collar
1 - 1689 253 Connector, "Y", w/Lead In Wire
1 - 1972 063 Gasket, Upper Adapter
1 - ---- --- Gasket, Dome Nut
1 - ---- --- Lock Nut
1 - 1972 066 Nut, Dome
1 - ---- --- Screw

(Pkg. Cont'd)

| CODE | PART NAME AND PART NUMBER |
|---|---|

(Cont'd)

1 - ---- --- Seal
1 - ---- --- Strap
1 - 1779 863 Switch
1 - ---- --- Washer
1 - ---- --- Wiring, Cowl
1 - ---- --- Wiring, Motor

ANTENNA PACKAGE, RADIO . . . . . Part No. 2096 204
Consists of:
2 - 1972 061 Adapter, Lower
2 - 1972 062 Adapter, Upper
1 - ---- --- Body, Mast and Shield
1 - ---- --- Body, Mast and Shield
1 - ---- --- Clamp
1 - ---- --- Clamp
4 - 639 853 Clip
2 - 1972 060 Collar
1 - 1779 072 Connector, "Y", w/Lead in Wire
2 - 1972 063 Gasket, Upper Adapter
2 - ---- --- Gasket, Dome Nut
2 - ---- --- Nut
2 - 1658 328 Nut
2 - ---- --- Screw

ANTENNA PACKAGE, RADIO . . . . . Part No. 2096 219
Consists of:
1 - 1972 061 Adapter, Lower
1 - 1972 062 Adapter, Upper
1 - ---- --- Body, Mast and Shield
1 - ---- --- Clamp
1 - 1972 060 Collar
1 - 1972 063 Gasket, Upper Adapter
1 - ---- --- Gasket, Dome Nut
1 - ---- --- Nut
1 - 1658 328 Nut
1 - ---- --- Screw

ANTENNA PACKAGE, RADIO . . . . . Part No. 2097 413
Consists of:
1 - 2097 397 Adapter, Upper
1 - 2097 398 Adapter, Lower
1 - ---- --- Body, Mast and Shield
4 - 639 853 Clip, Antenna Wire
1 - 2097 304 Collar, Grounding
1 - 2097 550 Extension, Antenna Lead -in
1 - ---- --- Gasket, Dome Nut
1 - 2097 405 Gasket, Upper Adapter
1 - ---- --- Screw, Strap to Floor Mounting
1 - ---- --- Strap and Clamp
1 - ---- --- Nut, Cap
1 - ---- --- Nut, Hex

1-88-180 SHIELD PACKAGE RADIO ANTENNA . . . . . Part No. 1971 232
Consists of:
3 - ---- --- Screw
1 - ---- --- Shield
1 - ---- --- Strap w/Clamp



MyMopar.com

| CODE | PART NAME AND PART NUMBER |
|---|---|
| 2-07-1 | END PACKAGE, TIE ROD INNER . . . . . Part No. 1818 999<br>Consists of:<br>1 - ---- --- Bolt, Tie Rod End Clamp<br>1 - ---- --- Clamp, Tie Rod End<br>1 - ---- --- End, Tie Rod Inner<br>1 - ---- --- Nipple, Lubricant<br>1 - ---- --- Nut, Tie Rod End<br>1 - ---- --- Nut, Tie Rod End Clamp<br>1 - 108 636 Pin, Tie Rod End Nut Cotter<br>END PACKAGE, TIE ROD INNER . . . . . Part No. 1881 820<br>Consists of:<br>1 - ---- --- Bolt, Tie Rod End Clamp<br>1 - ---- --- Clamp, Tie Rod End<br>1 - ---- --- End, Tie Rod Inner<br>1 - ---- --- Nipple, Lubricant<br>1 - ---- --- Nut, Tie Rod End<br>1 - ---- --- Nut, Tie Rod End Clamp<br>1 - 108 636 Pin, Tie Rod End Nut Cotter<br>1 - 1673 045 Seal, Tie Rod End Dust<br>END PACKAGE, TIE ROD INNER. . . . . Part No. 1881 821<br>Consists of:<br>1 - ---- --- Bolt, Tie Rod End Clamp<br>1 - ---- --- Clamp, Tie Rod End<br>1 - ---- --- End, Tie Rod Inner<br>1 - ---- --- Nipple, Lubricant<br>1 - ---- --- Nut, Tie Rod End<br>1 - ---- --- Nut, Tie Rod End Clamp<br>1 - 108 636 Pin, Tie Rod End Nut Cotter<br>1 - 1673 045 Seal, Tie Rod End Dust<br>END PACKAGE, TIE ROD OUTER . . . . . Part No. 2084 352<br>Consists of:<br>1 - ---- --- Bolt, Tie Rod End Clamp<br>1 - ---- --- Clamp, Tie Rod End<br>1 - ---- --- End, Tie Rod Outer<br>1 - ---- --- Nipple, Lubricant<br>1 - ---- --- Nut, Tie Rod End<br>1 - ---- --- Nut, Tie Rod End Clamp<br>1 - 108 636 Pin, Tie Rod End Nut Cotter<br>1 - 1735 470 Seal, Tie Rod End Dust<br>1 - ---- --- Spacer, Tie Rod End Ball<br>END PACKAGE, TIE ROD OUTER . . . . . Part No. 2084 353<br>Consists of:<br>1 - ---- --- Bolt, Tie Rod End Clamp<br>1 - ---- --- Clamp, Tie Rod End<br>1 - ---- --- End, Tie Rod Outer<br>1 - ---- --- Nipple, Lubricant<br>1 - ---- --- Nut, Tie Rod End<br>1 - ---- --- Nut, Tie Rod End Clamp<br>1 - 108 636 Pin, Tie Rod End Nut Cotter<br>1 - 1673 045 Seal, Tie Rod End Dust<br>1 - ---- --- Spacer, Tie Rod End Ball |
| 2-08-57 | BALL JOINT PACKAGE, FRONT SUSPENSION UPPER . Part No. 1843 245<br>Consists of:<br>1 - ---- --- Ball Joint, Assembly<br>1 - 128 025 Nut, Ball Joint Stud<br>(Pkg. Cont'd) |

| CODE | PART NAME AND PART NUMBER |
|---|---|
| (Cont'd) | 1 - ---- --- Pin, Ball Joint Stud Nut Cotter<br>1 - ---- --- Retainer, Ball Joint Outer Seal<br>1 - 1731 435 Seal, Ball Joint Inner<br>1 - ---- --- Seal, Ball Joint Outer<br>1 - 1672 960 Washer, Ball Joint Stud Nut<br>BALL JOINT PACKAGE, FRONT SUSPENSION UPPER . . . . . Part No. 2084 252<br>Consists of:<br>1 - ---- --- Ball Joint, Assembly<br>1 - 128 027 Nut, Ball Joint Stud<br>1 - ---- --- Pin, Ball Joint Stud Nut Cotter<br>1 - ---- --- Retainer, Ball Joint Outer Seal<br>1 - 1731 264 Seal, Ball Joint Inner<br>1 - 1734 266 Seal, Ball Joint Outer<br>1 - 1672 960 Washer, Ball Joint Stud Nut |
| 2-08-59 | BRACKET, CAM and BUSHING, PACKAGE, FRONT SUSPENSION UPPER CONTROL ARM SUPPORT . . . . . Part No. 1881 652<br>Consists of:<br>2 - ---- --- Bracket, Cam, Assembly<br>2 - 1825 317 Bushing, Arm<br>2 - ---- --- Cam, Bracket Slotted<br>2 - 1825 449 Nut, Bracket Cam<br>2 - ---- --- Washer, Bracket Cam Lock |
| 2-10-55 | BALL JOINT PACKAGE, FRONT SUSPENSION LOWER . Part No. 1843 247<br>Consists of:<br>1 - ---- --- Ball Joint, Assembly<br>1 - 128 027 Nut, Ball Joint Stud<br>1 - ---- --- Pin, Ball Joont Stud Nut Cotter<br>1 - 1825 009 Seal, Ball Joint<br>1 - 1672 960 Washer, Ball Joint Stud Nut<br>BALL JOINT PACKAGE, FRONT SUSPENSION LOWER . Part No. 2084 253<br>Consists of:<br>1 - ---- --- Ball Joint, Assembly<br>1 - ---- --- Nut, Ball Joint Stud<br>1 - 119 209 Pin, Ball Joint Stud Nut<br>1 - 1825 303 Seal, Ball Joint Cotter<br>1 - 1672 961 Washer, Ball Joint Stud Nut |
| 2-10-57 | BUSHING and RETAINER PACKAGE, FRONT SUSPENSION LOWER CONTROL ARM STRUT. Part No. 2084 045<br>Consists of:<br>1 - ---- --- Bushing, Control Arm Strut<br>1 - 1825 432 Nut, Control Arm Strut Bushing<br>2 - 1734 341 Retainer, Control Arm Strut Bushing<br>BUSHING and RETAINER PACKAGE, FRONT SUSPENSION LOWER CONTROL ARM STRUT . Part No. 2084 214<br>Consists of:<br>1 - ---- --- Bushing, Control Arm Strut<br>(Pkg. Cont'd) |

★ Indicates use as required.
⊟ Indicates parts not listed in any previous parts book.
* Indicates change or addition.



Printed in U.S.A.
Prices and specifications subject to change without notice.
Dec. 9, 1960 Supersedes April 20, 1960.

MyMopar.com

| CODE | PART NAME AND PART NUMBER |
|---|---|
| (Cont'd) | |
| | 1 - 1825 432 Nut, Control Arm Strut Bushing |
| | 2 - 1734 341 Retainer, Control Arm Strut Bushing |
| 2-10-61 | SHAFT and BUSHING PACKAGE, FRONT SUSPENSION LOWER CONTROL ARM . . . . Part No. 1881 647 |
| | Consists of: |
| | 1 - 1636 010 Bushing, Shaft |
| | 1 - ---- --- Nut, Bushing |
| | 1 - 128 213 Nut, Shaft |
| | 1 - 137 214 Pin, Arm |
| | 1 - 119 209 Pin, Bushing Nut Cotter |
| | 1 - ---- --- Shaft, Arm |
| | 1 - ---- --- Washer, Bushing |
| | 1 - ---- --- Washer, Shaft Nut |
| | SHAFT and BUSHING PACKAGE, FRONT SUSPENSION LOWER CONTROL ARM . . . . Part No. 1881 650 |
| | Consists of: |
| | 1 - 1636 017 Bushing, Shaft |
| | 1 - ---- --- Nut, Bushing |
| | 1 - ---- --- Nut, Shaft |
| | 1 - ---- --- Pin, Arm |
| | 1 - 119 209 Pin, Bushing |
| | 1 - ---- --- Shaft, Arm |
| | 1 - ---- --- Washer, Bushing |
| | 1 - ---- --- Washer, Shaft Nut |
| 2-14-1 | BOLT AND SWIVEL PACKAGE, TORSION BAR OR SPRING REAR END ANCHOR ADJUSTING . . . . . Part No. 2196 771 |
| | Consists of: |
| | 1 - ---- --- Bolt, Torsion Bar Anchor |
| | 1 - ---- --- Swivel, Torsion Bar Anchor |
| | BOLT AND SWIVEL PACKAGE, TORSION BAR OR SPRING REAR END ANCHOR ADJUSTING . . . . . Part No. 2196 772 |
| | Consists of: |
| | 1 - ---- --- Bolt, Torsion Bar Anchor |
| | 1 - ---- --- Swivel, Torsion Bar Anchor |
| | BOLT AND SWIVEL PACKAGE, TORSION BAR OR SPRING REAR END ANCHOR ADJUSTING . . . . . Part No. 2196 773 |
| | Consists of: |
| | 1 - ---- --- Bolt, Torsion Bar Anchor |
| | 1 - ---- --- Swivel, Torsion Bar Anchor |
| | BOLT AND SWIVEL PACKAGE, TORSION BAR OR SPRING REAR END ANCHOR ADJUSTING . . . . . Part No. 2196 774 |
| | Consists of: |
| | 1 - ---- --- Bolt, Torsion Bar Anchor |
| | 1 - ---- --- Swivel, Torsion Bar Anchor |
| 2-14-8 | ANCHOR PACKAGE, FRONT SUSPENSION TORSION BAR OR SPRING REAR END LEFT . . . . . Part No. 2084 019 |
| | Consists of: |
| | 1 - ---- --- Anchor, End |
| | 1 - ---- --- Bolt, End Anchor Adjusting |
| | 1 - 1639 171 Lock, End Anchor |
| | 1 - 1613 388 Seal, End Anchor |

(Pkg. Cont'd)

| CODE | PART NAME AND PART NUMBER |
|---|---|
| (Cont'd) | |
| | 1 - 1735 464 Seat, End Anchor Adjusting Bolt |
| | 1 - ---- --- Swivel, End Anchor Adjusting Bolt |
| | ANCHOR PACKAGE, FRONT SUSPENSION TORSION BAR OR SPRING REAR END RIGHT . . . . . Part No. 2084 020 |
| | Consists of: |
| | 1 - ---- --- Anchor, End |
| | 1 - ---- --- Bolt, End Anchor Adjusting |
| | 1 - 1639 171 Lock, End Anchor |
| | 1 - 1613 388 Seal, End Anchor |
| | 1 - 1735 464 Seat, End Anchor Adjusting Bolt |
| | 1 - ---- --- Swivel, End Anchor Adjusting Bolt |
| | ANCHOR PACKAGE, FRONT SUSPENSION TORSION BAR OR SPRING REAR END LEFT . . . . . Part No. 2084 021 |
| | Consists of: |
| | 1 - ---- --- Anchor, End |
| | 1 - ---- --- Bolt, End Anchor Adjusting |
| | 1 - 1639 171 Lock, End Anchor |
| | 1 - 1613 388 Seal, End Anchor |
| | 1 - 1735 464 Seat, End Anchor Adjusting Bolt |
| | 1 - ---- --- Swivel, End Anchor Adjusting Bolt |
| | ANCHOR PACKAGE, FRONT SUSPENSION TORSION BAR OR SPRING REAR END RIGHT . . . . . Part No. 2084 022 |
| | Consists of: |
| | 1 - ---- --- Anchor, End |
| | 1 - ---- --- Bolt, End Anchor Adjusting |
| | 1 - 1639 171 Lock, End Anchor |
| | 1 - 1613 388 Seal, End Anchor |
| | 1 - 1735 464 Seat, End Anchor Adjusting Bolt |
| | 1 - ---- --- Swivel, End Anchor Adjusting Bolt |
| | ANCHOR PACKAGE, FRONT SUSPENSION TORSION BAR OR SPRING REAR END LEFT . . . . . Part No. 2084 241 |
| | Consists of: |
| | 1 - ---- --- Anchor, End |
| | 1 - ---- --- Bolt, End Anchor Adjusting |
| | 1 - 1639 171 Lock, End Anchor |
| | 1 - 1613 388 Seal, End Anchor |
| | 1 - 1825 184 Seat, End Anchor Adjusting Bolt |
| | 1 - ---- --- Swivel, End Anchor Adjusting Bolt |
| | ANCHOR PACKAGE, FRONT SUSPENSION TORSION BAR OR SPRING REAR END RIGHT . . . . . Part No. 2084 242 |
| | Consists of: |
| | 1 - ---- --- Anchor, End |
| | 1 - ---- --- Bolt, End Anchor Adjusting |
| | 1 - 1639 171 Lock, End Anchor |

(Pkg. Cont'd)



MyMopar.com

| CODE | PART NAME AND PART NUMBER |
|---|---|
| (Cont'd) | 1 - 1613 388 Seal, End Anchor<br>1 - 1825 184 Seat, End Anchor Adjusting Bolt<br>1 - ---- --- Swivel, End Anchor Adjusting Bolt |
| | ANCHOR PACKAGE, FRONT SUSPENSION TORSION BAR OR SPRING REAR END RIGHT . . . . . Part No. 2196 750<br>Consists of:<br>1 - ---- --- Anchor, End<br>1 - ---- --- Bolt, End Anchor Adjusting<br>1 - 1639 171 Lock, End Anchor<br>1 - 1857 580 Plug, End Anchor<br>1 - 1613 388 Seal, End Anchor<br>1 - 1857 549 Seat, End Anchor Adjusting<br>1 - ---- --- Swivel, End Anchor Adjusting |
| | ANCHOR PACKAGE, FRONT SUSPENSION TORSION BAR OR SPRING REAR END LEFT . . . . . Part No. 2196 751<br>Consists of:<br>1 - ---- --- Anchor, End<br>1 - ---- --- Bolt, End Anchor Adjusting<br>1 - 1639 171 Lock, End Anchor<br>1 - 1857 580 Plug, End Anchor<br>1 - 1613 388 Seal, End Anchor<br>1 - 1857 549 Seat, End Anchor Adjusting<br>1 - ---- --- Swivel, End Anchor Adjusting |
| | ANCHOR PACKAGE, FRONT SUSPENSION TORSION BAR OR SPRING REAR END RIGHT . . . . . Part No. 2196 752<br>Consists of:<br>1 - ---- --- Anchor, End<br>1 - ---- --- Bolt, End Anchor Adjusting<br>1 - 1639 171 Lock, End Anchor<br>1 - 1825 582 Plug, End Anchor<br>1 - 1613 388 Seal, End Anchor<br>1 - 1857 549 Seat, End Anchor Adjusting<br>1 - ---- --- Swivel, End Anchor Adjusting |
| | ANCHOR PACKAGE, FRONT SUSPENSION TORSION BAR OR SPRING REAR END LEFT . . . . . Part No. 2196 753<br>Consists of:<br>1 - ---- --- Anchor, End<br>1 - ---- --- Bolt, End Anchor Adjusting<br>1 - 1639 171 Lock, End Anchor<br>1 - 1825 582 Plug, End Anchor<br>1 - 1613 388 Seal, End Anchor<br>1 - 1857 549 Seat, End Anchor Adjusting<br>1 - ---- --- Swivel, End Anchor Adjusting |
| | ANCHOR PACKAGE, FRONT SUSPENSION TORSION BAR OR SPRING REAR END RIGHT . . . . . Part No. 2196 754<br>Consists of:<br>1 - ---- --- Anchor, End<br>1 - ---- --- Bolt, End Anchor Adjusting<br>1 - 1639 171 Lock, End Anchor<br>1 - 1825 582 Plug, End Anchor<br>1 - 1613 388 Seal, End Anchor<br>1 - 1857 549 Seat, End Anchor Adjusting<br>1 - ---- --- Swivel, End Anchor Adjusting |
| | ANCHOR PACKAGE, FRONT SUSPENSION TORSION BAR OR SPRING REAR END LEFT . . . . . Part No. 2196 755<br>Consists of:<br>1 - ---- --- Anchor, End<br>1 - ---- --- Bolt, End Anchor Adjusting<br>1 - 1639 171 Lock, End Anchor<br>1 - 1825 582 Plug, End Anchor<br>1 - 1613 388 Seal, End Anchor<br>1 - 1857 549 Seat, End Anchor Adjusting<br>1 - ---- --- Swivel, End Anchor Adjusting |
| 2-15-4 | BUSHING PACKAGE, FRONT SUSPENSION UPPER AND LOWER CONTROL ARM Part No. 1881 653<br>Consists of:<br>1 - 1636 010 Bushing, Lower<br>2 - 1825 317 Bushing, Upper |
| | BUSHING PACKAGE, FRONT SUSPENSION UPPER AND LOWER CONTROL ARM Part No. 1881 654<br>Consists of:<br>1 - 1636 017 Bushing, Lower<br>2 - 1825 317 Bushing, Upper |
| 4-03-5 | LINING PACKAGE, PARKING BRAKE . . . . Part No. 1843 179<br>Consists of:<br>10 - ---- --- Lining<br>78 - ---- --- Rivets<br>30 - ---- --- Rivets |
| 4-03-6 | PACKAGE, PARKING BRAKE SHOE and LINING . . . . . Part No. 2084 230<br>Consists of:<br>2 - ---- --- Shoe and Lining Assy. |
| 5-03-1 | LINING PACKAGE, WHEEL BRAKE SHOE . Part No. 1843 028<br>Consists of:<br>8 - ---- --- Lining |
| | LINING PACKAGE, WHEEL BRAKE SHOE . Part No. 1879 396<br>Consists of:<br>8 - ---- --- Lining |
| | LINING PACKAGE, WHEEL BRAKE SHOE . Part No. 1879 398<br>Consists of:<br>4 - ---- --- Lining<br>4 - ---- --- Lining |
| | LINING PACKAGE, WHEEL BRAKE SHOE . Part No. 1879 399<br>Consists of:<br>8 - ---- --- Lining |
| | LINING PACKAGE, WHEEL BRAKE SHOE . Part No. 1879 401<br>Consists of:<br>8 - ---- --- Lining |
| | LINING PACKAGE, WHEEL BRAKE SHOE . Part No. 1879 404<br>Consists of:<br>4 - ---- --- Lining<br>4 - ---- --- Lining |



MyMopar.com

| CODE | PART NAME AND PART NUMBER |
|---|---|
| 5-39-1 | SERVICE PACKAGE,<br>MASTER CYLINDER . . Part No. 1603 235<br>Consists of:<br>1 - 1316 628 Boot<br>1 - ---- --- Cup, Piston<br>1 - 958 659 Cup, Secondary<br>1 - 1617 379 Seal, Valve<br>1 - 1318 446 Valve<br>1 - 857 443 Washer, Piston Cup<br>SERVICE PACKAGE,<br>MASTER CYLINDER . . Part No. 1879 303<br>Consists of:<br>1 - 1828 388 Boot<br>1 - ---- --- Cup, Piston<br>1 - 958 659 Cup, Secondary<br>1 - 1617 379 Seal, Valve<br>1 - 1318 446 Valve<br>1 - 857 443 Washer, Piston Cup<br>SERVICE PACKAGE,<br>MASTER CYLINDER . . Part No. 1881 645<br>Consists of:<br>1 - 1316 628 Boot<br>1 - ---- --- Cup, Piston<br>1 - 958 659 Cup, Secondary<br>1 - 1316 627 Collar, Boot<br>1 - 1828 659 Piston<br>1 - 1617 379 Seal, Valve<br>1 - 1738 268 Spring, Piston Return<br>1 - 1554 664 Stop<br>1 - 1318 446 Valve<br>1 - 857 443 Washer, Piston Cup |

| CODE | PART NAME AND PART NUMBER |
|---|---|
| | SERVICE PACKAGE,<br>MASTER CYLINDER . . Part No. 1881 987<br>Consists of:<br>1 - 1828 388 Boot<br>1 - ---- --- Cup, Piston<br>1 - 958 659 Cup, Secondary<br>1 - ---- --- Piston<br>1 - 1617 379 Seal, Valve<br>1 - 1318 446 Valve<br>1 - 857 443 Washer, Piston Cup |
| 5-63-1 | PACKAGE, FRONT WHEEL<br>CYLINDER SERVICE . . Part No. 2084 254<br>Consists of:<br>2 - 1674 080 Cup, Piston<br>2 - 1943 690 Boot<br>PACKAGE, REAR WHEEL<br>CYLINDER SERVICE . . Part No. 1818 639<br>Consists of:<br>2 - 1136 872 Boot<br>2 - 1674 080 Cup, Piston |
| 5-63-3 | PACKAGE, FRONT WHEEL<br>CYLINDER PISTON . . . Part No. 2084 255<br>Consists of:<br>2 - 1312 830 Piston<br>2 - 1614 894 Spring, Piston Return<br>2 - 1674 080 Cup, Piston<br>2 - 1674 081 Expander, Piston Cup<br>2 - 1943 690 Boot<br>PACKAGE, REAR WHEEL<br>CYLINDER PISTON . . . Part No. 2084 256<br>Consists of:<br>2 - 1136 872 Boot<br>2 - 1312 830 Piston<br>1 - 1633 106 Spring, Piston Return<br>2 - 1674 080 Cup, Piston<br>2 - 1674 081 Expander, Piston Cup |

## NOTES

★ Indicates use as required.
⊟ Indicates parts not listed in any previous parts book.
Dec. 9, 1960 Supersedes April 20, 1960.



Printed in U.S.A.
Prices and specifications subject to change without notice.
* Indicates change or addition.
MyMopar.com

| CODE | PART NAME AND PART NUMBER |
|---|---|
| 5-100-1 | PACKAGE,<br>POWER BRAKE REPAIR Part No. 1675 001<br>Consists of:<br>1 - 1674 949 Seal, Air Valve<br>1 - 1674 949 Seal, Vacuum Valve<br>1 - 1674 952 Valve, Vacuum<br>1 - 1674 957 "O" Ring, Housing to Guide<br>1 - 1674 972 Seal, Bearing to Sleeve<br>1 - 1674 974 "O" Ring, Bearing to Mounting Plate<br>1 - 1674 989 "O" Ring, Valve Operating Rod<br>1 - 1674 991 "O" Ring, Valve Housing to Cover |
| | PACKAGE,<br>POWER BRAKE REPAIR Part No. 1940 788<br>Consists of:<br>1 - 1940 790 Bearing, Piston Rod<br>1 - 1675 112 Diaphragm, Valve Applying<br>1 - 1675 123 Diaphragm, Poppet Valve Seat<br>1 - 1675 137 Gasket, Inspection Hole Screw<br>1 - 1675 124 Hose, Vacuum<br>1 - 1673 620 Retainer, Valve Stem Spring<br>2 - 1675 104 Ring, Valve Stem Snap<br>1 - 1940 787 Seal, Piston Rod<br>1 - 1675 128 Seal, Valve Stem<br>1 - 1739 853 Seal, Shell<br>1 - 1675 118 Seat, Poppet Valve<br>1 - 1675 099 Washer, Piston Rod |
| | PACKAGE,<br>POWER BRAKE REPAIR Part No. ⊟2084 916<br>Consists of:<br>1 - ---- --- Piston Assembly<br>1 - ---- --- Diaphragm and Pressure Plate<br>1 - ---- --- "O" Ring<br>1 - ---- --- "O" Ring<br>1 - ---- --- "O" Ring<br>2 - ---- --- Block, Vee<br>2 - ---- --- Block, Vee<br>1 - ---- --- Ring, Snap<br>1 - ---- --- Cup, Slave Cylinder<br>1 - ---- --- Diaphragm, Control Valve<br>1 - ---- --- Seal<br>1 - ---- --- Spring, Vacuum Valve Return<br>1 - ---- --- Spring<br>1 - ---- --- Spring<br>1 - ---- --- Nut<br>1 - ---- --- Washer, Slave Cylinder |
| | PACKAGE,<br>POWER BRAKE REPAIR Part No. ⊟2084 917<br>Consists of:<br>1 - ---- --- "O" Ring<br>1 - ---- --- "O" Ring<br>1 - ---- --- "O" Ring<br>2 - ---- --- Block, Vee<br>2 - ---- --- Block, Vee<br>1 - ---- --- Cap, Slave Cylinder<br>1 - ---- --- Diaphram, Control Plate<br>1 - ---- --- Seal<br>1 - ---- --- Gasket, Slave Cylinder<br>1 - ---- --- Nut<br>1 - ---- --- Washer, Slave Cylinder |
| 5-100-3 | PACKAGE, POWER BRAKE<br>CYLINDER SEAL . . . . Part No. 1940 787<br>Consists of:<br>1 - 1940 790 Bearing, Piston Rod<br>1 - ---- --- Seal, Piston Rod |
| 5-100-152 | PACKAGE, POWER BRAKE<br>PISTON PACKING. . . . Part No. 1820 003<br>Consists of:<br>1 - 1739 834 Packing, Piston<br>1 - 1739 835 Ring, Piston Packing<br>1 - 1675 013 Wick, Piston Packing |
| 6-17-3 | LEVER PACKAGE,<br>CLUTCH RELEASE . . . Part No. 1879 652<br>Consists of:<br>1 - ---- --- Lever, Release<br>1 - ---- --- Pin, Lever<br>1 - ---- --- Strut, Lever<br>1 - ---- --- Spring, Lever<br>1 - ---- --- Eyebolt, w/Nut |
| | LEVER PACKAGE,<br>CLUTCH RELEASE . . . Part No. ⊟1879 655<br>Consists of:<br>1 - ---- --- Lever, Release<br>1 - ---- --- Pin, Lever<br>1 - ---- --- Spring, Lever<br>1 - ---- --- Screw, Adjusting<br>1 - ---- --- Nut, Screw<br>1 - ---- --- Washer, Screw |
| | LEVER PACKAGE,<br>CLUTCH RELEASE . . . Part No. ⊟2084 250<br>Consists of:<br>1 - ---- --- Lever, Release<br>1 - ---- --- Pin, Lever<br>1 - ---- --- Strut, Lever<br>1 - ---- --- Spring, Lever<br>1 - ---- --- Eyebolt, w/Nut |
| 7-14-10 | PACKAGE, RADIATOR HOSE<br>CLAMP . . . . . Part No. 1450 499<br>Consists of:<br>50 - ---- --- Clamps, Small |
| | PACKAGE, RADIATOR HOSE<br>CLAMP . . . . . Part No. 1450 500<br>Consists of:<br>50 - ---- --- Clamps, Large |
| 7-42-1 | PACKAGE, WATER<br>PUMP . . . . . Part No. 1752 422<br>Consists of:<br>1 - ---- --- Pump<br>1 - 1676 031 Gasket |
| | PACKAGE, WATER<br>PUMP . . . . . Part No. 1879 526<br>Consists of:<br>1 - ---- --- Pump<br>1 - 1737 705 Gasket |
| | PACKAGE, WATER<br>PUMP . . . . . Part No. 1879 536<br>Consists of:<br>1 - ---- --- Pump<br>1 - 1737 705 Gasket |
| | PACKAGE, WATER<br>PUMP . . . . . Part No. ⊟2196 035<br>Consists of:<br>1 - ---- --- Pump<br>1 - 1947 521 Gasket |

★ Indicates use as required.
⊟ Indicates parts not listed in any previous parts book.



MyMopar.com

| CODE | PART NAME AND PART NUMBER |
|---|---|
| 7-42-4 | PACKAGE, WATER PUMP REPAIR . . . . . Part No. 1752 435<br>Consists of:<br>1 - 1618 645 Gasket, Body<br>1 - 1676 031 Gasket, Body<br>1 - 1635 783 Impeller<br>1 - 1674 679 Washer<br>1 - ---- --- Seal<br>1 - ---- --- Shaft<br>1 - ---- --- Thrower |
| | PACKAGE, WATER PUMP REPAIR . . . . . Part No. 1752 622<br>Consists of:<br>1 - 1673 782 Gasket, Body<br>1 - 1671 894 Gasket, Body<br>1 - 1737 705 Gasket, Body<br>1 - 1859 151 Impeller<br>1 - 1674 679 Washer<br>1 - ---- --- Seal<br>1 - ---- --- Shaft<br>1 - ---- --- Thrower |
| | PACKAGE, WATER PUMP REPAIR . . . . . Part No. 1843 447<br>Consists of:<br>1 - 1671 191 Gasket, Body<br>1 - 1673 782 Gasket, Body<br>1 - 1671 894 Gasket, Body<br>1 - 1737 705 Gasket, Body<br>1 - 1637 724 Impeller<br>1 - 1674 679 Washer<br>1 - ---- --- Seal<br>1 - ---- --- Shaft<br>1 - ---- --- Thrower |
| 7-46-1 | PACKAGE, WATER PUMP SEAL . . . . . Part No. 1243 631<br>Consists of:<br>1 - 600 811 Ring, Lock<br>1 - 1123 841 Washer, Grease Retainer<br>1 - 1674 679 Washer, Seal Retainer<br>1 - ---- --- Seal |
| 8-06-1 | LAMP PACKAGE, QUARTER PANEL ORNAMENT . . Part No. ⊟2084 441<br>Consists of:<br>1 - ---- --- Bracket<br>1 - ---- --- Gasket<br>1 - ---- --- Lens<br>2 - 271 472 Nut |
| 8-27-11 | GEAR and PIN PACKAGE, TACHOMETER DRIVE . Part No. ⊟2084 869<br>Consists of:<br>1 - ---- --- Gear<br>1 - ---- --- Pin |
| 8-27-18 | GEAR PACKAGE, TACHOMETER FOLLOWER . . . . . Part No. ⊟2084 870<br>Consists of:<br>1 - ---- --- Cover, Housing<br>1 - ---- --- Gear<br>1 - ---- --- Shaft, Drive<br>1 - ---- --- Washer, Thrust |
| 8-27-77 | SPRING and HINGE PACKAGE, DISTRIBUTOR CAP CLAMP . . . . . Part No. 1879 606<br>Consists of:<br>1 - ---- --- Spring, w/Hinge, Locating Clamp<br>1 - ---- --- Spring, w/Hinge, Clamp |
| | SPRING and HINGE PACKAGE, DISTRIBUTOR CAP CLAMP . . . . . Part No. 1881 756<br>Consists of:<br>2 - ---- --- Spring, w/Hinge, Clamp |
| 8-27-85 | CONTACT and SPRING PACKAGE, DISTRIBUTOR CAP . . . Part No. ⊟2084 655<br>Consists of:<br>1 - ---- --- Contact<br>1 - ---- --- Spring |
| 8-27-133 | BEARING PACKAGE, DISTRIBUTOR DRIVE SHAFT . . . . . Part No. 1879 596<br>Consists of:<br>1 - ---- --- Bearing, Bronze, Upper<br>1 - ---- --- Bearing, Bronze, Lower<br>1 - ---- --- Collar<br>1 - ---- --- Pin, Collar<br>1 - ---- --- Washer, Upper Thrust, Inner<br>1 - ---- --- Washer, Upper Thrust, Outer<br>1 - ---- --- Washer, Thrust, Lower |
| | BEARING and THRUST WASHER PACKAGE, DRIVE SHAFT . . . . . Part No. 1881 947<br>Consists of:<br>1 - ---- --- Bearing, Shaft, Lower<br>1 - ---- --- Bearing, Shaft, Upper<br>1 - ---- --- Collar<br>1 - 9414 181 Pin, Collar<br>1 - 1195 770 Washer, Upper Thrust Outer<br>1 - 1195 769 Washer, Upper Thrust Inner<br>1 - ---- --- Washer, Lower Thrust |
| | BEARING PACKAGE, DRIVE SHAFT . . . . . Part No. ⊟2084 867<br>Consists of:<br>2 - ---- --- Bearing, Bronze<br>1 - ---- --- Collar<br>1 - ---- --- Pin, Collar<br>2 - ---- --- Washer, Thrust |
| | BEARING PACKAGE, DRIVE SHAFT . . . . . Part No. 1881 753<br>Consists of:<br>2 - ---- --- Bearing, Bronze<br>1 - ---- --- Collar<br>1 - ---- --- Pin, Collar<br>1 - ---- --- Washer, Thrust, Lower<br>1 - ---- --- Washer, Upper Thrust, Inner<br>1 - ---- --- Washer, Upper Thrust, Outer |
| 8-27-137 | COLLAR and PIN PACKAGE, DRIVE SHAFT . . . . . Part No. ⊟2084 448<br>Consists of:<br>1 - ---- --- Collar<br>1 - 9414 181 Pin |
| 8-27-190 | CONDENSER and BRACKET PACKAGE . . . . . Part No. ⊟1818 757<br>Consists of:<br>1 - ---- --- Bracket<br>1 - ---- --- Condenser |
| 8-27-208 | BREAKER and GROUND LEAD PACKAGE, DISTRIBUTOR . . . . . Part No. 1881 768<br>Consists of:<br>1 - ---- --- Lead, Breaker Arm<br>1 - ---- --- Lead, Ground |

★ Indicates use as required.
⊟ Indicates parts not listed in any previous parts book.
October 1, 1959.



Printed in U.S.A.
Prices and specifications subject to change without notice.
MyMopar.com

| CODE | PART NAME AND PART NUMBER |
|---|---|
| 8-27-218 | STUD and MOUNTING PACKAGE, DISTRIBUTOR TERMINAL . . . . . Part No. 1881 751<br>Consists of:<br>1 - ---- --- Nut<br>1 - ---- --- Stud<br>1 - ---- --- Stud, Insulation<br>1 - ---- --- Stud, Insulation Bushing<br>1 - ---- --- Stud, Insulation Washer<br>1 - ---- --- Washer, Lock<br>1 - ---- --- Washer, Plain |
| 8-27-278 | GOVERNOR WEIGHT PACKAGE, DISTRIBUTOR . . . . . Part No. 1879 595<br>Consists of:<br>2 - ---- --- Weight<br>GOVERNOR WEIGHT PACKAGE, DISTRIBUTOR . . . . . Part No. 1881 746<br>Consists of:<br>2 - ---- --- Weight<br>GOVERNOR WEIGHT PACKAGE, DISTRIBUTOR . . . . . Part No. 1881 945<br>Consists of:<br>2 - ---- --- Weight |
| 8-27-297 | FELT and SNAP RING PACKAGE, DISTRIBUTOR CAM SLEEVE . . . . . Part No. 1879 607<br>Consists of:<br>1 - ---- --- Felt, Disc<br>1 - ---- --- Ring, Snap |
| 8-27-308 | VACUUM CHAMBER PACKAGE, DISTRIBUTOR . . . . . Part No. 1881 752<br>Consists of:<br>1 - ---- --- Chamber, Vacuum<br>1 - ---- --- Ring, Lock<br>1 - ---- --- Washer, Plain<br>VACUUM CHAMBER PACKAGE, DISTRIBUTOR . . . . . Part No. ⊟2084 868<br>Consists of:<br>1 - ---- --- Chamber, Vacuum<br>1 - ---- --- Ring, Lock<br>1 - ---- --- Washer, Plain<br>VACUUM CHAMBER PACKAGE, DISTRIBUTOR . . . . . Part No. ⊟2084 888<br>Consists of:<br>1 - ---- --- Chamber, Vacuum<br>1 - ---- --- Ring, Lock<br>1 - ---- --- Washer, Plain<br>VACUUM CHAMBER PACKAGE, DISTRIBUTOR . . . . . Part No. 1881 929<br>Consists of:<br>1 - ---- --- Chamber, Vacuum<br>1 - ---- --- Ring, Lock<br>1 - ---- --- Washer, Plain<br>VACUUM CHAMBER PACKAGE, DISTRIBUTOR . . . . . Part No. 1881 754<br>Consists of:<br>1 - ---- --- Chamber, Vacuum<br>1 - ---- --- Ring, Lock |
| 8-27-315 | PLUG and GASKET PACKAGE, DISTRIBUTOR VACUUM CHAMBER . . . . . Part No. 1879 597<br>Consists of:<br>1 - ---- --- Gasket<br>1 - ---- --- Plug |
| 8-27-316 | SPRING and WASHER PACKAGE, DISTRIBUTOR VACUUM CHAMBER . . . . . Part No. ⊟2084 083<br>Consists of:<br>1 - ---- --- Spring<br>2 - ---- --- Washer, .032<br>3 - ---- --- Washer, .010<br>2 - ---- --- Washer, .065<br>SPRING and WASHER PACKAGE, DISTRIBUTOR VACUUM CHAMBER . . . . . Part No. 1881 766<br>Consists of:<br>1 - ---- --- Spring<br>2 - ---- --- Washer, .032<br>3 - ---- --- Washer, .010<br>2 - ---- --- Washer, .065<br>SPRING and WASHER PACKAGE, DISTRIBUTOR VACUUM CHAMBER . . . . . Part No. 1881 747<br>Consists of:<br>1 - ---- --- Spring<br>2 - ---- --- Washer, .032<br>3 - ---- --- Washer, .010<br>2 - ---- --- Washer, .065<br>SPRING and WASHER PACKAGE, DISTRIBUTOR VACUUM CHAMBER . . . . . Part No. 1881 742<br>Consists of:<br>1 - ---- --- Spring<br>2 - ---- --- Washer, .032<br>3 - ---- --- Washer, .010<br>2 - ---- --- Washer, .065<br>SPRING and WASHER PACKAGE, DISTRIBUTOR VACUUM CHAMBER . . . . . Part No. 1881 737<br>Consists of:<br>1 - ---- --- Spring<br>2 - ---- --- Washer, .032<br>3 - ---- --- Washer, .010<br>2 - ---- --- Washer, .065<br>SPRING and WASHER PACKAGE, DISTRIBUTOR VACUUM CHAMBER . . . . . Part No. 1881 755<br>Consists of:<br>1 - ---- --- Spring<br>2 - ---- --- Washer, .032<br>3 - ---- --- Washer, .010<br>2 - ---- --- Washer, .065 |
| 8-29-13 | NUT and LOCKWASHER PACKAGE, ARM SHAFT Part No. 1881 722<br>Consists of:<br>1 - 40 654 Nut<br>1 - ---- --- Washer, Lock |
| 8-29-14 | STUD and MOUNTING PACKAGE, ARMATURE TERMINAL Part No. 1881 744<br>Consists of:<br>1 - 960 162 Bushing, Terminal Insulating<br>2 - 120 367 Nut, Terminal<br>1 - 1267 793 Stud, Terminal<br>1 - 671 477 Washer, Terminal Insulating<br>2 - 131 098 Washer, Terminal Lock<br>1 - 120 392 Washer, Terminal Plain<br>STUD and MOUNTING PACKAGE, ARMATURE TERMINAL Part No. 1881 740<br>Consists of:<br>2 - 120 367 Nut, Terminal<br>1 - ---- --- Stud, Terminal |

(Pkg. Cont'd)

★ Indicates use as required.
⊟ Indicates parts not listed in any previous parts book.



MyMopar.com

| CODE | PART NAME AND PART NUMBER |
|---|---|
| (Cont'd) | |
| | 1 - 1138 481 Washer, Terminal Insulating |
| | 2 - 131 098 Washer, Terminal Lock |
| | 1 - ---- --- Washer, Terminal Plain |
| 8-29-19 | ARM and SPRING PACKAGE, BRUSH. . . . . Part No. 1881 745 |
| | Consists of: |
| | 2 - 674 936 Arm |
| | 2 - 960 173 Spring |
| | ARM and SPRING PACKAGE, BRUSH. . . . . Part No. 1881 741 |
| | Consists of: |
| | 2 - 673 014 Arm |
| | 2 - 671 490 Spring |
| | ARM and SPRING PACKAGE, BRUSH. . . . . Part No. 1881 721 |
| | Consists of: |
| | 2 - 1627 277 Arm |
| | 2 - 1627 279 Spring |
| 8-29-41 | HOLDER and TERMINAL PACKAGE, BRUSH . . . Part No. 1881 720 |
| | Consists of: |
| | 1 - ---- --- Bushing, Insulating Brush Holder Rivet |
| | 1 - 1627 278 Bushing, Terminal Insulating |
| | 1 - 1881 720 Holder, Grounded Brush |
| | 1 - ---- --- Holder, w/Terminal, Insulating Brush |
| | 1 - ---- --- Insulator, Brush Holder |
| | 2 - 120 367 Nut, Terminal |
| | 2 - ---- --- Rivet, Grounded Brush Holder |
| | 1 - ---- --- Rivet, Insulating Brush Holder |
| | 2 - 131 098 Washer, Terminal Lock |
| | 1 - ---- --- Washer, Terminal Plain |
| | HOLDER and TERMINAL PACKAGE, BRUSH . . . Part No. ⊟2084 854 |
| | Consists of: |
| | 1 - ---- --- Bushing, Insulating Brush Holder Rivet |
| | 1 - ---- --- Bushing, Terminal Insulating |
| | 1 - ---- --- Holder, Grounded Brush |
| | 1 - ---- --- Holder, w/Terminal, Insulating Brush |
| | 1 - ---- --- Insulator, Brush Holder |
| | 2 - ---- --- Nut, Terminal |
| | 2 - ---- --- Rivet, Grounded Brush Holder |
| | 1 - ---- --- Rivet, Insulating Brush Holder |
| | 2 - ---- --- Washer, Terminal Lock |
| | 1 - ---- --- Washer, Terminal Plain |
| 8-29-193 | STUD and MOUNTING PACKAGE, FIELD TERMINAL . . . . . Part No. 1881 743 |
| | Consists of: |
| | 1 - 960 161 Bushing, Terminal Insulating |
| | 1 - ---- --- Insulation, Connection |
| | 1 - 1253 332 Insulation, Terminal Stud Inner |
| | 2 - 120 614 Nut, Terminal |
| | 1 - 953 732 Stud, Terminal |
| | 1 - 671 481 Washer, Terminal Insulating |
| | 2 - ---- --- Washer, Terminal Lock |
| | 1 - ---- --- Washer, Terminal Plain |
| | STUD and MOUNTING PACKAGE, FIELD TERMINAL . . . . . Part No. 1881 719 |
| | Consists of: |
| | 1 - 1253 346 Bushing, Terminal Insulating |
| | 2 - 120 614 Nut, Terminal |
| | 1 - 1253 348 Stud, Terminal |
| | 1 - 1253 344 Washer, Terminal Insulating |
| | 2 - ---- --- Washer, Terminal Lock |
| | 1 - 1253 345 Washer, Terminal Plain |
| | STUD PACKAGE, FIELD TERMINAL . . . . . Part No. ⊟2084 853 |
| | Consists of: |
| | 1 - ---- --- Bushing, Terminal Insulating |
| | 2 - ---- --- Nut, Terminal |
| | 1 - ---- --- Stud, Terminal |
| | 1 - ---- --- Washer, Terminal Insulating |
| | 2 - ---- --- Washer, Terminal Lock |
| | 1 - ---- --- Washer, Terminal Plain |
| 8-36-1 | CABLE SET, MOPAR IGNITION . . . . . Part No. ⊟2084 217 |
| | Consists of: |
| | ★ - ---- --- Cable |
| | 10 - 1658 838 Nipple, Distributor Terminal |
| | 1 - 1665 085 Sleeve, Coil Secondary Cable |
| | 10 - 1717 314 Terminal, Distributor |
| | CABLE SET, MOPAR IGNITION . . . . . Part No. ⊟2084 219 |
| | Consists of: |
| | ★ - ---- --- Cable |
| | 10 - 1658 838 Nipple, Distributor Terminal |
| | 1 - 1665 085 Sleeve, Coil Secondary Cable |
| | 10 - 1717 314 Terminal, Distributor |
| | CABLE and TERMINAL PACKAGE, RESISTOR IGNITION . . . . . Part No. ⊟2084 456 |
| | Consists of: |
| | 1 - ---- --- Cable |
| | 1 - 1658 838 Nipple |
| | 1 - 1717 314 Terminal |
| | CABLE SET, MOPAR IGNITION . . . . . Part No. ⊟2196 052 |
| | Consists of: |
| | ★ - ---- --- Cable |
| | 8 - 1658 838 Nipple, Distributor Terminal |
| | 1 - 1665 085 Sleeve, Coil Secondary Cable |
| | 8 - 1717 314 Terminal, Distributor |
| | CABLE and TERMINAL PACKAGE, RESISTOR IGNITION . . . . . Part No. ⊟2084 064 |
| | Consists of: |
| | 1 - ---- --- Cable |
| | 1 - 1658 838 Nipple |
| | 1 - 1717 314 Terminal |
| | CABLE and TERMINAL PACKAGE, RESISTOR IGNITION . . . . . Part No. ⊟2084 065 |
| | Consists of: |
| | 1 - ---- --- Cable |
| | 1 - 1658 838 Nipple |
| | 1 - 1717 314 Terminal |
| | CABLE and TERMINAL PACKAGE, RESISTOR IGNITION . . . . . Part No. ⊟2084 458 |
| | Consists of: |
| | 1 - ---- --- Cable |
| | 1 - 1658 838 Nipple |
| | 1 - 1717 314 Terminal |


MyMopar.com

| CODE | PART NAME AND PART NUMBER |
|---|---|
| 8-36-49 | CABLE PACKAGE, COIL SECONDARY . . . . . Part No. 2084 427<br>Consists of:<br>1 - ---- --- Cable, 15" long<br>2 - 1658 838 Nipple<br>2 - 1717 314 Terminal |
| 8-37-177 | HOUSING and LENS PACKAGE, INSTRUMENT CLUSTER Part No. 2084 072<br>Consists of:<br>1 - ---- --- Housing<br>1 - ---- --- Lens, Instrument Cluster<br>1 - ---- --- Lens, Hand Brake Signal Lamp<br>1 - ---- --- Retainer, Hand Brake Signal Lamp Socket |
| 8-50-103 | ARM PACKAGE, TURN SIGNAL SWITCH OPERATING . . . . . Part No. *2084 304<br>Consists of:<br>1 - ---- --- Arm<br>1 - ---- --- Pivot, Arm<br>1 - ---- --- Spring, Detent |
| 8-52-49 | FORK and PIN PACKAGE, SHIFTING . . . . . Part No. 2084 093<br>Consists of:<br>1 - ---- --- Fork, Shifting<br>1 - ---- --- Pin, Roll |
| 8-52-75 | YOKE AND ATTACHING PACKAGE, STARTER . Part No. 1881 726<br>Consists of:<br>1 - 1527 947 Clamp, Cover<br>1 - ---- --- Pin, Cotter<br>1 - ---- --- Pin, Link<br>1 - 1527 946 Pin, Yoke<br>1 - 1752 373 Yoke |
| 8-52-82 | STOP AND LOCK RING PACKAGE, STARTER PINION . . . . . Part No. 1881 727<br>Consists of:<br>1 - 1752 375 Ring<br>1 - 1752 376 Stop |
| 8-52-135 | BRUSH PACKAGE . . . . Part No. 2084 089<br>Consists of:<br>2 - ---- --- Brush |
| 8-52-140 | SPRING PACKAGE, BRUSH. . . . . Part No. 2084 095<br>Consists of:<br>4 - 636 841 Spring, Brush<br>SPRING PACKAGE, BRUSH. . . . . Part No. 2084 666<br>Consists of:<br>4 - ---- --- Spring |
| 8-52-150 | HOLDER PACKAGE, STARTER BRUSH . . . . Part No. 1879 611<br>Consists of:<br>2 - 1752 361 Holder, Grounded Brush<br>2 - 1752 360 Holder, Insulated Brush<br>2 - 1752 363 Pin<br>4 - ---- --- Screw, Brush<br>2 - 1752 362 Spring |
| 8-52-180 | WASHER PACKAGE, COMMUTATOR END THRUST . . . . . Part No. 1879 613<br>Consists of:<br>3 - 641 446 Washer, 1/32<br>2 - 1383 663 Washer, 1/16<br>2 - 672 641 Washer, 3/64<br>2 - ---- --- Washer, .080 |
| | WASHER PACKAGE, COMMUTATOR END and DRIVE END THRUST . . Part No. 1881 725<br>Consists of:<br>1 - 1369 645 Washer, Commutator End Thrust<br>2 - 641 446 Washer, Commutator End Thrust<br>2 - 672 641 Washer, Commutator End Thrust<br>1 - 1752 367 Washer, Drive End Thrust |
| 8-52-214 | FIELD SERIES and SHUNT COIL PACKAGE. . . . . Part No. 2084 088<br>Consists of:<br>1 - ---- --- Coil, Field Series<br>1 - ---- --- Coil, Field Shunt |
| 8-52-275 | STUD PACKAGE, STARTER TERMINAL . . . . . Part No. 2084 667<br>Consists of:<br>1 - ---- --- Bushing, Insulating<br>1 - ---- --- Stud, Terminal<br>1 - ---- --- Washer, Plain<br>1 - ---- --- Washer, Inner Insulating<br>1 - ---- --- Washer, Outer Insulating |
| 8-52-302 | CONNECTOR and GROMMET PACKAGE, STARTER SWITCH . . . . . Part No. 1881 724<br>Consists of:<br>1 - ---- --- Connector<br>1 - ---- --- Grommet |
| 8-52-311 | PLUNGER PACKAGE, STARTER . . . . . Part No. 1881 728<br>Consists of:<br>1 - ---- --- Gasket, Cover<br>1 - ---- --- Plunger |
| 8-52-341 | CONTACT and COVER GASKET PACKAGE, SOLENOID. . . . . Part No. 2084 091<br>Consists of:<br>1 - ---- --- Contact, Solenoid<br>1 - ---- --- Gasket, Cover<br>1 - ---- --- Spring, Return |
| 8-52-344 | COVER and GASKET PACKAGE, SOLENOID . Part No. 2084 090<br>Consists of:<br>1 - ---- --- Cover<br>1 - ---- --- Gasket, Cover<br>COVER PACKAGE, STARTER SOLENOID SWITCH . . . Part No. 1879 603<br>Consists of:<br>1 - ---- --- Cover<br>1 - ---- --- Gasket<br>1 - ---- --- Nut<br>1 - 120 614 Nut<br>1 - ---- --- Stud, Terminal<br>1 - 1527 971 Stud, Terminal<br>2 - ---- --- Washer, Stud<br>1 - ---- --- Washer, Stud Lock<br>1 - ---- --- Washer, Stud Lock<br>2 - ---- --- Washer, Stud |
| 8-52-354 | STUD PACKAGE, SOLENOID TERMINAL RELAY . . . Part No. 2084 094<br>Consists of:<br>1 - ---- --- Insulator, Relay Stud<br>1 - 120 622 Nut, Hex<br>1 - ---- --- Stud<br>1 - ---- --- Washer, Lock<br>1 - ---- --- Washer, Relay Stud Spacing |

★ Indicates use as required.
⊟ Indicates parts not listed in any previous parts book.
* Indicates change or addition.



MyMopar.com

Printed in U.S.A.
Prices and specifications subject to change without notice.
Dec. 9, 1960 Supersedes Oct. 1, 1959.

| CODE | PART NAME AND PART NUMBER |
|---|---|
| 8-53-265 | RHEOSTAT REPLACEMENT PACKAGE, HEADLAMP SWITCH . . . . . Part No. ⊟2275 230<br>Consists of:<br>1 - ---- --- Rheostat<br>1 - ---- --- Spring<br>RHEOSTAT REPLACEMENT PACKAGE, HEADLAMP SWITCH . . . . . Part No. ⊟2275 231<br>Consists of:<br>1 - ---- --- Rheostat<br>1 - ---- --- Spring<br>RHEOSTAT REPLACEMENT PACKAGE, HEADLAMP SWITCH . . . . . Part No. ⊟2275 234<br>Consists of:<br>1 - ---- --- Driver<br>1 - ---- --- Rheostat<br>1 - ---- --- Spring |
| 8-55-1 | LAMP and HOUSING PACKAGE, QUARTER PANEL TAIL, STOP and TURN SIGNAL Part No. 2084 067<br>Consists of:<br>1 - 1961 047 Gasket, Lamp Housing<br>1 - ---- --- Housing, Lamp<br>1 - ---- --- Lamp<br>3 - 6000 123 Nut, w/Retainer<br>3 - ---- --- Screw, Outer Bezel<br>3 - 9413 264 Screw, Lamp Housing to Quarter Panel<br>1 - ---- --- Wick, Felt<br>LAMP PACKAGE, TAIL, RIGHT . . . . . Part No. 2084 670<br>Consists of:<br>1 - ---- --- Lamp<br>1 - 1960 888 Lens, Lamp<br>2 - 9413 439 Screw, Lamp Lens Mounting<br>LAMP PACKAGE, TAIL, LEFT . . . . . Part No. 2084 671<br>Consists of:<br>1 - ---- --- Lamp<br>1 - 1960 889 Lens, Lamp<br>3 - 9413 439 Screw, Lamp Lens Mounting |
| 8-55-194 | LENS, INNER BEZEL and GASKET PACKAGE, QUARTER PANEL TAIL, STOP and TURN SIGNAL LAMP . . . . . Part No. 2084 066<br>Consists of:<br>1 - ---- --- Bezel<br>1 - 1961 048 Gasket<br>1 - ---- --- Lens |
| 8-55-219 | REFLECTOR PACKAGE, TAIL, STOP, TURN SIGNAL and BACK-UP LAMP . . . . . Part No. 1881 736<br>Consists of:<br>1 - ---- --- Gasket<br>1 - ---- --- Reflector<br>1 - ---- --- Retainer |
| 8-56-3 | LAMP AND GASKET PACKAGE, BACK-UP, RIGHT . . . . . Part No. ⊟2084 052<br>Consists of:<br>1 - 1961 256 Gasket, Bezel<br>1 - ---- --- Lamp<br>(Pkg. Cont'd) |

| CODE | PART NAME AND PART NUMBER |
|---|---|
| (Cont'd) | 2 - 1961 349 Screw, Lamp Attaching<br>2 - ---- --- Washer, Lamp Attaching Sealing<br>LAMP AND GASKET PACKAGE, BACK-UP, LEFT . . . . . Part No. ⊟2084 053<br>Consists of:<br>1 - 1961 256 Gasket, Bezel<br>1 - ---- --- Lamp<br>2 - 1961 349 Screw, Lamp Attaching<br>2 - ---- --- Washer, Lamp Attaching Sealing |
| 8-56-8 | LENS and INNER BEZEL PACKAGE, BACK-UP LAMP . . . . . Part No. 2084 262<br>Consists of:<br>1 - ---- --- Bezel, Lamp Lens, Inner<br>1 - 1961 203 Gasket, Lamp Lens<br>1 - ---- --- Lens, w/Reflector Button |
| 8-56-36 | BEZEL and GASKET PACKAGE, BACK-UP LAMP, RIGHT . . . . . Part No. ⊟2240 731<br>Consists of:<br>1 - ---- --- Bezel<br>1 - 1961 448 Gasket<br>BEZEL and GASKET PACKAGE, BACK-UP LAMP, LEFT . . . . . Part No. ⊟2240 732<br>Consists of:<br>1 - ---- --- Bezel<br>1 - 1961 448 Gasket |
| 8-57-54 | LENS and GASKET PACKAGE, LICENSE LAMP . . . . . Part No. 1879 566<br>Consists of:<br>1 - ---- --- Gasket<br>1 - ---- --- Lens |
| 9-01-5 | GASKET SET, ENGINE . . . . . Part No. 2196 045<br>Consists of:<br>1 - 1945 561 Gasket, Air Cleaner Cover<br>1 - 1947 797 Gasket, Air Cleaner to Carburetor<br>1 - 637 191 Gasket, Carburetor Flange<br>1 - 1947 554 Gasket, Chain Case Cover<br>1 - 1947 578 Gasket, Cylinder Head<br>1 - 2121 244 Gasket, Cylinder Head Cover<br>1 - 1947 671 Gasket, Cylinder Water Outlet Elbow<br>1 - 2073 792 Gasket, Exhaust Pipe Flange<br>1 - 1400 185 Gasket, Fuel Pump Flange<br>1 - ---- --- Gasket, Intake and Exhaust Manifold<br>1 - ---- --- Gasket, Oil Pan, Front<br>1 - Gasket, Oil Pan, Left<br>1 - ---- --- Gasket, Oil Pan, Rear<br>.1 - ---- --- Gasket, Oil Pan, Right<br>1 - 618 622 Gasket, Oil Pressure Relief Valve Cap<br>1 - 2121 404 Gasket, Oil Pump Body<br>1 - 1947 521 Gasket, Water Pump Body<br>1 - 1947 523 Gasket, Water Pump Body Intermediate Plate |


MyMopar.com

| CODE | PART NAME AND PART NUMBER |
|---|---|
| | GASKET SET, ENGINE Part No. 1879 701 |
| | Consists of: |
| | 1 - 1737 763 Gasket, Chain Case Cover |
| | 2 - 1851 579 Gasket, Cylinder Head |
| | 2 - 1821 440 Gasket, Cylinder Head Cover |
| | 1 - 50 082 Gasket, Cylinder Water Outlet Elbow |
| | 2 - 1855 029 Gasket, Exhaust Pipe Flange |
| | 2 - 1821 640 Gasket, Exhaust Pipe Flange |
| | 1 - 1400 185 Gasket, Fuel Pump Flange |
| | 1 - 1326 836 Gasket, Ignition Distributor |
| | 1 - 1737 709 Gasket, Intake Manifold |
| | 1 - 1737 770 Gasket, Oil Pan |
| | 1 - 618 622 Gasket, Oil Pressure Relief Valve Cap |
| | 1 - 1737 705 Gasket, Water Pump Body |
| | 2 - 1737 761 Gasket, Water Pump to Cylinder Block |
| | GASKET SET, ENGINE . Part No. 1879 702 |
| | Consists of: |
| | 1 - 1737 763 Gasket, Chain Case Cover |
| | 2 - 1851 579 Gasket, Cylinder Head |
| | 2 - 1821 440 Gasket, Cylinder Head Cover |
| | 1 - 50 082 Gasket, Cylinder Water Outlet Elbow |
| | 2 - 1821 640 Gasket, Exhaust Pipe Flange |
| | 2 - 1855 029 Gasket, Exhaust Pipe Flange |
| | 1 - 1400 185 Gasket, Fuel Pump Flange |
| | 1 - 1326 836 Gasket, Ignition Distributor |
| | 1 - 1851 664 Gasket, Intake Manifold |
| | 1 - 1737 770 Gasket, Oil Pan |
| | 1 - 618 622 Gasket, Oil Pressure Relief Valve Cap |
| | 1 - 1737 705 Gasket, Water Pump Body |
| | 2 - 1737 761 Gasket, Water Pump to Cylinder Block |
| 9-10-2 | OIL SEAL PACKAGE, CRANKSHAFT BEARING NO. 5 CAP . . Part No. 1326 091 |
| | Consists of: |
| | 1 - ---- --- Oil Seal, Left |
| | 1 - ---- --- Oil Seal, Right |
| 9-11-1 | OIL SEAL PACKAGE, CRANKSHAFT REAR BEARING . . . . Part No. 1326 093 |
| | Consists of: |
| | 2 - ---- --- Oil Seal, Bearing |
| | 1 - ---- --- Oil Seal, Bearing Cap, Left |
| | 1 - ---- --- Oil Seal, Bearing Cap, Right |
| | OIL SEAL PACKAGE, CRANKSHAFT REAR BEARING . . . . Part No. 2084 411 |
| | Consists of: |
| | 1 - ---- --- Gasket, Cap, Left |
| | 1 - ---- --- Gasket, Cap, Right |
| | 2 - ---- --- Oil Seal |
| | OIL SEAL PACKAGE, CRANKSHAFT REAR BEARING . . . . Part No. 1818 781 |
| | Consists of: |
| | 2 - ---- --- Oil Seal, Crankshaft Rear Bearing |
| | 2 - ---- --- Oil Seal, Crankshaft Rear Bearing Retainer |
| 9-39-1 | GASKET PACKAGE, VALVE GRIND . . . . . Part No. 2196 046 |
| | Consists of: |
| | 1 - 1947 578 Gasket, Cylinder Head |
| | 1 - 2121 244 Gasket, Cylinder Head Cover |
| | 1 - 2073 792 Gasket, Exhaust Pipe Flange |

| CODE | PART NAME AND PART NUMBER |
|---|---|
| | GASKET PACKAGE, VALVE GRIND . . . . . Part No. 2084 226 |
| | Consists of: |
| | 1 - 1947 354 Gasket, Cylinder Head |
| | 1 - 1827 403 Gasket, Cylinder Head Cover |
| | 2 - 1636 570 Gasket, Exhaust Pipe |
| | 2 - ---- --- Gasket, Intake Manifold |
| | 1 - ---- --- Gasket, Intake Manifold Front |
| | 1 - ---- --- Gasket, Intake Manifold Rear |
| 9-50-1 | GASKET SET, MANIFOLD . . . . . Part No. 2084 416 |
| | Consists of: |
| | 1 - ---- --- Gasket, Intake and Exhaust Manifold |
| | 1 - ---- --- Gasket, Intake to Exhaust Manifold |
| 10-07-2 | GASKET AND SEAL PACKAGE, OIL PUMP . . . . . Part No. 2084 355 |
| | Consists of: |
| | 1 - 1737 727 Gasket, Oil Pump Cover, Large |
| | 1 - ---- --- Gasket, Oil Pump Cover, Small |
| | 1 - ---- --- Gasket, Oil Pump Body |
| | 1 - 1855 328 Seal, Oil Pump Body |
| 10-07-3 | SHAFT and ROTOR PACKAGE, OIL PUMP DRIVE . . . Part No. 2084 354 |
| | Consists of: |
| | 1 - 1737 722 Rotor, Outer |
| | 1 - 1737 719 Shaft, Drive, Assembly |
| | SHAFT and ROTOR PACKAGE, OIL PUMP DRIVE . . . Part No. 2084 415 |
| | Consists of: |
| | 1 - ---- --- Rotor, Outer |
| | 1 - ---- --- Shaft, Drive, Assembly |
| 10-24-1 | GASKET PACKAGE, OIL PAN . . . . . Part No. 1879 520 |
| | Consists of: |
| | 2 - ---- --- Gasket, Oil Pan Side |
| | 2 - ---- --- Gasket, Oil Pan End |
| | GASKET PACKAGE, OIL PAN. . . . . Part No. ⊟2240 647 |
| | Consists of: |
| | 1 - ---- --- Gasket, Oil Pan Right |
| | 1 - ---- --- Gasket, Oil Pan Left |
| | 1 - ---- --- Gasket, Oil Pan Front |
| | 1 - ---- --- Gasket, Oil Pan Rear |
| 10-26-8 | CARTRIDGE, OIL FILTER Part No. 1634 447 |
| | Consists of: |
| | 1 - ---- --- Cartridge, Oil Filter |
| | 1 - ---- --- Gasket, Cover |
| | 1 - ---- --- Gasket, Retainer |
| 11-02-1 | CLAMP PACKAGE, FRONT MUFFLER SUPPORT . . . . . Part No. 1321 109 |
| | Consists of: |
| | 1 - 181 639 Bolt |
| | 1 - ---- --- Clamp |
| | 1 - 120 369 Nut |
| | 1 - 120 382 Washer, Lock |
| | CLAMP PACKAGE, INTERMEDIATE TAIL PIPE . . . . . Part No. 1843 008 |
| | Consists of: |
| | 2 - 120 376 Nut |
| | 1 - ---- --- Saddle |
| | 1 - ---- --- U-Bolt |
| | 2 - 120 214 Washer, Lock |



MyMopar.com

| CODE | PART NAME AND PART NUMBER |
|---|---|
| 11-08-1 | CLAMP PACKAGE,<br>EXHAUST PIPE . . . . . Part No. 1603 364<br>Consists of:<br>2 - 120 376 Nut<br>1 - ---- --- Saddle<br>1 - ---- --- U-Bolt<br>2 - 120 214 Washer, Lock<br>CLAMP PACKAGE,<br>EXHAUST PIPE . . . . . Part No. 1843 008<br>Consists of:<br>2 - 120 376 Nut<br>1 - ---- --- Saddle<br>1 - ---- --- U-Bolt<br>2 - 120 214 Washer, Lock<br>CLAMP PACKAGE,<br>EXHAUST PIPE . . . . . Part No. 1843 009<br>Consists of:<br>2 - 120 376 Nut<br>1 - ---- --- Saddle<br>1 - ---- --- U-Bolt<br>2 - 120 214 Washer, Lock<br>CLAMP PACKAGE,<br>EXHAUST PIPE . . . . . Part No. 1843 407<br>Consists of:<br>2 - 120 376 Nut<br>1 - ---- --- Saddle<br>1 - ---- --- U-Bolt<br>2 - 120 214 Washer, Lock |
| 11-09-1 | CLAMP PACKAGE,<br>TAIL PIPE . . . . . Part No. 1843 009<br>Consists of:<br>2 - 120 376 Nut<br>1 - ---- --- Saddle<br>1 - ---- --- U-Bolt<br>2 - 120 214 Washer, Lock |
| 11-10-1 | CLAMP PACKAGE, TAIL PIPE<br>SUPPORT . . . . . Part No. 1321 109<br>1 - 181 639 Bolt<br>1 - ---- --- Clamp<br>1 - 120 369 Nut<br>1 - 120 382 Washer, Lock<br>CLAMP PACKAGE,<br>TAIL PIPE SUPPORT . Part No. 1843 008<br>Consists of:<br>2 - 120 376 Nut<br>1 - ---- --- Saddle<br>1 - ---- --- U-Bolt<br>2 - 120 214 Washer, Lock<br>CLAMP PACKAGE,<br>TAIL PIPE SUPPORT . Part No. 1843 009<br>Consists of:<br>2 - 120 376 Nut<br>1 - ---- --- Saddle<br>1 - ---- --- U-Bolt<br>2 - 120 214 Washer, Lock<br>CLAMP PACKAGE,<br>TAIL PIPE SUPPORT . Part No. 1843 408<br>Consists of:<br>1 - 181 614 Bolt<br>1 - ---- --- Clamp<br>1 - 120 368 Nut<br>1 - 120 214 Washer, Lock<br>1 - 120 387 Washer, Plain |

| CODE | PART NAME AND PART NUMBER |
|---|---|
| 14-30-4 | REPAIR PACKAGE,<br>CARBURETOR . . . . . Part No. 2084 164<br>Consists of:<br>1 - ---- --- Gasket, Air Cleaner<br>1 - ---- --- Gasket, Body<br>1 - ---- --- Gasket, Body Flange<br>1 - ---- --- Gasket, Flange<br>1 - ---- --- Gasket, Step-Up Piston<br>1 - ---- --- Gasket, Venturi Cover<br>1 - ---- --- Gasket, Venturi Housing<br>2 - ---- --- Jet, Main Metering<br>1 - ---- --- Needle, w/Seat, Float<br>1 - ---- --- Plunger, w/Rod, Pump<br>1 - ---- --- Spring, Step-Up Piston<br>REPAIR PACKAGE,<br>CARBURETOR . . . . . Part No. 2084 176<br>Consists of:<br>1 - ---- --- Gasket, Air Cleaner<br>1 - ---- --- Gasket, Air Horn<br>1 - ---- --- Gasket, Flange<br>1 - ---- --- Gasket, Pump Jet Housing<br>2 - ---- --- Gasket, Primary Venturi Cluster<br>2 - ---- --- Gasket, Secondary Venturi Cluster<br>2 - ---- --- Jet, Main Metering<br>2 - ---- --- Needle, w/Seat, Float<br>1 - ---- --- Plunger, w/Rod, Pump<br>2 - ---- --- Rod, Step-Up<br>2 - ---- --- Spring, Vacuum Piston<br>REPAIR PACKAGE,<br>CARBURETOR . . . . . Part No. 2084 177<br>Consists of:<br>1 - ---- --- Gasket, Air Cleaner<br>1 - ---- --- Gasket, Air Horn<br>1 - ---- --- Gasket Flange<br>1 - ---- --- Gasket, Pump Jet Housing<br>2 - ---- --- Gasket, Primary Venturi Cluster<br>2 - ---- --- Gasket, Secondary Venturi Cluster<br>2 - ---- --- Jet, Primary Metering<br>2 - ---- --- Needle, w/Seat, Float<br>1 - ---- --- Plunger, w/Rod, Pump<br>2 - ---- --- Rod, Step-Up<br>2 - ---- --- Spring, Vacuum Piston<br>REPAIR PACKAGE,<br>CARBURETOR . . . . . Part No. 2084 178<br>Consists of:<br>1 - ---- --- Gasket, Air Cleaner<br>1 - ---- --- Gasket, Air Horn<br>1 - ---- --- Gasket, Flange<br>1 - ---- --- Gasket, Pump Jet Housing<br>2 - ---- --- Gasket, Primary Venturi Cluster<br>2 - ---- --- Gasket, Secondary Venturi Cluster<br>2 - ---- --- Jet, Primary Metering<br>2 - ---- --- Needle, w/Seat, Float<br>1 - ---- --- Plunger, w/Rod, Pump<br>2 - ---- --- Rod, Step-Up<br>2 - ---- --- Spring, Vacuum Piston |



MyMopar.com

| CODE | PART NAME AND PART NUMBER |
|---|---|

REPAIR PACKAGE,
CARBURETOR . . . . . Part No. 2084 187
Consists of:
1 - ---- --- Gasket, Air Cleaner
1 - ---- --- Gasket, Air Horn
1 - ---- --- Gasket, Flange
1 - ---- --- Gasket, Pump Jet Housing
2 - ---- --- Gasket, Primary Venturi Cluster
2 - ---- --- Gasket, Secondary Venturi Cluster
2 - ---- --- Jet, Primary Metering
2 - ---- --- Needle, w/Seat, Float
1 - ---- --- Plunger, w/Rod, Pump
2 - ---- --- Rod, Step-Up
2 - ---- --- Spring, Vacuum Piston

REPAIR PACKAGE,
CARBURETOR . . . . . Part No. 2084 188
Consists of:
1 - ---- --- Gasket, Air Cleaner
1 - ---- --- Gasket, Body
1 - ---- --- Gasket, Body Flange
1 - ---- --- Gasket, Flange
1 - ---- --- Gasket, Step-Up Piston
1 - ---- --- Gasket, Venturi Housing
1 - ---- --- Gasket, Venturi Cover
2 - ---- --- Jet, Main Metering
1 - ---- --- Needle, w/Seat, Float
1 - ---- --- Plunger, w/Rod, Pump
1 - ---- --- Spring, Step-Up Piston

REPAIR PACKAGE,
CARBURETOR . . . . Part No. 2084 189
Consists of:
1 - ---- --- Gasket, Air Cleaner
1 - ---- --- Gasket, Air Horn
1 - ---- --- Gasket, Flange
1 - ---- --- Gasket, Pump Jet Housing
2 - ---- --- Gasket, Primary Venturi Cluster
2 - ---- --- Gasket, Secondary Venturi Cluster
2 - ---- --- Needle, w/Seat, Float
1 - ---- --- Plunger, w/Rod, Pump
2 - ---- --- Rod, Primary Metering
2 - ---- --- Rod, Step-Up
2 - ---- --- Spring, Vacuum Piston

REPAIR PACKAGE,
CARBURETOR . . . . . Part No. 2084 190
Consists of:
1 - ---- --- Gasket, Air Cleaner
1 - ---- --- Gasket, Air Horn
1 - ---- --- Gasket, Flange
1 - ---- --- Gasket, Pump Jet Housing
2 - ---- --- Gasket, Primary Venturi Cluster
2 - ---- --- Gasket, Secondary Venturi Cluster
2 - ---- --- Needle, w/Seat, Float
1 - ---- --- Plunger, w/Rod, Pump
2 - ---- --- Rod, Primary Metering
2 - ---- --- Rod, Step-Up
2 - ---- --- Spring, Vacuum Piston

REPAIR PACKAGE,
CARBURETOR . . . . . Part No. 2084 196
Consists of:
1 - ---- --- Gasket, Air Cleaner
1 - ---- --- Gasket, Air Horn

(Pkg. Cont'd)

| CODE | PART NAME AND PART NUMBER |
|---|---|

(Cont'd)

1 - ---- --- Gasket, Flange
1 - ---- --- Gasket, Pump Jet Housing
2 - ---- --- Gasket, Primary Venturi Cluster
2 - ---- --- Gasket, Secondary Venturi Cluster
2 - ---- --- Needle, w/Seat, Float
1 - ---- --- Plunger, w/Rod, Pump
2 - ---- --- Rod, Primary Metering
2 - ---- --- Rod, Step-Up
2 - ---- --- Spring, Vacuum Piston

REPAIR PACKAGE,
CARBURETOR . . . . . Part No. 2084 199
Consists of:
1 - ---- --- Gasket, Air Cleaner
1 - ---- --- Gasket, Air Horn
1 - ---- --- Gasket, Flange
1 - ---- --- Gasket, Pump Jet Housing
2 - ---- --- Gasket, Primary Venturi Cluster
2 - ---- --- Gasket, Secondary Venturi Cluster
2 - ---- --- Needle, w/Seat, Float
1 - ---- --- Plunger, w/Rod, Pump
2 - ---- --- Rod, Primary Metering
2 - ---- --- Rod, Step-Up
2 - ---- --- Spring, Vacuum Piston

REPAIR PACKAGE,
CARBURETOR . . . . . Part No. 2084 710
Consists of:
2 - ---- --- Gasket, Fuel Level Check Valve
1 - ---- --- Gasket, Fuel Inlet Fitting
8 - ---- --- Gasket, Fuel Bowl Screw
1 - ---- --- Gasket, Power Valve
1 - ---- --- Gasket, Fuel Bowl
1 - ---- --- Gasket, Throttle Body
1 - ---- --- Gasket, Primary Metering Body
2 - ---- --- Gasket, Pump Discharge Nozzle Screw
1 - ---- --- Gasket, Secondary Metering Body Plate
1 - ---- --- Gasket, Secondary Metering Body
1 - ---- --- Gasket, Flange
1 - ---- --- Diaphragm
2 - ---- --- Jet, Main
2 - ---- --- Needle, Idle Adjusting
2 - ---- --- "O" Ring
2 - ---- --- "O" Ring, Balance Tube
2 - ---- --- "O" Ring, Fuel Valve Seat
3 - ---- --- Retainer, Choke Piston and Float Link
1 - ---- --- Retainer, Air Vent Valve
3 - ---- --- Retainer, Choke Rod
2 - ---- --- Retainer, Connecting Rod
2 - ---- --- Screw, Choke Plate
4 - ---- --- Screw, Throttle Plate
1 - ---- --- Screen, Fuel Inlet
2 - ---- --- Seal, Idle Needle
2 - ---- --- Valve, w/Seat, Fuel
1 - ---- --- Valve Pump Discharge Needle
1 - ---- --- Valve, Power



MyMopar.com

| CODE | PART NAME AND PART NUMBER |
|---|---|

REPAIR PACKAGE,
CARBURETOR . . . . . Part No. 2084 725
Consists of:
1 - ---- --- Ball, Pump Discharge Check Valve, 1/8" dia.
1 - ---- --- Ball, Pump Inlet Check Valve, 3/16" dia.
1 - ---- --- Cotter Pin, Choke Piston Link
1 - ---- --- Gasket, Air Horn
1 - ---- --- Gasket, Body
1 - ---- --- Gasket, Power By-Pass Jet
1 - ---- --- Gasket, Venturi Cluster
2 - ---- --- Jet, Main Metering
1 - ---- --- Jet, Power By-Pass
3 - ---- --- Plug, Drive, 1/8" dia.
2 - ---- --- Plug, Drive, 3/16" dia.
1 - ---- --- Pump
1 - ---- --- Valve, Idle Needle
1 - ---- --- Valve, w/Seat, Float Needle

REPAIR PACKAGE,
CARBURETOR . . . . . Part No. 2084 726
Consists of:
1 - ---- --- Ball, Pump Discharge Check Valve, 1/8" dia.
1 - ---- --- Ball, Pump Inlet Check Valve, 3/16" dia.
1 - ---- --- Cotter Pin, Fast Idle Rod
1 - ---- --- Cotter Pin, Pump Rod
1 - ---- --- Gasket, Air Horn
1 - ---- --- Gasket, Body
2 - ---- --- Gasket, Metering Jet Plug
1 - ---- --- Gasket, Power By-Pass Jet
1 - ---- --- Gasket, Pump Discharge Nozzle Screw
1 - ---- --- Gasket, Pump Discharge Nozzle
1 - ---- --- Jet, Power By-Pass
2 - ---- --- Jet, Main Metering
2 - ---- --- Plug
1 - ---- --- Pump
1 - ---- --- Retainer, Pump Link
1 - ---- --- Spring, Float Fulcrum Pin
1 - ---- --- Spring, Pump
2 - ---- --- Valve, Idle Needle
1 - ---- --- Valve, w/Seat, Float Needle

REPAIR PACKAGE,
CARBURETOR . . . . . Part No. 2084 727
Consists of:
1 - ---- --- Ball, Pump Discharge Check Valve, 1/8" dia.
1 - ---- --- Ball, Pump Inlet Check Valve, 3/16" dia.
1 - ---- --- Cotter Pin, Fast Idle Rod
1 - ---- --- Cotter Pin, Pump Rod
1 - ---- --- Gasket, Air Horn
1 - ---- --- Gasket, Body
2 - ---- --- Gasket, Metering Jet Plug
1 - ---- --- Gasket, Power By-Pass Jet
1 - ---- --- Gasket, Pump Discharge Nozzle
1 - ---- --- Gasket, Pump Discharge Nozzle Screw
1 - ---- --- Jet, Power By-Pass
2 - ---- --- Jet, Main Metering
2 - ---- --- Plug

(Pkg. Cont'd)

| CODE | PART NAME AND PART NUMBER |
|---|---|

(Cont'd)
1 - ---- --- Pump
1 - ---- --- Retainer, Pump Link
1 - ---- --- Spring, Float Fulcrum Pin
1 - ---- --- Spring, Pump
2 - ---- --- Valve, Idle Needle
1 - ---- --- Valve, w/Seat Float Needle

14-30-7 GASKET PACKAGE,
CARBURETOR . . . . . Part No. 1631 368
Consists of:
1 - ---- --- Gasket, Air Horn
1 - ---- --- Gasket, Float Needle Valve
1 - ---- --- Gasket, Body
2 - ---- --- Gasket, Metering Jet Plug
1 - ---- --- Gasket, Power By-Pass Jet
1 - ---- --- Gasket, Pump Discharge Nozzle
1 - ---- --- Gasket, Pump Discharge Nozzle Screw
1 - ---- --- Gasket, Choke

GASKET PACKAGE,
CARBURETOR . . . . Part No. 1826 511
Consists of:
1 - ---- --- Gasket, Body
1 - ---- --- Gasket, Body Flange
1 - ---- --- Gasket, Flange
2 - ---- --- Gasket, Main Metering Jet
1 - ---- --- Gasket, Float Needle Seat
1 - ---- --- Gasket, Step-Up Piston
1 - ---- --- Gasket, Venturi Cover
1 - ---- --- Gasket, Venturi Housing

GASKET PACKAGE,
CARBURETOR . . . . . Part No. 1826 552
Consists of:
1 - ---- --- Gasket, Air Horn
1 - ---- --- Gasket, Flange
2 - ---- --- Gasket, Primary Venturi Cluster
2 - ---- --- Gasket, Secondary Venturi Cluster
1 - ---- --- Gasket, Pump Jet Housing

GASKET PACKAGE,
CARBURETOR . . . . . Part No. 1826 554
Consists of:
1 - ---- --- Gasket, Air Horn
1 - ---- --- Gasket, Flange
2 - ---- --- Gasket, Primary Venturi Cluster
2 - ---- --- Gasket, Secondary Venturi Cluster
1 - ---- --- Gasket, Pump Jet Housing

GASKET PACKAGE,
CARBURETOR . . . . . Part No. 1826 561
Consists of:
1 - ---- --- Gasket, Air Cleaner
1 - ---- --- Gasket, Air Horn
1 - ---- --- Gasket, Flange
2 - ---- --- Gasket, Primary Venturi Cluster
2 - ---- --- Gasket, Secondary Venturi Cluster
1 - ---- --- Gasket, Pump Jet Housing



MyMopar.com

| CODE | PART NAME AND PART NUMBER |
|---|---|
| | GASKET PACKAGE, CARBURETOR . . . . . Part No. 1826 616 |
| | Consists of: |
| | 1 - ---- --- Gasket, Air Cleaner |
| | 1 - ---- --- Gasket, Air Horn |
| | 1 - ---- --- Gasket, Flange |
| | 2 - ---- --- Gasket, Primary Venturi Cluster |
| | 2 - ---- --- Gasket, Secondary Venturi Cluster |
| | 1 - ---- --- Gasket, Pump Jet Housing |
| | GASKET PACKAGE, CARBURETOR . . . . . Part No. 2084 192 |
| | Consists of: |
| | 1 - ---- --- Gasket, Air Cleaner |
| | 1 - ---- --- Gasket, Body |
| | 1 - ---- --- Gasket, Body Flange |
| | 1 - ---- --- Gasket, Flange |
| | 1 - ---- --- Gasket, Step-Up Piston |
| | 1 - ---- --- Gasket, Venturi Cover |
| | 1 - ---- --- Gasket, Venturi Housing |
| | GASKET PACKAGE, CARBURETOR . . . . . Part No. 2084 200 |
| | Consists of: |
| | 1 - ---- --- Gasket, Air Cleaner |
| | 1 - ---- --- Gasket, Air Horn |
| | 1 - ---- --- Gasket, Flange |
| | 2 - ---- --- Gasket, Primary Venturi Cluster |
| | 2 - ---- --- Gasket, Secondary Venturi Cluster |
| | 1 - ---- --- Gasket, Pump Jet Housing |
| | GASKET PACKAGE, CARBURETOR . . . . . Part No. 2084 711 |
| | Consists of: |
| | 2 - ---- --- Gasket, Fuel Level Check Plug |
| | 1 - ---- --- Gasket, Fuel Inlet Fitting |
| | 8 - ---- --- Gasket, Fuel Bowl Screw |
| | 1 - ---- --- Gasket, Power Valve |
| | 1 - ---- --- Gasket, Fuel Bowl |
| | 1 - ---- --- Gasket, Throttle Body |
| | 1 - ---- --- Gasket, Primary Metering Body |
| | 2 - ---- --- Gasket, Pump Discharge Nozzle Screw |
| | 1 - ---- --- Gasket, Secondary Metering Body |
| | 1 - ---- --- Gasket, Secondary Metering Body Plate |
| | 1 - ---- --- Gasket, Flange |
| | 2 - ---- --- Gasket, Fuel Valve Seat Lock Screw |
| | 2 - ---- --- "O" Ring |
| | 2 - ---- --- "O" Ring, Balance Tube |
| | 2 - ---- --- "O" Ring, Fuel Valve Seat |
| | 2 - ---- --- Seal, Idle Needle |
| 14-73-1 | PUMP PACKAGE, FUEL . . . . . Part No. 1843 400 |
| | Consists of: |
| | 1 - 1400 185 Gasket |
| | 1 - ---- --- Pump |
| | PUMP PACKAGE, FUEL . . . . . Part No. 1843 287 |
| | Consists of: |
| | 1 - 1400 185 Gasket |
| | 1 - ---- --- Pump |
| | PUMP PACKAGE, FUEL . . . . . Part No. 1879 296 |
| | Consists of: |
| | 1 - 1400 185 Gasket |
| | 1 - ---- --- Pump |
| | PUMP PACKAGE, FUEL . . . . . Part No. 2084 859 |
| | Consists of: |
| | 1 - 1400 185 Gasket |
| | 1 - ---- --- Pump |
| 14-86-35 | CAP PACKAGE, FUEL TANK FILLER TUBE . . . . . Part No. 2084 322 |
| | Consists of: |
| | 1 - ---- --- Bar |
| | 1 - ---- --- Cap |
| | 1 - ---- --- Nut |
| | 1 - ---- --- Washer |
| 16-03-1 | JOINT PACKAGE, UNIVERSAL, FRONT . . . . . Part No. 1603 398 |
| | Consists of: |
| | 1 - 579 445 Pin, Centering |
| | 1 - 602 820 Cover, Grease |
| | 2 - 629 768 Button, Centering |
| | 1 - 639 973 Spring |
| | 1 - 870 539 Clamp, Large |
| | 1 - 870 540 Clamp, Small |
| | 1 - ---- --- Cover |
| | 2 - 1550 466 Ball and Roller |
| | 2 - 605 004 Washer, Thrust |
| | 1 - 1616 185 Gasket, Cover |
| | JOINT PACKAGE, UNIVERSAL, REAR . . . . . Part No. 1752 624 |
| | Consists of: |
| | 1 - ---- --- Cross Assy. |
| | 4 - 858 006 Retainer, Roller and Bushing |
| | 4 - 1739 913 Roller and Bushing |
| | JOINT PACKAGE, UNIVERSAL, FRONT . . . . . Part No. 1752 680 |
| | Consists of: |
| | 1 - 1635 092 Cover, Grease |
| | 2 - 605 004 Washer, Thrust |
| | 1 - 1635 098 Gasket, Cover |
| | 1 - 870 540 Clamp, Small |
| | 1 - 1739 923 Pin, Centering |
| | 1 - 1532 943 Clamp, Large |
| | 2 - 1739 924 Button, Centering |
| | 1 - ---- --- Cover |
| | 2 - 1739 927 Ball and Roller |
| 16-07-4 | DUST COVER PACKAGE, UNIVERSAL JOINT . . . Part No. 1603 397 |
| | Consists of: |
| | 1 - ---- --- Cover, Dust |
| | 1 - 870 539 Clamp, Large |
| | 1 - 870 540 Clamp, Small |
| | DUST COVER PACKAGE, UNIVERSAL JOINT . . . Part No. 1450 448 |
| | Consists of: |
| | 1 - ---- --- Cover, Dust |
| | 1 - 1532 943 Clamp, Large |
| | 1 - 870 540 Clamp, Small |
| 17-11-1 | BUSHING PACKAGE, REAR SPRING SHACKLE Part No. 1450 089 |
| | Consists of: |
| | 4 - ---- --- Bushing |



MyMopar.com

| CODE | PART NAME AND PART NUMBER |
|---|---|
| | BUSHING PACKAGE, REAR SPRING . . . . . Part No. ⊟2196 011<br>Consists of:<br>4 - ---- --- Bushing |
| 17-16-1 | SHACKLE and BUSHING PACKAGE, REAR SPRING . . . . . Part No. 1450 087<br>Consists of:<br>4 - ---- --- Bushing<br>2 - ---- --- Nut<br>2 - ---- --- Shackle |
| | SHACKLE and BUSHING PACKAGE, REAR SPRING . . . . . Part No. 1450 961<br>Consists of:<br>4 - ---- --- Bushing<br>2 - ---- --- Nut<br>2 - ---- --- Shackle |
| | SHACKLE and BUSHING PACKAGE, REAR SPRING . . . . . Part No. 2084 236<br>Consists of:<br>4 - ---- --- Bushing, Shackle<br>1 - ---- --- Insert, Shackle Bushing<br>2 - ---- --- Nut, Bolt<br>1 - ---- --- Plate, Shackle, Outer<br>1 - ---- --- Shackle |
| | SHACKLE AND BUSHING PACKAGE, REAR SPRING . . . . . Part No. ⊟2196 009<br>Consists of:<br>4 - ---- --- Bushing<br>1 - ---- --- Insert, Bushing<br>2 - 120 369 Nut<br>1 - ---- --- Plate<br>1 - ---- --- Shackle, w/Bolt |
| | SHACKLE AND BUSHING PACKAGE, REAR SPRING . . . . . Part No. ⊟2196 010<br>Consists of:<br>4 - ---- --- Bushing<br>1 - ---- --- Plate<br>1 - ---- --- Shackle, w/Bolt |
| 17-23-3 | ABSORBER and BUSHING PACKAGE, REAR SHOCK. . . . . Part No. *2240 317<br>Consists of:<br>1 - ---- --- Absorber<br>2 - 1319 902 Bushing |
| | ABSORBER and BUSHING PACKAGE, REAR SHOCK. . . . . Part No. ⊟2240 358<br>Consists of:<br>1 - ---- --- Absorber<br>2 - 1319 902 Bushing |
| | ABSORBER and BUSHING PACKAGE, REAR SHOCK. . . . . Part No. ⊟2240 359<br>Consists of:<br>1 - ---- --- Absorber<br>2 - 1319 902 Bushing |
| | ABSORBER and BUSHING PACKAGE, REAR SHOCK. . . . . Part No. ⊟2240 360<br>Consists of:<br>1 - ---- --- Absorber<br>2 - 1319 902 Bushing |
| | ABSORBER and BUSHING PACKAGE, REAR SHOCK. . . . . Part No. ⊟2240 361<br>Consists of:<br>1 - ---- --- Absorber<br>2 - 1319 902 Bushing |
| | ABSORBER and BUSHING PACKAGE, REAR SHOCK. . . . . Part No. *2240 365<br>Consists of:<br>1 - ---- --- Absorber<br>2 - 1319 902 Bushing |
| | ABSORBER and BUSHING PACKAGE, FRONT SHOCK. . . . . Part No. *2240 316<br>Consists of:<br>1 - ---- --- Absorber<br>1 - 1635 588 Bushing, Lower Mounting<br>1 - 1614 385 Bushing, Upper Mounting |
| | ABSORBER and BUSHING PACKAGE, FRONT SHOCK. . . . . Part No. ⊟2240 353<br>Consists of:<br>1 - ---- --- Absorber<br>1 - 1635 588 Bushing, Lower Mounting<br>1 - 1614 385 Bushing, Upper Mounting |
| | ABSORBER and BUSHING PACKAGE, FRONT SHOCK. . . . . Part No. ⊟2240 355<br>Consists of:<br>1 - ---- --- Absorber<br>1 - 1635 588 Bushing, Lower Mounting<br>1 - 1614 385 Bushing, Upper Mounting |
| | ABSORBER and BUSHING PACKAGE, FRONT SHOCK. . . . . Part No. ⊟2240 356<br>Consists of:<br>1 - ---- --- Absorber<br>1 - 1635 588 Bushing, Lower Mounting<br>1 - 1614 385 Bushing, Upper Mounting |
| | ABSORBER and BUSHING PACKAGE, FRONT SHOCK. . . . . Part No. ⊟2240 362<br>Consists of:<br>1 - ---- --- Absorber<br>1 - 1635 588 Bushing, Lower Mounting<br>1 - 1614 385 Bushing, Upper Mounting |
| | ABSORBER and BUSHING PACKAGE, FRONT SHOCK. . . . . Part No. *2240 364<br>Consists of:<br>1 - ---- --- Absorber<br>1 - 1635 588 Bushing, Lower Mounting<br>1 - 1614 385 Bushing, Upper Mounting |
| 19-01-3 | OVERHAUL PACKAGE, STEERING GEAR . . . . Page No. 2084 580<br>Consists of:<br>1 - 2123 169 Bearing, Shaft Housing Lower<br>1 - 2123 170 Bearing, Shaft Housing Upper<br>2 - 640 086 Cage, w/Roller, Worm Thrust Bearing<br>1 - 376 751 Cup, Worm Upper Thrust Bearing<br>1 - 637 539 Cup, Worm Lower Thrust Bearing<br>(Pkg. Cont'd) |



MyMopar.com

| CODE | PART NAME AND PART NUMBER |
|---|---|
| (Cont'd) | |
| | 1 - 1738 206 Gasket, Shaft Cover |
| | 1 - 661 117 Seal, Column Jacket Oil |
| | 1 - 1730 985 Seal, Shaft Oil |
| | 1 - 1829 134 Seal, Tube Oil |
| | 10 - 1123 313 Shim, Housing Cover |
| | OVERHAUL PACKAGE, STEERING GEAR . . . . Part No. *2196 033 |
| | Consists of: |
| | 2 - 2072 038 Bearing, Shaft |
| | 2 - 2072 060 Bearing, Worm Thrust |
| | 2 - 2207 835 Bushing, Jacket to Shaft Seal |
| | 2 - 2072 062 Cup, Worm Thrust Bearing |
| | 1 - 2072 048 Gasket, Shaft Cover |
| | 1 - 2073 675 Seal, Column Jacket to Shaft |
| | 1 - 2072 056 Seal, Shaft |
| | 1 - 2072 055 Seal, Worm Shaft |
| | 1 - 2072 051 Shim, Shaft Adjusting Screw |
| | 1 - 2072 052 Shim, Shaft Adjusting Screw |
| | 1 - 2072 053 Shim, Shaft Adjusting Screw |
| | 1 - 2072 054 Shim, Shaft Adjusting Screw |
| | OVERHAUL PACKAGE, STEERING GEAR . . . . Part No. ⊟2196 995 |
| | Consists of: |
| | 1 - 2123 169 Bearing, Shaft Housing, Lower |
| | 1 - 2123 170 Bearing, Shaft Housing, Upper |
| | 2 - 2201 624 Bushing, Column Jacket Seal |
| | 2 - 640 086 Cage and Roller, Worm Thrust Bearing |
| | 1 - 637 539 Cup, Worm Lower Thrust Bearing |
| | 1 - 376 751 Cup, Worm Upper Thrust Bearing |
| | 1 - 1738 206 Gasket, Shaft Cover |
| | 1 - 2201 234 Seal, Column Jacket Oil |
| | 1 - 1730 985 Seal, Shaft Oil |
| | 1 - 2200 730 Seal, Worm Shaft Oil |
| | 10 - 1123 313 Shim, Housing Cover |
| 19-01-4 | "O" RING and SEAL PACKAGE, POWER STEERING GEAR . . . . . Part No. 2084 839 |
| | Consists of: |
| | 1 - ---- --- Gasket, Valve Housing Plug |
| | 1 - 1733 602 "O" Ring, Column Support |
| | 2 - 1733 562 "O" Ring, Cylinder Head |
| | 1 - 1486 205 "O" Ring, Cylinder Head Ferrule |
| | 1 - 1823 150 "O" Ring, Housing |
| | 2 - 1556 385 "O" Ring, Housing Port |
| | 1 - 1536 268 "O" Ring, Pressure Control Valve |
| | 1 - 1822 149 "O" Ring, Reaction, Lower |
| | 1 - 1733 615 "O" Ring, Shaft Cover |
| | 1 - 1733 612 "O" Ring, Valve Housing |
| | 1 - 1822 151 Seal, Reaction, Upper |
| | 1 - 1822 203 Seal, Shaft Adjusting Screw |
| | 1 - 1730 985 Seal, Shaft Oil |
| | 1 - 1822 324 Seal, Worm Shaft, Inner |
| | "O" RING and SEAL PACKAGE, POWER STEERING GEAR . . . . Part No. *2196 032 |
| | Consists of: |
| | 1 - ---- --- Gasket, Valve Housing Plug |
| | 1 - 1733 602 "O" Ring, Column Support |
| | 2 - 1733 562 "O" Ring, Cylinder Head |

(Pkg. Cont'd)

| CODE | PART NAME AND PART NUMBER |
|---|---|
| (Cont'd) | |
| | 1 - 1486 205 "O" Ring, Cylinder Head Ferrule |
| | 1 - 1316 849 "O" Ring, Housing |
| | 2 - 1556 385 "O" Ring, Housing Port |
| | 1 - 1536 268 "O" Ring, Pressure Control Valve Body |
| | 1 - 1822 149 "O" Ring, Reaction, Upper |
| | 1 - 1733 615 "O" Ring, Shaft Cover |
| | 1 - 1733 612 "O" Ring, Valve Housing |
| | 1 - 1822 151 Seal, Reaction, Lower |
| | 1 - 1822 203 Seal, Shaft Adjusting Screw |
| | 1 - 2072 039 Seal, Shaft Oil |
| | 1 - 1822 324 Seal, Worm Sleeve |
| | "O" RING and SEAL PACKAGE, POWER STEERING GEAR . . . . Part No. *2084 840 |
| | Consists of: |
| | 1 - ---- --- Gasket, Valve Housing Plug |
| | 1 - 1733 602 "O" Ring, Column Support |
| | 2 - 1733 562 "O" Ring, Cylinder Head |
| | 1 - 1486 205 "O" Ring, Cylinder Head Ferrule |
| | 1 - 1823 150 "O" Ring, Housing |
| | 2 - 1556 385 "O" Ring, Housing Port |
| | 1 - 1536 268 "O" Ring, Pressure Control Valve |
| | 1 - 1823 091 "O" Ring, Reaction, Lower |
| | 1 - 1733 615 "O" Ring, Shaft Cover |
| | 1 - 1733 612 "O" Ring, Valve Housing |
| | 1 - 1733 593 Seal, Reaction, Upper |
| | 1 - 1822 203 Seal, Shaft Adjusting Screw |
| | 1 - 1730 985 Seal, Shaft Oil |
| | 1 - 1822 324 Seal, Worm Shaft Inner |
| 19-14-7 | BEARING and COLLAR PACKAGE, POWER STEERING GEAR COLUMN JACKET . . . Part No. 1879 708 |
| | Consists of: |
| | 1 - ---- --- Bearing |
| | 1 - ---- --- Collar |
| | 1 - ---- --- Spring |
| | 2 - ---- --- Washer |
| 19-14-10 | SUPPORT and INSULATOR PACKAGE, POWER STEERING GEAR COLUMN JACKET . . . . . Part No. *1879 713 |
| | Consists of: |
| | 1 - 1850 547 Insulator |
| | 1 - ---- --- Support |
| 19-15-2 | BALL PACKAGE, POWER STEERING GEAR WORM CONNECTOR . . Part No. 1450 995 |
| | Consists of: |
| | 40 - ---- --- Ball |
| 19-15-39 | SPRING PACKAGE, POWER STEERING GEAR BALL GUIDE . . . . . Part No. 2084 215 |
| | Consists of: |
| | 2 - ---- --- Plug |
| | 2 - ---- --- Spring |
| 19-27-2 | ARM PACKAGE, STEERING LINKAGE GEAR ARM. . Part No. *2084 613 |
| | Consists of: |
| | 1 - ---- --- Arm |
| | 1 - ---- --- Nut |
| | 1 - 108 636 Pin |
| | 1 - 1670 299 Seal |



MyMopar.com

| CODE | PART NAME AND PART NUMBER |
|---|---|

19-27-31 IDLER ARM PACKAGE, STEERING LINKAGE . . Part No. *2084 614
Consists of:
1 - ---- --- Arm
1 - 2072 490 Bolt, Arm
1 - 1734 327 Bushing, Arm
1 - ---- --- Nut, Arm Bolt
1 - 128 014 Nut, Arm End
1 - ---- --- Oiler, Arm End
1 - 108 636 Pin, Arm End Nut Cotter
1 - 2072 455 Seal, Arm End

19-48-7 SMALL PARTS PACKAGE, GEARSHIFT CONTROL . Part No. ⊟2240 631
Consists of:
2 - 1676 200 Bushing, Transmission Gearshift Operating Lever Grommet
2 - 1137 669 Clip, Rod Cotter
2 - 148 148 Clip, Rod Swivel
2 - 1941 699 Grommet, Transmission Gearshift Operating Lever
4 - 631 217 Washer, Rod, Plain
2 - 632 258 Washer, Rod Swivel, Plain
2 - 6012 072 Washer, Rod Swivel Spring

19-54-2 PUMP PACKAGE, POWER STEERING GEAR . . . . Part No. ⊟2196 082
Consists of:
1 - ---- --- Pump
1 - 2120 019 Seal, Oil Reservoir Mounting
1 - 2120 018 Seal, Oil Reservoir Oil

19-54-128 FLOW CONTROL VALVE PLUG and SNAP RING PACKAGE, POWER STEERING . . . Part No. 1879 353
Consists of:
1 - ---- --- Plug
1 - ---- --- Ring

19-57-2 PISTON and SPRING PACKAGE, POWER STEERING GEAR PRESSURE CONTROL VALVE. . . . Part No. 1879 509
Consists of:
1 - ---- --- Piston
1 - 1822 442 Spring

21-01-3 GASKET SET, STANDARD TRANSMISSION . . . . . Part No. 1752 479
Consists of:
2 - 865 180 Gasket, Bearing Retainer
1 - 1635 273 Gasket, Case to Adapter
1 - 1853 856 Gasket, Gearshift Housing

GASKET and SEAL PACKAGE, POWERFLITE TRANSMISSION, PARTIAL . . . . . Part No. 2084 616
Consists of:
1 - 1408 254 Gasket, Extension
1 - 1408 255 Gasket, Output Shaft Support
(Pkg. Cont'd)

| CODE | PART NAME AND PART NUMBER |
|---|---|

(Cont'd)
1 - 1408 282 Gasket, Oil Pan
1 - 1408 245 Seal, Frt. Oil Pump Housing
1 - 1738 265 Seal, Reaction Shaft
1 - 1486 536 Seal, Reaction Shaft
1 - 1738 264 Seal, Frt. Pump Drive Sleeve
1 - 1738 263 Seal, Hub

GASKET and SEAL PACKAGE, COMPLETE POWERFLITE TRANSMISSION . . . . . Part No. 2084 617
Consists of:
1 - 1408 254 Gasket, Extension
1 - 1408 255 Gasket, Output Shaft Support
1 - 1408 282 Gasket, Oil Pan
1 - 1672 066 Gasket, Valve Body
1 - 1117 819 Gasket, Regulator Valve Spring Retainer
1 - 1408 375 Gasket, Torque Converter Valve Spring Retainer
1 - 1316 864 "O" Ring, Control Cable
1 - 1736 376 Ring, Output Shaft Seal
1 - 1738 262 Ring, Direct Clutch Piston Retainer Seal
1 - 1537 149 Ring, Reaction Shaft Seal
1 - 1672 358 Ring, Throttle Cam Shaft Sleeve Seal
1 - 1408 245 Seal, Frt. Oil Pump Housing
1 - 1486 536 Seal, Reaction Shaft
1 - 1738 265 Seal, Reaction Shaft
1 - 1738 263 Seal, Hub
1 - 1738 261 Seal, Direct Clutch Piston Ring
1 - 1671 763 Seal, Output Shaft Rr. Bearing
2 - 1401 256 Seal, Oil Strainer Tube
1 - 863 987 Seal, Oil Pan Drain Plug
1 - 1738 264 Seal, Frt. Oil Pump Drive Sleeve Sleeve Seal

GASKET SET, AUTO. 3 SPEED TRANSMISSION . . . . . Part No. 1879 507
Consists of:
1 - 1853 888 Gasket, Shaft Support
1 - 1853 891 Gasket, Extension
1 - 1636 448 Gasket, Oil Pan
1 - 1824 553 Ring, Shaft Seal
1 - 1408 245 Seal, Oil Pump Housing

GASKET PACKAGE, STANDARD TRANSMISSION . . . . . Part No. 2084 243
Consists of:
1 - 1921 475 Gasket, Pinion Bearing Retainer
1 - 1921 480 Gasket, Shaft Bearing Retainer
1 - 1921 507 Gasket, Gearshift Housing

SEAL AND GASKET PACKAGE, STANDARD TRANSMISSION . . . . . Part No. 2196 069
Consists of:
1 - 1949 346 Gasket, Case Cover
3 - 865 180 Gasket, Bearing Retainer
(Pkg. Cont'd)



MyMopar.com

| CODE | PART NAME AND PART NUMBER |
|---|---|

(Cont'd)

1 - 1949 361 Gasket, Extension
2 - 1949 350 Seal, Gearshift Lever
1 - 1949 933 Seal, Pinion Retainer
1 - 1854 449 Seal, Main Shaft Oil

SEAL and GASKET PACKAGE, AUTO TRANSMISSION . . Part No. 2196 063
Consists of:
1 - 1942 390 Gasket, Reaction Shaft Support
1 - 1949 556 Gasket, Extension
1 - 2125 239 Gasket, Extension
1 - 863 987 Gasket, Drain Plug
1 - 1942 516 Gasket, Oil Pan
2 - 1942 109 Ring, Governor Support Seal
2 - 1941 831 Ring, Input Shaft Seal
2 - 1942 389 Ring, Reaction Shaft Support Seal
1 - 1942 396 Seal, Front Clutch Piston, Inner
1 - 1942 397 Seal, Front Clutch Piston, Outer
1 - 1942 384 Seal, Front Oil Pump Housing
1 - 1942 412 Seal, Rear Clutch Piston, Inner
1 - 1942 397 Seal, Rear Clutch Piston, Outer
1 - 1942 303 Seal, Impeller Hub
1 - 1942 401 Seal, Output Shaft
1 - 1732 183 Seal, Throttle Lever Shaft
1 - 1942 454 Washer, Output Shaft Thrust .052"
1 - 1942 455 Washer, Output Shaft Thrust .068"
1 - 1942 456 Washer, Output Shaft Thrust .083"

GASKET and SEAL PACKAGE, TRANSMISSION COMPLETE OVERHAUL, AUTO 3 SPEED . . . . . Part No. 2240 192
Consists of:
1 - 1117 819 Gasket, Spring Retainer
1 - 1408 375 Gasket, Spring Retainer
1 - 1636 303 Gasket, Regulator Valve Body
1 - 1636 448 Gasket, Oil Pan
1 - 1672 074 Gasket, Cable Adapter Housing
1 - 1853 891 Gasket, Extension
1 - 1853 888 Gasket, Output Shaft Support
1 - 1638 667 Plate, Carrier Thrust
2 - 1314 249 Ring, Kickdown Piston Seal
1 - 1322 363 Ring, Kickdown Piston Seal
1 - 1323 593 Ring, Input Shaft Oil Seal
1 - 1329 638 Ring, Reverse Servo Piston
2 - 1636 324 Ring, Shaft Seal
2 - 1636 469 Ring, Sun Gear Rear Clutch Seal
2 - 1636 470 Ring, Governor Support Seal
4 - 1672 287 Ring, Intermediate Shaft Seal
1 - 1736 224 Ring, Kickdown Piston Seal
1 - 1736 233 Ring, Accumulator Piston
1 - 1736 376 Ring, Output Shaft Seal

(Pkg. Cont'd)

| CODE | PART NAME AND PART NUMBER |
|---|---|

(Cont'd)

1 - 1854 304 Ring, Front Oil Pump Drive Sleeve Seal
1 - 1824 549 Ring, Front Clutch Piston Seal
1 - 1824 550 Ring, Rear Clutch Piston Seal
1 - 1824 551 Ring, Front Clutch Piston Seal
1 - 1824 552 Ring, Rear Clutch Piston Seal
1 - 1824 553 Ring, Reaction Shaft Seal
1 - 1941 831 Ring, Input Shaft Oil Seal
2 - 1401 256 Seal, Oil Strainer Tube
1 - 1408 245 Seal, Front Oil Pump Housing
1 - 1738 263 Seal, Impeller Hub Oil
1 - 1738 264 Seal, Front Oil Pump Drive Sleeve
2 - 1636 290 Washer, Front Clutch and Sun Gear Thrust
1 - 1636 314 Washer, Sun Gear Thrust
1 - 1636 376 Washer, Carrier Thrust
1 - 1638 669 Washer, Input Shaft Thrust
1 - 1638 670 Washer, Input Shaft Thrust
1 - 1638 671 Washer, Input Shaft Thrust
1 - 1823 872 Washer, Input Shaft Thrust

GASKET, PLATE and DISC PACKAGE, TRANSMISSION COMPLETE OVERHAUL, POWER-FLITE . . . . . Part No. 2240 194
Consists of:
6 - 1633 843 Disc, Clutch Driving
1 - 1117 819 Gasket, Valve Spring Retainer
1 - 1672 066 Gasket, Regulator Valve Body
1 - 1408 254 Gasket, Extension
1 - 1408 255 Gasket, Output Shaft
1 - 1408 282 Gasket, Oil Pan
1 - 1408 375 Gasket, Valve Spring Retainer
6 - 1408 232 Plate, Direct Clutch
1 - 1316 864 "O" Ring, Control Cable
1 - 1329 638 Ring, Reverse Servo Piston
1 - 1736 376 Ring, Output Shaft Seal
1 - 863 987 Seal, Drain Plug
2 - 1401 256 Seal, Oil Strainer Tube
1 - 1408 245 Seal, Front Oil Pump Housing
1 - 1486 536 Seal, Reaction Shaft
1 - 1671 763 Seal, Output Shaft Bearing Oil
1 - 1738 261 Seal, Direct Clutch Piston Ring
1 - 1738 263 Seal, Impeller Hub
1 - 1738 265 Seal, Reaction Shaft
1 - 1638 462 Washer, Carrier Front Thrust

21-113-24 SWITCH PACKAGE, TRANSMISSION NEUTRAL STARTER . . Part No. 1704 283
Consists of:
1 - 1316 849 "O" Ring, Mounting
1 - ---- --- Switch, Neutral Starter
1 - 1704 482 Washer, Mounting



MyMopar.com

| CODE | PART NAME AND PART NUMBER |
|---|---|
| 21-118-1 | GASKET SET, AUTO 3 SPEED TRANSMISSION FRONT OIL PUMP . . . . . Part No. 1843 230<br>Consists of:<br>1 - 1636 303 Gasket, Regulator Valve Body<br>1 - 1117 819 Gasket, Regulator Valve Spring Retainer<br>1 - 1408 375 Gasket, Torque Converter Control Valve Spring Retainer<br>1 - 1738 263 Oil Seal, Impeller Hub<br>1 - 1824 553 Ring, Reaction Shaft Seal<br>1 - 1408 245 Seal, Frt. Oil Pump Housing<br>1 - 1738 264 Seal, Frt. Oil Pump Drive Sleeve |
| | GASKET SET, AUTO. 3 SPEED TRANSMISSION REAR OIL PUMP and EXTENSION . . . . Part No. 1879 508<br>Consists of:<br>1 - 1853 888 Gasket, Output Shaft Support<br>1 - 1853 891 Gasket, Extension<br>2 - 1636 470 Ring, Support Seal |
| 21-118-6 | ROTOR PACKAGE, FRONT OIL PUMP, AUTO TRANSMISSION . . . . . Part No. 2196 796<br>Consists of:<br>1 - ---- --- Rotor, Outer<br>1 - 1949 600 Rotor, Inner |
| | ROTOR PACKAGE, REAR OIL PUMP, AUTO. TRANSMISSION . . . . . Part No. 2196 795<br>Consists of:<br>1 - 1672 296 Rotor, Outer<br>1 - ---- --- Rotor, Inner |
| 21-118-9 | ROTOR PACKAGE, AUTO 3 SPEED TRANSMISSION . . . . . Part No. 2084 321<br>Consists of:<br>1 - 1854 304 Ring, Drive Sleeve<br>1 - 1949 600 Rotor, Pump, Inner<br>1 - 1738 264 Seal, Drive Sleeve<br>1 - 1949 601 Sleeve, Drive |
| 21-131-1 | BODY PACKAGE, POWERFLITE TRANSMISSION REGULATOR VALVE . . . . . Part No. 1643 243<br>Consists of:<br>1 - ---- --- Body, Regulator Valve<br>1 - 1630 812 Spring, Torque Converter Control Valve<br>1 - 1630 811 Valve, Torque Converter Control |
| 21-133-3 | GASKET and SEAL PACKAGE, AUTO. 3 SPEED TRANSMISSION FRONT and REAR CLUTCH and INPUT SHAFT . . . . . Part No. 1843 229<br>Consists of:<br>1 - 1636 448 Gasket, Oil Pan<br>1 - 1672 074 Gasket, Cable Adapter<br>1 - 1824 551 Ring, Frt. Clutch Piston Seal, Inner<br>1 - 1824 549 Ring, Frt. Clutch Piston Seal, Outer<br>1 - 1323 593 Ring, Input Shaft, Large<br>1 - 1941 831 Ring, Input Shaft, Small<br>1 - 1824 550 Ring, Rear Clutch Piston Seal, Outer<br>(Pkg. Cont'd) |

| CODE | PART NAME AND PART NUMBER |
|---|---|
| (Cont'd) | 1 - 1824 552 Ring, Rear Clutch Piston Seal, Inner<br>1 - 1314 249 Ring, Output Shaft Seal, Large<br>1 - 1736 376 Ring, Output Shaft Seal, Small<br>2 - 1636 324 Ring, Intermediate Shaft Seal, Small<br>4 - 1672 287 Ring, Intermediate Shaft Seal, Large<br>2 - 1636 469 Ring, Rear Clutch Seal<br>2 - 1401 256 Seal, Oil Strainer Tube |
| 21-133-4 | RETAINER PACKAGE, AUTO. 3 SPEED TRANSMISSION, REAR CLUTCH PISTON . . . . . Part No. 2240 383<br>Consists of:<br>1 - ---- --- Retainer, Rear Clutch<br>1 - 2124 991 Plate, Rear Clutch Pressure |
| 21-133-37 | PLATE and DISC PACKAGE, POWERFLITE TRANSMISSION DIRECT CLUTCH DRIVING . . . . . Part No. 1643 259<br>Consists of:<br>7 - ---- --- Disc<br>7 - ---- --- Plate |
| 21-138-2 | REPAIR PACKAGE, POWERFLITE TRANSMISSION GOVERNOR . . . . . Part No. 1653 463<br>Consists of:<br>1 - ---- --- Body, Governor<br>1 - 1329 702 Ring, Weight<br>1 - 1559 495 Ring, Weight<br>1 - 1736 468 Screw, Locating<br>1 - 1556 082 Shaft, Valve<br>2 - 1638 461 Snap Ring, Shaft<br>1 - 1559 498 Spring, Weight<br>1 - 1315 155 Valve, Governor<br>1 - 1559 494 Weight, Governor, Outer<br>1 - 1559 496 Weight, Governor, Intermediate<br>1 - 1559 497 Weight, Governor, Inner |
| | REPAIR PACKAGE, AUTO. 3 SPEED TRANSMISSION GOVERNOR . . . . . Part No. 2084 602<br>Consists of:<br>1 - ---- --- Body, Governor<br>1 - 1736 468 Screw, Locating<br>1 - 1556 082 Shaft, Valve<br>1 - 1949 858 Spring, Weight<br>1 - 1636 464 Snap Ring, Inner Weight<br>1 - 1636 465 Snap Ring, Outer Weight<br>2 - 1638 461 Snap Ring, Valve Shaft<br>1 - 1736 424 Valve, Governor<br>1 - 1636 461 Weight, Governor, Outer<br>1 - 1636 462 Weight, Governor, Inner |
| | REPAIR PACKAGE, AUTO. 3 SPEED TRANSMISSION GOVERNOR . . . . . Part No. 2084 603<br>Consists of:<br>1 - ---- --- Body, Governor<br>1 - 1736 468 Screw, Locating<br>1 - 1556 082 Shaft, Valve<br>1 - 1636 464 Snap Ring, Inner Weight<br>1 - 1636 465 Snap Ring, Outer Weight<br>2 - 1638 461 Snap Ring, Valve Shaft<br>1 - 1949 859 Spring, Weight<br>(Pkg. Cont'd) |


MyMopar.com

| CODE | PART NAME AND PART NUMBER |
|---|---|
| (Cont'd) | |
| | 1 - 1736 424 Valve, Governor |
| | 1 - 1636 461 Weight, Governor, Outer |
| | 1 - 1636 462 Weight, Governor, Inner |
| | REPAIR PACKAGE, AUTO. TRANSMISSION GOVERNOR . . Part No. 2196 998 |
| | Consists of: |
| | 4 - 179 794 Bolt |
| | 1 - ---- --- Body, Governor |
| | 2 - 2125 024 Lock |
| | 2 - 1942 109 Ring, Support Seal or Piston |
| | 1 - 1636 464 Snap Ring, Weight, Inner |
| | 1 - 1636 465 Snap Ring, Weight, Outer |
| | 2 - 1638 461 Snap Ring, Valve Shaft |
| | 1 - 6022 583 Ring |
| | 1 - 2124 662 Spring, Governor |
| | 1 - 1556 082 Shaft, Valve |
| | 1 - 2124 663 Valve, Governor |
| | 1 - 1636 461 Weight, Governor, Outer |
| | 1 - 1636 462 Weight, Governor, Inner |
| | REPAIR PACKAGE, AUTO. 3 SPEED TRANSMISSION GOVERNOR . . . . . Part No. 1843 403 |
| | Consists of: |
| | 1 - ---- --- Body, Governor, w/Support |
| | 1 - 1556 082 Shaft, Valve |
| | 1 - 1736 468 Screw, Locating |
| | 1 - 2124 252 Spring, Weight |
| | 1 - 1636 464 Snap Ring, Inner Weight |
| | 1 - 1636 465 Snap Ring, Outer Weight |
| | 2 - 1638 461 Snap Ring, Valve Shaft |
| | 1 - 1736 424 Valve, Governor |
| | 1 - 1823 726 Weight, Outer |
| | 1 - 1636 462 Weight, Inner |
| 23-14-53 | HANDLE PACKAGE, FRONT DOOR VENT WING . . . . . Part No. 1954 110 |
| | Consists of: |
| | 1 - ----- --- Handle, Right |
| | 1 - ---- --- Key |
| | 1 - ---- --- Pin |
| | 1 - 6000 110 Washer |
| | 1 - ---- --- Spring |
| | HANDLE PACKAGE, FRONT DOOR VENT WING . . . . . Part No. 1954 111 |
| | Consists of: |
| | 1 - ---- --- Handle, Left |
| | 1 - ---- --- Key |
| | 1 - ---- --- Pin |
| | 1 - 6000 110 Washer |
| | 1 - ---- --- Spring |
| 23-17-2 | CYLINDER and KEYS PACKAGE, DOOR IGNITION and TAILGATE LOCK . . . . . Part No. 1838 985 |
| | Consists of: |
| | 1 - ---- --- Cylinder, Door, Right |
| | 1 - ---- --- Cylinder, Door, Left |
| | 1 - ---- --- Cylinder, Ignition |
| | 1 - ---- --- Cylinder, Tailgate |
| | CYLINDER and KEYS PACKAGE, DOOR and IGNITION . . Part No. 2080 222 |
| | Consists of: |
| | 1 - ---- --- Cylinder, Door, Right |
| | 1 - ---- --- Cylinder, Door, Left |
| | 1 - ---- --- Cylinder, Ignition |
| | 2 - ---- --- Keys |
| 23-17-5 | CYLINDER and KEYS PACKAGE, DECK LID LOCK . . . . Part No. 2086 049 |
| | Consists of: |
| | 1 - ---- --- Cylinder |
| | 2 - ---- --- Keys |
| | CYLINDER and KEYS PACKAGE, DECK LID LOCK . . . Part No. 2086 050 |
| | Consists of: |
| | 1 - ---- --- Cylinder |
| | 2 - ---- --- Keys |
| 23-17-24 | CYLINDER and KEYS PACKAGE, DOOR LOCK . . . . . Part No. 2086 048 |
| | Consists of: |
| | 1 - ---- --- Cylinder, Right |
| | 1 - ---- --- Cylinder, Left |
| | 2 - ---- --- Keys |
| 23-17-49 | CYLINDER and KEYS PACKAGE, TAILGATE LOCK . . . Part No. 1830 041 |
| | Consists of: |
| | 1 - ---- --- Cylinder |
| | 2 - ---- --- Keys |
| | CYLINDER and KEYS PACKAGE, TAILGATE LOCK . . . . Part No. 1972 966 |
| | Consists of: |
| | 1 - ---- --- Cylinder |
| | 2 - ---- --- Keys |
| 23-17-72 | CYLINDER and KEYS PACKAGE, TIREWELL COVER LOCK . . . . . Part No. 1830 044 |
| | Consists of: |
| | 1 - ---- --- Cylinder |
| | 2 - ---- --- Keys |
| 23-18-120 | TERMINAL and INSULATOR PACKAGE, ELECTRIC DOOR LOCK SOLENOID . . . . Part No. 1843 225 |
| | Consists of: |
| | 10 - ---- --- Insulators |
| | 10 - ---- --- Terminals, Male |
| | 10 - ---- --- Terminals, Female |
| 23-47-414 | COIL PACKAGE, ELECTRIC SEAT ADJUSTOR DRIVE UNIT SOLENOID . . . . . Part No. 1830 290 |
| | Consists of: |
| | 1 - ---- --- Coil |
| | 1 - ---- --- Cover |
| | 1 - ---- --- Cap |
| 23-52-1 | SPRING PACKAGE, SEAT CUSHION HELPER . . . Part No. 1872 552 |
| | Consists of: |
| | 17 - ---- --- Clip |
| | 6 - ---- --- Spring Helper |
| | 10 - 6008 072 Hog Ring |
| 23-58-381 | ROTOR PACKAGE, FOLDING TOP LIFT PUMP . . . . Part No. 1641 650 |
| | Consists of: |
| | 1 - ---- --- Rotor, Inner |
| | 1 - ---- --- Rotor, Outer |
| 23-67-10 | GEAR and DRIVE END COVER PLATE GASKET PACKAGE, WINDSHIELD WIPER MOTOR . . . . . Part No. 1879 598 |
| | Consists of: |
| | 1 - 1627 273 Package, Brush and Spring |
| | 2 - ---- --- Brush |
| | 2 - ---- --- Spring |
| | 1 - 1879 598 Package, Gear and Gasket |
| | (Pkg. Cont'd) |


MyMopar.com

| CODE | PART NAME AND PART NUMBER |
|---|---|
| (Cont'd) | |
| | 1 - 1818 685 Gear, Right |
| | 1 - 1752 513 Gasket, Drive End Cover |
| | 1 - 1879 599 Package, Switch Plate and Gasket |
| | 1 - ---- --- Contact, Switch |
| | 1 - 1752 513 Gasket, Drive End Cover |
| | GEAR and DRIVE END COVER PLATE GASKET PACKAGE, WINDSHIELD WIPER MOTOR . . . . . Part No. 1879 601 |
| | Consists of: |
| | 1 - 1752 518 Package, Brush and Spring |
| | 2 - ---- --- Brush |
| | 2 - ---- --- Spring |
| | 1 - 1879 601 Package, Gear and Gasket |
| | 1 - 1594 973 Gear, Right |
| | 1 - 1605 572 Gasket, Drive End Cover |
| | 1 - 1879 602 Package, Switch Plate and Gasket |
| | 1 - 1818 890 Contact, Switch |
| | 1 - 1605 572 Gasket, Drive End Cover |
| 23-67-16 | BRUSH and SPRING PACKAGE, WINDSHIELD WIPER MOTOR . . . . . Part No. 1627 273 |
| | Consists of: |
| | 2 - ---- --- Brush |
| | 2 - ---- --- Spring |
| | BRUSH and SPRING PACKAGE, WINDSHIELD WIPER MOTOR . . . . . Part No. 1752 518 |
| | Consists of: |
| | 2 - ---- --- Brush |
| | 2 - ---- --- Spring |
| | BRUSH and SPRING PACKAGE, WINDSHIELD WIPER MOTOR . . . . . Part No. 1886 558 |
| | Consists of: |
| | 2 - ---- --- Brush |
| | 1 - ---- --- Spring |
| 23-67-164 | SWITCH CONTACT, COVER PLATE and GASKET PACKAGE, WINDSHIELD WIPER MOTOR DRIVE END . . . . . Part No. 1879 599 |
| | Consists of: |
| | 1 - ---- --- Contact, Switch |
| | 1 - 1752 513 Gasket, Drive End |
| | SWITCH CONTACT, COVER PLATE and GASKET PACKAGE, WINDSHIELD WIPER MOTOR DRIVE END . . . . . Part No. 1879 602 |
| | Consists of: |
| | 1 - 1818 890 Contact, Switch |
| | 1 - 1605 572 Gasket, Drive End Cover |
| 24-25-2 | PISTON RING PACKAGE . Part No. 2196 301 |
| | Consists of: |
| | 1 - 1377 904 Gasket, Cylinder Head |
| | 1 - 1378 313 Gasket, Plate |
| | 1 - 1377 825 Gasket, Oil Sump |
| | 1 - ---- --- Ring, Piston |
| 24-25-3 | PISTON and CONNECTING ROD PACKAGE . . . . . Part No. 1426 500 |
| | Consists of: |
| | 1 - ---- --- Ball, Oil Pressure Relief |
| | 1 - 1377 825 Gasket, Oil Sump |
| | 1 - 1378 313 Gasket, Valve Plate |
| | 1 - 1377 904 Gasket, Cylinder Head |
| | 1 - ---- --- Piston and Connecting Rod |
| | 1 - ---- --- Spring, Oil Pressure |
| 24-25-70 | SEAL PACKAGE, CRANK-SHAFT GAS . . . . . Part No. 1426 501 |
| | Consists of: |
| | 1 - ---- --- Seal, Crankshaft |
| | 1 - ---- --- Seal, Bearing Housing |
| 24-25-93 | VALVE PLATE PACKAGE Part No. 1734 837 |
| | Consists of: |
| | 1 - 1377 904 Gasket |
| | 1 - 1378 313 Gasket |
| | 1 - ---- --- Valve, Suction |
| | 1 - 1730 580 Valve Plate |
| 24-25-154 | CRANKSHAFT PACKAGE. Part No. 2196 304 |
| | Consists of: |
| | 1 - ---- --- Crankshaft |
| | 1 - 1377 825 Gasket |
| | 1 - 1377 904 Gasket |
| | 1 - 1378 313 Gasket |
| | 1 - 1377 831 Seal |
| | 1 - ---- --- Seal Crankshaft |
| | 1 - ---- --- Washer, Thrust |
| 24-25-162 | HOUSING PACKAGE, BEARING . . . . . Part No. 2196 315 |
| | Consists of: |
| | 1 - ---- --- Housing |
| | 1 - ---- --- Seal |
| 24-25-246 | PUMP PACKAGE, COM-PRESSOR OIL . . . . . Part No. 2196 306 |
| | Consists of: |
| | 1 - ---- --- Cover, Oil Sump |
| | 1 - ---- --- Rotor, Inner |
| | 1 - ---- --- Rotor, Outer |
| | 1 - 1747 988 Seal, Oil Pump Cover |
| | 1 - ---- --- Shaft, Oil Pump Drive |
| 24-28-27 | SEAL PACKAGE, HEATER HOUSING . . . . . Part No. 2096 665 |
| | Consists of: |
| | 1 - ---- --- Housing, Heater |
| | 2 - ---- --- Nut |
| | 1 - ---- --- Retainer Seal |
| | 2 - ---- --- Screw |
| | 1 - ---- --- Seal |

## NOTES



MyMopar.com

# GROUP 1 - ACCESSORIES

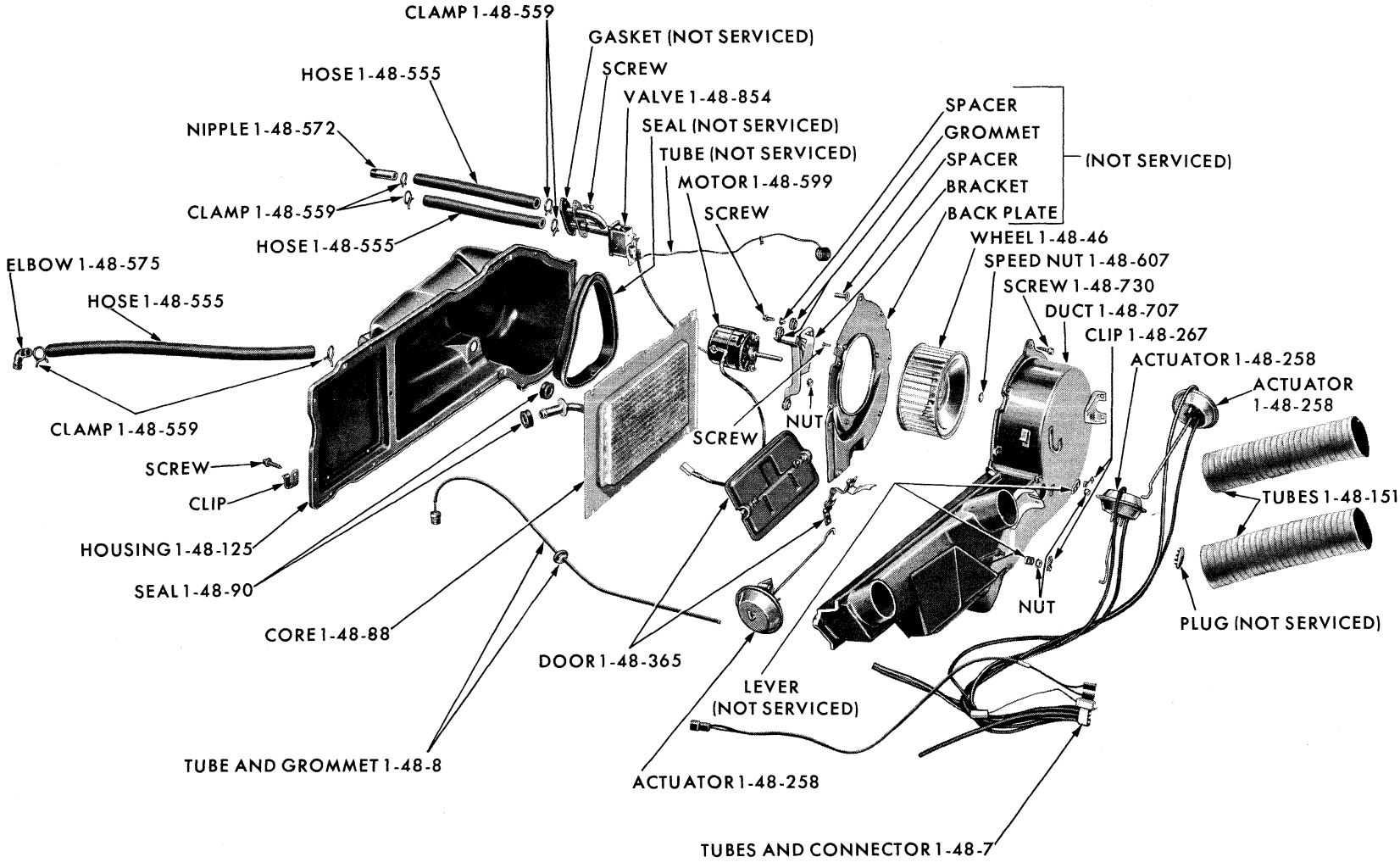


**PARTS INDICATED BY NAME ONLY - ORDER BY DESCRIPTION**

19x8554A

HEATER - MODEL 715

MyMopar.com

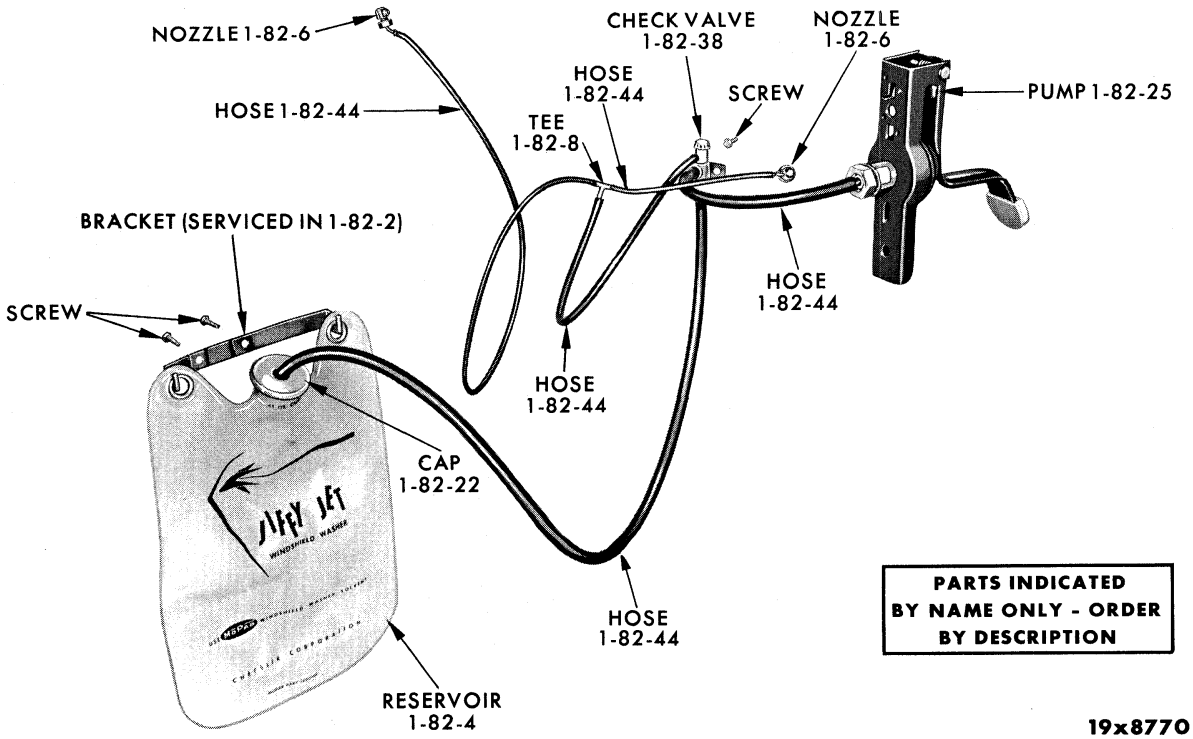


FOOT-CONTROLLED WINDSHIELD WASHER SYSTEM

## NOTES



MyMopar.com

# GROUP 1 - ACCESSORIES

| CODE | PART NAME AND DESCRIPTION | NO. OF CYL. | PLYMOUTH | DODGE | DESOTO | CHRYSLER AND IMPERIAL | PER CAR | PART NUMBER |
|---|---|---|---|---|---|---|---|---|
| **1-01-0** | **BUMPER OR GRILLE GUARD** | | | | | | | |
| 1-01-1 | TIE BAR PACKAGE, Front Bumper | 6-8 | 60 | - | - | - | 1 | *2196 495 |
| **1-02-0** | **DECK LID TIRE COVER** | | | | | | | |
| 1-02-1 | COVER PACKAGE, Deck Lid Tire | 6-8 | 60 | - | - | - | 1 | *2084 786 |
| **1-04-0** | **AUTOMATIC HEADLAMP DIMMER** | | | | | | | |
| 1-04-1 | DIMMER PACKAGE, Automatic Headlamp | 6-8 | 60 | 60 | 60 | 60 | 1 | *2197 571 |
| 1-04-4 | SCANNER, Automatic Headlamp Dimmer | 6-8 | 60 | 60 | 60 | 60 | 1 | 1971 157 |
| | Factory Installed | 8 | - | - | 60 | 60 | 1 | 2096 894 |
| 1-04-6 | BASE, Automatic Headlamp Dimmer Scanner, Field Installed, PC1, PC2, PC3 | 6-8 | 60 | - | - | 60 | 1 | 2197 883 |
| | BASE, Factory Installed | 6-8 | - | 60 | 60 | - | 1 | 2096 899 |
| | PC1, PC2, PC3 | 8 | - | - | - | 60 | 1 | 2096 901 |
| | Field Installed, PY1 | 6-8 | - | 60 | 60 | 60 | 1 | 2197 884 |
| 1-04-7 | SPACER, Automatic Headlamp Dimmer Scanner Base Mounting, PY1 | 8 | - | - | - | 60 | 2 | 1971 162 |
| 1-04-8 | SCREW, Scanner Mounting | 6-8 | 60 | 60 | 60 | 60 | 1 | 892 569 |
| 1-04-10 | SKIRT, Automatic Headlamp Dimmer Scanner | 6-8 | 60 | 60 | 60 | 60 | 1 | 2197 882 |
| 1-04-12 | AMPLIFIER, Automatic Headlamp Dimmer | 6-8 | 60 | 60 | 60 | 60 | 1 | 2097 578 |
| 1-04-18 | ADAPTER, Automatic Headlamp Dimmer | 8 | 60 | 60 | 60 | 60 | 3 | 2096 872 |
| **1-06-0** | **WARNING LIGHT** | | | | | | | |
| 1-06-1 | LIGHT PACKAGE, Emergency Flashing Warning | 6-8 | 60 | 60 | 60 | - | 1 | *2097 277 |
| | | 8 | - | - | - | 60 | 1 | 2097 278 |
| 1-06-2 | FLASHER, Emergency | 6-8 | 60 | 60 | 60 | 60 | 1 | 2196 300 |
| **1-07-0** | **LOAD LEVELLER** | | | | | | | |
| 1-07-1 | LOAD LEVELLER, Shock Absorber | 6-8 | 60 | 60 | 60 | 60 | 2 | ⊟2206 633 |
| **1-08-0** | **TAILGATE WINDOW SCREEN** | | | | | | | |
| 1-08-1 | SCREEN, Tailgate Window | 6-8 | 60 | 60 | 60 | 60 | 1 | 2196 144 |
| **1-09-0** | **HANDBRAKE SIGNAL LAMP** | | | | | | | |
| 1-09-1 | LAMP PACKAGE | 6-8 | 60 | - | - | - | 1 | *1972 490 |
| | | 6-8 | - | 60 | 60 | - | 1 | 2096 797 |
| **1-10-0** | **BACK-UP LAMP** | | | | | | | |
| 1-10-1 | LAMP PACKAGE, w/Std. Trans., except Sub. | 6-8 | 60 | - | - | - | 1 | *2097 140 |
| | w/Auto. Trans., except Sub. | 6-8 | 60 | - | - | - | 1 | 2097 141 |
| | w/Std. Trans., Sub. | 6-8 | 60 | - | - | - | 1 | 2097 142 |
| | w/Auto. Trans., Sub. | 6-8 | 60 | - | - | - | 1 | 2097 143 |
| | w/Std. Trans., PD1, PD2 | 8 | - | 60 | 60 | - | 1 | 2097 144 |
| | w/Auto. Trans., PD1, PD2 | 8 | - | 60 | 60 | - | 1 | 2097 145 |
| | w/Std. Trans., PD3, PD4 | 6-8 | - | 60 | - | - | 1 | 2097 146 |
| | w/Auto. Trans., PD3, PD4 | 6-8 | - | 60 | - | - | 1 | 2097 147 |
| **1-12-0** | **CIGAR LIGHTER** | | | | | | | |
| | NOTE: For Components see part type code 8-20-0. | | | | | | | |
| 1-12-1 | LIGHTER PACKAGE, PP1-L, PP2-L | 6-8 | 60 | - | - | - | 1 | *2096 633 |
| | PD3-L, PD4-L | 6-8 | - | 60 | - | - | 1 | 2096 634 |

★ Indicates use as required. Numerals in parentheses ( ) refer to notes. Printed in U.S.A.
⊟ Indicates parts not listed in any previous parts book. Prices and specifications subject to change without notice.
* Indicates change or addition.



Dec. 9, 1960 Supersedes April 20, 1960.

MyMopar.com

| CODE | PART NAME AND DESCRIPTION | NO. OF CYL. | PLYMOUTH | DODGE | DESOTO | CHRYSLER AND IMPERIAL | PER CAR | PART NUMBER |
|---|---|---|---|---|---|---|---|---|
| **1-13-0** | **UNDER HOOD LIGHT** | | | | | | | |
| 1-13-1 | LIGHT PACKAGE, Underhood | 6-8 | 60 | 60 | 60 | 60 | 1 | *1972 690 |
| 1-13-9 | SOCKET and BRACKET, Underhood Lamp, PC1, PC2, PC3 | 6-8 | 60 | 60 | 60 | 60 | 1 | 2096 857 |
| **1-14-0** | **MAP AND COURTESY LIGHT** | | | | | | | |
| 1-14-4 | LAMP PACKAGE, Map | 6-8 | - | 60 | 60 | - | 1 | *2096 595 |
| 1-14-40 | LAMP PACKAGE, Courtesy | 6-8 | 60 | 60 | - | - | 1 | *2096 386 |
| **1-19-0** | **GLOVE COMPARTMENT LIGHT** | | | | | | | |
| 1-19-1 | PACKAGE, PC1 | 6-8 | 60 | - | - | 60 | 1 | 1972 480 |
| | | 6-8 | - | 60 | 60 | - | 1 | 2096 926 |
| **1-21-0** | **CLOCK** | | | | | | | |
| 1-21-1 | CLOCK PACKAGE, Instrument Panel, PP1-L, PP1-M, PP2-L, PP2-M | 6-8 | 60 | - | - | - | 1 | *2096 555 |
| | | 6-8 | - | 60 | - | - | 1 | 2097 300 |
| | | 8 | - | - | 60 | - | 1 | 2096 864 |
| | PC1, PC2, PC3 | 8 | - | - | - | 60 | 1 | 2096 556 |
| 1-21-12 | CONTACT, Clock Lamp Socket | 6-8 | 60 | 60 | 60 | 60 | 1 | 657 572 |
| 1-21-22 | SOCKET, Clock Lamp | 6-8 | - | 60 | - | - | 1 | 1689 538 |
| | | 8 | - | - | 60 | - | 1 | 2096 374 |
| 1-21-25 | BEZEL, Clock Reset Cable | 6-8 | - | 60 | - | - | 1 | 1972 532 |
| **1-26-0** | **AUTOMATIC PILOT** | | | | | | | |
| 1-26-1 | AUTOMATIC PILOT PACKAGE, PC1, PC2, PC3 | 6-8 | - | - | - | 60 | 1 | *2198 087 |
| **1-30-0** | **TRUNK COMPARTMENT LIGHT** | | | | | | | |
| 1-30-1 | LIGHT PACKAGE, Trunk Compartment | 6-8 | 60 | 60 | 60 | 60 | 1 | *1972 689 |
| **1-32-0** | **VISOR** | | | | | | | |
| 1-32-2 | VISOR, Inside, Plexiglass, PC1, PC2, PC3, except Cv. Cp. | 6-8 | 60 | 60 | 60 | 60 | 1 | 2196 875 |
| 1-32-3 | VISOR, Inside, Padded, except Cv. Cp., White | 6-8 | 60 | 60 | - | - | 2 | 2163 900 |
| | Beige | 6-8 | 60 | - | - | - | 2 | 2163 903 |
| | Cv. Cp. | 6-8 | 60 | - | - | - | 2 | 2163 901 |
| **1-39-0** | **FUEL TANK LOCKING CAP** | | | | | | | |
| 1-39-2 | CAP, Fuel Tank Filler Tube Locking, except Sub. | 6-8 | 60 | 60 | 60 | 60 | 1 | 1948 754 |
| **1-42-0** | **POWER BRAKE** | | | | | | | |
| 1-42-1 | POWER BRAKE PACKAGE, PC1 | 6-8 | 60 | 60 | 60 | 60 | 1 | *2084 809 |
| **1-45-0** | **FENDER SKIRT** | | | | | | | |
| 1-45-1 | SKIRT PACKAGE, Fender, PP1, PP2, PD3, PD4, except Sub. | 6-8 | 60 | 60 | - | - | 1 | *2196 895 |



MyMopar.com

## 1-48-0 HOT WATER HEATER AND COMPONENT PARTS

NOTE: For Heater and Air Conditioning Unit see Group 24 - Air Conditioning.

NOTE: Quantity is (1) Per Car unless otherwise indicated.

NOTE: MODEL 715 - Fresh Air Heater
MODEL 716 - Recirculating Heater

| PART TYPE CODE | PART NAME | | MODEL 715 | MODEL 716 |
|---|---|---|---|---|
| 1-48-1 | HEATER PACKAGE, w/CONTROLS, PP1, PP2 | | *2219 072 | ---- --- |
| | PD1, PD2, PD3, PD4 | | 2219 073 | ---- --- |
| | PS1, PS3 | | 2219 074 | ---- --- |
| | PC1, PC2, PC3 | | 2219 075 | ---- --- |
| | PACKAGE, Heater w/CONTROLS PP1, PP2, PD1, PD2, PD3, PD4 | | ---- --- | 2197 898 |
| 1-48-4 | HEATER CONTROL, PP1, PP2 | | 2097 732 | ---- --- |
| | PD1, PD2, PD3, PD4, PS1, PS3 | | 1887 699 | ---- --- |
| | PY1 | | 1887 511 | ---- --- |
| 1-48-7 | TUBE, w/CONNECTOR, Fresh Air Door Control | | 2096 768 | ---- --- |
| | CONTROL, Heater | | 2096 799 | ---- --- |
| 1-48-8 | TUBE, Fresh Air Door Control | | 1971 676 | ---- --- |
| 1-48-10 | SOCKET, Heater Control Lamp, PP1, PP2 | | 2096 586 | ---- --- |
| | PY1 | | 1689 538 | ---- --- |
| 1-48-12 | BUTTON, Heater Control Push | | | |
| | PY1 | OFF | *1887 643 | ---- --- |
| | | LO-FAN | *1887 644 | ---- --- |
| | | HI-FAN | *1887 645 | ---- --- |
| | | DEF. | *1887 646 | ---- --- |
| | | AIR | *1887 647 | ---- --- |
| | PC1, PC2, PC3 | OFF | *1887 667 | ---- --- |
| | | LO-FAN | *1887 668 | ---- --- |
| | | HI-FAN | *1887 669 | ---- --- |
| | | DEF. | *1887 670 | ---- --- |
| | | AIR | *1887 671 | ---- --- |
| | PS1, PS3, PD1, PD2, PD3, PD4 | OFF | *1887 819 | ---- --- |
| | | LO-FAN | *1887 820 | ---- --- |
| | | HI-FAN | *1887 821 | ---- --- |
| | | DEF. | *1887 822 | ---- --- |
| | | AIR | *1887 823 | ---- --- |
| | PP1, PP2 | OFF | *1887 714 | ---- --- |
| | | LO-FAN | *1887 715 | ---- --- |
| | | HI-FAN | *1887 716 | ---- --- |
| | | DEF. | *1887 717 | ---- --- |
| | | AIR | *1887 718 | ---- --- |
| 1-48-13 | BRACKET, w/CABLE, Heater Control Lamp Socket, PD1, PD2, PD3, PD4, PS1, PS3 | | 2097 008 | ---- --- |
| 1-48-24 | PLUG, Heater Valve Tube Hole | | 1622 064 | ---- --- |
| 1-48-26 | PAD, Control Bezel, PP1, PP2 | | 1902 347 | ---- --- |
| | PD1, PD2, PD3, PD4, PS1, PS3 | | 2161 059 | ---- --- |
| | PC1, PC2, PC3 | | 2080 388 | ---- --- |
| 1-48-46 | WHEEL, Heater Blower Motor | | 1689 692 | ---- --- |
| | FAN, PP1, PP2, PD1, PD2, PD3, PD4 | | ---- --- | 2197 907 |
| 1-48-70 | BEZEL, Heater Control, PP1, PP2 | | 1901 565 | ---- --- |
| | PD1, PD2, PD3, PD4, PS1, PS3 | | 1902 328 | ---- --- |
| | BEZEL PACKAGE, Heater Control, PC1, PC2, PC3 | | *2084 054 | ---- --- |
| | BEZEL PACKAGE, Fresh Air Door, PC1, PC2, PC3 | | *2084 055 | ---- --- |
| 1-48-88 | CORE, Heater | | 1885 826 | ---- --- |
| | PP1, PP2, PD1, PD2, PD3, PD4 | | ---- --- | 2197 908 |
| 1-48-90 | SEAL, Heater Core Tube (2 Req'd) | | 1604 116 | ---- --- |
| 1-48-126 | SEAL, Heater Distribution Duct Inlet to Dash | | 1887 757 | ---- --- |
| 1-48-129 | SPACER, Heater Mounting, PP1, PP2, PD1, PD2, PD3, PD4 (13 Req'd) | | ---- --- | 684 748 |
| 1-48-137 | PACKAGE, Rear Window Defroster, w/o Switch, except PY1 | | 2097 416 | ---- --- |
| 1-48-138 | PACKAGE, Heater Defroster Nozzle, PP1, PP2 | | ---- --- | 2197 899 |
| | PD1, PD2, PD3, PD4 | | ---- --- | 2197 900 |



MyMopar.com

## 1-48-0 HOT WATER HEATER AND COMPONENT PARTS - Cont'd

| PART TYPE CODE | PART NAME | MODEL 715 | MODEL 716 |
|---|---|---|---|
| 1-48-144 | NOZZLE, Heater Defroster, Right, except PP1, PP2, PY1 | 1971 836 | ---- --- |
| | Left, except PP1, PP2, PY1 | 1971 693 | ---- --- |
| 1-48-151 | TUBE, Heater Defroster Flexible (2 Req'd) | 2096 989 | ---- --- |
| | Rear Window Defroster Duct, except PY1 | 1540 102 | ---- --- |
| | w/RETAINER (2 Req'd) PY1 | 1886 858 | ---- --- |
| | PY1 | 2096 989 | ---- --- |
| 1-48-158 | GRILLE, Rear Shelf Panel Defroster, Inlet, PC1, PC2, PC3 | 1971 091 | ---- --- |
| | Outlet | 1971 043 | ---- --- |
| 1-48-159 | BEZEL, Rear Shelf Panel Defroster Inlet Grille, except PY1 | *1819 014 | ---- --- |
| 1-48-165 | TERMINAL, w/CLIP, Rear Window Defroster, PC1, PC2, PC3, PY1 | 2197 136 | ---- --- |
| 1-48-191 | KNOB, REAR WINDOW, Defroster Switch, PP1, PP2 | 1887 591 | ---- --- |
| | PD1, PD2 | 1887 860 | ---- --- |
| | PD3, PD4 | 2096 309 | ---- --- |
| | PS1, PS3 | 1887 909 | ---- --- |
| | PC1, PC2, PC3 | 1887 991 | ---- --- |
| | PY1 | 1887 935 | ---- --- |
| 1-48-192 | BEZEL, Rear Window Defroster Switch, PD1, PD2, PD3, PD4, PS1, PS3 | 1972 588 | ---- --- |
| 1-48-203 | NUT, Heater Switch Mounting, PP1, PP2, PD1, PD2, PD3, PD4 | ---- --- | 1439 758 |
| 1-48-225 | WHEEL, Rear Shelf Panel Defroster Blower | 1239 241 | ---- --- |
| 1-48-226 | WASHER, Rear Window Defroster Blower Motor Mounting (6 Req'd) | 6006 065 | ---- --- |
| 1-48-258 | ACTUATOR, Heater Dist. Duct Defroster Vacuum, Complete | 2197 452 | ---- --- |
| | ACTUATOR, Fresh Air Door Vacuum | 1879 843 | ---- --- |
| | ACTUATOR, Heater Dist. Duct Shut-Off Vacuum, Complete | 1880 439 | ---- --- |
| 1-48-264 | HOUSING, Rear Shelf Panel Defroster Blower | 1819 470 | ---- --- |
| 1-48-268 | MOTOR and BRACKET, Rear Window Defroster Blower | 2096 772 | ---- --- |
| 1-48-299 | PACKAGE, Rear Window Defroster Switch, PP1, PP2 | 2097 226 | ---- --- |
| | PD1, PD2 | 2097 227 | ---- --- |
| | PD3, PD4 | 2097 228 | ---- --- |
| | PS1, PS3 | 2097 229 | ---- --- |
| | PC1, PC2, PC3 | 2097 230 | ---- --- |
| 1-48-300 | SWITCH, Rear Window Defroster, PP1, PP2 | 1972 772 | ---- --- |
| | PD1, PD2, PD3, PD4 | 2096 376 | ---- --- |
| | PS1, PS3 | 2096 375 | ---- --- |
| | PC1, PC2, PC3 | 1972 774 | ---- --- |
| | PY1 | 1972 775 | ---- --- |
| 1-48-309 | NUT, Rear Window Defroster Switch Mounting, PP1, PP2 | 1887 603 | ---- --- |
| | PD1, PD2, PD3, PD4, PS1, PS3 | 1972 548 | ---- --- |
| 1-48-334 | CLIP, Heater Hose Mounting, PP1, PP2, PD1, PD2, PD3, PD4 | ---- --- | 1272 820 |
| 1-48-365 | DOOR and LINKAGE, Fresh Air | 1830 632 | ---- --- |
| | DOOR and FRAME, Fresh Air, PY1 | 1830 633 | ---- --- |
| 1-48-388 | WASHER, Fresh Air Door Linkage Spring | 1152 315 | ---- --- |
| 1-48-389 | BOLT, Fresh Air Door Linkage Mounting | 1839 345 | ---- --- |
| 1-48-555 | HOSE, Heater, 50' Roll (as req'd) | 1315 466 | ---- --- |
| | Valve to Heater, Preformed, 29" lgh., except PC1, PC2, PY1 | 1595 160 | ---- --- |
| | Preformed, 46" lgh., PP2, PD1, PD2, PD4, PS1, PS3, PC3 | 2096 932 | ---- --- |
| | Heater to Pump, All except PP1, PD3 | 2096 932 | ---- --- |
| | PP1, PD3 | 2197 011 | ---- --- |
| | HOSE, Preformed, PP1, PP2, PD2, PD3, PD4 | ---- --- | 2197 902 |
| | HOSE, Heater Tube, Preformed, PP2, PD1, PD2, PD4, PS3, PC3 | 1779 885 | ---- --- |
| 1-48-572 | NIPPLE, Heater Hose Return | 1971 061 | ---- --- |
| | Return, PP1, PP2, PD1, PD2, PD3, PD4 | ---- --- | 1971 061 |
| | Inlet, PP1, PP2, PD1, PD2, PD3, PD4 | ---- --- | 1971 061 |
| | Outlet, PP2, PD1, PD2, PD4 | ---- --- | 1779 257 |
| 1-48-599 | MOTOR, Heater Blower | 2084 862 | ---- --- |
| | MOTOR, PP1, PP2, PD1, PD2, PD3, PD4 | ---- --- | 2197 906 |
| 1-48-607 | SPEED NUT, Heater Blower Motor Mounting | 1886 549 | ---- --- |
| 1-48-707 | DUCT, Heater Distribution | 1971 376 | ---- --- |
| 1-48-709 | CLIP, Heater Defroster Vacuum Actuator Shaft Retaining | 6008 144 | ---- --- |
| | Fresh Air Actuator | 6008 145 | ---- --- |
| 1-48-770 | SWITCH, Heater Control | 2096 083 | ---- --- |
| | PP1, PP2, PD1, PD2, PD3, PD4 | ---- --- | 2197 904 |
| 1-48-801 | KNOB, Heater Switch, PP1, PP2, PD1, PD2, PD3, PD4 | ---- --- | 1770 531 |



MyMopar.com

## 1-48-0 HOT WATER HEATER AND COMPONENT PARTS - Cont'd

| PART TYPE CODE | | MODEL 715 | MODEL 716 |
|---|---|---|---|
| 1-48-854 | VALVE, w/GASKET, Heater Temperature Control, except PY1 | 2084 461 | ---- --- |
| | PY1 | 2084 460 | ---- --- |
| | VALVE, Heater Shut-off, PP1, PP2, PD1, PD2, PD3, PD4 | ---- --- | 1925 096 |
| 1-48-886 | BRACKET, w/CABLE, Heater Control Lamp Socket, PC1, PC2, PC3 | 2197 001 | ---- --- |
| 1-48-941 | CABLE, w/HOUSING, Heater Temperature Control | 1819 748 | ---- --- |
| 1-48-942 | KNOB, w/Set SCREW, Heater Temperature Control, PP1, PP2, PD1, PD2, PD3, PD4, PS1, PS3 | 1971 216 | ---- --- |
| | PC1, PC2, PC3 | 1887 426 | ---- --- |
| | PY1 | 1971 150 | ---- --- |

| CODE | PART NAME AND DESCRIPTION | NO. OF CYL. | PLYMOUTH | DODGE | DESOTO | CHRYSLER AND IMPERIAL | PER CAR | PART NUMBER |
|---|---|---|---|---|---|---|---|---|
| **1-49-0** | **RECORD PLAYER PACKAGE, Hi-Fi** | | | | | | | |
| 1-49-1 | RECORD PLAYER PACKAGE | 6-8 | 60 | - | 60 | - | 1 | *2096 594 |
| 1-49-10 | MOUNTING BRACKET PACKAGE, Record Player, PP1, PP2, PP3 | 6-8 | 60 | - | - | - | 1 | 2097 301 |
| | PS1, PS3 | 8 | - | - | 60 | - | 1 | 2097 302 |
| **1-50-0** | **ELECTRIC WINDOW LIFT SAFETY SWITCH PACKAGE** | | | | | | | |
| 1-50-1 | PACKAGE, Window Switch | 6-8 | 60 | 60 | 60 | 60 | 1 | 2197 405 |
| **1-76-0** | **MIRROR** | | | | | | | |
| 1-76-1 | MIRROR, Outside Rear View, Single Strut | 6-8 | 60 | 60 | 60 | 60 | ★ | 1772 447 |
| | Twin Strut | 6-8 | 60 | 60 | 60 | 60 | ★ | 1773 071 |
| | Hooded Type, Single Strut | 6-8 | 60 | 60 | 60 | 60 | ★ | 1839 852 |
| | Remote Control, PC1, PC2, PC3 | 6-8 | 60 | 60 | 60 | 60 | ★ | 2084 787 |
| | PY1 | 8 | - | - | - | 60 | ★ | 2080 921 |
| | PACKAGE, Outside Rear View Mirror Double Strut, Passenger Side, Hooded Type | 6-8 | 60 | 60 | 60 | 60 | ★ | 2084 546 |
| 1-76-2 | MIRROR, Vanity | 6-8 | 60 | 60 | 60 | 60 | 1 | 1839 845 |
| 1-76-3 | PACKAGE, Inside Rear View, Mirror-Matic | 6-8 | 60 | 60 | 60 | 60 | 1 | 2161 079 |
| | MIRROR, Inside Rear View, Prismatic Stainless Steel | 6-8 | 60 | 60 | 60 | 60 | 1 | 1902 138 |
| 1-76-20 | HANDLE, Outside Rear View Mirror Remote Control, PC1, PC2, PC3 | 6-8 | 60 | 60 | 60 | 60 | 1 | 2080 721 |
| | PY1 | 8 | - | - | - | 60 | 1 | 2080 861 |
| 1-76-24 | NUT, Outside Rear View Mirror Cable to Instrument Panel | 6-8 | - | 60 | 60 | - | 1 | 2080 541 |
| | PC1, PC2, PC3 | 8 | - | - | - | 60 | 1 | 1901 838 |
| | PY1 | 6-8 | 60 | - | - | 60 | 1 | 2080 839 |
| **1-82-0** | **WINDSHIELD WASHER** | | | | | | | |
| 1-82-2 | WINDSHIELD WASHER PACKAGE, Model 22, PC1 | 6-8 | 60 | 60 | 60 | 60 | 1 | *2097 225 |
| 1-82-4 | RESERVOIR, w/Foot Pump, w/o Ram Manifold | 6-8 | 60 | 60 | - | - | 1 | 1972 368 |
| | w/Foot Pump, w/Ram Manifold | 8 | 60 | 60 | - | - | 1 | 2096 688 |
| | Push Button Pump | 8 | - | - | 60 | 60 | 1 | 2096 688 |
| 1-82-5 | TANK and BRACKET, Windshield Washer | 8 | - | - | 60 | 60 | 1 | 2096 822 |
| 1-82-6 | NOZZLE, Windshield Washer, w/o Base | 6-8 | 60 | 60 | 60 | 60 | 2 | 1887 321 |
| | PY1, w/BASE | 8 | - | - | - | 60 | 2 | 1887 319 |
| | w/HOUSING, except PY1 | 6-8 | 60 | 60 | 60 | 60 | 2 | 1971 857 |
| 1-82-8 | TEE, Windshield Washer Hose | 6-8 | 60 | 60 | - | - | 1 | 1523 160 |
| | | 8 | - | - | 60 | 60 | 1 | 1971 868 |


MyMopar.com

| CODE | PART NAME AND DESCRIPTION | NO. OF CYL. | PLYMOUTH | DODGE | DESOTO | CHRYSLER AND IMPERIAL | PER CAR | PART NUMBER |
|---|---|---|---|---|---|---|---|---|
| **1-82-0** | **WINDSHIELD WASHER - Cont'd** | | | | | | | |
| 1-82-14 | SWITCH, Windshield Washer Coordinator, w/Single Speed Wipers | 6-8 | 60 | 60 | - | - | 1 | 2097 183 |
| | PS1 | 8 | - | - | 60 | - | 1 | 1972 641 |
| | w/Variable Speed Wipers | 6-8 | 60 | - | - | - | 1 | 1886 832 |
| | | 8 | - | 60 | - | - | 1 | 2097 184 |
| | PC1, PC2, PC3 | 8 | - | - | 60 | 60 | 1 | 1971 660 |
| | PY1 | 8 | - | - | - | 60 | 1 | 2197 130 |
| | w/Washer Actuator, w/Single Speed Wipers | 8 | - | - | 60 | - | 1 | 2096 314 |
| | w/Variable Speed Wipers | 8 | - | - | 60 | - | 1 | 2096 231 |
| | PC1, PC2, PC3 | 8 | - | - | - | 60 | 1 | 1886 770 |
| | PY1 | 8 | - | - | - | 60 | 1 | 1886 769 |
| 1-82-15 | SCREW, Wiper Switch Mounting | 6-8 | 60 | 60 | - | - | 2 | 1819 251 |
| 1-82-22 | CAP, Fluid Container | 6-8 | 60 | 60 | - | - | 1 | 1838 001 |
| 1-82-23 | KNOB, Windshield Wiper and Washer Switch | 8 | - | - | 60 | - | 1 | 1887 874 |
| | PC1 | 8 | - | - | - | 60 | 1 | 1887 989 |
| 1-82-25 | PUMP, Windshield Washer Foot Control | 6-8 | 60 | 60 | - | - | 1 | 1887 148 |
| | Push Button Pump, w/COVER | 8 | - | - | 60 | 60 | 1 | 2096 686 |
| 1-82-28 | GROMMET, Windshield Washer Hose | 8 | - | - | 60 | 60 | 1 | 2097 815 |
| 1-82-30 | STRAINER, Windshield Washer | 6-8 | 60 | 60 | - | - | 1 | 1571 028 |
| 1-82-38 | VALVE, Check | 6-8 | 60 | 60 | - | - | 1 | 1880 222 |
| | ACTUATOR, Only | 6-8 | - | - | 60 | 60 | 1 | 1972 485 |
| 1-82-43 | BUTTON, W/CLIP, Windshield Washer Actuator | 8 | - | - | 60 | - | 1 | 1972 581 |
| | PC1 | 8 | - | - | - | 60 | 1 | 1972 512 |
| 1-82-44 | HOSE, Windshield Washer, 3/16" O.D., 127" lgh. | 6-8 | 60 | 60 | 60 | 60 | ★ | 2096 623 |
| | 9/32" O.D. 40" lgh. | 6-8 | 60 | 60 | 60 | 60 | ★ | ⊟2197 650 |
| | 13/32" O.D. 76" lgh. | 6-8 | 60 | 60 | 60 | 60 | ★ | ⊟2097 055 |
| | 13/32" O.D. 90" lgh. | 6-8 | 60 | 60 | 60 | 60 | ★ | ⊟2097 055 |
| 1-82-45 | CLIP, Actuator Button Mounting | 8 | - | - | 60 | 60 | 1 | 6000 176 |
| 1-82-48 | CONNECTOR, Vacuum Control, 2-Way, PC1 | 6-8 | 60 | 60 | 60 | 60 | 1 | 2121 942 |
| **1-87-0** | **RADIO** | | | | | | | |
| 1-87-2 | SPEAKER PACKAGE, w/SWITCH, Rear Shelf Radio | 6-8 | 60 | 60 | - | - | 1 | *1972 259 |
| | w/o Switch, PC1, PC2, PC3 | 8 | - | 60 | 60 | 60 | 1 | 1972 258 |
| 1-87-5 | SWITCH, Radio Foot Selector | 8 | - | - | - | 60 | 1 | 1819 409 |
| 1-87-6 | PLUG, Radio Control Foot Switch | 8 | - | - | - | 60 | 1 | 2086 634 |
| 1-87-21 | GRILLE, Rear Shelf Radio Speaker, Charcoal Gray | 6-8 | 60 | 60 | 60 | 60 | 1 | 1971 091 |
| 1-87-22 | BEZEL, Rear Shelf Speaker Grille, Charcoal Gray, except PY1 | 6-8 | 60 | 60 | 60 | 60 | 1 | 1819 014 |
| | Prime, except PY1 | 6-8 | 60 | 60 | 60 | 60 | 1 | 1819 011 |
| 1-87-45 | CABLE, Rear Shelf Radio Speaker | 6-8 | 60 | 60 | 60 | 60 | 1 | 1627 125 |
| 1-87-52 | CLIP, Radio Terminal and Fuse | 8 | - | - | - | 60 | 1 | 2197 136 |
| 1-87-70 | CAPACITOR, Radio Instrument Interference | 6-8 | 60 | - | - | - | 1 | 1972 760 |
| | CONDENSER, Generator Voltage Regulator (on battery terminal) | 6-8 | 60 | 60 | 60 | 60 | 1 | 1689 592 |
| | CONDENSER, Radio (on generator) | 6-8 | 60 | 60 | 60 | 60 | 1 | 1887 542 |
| 1-87-289 | SWITCH, Rear Shelf Radio Speaker Fader | 6-8 | 60 | 60 | - | - | 1 | 1819 889 |
| 1-87-404 | WIRING, Rear Shelf Radio Speaker | 6-8 | - | 60 | 60 | 60 | 1 | 1769 430 |
| 1-87-464 | HOLDER and FUSE, Radio | 6-8 | - | 60 | 60 | - | 1 | 1841 698 |
| **1-88-0** | **RADIO ANTENNA** | | | | | | | |
| 1-88-1 | PACKAGE, 60" Manual, Front, use with 100 Series Radio | 6-8 | 60 | 60 | - | - | 1 | 2096 038 |
| | Radio Antenna, Front, 60" Manual, PC1, PC2, PC3 | 6-8 | 60 | 60 | 60 | 60 | 1 | 1971 231 |
| | 60" Manual, Rear, Left, Single, except Sub. | 6-8 | - | 60 | - | - | 1 | 2097 413 |
| | 60" Manual, Rear, Right, PC1, PC2, PC3, except Sub. | 8 | - | - | 60 | 60 | 1 | 2096 219 |
| | 40" Manual, Dual Rear, PC1, PC2, PC3, except Sub. | 8 | - | - | 60 | 60 | 1 | 2096 204 |


MyMopar.com

## 1-88-0 RADIO ANTENNA - Cont'd

| CODE | PART NAME AND DESCRIPTION | NO. OF CYL. | PLYMOUTH | DODGE | DESOTO | CHRYSLER AND IMPERIAL | PER CAR | PART NUMBER |
|---|---|---|---|---|---|---|---|---|
| 1-88-1 | PACKAGE - Cont'd | | | | | | | |
| | 60" Motor Driven, Rear, Mounting, PC1, PC2, PC3, except Sub. | 8 | - | - | 60 | 60 | 1 | 1972 071 |
| | Motor Driven, Front, PY1 | 8 | - | - | - | 60 | 1 | 1971 247 |
| 1-88-6 | ADAPTER, Radio Antenna Front, w/100 Series Radio, Plastic Upper | 6-8 | 60 | 60 | 60 | - | 1 | 2096 632 |
| | Chrome Upper | 6-8 | 60 | 60 | - | - | 1 | 2096 053 |
| | ADAPTER, Radio Antenna Front Mounting Upper, PC1, PC2, PC3 | 6-8 | 60 | 60 | 60 | 60 | 1 | 1971 242 |
| | Lower, PC1, PC2, PC3 | 6-8 | 60 | 60 | 60 | 60 | 1 | 1971 241 |
| | ADAPTER, Radio Antenna Rear Mounting, Upper | 6-8 | - | 60 | - | - | 1 | 2097 397 |
| | Lower | 6-8 | - | 60 | - | - | 1 | 2097 398 |
| | Upper, PC1, PC2, PC3 | 8 | - | - | 60 | 60 | ★ | 1972 062 |
| | Lower, PC1, PC2, PC3 | 8 | - | - | 60 | 60 | ★ | 1972 061 |
| | ADAPTER, Motor Driven, Antenna Front Mounting, Upper, PY1 | 8 | - | - | - | 60 | 1 | 1769 446 |
| | Lower, PY1 | 8 | - | - | - | 60 | 1 | 1769 445 |
| 1-88-51 | COVER, Front Fender Antenna Hole, Right, PY1 | 8 | - | - | - | 60 | 1 | 1940 860 |
| 1-88-60 | CLIP, Radio Antenna Wire, PC1, PC2, PC3, Rear, except Sub. | 6-8 | - | 60 | 60 | 60 | ★ | 639 853 |
| 1-88-107 | GASKET, Antenna Adapter, use w/Front Upper Plastic Adapter | 6-8 | 60 | 60 | - | - | 1 | 2096 043 |
| | Use with Front Upper Chrome Adapter | 6-8 | 60 | 60 | - | - | 1 | 2096 055 |
| | Use with Rear Upper Adapter | 6-8 | - | 60 | - | - | 1 | 2097 405 |
| | GASKET, Antenna Upper Adapter, Rear, PC1, PC2, PC3, except Sub. | 8 | - | - | 60 | 60 | ★ | 1972 063 |
| 1-88-117 | MOTOR, Radio Antenna | 8 | - | - | 60 | 60 | 1 | 2097 310 |
| 1-88-118 | CIRCUIT BREAKER, Motor Driven Antenna, 8 amp., PC1, PC2, PC3 | 8 | - | - | - | 60 | 1 | 1642 477 |
| 1-88-119 | DRIVE, Motor Driven Antenna | 8 | - | - | 60 | 60 | 1 | 2198 855 |
| 1-88-120 | NUT, Cap, 1/2" - 24 | 6-8 | 60 | 60 | - | - | 1 | 2096 052 |
| | 9/16"-24 | 6-8 | 60 | 60 | - | - | 1 | 2096 041 |
| | 3/4"-32 | 8 | - | - | 60 | 60 | 1 | 1972 066 |
| 1-88-122 | CLIP, Motor Driven Antenna Circuit Breaker Mounting, PC1, PC2, PC3 | 8 | - | - | - | 60 | 1 | 6015 159 |
| 1-88-123 | NUT, Upper Adapter Mounting | 6-8 | 60 | 60 | 60 | 60 | ★ | 1658 328 |
| 1-88-159 | BODY and MAST, Manual, PC1, PC2, PC3 | 6-8 | 60 | 60 | 60 | 60 | ★ | 1886 713 |
| | MAST, Motor Driven Antenna, except Sub. | 8 | - | - | 60 | 60 | 1 | 2097 633 |
| 1-88-162 | CONNECTOR and Lead-In WIRE, Radio Antenna "Y", Motor Driven Rear Mtg., PC1, PC2, PC3, except Sub. | 8 | - | - | 60 | 60 | 1 | 1689 253 |
| | Manual, Right, Rear Single, PC1, PC2, PC3, except Sub. | 6-8 | - | - | 60 | 60 | 1 | 1779 072 |
| | Front, except Sub. | 6-8 | 60 | - | - | - | 1 | 1779 072 |
| 1-88-169 | EXTENSION, Antenna Lead-In | 6-8 | - | 60 | - | - | 1 | 2097 550 |
| 1-88-170 | COLLAR, Radio Antenna Grounding, use w/1971 231 Antenna, Front Mount, PC1, PC2, PC3, except Sub. | 6-8 | 60 | 60 | 60 | 60 | 1 | 1971 239 |
| | COLLAR, Adapter, use with 100 Series Radio | 6-8 | 60 | 60 | - | - | 1 | 2096 054 |
| | COLLAR, use w/2097 413 Antenna, Rear Mount | 6-8 | - | 60 | - | - | 1 | 2097 304 |
| | COLLAR, Radio Antenna Grounding, use w/2096 219 Antenna, Rear Mount, PC1, PC2, PC3, except Sub. | 8 | - | - | 60 | 60 | 1 | 1972 060 |
| 1-88-177 | PACKAGE, Antenna Lead-In Extension, except Sub. | 6-8 | 60 | - | - | - | 1 | 2197 148 |
| 1-88-180 | PACKAGE, Radio Antenna Shield, Manual | 6-8 | - | 60 | 60 | - | ★ | 1971 232 |
| | Export Only | 8 | - | - | - | 60 | ★ | 1971 232 |
| 1-88-205 | SWITCH, Motor Driven Radio Antenna. PC1, PC2, PC3, except Sub. | 8 | - | - | 60 | 60 | 1 | 1779 863 |
| | PC1, PC2, PC3, except Sub., Factory Installed | 8 | - | - | - | 60 | 1 | 1972 074 |
| 1-88-206 | NUT, Motor Driven Radio Antenna Switch Mounting, PC1, PC2, PC3, except Sub. | 8 | - | - | 60 | 60 | 2 | 1688 542 |



MyMopar.com

| CODE | PART NAME AND DESCRIPTION | NO. OF CYL. | PLYMOUTH | DODGE | DESOTO | CHRYSLER AND IMPERIAL | PER CAR | PART NUMBER |
|---|---|---|---|---|---|---|---|---|
| **1-108-0** | **SPOTLIGHT** | | | | | | | |
| 1-108-1 | PACKAGE, 5″ | 6-8 | 60 | 60 | 60 | 60 | 1 | *2198 354 |
| 1-108-2 | PACKAGE, Spotlight Mounting Bracket and Gasket, Outside Right, PC1, PC2, PC3 | 6-8 | 60 | 60 | 60 | 60 | 1 | 1818 918 |
| | Left, PC1, PC2, PC3 | 6-8 | 60 | 60 | 60 | 60 | 1 | 1818 917 |
| | Right, PY1 | 8 | - | - | - | 60 | 1 | 2198 726 |
| | Left, PY1 | 8 | - | - | - | 60 | 1 | 2198 727 |
| 1-108-5 | RING, 5″ | 6-8 | 60 | 60 | 60 | 60 | 1 | *1641 512 |
| 1-108-17 | BULB | 6-8 | 60 | 60 | 60 | 60 | 1 | 1661 046 |
| 1-108-28 | SWITCH | 6-8 | 60 | 60 | 60 | 60 | 1 | 1641 511 |
| 1-108-38 | TERMINAL | 6-8 | 60 | 60 | 60 | 60 | 1 | 665 151 |
| 1-108-49 | HOLDER, Spotlight Fuse | 6-8 | 60 | 60 | 60 | 60 | 1 | 1239 344 |
| **1-116-0** | **TIRE COVER** | | | | | | | |
| 1-116-2 | COVER, Tire, PC1, PC2, PC3 | 6-8 | 60 | 60 | 60 | 60 | 1 | 1843 027 |

## NOTES



MyMopar.com

# GROUP 2 - FRONT SUSPENSION

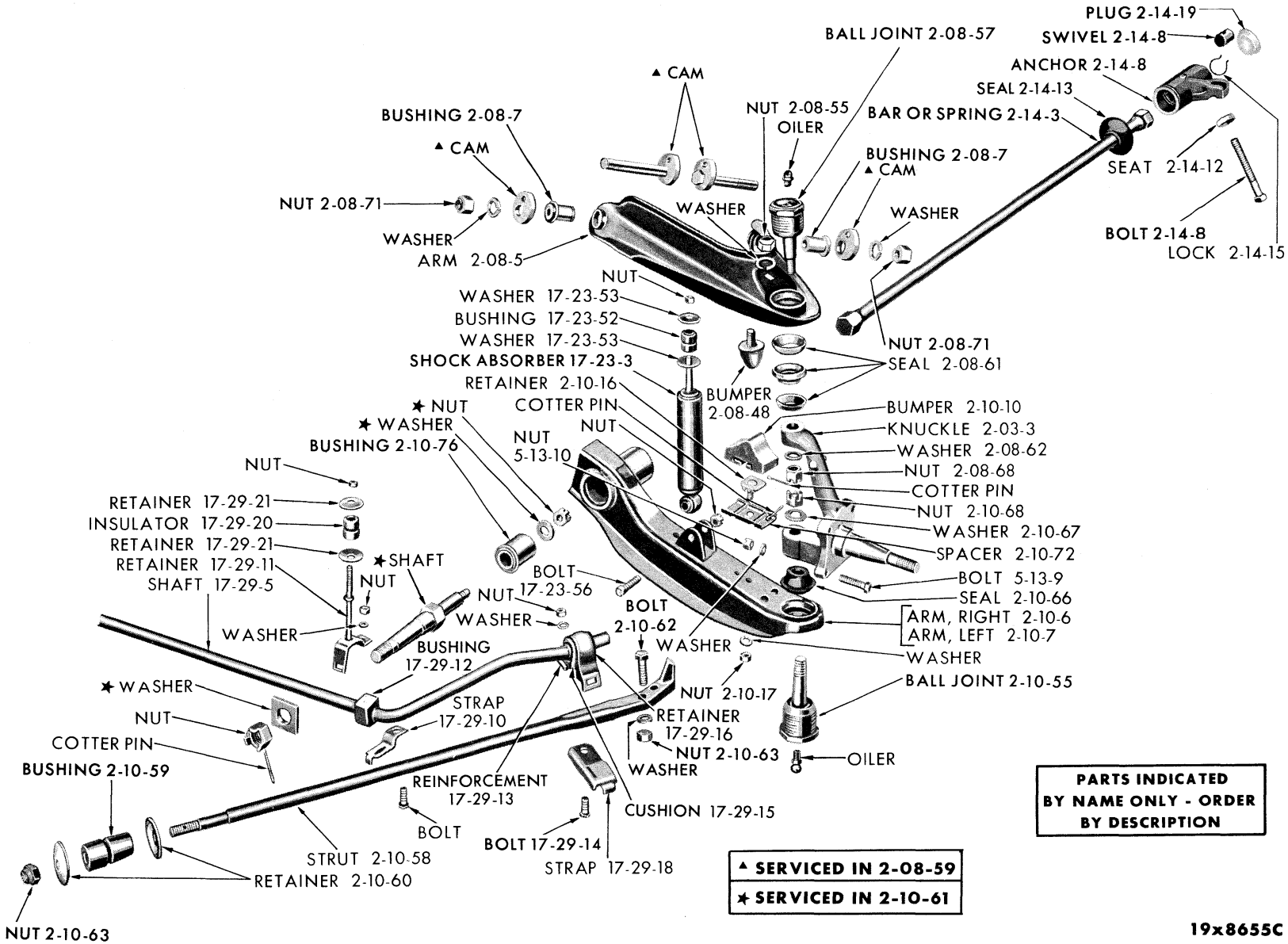


FRONT SUSPENSION

MyMopar.com

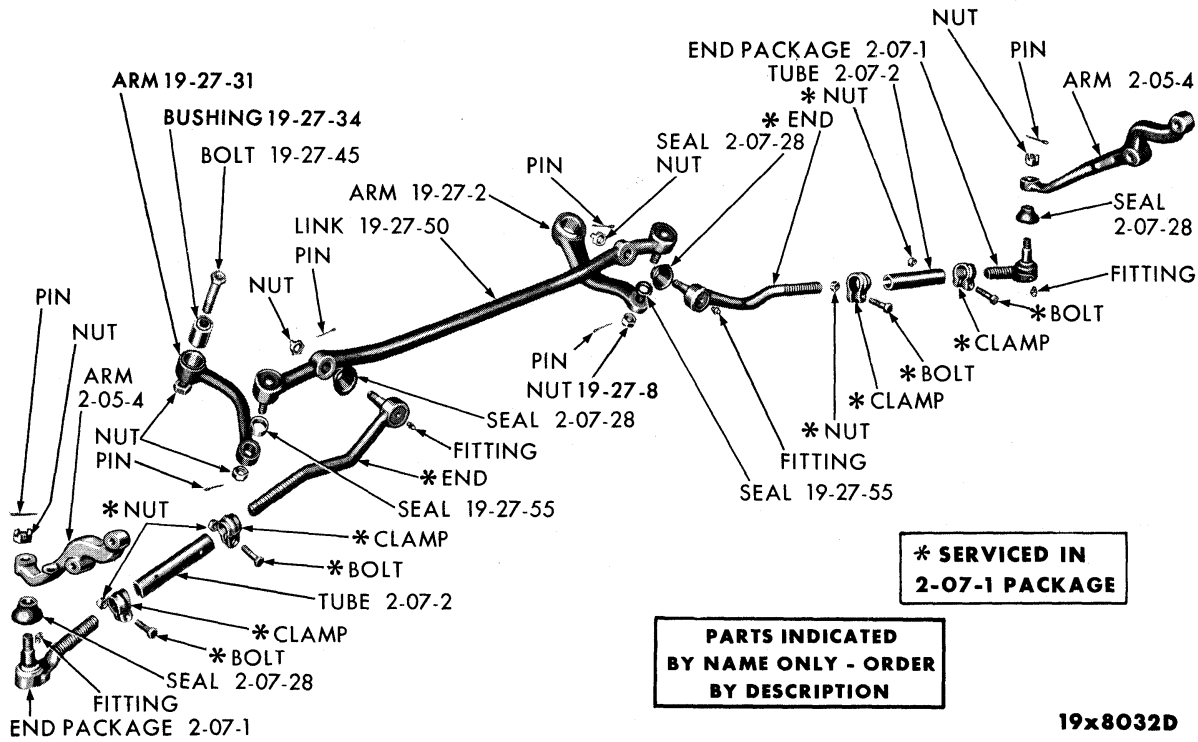


TIE RODS

## NOTES



MyMopar.com

# GROUP 2 - FRONT SUSPENSION

## 2-03-0 STEERING KNUCKLE

| CODE | PART NAME AND DESCRIPTION | NO. OF CYL. | PLYMOUTH | DODGE | DESOTO | CHRYSLER AND IMPERIAL | PER CAR | PART NUMBER |
|---|---|---|---|---|---|---|---|---|
| 2-03-3 | KNUCKLE, PC1 | 6-8 | 60 | 60 | 60 | 60 | 2 | 1671 362 |
| | PC2, PC3 | 8 | - | - | - | 60 | 2 | 1670 320 |
| | PY1 | 8 | - | - | - | 60 | 2 | 1671 363 |

## 2-05-0 STEERING LINKAGE KNUCKLE ARM

| | | | | | | | | |
|---|---|---|---|---|---|---|---|---|
| 2-05-4 | ARM, Right, PC1 | 6-8 | 60 | 60 | 60 | 60 | 1 | 1825 672 |
| | Left, PC1 | 6-8 | 60 | 60 | 60 | 60 | 1 | 1825 673 |
| | Right, PC2, PC3 | 8 | - | - | - | 60 | 1 | 1825 674 |
| | Left, PC2, PC3 | 8 | - | - | - | 60 | 1 | 1825 675 |
| | Right, PY1 | 8 | - | - | - | 60 | 1 | 1825 676 |
| | Left, PY1 | 8 | - | - | - | 60 | 1 | 1825 677 |

## 2-07-0 STEERING KNUCKLE TIE ROD

| | | | | | | | | |
|---|---|---|---|---|---|---|---|---|
| 2-07-1 | END PACKAGE, Inner, PC1 | 6-8 | 60 | 60 | 60 | 60 | 2 | 1818 999 |
| | Outer, PC1 | 6-8 | 60 | 60 | 60 | 60 | 2 | 2084 352 |
| | Right, Inner, PC2, PC3, PY1 | 8 | - | - | - | 60 | 1 | 1881 821 |
| | Left, Inner, PC2, PC3, PY1 | 8 | - | - | - | 60 | 1 | 1881 820 |
| | Outer, PC2, PC3, PY1 | 8 | - | - | - | 60 | 2 | 2084 353 |
| 2-07-2 | TUBE, w/CLAMP, Bolt and Nut | 6-8 | 60 | 60 | 60 | 60 | 2 | 1634 619 |
| 2-07-28 | SEAL, End Dust, PC1 | 6-8 | 60 | 60 | 60 | 60 | 4 | 1735 470 |
| | PC2, PC3, PY1 | 8 | - | - | - | 60 | 4 | 1673 045 |

## 2-08-0 FRONT WHEEL UPPER CONTROL ARM

| | | | | | | | | |
|---|---|---|---|---|---|---|---|---|
| 2-08-5 | ARM, Right, PC1 | 6-8 | 60 | 60 | 60 | 60 | 1 | 1825 306 |
| | Left, PC1 | 6-8 | 60 | 60 | 60 | 60 | 1 | 1825 307 |
| | Right, PC2, PC3, PY1 | 8 | - | - | - | 60 | 1 | 1825 664 |
| | Left, PC2, PC3, PY1 | 8 | - | - | - | 60 | 1 | 1825 665 |
| 2-08-7 | BUSHING, Upper Control Arm | 6-8 | 60 | 60 | 60 | 60 | 4 | 1825 317 |
| 2-08-48 | BUMPER, Frame | 6-8 | 60 | 60 | 60 | 60 | 2 | 1825 314 |
| 2-08-55 | NUT, Bumper Bolt | 6-8 | 60 | 60 | 60 | 60 | 2 | 6012 031 |
| 2-08-57 | BALL JOINT PACKAGE, PC1 | 6-8 | 60 | 60 | 60 | 60 | 2 | 2196 058 |
| | PC2, PC3, PY1 | 8 | - | - | - | 60 | 2 | 2084 252 |
| 2-08-59 | CAM and BUSHING PACKAGE, Support Bracket | 6-8 | 60 | 60 | 60 | 60 | 2 | 1881 652 |
| 2-08-61 | SEAL, Ball Joint, PC1 | 6-8 | 60 | 60 | 60 | 60 | 2 | 1825 487 |
| | Inner, PC2, PC3, PY1 | 8 | - | - | - | 60 | 2 | 1731 264 |
| | Outer, PC2, PC3, PY1 | 8 | - | - | - | 60 | 2 | 1734 266 |
| 2-08-62 | WASHER, Ball Joint Stud Nut | 6-8 | 60 | 60 | 60 | 60 | 2 | 1672 960 |
| 2-08-71 | NUT, Support Cam Bolt | 6-8 | 60 | 60 | 60 | 60 | 4 | 1825 449 |
| 2-08-75 | RETAINER, Ball Joint Outer Seal, PC1 | 6-8 | 60 | 60 | 60 | 60 | 2 | *1825 487 |
| | PC2, PC3, PY1 | 8 | - | - | - | 60 | 2 | *1734 267 |

## 2-10-0 FRONT WHEEL LOWER CONTROL ARM

| | | | | | | | | |
|---|---|---|---|---|---|---|---|---|
| 2-10-6 | ARM, Right, PC1 | 6-8 | 60 | 60 | 60 | 60 | 1 | 1825 138 |
| | Right, PC2, PC3, PY1 | 8 | - | - | - | 60 | 1 | 1824 974 |
| 2-10-7 | ARM, Left, PC1 | 6-8 | 60 | 60 | 60 | 60 | 1 | 1825 139 |
| | Left, PC2, PC3, PY1 | 8 | - | - | - | 60 | 1 | 1824 975 |
| 2-10-10 | BUMPER, Std., except Sub. | 6-8 | 60 | 60 | 60 | 60 | 2 | 1825 135 |
| | Std., Sub. | 6-8 | 60 | 60 | - | 60 | 2 | 1825 180 |
| | Heavy Duty | 6-8 | 60 | 60 | 60 | 60 | 2 | 1825 180 |
| 2-10-16 | RETAINER, Bumper, Std., except Sub. | 6-8 | 60 | 60 | 60 | 60 | 2 | 1825 136 |
| | Std., Sub. | 6-8 | 60 | 60 | - | 60 | 2 | 1825 137 |
| | Heavy Duty | 6-8 | 60 | 60 | 60 | 60 | 2 | 1825 137 |



MyMopar.com

| CODE | PART NAME AND DESCRIPTION | NO. OF CYL. | PLYMOUTH | DODGE | DESOTO | CHRYSLER AND IMPERIAL | PER CAR | PART NUMBER |
|---|---|---|---|---|---|---|---|---|
| **2-10-0** | **FRONT WHEEL LOWER CONTROL ARM - Cont'd** | | | | | | | |
| 2-10-17 | NUT, Bumper Retainer | 6-8 | 60 | 60 | 60 | 60 | 2 | 6012 031 |
| 2-10-55 | BALL JOINT PACKAGE, PC1 | 6-8 | 60 | 60 | 60 | 60 | 2 | 2196 059 |
| | PC2, PC3, PY1 | 8 | - | - | - | 60 | 2 | 2084 253 |
| 2-10-57 | BUSHING and RETAINER PACKAGE, Strut, PC1 | 6-8 | 60 | 60 | 60 | 60 | 2 | 2084 214 |
| | PC2, PC3, PY1 | 8 | - | - | - | 60 | 2 | 2084 045 |
| 2-10-58 | STRUT, Right, Std., PP1, PP2, PD1, PD2, PD3, PD4, PC1, except Sub., PS1, PS3, All. | 6-8 | 60 | 60 | 60 | 60 | 1 | 1731 402 |
| | Left, Std., PP1, PP2, PD1, PD2, PD3, PD4, PC1, except Sub., PS1, PS3, All | 6-8 | 60 | 60 | 60 | 60 | 1 | 1731 403 |
| | Right, Std., PP1, PP2, PD1, PD2, PD3, PD4, PC1, Sub. w/2 Seats | 6-8 | 60 | 60 | - | 60 | 1 | 1731 402 |
| | Left, Std., PP1, PP2, PD1, PD2, PD3, PD4, PC1, Sub. w/2 Seats | 6-8 | 60 | 60 | - | 60 | 1 | 1731 403 |
| | Right, PP1, PP2, PD1, PD2, PD3, PD4, PC1, Sub. w/3 Seats | 6-8 | 60 | 60 | - | 60 | 1 | 1671 418 |
| | Left, PP1, PP2, PD1, PD2, PD3, PD4, PC1, Sub. w/3 Seats | 6-8 | 60 | 60 | - | 60 | 1 | 1671 419 |
| | Right, PP1, PP2, PD1, PD2, PD4, PS1, PS3, PC1, use w/Sway Eliminator | 6-8 | 60 | 60 | 60 | 60 | 1 | 1671 418 |
| | Left, PP1, PP2, PD1, PD2, PD4, PS1, PS3, PC1, use w/Sway Eliminator | 6-8 | 60 | 60 | 60 | 60 | 1 | 1671 419 |
| | Right, PC2, PC3, PY1 | 8 | - | - | - | 60 | 1 | 1672 962 |
| | Left, PC2, PC3, PY1 | 8 | - | - | - | 60 | 1 | 1672 963 |
| 2-10-59 | BUSHING, Lower Control Arm Strut, PC1 | 6-8 | 60 | 60 | 60 | 60 | 2 | 1825 539 |
| | PC2, PC3, PY1 | 8 | - | - | - | 60 | 2 | 1734 321 |
| 2-10-60 | RETAINER, Strut Bushing | 6-8 | 60 | 60 | 60 | 60 | 4 | 1734 341 |
| 2-10-61 | SHAFT and BUSHING PACKAGE, PC1 | 6-8 | 60 | 60 | 60 | 60 | 2 | 1881 650 |
| | PC2, PC3, PY1 | 8 | - | - | - | 60 | 2 | 1881 647 |
| 2-10-62 | BOLT, Strut | 6-8 | 60 | 60 | 60 | 60 | 4 | 1825 350 |
| 2-10-63 | NUT, Strut Bolt, Rear | 6-8 | 60 | 60 | 60 | 60 | 4 | 1825 449 |
| | NUT, Strut Bushing, Front | 6-8 | 60 | 60 | 60 | 60 | 2 | 1825 432 |
| 2-10-66 | SEAL, Ball Joint, PC1 | 6-8 | 60 | 60 | 60 | 60 | 2 | 1825 488 |
| | PC2, PC3, PY1 | 8 | - | - | - | 60 | 2 | 1825 303 |
| 2-10-67 | WASHER, Ball Joint Stud Nut, PC1 | 6-8 | 60 | 60 | 60 | 60 | 2 | 1672 960 |
| | PC2, PC3, PY1 | 8 | - | - | - | 60 | 2 | 1672 961 |
| 2-10-68 | NUT, Ball Joint Stud, PC1 | 6-8 | 60 | 60 | 60 | 60 | 2 | 128 027 |
| | PC2, PC3, PY1 | 8 | - | - | - | 60 | 2 | 1671 405 |
| 2-10-72 | SPACER, Bumper, Std., PP1, PP2, PD1, PD2, PD3, PD4, PC1, PC3, Sub. | 6-8 | 60 | 60 | - | 60 | 2 | 1734 347 |
| | Heavy Duty | 6-8 | 60 | 60 | 60 | 60 | 2 | 1734 347 |
| 2-10-76 | BUSHING, Lower Control Arm Shaft, PC1 | 6-8 | 60 | 60 | 60 | 60 | 2 | *1636 017 |
| | PC2, PC3, PY1 | 8 | - | - | - | 60 | 2 | 1636 010 |
| **2-14-0** | **FRONT SUSPENSION TORSION PARTS** | | | | | | | |
| 2-14-1 | BOLT and SWIVEL PACKAGE, Bar or Spring Rear End Anchor Adjusting, PC1, PC2, PC3 | 6-8 | 60 (1) | 60 (1) | 60 (1) | 60 (1) | 2 | *2196 772 |
| | PC1, PC2, PC3 | 6-8 | 60 (2) | 60 (2) | 60 (2) | 60 (2) | 2 | ⊟2196 773 |
| | PY1 | 8 | - | - | - | 60 (1) | 2 | *2196 771 |
| | PY1 | 8 | - | - | - | 60 (2) | 2 | ⊟2196 774 |

NOTE: The anchor end of Torsion Bar or Springs are stamped with the last 3 digits of the part number. If the stamped number is 604, the torsion bar or spring will be applicable to the right side of the car since the last digit in the part number is an even number. Left side application is indicated by an odd digit.

| | | | | | | | | |
|---|---|---|---|---|---|---|---|---|
| 2-14-3 | BAR or SPRING, Right, Std., PP1, PD3, except Sub. | 6 | 60 | 60 | - | - | 1 | 1825 604 |
| | Left, Std., PP1, PD3, except Sub. | 6 | 60 | 60 | - | - | 1 | 1825 605 |
| | Right, Heavy Duty, PP1, PD3, except Sub. | 6 | 60 | 60 | - | - | 1 | 1825 606 |
| | Left, Heavy Duty, PP1, PD3, except Sub. | 6 | 60 | 60 | - | - | 1 | 1825 607 |
| | Right, Extreme Duty, PD3, PD4, except Sub. | 6-8 | 60 | 60 | - | - | 1 | 1825 608 |
| | Left, Extreme Duty, PD3, PD4, except Sub. | 6-8 | 60 | 60 | - | - | 1 | 1825 609 |

NOTE 1: Use on vehicles with 5/8" dia. anchor Bolt.

NOTE 2: Use on vehicles with 3/4" dia. anchor Bolt.



MyMopar.com

## 2-14-0 FRONT SUSPENSION TORSION PARTS - Cont'd

| CODE | PART NAME AND DESCRIPTION | NO. OF CYL. | PLYMOUTH | DODGE | DESOTO | CHRYSLER AND IMPERIAL | PER CAR | PART NUMBER |
|---|---|---|---|---|---|---|---|---|
| 2-14-3 | BAR or SPRING - Cont'd | | | | | | | |
| | Right, Std., PP1, PP2, PD1, PD2, PD3, PD4, Sub. w/2 Seats | 6-8 | 60 | 60 | - | - | 1 | 1825 610 |
| | Left, Std., PP1, PP2, PD1, PD2, PD3, PD4, Sub. w/2 Seats | 6-8 | 60 | 60 | - | - | 1 | 1825 611 |
| | Right, Std., PP1, PP2, PD1, PD2, PD3, PD4, Sub. w/3 Seats | 6-8 | 60 | 60 | - | - | 1 | 1825 604 |
| | Left, Std., PP1, PP2, PD1, PD2, PD3, PD4, Sub. w/3 Seats | 6-8 | 60 | 60 | - | - | 1 | 1825 605 |
| | Right, Heavy Duty, PP1, PP2, PD1, PD2, PD3, PD4, PC1, Sub. w/2 Seats | 6-8 | 60 | 60 | - | 60 | 1 | 1825 608 |
| | Left, Heavy Duty, PP1, PP2, PD1, PD2, PD3, PD4, PC1, Sub. w/2 Seats | 6-8 | 60 | 60 | - | 60 | 1 | 1825 609 |
| | Right, Heavy Duty, PP1, PP2, PD1, PD2, PD3, PD4, PC1, Sub. w/3 Seats | 6-8 | 60 | 60 | - | 60 | 1 | 1825 606 |
| | Left, Heavy Duty, PP1, PP2, PD1, PD2, PD3, PD4, PC1, Sub. w/3 Seats | 6-8 | 60 | 60 | - | 60 | 1 | 1825 607 |
| | Right, Std., PP2, PD1, PD2, PD4, except Sub., PS1, PS3, PC1, All | 8 | 60 | 60 | 60 | 60 | 1 | 1825 610 |
| | Left, Std., PP2, PD1, PD2, PD4, except Sub., PS1, PS3, PC1, All | 8 | 60 | 60 | 60 | 60 | 1 | 1825 611 |
| | Right, Heavy Duty, PP2, PD1, PD2, PD4, PC1, except Sub., PS1, PS3, All | 8 | 60 | 60 | 60 | 60 | 1 | 1825 608 |
| | Left, Heavy Duty, PP2, PD1, PD2, PD4, PC1, except Sub., PS1, PS3, All | 8 | 60 | 60 | 60 | 60 | 1 | 1825 609 |
| | Right, Std., w/Sway Eliminator, PP1, PD3, Sub., PP2, PD1, PD2, PD4, PS1, PS3, All | 6-8 | 60 | 60 | 60 | - | 1 | 1825 604 |
| | Left, Std., w/Sway Eliminator, PP1, PD3, Sub., PP2, PD1, PD2, PD4, PS1, PS3, All | 6-8 | 60 | 60 | 60 | - | 1 | 1825 605 |
| | Right, Heavy Duty, w/Sway Eliminator, PP2, PD1, PD2, PD4, PS1, PS3, PC1 | 8 | 60 | 60 | 60 | 60 | 1 | 1825 606 |
| | Left, Heavy Duty, w/Sway Eliminator, PP2, PD1, PD2, PD4, PS1, PS3, PC1 | 8 | 60 | 60 | 60 | 60 | 1 | 1825 607 |
| | Right, Std., PC2, PC3 | 8 | - | - | - | 60 | 1 | 1825 702 |
| | Left, Std., PC2, PC3 | 8 | - | - | - | 60 | 1 | 1825 703 |
| | Right, Heavy Duty, PC2, PC3 | 8 | - | - | - | 60 | 1 | 1825 706 |
| | Left, Heavy Duty, PC2, PC3 | 8 | - | - | - | 60 | 1 | 1825 707 |
| | Right, Std., PC3-300 | 8 | - | - | - | 60 | 1 | 1825 706 |
| | Left, Std., PC3-300 | 8 | - | - | - | 60 | 1 | 1825 707 |
| | Right, Std., PY1, w/SEAL | 8 | - | - | - | 60 | 1 | ⊟2275 508 |
| | Left, Std., PY1, w/SEAL | 8 | - | - | - | 60 | 1 | ⊟2275 509 |
| | Right, Heavy Duty, PY1, w/SEAL | 8 | - | - | - | 60 | 1 | ⊟2275 510 |
| | Left, Heavy Duty, PY1, w/SEAL | 8 | - | - | - | 60 | 1 | ⊟2275 511 |
| 2-14-8 | ANCHOR PACKAGE, Torsion Bar or Spring, Rear End, Right, PC1, PC2, PC3 | 6-8 | 60 (1) | 60 (1) | 60 (1) | 60 (1) | 1 | 2084 242 |
| | Left, PC1, PC2, PC3 | 6-8 | 60 (1) | 60 (1) | 60 (1) | 60 (1) | 1 | 2084 241 |
| | Right, PC1, PC2, PC3 | 6-8 | 60 (2) | 60 (2) | 60 (2) | 60 (2) | 1 | 2196 750 |
| | Left, PC1, PC2, PC3 | 6-8 | 60 (2) | 60 (2) | 60 (2) | 60 (2) | 1 | 2196 751 |
| | Right, PY1 except Cv.Cp. | 8 | - | - | - | 60 (1) | 1 | 2084 022 |
| | Left, PY1 except Cv.Cp. | 8 | - | - | - | 60 (1) | 1 | 2084 021 |
| | Right, PY1 except Cv.Cp. | 8 | - | - | - | 60 (2) | 1 | 2196 754 |
| | Left, PY1 except Cv.Cp. | 8 | - | - | - | 60 (2) | 1 | 2196 755 |
| | Right, PY1 Cv.Cp. | 8 | - | - | - | 60 (1) | 1 | 2084 020 |
| | Left, PY1 Cv.Cp. | 8 | - | - | - | 60 (1) | 1 | 2084 019 |
| | Right, PY1 Cv.Cp. | 8 | - | - | - | 60 (2) | 1 | 2196 752 |
| | Left, PY1 Cv.Cp. | 8 | - | - | - | 60 (2) | 1 | 2196 753 |
| 2-14-12 | SEAT, Bar or Spring Rear End Anchor Adjusting Bolt, PC1, PC2, PC3 | 6-8 | 60 (1) | 60 (1) | 60 (1) | 60 (1) | 2 | 1825 184 |
| | PY1 | 8 | - | - | - | 60 (1) | 2 | 1735 464 |
| | | 6-8 | 60 (2) | 60 (2) | 60 (2) | 60 (2) | 2 | 1857 549 |

NOTE 1: Use on vehicles with 5/8" dia. anchor Bolt.

NOTE 2: Use on vehicles with 3/4" dia. anchor Bolt.



MyMopar.com

| CODE | PART NAME AND DESCRIPTION | NO. OF CYL. | PLYMOUTH | DODGE | DESOTO | CHRYSLER AND IMPERIAL | PER CAR | PART NUMBER |
|---|---|---|---|---|---|---|---|---|
| **2-14-0** | **FRONT SUSPENSION TORSION PARTS - Cont'd** | | | | | | | |
| 2-14-13 | SEAL, Bar or Spring Rear End Anchor . . . . | 6-8 | 60 | 60 | 60 | 60 | 2 | 1613 388 |
| 2-14-15 | LOCK, Bar or Spring Rear End Anchor. . . . | 6-8 | 60 | 60 | 60 | 60 | 2 | 1639 171 |
| 2-14-19 | PLUG, Spring Rear End Anchor, PC1, PC2, PC3 | 8 | 60 | 60 | 60 | 60 | 2 | ⊟1857 580 |
| | PY1 . . . . . | 8 | - | - | - | 60 | 2 | ⊟1825 582 |
| 2-14-25 | RETAINER, Bar or Spring Rear End Anchor Adjusting Bolt, PY1 . . . . . | 8 | - | - | - | 60 | 2 | 1857 576 |
| **2-15-0** | **FRONT SUSPENSION REPAIR PACKAGES** | | | | | | | |
| 2-15-4 | BUSHING PACKAGE, Upper and Lower Control Arm, PC1 . . . . . | 6-8 | 60 | 60 | 60 | 60 | 2 | 1881 654 |
| | PC2, PC3, PY1 . . . . . | 8 | - | - | - | 60 | 2 | 1881 653 |

## NOTES

★ Indicates use as required. Numerals in parentheses ( ) refer to notes. Printed in U.S.A.
⊟ Indicates parts not listed in any previous parts book. Prices and specifications subject to change without notice.
April 20, 1960 Supersedes Dec. 30, 1959. Page 2-6 * Indicates change or addition.

MyMopar.com

# GROUP 3 - AXLE-REAR

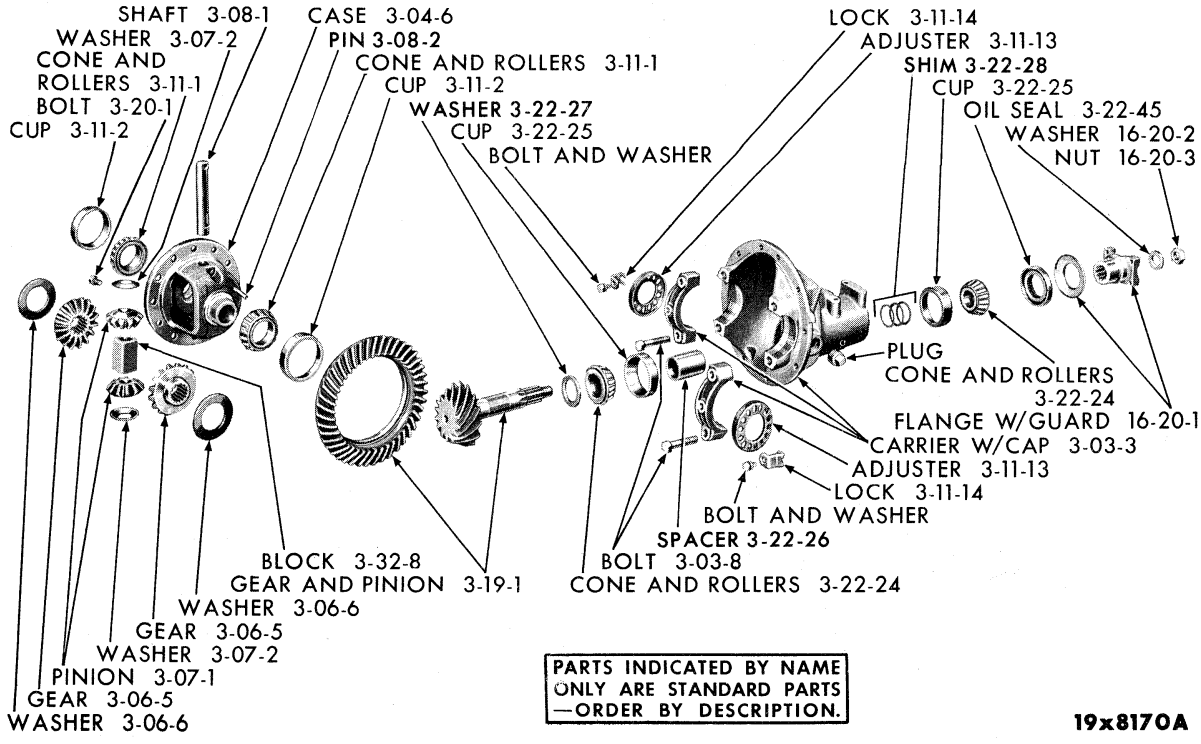


PARTS INDICATED BY NAME ONLY ARE STANDARD PARTS —ORDER BY DESCRIPTION.

19x8170A

REAR AXLE DIFFERENTIAL AND CARRIER

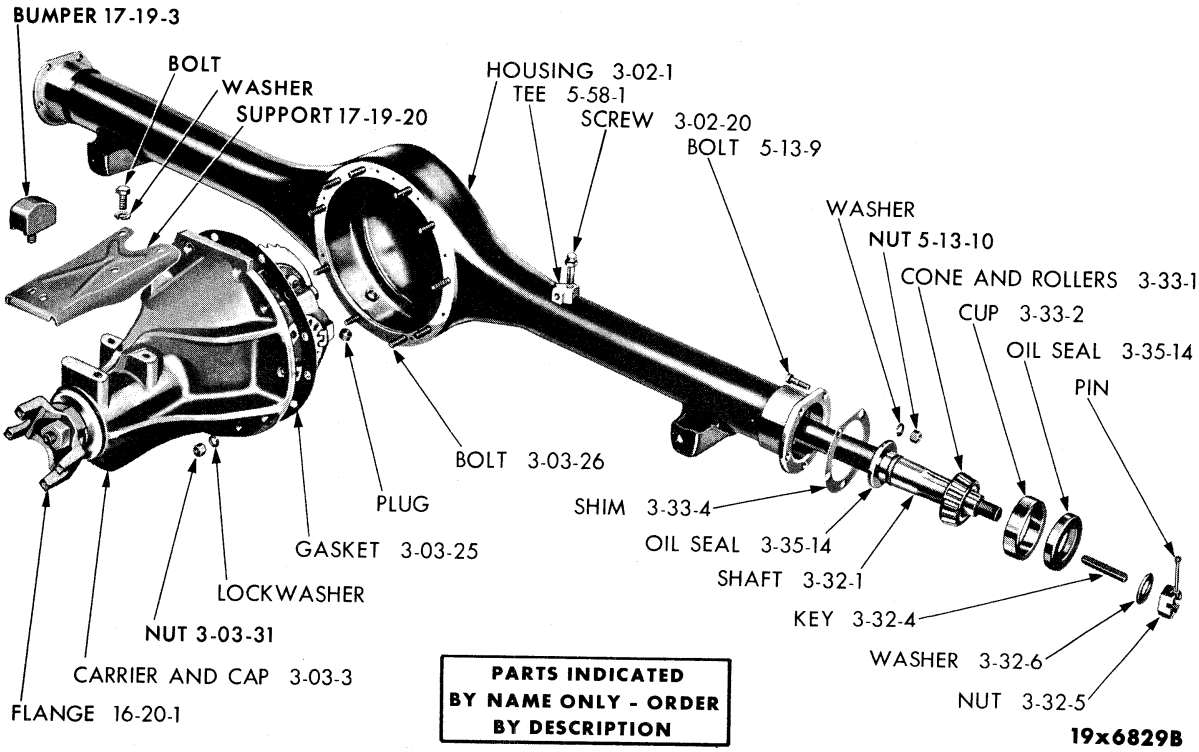


PARTS INDICATED BY NAME ONLY - ORDER BY DESCRIPTION

19x6829B

REAR AXLE HOUSING AND SHAFT



MyMopar.com

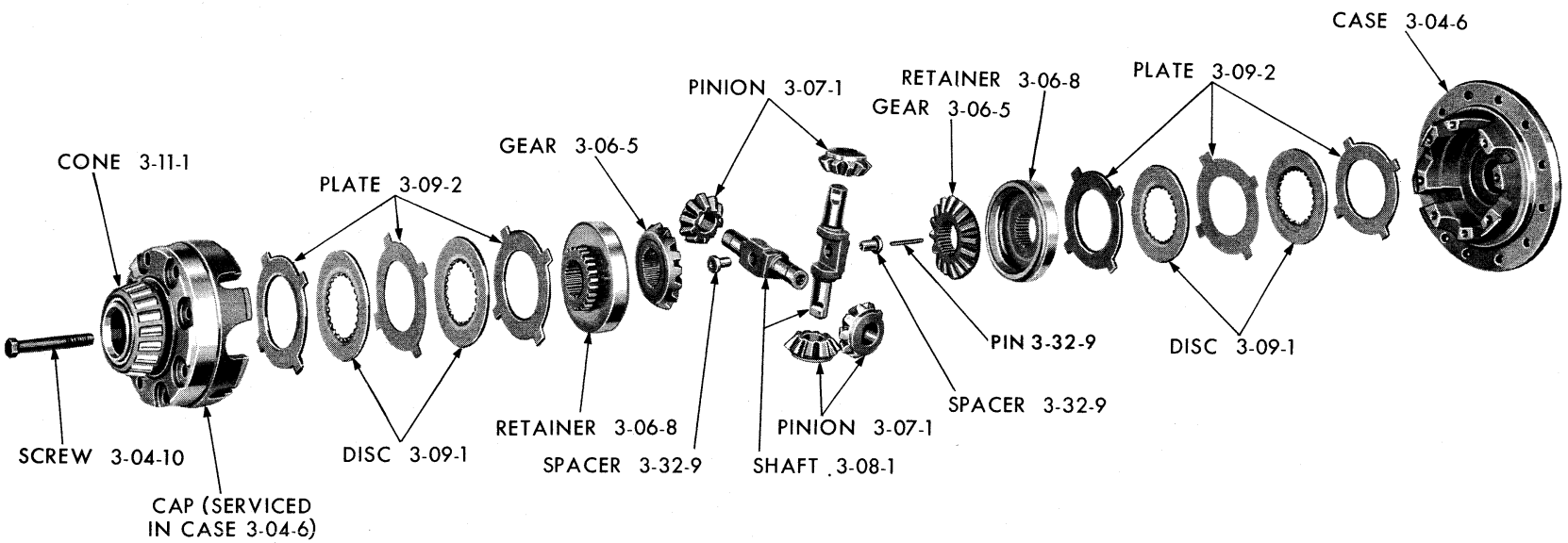


19x8320B

"SURE-GRIP" REAR AXLE DIFFERENTIAL

MyMopar.com

# GROUP 3 - AXLE-REAR

NOTE: PP1, PD3, 6 Cylinder.
Two types of rear axles have intermittently been used in production of the subject vehicles.

When specifying parts for these axles it is necessary to determine the overall diameter of the ring gear which will be 8 1/4" or 8 3/4".

The differential carrier is embossed with the number 1828 448 on cars equipped with 8 1/4" diameter ring gear and 1820 657 indicates an 8 3/4" diameter ring gear.

## 3-01-0 REAR AXLE CONTROL STRUT

| CODE | PART NAME AND DESCRIPTION | NO. OF CYL. | PLYMOUTH | DODGE | DESOTO | CHRYSLER AND IMPERIAL | PER CAR | PART NUMBER |
|---|---|---|---|---|---|---|---|---|
| 3-01-25 | STRUT, PY1 | 8 | - | - | - | 60 | 2 | 1730 160 |
| 3-01-28 | BUSHING, PY1 | 8 | - | - | - | 60 | 4 | 1635 600 |
| 3-01-30 | SPACER, PY1 | 8 | - | - | - | 60 | ★ | 1731 769 |
| 3-01-33 | HANGER, PY1 | 8 | - | - | - | 60 | 2 | 1731 738 |
| 3-01-34 | BOLT, Hanger, PY1 | 8 | - | - | - | 60 | 8 | 1731 789 |
| 3-01-35 | NUT, Bolt, PY1 | 8 | - | - | - | 60 | 8 | 1736 993 |

## 3-02-0 REAR AXLE HOUSING

| | | | | | | | | |
|---|---|---|---|---|---|---|---|---|
| 3-02-1 | HOUSING, w/8 1/4" dia. Gear | 6 | 60 | 60 | - | - | 1 | 1945 744 |
| | w/8 3/4" dia. Gear, PC1, PC2, PC3 | 6-8 | 60 | 60 | 60 | 60 | 1 | 1945 745 |
| | PY1 | 8 | - | - | - | 60 | 1 | 2070 231 |
| 3-02-20 | SCREW, Vent | 6-8 | 60 | 60 | 60 | 60 | 1 | 925 525 |

## 3-03-0 REAR AXLE DIFFERENTIAL AND CARRIER

| | | | | | | | | |
|---|---|---|---|---|---|---|---|---|
| 3-03-1 | DIFFERENTIAL, w/CARRIER, 3.73 to 1 ratio, w/8 1/4" dia. Gear | 6 | 60 | 60 | - | - | 1 | *1828 699 |
| | 3.31 to 1 ratio, w/8 1/4" dia. Gear | 6 | 60 | 60 | - | - | 1 | ⊟2070 262 |
| | 3.54 to 1 ratio, w/8 1/4" dia. Gear | 6 | 60 | 60 | - | - | 1 | *2070 249 |
| | 3.9 to 1 ratio, w/8 1/4" dia. Gear | 6 | 60 | 60 | - | - | 1 | *1828 700 |
| | 3.91 to 1 ratio, w/8 3/4" dia. Gear, PD4 | 6-8 | 60 | 60 | - | - | 1 | *1828 517 |
| | 2.93 to 1 ratio, w/8 3/4" dia. Gear, PD1, PD2, PD4 | 6-8 | 60 | 60 | 60 | 60 | 1 | *1829 338 |
| | 3.31 to 1 ratio, w/8 3/4" dia. Gear, PD1, PD2, PD4 | 6-8 | 60 | 60 | 60 | 60 | 1 | *1850 732 |
| | 3.31 to 1 ratio, w/8 3/4" dia. Gear, w/Sure-Grip, PD1, PD2, PD4, PC1, PC2, PC3 | 8 | - | 60 | 60 | 60 | 1 | *1850 758 |
| | 3.58 to 1 ratio, w/8 3/4" dia. Gear, PD1, PD4, PS1 | 6-8 | 60 | 60 | 60 | - | 1 | *2070 333 |
| | 3.73 to 1 ratio, w/8 3/4" dia. Gear | 6-8 | 60 | - | - | - | 1 | *1828 516 |
| | 2.93 to 1 ratio, w/8 3/4" dia. Gear, w/Sure-Grip, PD1, PD2, PD4, PS1 | 8 | 60 | 60 | 60 | 60 | 1 | *1829 496 |
| | 3.58 to 1 ratio, w/8 3/4" dia. Gear, PS1, PC1 | 6-8 | 60 | 60 | 60 | 60 | 1 | *2070 333 |
| | 3.58 to 1 ratio, w/8 3/4" dia. Gear, w/Sure-Grip, PD1, PD4 | 8 | 60 | 60 | - | - | 1 | *2070 340 |
| | 3.23 to 1 ratio, w/8 3/4" dia. Gear, w/Sure-Grip, PC1, PC2, PC3 | 8 | - | 60 | 60 | 60 | 1 | *2070 342 |
| | 3.23 to 1 ratio, w/8 3/4" dia. Gear, PD2, PS3 | 8 | - | 60 | 60 | 60 | 1 | *2070 335 |
| 3-03-2 | DIFFERENTIAL, Assembly, Partial, w/Sure-Grip | 8 | 60 | 60 | 60 | 60 | 1 | *1829 264 |
| 3-03-3 | CARRIER, w/CUPS, w/8 1/4" dia. Gear | 6 | 60 | 60 | - | - | 1 | *1828 447 |
| | w/8 3/4" dia. Gear and 1 3/8" dia. Stem, PD1, PD4, PS1 | 6-8 | 60 | 60 | 60 | - | 1 | *1820 698 |
| | w/8 3/4" dia. Gear and 1 3/4" dia. Stem | 8 | - | 60 | 60 | 60 | 1 | *1634 984 |
| | w/Sure-Grip, PD1, PD4, PS1 | 8 | - | 60 | 60 | - | 1 | *1634 984 |
| 3-03-8 | SCREW, Cap | 6-8 | 60 | 60 | 60 | 60 | 4 | * 314 948 |
| 3-03-25 | GASKET, w/8 1/4" dia. Gear | 6 | 60 | 60 | - | - | 1 | *1318 011 |
| | w/8 3/4" dia. Gear | 6-8 | 60 | 60 | 60 | 60 | 1 | *1673 367 |
| 3-03-26 | BOLT, Housing to Carrier | 6-8 | 60 | 60 | 60 | 60 | ★ | *1135 197 |
| 3-03-31 | NUT, Housing to Carrier Bolt | 6-8 | 60 | 60 | 60 | 60 | ★ | *1485 066 |
| | PY1 | 8 | - | - | - | 60 | 1 | *1940 596 |
| 3-03-31 | NUT, Housing to Carrier Bolt | 8 | - | - | - | 60 | 1 | *1940 596 |

★ Indicates use as required. Numerals in parentheses ( ) refer to notes. Printed in U.S.A.
⊟ Indicates parts not listed in any previous parts book. Prices and specifications subject to change without notice.
* Indicates change or addition.


Dec. 9, 1960 Supersedes April 20, 1960.
MyMopar.com

| CODE | PART NAME AND DESCRIPTION | NO. OF CYL. | PLYMOUTH | DODGE | DESOTO | CHRYSLER AND IMPERIAL | PER CAR | PART NUMBER |
|---|---|---|---|---|---|---|---|---|
| **3-04-0** | **DIFFERENTIAL CASE** | | | | | | | |
| 3-04-6 | CASE, w/8 1/4" dia. Gear, ALL except 4.1 to 1 ratio | 6 | 60 | 60 | - | - | 1 | *1485 093 |
| | w/8 1/4" dia. Gear, w/4.1 to 1 ratio | 6 | 60 | 60 | - | - | 1 | *1485 094 |
| | w/8 3/4" dia. Gear | 6-8 | 60 | 60 | 60 | 60 | 1 | *1850 370 |
| | w/Sure-Grip | 8 | 60 | 60 | 60 | 60 | 1 | *1945 749 |
| 3-04-10 | SCREW, Case Cap, w/Sure-Grip | 8 | 60 | 60 | 60 | 60 | 8 | *1945 751 |
| **3-06-0** | **DIFFERENTIAL SIDE GEAR** | | | | | | | |
| 3-06-5 | GEAR, w/8 1/4" dia. Gear | 6 | 60 | 60 | - | - | 2 | *2070 242 |
| | w/8 3/4" dia. Gear | 6-8 | 60 | 60 | 60 | 60 | 2 | ⊟2070 148 |
| | w/Sure-Grip | 8 | 60 | 60 | 60 | 60 | 2 | *1829 448 |
| 3-06-6 | WASHER, Thrust, w/8 1/4" dia. Gear | 6 | 60 | 60 | - | - | 2 | * 632 587 |
| | w/8 3/4" dia. Gear | 6-8 | 60 | 60 | 60 | 60 | 2 | *1633 960 |
| 3-06-8 | RETAINER, w/Sure-Grip | 8 | 60 | 60 | 60 | 60 | 2 | *1829 447 |
| **3-07-0** | **DIFFERENTIAL PINION** | | | | | | | |
| 3-07-1 | PINION, w/8 1/4" dia. Gear | 6 | 60 | 60 | - | - | 2 | *1326 219 |
| | w/8 3/4" dia. Gear | 6-8 | 60 | 60 | 60 | 60 | 2 | *1633 959 |
| | w/Sure-Grip | 8 | 60 | 60 | 60 | 60 | 2 | *1829 449 |
| 3-07-2 | WASHER, Thrust, w/8 1/4" dia. Gear | 6 | 60 | 60 | - | - | 2 | * 663 479 |
| | w/8 3/4" dia. Gear | 6-8 | 60 | 60 | 60 | 60 | 2 | *1633 961 |
| **3-08-0** | **DIFFERENTIAL PINION SHAFT** | | | | | | | |
| 3-08-1 | SHAFT, w/8 1/4" dia. Gear | 6 | 60 | 60 | - | - | 1 | *1142 006 |
| | w/8 3/4" dia. Gear | 6-8 | 60 | 60 | 60 | 60 | 1 | *1633 928 |
| | w/Sure-Grip | 8 | 60 | 60 | 60 | 60 | 2 | *1829 446 |
| | PIN, w/8 1/4" dia. Gear | 6 | 60 | 60 | - | - | 1 | * 141 232 |
| 3-08-2 | PIN, Lock, w/8 3/4" dia. Gear | 6-8 | 60 | 60 | 60 | 60 | 1 | *1633 937 |
| **3-09-0** | **REAR AXLE DIFFERENTIAL CLUTCH PARTS** | | | | | | | |
| 3-09-1 | DISC, Clutch, w/Sure-Grip | 8 | 60 | 60 | 60 | 60 | 4 | *1829 451 |
| 3-09-2 | PLATE, Clutch, w/Sure-Grip, .059" to .61" thk. | 8 | 60 | 60 | 60 | 60 | 2 | *1850 804 |
| | w/Sure-Grip, .088" to .093" thk. | 8 | 60 | 60 | 60 | 60 | ★ | ⊟1940 623 |
| | w/Sure-Grip, .094" to .096" thk. | 8 | 60 | 60 | 60 | 60 | 4 | *1829 450 |
| | w/Sure-Grip, .096" to .101" thk. | 8 | 60 | 60 | 60 | 60 | ★ | ⊟1940 624 |
| **3-11-0** | **DIFFERENTIAL BEARINGS** | | | | | | | |
| 3-11-1 | CONE, w/ROLLERS, w/8 1/4" dia. Gear | 6 | 60 | 60 | - | - | 2 | * 698 404 |
| | w/8 3/4" dia. Gear | 6-8 | 60 | 60 | 60 | 60 | 2 | *1790 523 |
| 3-11-2 | CUP | 6-8 | 60 | 60 | 60 | 60 | 2 | * 698 403 |
| 3-11-13 | ADJUSTER | 6-8 | 60 | 60 | 60 | 60 | 2 | * 601 864 |
| 3-11-14 | LOCK, Adjuster | 6-8 | 60 | 60 | 60 | 60 | 2 | * 308 247 |
| **3-19-0** | **DRIVE GEAR AND PINION SET** | | | | | | | |
| 3-19-1 | GEAR and PINION SET, 3.73 to 1 ratio, w/8 1/4" dia. Gear | 6 | 60 | 60 | - | - | 1 | *1567 900 |
| | 3.54 to 1 ratio, w/8 1/4" dia. Gear | 6 | 60 | 60 | - | - | 1 | *1124 304 |
| | 3.31 to 1 ratio, w/8 1/4" dia. Gear | 6 | 60 | 60 | - | - | 1 | *1634 973 |
| | 3.9 to 1 ratio, w/8 1/4" dia. Gear | 6 | 60 | 60 | - | - | 1 | *1141 541 |
| | 4.1 to 1 ratio, w/8 1/4" dia. Gear | 6 | 60 | 60 | - | - | 1 | *1567 835 |
| | 4.56 to 1 ratio, w/8 3/4" dia. Gear, Small Stem, PD4 | 6-8 | 60 | 60 | - | - | 1 | *1738 761 |
| | 2.93 to 1 ratio, w/8 3/4" dia. Gear, Small Stem, PD1, PD3, PD4, PS1 | 6-8 | 60 | 60 | 60 | - | 1 | *1828 440 |
| | 3.31 to 1 ratio, w/8 3/4" dia. Gear, Small Stem, PD1, PD3, PD4, PS1 | 6-8 | 60 | 60 | 60 | - | 1 | ⊟2070 298 |



MyMopar.com

| CODE | PART NAME AND DESCRIPTION | NO. OF CYL. | PLYMOUTH | DODGE | DESOTO | CHRYSLER AND IMPERIAL | PER CAR | PART NUMBER |
|---|---|---|---|---|---|---|---|---|
| **3-19-0** | **DRIVE GEAR AND PINION SET - Cont'd** | | | | | | | |
| 3-19-1 | GEAR and PINION SET - Cont'd | | | | | | | |
| | 3.54 to 1 ratio, w/8 3/4" dia. Gear, Small Stem, PD1, PD3, PD4, PS1 | 6-8 | 60 | 60 | 60 | - | 1 | *1673 379 |
| | 3.73 to 1 ratio, w/8 3/4" dia. Gear, Small Stem | 6-8 | 60 | - | - | - | 1 | *1673 380 |
| | 3.91 to 1 ratio, w/8 3/4" dia. Gear, Small Stem, PD3, PD4 | 6-8 | 60 | 60 | - | - | 1 | *1673 381 |
| | 4.1 to 1 ratio, w/8 3/4" dia. Gear, Small Stem, PD3, PD4 | 6-8 | 60 | 60 | - | - | 1 | *1673 382 |
| | 3.58 to 1 ratio, w/8 3/4" dia. Gear, Small Stem, PD1, PD3, PD4, PS1 | 6-8 | 60 | 60 | 60 | - | 1 | *2070 304 |
| | 3.58 to 1 ratio, w/Sure-Grip, PD1, PD4 | 8 | - | 60 | - | - | 1 | *2070 305 |
| | 3.58 to 1 ratio, w/8 3/4" dia. Gear, Large Stem, PD2, PC1 | 8 | - | 60 | - | 60 | 1 | *2070 305 |
| | 3.23 to 1 ratio, w/Sure-Grip, PD1, PD4, PS1 | 8 | - | 60 | 60 | - | 1 | *2070 329 |
| | 3.23 to 1 ratio, w/8 3/4" dia. Gear, Large Stem, PD2, PS3 | 8 | - | 60 | 60 | - | 1 | *2070 329 |
| | 2.93 to 1 ratio, w/8 3/4" dia. Gear, Large Stem, PD2, PS3 | 8 | - | 60 | 60 | - | 1 | ⊟2070 297 |
| | 2.93 to 1 ratio, w/Sure-Grip, PD1, PD4, PS1 | 8 | - | 60 | 60 | - | 1 | ⊟2070 297 |
| | 3.73 to 1 ratio, w/8 3/4" dia. Gear, Large Stem, PC3-C300F | 8 | - | - | - | 60 | 1 | *1673 388 |
| **3-20-0** | **DRIVE GEAR BOLT** | | | | | | | |
| 3-20-1 | BOLT, w/8 1/4" dia. Gear | 6 | 60 | 60 | - | - | 10 | * 663 481 |
| | w/8 3/4" dia. Gear | 6-8 | 60 | 60 | 60 | 60 | 12 | *1675 485 |
| | w/Sure-Grip | 8 | 60 | 60 | 60 | 60 | 12 | *1945 768 |
| 3-20-2 | LOCK, Nut | 6 | 60 | 60 | - | - | 5 | * 663 482 |
| **3-22-0** | **DRIVE PINION BEARINGS** | | | | | | | |
| 3-22-24 | CONE, Front Bearing, w/ROLLERS, w/1 3/8" dia. Stem, PD1, PD3, PD4, PS1 | 6-8 | 60 | 60 | 60 | - | 1 | *1820 552 |
| | w/1 3/4" dia. Stem, Front, PD2, PS3 | 8 | - | 60 | 60 | 60 | 1 | *1401 808 |
| | w/1 3/8" dia. Stem, Rear, PD1, PD3, PD4, PS1 | 6-8 | 60 | 60 | 60 | - | 1 | *1401 809 |
| | w/1 3/4" dia. Stem, Rear, PD2, PS3 | 8 | - | 60 | 60 | 60 | 1 | *1404 472 |
| | Front, w/Sure-Grip, PD1, PD4, PS1 | 8 | - | 60 | 60 | - | 1 | *1401 808 |
| | Rear, w/Sure-Grip, PD1, PD4, PS1 | 8 | - | 60 | 60 | - | 1 | *1404 472 |
| 3-22-25 | CUP, Front, w/1 3/8" Stem, PD1, PD3, PD4, PS1 | 6-8 | 60 | 60 | 60 | - | 1 | *1820 551 |
| | w/1 3/4" Stem, Front, PD2, PS3 | 8 | - | 60 | 60 | 60 | 1 | *1401 810 |
| | w/1 3/8" Stem, Rear, PD1, PD3, PD4, PS1. | 6-8 | 60 | 60 | 60 | - | 1 | *1401 810 |
| | w/1 3/4" Stem, Rear, PD2, PS3 | 8 | - | 60 | 60 | 60 | 1 | *1327 847 |
| | Front, w/Sure-Grip, PD1, PD4, PS1 | 8 | - | 60 | 60 | - | 1 | *1401 810 |
| | Rear, w/Sure-Grip, PD1, PD4, PS1 | 8 | - | 60 | 60 | - | 1 | *1327 847 |
| 3-22-26 | SPACER, Rear Bearing, PD1, PD3, PD4, PS1 | 6-8 | 60 | 60 | 60 | - | 1 | 1738 826 |
| 3-22-27 | WASHER, Rear Bearing, Small Stem Pinion, .084" thk., PD1, PD3, PD4, PS1 | 6-8 | 60 | 60 | 60 | - | ★ | *1738 794 |
| | .086" thk., PD1, PD3, PD4, PS1 | 6-8 | 60 | 60 | 60 | - | ★ | 1738 795 |
| | .088" thk., PD1, PD3, PD4, PS1 | 6-8 | 60 | 60 | 60 | - | ★ | 1738 796 |
| | .090" thk., PD1, PD3, PD4, PS1 | 6-8 | 60 | 60 | 60 | - | ★ | 1738 797 |
| | .092" thk., PD1, PD3, PD4, PS1 | 6-8 | 60 | 60 | 60 | - | ★ | 1738 798 |
| | .094" thk., PD1, PD3, PD4, PS1 | 6-8 | 60 | 60 | 60 | - | ★ | 1738 799 |
| | .096" thk., PD1, PD3, PD4, PS1 | 6-8 | 60 | 60 | 60 | - | ★ | 1738 800 |
| | .098" thk., PD1, PD3, PD4, PS1 | 6-8 | 60 | 60 | 60 | - | ★ | 1738 801 |
| | .100" thk., PD1, PD3, PD4, PS1 | 6-8 | 60 | 60 | 60 | - | ★ | 1738 802 |



MyMopar.com

| CODE | PART NAME AND DESCRIPTION | NO. OF CYL. | PLYMOUTH | DODGE | DESOTO | CHRYSLER AND IMPERIAL | PER CAR | PART NUMBER |
|---|---|---|---|---|---|---|---|---|
| **3-22-0** | **DRIVE PINION BEARINGS - Cont'd** | | | | | | | |
| 3-22-27 | WASHER - Cont'd | | | | | | | |
| | .084" thk., Large Stem Pinion, PD2, PS3 | 8 | - | 60 | 60 | 60 | ★ | *1738 812 |
| | .086" thk., PD2, PS3 | 8 | - | 60 | 60 | 60 | ★ | 1738 813 |
| | .088" thk., PD2, PS3 | 8 | - | 60 | 60 | 60 | ★ | 1738 814 |
| | .090" thk., PD2, PS3 | 8 | - | 60 | 60 | 60 | ★ | 1738 815 |
| | .092" thk., PD2, PS3 | 8 | - | 60 | 60 | 60 | ★ | 1738 816 |
| | .094" thk., PD2, PS3 | 8 | - | 60 | 60 | 60 | ★ | 1738 817 |
| | .096" thk., PD2, PS3 | 8 | - | 60 | 60 | 60 | ★ | 1738 818 |
| | .098" thk., PD2, PS3 | 8 | - | 60 | 60 | 60 | ★ | 1738 819 |
| | .100" thk., PD2, PS3 | 8 | - | 60 | 60 | 60 | ★ | 1738 820 |
| | .084" thk., w/Sure-Grip, PD1, PD4, PS1 | 8 | - | 60 | 60 | - | ★ | 1738 812 |
| | .086" thk., w/Sure-Grip, PD1, PD4, PS1 | 8 | - | 60 | 60 | - | ★ | 1738 813 |
| | .088" thk., w/Sure-Grip, PD1, PD4, PS1 | 8 | - | 60 | 60 | - | ★ | 1738 814 |
| | .090" thk., w/Sure-Grip, PD1, PD4, PS1 | 8 | - | 60 | 60 | - | ★ | 1738 815 |
| | .092" thk., w/Sure-Grip, PD1, PD4, PS1 | 8 | - | 60 | 60 | - | ★ | 1738 816 |
| | .094" thk., w/Sure-Grip, PD1, PD4, PS1 | 8 | - | 60 | 60 | - | ★ | 1738 817 |
| | .096" thk., w/Sure-Grip, PD1, PD4, PS1 | 8 | - | 60 | 60 | - | ★ | 1738 818 |
| | .098" thk., w/Sure-Grip, PD1, PD4, PS1 | 8 | - | 60 | 60 | - | ★ | 1738 819 |
| | .100" thk., w/Sure-Grip, PD1, PD4, PS1 | 8 | - | 60 | 60 | - | ★ | 1738 820 |
| 3-22-28 | SHIM, Front Bearing Adjusting, Small Stem Pinion, .010" thk., PD1, PD3, PD4, PS1 | 6-8 | 60 | 60 | 60 | - | ★ | *1820 701 |
| | .014" thk., PD1, PD3, PD4, PS1 | 6-8 | 60 | 60 | 60 | - | ★ | 1820 703 |
| | .016" thk., PD1, PD3, PD4, PS1 | 6-8 | 60 | 60 | 60 | - | ★ | 1820 704 |
| | .018" thk., PD1, PD3, PD4, PS1 | 6-8 | 60 | 60 | 60 | - | ★ | 1820 705 |
| | .024" thk., PD1, PD3, PD4, PS1 | 6-8 | 60 | 60 | 60 | - | ★ | 1829 440 |
| | .026" thk., PD1, PD3, PD4, PS1 | 6-8 | 60 | 60 | 60 | - | ★ | 1829 441 |
| | .010" thk., Large Stem Pinion, PD2, PS3 | 8 | - | 60 | 60 | 60 | ★ | *1738 803 |
| | .014" thk., PD2, PS3 | 8 | - | 60 | 60 | 60 | ★ | 1738 805 |
| | .016" thk., PD2, PS3 | 8 | - | 60 | 60 | 60 | ★ | 1738 806 |
| | .018" thk., PD2, PS3 | 8 | - | 60 | 60 | 60 | ★ | 1738 807 |
| | .022" thk., PD2, PS3 | 8 | - | 60 | 60 | 60 | ★ | 1829 442 |
| | .024" thk., PD2, PS3 | 8 | - | 60 | 60 | 60 | ★ | 1829 443 |
| | .026" thk., PD2, PS3 | 8 | - | 60 | 60 | 60 | ★ | 1829 444 |
| | .010" thk., w/Sure-Grip, PD1, PD4, PS1 | 8 | - | 60 | 60 | - | ★ | 1738 803 |
| | .014" thk., w/Sure-Grip, PD1, PD4, PS1 | 8 | - | 60 | 60 | - | ★ | 1738 805 |
| | .016" thk., w/Sure-Grip, PD1, PD4, PS1 | 8 | - | 60 | 60 | - | ★ | 1738 806 |
| | .018" thk., w/Sure-Grip, PD1, PD4, PS1 | 8 | - | 60 | 60 | - | ★ | 1738 807 |
| | .022" thk., w/Sure-Grip, PD1, PD4, PS1 | 8 | - | 60 | 60 | - | ★ | 1829 442 |
| | .024" thk., w/Sure-Grip, PD1, PD4, PS1 | 8 | - | 60 | 60 | - | ★ | 1829 443 |
| | .026" thk., w/Sure-Grip, PD1, PD4, PS1 | 8 | - | 60 | 60 | - | ★ | 1829 444 |
| 3-22-45 | OIL SEAL, Front Bearing, Small Stem Pinion, PD1, PD3, PD4, PS1 | 6-8 | 60 | 60 | 60 | - | 1 | *1738 831 |
| | Large Stem Pinion, PD2, PS3 | 8 | - | 60 | 60 | 60 | 1 | * 663 602 |
| | w/Sure-Grip, PD1, PD4, PS1 | 8 | - | 60 | 60 | - | 1 | 663 602 |
| **3-32-0** | **DRIVE SHAFT** | | | | | | | |
| 3-32-1 | SHAFT, 31 5/8" lgh., PD3, PD4 except Sp. 4 D. Sed. and Cv. Cp., also specify 1 of 1673 373 Oil Seal | 6-8 | 60 | 60 | - | - | 2 | 1675 448 |
| | 31 5/8" lgh., PD1, PD2, PD4 Sp. 4 D. Sed. and Cv. Cp., PC1, PC2, PC3 | 8 | - | 60 | 60 | 60 | 2 | 1675 448 |
| | 32 31/64" lgh., PY1 | 8 | - | - | - | 60 | 2 | 1675 449 |
| | w/Sure-Grip, 31 1/2" lgh., PC1, PC2, PC3 | 8 | 60 | 60 | 60 | 60 | 2 | 1829 266 |
| | w/Sure-Grip, 32 3/8" lgh., PY1 | 8 | - | - | - | 60 | 2 | 1829 267 |
| 3-32-4 | KEY | 6-8 | 60 | 60 | 60 | 60 | 2 | 1118 149 |
| 3-32-5 | NUT | 6-8 | 60 | 60 | 60 | 60 | 2 | 53 553 |
| 3-32-6 | WASHER | 6-8 | 60 | 60 | 60 | 60 | 2 | 50 652 |
| 3-32-8 | BLOCK, Thrust, 1 3/16" lgh., UP TO Cars | 6 | 60 | 60 | - | - | 1 | 651 402 |
| | 1 7/8" lgh., w/8 1/4" dia. Gear, AFTER Cars | 6 | 60 | 60 | - | - | 1 | *2070 243 |
| | w/8 3/4" dia. Gear | 6-8 | 60 | 60 | 60 | 60 | 1 | *1940 604 |
| 3-32-9 | SPACER, Thrust Block, UP TO Cars | 6 | 60 | 60 | - | - | 2 | 663 607 |
| | w/Sure-Grip | 8 | 60 | 60 | 60 | 60 | 2 | 1829 445 |
| | PIN, w/Sure-Grip | 8 | 60 | 60 | 60 | 60 | 1 | 273 703 |



MyMopar.com

| CODE | PART NAME AND DESCRIPTION | NO. OF CYL. | PLYMOUTH | DODGE | DESOTO | CHRYSLER AND IMPERIAL | PER CAR | PART NUMBER |
|---|---|---|---|---|---|---|---|---|
| **3-33-0** | **DRIVE SHAFT BEARINGS** | | | | | | | |
| 3-33-1 | CONE, w/ROLLERS, PC1, PC2, PC3 | 6-8 | 60 | 60 | 60 | 60 | 2 | 698 400 |
| | PY1 | 8 | - | - | - | 60 | 2 | 1673 375 |
| 3-33-2 | CUP, PC1, PC2, PC3 | 6-8 | 60 | 60 | 60 | 60 | 2 | 698 399 |
| | PY1 | 8 | - | - | - | 60 | 2 | 1188 715 |
| 3-33-4 | SHIM, .005" thk. | 6-8 | 60 | 60 | 60 | 60 | ★ | 1137 203 |
| | .012" thk. | 6-8 | 60 | 60 | 60 | 60 | ★ | 681 320 |
| | .030" thk. | 6-8 | 60 | 60 | 60 | 60 | ★ | 681 322 |
| **3-35-0** | **DRIVE SHAFT OIL SEAL** | | | | | | | |
| 3-35-14 | OIL SEAL, Bearing, 1 3/8" I.D., Inner, PD3, PD4 except Sp. 4 D. Sed. and Cv. Cp. | 6-8 | 60 | 60 | - | - | 2 | 1139 896 |
| | 1 1/2" I.D., Inner, PD1, PD2, PD4 Sp. 4 D. Sed. and Cv. Cp. | 8 | - | 60 | 60 | 60 | 2 | 1673 373 |
| | w/Sure-Grip, 1 1/2" I.D., Inner, PD4 except Sp. 4 D. Sed. and Cv. Cp. | 8 | 60 | 60 | - | - | 2 | 1673 373 |
| | Outer, PC1, PC2, PC3 | 6-8 | 60 | 60 | 60 | 60 | 2 | 1402 443 |
| | Outer, PY1 | 8 | - | - | - | 60 | 2 | 1673 838 |

## NOTES



MyMopar.com

| CODE | PART NAME AND DESCRIPTION | NO. OF CYL. | PLYMOUTH | DODGE | DESOTO | CHRYSLER AND IMPERIAL | PER CAR | PART NUMBER |
|---|---|---|---|---|---|---|---|---|

## NOTES



MyMopar.com

# GROUP 4 - BRAKE-PARKING

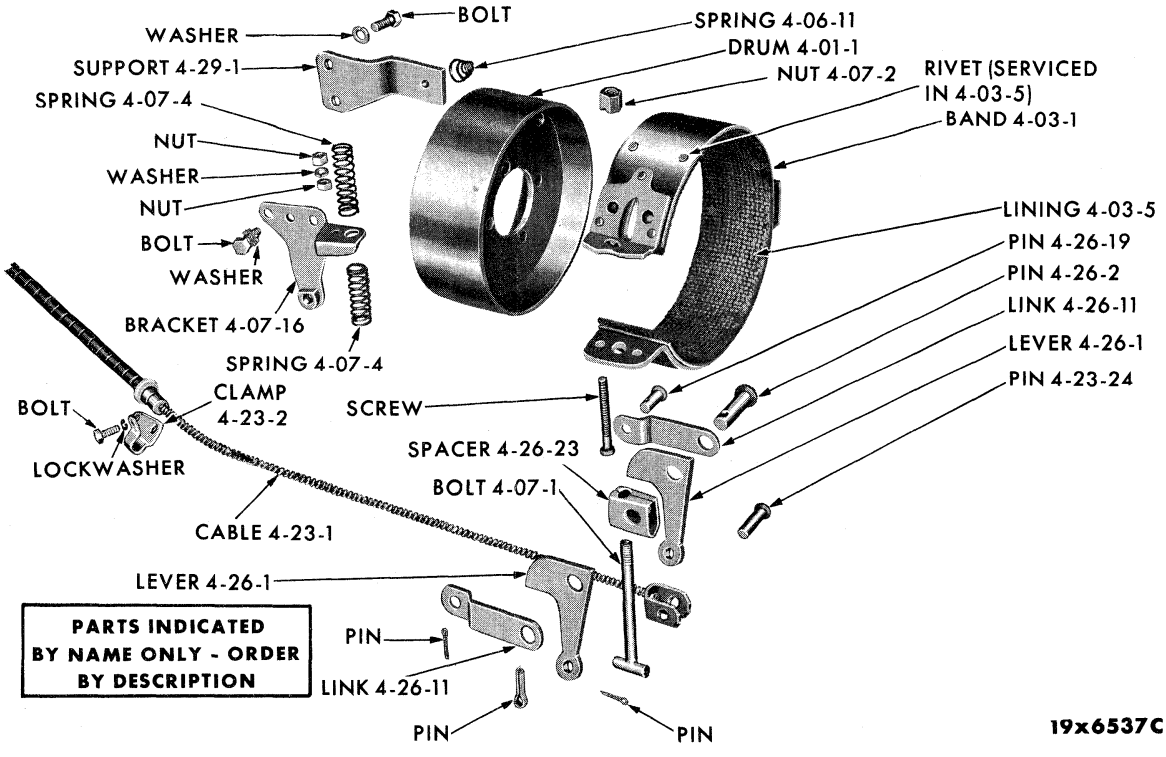


PARKING BRAKE - EXTERNAL TYPE

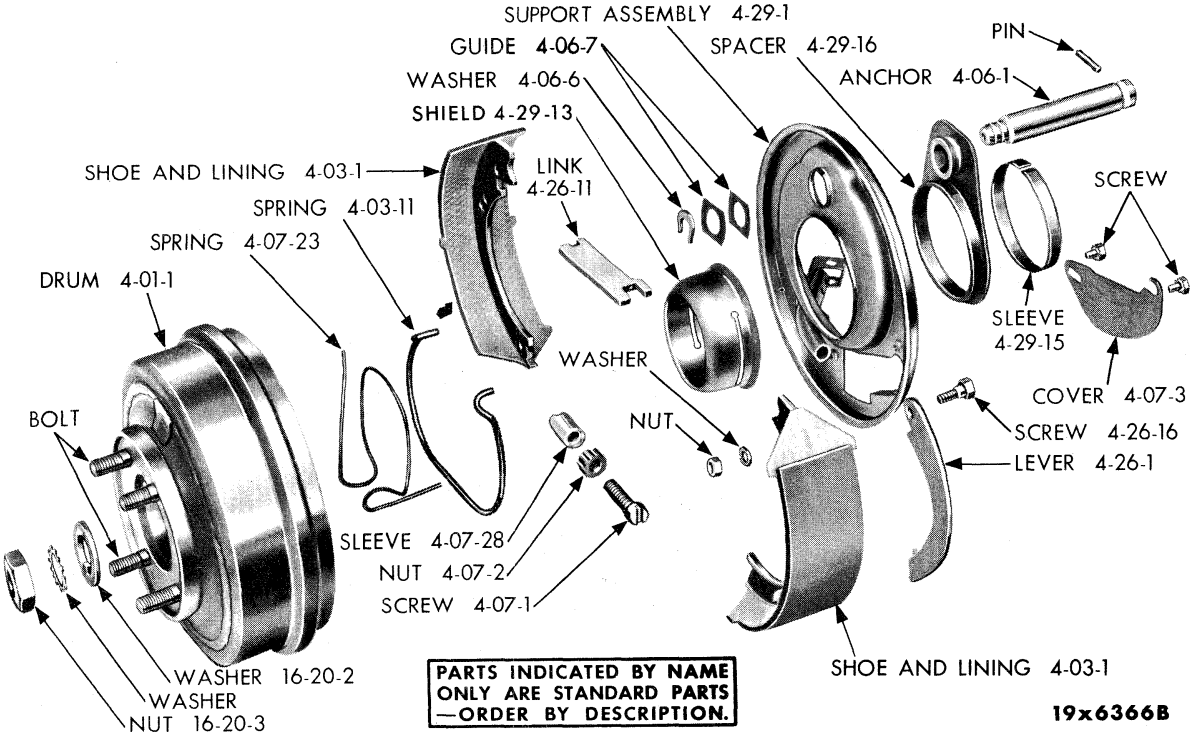


PARKING BRAKE - INTERNAL TYPE



MyMopar.com

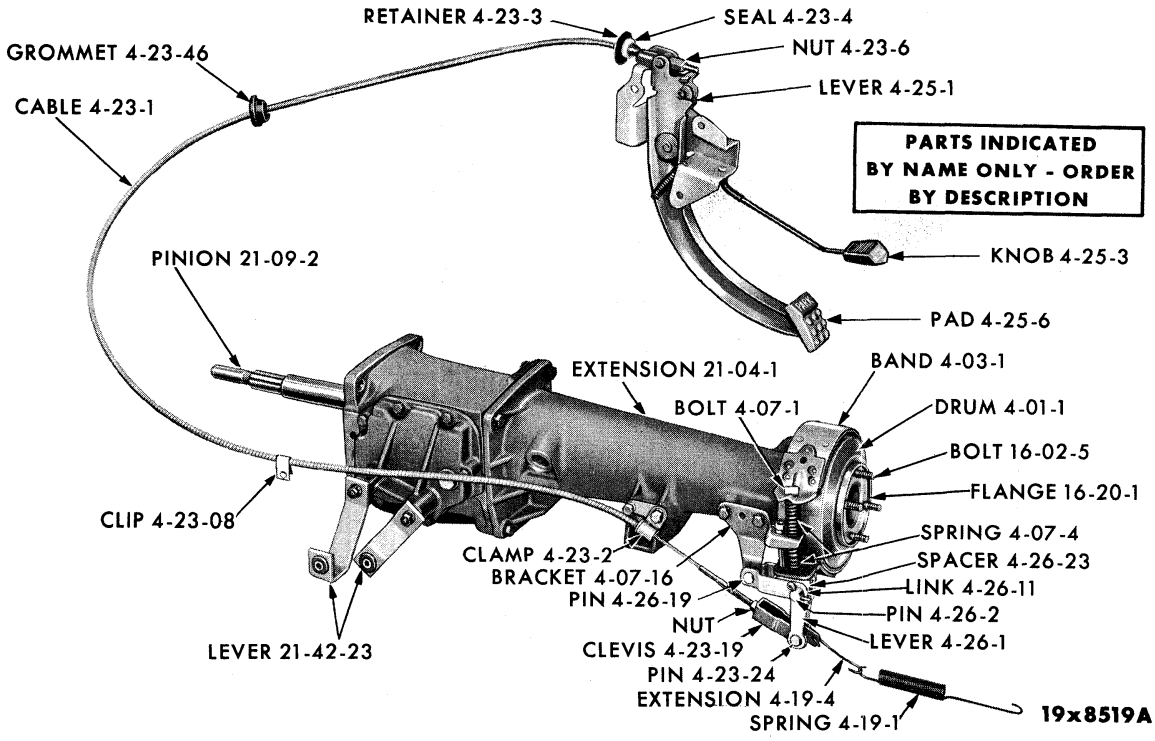


PARKING BRAKE - WITH STANDARD TRANSMISSION

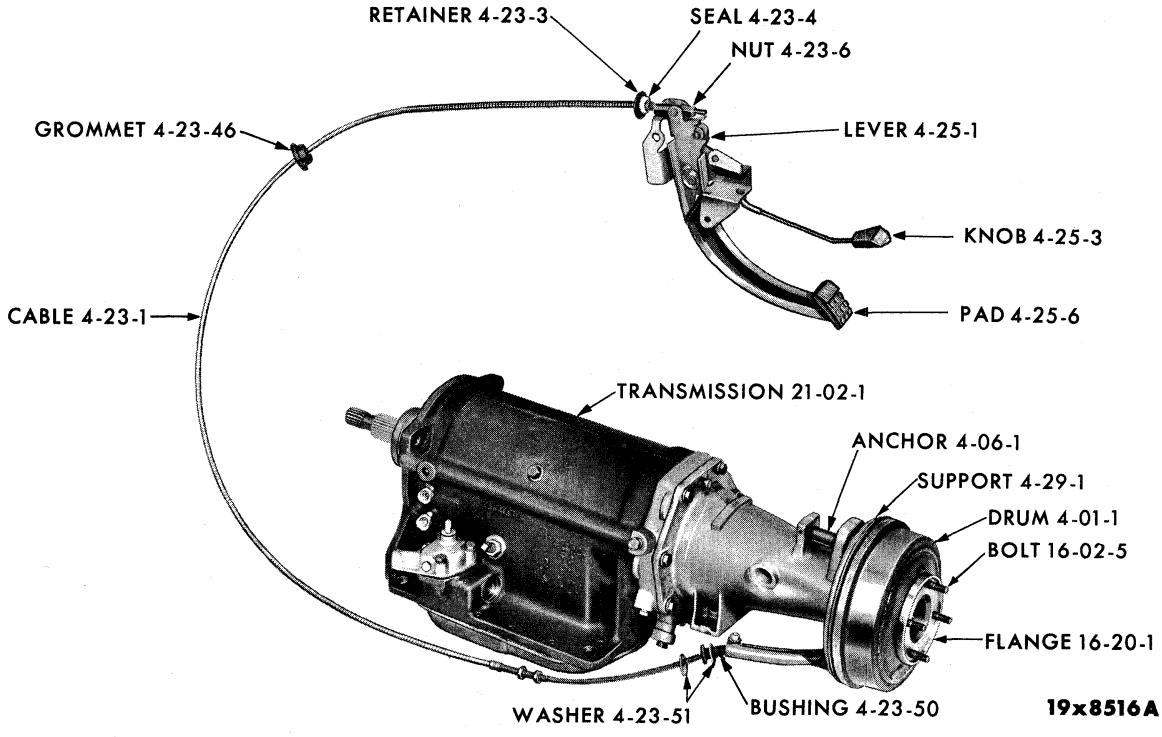


PARKING BRAKE - WITH AUTOMATIC TRANSMISSION



MyMopar.com

# GROUP 4 - BRAKE-PARKING

| CODE | PART NAME AND DESCRIPTION | NO. OF CYL. | PLYMOUTH | DODGE | DESOTO | CHRYSLER AND IMPERIAL | PER CAR | PART NUMBER |
|---|---|---|---|---|---|---|---|---|
| **4-01-0** | **PARKING BRAKE DRUM** | | | | | | | |
| 4-01-1 | DRUM, w/Auto. 3 Speed Trans., PP1, PD3 . . | 6 | 60 | 60 | - | - | 1 | ⊟1949 671 |
| | w/o Damper, w/Std. Trans., PD1, PD3, PD4. | 6-8 | 60 | 60 | - | - | 1 | 1946 466 |
| | w/DAMPER, w/Std. Trans., PD1, PD4, PS1 . | 6-8 | 60 | 60 | 60 | - | 1 | *1850 163 |
| | w/o Damper, w/Std. Trans., PD1, PS1 . . . . | 8 | - | 60 | 60 | - | 1 | *1326 789 |
| | w/PowerFlite, PD3, PD4 . . . . . | 6-8 | 60 | 60 | - | - | 1 | 1857 034 |
| | w/Std. Trans., PP2 High Performance, PD2 . | 8 | 60 | 60 | - | - | 1 | 1944 242 |
| | w/PowerFlite, PD1, PD2, PS1 . . . . . | 8 | - | 60 | 60 | - | 1 | 1944 242 |
| | w/Auto. 3 Speed Trans. . . . . | 8 | 60 | 60 | 60 | 60 | 1 | 1857 032 |
| **4-03-0** | **PARKING BRAKE BAND** | | | | | | | |
| 4-03-1 | BAND, w/LINING, w/Std. Trans., PD1, PD3, PD4, PS1 . . . . . | 6-8 | 60 | 60 | 60 | - | 1 | 863 146 |
| 4-03-5 | LINING PACKAGE, Brake Band, w/RIVETS, w/Std. Trans., PD1, PD3, PD4, PS1 . . . . . | 6-8 | 60 | 60 | 60 | - | 1 | 1843 179 |
| 4-03-6 | PACKAGE, Shoe and Lining, w/Std. Trans., PP2 High Performance, PD2 . . . . . | 8 | 60 | 60 | - | - | 1 | 2084 230 |
| | w/PowerFlite and Auto. 3 Speed Trans. . . . | 6-8 | 60 | 60 | 60 | 60 | 1 | 2084 230 |
| 4-03-8 | SHOE, w/PowerFlite and Auto. 3 Speed Trans. | 6-8 | 60 | 60 | 60 | 60 | 2 | ⊟2122 214 |
| 4-03-11 | SPRING, Shoe Return, w/Std. Trans., PP2 High Performance, PD2 . . . . . | 8 | 60 | 60 | - | - | 1 | 1403 611 |
| | w/PowerFlite and Auto. 3 Speed Trans. . . . | 6-8 | 60 | 60 | 60 | 60 | 1 | 1403 611 |
| **4-06-0** | **PARKING BRAKE SHOE ANCHOR** | | | | | | | |
| 4-06-1 | ANCHOR, w/Std. Trans., PP2 High Performance, PD2 . . . . . | 8 | 60 | 60 | - | - | 1 | 1488 884 |
| | w/PowerFlite and Auto. 3 Speed Trans. . . . | 6-8 | 60 | 60 | 60 | 60 | 1 | 1488 884 |
| 4-06-3 | SCREW, Anchor, w/Std. Trans., PD1, PD3, PD4, PS1 . . . . . | 6-8 | 60 | 60 | 60 | - | 1 | 665 454 |
| 4-06-6 | WASHER, w/Std. Trans., PP2 High Performance, PD2 . . . . . | 8 | 60 | 60 | - | - | 1 | 600 983 |
| | w/PowerFlite and Auto. 3 Speed Trans. . . . | 6-8 | 60 | 60 | 60 | 60 | 1 | 600 983 |
| 4-06-7 | GUIDE, w/Std. Trans., PP2 High Performance, PD2 . . . . . | 8 | 60 | 60 | - | - | 2 | 1403 574 |
| | w/PowerFlite and Auto. 3 Speed Trans. . . . | 6-8 | 60 | 60 | 60 | 60 | 2 | 1403 574 |
| 4-06-11 | SPRING, w/Std. Trans., PD1, PD3, PD4, PS1 . . | 6-8 | 60 | 60 | 60 | - | 1 | 855 274 |
| **4-07-0** | **PARKING BRAKE ADJUSTER** | | | | | | | |
| 4-07-1 | BOLT, w/Std. Trans., PD1, PD3, PD4, PS1 . . . | 6-8 | 60 | 60 | 60 | - | 1 | 1325 701 |
| | SCREW, w/Std. Trans., PP2 High Performance, PD2 . . . . . | 8 | 60 | 60 | - | - | 1 | 1314 478 |
| | w/PowerFlite and Auto. 3 Speed Trans. . . . | 6-8 | 60 | 60 | 60 | 60 | 1 | 1314 478 |
| 4-07-2 | NUT, Adjusting Bolt, w/Std. Trans., PD1, PD3, PD4 . . . . . | 6-8 | 60 | 60 | - | - | 1 | 852 429 |
| | Shoe Adjusting, w/Std. Trans., PP2 High Performance, PD2 . . . . . | 8 | 60 | 60 | - | - | 1 | 1314 477 |
| | w/PowerFlite and Auto. 3 Speed Trans. . . . | 6-8 | 60 | 60 | 60 | 60 | 1 | 1314 477 |
| 4-07-3 | COVER, Adjusting Screw, w/Std. Trans., PP2 High Performance, PD2 . . . . . | 8 | 60 | 60 | - | - | 1 | 1317 858 |
| | w/PowerFlite and Auto. 3 Speed Trans. . . . | 6-8 | 60 | 60 | 60 | 60 | 1 | 1317 858 |
| 4-07-4 | SPRING, Release, Upper, w/Std. Trans., PD1, PD3, PD4, PS1 . . . . . | 6-8 | 60 | 60 | 60 | - | 1 | 694 773 |
| | Lower, w/Std. Trans., PD1, PD3, PD4, PS1. . . | 6-8 | 60 | 60 | 60 | - | 1 | 388 302 |
| 4-07-16 | BRACKET, w/Std. Trans., PD1, PD3, PD4, PS1 . | 6-8 | 60 | 60 | 60 | - | 1 | 853 876 |
| 4-07-23 | SPRING, Shoe Guide and Grease Shield, w/Std. Trans., PP2 High Performance, PD2. | 8 | 60 | 60 | - | - | 1 | 1530 775 |
| | w/PowerFlite and Auto. 3 Speed Trans. . . . | 6-8 | 60 | 60 | 60 | 60 | 1 | 1530 775 |


MyMopar.com

| CODE | PART NAME AND DESCRIPTION | NO. OF CYL. | PLYMOUTH | DODGE | DESOTO | CHRYSLER AND IMPERIAL | PER CAR | PART NUMBER |
|---|---|---|---|---|---|---|---|---|
| **4-07-0** | **PARKING BRAKE ADJUSTER - CONT'D** | | | | | | | |
| 4-07-28 | SLEEVE, w/Std. Trans., PP2 High Performance, PD2 | 8 | 60 | 60 | - | - | 1 | 1314 476 |
| | w/PowerFlite and Auto. 3 Speed Trans. | 6-8 | 60 | 60 | 60 | 60 | 1 | 1314 476 |
| **4-23-0** | **PARKING BRAKE CONTROL CABLE** | | | | | | | |
| 4-23-1 | CABLE, w/Std. Trans., PD1, PD3, PD4 | 6-8 | 60 | 60 | - | - | 1 | 1946 418 |
| | PP2 High Performance, PD2 | 8 | 60 | 60 | - | - | 1 | 1946 413 |
| | w/PowerFlite and Auto. 3 Speed Trans., PC1, PC2, PC3 | 6-8 | 60 | 60 | 60 | 60 | 1 | 1946 413 |
| | w/Auto Pilot, PC2, PC3 | 8 | - | - | - | 60 | 1 | 1946 450 |
| | PY1 | 8 | - | - | - | 60 | 1 | 1829 790 |
| 4-23-2 | BRACKET, Clamp, w/Std. Trans., PD1, PD3, PD4 | 6-8 | 60 | 60 | - | - | 1 | 1829 816 |
| 4-23-3 | RETAINER, Cable, at Dash Panel, PC1, PC2, PC3 | 6-8 | 60 | 60 | 60 | 60 | 1 | 1946 468 |
| 4-23-4 | SEAL, Cable, at Dash Panel, PC1, PC2, PC3. | 6-8 | 60 | 60 | 60 | 60 | 1 | 1946 415 |
| 4-23-6 | NUT, Cable Adjusting, PC1, PC2, PC3 | 6-8 | 60 | 60 | 60 | 60 | 1 | 1946 416 |
| 4-23-24 | PIN, Lower Clevis, w/Std. Trans., PD1, PD3, PD4 | 6-8 | 60 | 60 | - | - | 1 | 404 194 |
| 4-23-38 | CLIP, Cable | 6-8 | 60 | 60 | 60 | 60 | 1 | 1263 079 |
| 4-23-46 | GROMMET, on Dash Panel | 6-8 | 60 | 60 | 60 | 60 | 1 | 1370 460 |
| 4-23-50 | BUSHING, w/Std. Trans., PP2 High Performance, PD2 | 8 | 60 | 60 | - | - | 1 | 1943 828 |
| | w/PowerFlite and Auto. 3 Speed Trans., PC1, PC2, PC3 | 6-8 | 60 | 60 | 60 | 60 | 1 | 1943 828 |
| | PY1 | 8 | - | - | - | 60 | 1 | 1406 964 |
| 4-23-51 | WASHER, w/Std. Trans., PP2 High Performance, PD2 | 8 | 60 | 60 | - | - | 1 | 1943 833 |
| | w/PowerFlite and Auto. 3 Speed Trans., PC1, PC2, PC3 | 6-8 | 60 | 60 | 60 | 60 | 1 | 1943 833 |
| | Inner, PY1 | 8 | - | - | - | 60 | 1 | 1406 975 |
| | Outer, PY1 | 8 | - | - | - | 60 | 1 | 1406 976 |
| **4-25-0** | **PARKING BRAKE - FOOT OPERATED** | | | | | | | |
| 4-25-1 | LEVER, PC1, PC2, PC3 | 6-8 | 60 | 60 | 60 | 60 | 1 | 1946 400 |
| | PY1 | 8 | - | - | - | 60 | 1 | 1946 422 |
| 4-25-2 | BRACKET, Parking Brake Mounting, PY1 | 8 | - | - | - | 60 | 1 | 2080 568 |
| 4-25-3 | KNOB, Release, PY1 | 8 | - | - | - | 60 | 1 | 1946 447 |
| | PC1, PC2, PC3 | 6-8 | 60 | 60 | 60 | 60 | 1 | 2200 642 |
| 4-25-4 | SPRING, Release, 9/16" I.D. x 1 11/32" Long, w/o Hooks, PC1, PC2, PC3 | 6-8 | 60 | 60 | 60 | 60 | 1 | *2200 639 |
| | 3/8" I.D. x 1 11/16" Long, w/o Hooks, PC1, PC2, PC3 | 6-8 | 60 | 60 | 60 | 60 | 1 | *2207 988 |
| | 3/8" O.D. x 2 1/2" Long, w/HOOKS, PC1, PC2, PC3 | 6-8 | 60 | 60 | 60 | 60 | 1 | B2208 004 |
| | Release Cam Return, PY1 | 8 | - | - | - | 60 | 1 | 2201 454 |
| 4-25-6 | PAD, Pedal, PC1, PC2, PC3 | 6-8 | 60 | 60 | 60 | 60 | 1 | 1946 401 |
| | PY1 | 8 | - | - | - | 60 | 1 | 1946 434 |
| 4-25-16 | PIN, Parking Brake Release Lever Cam Pivot, PY1 | 8 | - | - | - | 60 | 1 | 1829 822 |
| **4-26-0** | **PARKING BRAKE OPERATING LEVER** | | | | | | | |
| 4-26-1 | LEVER, w/Std. Trans., PD1, PD3, PD4, PS1. | 6-8 | 60 | 60 | 60 | - | 2 | 1737 585 |
| | w/Std. Trans., PP2 High Performance, PD2 | 8 | 60 | 60 | - | - | 1 | 1315 879 |
| | w/PowerFlite and Auto. 3 Speed Trans. | 6-8 | 60 | 60 | 60 | 60 | 1 | 1315 879 |
| 4-26-2 | PIN, Clevis, w/Std. Trans., PD1, PD3, PD4 | 6-8 | 60 | 60 | - | - | 1 | 852 454 |
| 4-26-11 | LINK, w/Std. Trans., PD1, PD3, PD4. | 6-8 | 60 | 60 | - | - | 2 | 697 814 |
| | w/Std. Trans., PP2 High Performance, PD2 | 8 | 60 | 60 | - | - | 1 | 1406 677 |
| | w/PowerFlite and Auto. 3 Speed Trans. | 6-8 | 60 | 60 | 60 | 60 | 1 | 1406 677 |



MyMopar.com

| CODE | PART NAME AND DESCRIPTION | NO. OF CYL. | PLYMOUTH | DODGE | DESOTO | CHRYSLER AND IMPERIAL | PER CAR | PART NUMBER |
|---|---|---|---|---|---|---|---|---|
| **4-26-0** | **PARKING BRAKE OPERATING LEVER - Cont'd** | | | | | | | |
| 4-26-16 | SCREW, w/Std. Trans., PP2 High Performance, PD2 | 8 | 60 | 60 | - | - | 1 | 1317 150 |
| | w/PowerFlite and Auto. 3 Speed Trans. | 6-8 | 60 | 60 | 60 | 60 | 1 | 1317 150 |
| 4-26-19 | PIN, Operating Lever Link, w/Std. Trans., PD1, PD3, PD4 | 6-8 | 60 | 60 | - | - | 1 | 652 970 |
| 4-26-23 | SPACER, w/Std. Trans., PD1, PD3, PD4, PS1. | 6-8 | 60 | 60 | 60 | - | 1 | 1314 013 |
| 4-26-28 | NUT, Operating Lever Screw | 6-8 | 60 | 60 | 60 | 60 | 1 | ⊟2208 008 |
| **4-29-0** | **PARKING BRAKE SUPPORT** | | | | | | | |
| 4-29-1 | SUPPORT, w/Std. Trans., PD1, PD3, PD4, PS1 | 6-8 | 60 | 60 | 60 | - | 1 | *1636 259 |
| | PP2 High Performance, PD2 | 8 | 60 | 60 | - | - | 1 | 1946 445 |
| | w/PowerFlite and Auto. 3 Speed Trans., PC1, PC2, PC3 | 6-8 | 60 | 60 | 60 | 60 | 1 | 1946 445 |
| | PY1 | 8 | - | - | - | 60 | 1 | 1738 221 |
| 4-29-13 | SHIELD, Grease, w/Std. Trans., PP2 High Performance, PD2 | 8 | 60 | 60 | - | - | 1 | 1488 901 |
| | w/PowerFlite and Auto. 3 Speed Trans. | 6-8 | 60 | 60 | 60 | 60 | 1 | 1488 901 |
| 4-29-15 | SLEEVE, Spacer, w/Std. Trans., PP2 High Performance, PD2 | 8 | 60 | 60 | - | - | 1 | 1488 890 |
| | w/PowerFlite and Auto. 3 Speed Trans. | 6-8 | 60 | 60 | 60 | 60 | 1 | 1488 890 |
| 4-29-16 | SPACER, w/Std. Trans., PP2 High Performance, PD2 | 8 | 60 | 60 | - | - | 1 | 1488 889 |
| | w/PowerFlite and Auto. 3 Speed Trans. | 6-8 | 60 | 60 | 60 | 60 | 1 | 1488 889 |

## NOTES



MyMopar.com

| CODE | PART NAME AND DESCRIPTION | NO. OF CYL. | PLYMOUTH | DODGE | DESOTO | CHRYSLER AND IMPERIAL | PER CAR | PART NUMBER |
|---|---|---|---|---|---|---|---|---|

## NOTES



MyMopar.com

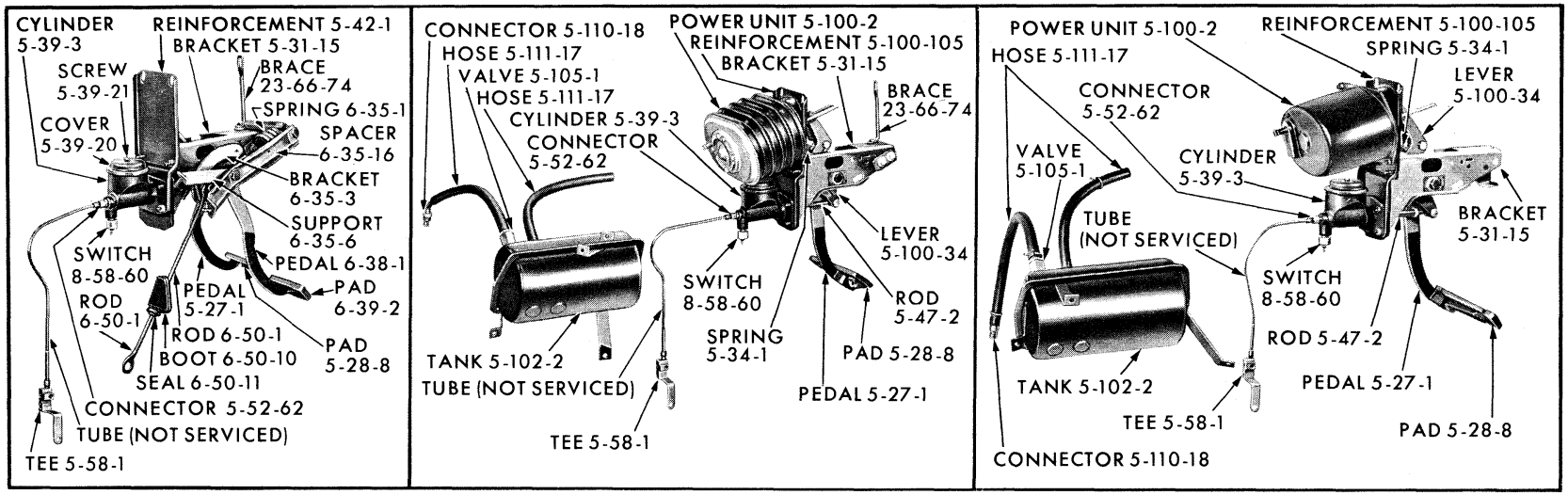


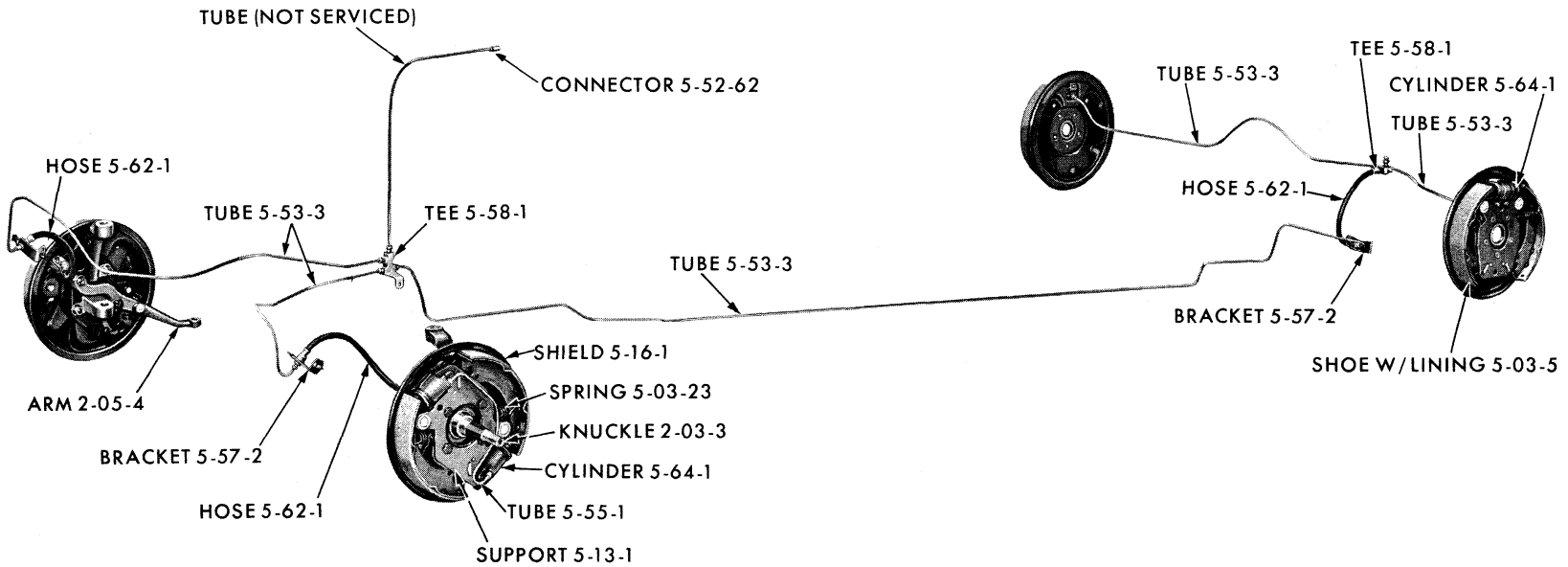


19x8500B



MyMopar.com

Printed in U.S.A. Page 5-1 October 1, 1959.

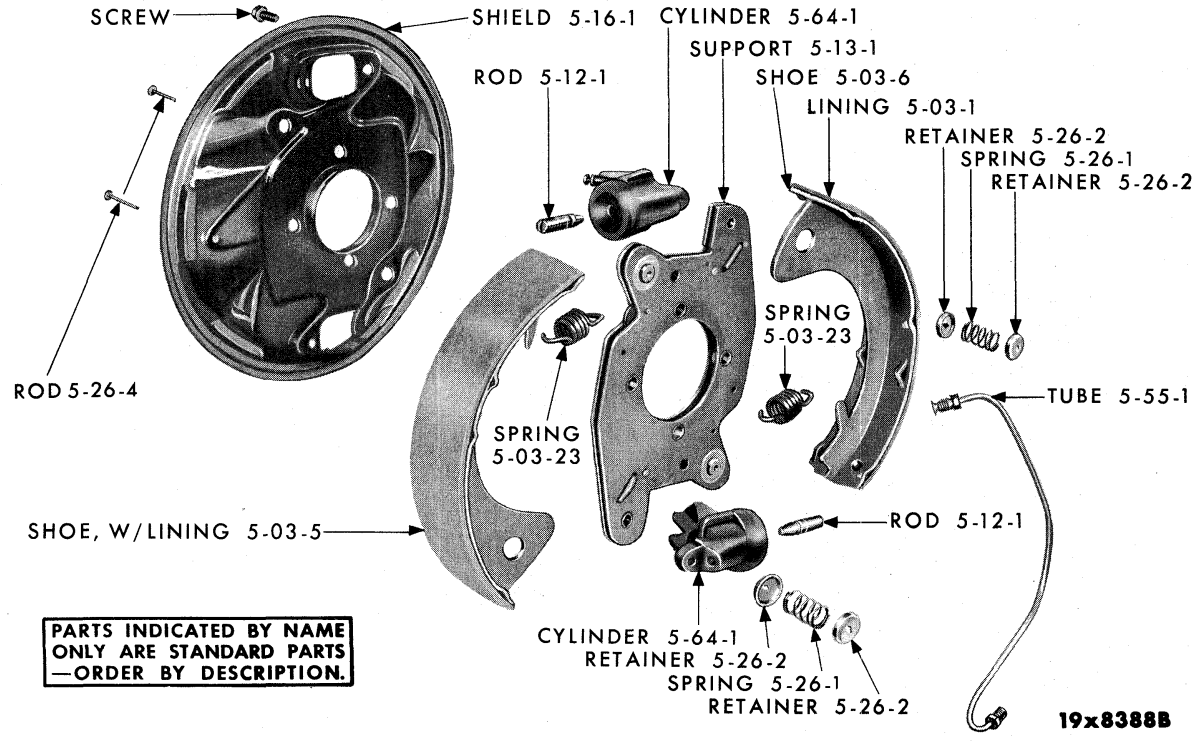


FRONT WHEEL BRAKE

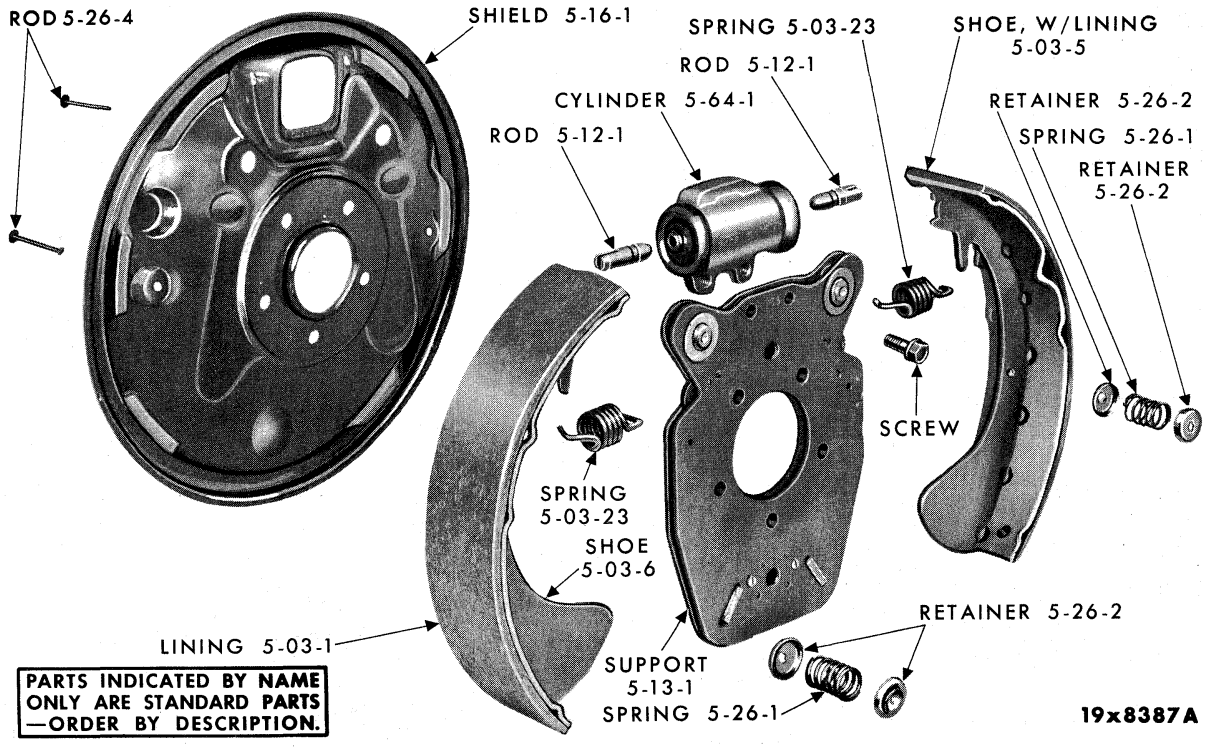


REAR WHEEL BRAKE



MyMopar.com

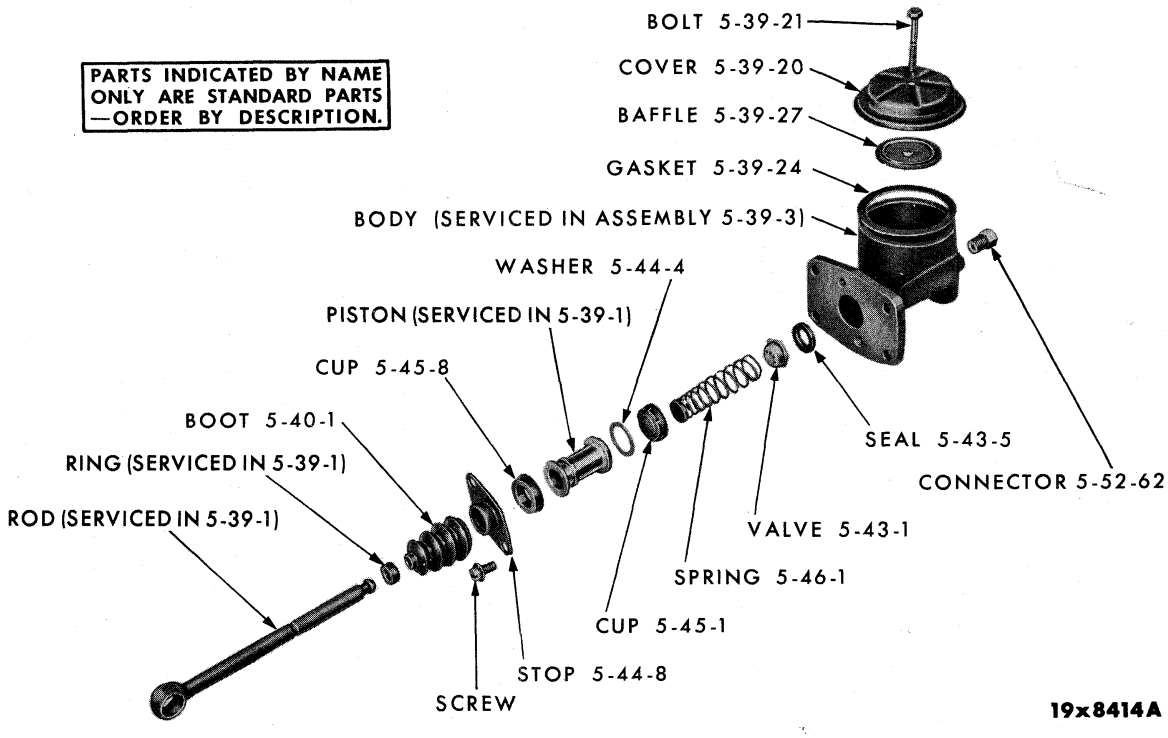


MASTER CYLINDER - USED WITHOUT POWER BRAKE

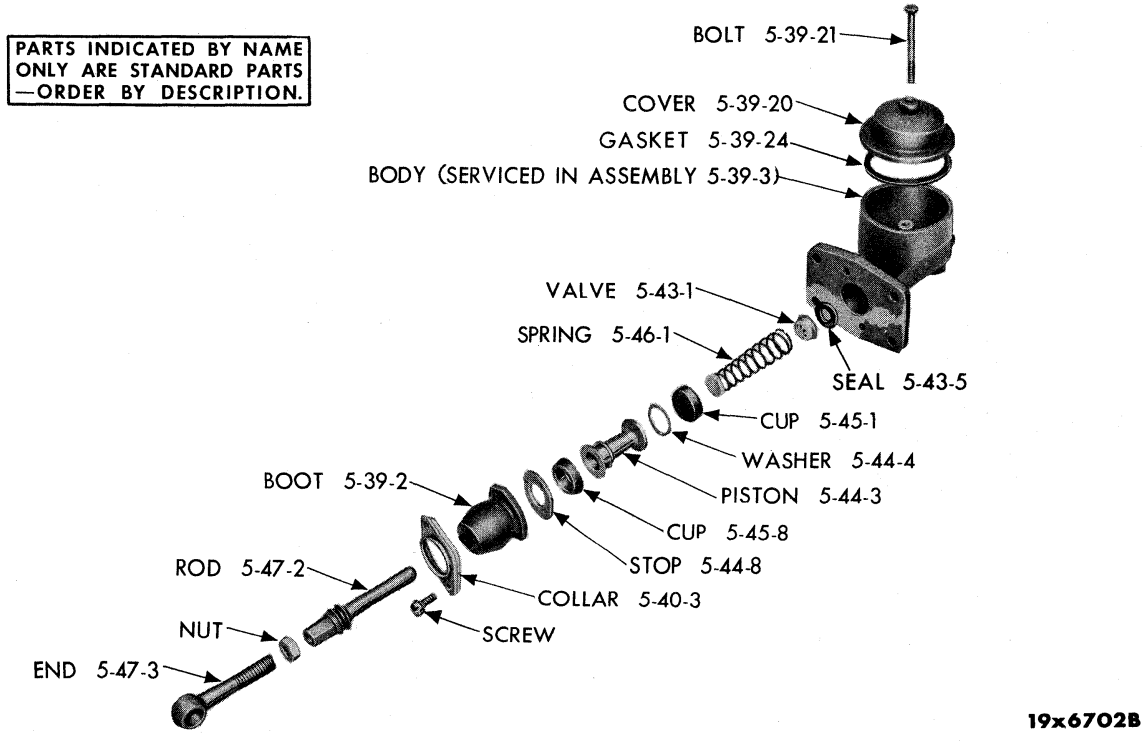


MASTER CYLINDER - USED WITH POWER BRAKE


MyMopar.com

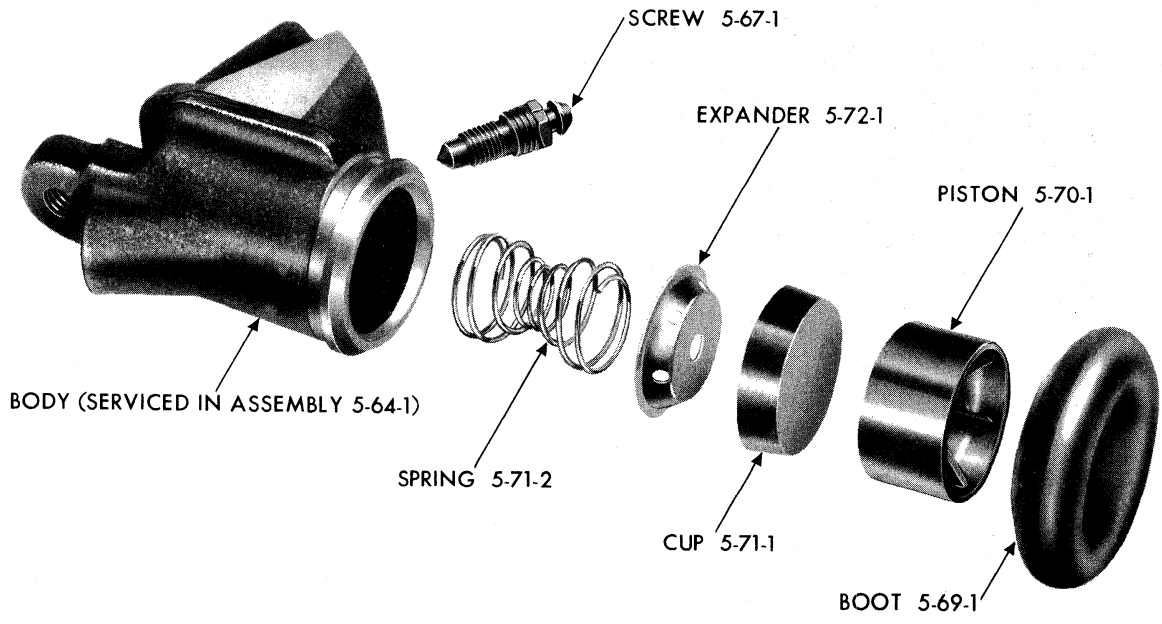


FRONT WHEEL BRAKE CYLINDER

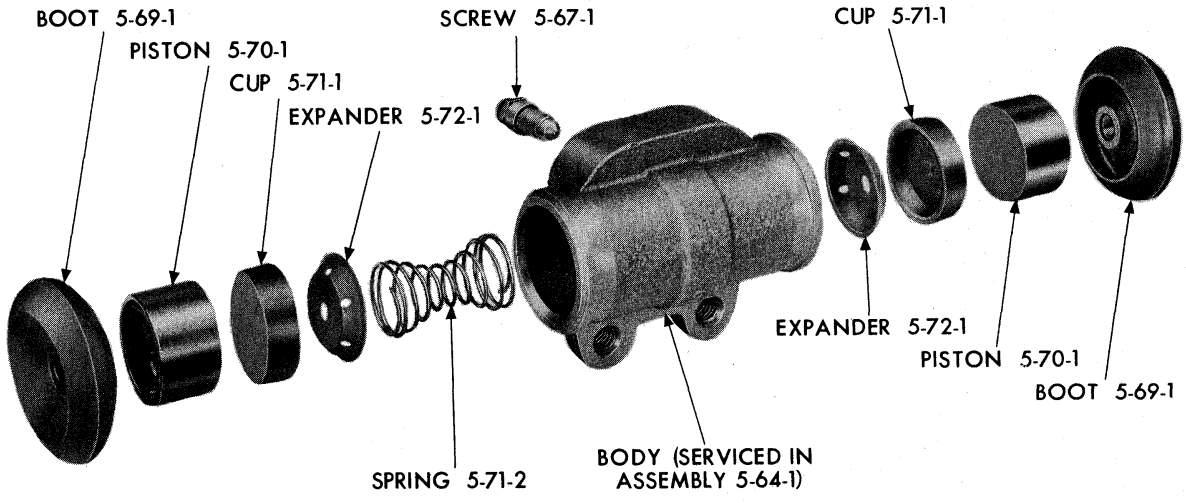


REAR WHEEL BRAKE CYLINDER



MyMopar.com

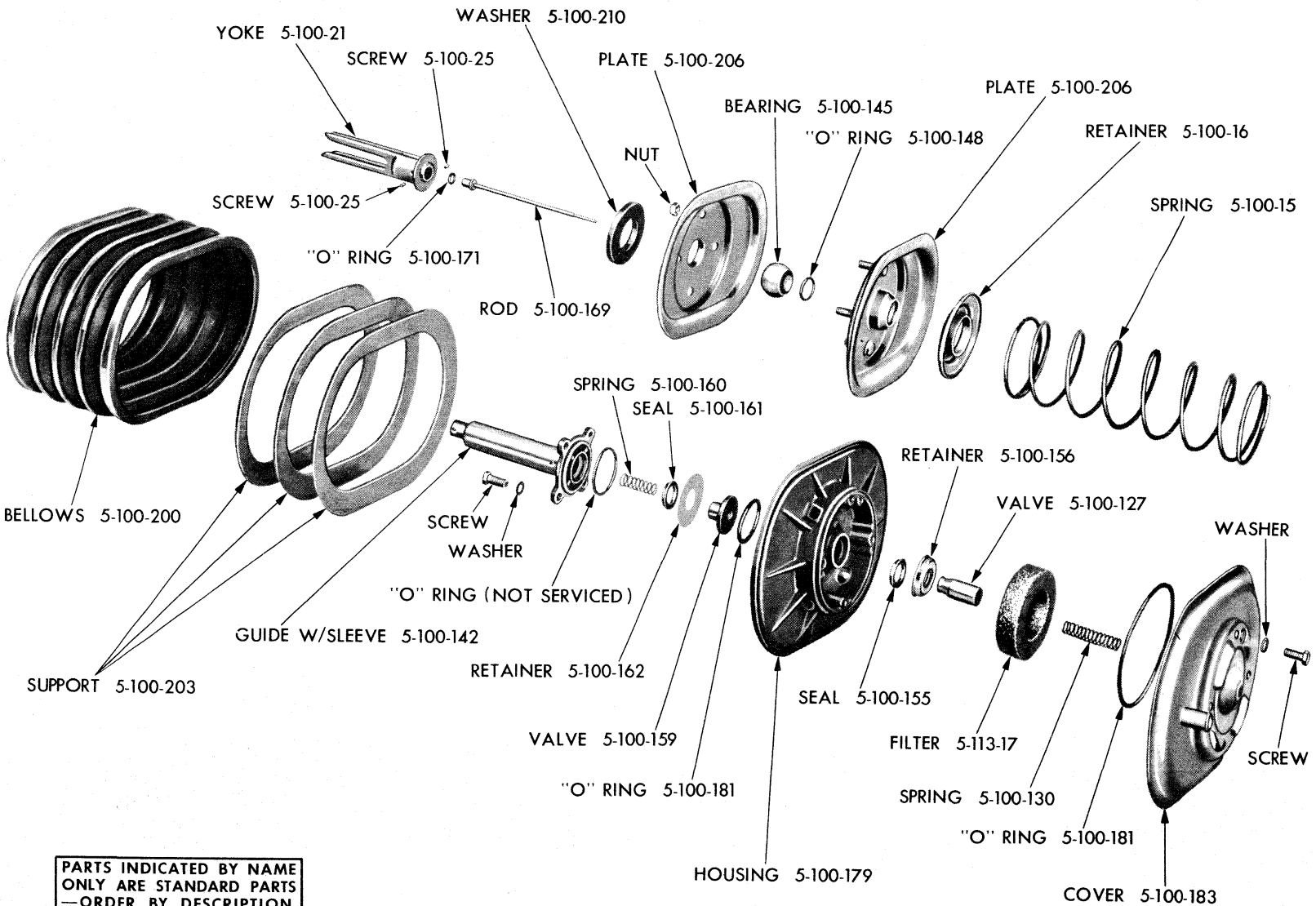


PARTS INDICATED BY NAME ONLY ARE STANDARD PARTS —ORDER BY DESCRIPTION.

POWER BRAKE POWER UNIT - BELLOWS TYPE

MyMopar.com

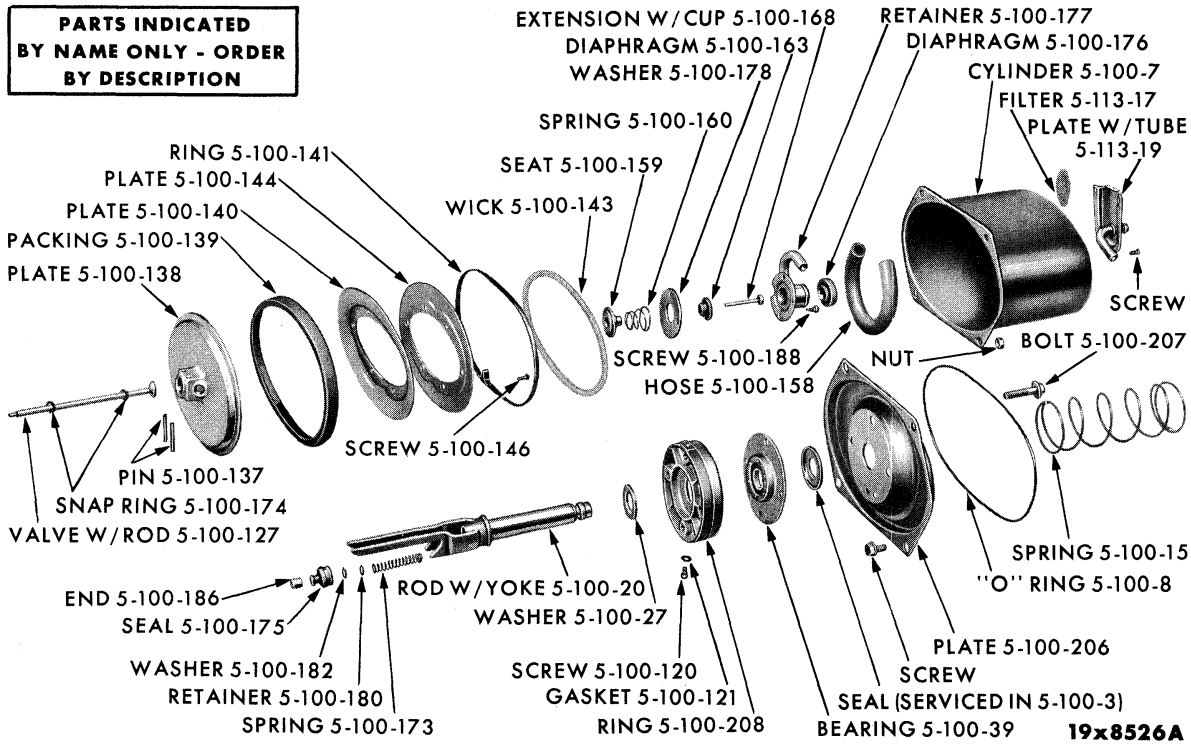


POWER BRAKE POWER UNIT - CYLINDER TYPE

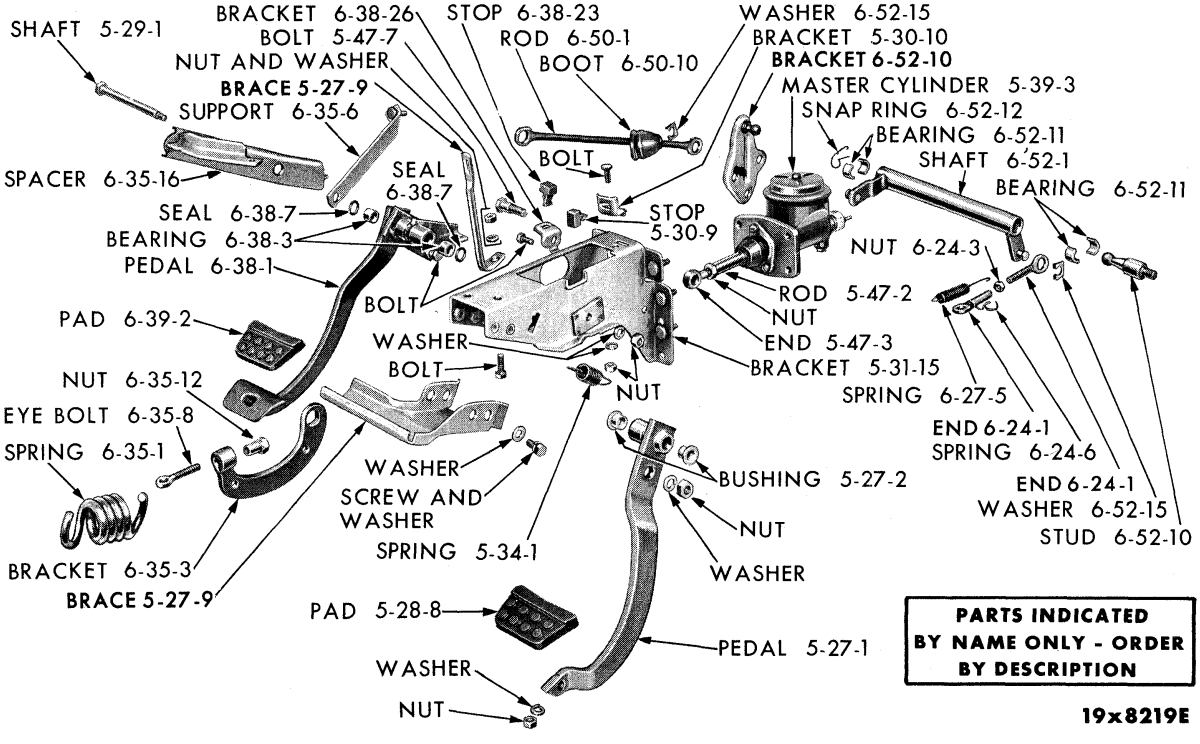


BRAKE AND CLUTCH PEDAL LINKAGE



MyMopar.com

# GROUP 5 - BRAKE-SERVICE

| CODE | PART NAME AND DESCRIPTION | NO. OF CYL. | PLYMOUTH | DODGE | DESOTO | CHRYSLER AND IMPERIAL | PER CAR | PART NUMBER |
|---|---|---|---|---|---|---|---|---|
| **5-01-0** | **BRAKE FLUID** | | | | | | | |
| 5-01-2 | BRAKE FLUID, Hi-Temp., 8 oz. Can | 6-8 | 60 | 60 | 60 | 60 | ★ | 1879 268 |
| | 1 pint Can | 6-8 | 60 | 60 | 60 | 60 | ★ | 1879 269 |
| | 1 Quart Can | 6-8 | 60 | 60 | 60 | 60 | ★ | 1879 270 |
| | 1 gallon Can | 6-8 | 60 | 60 | 60 | 60 | ★ | 1879 271 |
| | 5 gallon Can | 6-8 | 60 | 60 | 60 | 60 | ★ | 1879 272 |
| | 30 gallon Drum | 6-8 | 60 | 60 | 60 | 60 | ★ | 1879 273 |
| **5-03-0** | **WHEEL BRAKE SHOE AND LINING** | | | | | | | |
| 5-03-1 | LINING PACKAGE, 11" x 2" Brakes, PP1, PP2, except Sub., PD3 2 D., Sp. Cl. Cp., 4 D., Sp. 4 D., PD4 2 D., Sp. Cl. Cp., Cv. Cp., 4 D., Sp. 4 D. | 6-8 | 60 | 60 | - | - | 1 | 1879 399 |
| | PP1, PP2, PD3, PD4, Sub. | 6-8 | 60 | 60 | - | - | 1 | 1879 398 |
| | 11 x 2 1/2" Brakes, PD1, PD2, PD3 Taxi, PD4 Taxi, PC1 except Sub. | 6-8 | - | 60 | 60 | 60 | 1 | 1879 401 |
| | 12" x 2 1/2" Brakes, PC1, PC2, PC3 | 6-8 | 60 | 60 | 60 | 60 | 1 | 1879 396 |
| | PC3-300 | 8 | - | - | - | 60 | 1 | 1843 028 |
| | PY1 | 8 | - | - | - | 60 | 1 | 1879 404 |
| 5-03-5 | SHOE, w/LINING, Front Wheel, 11" x 2" Brakes, PP1, PP2, PD3, PD4, except Sub. | 6-8 | 60 | 60 | - | - | 4 | 1943 814 |
| | 11" x 2 1/2" Brakes, PP1, PP2, PD3, PD4, Sub., PD1, PD2, PD3 Taxi, PD4 Taxi, PC1 except Sub. | 6-8 | 60 | 60 | 60 | 60 | 4 | 1943 804 |
| | Rear Wheel, 11" x 2" Brakes, PD3, PD4 | 6-8 | 60 | 60 | - | - | 4 | 1943 814 |
| | 11" x 2 1/2" Brakes, PD1, PD2, PD3 Taxi, PD4 Taxi, PC1 except Sub. | 6-8 | - | 60 | 60 | 60 | 4 | 1943 804 |
| | Front and Rear Wheel, 12" x 2 1/2" Brakes, PC1, PC2, PC3, PC3-300 | 6-8 | 60 | 60 | 60 | 60 | 8 | 2200 122 |
| | Front and Rear Wheel, Front Shoe, PY1 | 8 | - | - | - | 60 | 4 | 1857 063 |
| | Front and Rear Wheel, Rear Shoe, PY1 | 8 | - | - | - | 60 | 4 | 1857 045 |
| 5-03-6 | SHOE, Front Wheel, 11" x 2" Brakes, PP1, PP2, PD3, PD4, except Sub. | 6-8 | 60 | 60 | - | - | 4 | 1943 805 |
| | 11" x 2 1/2" Brakes, PP1, PP2, PD3, PD4, Sub., PD1, PD2, PD3 Taxi, PD4 Taxi, PC1 except Sub. | 6-8 | 60 | 60 | 60 | 60 | 4 | 1943 806 |
| | Rear Wheel, 11" x 2" Brakes, PD3, PD4 | 6-8 | 60 | 60 | - | - | 4 | 1943 805 |
| | 11" x 2 1/2" Brakes, PD1, PD2, PD3 Taxi, PD4 Taxi, PC1 except Sub. | 6-8 | - | 60 | 60 | 60 | 4 | 1943 806 |
| | Front and Rear Wheel, 12" x 2 1/2" Brakes | 6-8 | 60 | 60 | 60 | 60 | 8 | 1943 674 |
| 5-03-9 | PACKAGE, Wheel Brake Dampener | 6-8 | 60 | 60 | 60 | 60 | 1 | ⊟2084 257 |
| 5-03-23 | SPRING, Brake Shoe Return, 11" Brakes, PC1 except Sub. | 6-8 | 60 | 60 | 60 | 60 | 8 | 1944 258 |
| | 12" Brakes | 6-8 | 60 | 60 | 60 | 60 | 8 | 1944 257 |
| **5-12-0** | **WHEEL CYLINDER PISTON PUSH ROD** | | | | | | | |
| 5-12-1 | ROD | 6-8 | 60 | 60 | 60 | 60 | 8 | 1329 890 |
| **5-13-0** | **WHEEL BRAKE SUPPORT** | | | | | | | |
| 5-13-1 | SUPPORT, Front, Right, 11" Brakes, PC1 except Sub. | 6-8 | 60 | 60 | 60 | 60 | 1 | 1943 838 |
| | Front, Left, 11" Brakes, PC1 except Sub. | 6-8 | 60 | 60 | 60 | 60 | 1 | 1943 839 |
| | Rear, 11" Brakes, PC1 except Sub. | 6-8 | 60 | 60 | 60 | 60 | 2 | 1943 813 |

★ Indicates use as required. Numerals in parentheses ( ) refer to notes. Printed in U.S.A.
⊟ Indicates parts not listed in any previous parts book. Prices and specifications subject to change without notice.
* Indicates change or addition.

MyMopar.com



Apr. 20, 1960 Supersedes Oct. 1, 1959.

| CODE | PART NAME AND DESCRIPTION | NO. OF CYL. | PLYMOUTH | DODGE | DESOTO | CHRYSLER AND IMPERIAL | PER CAR | PART NUMBER |
|---|---|---|---|---|---|---|---|---|
| **5-13-0** | **WHEEL BRAKE SUPPORT - Cont'd** | | | | | | | |
| 5-13-1 | SUPPORT - Cont'd | | | | | | | |
| | Front, Right, 12" Brakes, PC1, PC2, PC3 | 6-8 | 60 | 60 | 60 | 60 | 1 | 1943 796 |
| | Front, Left, 12" Brakes, PC1, PC2, PC3 | 6-8 | 60 | 60 | 60 | 60 | 1 | 1943 797 |
| | Front, Right, 12" Brakes, PC3-300, PY1 | 8 | - | - | - | 60 | 1 | 1943 798 |
| | Front, Left, 12" Brakes, PC3-300, PY1 | 8 | - | - | - | 60 | 1 | 1943 799 |
| | Rear, 12" Brakes | 6-8 | 60 | 60 | 60 | 60 | 2 | 1943 832 |
| 5-13-9 | BOLT, Front Support Mounting, 7/16"-20 x 1 3/4" | 6-8 | 60 | 60 | 60 | 60 | 4 | 1615 460 |
| | 7/16"-20 x 2 3/4" | 6-8 | 60 | 60 | 60 | 60 | 2 | 1850 938 |
| | 7/16"-20 x 3 1/8" | 6-8 | 60 | 60 | 60 | 60 | 2 | 1943 691 |
| | Rear Support Mounting, 3/8"-24 x 1 1/4" | 6-8 | 60 | 60 | 60 | 50 | 10 | 1484 652 |
| 5-13-10 | NUT, Front Wheel Mounting | 6-8 | 60 | 60 | 60 | 60 | 4 | * 601 014 |
| | Rear Wheel Mounting | 6-8 | 60 | 60 | 60 | 60 | 10 | * 120 369 |
| **5-16-0** | **WHEEL BRAKE DUST SHIELD** | | | | | | | |
| 5-16-1 | SHIELD, Front, Right, 11" x 2" Brakes, PP1, PP2, PD3, PD4, except Sub. | 6-8 | 60 | 60 | - | - | 1 | 1857 058 |
| | Front, Left, 11" x 2" Brakes, PP1, PP2, PD3, PD4, except Sub. | 6-8 | 60 | 60 | - | - | 1 | 1857 059 |
| | Front, Right, 11" x 2 1/2" Brakes, PP1, PP2, PD3, PD4, Sub., PD1, PD2, PD3 Taxi, PD4 Taxi, PC1 except Sub. | 6-8 | 60 | 60 | 60 | 60 | 1 | 1857 056 |
| | Front, Left, 11" x 2 1/2" Brakes, PP1, PP2, PD3, PD4, Sub., PD1, PD2, PD3 Taxi, PD4 Taxi, PC1 except Sub. | 6-8 | 60 | 60 | 60 | 60 | 1 | 1857 057 |
| | Front, Right, 12" x 2 1/2" Brakes, PC1, PC2, PC3 | 6-8 | 60 | 60 | 60 | 60 | 1 | 1943 666 |
| | PC3-300, PY1 | 8 | - | - | - | 60 | 1 | 1943 686 |
| | Front, Left, 12" x 2 1/2" Brakes, PC1, PC2, PC3 | 6-8 | 60 | 60 | 60 | 60 | 1 | 1943 667 |
| | PC3-300, PY1 | 8 | - | - | - | 60 | 1 | 1943 687 |
| | Rear, 11" x 2" Brakes, PD3, PD4 | 6-8 | 60 | 60 | - | - | 2 | 1857 062 |
| | 11" x 2 1/2" Brakes, PD1, PD2, PD3 Taxi, PD4 Taxi, PC1 except Sub. | 6-8 | - | 60 | 60 | 60 | 2 | 1857 061 |
| | 12" x 2 1/2" Brakes | 6-8 | 60 | 60 | 60 | 60 | 2 | 1857 044 |
| **5-22-0** | **WHEEL BRAKE ADJUSTING CAM DUST SHIELD SEAL** | | | | | | | |
| 5-22-8 | SEAL | 6-8 | 60 | 60 | 60 | 60 | 8 | 1633 111 |
| **5-26-0** | **WHEEL BRAKE SHOE GUIDE** | | | | | | | |
| 5-26-1 | SPRING | 6-8 | 60 | 60 | 60 | 60 | 8 | 600 071 |
| 5-26-2 | RETAINER, Spring, Upper | 6-8 | 60 | 60 | 60 | 60 | 8 | 600 072 |
| | Lower | 6-8 | 60 | 60 | 60 | 60 | 8 | 600 073 |
| **5-27-0** | **WHEEL BRAKE PEDAL** | | | | | | | |
| 5-27-1 | PEDAL, w/o Power Brakes, PC1 | 6-8 | 60 | 60 | 60 | 60 | 1 | 1940 173 |
| | w/Power Brakes, PC1, PC2, PC3 | 6-8 | 60 | 60 | 60 | 60 | 1 | 1940 166 |
| | PY1 | 8 | - | - | - | 60 | 1 | 1738 271 |
| 5-27-2 | BUSHING | 6-8 | 60 | 60 | 60 | 60 | ★ | 1637 779 |
| 5-27-9 | BRACE, Instrument Panel Reinforcement to Pedal Bracket | 6-8 | 60 | - | - | - | 1 | 1901 774 |
| | | 6-8 | - | 60 | 60 | - | 1 | 1901 788 |
| | Windshield Frame to Pedal Bracket, PC1, PC2, PC3 | 6-8 | 60 | 60 | 60 | 60 | 1 | 1901 801 |
| 5-27-10 | PIN, Power Brake Pedal to Arm | 6-8 | 60 | 60 | 60 | 60 | 1 | 1637 773 |
| 5-27-15 | WASHER, Power Brake Pedal Trigger Spring | 6-8 | 60 | 60 | 60 | 60 | 1 | 6000 165 |
| 5-27-22 | ARM, Power Brake Pedal Trigger | 6-8 | 60 | 60 | 60 | 60 | 1 | 1675 214 |
| 5-27-35 | PIVOT, Power Brake Pedal Trigger | 6-8 | 60 | 60 | 60 | 60 | 1 | 1635 344 |



MyMopar.com

| CODE | PART NAME AND DESCRIPTION | NO. OF CYL. | PLYMOUTH | DODGE | DESOTO | CHRYSLER AND IMPERIAL | PER CAR | PART NUMBER |
|---|---|---|---|---|---|---|---|---|
| **5-28-0** | **BRAKE PEDAL PAD** | | | | | | | |
| 5-28-8 | PAD, w/Std. Trans., w/o Power Strg. | 6-8 | 60 | 60 | - | - | 1 | 1940 202 |
| | w/Std. Trans., w/Power Strg. | 6-8 | 60 | 60 | - | - | 1 | 2122 300 |
| | w/PowerFlite and Auto. 3 Speed Trans., PC1, PC2, PC3 | 6-8 | 60 | 60 | 60 | 60 | 1 | 1820 005 |
| | PY1 | 8 | - | - | - | 60 | 1 | 1946 357 |
| **5-29-0** | **BRAKE PEDAL SHAFT** | | | | | | | |
| 5-29-1 | SHAFT, w/Std. Trans. | 6-8 | 60 | 60 | - | - | 1 | 1730 009 |
| | w/PowerFlite and Auto. 3 Speed Trans. | 6-8 | 60 | 60 | 60 | 60 | 1 | 1637 782 |
| **5-31-0** | **BRAKE PEDAL BRACKET** | | | | | | | |
| 5-31-12 | GASKET, Brake Bracket Reinforcement, PY1. | 8 | - | - | - | 60 | 1 | ⊟2200 058 |
| 5-31-15 | BRACKET, w/o Power Brakes, PC1 | 6-8 | 60 | 60 | 60 | 60 | 1 | 1940 162 |
| | w/Power Brakes | 6-8 | 60 | 60 | 60 | 60 | 1 | 1940 161 |
| **5-34-0** | **BRAKE PEDAL RETURN SPRING** | | | | | | | |
| 5-34-1 | SPRING, w/Power Brakes | 6-8 | 60 | 60 | 60 | 60 | 1 | 1730 077 |
| **5-39-0** | **MASTER CYLINDER** | | | | | | | |
| 5-39-1 | REPAIR PACKAGE, w/o Power Brakes, w/o Piston, PC1 | 6-8 | 60 | 60 | 60 | 60 | 1 | 1879 303 |
| | w/o Power Brakes, w/Piston, PC1 | 6-8 | 60 | 60 | 60 | 60 | 1 | 1881 987 |
| | w/Power Brakes, w/Piston | 6-8 | 60 | 60 | 60 | 60 | 1 | 1881 985 |
| 5-39-3 | CYLINDER, w/o Power Brakes, PC1 | 6-8 | 60 | 60 | 60 | 60 | 1 | 1829 400 |
| | w/Power Brakes | 6-8 | 60 | 60 | 60 | 60 | 1 | 1843 413 |
| 5-39-4 | PACKAGE, Master Cylinder Cover | 6-8 | 60 | 60 | 60 | 60 | 1 | 1752 470 |
| 5-39-18 | GASKET | 6-8 | 60 | 60 | 60 | 60 | 1 | 1559 753 |
| 5-39-20 | COVER | 6-8 | 60 | 60 | 60 | 60 | 1 | 1731 225 |
| 5-39-21 | SCREW, Cover | 6-8 | 60 | 60 | 60 | 60 | 1 | 1731 227 |
| 5-39-24 | GASKET, Cover | 6-8 | 60 | 60 | 60 | 60 | 1 | 2122 276 |
| 5-39-27 | BAFFLE, Cover | 6-8 | 60 | 60 | 60 | 60 | 1 | 1731 226 |
| **5-40-0** | **MASTER CYLINDER BOOT** | | | | | | | |
| 5-40-1 | BOOT, w/o Power Brakes | 6-8 | 60 | 60 | 60 | 60 | 1 | 1828 388 |
| | w/Power Brakes | 6-8 | 60 | 60 | 60 | 60 | 1 | 1316 628 |
| 5-40-3 | COLLAR, w/Power Brakes | 6-8 | 60 | 60 | 60 | 60 | 1 | 1316 627 |
| **5-42-0** | **MASTER CYLINDER REINFORCEMENT** | | | | | | | |
| 5-42-1 | REINFORCEMENT, w/o Power Brakes, PC1 | 6-8 | 60 | 60 | 60 | 60 | 1 | 1940 195 |
| **5-43-0** | **MASTER CYLINDER VALVE** | | | | | | | |
| 5-43-1 | VALVE | 6-8 | 60 | 60 | 60 | 60 | 1 | 1318 446 |
| 5-43-5 | SEAL | 6-8 | 60 | 60 | 60 | 60 | 1 | 1617 379 |
| **5-44-0** | **MASTER CYLINDER PISTON** | | | | | | | |
| 5-44-3 | PISTON | 6-8 | 60 | 60 | 60 | 60 | 1 | 1828 659 |
| 5-44-4 | WASHER, Piston Cup | 6-8 | 60 | 60 | 60 | 60 | 1 | 857 443 |
| 5-44-8 | STOP, w/o Power Brakes | 6-8 | 60 | 60 | 60 | 60 | 1 | 1828 389 |

★ Indicates use as required. Numerals in parentheses ( ) refer to notes. Printed in U.S.A.
⊟ Indicates parts not listed in any previous parts book. Prices and specifications subject to change without notice.
* Indicates change or addition.



MyMopar.com

| CODE | PART NAME AND DESCRIPTION | NO. OF CYL. | PLYMOUTH | DODGE | DESOTO | CHRYSLER AND IMPERIAL | PER CAR | PART NUMBER |
|---|---|---|---|---|---|---|---|---|
| **5-45-0** | **MASTER CYLINDER PISTON CUP** | | | | | | | |
| 5-45-8 | CUP, Secondary | 6-8 | 60 | 60 | 60 | 60 | 1 | 958 659 |
| **5-46-0** | **MASTER CYLINDER PISTON RETURN SPRING** | | | | | | | |
| 5-46-1 | SPRING | 6-8 | 60 | 60 | 60 | 60 | 1 | 1738 268 |
| **5-47-0** | **MASTER CYLINDER PISTON PUSH ROD** | | | | | | | |
| 5-47-2 | ROD, w/Power Brakes | 6-8 | 60 | 60 | 60 | 60 | 1 | 1731 202 |
| 5-47-3 | END, w/Power Brakes | 6-8 | 60 | 60 | 60 | 60 | 1 | 1675 218 |
| 5-47-4 | BOLT, End, w/o Power Brakes, PC1 | 6-8 | 60 | 60 | 60 | 60 | 1 | 1616 915 |
| | PIN, w/Power Brakes | 6-8 | 60 | 60 | 60 | 60 | 1 | 1637 784 |
| 5-47-6 | WASHER, Push Rod End Spring, w/Power Brakes | 6-8 | 60 | 60 | 60 | 60 | 1 | 1637 805 |
| 5-47-7 | NUT, End Bolt, w/o Power Brakes, PC1 | 6-8 | 60 | 60 | 60 | 60 | 1 | 2122 266 |
| | RETAINER, End Pin, w/Power Brakes | 6-8 | 60 | 60 | 60 | 60 | 1 | 1671 569 |
| 5-47-10 | RING, w/o Power Brakes, PC1 | 6-8 | 60 | 60 | 60 | 60 | 1 | 1737 167 |
| **5-52-0** | **MASTER CYLINDER BRAKE TUBE** | | | | | | | |
| 5-52-3 | NUT, Master Cylinder to Brake Tube Tee | | | | | | | |
| | Tube, to Tee | 6-8 | 60 | 60 | 60 | 60 | 1 | *1739 226 |
| | To Master Cylinder | 6-8 | 60 | 60 | 60 | 60 | 1 | ⊟1828 461 |
| 5-52-62 | CONNECTOR | 6-8 | 60 | 60 | 60 | 60 | 1 | 1828 396 |
| **5-53-0** | **BRAKE FRAME TUBE** | | | | | | | |
| 5-53-3 | TUBING, 25 Foot Roll, 3/16" O.D. | 6-8 | 60 | 60 | 60 | 60 | ★ | 1843 251 |
| | 1/4" O.D. | 6-8 | 60 | 60 | 60 | 60 | ★ | 1843 252 |
| | 5/16" O.D. | 6-8 | 60 | 60 | 60 | 60 | ★ | 1843 253 |
| | 3/8" O.D. | 6-8 | 60 | 60 | 60 | 60 | ★ | 1843 254 |
| 5-53-4 | COVER, Tube, 25 Foot Roll, for 3/16" O.D. Tube | 6-8 | 60 | 60 | 60 | 60 | ★ | 1843 257 |
| | For 1/4" O.D. Tube | 6-8 | 60 | 60 | 60 | 60 | ★ | 1843 258 |
| | For 5/16" O.D. Tube | 6-8 | 60 | 60 | 60 | 60 | ★ | 1843 259 |
| **5-55-0** | **WHEEL CYLINDER CONNECTING TUBE** | | | | | | | |
| 5-55-1 | TUBE, Right, 11" Brakes, PC1 except Sub. | 6-8 | 60 | 60 | 60 | 60 | 1 | 1633 092 |
| | Left, 11" Brakes, PC1 except Sub. | 6-8 | 60 | 60 | 60 | 60 | 1 | 1633 093 |
| | Right, 12" Brakes | 6-8 | 60 | 60 | 60 | 60 | 1 | 1558 192 |
| | Left, 12" Brakes | 6-8 | 60 | 60 | 60 | 60 | 1 | 1558 191 |
| **5-56-0** | **BRAKE TUBE OR HOSE CLIP** | | | | | | | |
| 5-56-2 | CLIP, Brake Tube | 6-8 | 60 | 60 | 60 | 60 | ★ | 2123 341 |
| | | 6-8 | 60 | 60 | 60 | 60 | ★ | 1119 423 |
| **5-57-0** | **BRAKE TUBE BRACKET** | | | | | | | |
| 5-57-2 | BRACKET, Front, PC1 | 6-8 | 60 | 60 | 60 | 60 | 2 | 1739 248 |
| | PC2, PC3, PY1 | 8 | - | - | - | 60 | 2 | 2123 212 |
| | Rear, PP1, PP2, except Sub. | 6-8 | 60 | - | - | - | 1 | 2123 213 |
| | PP1, PP2, Sub. | 6-8 | 60 | 60 | 60 | 60 | 1 | 2123 214 |


MyMopar.com

| CODE | PART NAME AND DESCRIPTION | NO. OF CYL. | PLYMOUTH | DODGE | DESOTO | CHRYSLER AND IMPERIAL | PER CAR | PART NUMBER |
|---|---|---|---|---|---|---|---|---|
| **5-58-0** | **BRAKE TUBE TEE** | | | | | | | |
| 5-58-1 | TEE, Master Cylinder Tube to Brake Tube, PC1 | 6-8 | 60 | 60 | 60 | 60 | 1 | 2123 217 |
| | PC2, PC3, PY1 | 8 | - | - | - | 60 | 1 | 2123 218 |
| | w/Ram Manifold, PD1, PD2, PD4 | 8 | 60 | 60 | 60 | - | 1 | *2123 204 |
| | Rear Axle Brake Tube, PC1, PC2, PC3 | 6-8 | 60 | 60 | 60 | 60 | 1 | 1940 622 |
| | PY1 | 8 | - | - | - | 60 | 1 | 2070 240 |
| **5-62-0** | **BRAKE FLEXIBLE HOSE** | | | | | | | |
| 5-62-1 | HOSE, Front Wheel, PC1 | 6-8 | 60 | 60 | 60 | 60 | 2 | 1739 249 |
| | PC2, PC3, PY1 | 8 | - | - | - | 60 | 2 | 1554 347 |
| | Rear Wheel, PC1, PC2, PC3 | 6-8 | 60 | 60 | 60 | 60 | 1 | 1739 249 |
| | PY1 | 8 | - | - | - | 60 | 1 | 1739 215 |
| 5-62-7 | GASKET, Front Wheel Flexible Hose | 6-8 | 60 | 60 | 60 | 60 | 2 | 1406 748 |
| 5-62-20 | LOCK, Hose to Bracket | 6-8 | 60 | 60 | 60 | 60 | 3 | 392 911 |
| **5-63-0** | **WHEEL CYLINDER PACKAGE** | | | | | | | |
| 5-63-1 | PACKAGE, Wheel Cylinder Service, Front | 6-8 | 60 | 60 | 60 | 60 | 2 | 2084 254 |
| | Rear | 6-8 | 60 | 60 | 60 | 60 | 2 | 1818 639 |
| 5-63-3 | PACKAGE, Wheel Cylinder Piston, Front | 6-8 | 60 | 60 | 60 | 60 | 2 | 2084 255 |
| | Rear | 6-8 | 60 | 60 | 60 | 60 | 2 | 2084 256 |
| **5-64-0** | **WHEEL BRAKE CYLINDER ASSEMBLY** | | | | | | | |
| 5-64-1 | CYLINDER, Front, Upper, Right | 6-8 | 60 | 60 | 60 | 60 | 1 | 1857 054 |
| | Upper, Left | 6-8 | 60 | 60 | 60 | 60 | 1 | 1857 055 |
| | Lower, Right | 6-8 | 60 | 60 | 60 | 60 | 1 | 1857 052 |
| | Lower, Left | 6-8 | 60 | 60 | 60 | 60 | 1 | 1857 053 |
| | Rear | 6-8 | 60 | 60 | 60 | 60 | 2 | 1857 051 |
| 5-64-2 | BOLT, Wheel Cylinder Mounting | 6-8 | 60 | 60 | 60 | 60 | 8 | 1943 840 |
| **5-67-0** | **WHEEL CYLINDER BLEEDER SCREW** | | | | | | | |
| 5-67-1 | SCREW | 6-8 | 60 | 60 | 60 | 60 | 6 | 1261 834 |
| **5-69-0** | **WHEEL CYLINDER BOOT** | | | | | | | |
| 5-69-1 | BOOT, Front Wheel | 6-8 | 60 | 60 | 60 | 60 | 4 | 1943 690 |
| | Rear Wheel | 6-8 | 60 | 60 | 60 | 60 | 4 | 1136 872 |
| **5-70-0** | **WHEEL CYLINDER PISTON** | | | | | | | |
| 5-70-1 | PISTON | 6-8 | 60 | 60 | 60 | 60 | 8 | 1312 830 |
| **5-71-0** | **WHEEL CYLINDER PISTON CUP** | | | | | | | |
| 5-71-1 | CUP | 6-8 | 60 | 60 | 60 | 60 | 8 | 1674 080 |
| 5-71-2 | SPRING, Wheel Cylinder Piston Return, Front Wheel | 6-8 | 60 | 60 | 60 | 60 | 4 | 1614 894 |
| | Rear Wheel | 6-8 | 60 | 60 | 60 | 60 | 2 | 1633 106 |
| **5-72-0** | **WHEEL CYLINDER PISTON CUP EXPANDER** | | | | | | | |
| 5-72-1 | EXPANDER | 6-8 | 60 | 60 | 60 | 60 | 8 | 1674 081 |



MyMopar.com

## 5-100-0 POWER BRAKE POWER UNIT

| CODE | PART NAME AND DESCRIPTION | NO. OF CYL. | PLYMOUTH | DODGE | DESOTO | CHRYSLER AND IMPERIAL | PER CAR | PART NUMBER |
|---|---|---|---|---|---|---|---|---|
| 5-100-1 | PACKAGE, Repair, for 1675 213 Unit | 6-8 | 60 | 60 | 60 | 60 | 1 | 1675 001 |
| | For 1735 620 and 2123 040 Power Unit | 6-8 | 60 | 60 | 60 | 60 | 1 | *1940 788 |
| | For 2084 809 Field Installed Power Brakes, Major Overhaul | 6-8 | 60 | 60 | 60 | 60 | 1 | 2084 916 |
| | For 2084 809 Field Installed Power Brakes, Minor Overhaul | 6-8 | 60 | 60 | 60 | 60 | 1 | 2084 917 |
| 5-100-2 | POWER UNIT, Bellows Type | 6-8 | 60 | 60 | 60 | 60 | 1 | 1675 213 |
| | Cylinder Type | 6-8 | 60 | 60 | 60 | 60 | 1 | 1735 620 |
| | Cylinder Type, w/Ram Manifold, PD1, PD2, PD4, PC3-300 | 8 | 60 | 60 | 60 | 60 | 1 | 2123 040 |
| 5-100-3 | PACKAGE, Cylinder Seal, for 1735 620 and 2123 040 Power Unit | 6-8 | 60 | 60 | 60 | 60 | 1 | *1940 787 |
| 5-100-34 | LEVER, Brake Pedal | 6-8 | 60 | 60 | 60 | 60 | 1 | 1738 272 |
| 5-100-35 | BUSHING, Lever Pin | 6-8 | 60 | 60 | 60 | 60 | 2 | 1637 793 |
| 5-100-105 | REINFORCEMENT, Bracket, PC1, PC2, PC3 | 6-8 | 60 | 60 | 60 | 60 | 1 | 1940 194 |
| | PY1 | 8 | - | - | - | 60 | 1 | 1675 223 |
| 5-100-110 | CAM, Pedal Adjusting | 6-8 | 60 | 60 | 60 | 60 | 1 | 1737 157 |
| 5-100-111 | COLLAR, Adjusting Cam | 6-8 | 60 | 60 | 60 | 60 | 1 | 1674 302 |
| 5-100-113 | WASHER, Adjusting Cam, Plain | 6-8 | 60 | 60 | 60 | 60 | 1 | 1685 757 |
| | Lock | 6-8 | 60 | 60 | 60 | 60 | 1 | 1737 158 |
| 5-100-152 | PACKAGE, Piston Packing, for 1735 620 and 2123 040 Power Unit | 6-8 | 60 | 60 | 60 | 60 | 1 | *1820 003 |

## COMPONENT PARTS FOR POWER BRAKE POWER UNITS

| PART TYPE CODE | PART NAME | POWER UNIT 1675 213 | POWER UNIT 1735 620 and 2123 040 |
|---|---|---|---|
| 5-100-7 | SHELL | ---- --- | 1739 852 |
| 5-100-8 | SEAL, Shell | ---- --- | 1739 853 |
| 5-100-15 | SPRING, Return | ---- --- | 1739 839 |
| 5-100-20 | ROD, Piston, w/YOKE | ---- --- | 1739 842 |
| 5-100-21 | YOKE | 1820 011 | ---- --- |
| 5-100-25 | SCREW, Set | 1675 003 | ---- --- |
| 5-100-27 | WASHER, Piston Rod Stop Cushion | ---- --- | 1675 099 |
| 5-100-39 | BEARING, Piston Rod | ---- --- | 1940 790 |
| 5-100-120 | SCREW, Inspection Hole | 1673 634 | 132 096 |
| 5-100-121 | GASKET, Inspection Hole Screw | 1674 993 | 1675 137 |
| 5-100-127 | VALVE, Air | 1674 944 | 1739 847 |
| 5-100-130 | SPRING, Air Valve | 1676 486 | ---- --- |
| 5-100-137 | PIN, Piston Plate Spiral | ---- --- | 1675 009 |
| 5-100-138 | PLATE, Piston | ---- --- | 1739 832 |
| 5-100-139 | PACKING, Piston | ---- --- | 1739 834 |
| 5-100-140 | PLATE, Piston Packing | ---- --- | 1739 836 |
| 5-100-141 | RING, Piston Packing | ---- --- | 1739 835 |
| 5-100-142 | GUIDE, w/SLEEVE | 1820 009 | ---- --- |
| 5-100-143 | WICK, Piston Packing | ---- --- | 1675 013 |
| 5-100-144 | PLATE, Packing Wick Retaining | ---- --- | 1739 838 |
| 5-100-145 | BEARING, Guide Sleeve | 1674 970 | ---- --- |
| 5-100-146 | SCREW, Piston Packing Plate | ---- --- | 1675 143 |
| 5-100-148 | SEAL, Bearing to Guide Sleeve | 1674 972 | ---- --- |
| | "O" RING, Bearing to Mounting Plate | 1674 974 | ---- --- |
| 5-100-155 | SEAL, Air Valve | 1674 949 | ---- --- |
| 5-100-156 | RETAINER, Air Valve Seal | 1674 950 | ---- --- |
| 5-100-158 | HOSE, Vacuum | ---- --- | 1675 124 |



MyMopar.com

## 5-100-0 POWER BRAKE POWER UNIT - Cont'd

### COMPONENT PARTS FOR POWER BRAKE POWER UNITS - Cont'd

| PART TYPE CODE | PART NAME | POWER UNIT 1675 213 | POWER UNIT 1735 620 and 2123 040 |
|---|---|---|---|
| 5-100-159 | VALVE, Vacuum | 1674 952 | ---- --- |
| | SEAT, Poppet Valve | ---- --- | 1675 118 |
| 5-100-160 | SPRING, Vacuum Valve | 1674 955 | 1675 122 |
| 5-100-161 | SEAL, Vacuum Valve | 1674 949 | ---- --- |
| 5-100-162 | RETAINER, Vacuum Valve Seal | 1674 954 | ---- --- |
| 5-100-163 | DIAPHRAGM, Poppet Valve Seat | ---- --- | 1675 123 |
| 5-100-168 | EXTENSION, Valve Stem, w/CUP | ---- --- | 1675 109 |
| 5-100-169 | ROD, Valve, w/BUMPER | 1820 012 | ---- --- |
| 5-100-171 | "O" RING, Valve Rod Bumper | 1674 989 | ---- --- |
| 5-100-173 | SPRING, Valve Stem | ---- --- | 1676 487 |
| 5-100-174 | RING, Valve Stem Snap | ---- --- | 1675 104 |
| 5-100-175 | SEAL, Valve Stem | ---- --- | 1675 128 |
| 5-100-176 | DIAPHRAGM, Valve Applying | ---- --- | 1675 112 |
| 5-100-177 | RETAINER, Diaphragm | ---- --- | 1675 113 |
| 5-100-178 | WASHER, Diaphragm Retainer | ---- --- | 1675 117 |
| 5-100-179 | HOUSING, Valve | 1674 942 | ---- --- |
| 5-100-180 | RETAINER, Valve Stem Spring | ---- --- | 1673 620 |
| 5-100-181 | "O" RING, Valve Housing to Guide | 1674 957 | ---- --- |
| | "O" RING, Valve Housing to Cover | 1674 991 | ---- --- |
| 5-100-182 | WASHER, Valve Stem | ---- --- | 1820 025 |
| 5-100-183 | PLATE, Air Cleaner, w/TUBE, for 1735 620 Power Unit | ---- --- | 1820 002 |
| | PLATE, Air Cleaner, w/TUBE, for 2123 040 Power Unit | ---- --- | 2123 517 |
| | COVER, Valve Housing | 1820 013 | ---- --- |
| 5-100-186 | END, Valve Stem | ---- --- | 1739 849 |
| 5-100-188 | SCREW, Diaphragm Retainer | ---- --- | 1675 143 |
| 5-100-200 | BELLOWS, Power Unit | 1820 007 | ---- --- |
| 5-100-201 | SPRING, Bellows Return | 1820 010 | ---- --- |
| 5-100-202 | RETAINER, Bellows Return Spring | 1674 965 | ---- --- |
| 5-100-203 | PLATE, Bellows Spacer | 1820 008 | ---- --- |
| 5-100-206 | PLATE, Mounting, Inner | 1674 966 | ---- --- |
| | Outer | 1674 968 | ---- --- |
| | End | ---- --- | 1739 851 |
| 5-100-207 | BOLT, End Plate | ---- --- | 1675 146 |
| | Mounting Ring | ---- --- | 1735 640 |
| 5-100-208 | RING, Mounting | ---- --- | 1675 132 |
| 5-100-210 | WASHER, Stop and Seal | 1674 975 | ---- --- |

| CODE | PART NAME AND DESCRIPTION | NO. OF CYL. | PLYMOUTH | DODGE | DESOTO | CHRYSLER AND IMPERIAL | PER CAR | PART NUMBER |
|---|---|---|---|---|---|---|---|---|
| **5-102-0 POWER BRAKE VACUUM TANK** | | | | | | | | |
| 5-102-2 | TANK, Vacuum, PC1 | 6-8 | 60 | 60 | 60 | 60 | 1 | 1948 815 |
| | PC2, PC3 | 8 | - | - | - | 60 | 1 | 1948 822 |
| | PY1 | 8 | - | - | - | 60 | 1 | 1948 827 |
| 5-102-11 | NUT, Vacuum Tank Bracket Mounting, PC2, PC3 | 8 | - | - | - | 60 | 2 | 6000 123 |
| | PC1 | 6-8 | 60 | 60 | 60 | 60 | 2 | B2076 232 |
| **5-105-0 POWER BRAKE VACUUM CHECK VALVE** | | | | | | | | |
| 5-105-1 | VALVE, 3 Way, PC1 | 6-8 | 60 | 60 | 60 | 60 | 1 | 1944 089 |

★ Indicates use as required. Numerals in parentheses ( ) refer to notes. Printed in U.S.A.
B Indicates parts not listed in any previous parts book. Prices and specifications subject to change without notice.
* Indicates change or addition.



MyMopar.com

| CODE | PART NAME AND DESCRIPTION | NO. OF CYL. | PLYMOUTH | DODGE | DESOTO | CHRYSLER AND IMPERIAL | PER CAR | PART NUMBER |
|---|---|---|---|---|---|---|---|---|
| **5-110-0** | **POWER BRAKE TUBE CONNECTOR** | | | | | | | |
| 5-110-18 | CONNECTOR, 2 Way | 6-8 | 60 | 60 | 60 | 60 | 1 | ⊟1944 092 |
| | CONNECTOR, 3 Way | 6-8 | 60 | 60 | 60 | 60 | 1 | ⊟1948 838 |
| **5-111-0** | **POWER BRAKE VACUUM HOSE** | | | | | | | |
| 5-111-17 | HOSE (3/4" I.D.-100 foot roll - sold by the inch) | 6-8 | 60 | 60 | 60 | 60 | ★ | 572 507 |
| | (11/32" I.D.-100 foot roll - sold by the inch) | 6-8 | 60 | 60 | 60 | 60 | ★ | 1064 541 |
| | (1/2" I.D.-100 foot roll - sold by the inch) | 6-8 | 60 | 60 | 60 | 60 | ★ | 1671 650 |
| **5-112-0** | **POWER BRAKE HOSE CLAMP** | | | | | | | |
| 5-112-1 | CLAMP, Check Valve Hose | 6-8 | 60 | 60 | 60 | 60 | 4 | 272 848 |
| | Intake Manifold Hose | 6-8 | 60 | 60 | 60 | 60 | 2 | 448 797 |
| **5-113-0** | **POWER BRAKE AIR CLEANER** | | | | | | | |
| 5-113-17 | FILTER, for 1675 213 Power Unit | 6-8 | 60 | 60 | 60 | 60 | 1 | 1674 963 |
| | For 1735 620 and 2123 040 Power Unit | 6-8 | 60 | 60 | 60 | 60 | 1 | 1675 142 |

## NOTES

★ Indicates use as required. Numerals in parentheses ( ) refer to notes. Printed in U.S.A.
⊟ Indicates parts not listed in any previous parts book. Prices and specifications subject to change without notice.



MyMopar.com

# GROUP 6 - CLUTCH

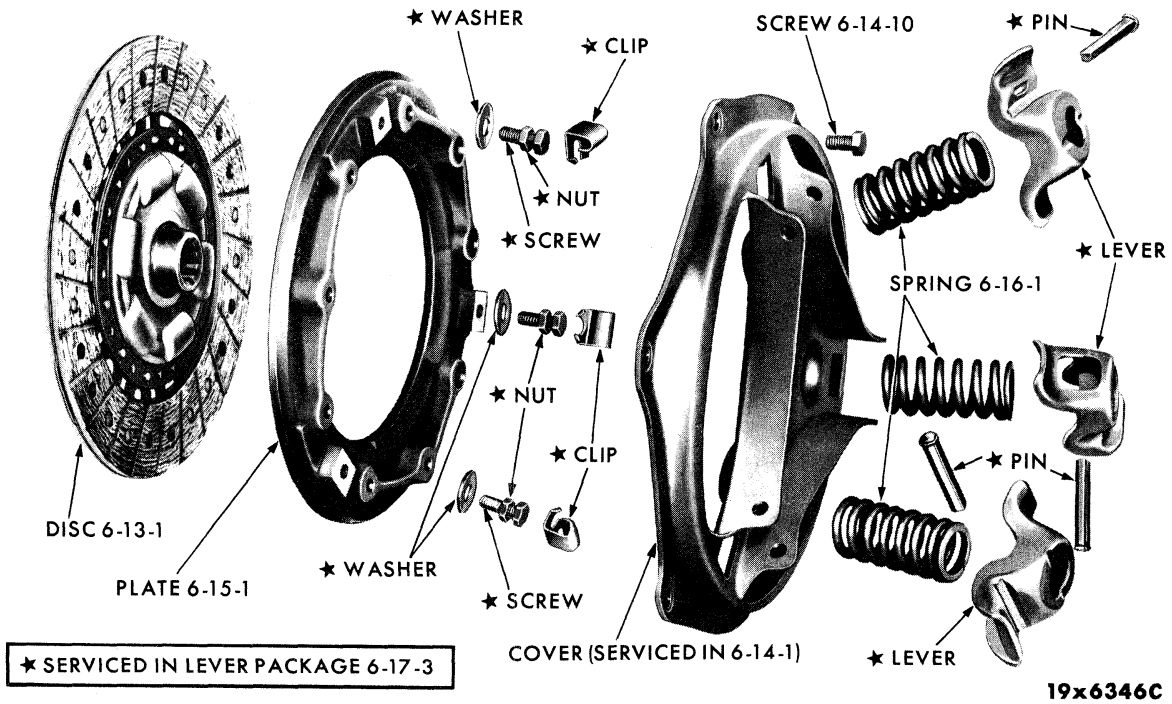


CLUTCH - TYPE 1

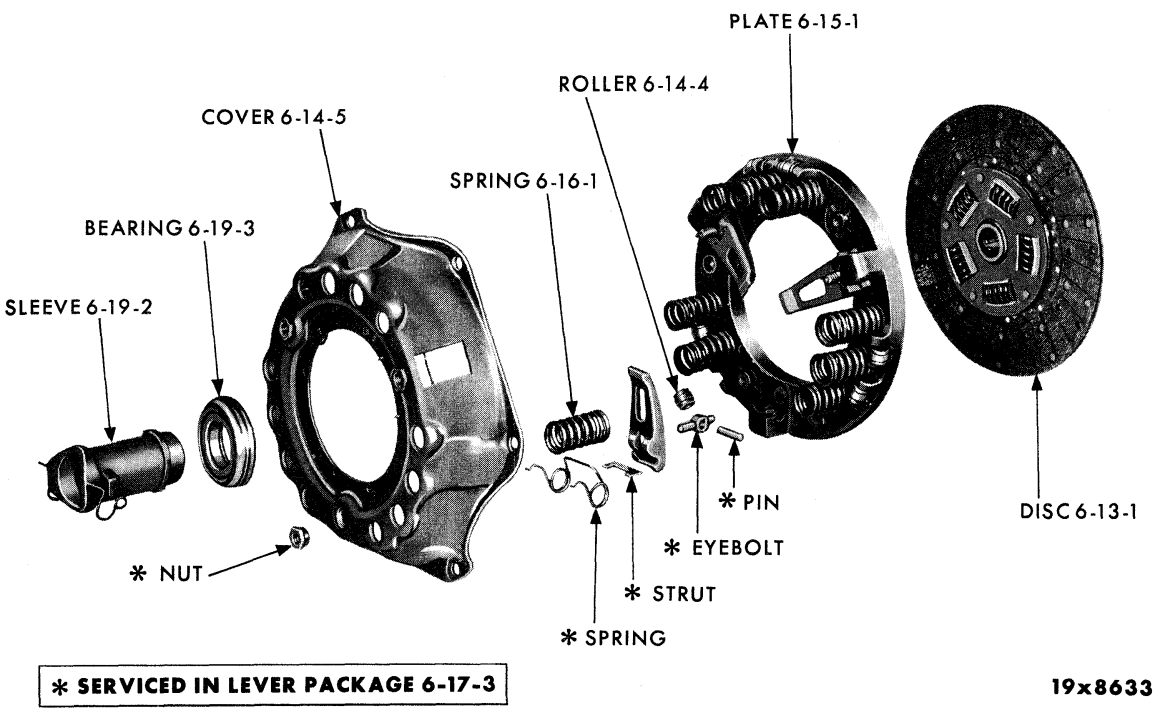


CLUTCH - TYPE 2



MyMopar.com

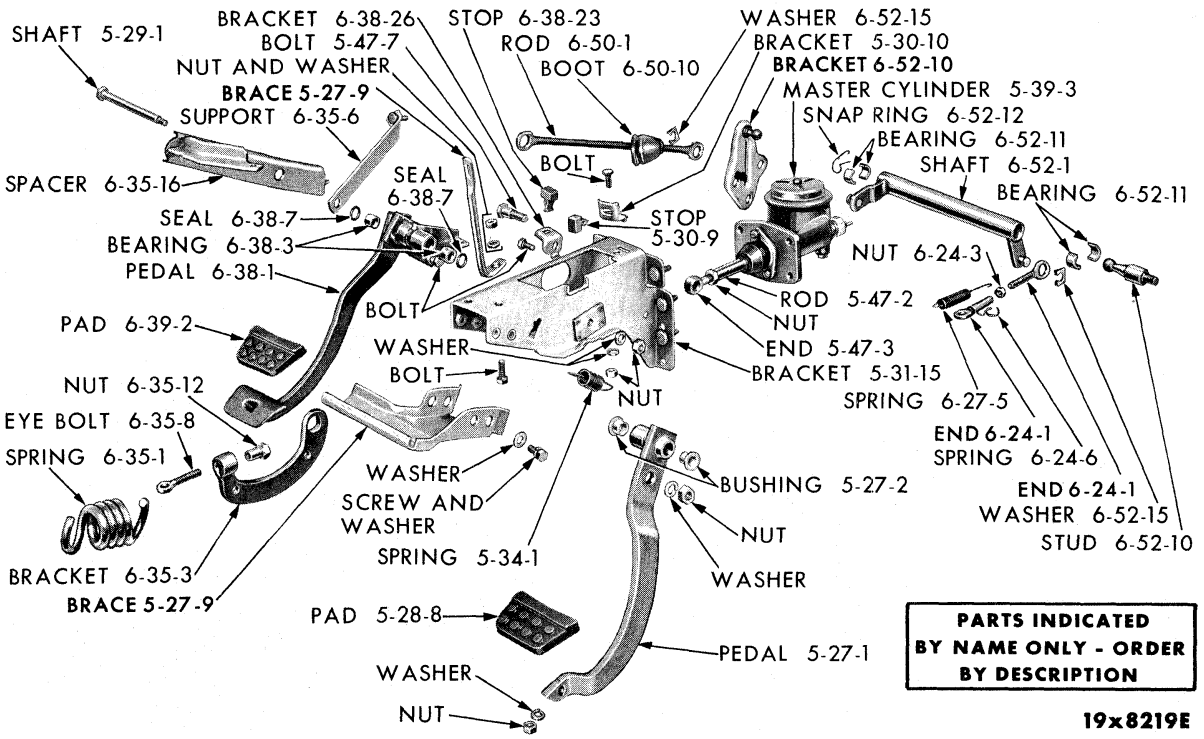


CLUTCH AND BRAKE PEDAL LINKAGE

## NOTES



MyMopar.com

# GROUP 6 - CLUTCH

Type 1. Used with clutch having 3 pressure plate springs.
Type 2. Used with clutch having 6 pressure plate springs.
Type 3 Used with clutch having 9 pressure plate springs.

| CODE | PART NAME AND DESCRIPTION | NO. OF CYL. | PLYMOUTH | DODGE | DESOTO | CHRYSLER AND IMPERIAL | PER CAR | PART NUMBER |
|---|---|---|---|---|---|---|---|---|
| **6-01-0** | **CLUTCH** | | | | | | | |
| 6-01-3 | PACKAGE, Clutch | 6 | 60 | 60 | - | - | 1 | 2196 061 |
| **6-09-0** | **CLUTCH HOUSING** | | | | | | | |
| 6-09-1 | HOUSING, w/9 1/4" and 10" Clutch | 6 | 60 | 60 | - | - | 1 | *2121 880 |
| | PD4, w/10" and 10 1/2" Clutch UP TO Eng. No. 261116 | 8 | 60 | 60 | - | - | 1 | *1851 379 |
| | PD4, w/10" and 10 1/2" Clutch AFTER Eng. No. 261116 | 8 | 60 | - | - | - | 1 | ⊟2128 348 |
| | PP2 High Performance, PD1 | 8 | 60 | 60 | - | - | 1 | *1855 737 |
| | PP2, PD1, PD2, PD4, w/11" Clutch | 8 | 60 | 60 | - | - | 1 | 2121 793 |
| 6-09-6 | SCREW, Clutch Housing | 6 | 60 | 60 | - | - | 5 | *1947 953 |
| 6-09-11 | STRUT, to Cylinder Block | 6 | 60 | 60 | - | - | 1 | ⊟2129 887 |
| **6-10-0** | **CLUTCH HOUSING PAN** | | | | | | | |
| 6-10-2 | PAN, w/9 1/4" and 10" Clutch | 6 | 60 | 60 | - | - | 1 | ⊟2129 885 |
| | PP2, PD4, w/10" and 10 1/2" Clutch UP TO Eng. No. 261116 | 8 | 60 | 60 | - | - | 1 | *1638 998 |
| | PP2, PD4, w/10" and 10 1/2" Clutch AFTER Eng. No. 261116 | 8 | 60 | 60 | - | - | 1 | ⊟2129 669 |
| | PP2 High Performance, PD1 | 8 | 60 | 60 | - | - | 1 | 1739 616 |
| | PP2, PD1, PD2, PD4, w/11" Clutch | 8 | 60 | 60 | - | - | 1 | 2121 794 |
| 6-10-10 | SEAL, Dust | 6 | 60 | 60 | - | - | 1 | 2128 421 |
| **6-13-0** | **CLUTCH DISC** | | | | | | | |
| 6-13-1 | DISC, 9 1/4" Clutch, w/Light Blue Springs | 6 | 60 | 60 | - | - | 1 | 2200 061 |
| | 10" Clutch, w/Light Blue Springs | 6 | 60 | 60 | - | - | 1 | 2200 060 |
| | 10" Clutch, Taxi | 6 | 60 | 60 | - | - | 1 | ⊟2201 216 |
| | 10 1/2" Clutch, PD1 | 8 | 60 | 60 | - | - | 1 | *2123 044 |
| | 10 1/2" Clutch, PP2, PD4, UP TO Eng. No. 260283 | 8 | 60 | 60 | - | - | 1 | *2123 044 |
| | 10 1/2" Clutch, PD2, PD4, AFTER Eng. No. 260283 | 8 | 60 | 60 | - | - | 1 | *2200 064 |
| | 10" Clutch, PP2, PD4, UP TO Eng. No. 261116, PD2 All | 8 | 60 | 60 | - | - | 1 | *2123 045 |
| | 10" Clutch, PP2, PD4 AFTER Eng. No. 261116 | 8 | 60 | 60 | - | - | 1 | *2200 051 |
| | 11" Clutch, 10 Spline | 8 | 60 | 60 | - | - | 1 | *2200 022 |
| 6-13-4 | FACING, 9 1/4" Clutch, Type 1 | 6 | 60 | 60 | - | - | 2 | 1820 454 |
| | 9 1/4" Clutch, Type 2 | 6 | 60 | 60 | - | - | 2 | 859 882 |
| | 10" Clutch, Type 3 | 6 | 60 | 60 | - | - | 2 | * 684 364 |
| | 10" Clutch, PD4 | 8 | 60 | 60 | - | - | 2 | 1554 593 |
| | 10" Clutch, Front, Taxi | 6 | 60 | 60 | - | - | 1 | ⊟2201 218 |
| | 10" Clutch, Rear, Taxi | 6 | 60 | 60 | - | - | 1 | ⊟2201 217 |
| | 10 1/2" Clutch, PD1, PD4 | 6-8 | 60 | 60 | - | - | 2 | 1739 092 |
| | 11" Clutch, PD1, PD2 | 8 | 60 | 60 | - | - | 2 | 1311 949 |
| 6-13-8 | RIVET, Type 1 | 6 | 60 | 60 | - | - | 24 | 1313 312 |
| | Type 2 | 6-8 | 60 | 60 | - | - | ★ | 660 146 |
| **6-14-0** | **CLUTCH COVER AND PRESSURE PLATE** | | | | | | | |
| 6-14-1 | COVER, w/PLATE, 9 1/4" and 10" Clutch | 6 | 60 | 60 | - | - | 1 | ⊟2201 223 |
| | 10" Clutch, PD4 | 8 | 60 | 60 | - | - | 1 | 2122 254 |
| | 10 1/2" Clutch, PD1, PD4 | 8 | 60 | 60 | - | - | 1 | 2122 255 |
| | 11" Clutch, PD1, PD2, PD4, PC1 | 8 | 60 | 60 | - | 60 | 1 | *2200 023 |
| 6-14-4 | ROLLER, Centrifugal | 8 | 60 | 60 | - | - | 6 | 2122 262 |
| 6-14-10 | SCREW, to Flywheel, 9 1/4" Clutch | 6 | 60 | 60 | - | - | 6 | 307 555 |
| | 10", 10 1/2", 11" Clutch | 6 | 60 | 60 | - | - | 6 | 2200 050 |
| | 10", 10 1/2" and 11" Clutch | 6-8 | 60 | 60 | - | - | 6 | 314 926 |

★ Indicates use as required. Numerals in parentheses ( ) refer to notes. Printed in U.S.A.
⊟ Indicates parts not listed in any previous parts book. Prices and specifications subject to change without notice.
* Indicates change or addition.


MyMopar.com

| CODE | PART NAME AND DESCRIPTION | NO. OF CYL. | PLYMOUTH | DODGE | DESOTO | CHRYSLER AND IMPERIAL | PER CAR | PART NUMBER |
|---|---|---|---|---|---|---|---|---|
| **6-15-0** | **CLUTCH PRESSURE PLATE** | | | | | | | |
| 6-15-1 | PLATE, 9 1/4" Clutch, Type 2 | 6 | 60 | 60 | - | - | 1 | 855 519 |
| **6-16-0** | **CLUTCH PRESSURE SPRING** | | | | | | | |
| 6-16-1 | SPRING, 9 1/4" Clutch, Orange | 6 | 60 | 60 | - | - | ★ | * 864 397 |
| | 9 1/4" Clutch, Type 2, White | 6 | 60 | 60 | - | - | 6 | 1406 504 |
| | 10" Clutch | 6-8 | 60 | 60 | - | - | 9 | *1067 037 |
| | 10 1/2" Clutch, PD1, PD4, Red | 8 | 60 | 60 | - | - | 9 | 1067 037 |
| | 11" Clutch, PD1, White | 8 | - | 60 | - | - | 6 | 1406 504 |
| | 11" Clutch, PD1, Tan | 8 | - | 60 | - | - | ★ | 864 397 |
| **6-17-0** | **CLUTCH RELEASE LEVER** | | | | | | | |
| 6-17-3 | PACKAGE, Lever, 9 1/4" Clutch, Type 2 | 6 | 60 | 60 | - | - | 3 | 1879 652 |
| | 9 1/4" Clutch, Type 1 | 6 | 60 | 60 | - | - | 3 | 1879 655 |
| | 10", 10 1/2" and 11" Clutch | 6-8 | 60 | 60 | - | - | 3 | 2084 250 |
| **6-19-0** | **CLUTCH RELEASE BEARING** | | | | | | | |
| 6-19-2 | BEARING, w/SLEEVE | 6 | 60 | 60 | - | - | 1 | 2200 027 |
| | UP TO 261116 | 8 | 60 | 60 | - | - | 1 | *1634 511 |
| | PP2, PD4, w/A903 Trans. AFTER 261116 | 8 | 60 | 60 | - | - | 1 | *2200 301 |
| 6-19-3 | BEARING | 6-8 | 60 | 60 | - | - | 1 | 658 998 |
| **6-20-0** | **CLUTCH RELEASE BEARING PULL-BACK SPRING** | | | | | | | |
| 6-20-14 | SPRING | 6 | 60 | 60 | - | - | 2 | 2073 687 |
| | | 8 | 60 | 60 | - | - | 2 | 671 915 |
| **6-22-0** | **CLUTCH RELEASE FORK** | | | | | | | |
| 6-22-1 | FORK, w/SPRING | 6 | 60 | 60 | - | - | 1 | 2072 902 |
| | | 8 | 60 | 60 | - | - | 1 | 1618 848 |
| 6-22-4 | SEAL | 6-8 | 60 | 60 | - | - | 1 | 2075 009 |
| | PIVOT | 8 | 60 | 60 | - | - | 1 | * 633 238 |
| 6-22-15 | PIVOT | 6 | 60 | 60 | - | - | 1 | 2072 900 |
| 6-22-17 | PIN | 6-8 | 60 | 60 | - | - | 1 | 1324 090 |
| 6-22-19 | SPRING | 6 | 60 | 60 | - | - | 1 | 2072 901 |
| | | 8 | 60 | 60 | - | - | 1 | 863 905 |
| **6-24-0** | **CLUTCH RELEASE FORK ROD** | | | | | | | |
| 6-24-1 | END, Front | 6 | 60 | 60 | - | - | 1 | 2200 029 |
| | | 8 | 60 | 60 | - | - | 1 | 1675 245 |
| | Front, PP2 High Performance | 8 | 60 | 60 | - | - | 1 | 1820 448 |
| | Rear | 6 | 60 | 60 | - | - | 1 | 2200 028 |
| | | 8 | 60 | 60 | - | - | 1 | 1675 246 |
| 6-24-3 | NUT, Adjusting | 6-8 | 60 | 60 | - | - | 1 | 1407 347 |
| 6-24-6 | SPRING, Rear | 6-8 | 60 | 60 | - | - | 1 | 1634 508 |
| **6-27-0** | **CLUTCH RELEASE FORK PULL-BACK SPRING** | | | | | | | |
| 6-27-5 | SPRING | 6 | 60 | 60 | - | - | 1 | 2200 302 |
| | | 8 | 60 | 60 | - | - | 1 | 1820 211 |



MyMopar.com

| CODE | PART NAME AND DESCRIPTION | NO. OF CYL. | PLYMOUTH | DODGE | DESOTO | CHRYSLER AND IMPERIAL | PER CAR | PART NUMBER |
|---|---|---|---|---|---|---|---|---|
| **6-35-0** | **CLUTCH RELEASE OVERCENTER SPRING** | | | | | | | |
| 6-35-1 | SPRING | 6-8 | 60 | 60 | - | 60 | 1 | 1820 217 |
| 6-35-3 | BRACKET, PC1 | 6-8 | 60 | 60 | - | - | 1 | 1730 015 |
| 6-35-6 | SUPPORT | 6-8 | 60 | 60 | - | - | 1 | 1946 353 |
| 6-35-8 | EYE | 6-8 | 60 | 60 | - | - | 1 | 1610 954 |
| 6-35-12 | NUT | 6-8 | 60 | 60 | - | - | 1 | 1730 014 |
| 6-35-13 | REINFORCEMENT | 6-8 | 60 | 60 | - | - | 1 | 1731 214 |
| 6-35-16 | SPACER | 6-8 | 60 | 60 | - | - | 1 | 2123 036 |
| 6-35-17 | WASHER | 6-8 | 60 | 60 | - | - | 1 | 669 896 |
| 6-35-18 | BUMPER, Spring Adjuster | 6-8 | 60 | 60 | - | - | 1 | 6010 155 |
| 6-35-19 | ADJUSTER | 6-8 | 60 | 60 | - | - | 1 | 1946 360 |
| **6-38-0** | **CLUTCH PEDAL** | | | | | | | |
| 6-38-1 | PEDAL, 9 1/4" Clutch | 6 | 60 | 60 | - | - | 1 | 2200 334 |
| | Except 9 1/4" Clutch | 6-8 | 60 | 60 | - | - | 1 | 2200 335 |
| 6-38-3 | BUSHING, 9 1/4" Clutch | 6 | 60 | 60 | - | - | 2 | 1637 779 |
| | Bearing, 10" and 11" Clutch | 6-8 | 60 | 60 | - | - | 2 | 1946 377 |
| 6-38-7 | SEAL | 6-8 | 60 | 60 | - | - | 2 | 1730 019 |
| 6-38-23 | STOP, Pedal | 6-8 | 60 | 60 | - | - | 1 | 1940 147 |
| 6-38-26 | BRACKET, Stop | 6-8 | 60 | 60 | - | - | 1 | 1730 007 |
| **6-39-0** | **CLUTCH PEDAL PAD** | | | | | | | |
| 6-39-2 | PAD | 6-8 | 60 | 60 | - | - | 1 | 2201 195 |
| **6-50-0** | **CLUTCH PEDAL ROD** | | | | | | | |
| 6-50-1 | ROD | 6-8 | 60 | 60 | - | - | 1 | 1940 175 |
| 6-50-6 | WASHER, Spring | 6-8 | 60 | 60 | - | - | 2 | 1614 579 |
| 6-50-10 | BOOT, Rod | 6-8 | 60 | 60 | - | - | 1 | 1731 232 |
| 6-50-11 | SEAL, Boot | 6-8 | 60 | 60 | - | - | 1 | 1731 234 |
| 6-50-12 | REINFORCEMENT, Boot | 6-8 | 60 | 60 | - | - | 1 | 1731 233 |
| **6-52-0** | **CLUTCH TORQUE SHAFT** | | | | | | | |
| 6-52-1 | SHAFT, 9 1/4" Clutch | 6 | 60 | 60 | - | - | 1 | 1946 393 |
| | Except 9 1/4" Clutch | 6-8 | 60 | 60 | - | - | 1 | 1940 182 |
| | PP2 High Performance | 8 | 60 | 60 | - | - | 1 | 1940 184 |
| 6-52-10 | STUD, Engine, PD4, 3" lgh. | 6-8 | 60 | 60 | - | - | 1 | 1829 377 |
| | Engine, 2" lgh. | 8 | 60 | 60 | - | - | 1 | 1829 383 |
| | BRACKET, w/STUD | 6-8 | 60 | 60 | - | - | 1 | 1675 242 |
| 6-52-11 | BEARING, Pivot | 6-8 | 60 | 60 | - | - | 4 | 635 884 |
| 6-52-12 | SNAP RING | 6-8 | 60 | 60 | - | - | 1 | 1140 557 |
| 6-52-15 | WASHER, Pin | 6-8 | 60 | 60 | - | - | 2 | 1614 579 |

## NOTES

★ Indicates use as required. Numerals in parentheses ( ) refer to notes. Printed in U.S.A.
⊟ Indicates parts not listed in any previous parts book. Prices and specifications subject to change without notice.
* Indicates change or addition.



Dec. 9, 1960 Supersedes April 20, 1960.

MyMopar.com

| CODE | PART NAME AND DESCRIPTION | NO. OF CYL. | PLYMOUTH | DODGE | DESOTO | CHRYSLER AND IMPERIAL | PER CAR | PART NUMBER |
|---|---|---|---|---|---|---|---|---|

## NOTES


MyMopar.com

# GROUP 7 - COOLING

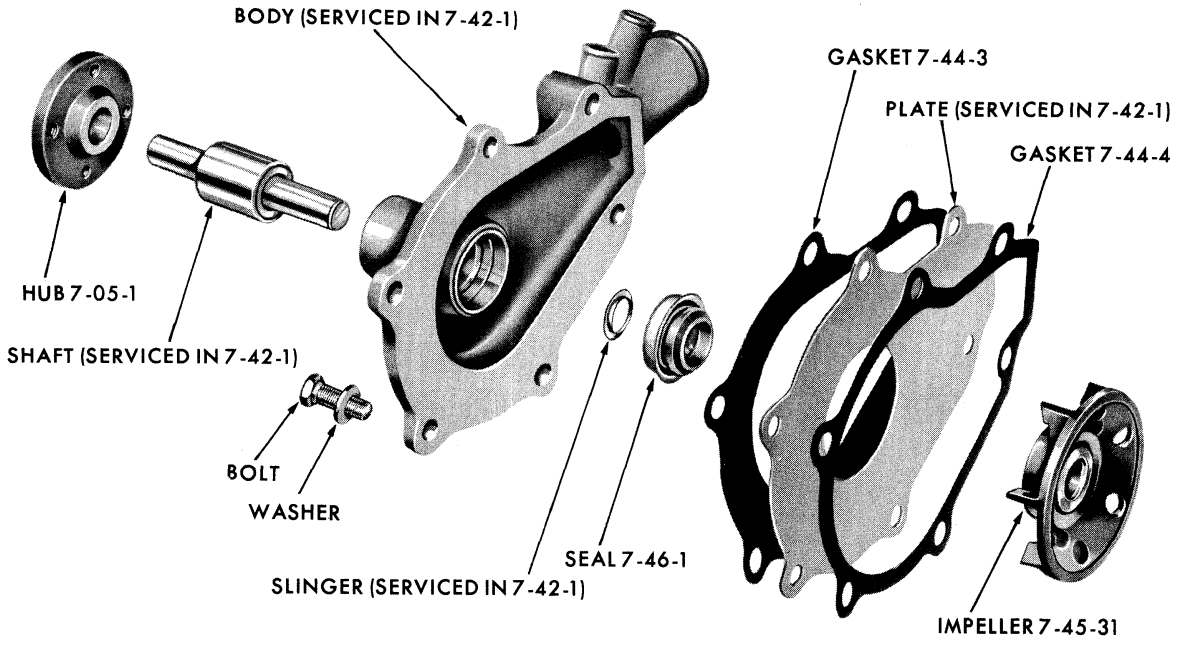


WATER PUMP - 6 CYLINDER

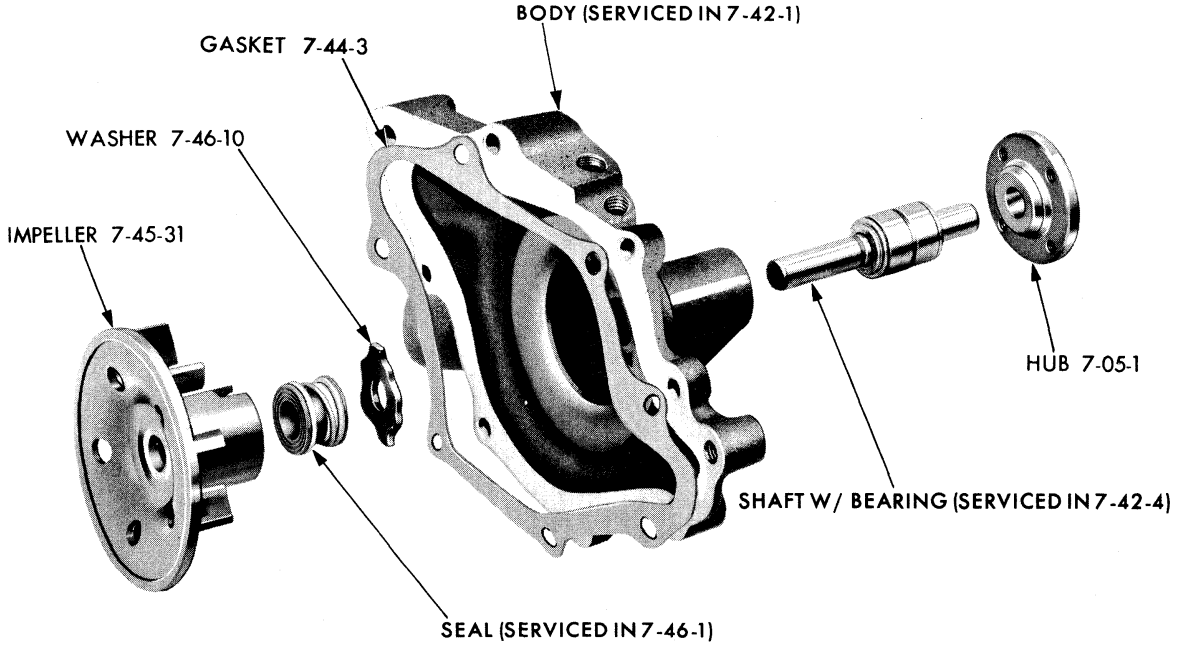


WATER PUMP (V8 CYLINDER) - PLYMOUTH PP2 (WITHOUT AIR CONDITIONING)



MyMopar.com

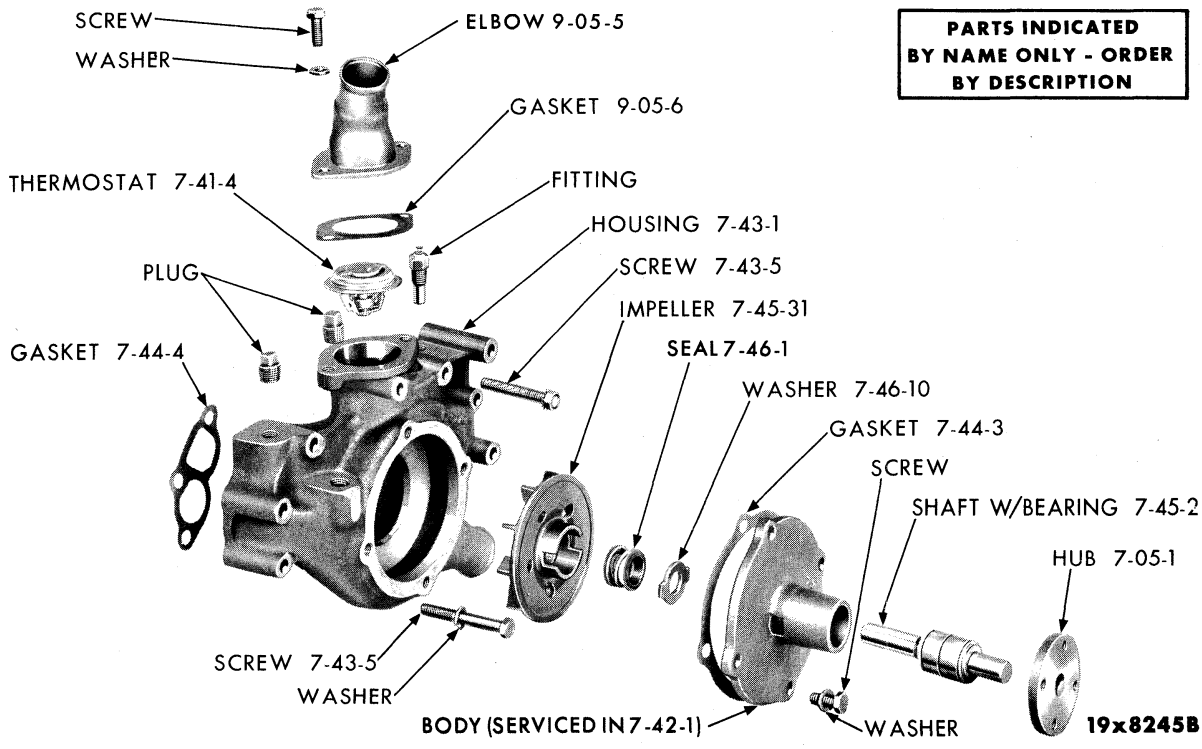


PARTS INDICATED BY NAME ONLY - ORDER BY DESCRIPTION

WATER PUMP (V8 CYLINDER) - EXCEPT PLYMOUTH PP2 (WITHOUT AIR CONDITIONING)

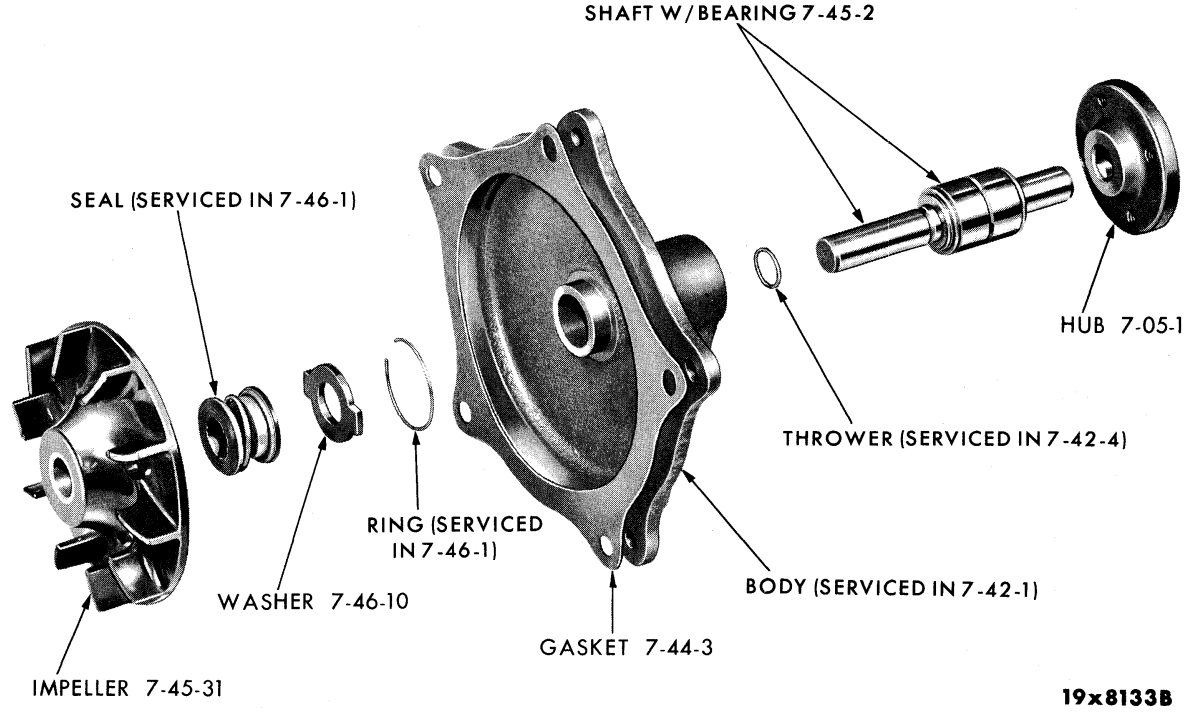


WATER PUMP - V8 CYLINDER (WITH AIR CONDITIONING)



MyMopar.com

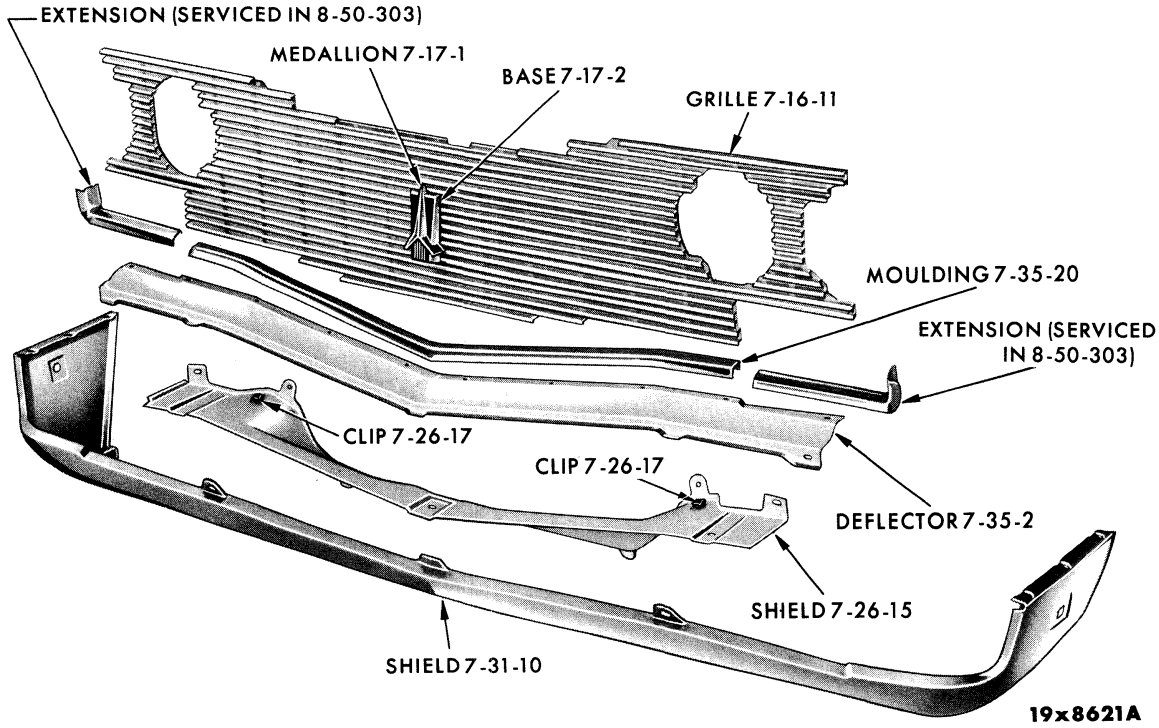


GRILLE - PLYMOUTH PP1-2

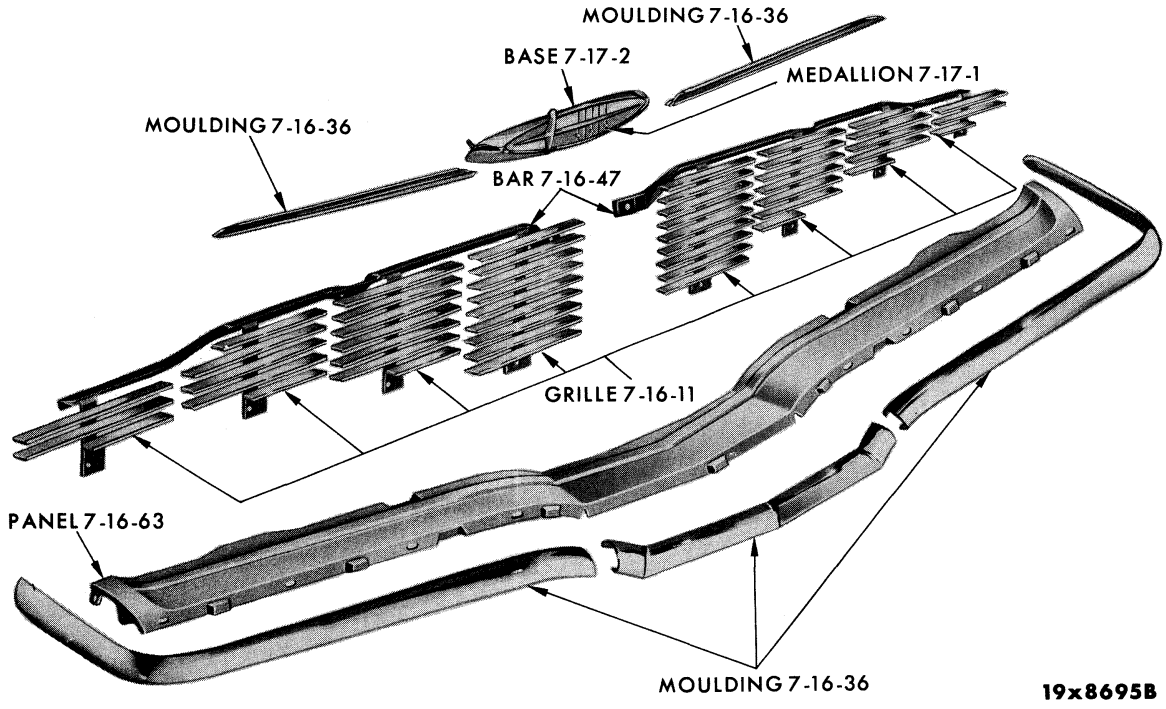


GRILLE - DODGE PD1-2


MyMopar.com

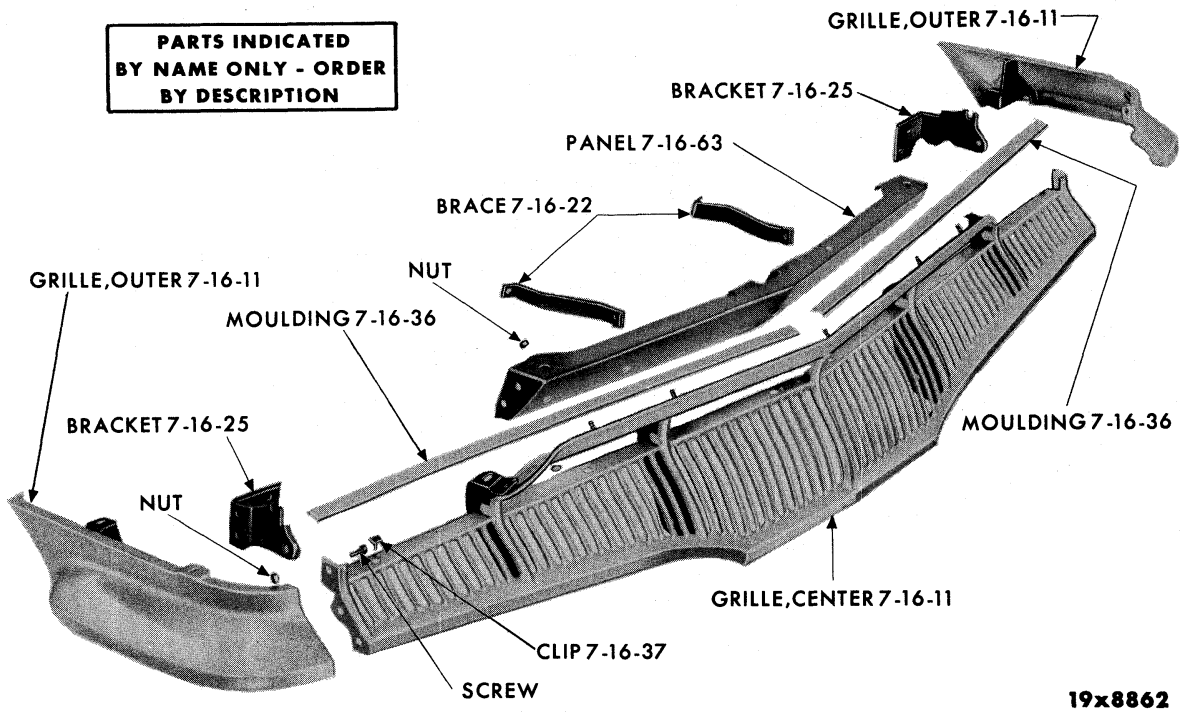


GRILLE - DODGE PD3-4

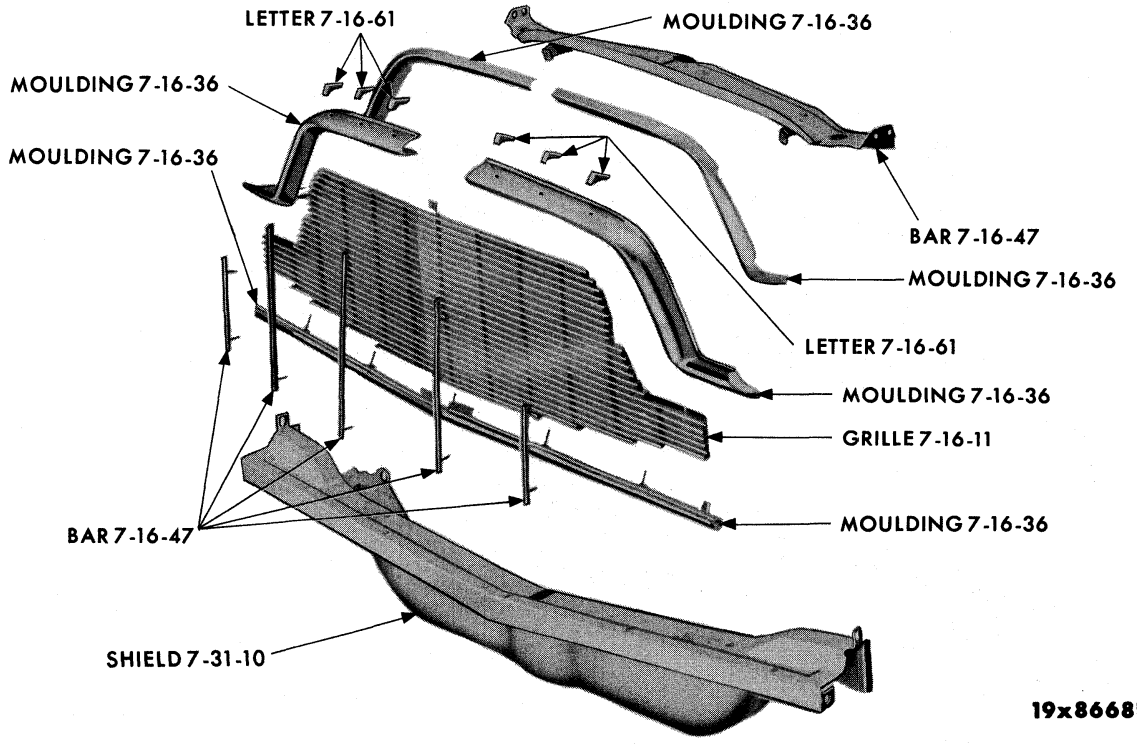


GRILLE - DESOTO PS1-3



MyMopar.com

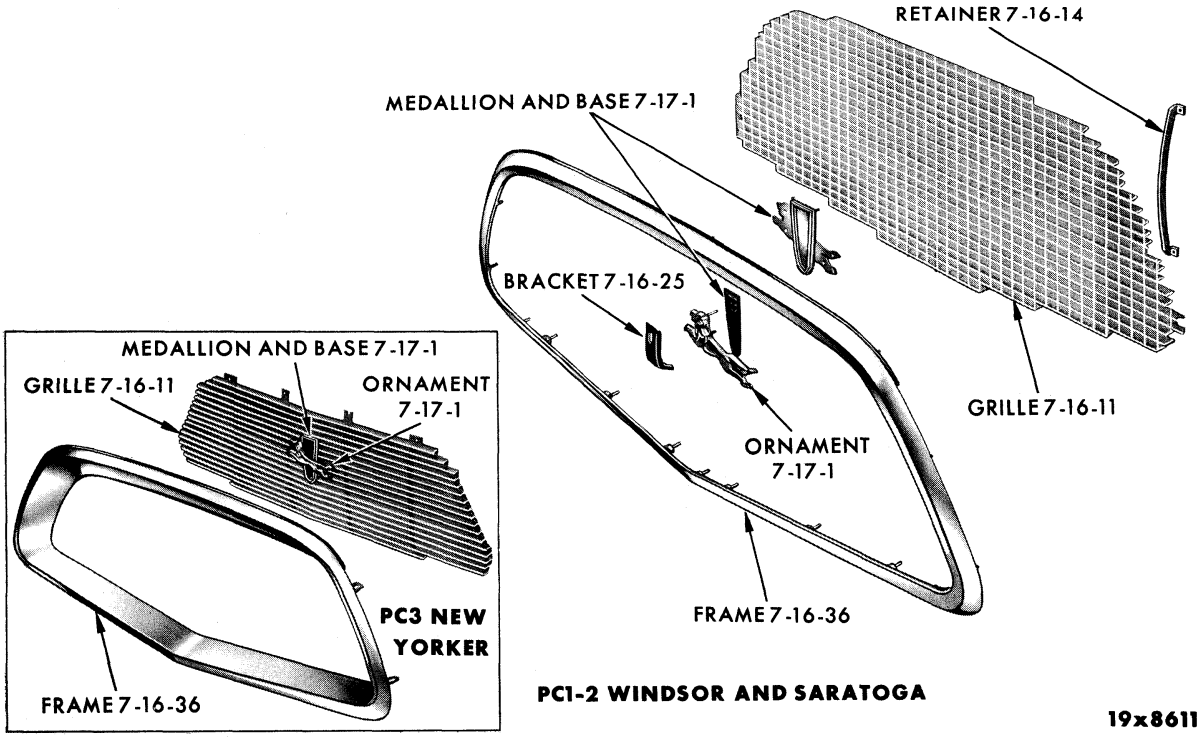


GRILLE - CHRYSLER PC1-2-3

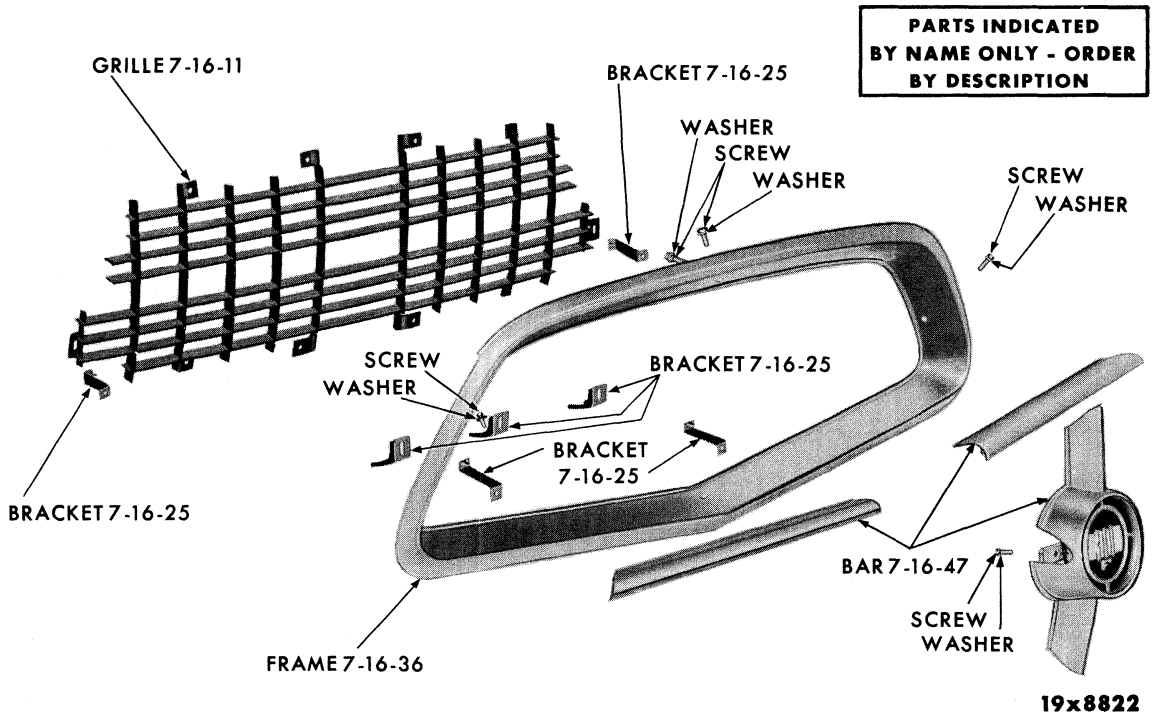


GRILLE - CHRYSLER PC300F



MyMopar.com

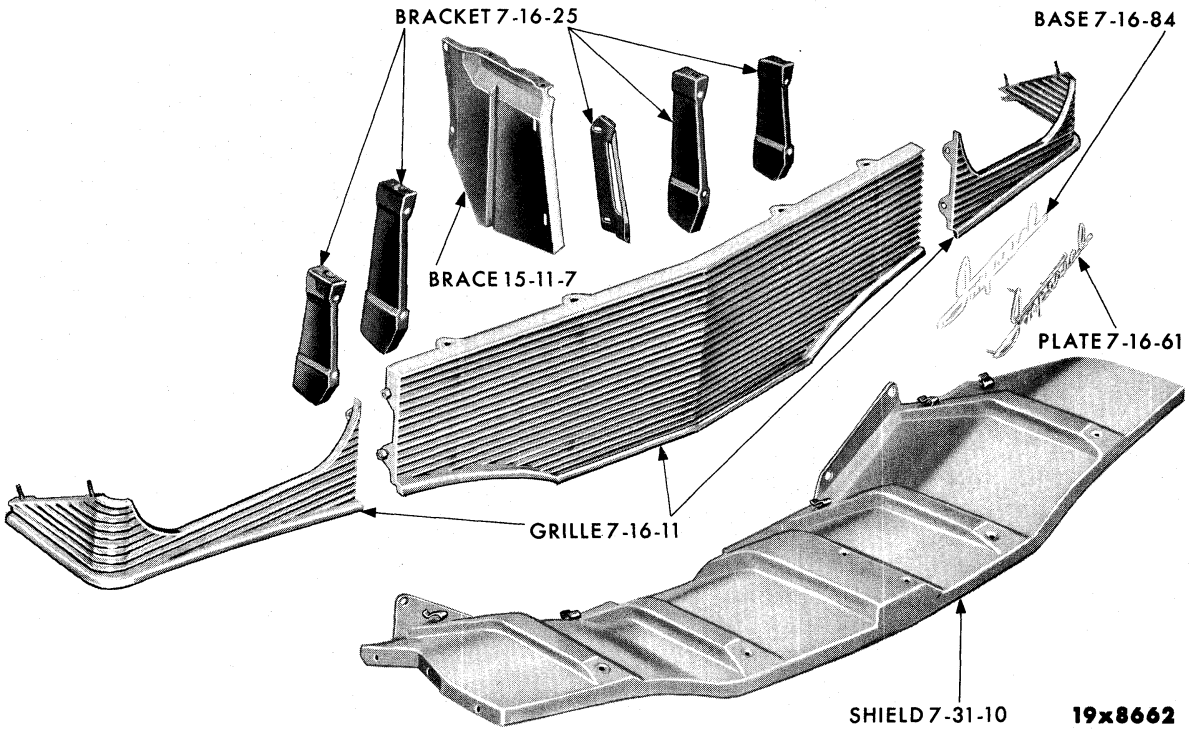


GRILLE - IMPERIAL PY1

## NOTES



MyMopar.com

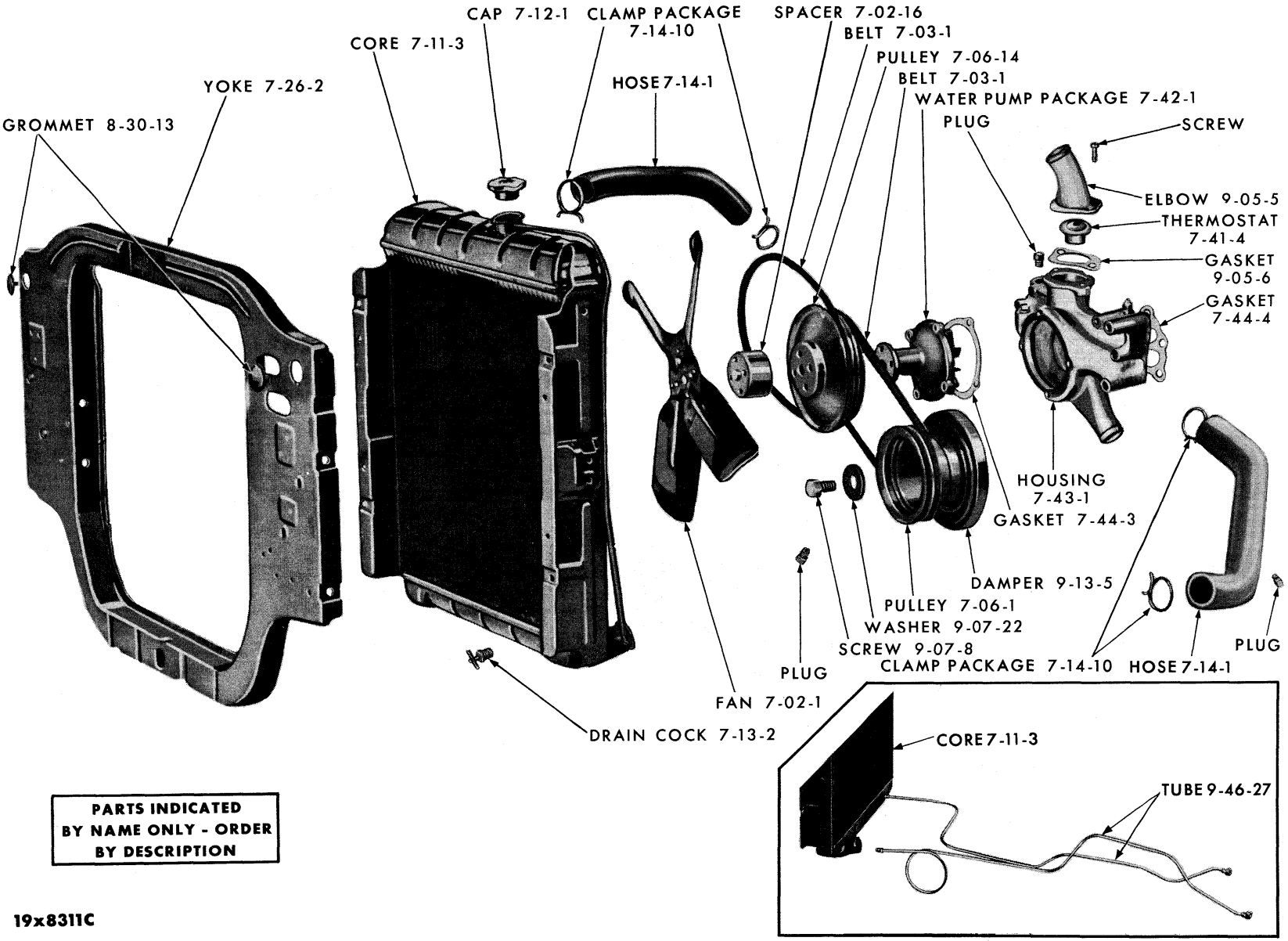


**PARTS INDICATED BY NAME ONLY - ORDER BY DESCRIPTION**

19x8311C

COOLING SYSTEM - EXCEPT PLYMOUTH PP1-2 AND DODGE PD3

MyMopar.com

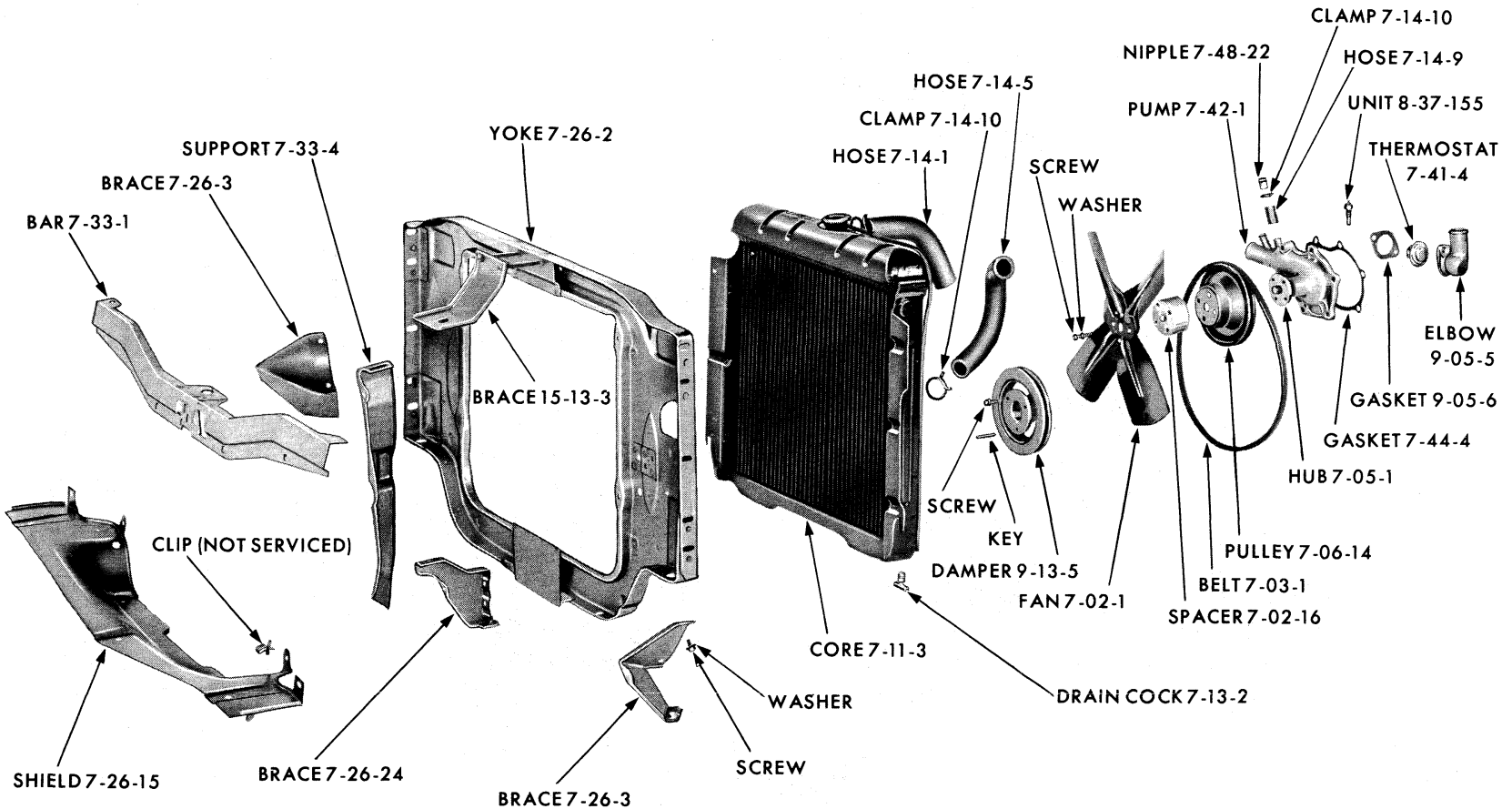


**PARTS INDICATED BY NAME ONLY - ORDER BY DESCRIPTION**

19x8845



COOLING SYSTEM - PLYMOUTH PP1

MyMopar.com

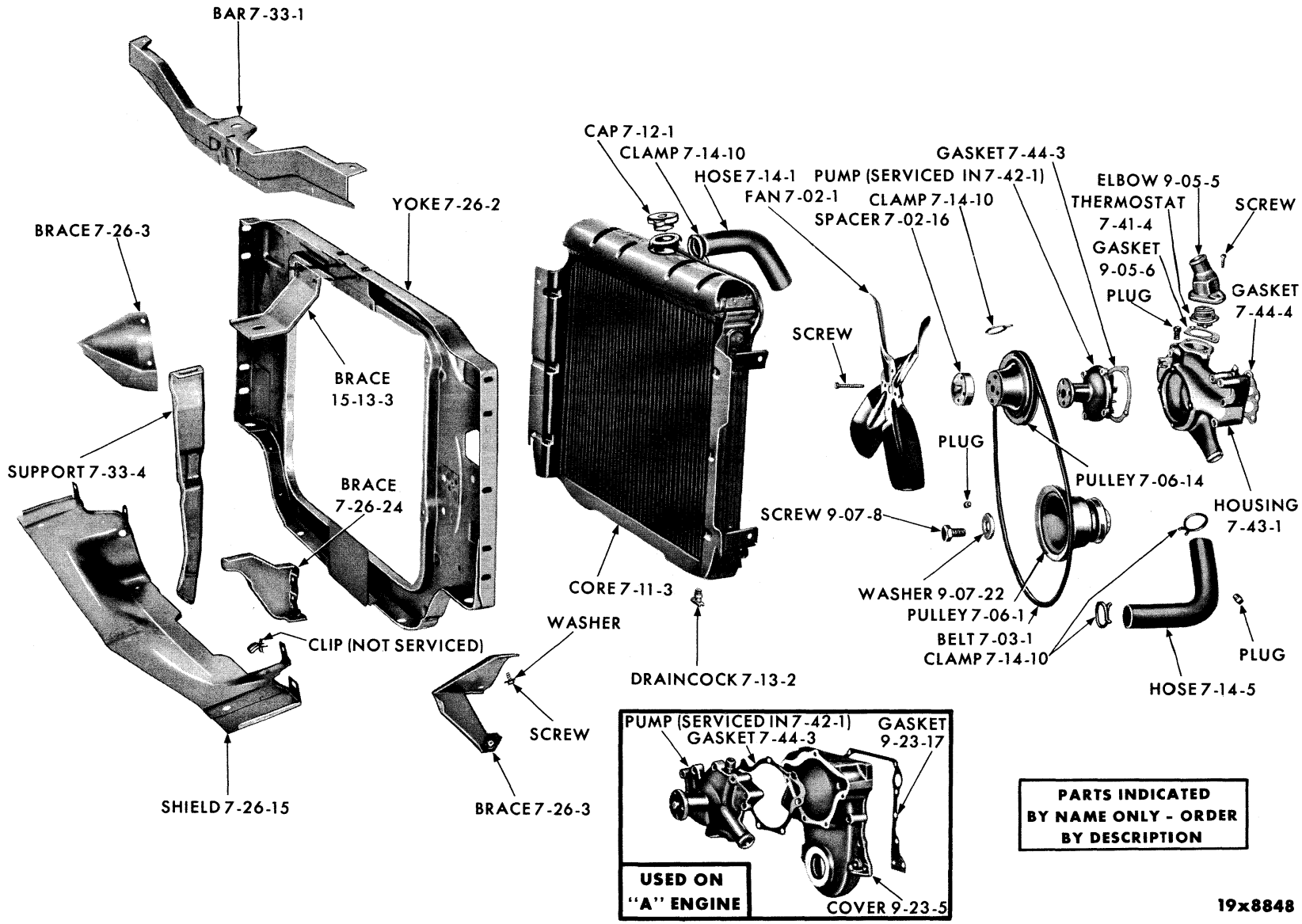




MyMopar.com

Printed in U.S.A.
Page 7-6C
April 20, 1960.

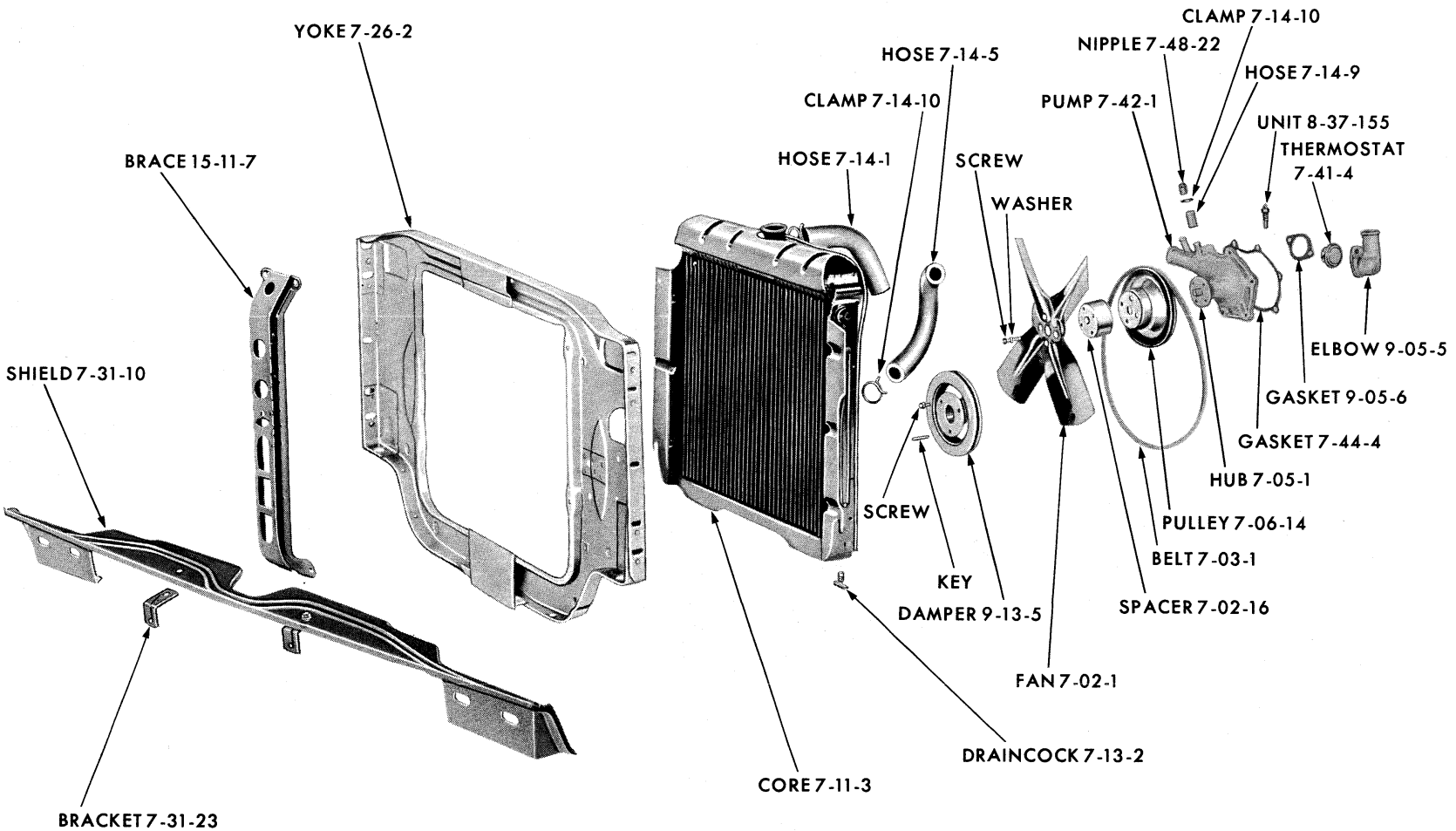


19x8863

COOLING SYSTEM - DODGE PD3

MyMopar.com

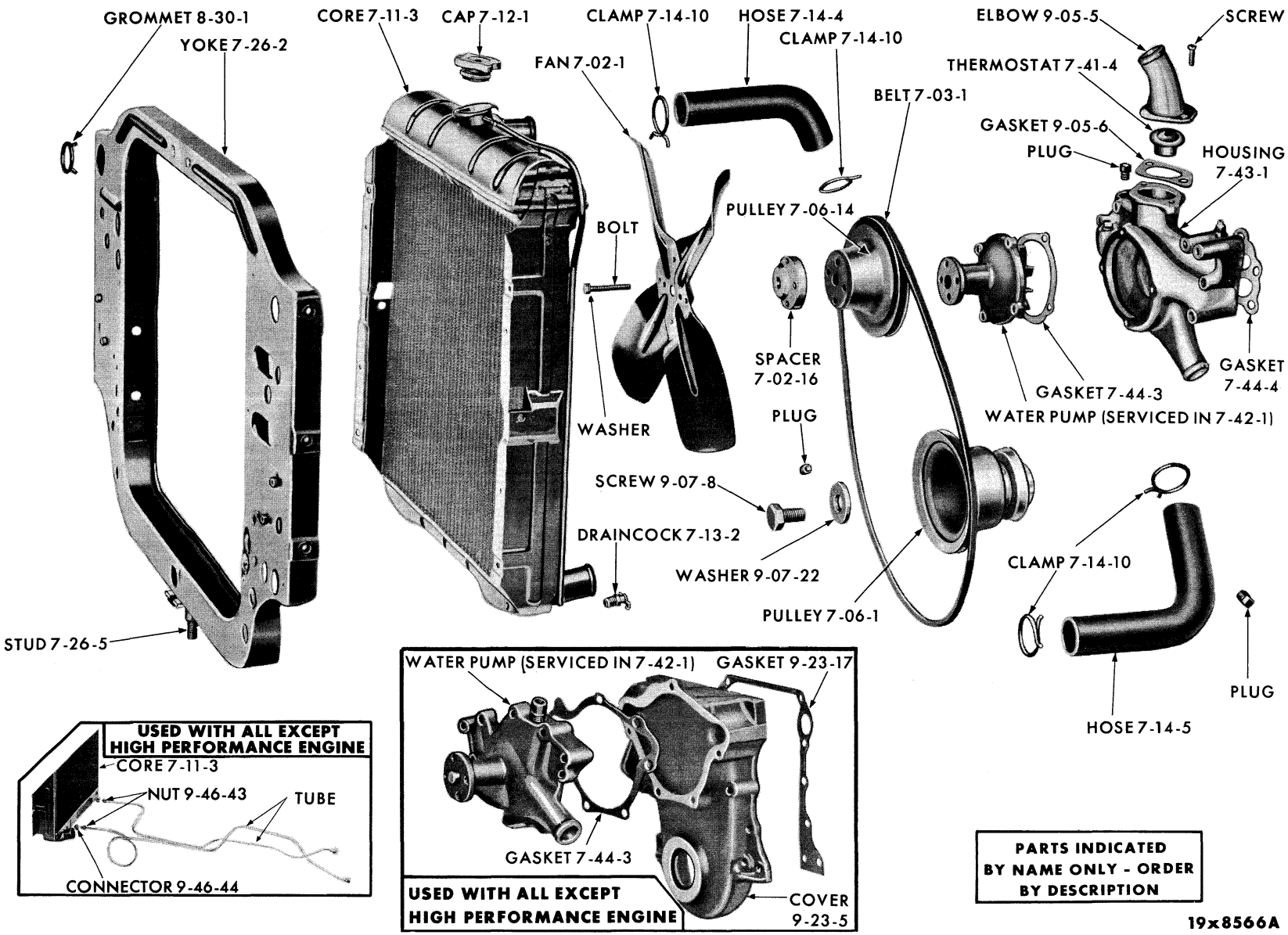




MyMopar.com

Printed in U.S.A.
Page 7-6E
December 9, 1960.

| CODE | PART NAME AND DESCRIPTION | NO. OF CYL. | PLYMOUTH | DODGE | DESOTO | CHRYSLER AND IMPERIAL | PER CAR | PART NUMBER |
|---|---|---|---|---|---|---|---|---|

## NOTES



MyMopar.com

# GROUP 7 - COOLING

## 7-02-0 FAN ASSEMBLY

| CODE | PART NAME AND DESCRIPTION | NO. OF CYL. | PLYMOUTH | DODGE | DESOTO | CHRYSLER AND IMPERIAL | PER CAR | PART NUMBER |
|---|---|---|---|---|---|---|---|---|
| 7-02-1 | FAN, PP1, PD3, 4 Blade | 6 | 60 | 60 | - | - | 1 | 1947 907 |
| | w/o Air Conditioning, PP2, PD1, PD2, PD4, PS1, PS3, PC1, PC2, PC3, PY1, 4 Blade | 8 | 60 | 60 | 60 | 60 | 1 | 1735 939 |
| | PC3-300, 7 Blade | 8 | - | - | - | 60 | 1 | 2121 013 |
| | w/Air Conditioning, PP2, PD4, 7 Blade | 8 | 60 | 60 | - | - | 1 | 2120 208 |
| | PP2, PD4, High Performance, PD1, PD2, PS1, PS3, PC1, 7 Blade | 8 | 60 | 60 | 60 | 60 | 1 | 2121 013 |
| | PC2, PC3, PC3-300, PY1, 7 Blade | 8 | - | - | - | 60 | 1 | 2121 014 |
| | w/Model E Air Conditioning | 8 | 60 | 60 | 60 | 60 | 1 | 1985 513 |
| 7-02-16 | SPACER, PP1, PD3, 1 5/8" thick | 6 | 60 | 60 | - | - | 1 | *2120 510 |
| | PP2, PD4, 2 3/8" thick | 8 | 60 | 60 | - | - | 1 | 2120 130 |
| | PP2, PD4, High Performance PD1, PD2, PS1, PS3, PC1, PC2, PC3, PY1, 1 5/8" thick | 8 | 60 | 60 | 60 | 60 | 1 | 2120 510 |
| | PC2, PC3, PY1, 1 3/4" thick | 8 | - | - | - | 60 | 1 | 1674 746 |
| | w/Model E Air Conditioning, PP2, PD4, High Performance, PD1, PD2, PS1, PS3, PC1, PC2, PC3, PY1 | 8 | 60 | 60 | 60 | 60 | 1 | 1730 155 |

## 7-03-0 FAN AND RELATED DRIVE BELTS

NOTE: All matched belts should be replaced in sets only. Where power steering is not used omit steering pump belt.

| 7-03-1 BELTS | Eng. to Fan to Generator | Engine to Strg. Pump | Engine to Fan | Fan to Generator | Eng. to Fan to Strg. Pump |
|---|---|---|---|---|---|
| PP1, PD3, w/35 amp. Generator, UP TO | 1558 426(1) | ---- --- | ---- --- | ---- --- | 2128 751 |
| PP2, PD3, w/30 amp., 40 amp. and 50 amp. Generator, UP TO | 1632 586(1) | ---- --- | ---- --- | ---- --- | 2128 751 |
| PP1, PD3, w/Alternator, UP TO | 1821 221(1) | ---- --- | ---- --- | ---- --- | 2128 751 |
| PD3, w/35 amp. Generator, AFTER | 2129 078 | ---- --- | ---- --- | ---- --- | 2128 751 |
| PD3, w/30 amp., 40 amp. and 50 amp. Generator, AFTER | 2129 079 | ---- --- | ---- --- | ---- --- | 2128 751 |
| PD3, w/Alternator, AFTER | 2129 080 | ---- --- | ---- --- | ---- --- | 2128 751 |
| PP2, PD4, w/30 amp. and 50 amp. Generator | ---- --- | *1854 895 | 1821 643 | 1550 179 | ---- --- |
| PP2, PD4, w/35 amp. Generator | 1737 927 | *1854 895 | ---- --- | ---- --- | ---- --- |
| PP2, PD4, w/40 amp. Generator | ---- --- | *1854 895 | 1821 643 | 1821 221 | ---- --- |
| PP2, PD4, w/50 amp. Alternator | 2121 221 | *1854 895 | ---- --- | ---- --- | ---- --- |
| PP2, PD4, w/60 amp. Alternator | 2121 222 | *1854 895 | ---- --- | ---- --- | ---- --- |
| PP2, PD4, High Performance, PD1, PD2, PS1, PS3, w/30 amp. and 50 amp. Generator | 1821 138 | *1827 431(2) | ---- --- | ---- --- | ---- --- |
| PP2, PD4, High Performance, PD1, PD2, PS1, PS3, w/35 amp. Generator | 1551 007 | *1827 431(2) | ---- --- | ---- --- | ---- --- |
| PP2, PD4, High Performance, PD1, PD2, PS1, PS3, PC1, PC2, PC3, PC3-300, w/40 amp. Generator | 1673 645 | *1827 431(2) | ---- --- | ---- --- | ---- --- |
| PC1, PC2, PC3, PC3-300, w/30 amp. Generator | 1674 677 | *1827 431(2) | ---- --- | ---- --- | ---- --- |
| PC1, PC2, PC3, PC3-300, w/35 amp. Generator | 1821 138 | *1827 431(2) | ---- --- | ---- --- | ---- --- |
| PP2, PD4, High Performance, PD1, PD2, PS1, PS3, w/Alternator | *2121 221 | *1827 431(2) | ---- --- | ---- --- | ---- --- |
| PY1 w/30 amp. Generator | 1674 677 | *1678 280(2) | ---- --- | ---- --- | ---- --- |
| PY1 w/35 amp. Generator | 1821 138 | *1678 280(2) | ---- --- | ---- --- | ---- --- |
| PY1 w/40 amp. Generator | 1673 645 | *1678 280(2) | ---- --- | ---- --- | ---- --- |
| PY1 w/Alternator | 1555 419 | *1678 280(2) | ---- --- | ---- --- | ---- --- |
| PP2, PD4, High Performance, PD1, PD2, PS1, PC1, PC2, PC3, PC3-300, PY1 | ---- --- | ⊟2129 277(3) | ---- --- | ---- --- | ---- --- |

NOTE 1: PD3 Serial No. 132642 Det. Blt., 106378 L. A. Blt., PP1 Serial No. 106696 L. A. Blt.

NOTE 2: Use with 1947 710 Strg. Pump

NOTE 3: Use with 2196 082 Strg. Pump



MyMopar.com

## 7-03-0 FAN AND RELATED DRIVE BELTS - Cont'd

| 7-03-1 BELTS - Cont'd<br>MODELS WITH AIR CONDITIONING | Engine to Compressor to Generator | Engine to Fan | Engine to Strg. Pump | Engine to Compressor to Jackshaft | Jackshaft to Generator |
|---|---|---|---|---|---|
| PP1, PD3, Eng. to Fan to Generator | ---- --- | *1558 426 | ---- --- | ---- --- | ---- --- |
| PP1, PD3 | ---- --- | ---- --- | *2128 751 | ---- --- | ---- --- |
| PP1, PD3, Eng. to Compressor | ---- --- | ---- --- | ---- --- | ⊟1991 604 | ---- --- |
| PP2, PD4, w/30 amp. and 50 amp. Generator | ---- --- | 1821 643 | *1854 895 | 1944 881 | 2120 058 |
| PP2, PD4, w/35 amp. Generator | ---- --- | 1821 643 | *1854 895 | 1944 881 | 1946 922 |
| PP2, PD4, w/40 amp. Generator | ---- --- | 1821 643 | *1854 895 | 1944 881 | 2120 045 |
| PP2, PD4, High Performance, PD1, PD2, PS1, PS3, PC1, PC2, PC3, PC3-300, w/30 amp., 35 amp., and 50 amp. Generator | 1947 022 | 1558 058 | 1827 431 | ---- --- | ---- --- |
| PP2, PD4, High Performance, PD1, PD2, PS1, PS3, PC1, PC2, PC3, PC3-300, w/40 amp. Generator | 1947 025 | 1558 058 | 1827 431 | ---- --- | ---- --- |
| PY1, w/Alternator | 2129 284 | 1558 058 | 1678 280 | ---- --- | ---- --- |
| w/Model E Air Conditioning, PP2, PD4 | ---- --- | 1401 633 | *1854 895 | 1947 132 | 1946 921 |
| PP2, PD4, High Performance, PD1, PD2, PS1, PS3 | ---- --- | 1327 471 | 1827 431 | 1944 881 | 1946 921 |
| PC1, PC2, PC3, PY1 | ---- --- | 1327 471 | 1827 431 | 1947 132 | 1946 921 |

| CODE | PART NAME AND DESCRIPTION | NO. OF CYL. | PLYMOUTH | DODGE | DESOTO | CHRYSLER AND IMPERIAL | PER CAR | PART NUMBER |
|---|---|---|---|---|---|---|---|---|
| **7-04-0** | **FAN BELT IDLER PULLEY** | | | | | | | |
| 7-04-1 | PULLEY | 8 | 60 | 60 | 60 | 60 | 1 | 2240 397 |
| 7-04-5 | BRACKET, PP2, PD4 | 8 | 60 | 60 | - | - | 1 | 1859 571 |
| | PP2, PD4, High Performance, PD1, PD2, PS1, PS3, PC1, PC2, PC3, PC3-300, PY1 | 8 | 60 | 60 | 60 | 60 | 1 | 1851 401 |
| 7-04-10 | SPACER, Idler Pulley Bracket, w/Air Conditioning, PP2, PD4, High Performance, PD1, PD2, PS1, PS3, PC1, PC2, PC3, PC3-300, PY1 | 8 | 60 | 60 | 60 | 60 | 1 | 1947 756 |
| 7-04-16 | SPACER, Idler Pulley Bearing, w/Air Conditioning, PP2, PD4 | 8 | 60 | 60 | - | - | 1 | 2120 520 |
| **7-05-0** | **FAN PULLEY HUB** | | | | | | | |
| 7-05-1 | HUB | 6-8 | 60 | 60 | 60 | 60 | 1 | 1634 288 |
| **7-06-0** | **FAN DRIVE AND DRIVEN PULLEYS** | | | | | | | |
| 7-06-1 | PULLEY, Fan Drive, w/Power Steering, PP1, PD3 | 6 | 60 | 60 | - | - | 1 | 2128 570 |
| | w/Air Conditioning, PP1, PD3 | 6 | 60 | 60 | - | - | 1 | ⊟1993 688 |
| | w/Std. Trans., w/o Power Steering, PP2, PD4 | 8 | 60 | 60 | - | - | 1 | 1821 411 |
| | w/Std. Trans., w/Power Steering, PP2, PD4 | 8 | 60 | 60 | - | - | 1 | 1855 152 |
| | w/PowerFlite and Auto. 3 Speed Trans., w/o Power Steering, PP2, PD4 | 8 | 60 | 60 | - | - | 1 | 1859 671 |
| | w/PowerFlite and Auto. 3 Speed Trans., w/Power Steering, PP2, PD4 | 8 | 60 | 60 | - | - | 1 | 1859 680 |
| | w/Air Conditioning, PP2, PD4 | 8 | 60 | 60 | - | - | 1 | 1859 580 |
| | w/o Power Steering, PP2, PD4, High Performance, PD1, PD2, PS1, PS3, PC1, PC2, PC3 | 8 | 60 | 60 | 60 | 60 | 1 | 1821 449 |
| | w/Power Steering, PP2, PD4, High Performance, PD1, PD2, PS1, PS3, PC1, PC2, PC3, PC3-300, PY1 | 8 | 60 | 60 | 60 | 60 | 1 | *1826 053 |
| | w/Air Conditioning, PP2, PD4, High Performance, PD1, PD2 | 8 | 60 | 60 | 60 | - | 1 | 1859 252 |
| | w/Air Conditioning | 8 | - | - | - | 60 | 1 | 2128 545 |
| | w/Model E Air Conditioning | 8 | - | - | - | 60 | 1 | 1859 252 |
| 7-06-3 | HUB, Fan Drive Pulley, w/Air Conditioning, PP2, PD4 | 8 | 60 | 60 | - | - | 1 | 1733 805 |

★ Indicates use as required. Numerals in parentheses ( ) refer to notes. Printed in U.S.A.
⊟ Indicates parts not listed in any previous parts book. Prices and specifications subject to change without notice.
Dec. 9, 1960 Supersedes April 20, 1960. Page 7-8 * Indicates change or addition.

MyMopar.com

| CODE | PART NAME AND DESCRIPTION | NO. OF CYL. | PLYMOUTH | DODGE | DESOTO | CHRYSLER AND IMPERIAL | PER CAR | PART NUMBER |
|---|---|---|---|---|---|---|---|---|
| **7-06-0** | **FAN DRIVE AND DRIVEN PULLEYS - Cont'd** | | | | | | | |
| 7-06-14 | PULLEY, Fan Driven | 6 | 60 | 60 | - | - | 1 | 1947 721 |
| | PP2, PD4 | 8 | 60 | 60 | - | - | 1 | 1852 582 |
| | w/o Air Conditioning, PP2, PD4, High Performance, PD1, PD2 | 8 | 60 | 60 | 60 | 60 | 1 | 1821 452 |
| | w/Air Conditioning, PP2, PD4, High Performance, PD1, PD2 | 8 | 60 | 60 | 60 | 60 | 1 | 2121 016 |
| | w/Model E Air Conditioning, PP2, PD4, High Performance, PD1, PD2, PS1, PS3, PC1, PC2, PC3, PY1 | 8 | 60 | 60 | 60 | 60 | 1 | 1981 854 |
| **7-07-0** | **FAN FLUID DRIVE UNIT** | | | | | | | |
| 7-07-1 | UNIT, Fan Drive, w/Air Conditioning, PP2, PD4, High Performance, PD1, PD2, PS1, PS3, PC1 | 8 | 60 | 60 | 60 | 60 | 1 | 2121 724 |
| | PC2, PC3, PY1 | 8 | - | - | - | 60 | 1 | *2203 024 |
| | w/o Air Conditioning, PC3-300 | 8 | - | - | - | 60 | 1 | 2121 724 |
| **7-08-0** | **RADIATOR FAN SHROUD** | | | | | | | |
| 7-08-2 | SHROUD, Upper, w/Air Conditioning, PC1 | 8 | 60 | 60 | 60 | 60 | 1 | 1902 720 |
| | Lower, w/Air Conditioning, PC1 | 8 | 60 | 60 | 60 | 60 | 1 | 1903 600 |
| | Upper, w/Air Conditioning, PC2, PC3, PY1 | 8 | - | - | - | 60 | 1 | 1686 412 |
| | Lower, w/Air Conditioning, PC2, PC3, PY1 | 8 | - | - | - | 60 | 1 | 1686 414 |
| 7-08-7 | BUMPER, w/Air Conditioning, PC2, PC3, PY1 | 8 | - | - | - | 60 | 4 | 1624 506 |
| 7-08-13 | BRACKET, w/Air Conditioning, Right, PC2, PC3, PY1 | 8 | - | - | - | 60 | 1 | 1686 451 |
| | Left, PC2, PC3, PY1 | 8 | - | - | - | 60 | 1 | 1686 453 |
| 7-08-16 | NUT, Fan Shroud Bracket, w/Air Conditioning, PC2, PC3, PY1 | 8 | - | - | - | 60 | 4 | 6010 006 |

## 7-11-0 RADIATOR CORE

7-11-3 RADIATOR CORE

| Model | Standard | High Altitude | Air Conditioning |
|---|---|---|---|
| PP1 w/Std. Trans. | 1903 334 | 1903 338 | ---- --- |
| PD3 w/Std. Trans. | 1903 336 | 1903 326 | ---- --- |
| PP1, w/Auto. Trans. | 1903 335 | ---- --- | ---- --- |
| PD3, w/Auto. Trans. | 1903 337 | ---- --- | ---- --- |
| PP2, PD4 | 1903 326 | 1903 324 | 1903 324 |
| PP2 High Performance, PD1, PD1-D500, PD2, PD2-D500, PD4-D500, PD4 High Performance, PS1, PS1 High Performance, PS3, PC1 | 1903 369 | 1903 370 | 1903 371 |
| PC2, PC3, PC3-300, PY1 | 1903 356 | 1903 357 | 1903 358 |

| CODE | PART NAME AND DESCRIPTION | NO. OF CYL. | PLYMOUTH | DODGE | DESOTO | CHRYSLER AND IMPERIAL | PER CAR | PART NUMBER |
|---|---|---|---|---|---|---|---|---|
| 7-11-4 | SCREW, Radiator Core to Yoke, PC1, PC2, PC3 | 6-8 | 60 | 60 | 60 | 60 | 4 | 6022 032 |
| **7-12-0** | **RADIATOR FILLER CAP** | | | | | | | |
| 7-12-1 | CAP | 6-8 | 60 | 60 | 60 | 60 | 1 | *1686 107 |
| **7-13-0** | **RADIATOR DRAIN COCK** | | | | | | | |
| 7-13-2 | DRAIN COCK, PC1 | 6-8 | 60 | 60 | 60 | 60 | 1 | 1686 198 |



MyMopar.com

| CODE | PART NAME AND DESCRIPTION | NO. OF CYL. | PLYMOUTH | DODGE | DESOTO | CHRYSLER AND IMPERIAL | PER CAR | PART NUMBER |
|---|---|---|---|---|---|---|---|---|
| **7-14-0** | **RADIATOR HOSE** | | | | | | | |
| 7-14-4 | HOSE, Radiator Inlet w/o Power Steering PP1, PD3 | 6 | 60 | 60 | - | - | 1 | *1881 804 |
| | w/Power Steering PP1, PD3 | 6 | 60 | 60 | - | - | 1 | 1881 812 |
| | w/o Air Conditioning PP1, w/Eng. Stamped 225, PP2, PD1, PS1, w/Eng. Stamped 361, PD2, PC1, PC2, w/Eng. Stamped 383, PC3, PY1, w/Eng. Stamped 413 | 8 | 60 | 60 | 60 | 60 | 1 | 1881 804 |
| | w/Air Conditioning PP2, PS1, w/Eng. Stamped 361, PD2, PS1, PS3, PC1, PC2, w/Eng. Stamped 383, PC1, PY1, w/Eng. Stamped 413 | 8 | 60 | 60 | 60 | 60 | 1 | 1881 806 |
| | w/o Air Conditioning PP2, w/Eng. Stamped 318 | 8 | 60 | 60 | - | - | 1 | 1881 805 |
| 7-14-5 | HOSE, Radiator Outlet, w/o Power Steering, PP2, PD4, w/Eng. Stamped 318 | 6-8 | 60 | 60 | - | - | 1 | 1881 805 |
| | w/o Air Conditioning PP2, PD1, PS1, w/Eng. Stamped 361, PC1 w/Eng. Stamped 383 | 8 | 60 | 60 | 60 | 60 | 1 | 2120 214 |
| | w/o Air Conditioning PD2, PC2, w/Eng. Stamped 383, PC3, PY1, w/Eng. Stamped 413 | 8 | - | 60 | - | 60 | 1 | 1881 809 |
| | w/Air Conditioning PP2, PD1, PS1, w/Eng. Stamped 361, PC1, w/Eng. Stamped 383 | 8 | 60 | 60 | 60 | 60 | 1 | 2120 214 |
| | w/Air Conditioning PD2, PC2, w/Eng. Stamped 383, PC3, PY1, w/Eng. Stamped 413 | 8 | - | 60 | - | 60 | 1 | 1881 809 |
| | w/and w/o Power Steering, PP1, PD3, w/Eng. Stamped 225 | 6 | 60 | 60 | - | - | 1 | 1881 805 |
| 7-14-9 | HOSE, Water Pump By-Pass | 6 | 60 | 60 | - | - | 1 | 1315 466 |
| | PP2, PD4 | 8 | 60 | 60 | - | - | 1 | 1730 366 |
| 7-14-10 | CLAMP PACKAGE, Radiator Hose, Small | 6-8 | 60 | 60 | 60 | 60 | ★ | 1450 499 |
| | Large | 6-8 | 60 | 60 | 60 | 60 | ★ | 1450 500 |
| **7-16-0** | **RADIATOR GRILLE** | | | | | | | |
| 7-16-11 | GRILLE | 6-8 | 60 | - | - | - | 1 | 1863 822 |
| | Right, Outer, PD3, PD4 | 6-8 | - | 60 | - | - | 1 | 1903 638 |
| | Left, Outer, PD3, PD4 | 6-8 | - | 60 | - | - | 1 | 1903 639 |
| | Center, PD3, PD4 | 6-8 | - | 60 | - | - | 1 | 1903 640 |
| | Right, Center No. 1, PD1, PD2 | 8 | - | 60 | - | - | 1 | 1903 550 |
| | Left, Center No. 1, PD1, PD2 | 8 | - | 60 | - | - | 1 | 1903 551 |
| | Right, Intermediate No. 2, PD1, PD2 | 8 | - | 60 | - | - | 1 | 1903 552 |
| | Left, Intermediate No. 2, PD1, PD2 | 8 | - | 60 | - | - | 1 | 1903 553 |
| | Right, Intermediate No. 3, PD1, PD2 | 8 | - | 60 | - | - | 1 | 1903 554 |
| | Left, Intermediate No. 3, PD1, PD2 | 8 | - | 60 | - | - | 1 | 1903 555 |
| | Right, Outer, PD1, PD2 | 8 | - | 60 | - | - | 1 | 1903 556 |
| | Left, Outer, PD1, PD2 | 8 | - | 60 | - | - | 1 | 1903 557 |
| | Grille, PS1, PS3 | 8 | - | - | 60 | - | 1 | 1903 702 |
| | PC1, PC2 | 8 | - | - | - | 60 | 1 | 1863 787 |
| | PC3 | 8 | - | - | - | 60 | 1 | 1863 783 |
| | PC3-300 | 8 | - | - | - | 60 | 1 | 1903 237 |
| | Right, Outer, PY1 | 8 | - | - | - | 60 | 1 | 1863 002 |
| | Left, Outer, PY1 | 8 | - | - | - | 60 | 1 | 1863 003 |
| | Center, PY1 | 8 | - | - | - | 60 | 1 | 1863 024 |
| 7-16-12 | SCREW, w/WASHER | 6-8 | - | 60 | - | - | ★ | 1903 976 |
| 7-16-14 | RETAINER, Outer, PC1, PC2 | 8 | - | - | - | 60 | 2 | 1903 241 |
| | Intermediate, PC1, PC2 | 8 | - | - | - | 60 | 2 | 1903 242 |
| | Inner, PC1, PC2 | 8 | - | - | - | 60 | 2 | 1903 243 |
| 7-16-22 | BRACE, Grill to Yoke, Right PD3, PD4 | 6-8 | - | 60 | - | - | 1 | 1903 656 |
| | Grille to Yoke, Left PD3, PD4 | 6-8 | - | 60 | - | - | 1 | 1903 657 |
| | Grille to Yoke, PD1, PD2 | 8 | - | 60 | - | - | 2 | 1903 634 |
| | Grille, Intermediate | 8 | - | - | 60 | - | 4 | 1903 735 |
| | Grille, Outer | 8 | - | - | 60 | - | 2 | 1903 740 |



MyMopar.com

## 7-16-0 RADIATOR GRILLE - Cont'd

| CODE | PART NAME AND DESCRIPTION | NO. OF CYL. | PLYMOUTH | DODGE | DESOTO | CHRYSLER AND IMPERIAL | PER CAR | PART NUMBER |
|---|---|---|---|---|---|---|---|---|
| 7-16-25 | BRACKET, Lower Quarter Panel to Fender Shield, Right, PD1, PD2 | 8 | - | 60 | - | - | 1 | 1903 122 |
| | Left, PD1, PD2 | 8 | - | 60 | - | - | 1 | 1903 123 |
| | Lower Center Panel to Fender Shield, Right | 6-8 | - | 60 | - | - | 1 | 1903 290 |
| | Left | 6-8 | - | 60 | - | - | 1 | 1903 291 |
| | Lower Center Panel, Right, PD1, PD2 | 8 | - | 60 | - | - | 1 | ⊟1904 784 |
| | Left, PD1, PD2 | 8 | - | 60 | - | - | 1 | ⊟1904 785 |
| | Right, PD3, PD4 | 8 | - | 60 | - | - | 1 | ⊟1904 782 |
| | Left, PD3, PD4 | 8 | - | 60 | - | - | 1 | ⊟1904 783 |
| | Grille to Lower Moulding | 8 | - | - | 60 | - | 1 | 1903 891 |
| | Grille Frame to Dust Shield, PC1, PC2, PC3 | 8 | - | - | - | 60 | 3 | 1903 222 |
| | Grille to Frame, Inner, PC3 | 8 | - | - | - | 60 | 2 | ⊟1904 684 |
| | Grille to Frame, Outer, PC3 | 8 | - | - | - | 60 | 2 | ⊟1904 686 |
| | Grille to Dust Shield, Center, PY1 | 8 | - | - | - | 60 | 1 | 1863 016 |
| | Intermediate, PY1 | 8 | - | - | - | 60 | 2 | 1863 020 |
| | Outer, PY1 | 8 | - | - | - | 60 | 2 | 1863 058 |
| 7-16-27 | SUPPORT, Radiator Grille to Frame, Right, PC3-300 | 8 | - | - | - | 60 | 1 | ⊟1904 748 |
| | Left, PC3-300 | 8 | - | - | - | 60 | 1 | ⊟1904 749 |
| 7-16-29 | SUPPORT, Center Grille Right, PD1, PD2 | 8 | - | 60 | - | - | 1 | 1903 112 |
| | Left, PD1, PD2 | 8 | - | 60 | - | - | 1 | 1903 113 |
| | Right, PD3, PD4 | 6-8 | - | 60 | - | - | 1 | 1903 660 |
| | Left, PD3, PD4 | 6-8 | - | 60 | - | - | 1 | 1903 661 |
| 7-16-36 | PACKAGE, Moulding, PD3, PD4 | 6-8 | - | 60 | - | - | 2 | *2196 457 |
| | Right, Upper, PD1, PD2 | 8 | - | 60 | - | - | 1 | 2196 450 |
| | Left, Upper, PD1, PD2 | 8 | - | 60 | - | - | 1 | 2196 451 |
| | Lower, Center, PD1, PD2 | 8 | - | 60 | - | - | 1 | 2196 456 |
| | Right, Lower, Outer, PD1, PD2 | 8 | - | 60 | - | - | 1 | 2196 454 |
| | Left, Lower, Outer, PD1, PD2 | 8 | - | 60 | - | - | 1 | 2196 455 |
| | Right, Upper | 8 | - | - | 60 | - | 1 | 2196 521 |
| | Left, Upper | 8 | - | - | 60 | - | 1 | 2196 522 |
| | Right, Intermediate | 8 | - | - | 60 | - | 1 | 2196 546 |
| | Left, Intermediate | 8 | - | - | 60 | - | 1 | 2196 547 |
| | Right, Lower | 8 | - | - | 60 | - | 1 | 2196 544 |
| | Left, Lower | 8 | - | - | 60 | - | 1 | 2196 545 |
| | Frame, Grille, PC1, PC2 | 8 | - | - | - | 60 | 1 | 1863 789 |
| | PC3 | 8 | - | - | - | 60 (1) | 1 | *1863 785 |
| | PC3-300 | 8 | - | - | - | 60 | 1 | 1903 235 |
| 7-16-37 | CLIP, Moulding, PD3, PD4 | 6-8 | - | 60 | - | - | 6 | 6010 222 |
| | PD1, PD2 | 8 | - | 60 | - | - | 4 | 6010 229 |
| 7-16-47 | BAR, Cross, Right, PD1, PD2 | 8 | - | 60 | - | - | 1 | 1903 787 |
| | Left, PD1, PD2 | 8 | - | 60 | - | - | 1 | 1903 895 |
| | Bar, Cross, PC1, PC2, PC3 | 8 | - | - | 60 | 60 | 1 | 1863 780 |
| | Bar, Grille, Vertical, Center | 8 | - | - | 60 | - | 1 | 2196 523 |
| | Right, Intermediate | 8 | - | - | 60 | - | 1 | 1903 704 |
| | Left, Intermediate | 8 | - | - | 60 | - | 1 | 1903 705 |
| | Right, Outer | 8 | - | - | 60 | - | 1 | 1903 706 |
| | Left, Outer | 8 | - | - | 60 | - | 1 | 1903 707 |
| | Right, Horizontal, PC3-300 | 8 | - | - | - | 60 | 1 | 2196 570 |
| | Left, Horizontal, PC3-300 | 8 | - | - | - | 60 | 1 | 2196 571 |
| | Center, PC3-300 | 8 | - | - | - | 60 | 1 | 2196 569 |
| | NUT, Clinch, PD1, PD2 | 8 | - | 60 | - | - | ★ | 327 072 |
| 7-16-54 | WASHER, Grille Frame to Grille Bar Cup, PC3-300 | 8 | - | - | - | 60 | 2 | ⊟6022 066 |
| 7-16-58 | RETAINER, Vertical Bar | 8 | - | - | 60 | - | 10 | ⊟6000 869 |
| 7-16-61 | PACKAGE, Name Letter, "D" | 8 | - | - | 60 | - | 1 | 2196 516 |
| | "E" | 8 | - | - | 60 | - | 1 | 2196 517 |
| | "S" | 8 | - | - | 60 | - | 1 | 2196 518 |
| | "O" | 8 | - | - | 60 | - | 2 | 2196 519 |
| | "T" | 8 | - | - | 60 | - | 1 | 2196 520 |
| | PLATE, Name, PY1 | 8 | - | - | - | 60 | 1 | ⊟2196 742 |

NOTE 1: PC3 UP TO Serial No. 8303-102319 also specify 2 each of 1904 684 and 1904 686 Bracket.



MyMopar.com

| CODE | PART NAME AND DESCRIPTION | NO. OF CYL. | PLYMOUTH | DODGE | DESOTO | CHRYSLER AND IMPERIAL | PER CAR | PART NUMBER |
|---|---|---|---|---|---|---|---|---|
| **7-16-0** | **RADIATOR GRILLE - Cont'd** | | | | | | | |
| 7-16-62 | CLIP, Name Plate, PY1 | 8 | - | - | - | 60 | 4 | 6010 203 |
| | NUT, Medallion or Ornament Attaching, PC1, PC2, PC3 | 8 | - | - | - | 60 | ★ | 6013 007 |
| 7-16-63 | PANEL, Upper | 6-8 | - | 60 | - | - | 1 | 1903 394 |
| | Center, Lower, PD1, PD2 | 8 | - | 60 | - | - | 1 | 1903 540 |
| | Right, Lower, PD1, PD2 | 8 | - | 60 | - | - | 1 | 1903 646 |
| | Left, Lower, PD1, PD2 | 8 | - | 60 | - | - | 1 | 1903 647 |
| 7-16-79 | WASHER, Ornament, PC1, PC2, PC3 | 8 | - | - | - | 60 | 4 | 1903 064 |
| 7-16-84 | BASE, Name Plate, PY1 | 8 | - | - | - | 60 | 1 | 1903 261 |
| **7-17-0** | **RADIATOR MEDALLION** | | | | | | | |
| 7-17-1 | MEDALLION PACKAGE | 6-8 | 60 | - | - | - | 1 | 2196 149 |
| | Medallion, PD1, PD2 | 8 | - | 60 | - | - | 1 | 1903 536 |
| | Ornament, Medallion, PD1, PD2 | 8 | - | 60 | - | - | 1 | 2196 453 |
| | Medallion, w/BASE, PC1, PC2, PC3 | 8 | - | - | - | 60 | 1 | 2196 573 |
| | Ornament, Medallion, PC1, PC2, PC3 | 8 | - | - | - | 60 | 1 | 2196 572 |
| 7-17-2 | PACKAGE, Medallion Base | 6-8 | 60 | - | - | - | 1 | 1903 538 |
| | PD1, PD2 | 8 | - | 60 | - | - | 1 | 2196 452 |
| 7-17-11 | NUT, Medallion to Base, PD1, PD2 | 8 | - | 60 | - | - | 3 | 6010 226 |
| | PC1, PC2, PC3 | 8 | - | - | - | 60 | 2 | 6006 425 |
| | Ornament, PC1, PC2, PC3 | 8 | - | - | - | 60 | 4 | 6000 252 |
| **7-26-0** | **RADIATOR YOKE** | | | | | | | |
| 7-26-2 | YOKE | 6-8 | 60 | - | - | - | 1 | 1863 847 |
| | PC1 | 6-8 | - | 60 | 60 | 60 | 1 | 1903 281 |
| | PC2, PC3, PY1 | 8 | - | - | - | 60 | 1 | 1863 774 |
| 7-26-3 | BRACE, to Dust Shield Right | 6-8 | 60 | - | - | - | 1 | 1902 964 |
| | Left | 6-8 | 60 | - | - | - | 1 | 1902 965 |
| 7-26-5 | STUD, To Frame | 6-8 | 60 | - | 60 | 60 | ★ | 1863 760 |
| | SCREW, to Frame | 6-8 | - | 60 | - | - | 2 | 1863 815 |
| | To Side Shield, Lower | 6-8 | 60 | 60 | 60 | 60 | 2 | 1902 716 |
| 7-26-8 | WASHER, Radiator Yoke to Frame | 6-8 | 60 | 60 | 60 | 60 | 2 | 1239 880 |
| 7-26-9 | SEAL, Air Shield to Hood PC2, PC3, PY1 | 8 | - | - | - | 60 | ★ | 1242 974 |
| 7-26-15 | SHIELD, Radiator Air | 6-8 | 60 | - | - | - | 1 | 1902 958 |
| | Yoke to Core, w/Air Conditioning PP2, PD4 | 8 | 60 | 60 | - | - | 1 | 1903 941 |
| | PC2, PC3, PY1 | 8 | - | - | - | 60 | 1 | 1903 457 |
| | w/SEAL, PC2, PC3 | 8 | - | - | - | 60 | 1 | 1863 062 |
| | PY1 | 8 | - | - | - | 60 | 1 | 1903 676 |
| 7-26-17 | CLIP, Air Shield, PC2, PC3, PY1 | 8 | - | - | - | 60 | ★ | 6010 060 |
| 7-26-18 | SHIM to Frame, Thin | 6-8 | 60 | 60 | 60 | 60 | ★ | 1902 763 |
| 7-26-24 | BRACE, Air Shield Center | 6-8 | 60 | - | - | - | 1 | 1902 862 |
| **7-31-0** | **RADIATOR SHIELD** | | | | | | | |
| 7-31-7 | NUT, Clinch | 6-8 | 60 | 60 | - | - | ★ | 327 072 |
| 7-31-10 | SHIELD, Dust | 6-8 | 60 | - | - | - | 1 | 1863 881 |
| | | 6-8 | - | 60 | - | - | 1 | 1863 937 |
| | | 8 | - | - | 60 | - | 1 | 1903 857 |
| | PC1 | 8 | - | - | - | 60 | 1 | 1903 409 |
| | PC2, PC3 | 8 | - | - | - | 60 | 1 | 1903 406 |
| | PY1 | 8 | - | - | - | 60 | 1 | 1863 553 |
| 7-31-15 | SCREW, Dust Shield to Frame Bracket | 6-8 | - | 60 | - | - | 4 | 6022 085 |
| 7-31-23 | BRACKET, Dust Shield to Frame | 6-8 | - | 60 | - | - | 2 | 1902 799 |
| | Dust Shield to Lock Support | 8 | - | - | 60 | - | 1 | 1903 733 |
| 7-31-45 | SHIM, Side Shield to Yoke | 6-8 | 60 | 60 | 60 | 60 | ★ | 1903 036 |
| **7-33-0** | **RADIATOR UPPER CROSS BAR** | | | | | | | |
| 7-33-1 | BAR, Radiator Cross | 6-8 | 60 | - | - | - | 1 | 1863 275 |
| | PC1, PC2, PC3 | 8 | - | - | 60 | 60 | 1 | *1863 780 |
| 7-33-4 | SUPPORT, Cross Bar to Air Shield | 6-8 | 60 | - | - | - | 1 | 1902 970 |



MyMopar.com

| CODE | PART NAME AND DESCRIPTION | NO. OF CYL. | PLYMOUTH | DODGE | DESOTO | CHRYSLER AND IMPERIAL | PER CAR | PART NUMBER |
|---|---|---|---|---|---|---|---|---|
| **7-35-0** | **RADIATOR STONE DEFLECTOR** | | | | | | | |
| 7-35-2 | DEFLECTOR | 6-8 | 60 | - | - | - | 1 | 1863 884 |
| 7-35-12 | SCREW, to Fender Extension | 6-8 | 60 | - | - | - | 4 | ⊟6022 032 |
| 7-35-20 | PACKAGE, Radiator Stone Deflector Moulding | 6-8 | 60 | - | - | - | 1 | 2196 251 |
| 7-35-21 | CLIP, Stone Deflector Moulding | 6-8 | 60 | - | - | - | 8 | *6010 228 |
| **7-41-0** | **THERMOSTAT** | | | | | | | |
| 7-41-4 | THERMOSTAT, 180° F. | 6 | 60 | 60 | - | - | 1 | 2129 205 |
| | 160° F. | 6 | 60 | 60 | - | - | 1 | 2129 206 |
| | 160° F. | 8 | 60 | 60 | 60 | 60 | 1 | 1734 957 |
| | 180° F. | 8 | 60 | 60 | 60 | 60 | 1 | 1674 602 |
| **7-42-0** | **WATER PUMP** | | | | | | | |
| 7-42-1 | PACKAGE, Water Pump, PP1, PD3 | 6 | 60 | 60 | - | - | 1 | 2196 910 |
| | PP1, PD3, Taxi | 6 | 60 | 60 | - | - | 1 | 2084 409 |
| | PP2, PD4 | 8 | 60 | 60 | - | - | 1 | 1752 422 |
| | w/o Air Conditioning, PP2, PD4, High Performance, PD1, PD2 | 8 | 60 | 60 | 60 | 60 | 1 | 1879 526 |
| | w/Air Conditioning, PP2, PD4, High Performance, PD1, PD2 | 8 | 60 | 60 | 60 | 60 | 1 | 1879 536 |
| 7-42-4 | PACKAGE, Water Pump Repair, PP2, PD4 | 8 | 60 | 60 | - | - | 1 | 1752 435 |
| | w/o Air Conditioning, PP2, PD4, High Performance, PD1, PD2 | 8 | 60 | 60 | 60 | 60 | 1 | 1843 447 |
| | w/Air Conditioning, PP2, PD4, High Performance, PD1, PD2 | 8 | 60 | 60 | 60 | 60 | 1 | 1752 622 |
| **7-43-0** | **WATER PUMP BODY OR HOUSING** | | | | | | | |
| 7-43-1 | HOUSING, w/o Air Conditioning, PP2, PD4, High Performance, PD1, PD2 | 8 | 60 | 60 | 60 | 60 | 1 | 1944 916 |
| | w/Air Conditioning, PP2, PD4, High Performance, PD1, PD2 | 8 | 60 | 60 | 60 | 60 | 1 | 1859 634 |
| 7-43-5 | SCREW, Water Pump, Short, PP2, PD4 | 8 | 60 | 60 | - | - | 3 | 1672 556 |
| | Medium, PP2, PD4 | 8 | 60 | 60 | - | - | 2 | * 446 641 |
| | Long, PP2, PD4 | 8 | 60 | 60 | - | - | 1 | * 272 429 |
| **7-44-0** | **WATER PUMP GASKET** | | | | | | | |
| 7-44-3 | GASKET, Water Pump Body | 6 | 60 | 60 | - | - | 1 | 1947 521 |
| | PP2, PD4 | 8 | 60 | 60 | - | - | 1 | 1676 031 |
| | PP2, PD4, High Performance, PD1, PD2 | 8 | 60 | 60 | 60 | 60 | 1 | 1737 705 |
| 7-44-4 | GASKET, Intermediate Plate | 6 | 60 | 60 | - | - | 1 | 1947 523 |
| | To Cylinder Block, PP2, PD4, High Performance, PD1, PD2 | 8 | 60 | 60 | 60 | 60 | 2 | 1737 761 |
| **7-45-0** | **WATER PUMP SHAFT AND IMPELLER** | | | | | | | |
| 7-45-2 | SHAFT, w/BEARING | 8 | 60 | 60 | 60 | 60 | 1 | 1634 817 |
| 7-45-31 | IMPELLER, PP1, PD3 | 6 | 60 | 60 | - | - | 1 | 2129 160 |
| | PP1, PD3, Taxi | 6 | 60 | 60 | - | - | 1 | 1947 707 |
| | PP2, PD4 | 8 | 60 | 60 | - | - | 1 | 1635 783 |
| | w/o Air Conditioning, PP2, PD4, High Performance, PD1, PD2 | 8 | 60 | 60 | 60 | 60 | 1 | 1637 724 |
| | w/Air Conditioning, PP2, PD4, High Performance, PD1, PD2 | 8 | 60 | 60 | 60 | 60 | 1 | 1859 151 |
| **7-46-0** | **WATER PUMP SEAL** | | | | | | | |
| 7-46-1 | SEAL | 6 | 60 | 60 | - | - | 1 | 2120 955 |
| | | 8 | 60 | 60 | 60 | 60 | 1 | 1243 631 |
| 7-46-10 | WASHER, Seal Retaining | 6-8 | 60 | 60 | 60 | 60 | 1 | 1674 679 |



MyMopar.com

| CODE | PART NAME AND DESCRIPTION | NO. OF CYL. | PLYMOUTH | DODGE | DESOTO | CHRYSLER AND IMPERIAL | PER CAR | PART NUMBER |
|---|---|---|---|---|---|---|---|---|
| **7-48-0** | **WATER PUMP BY-PASS NIPPLE** | | | | | | | |
| 7-48-22 | NIPPLE, By-Pass | 6 | 60 | 60 | - | - | 1 | 1947 643 |
| | PP2, PD4 | 8 | 60 | 60 | - | - | 2 | 1618 668 |

## NOTES



MyMopar.com

# GROUP 8 - ELECTRICAL

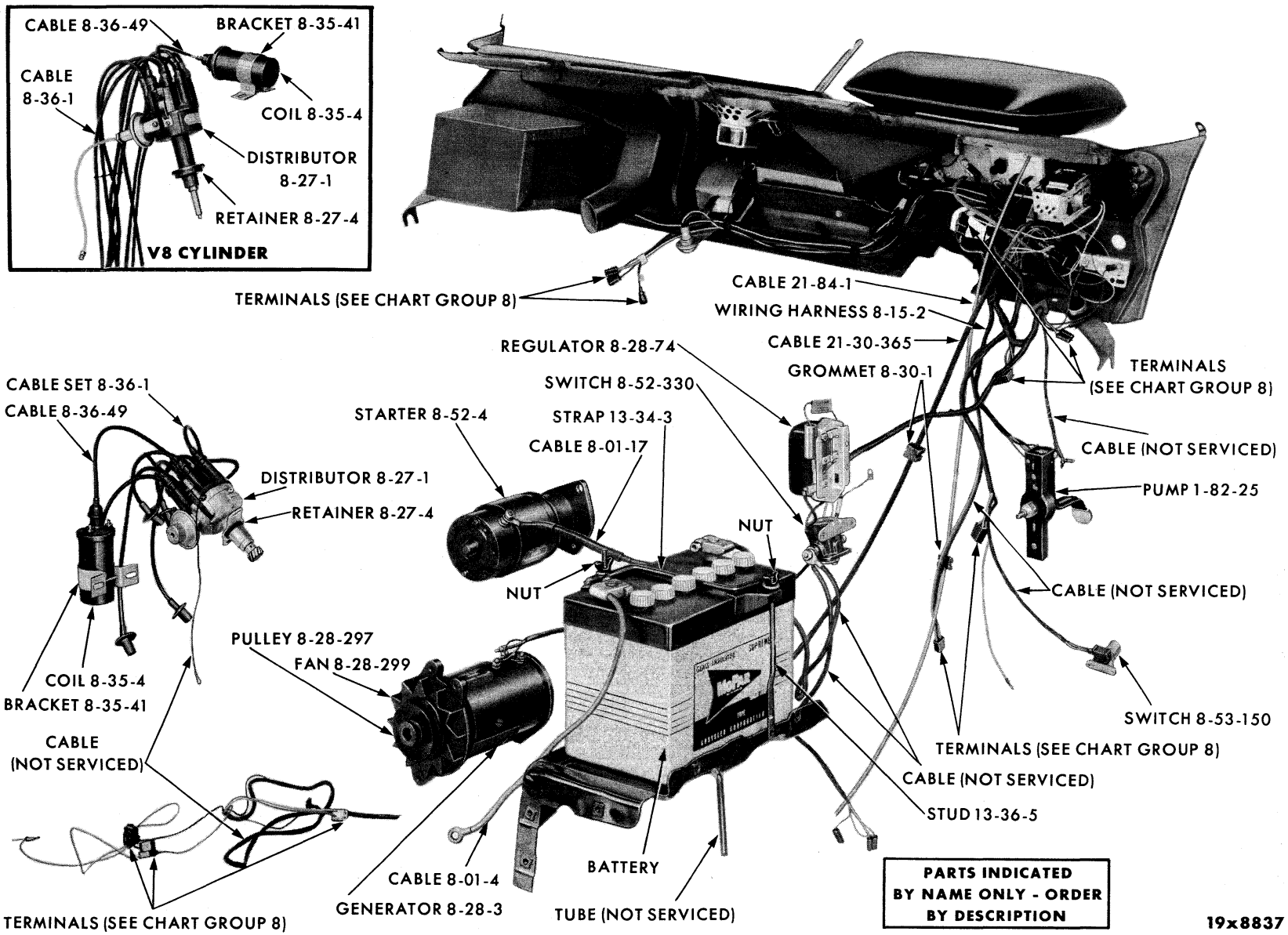




MyMopar.com

Printed in U.S.A.
Page 8-1
April 20, 1960 Supersedes Dec. 30, 1959.

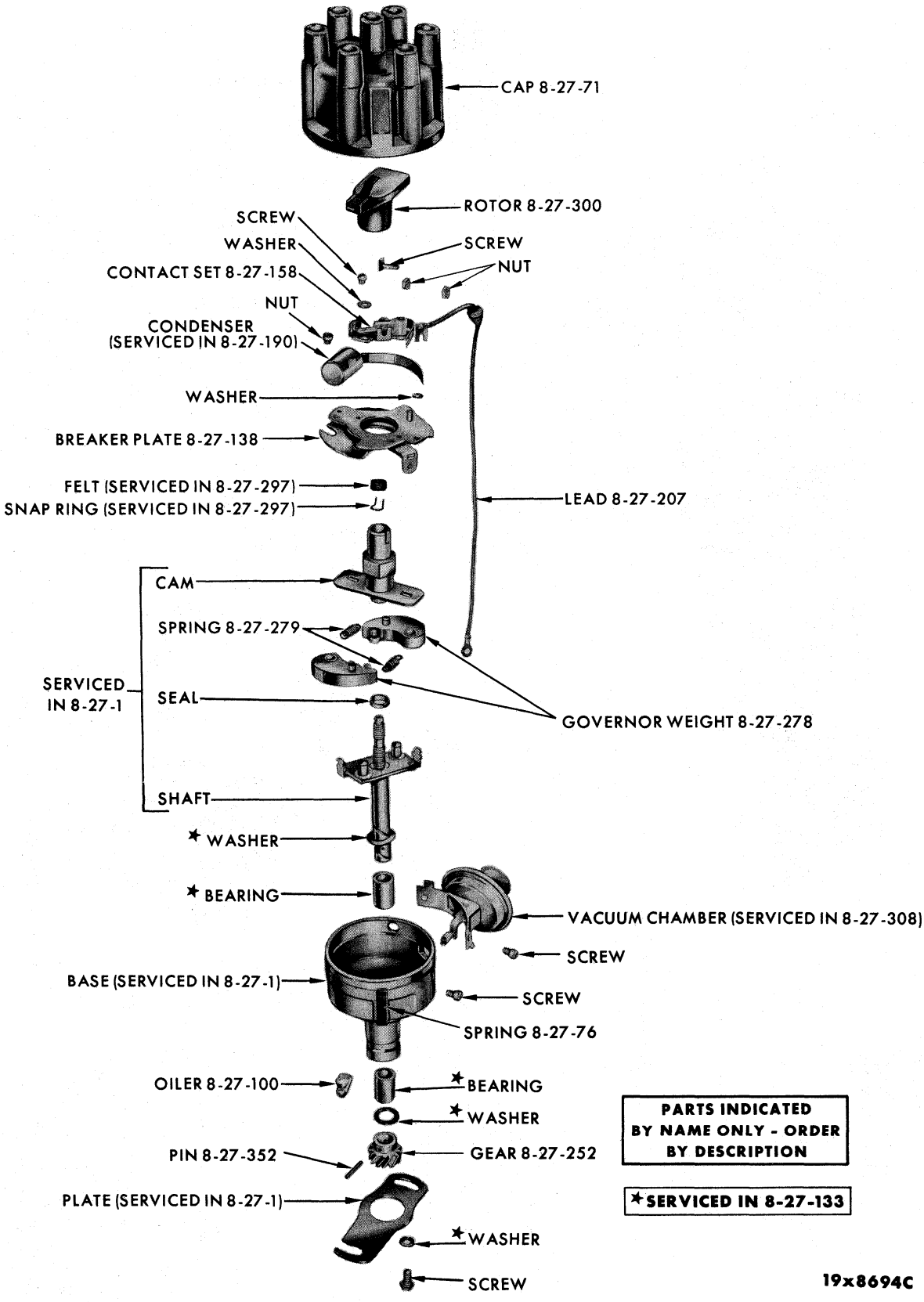


DISTRIBUTOR - 6 CYLINDER



MyMopar.com

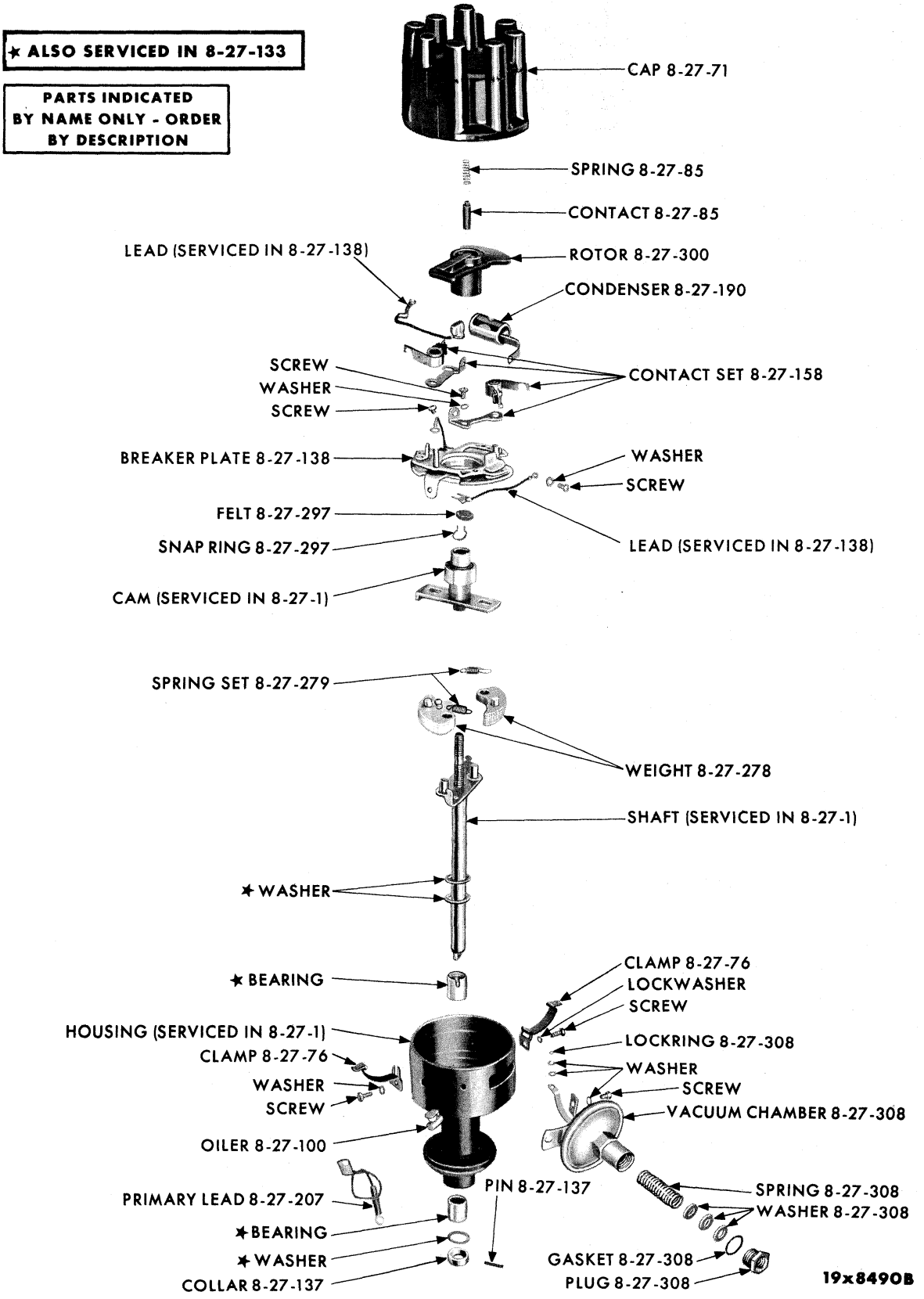


DISTRIBUTOR - V8 CYLINDER



MyMopar.com

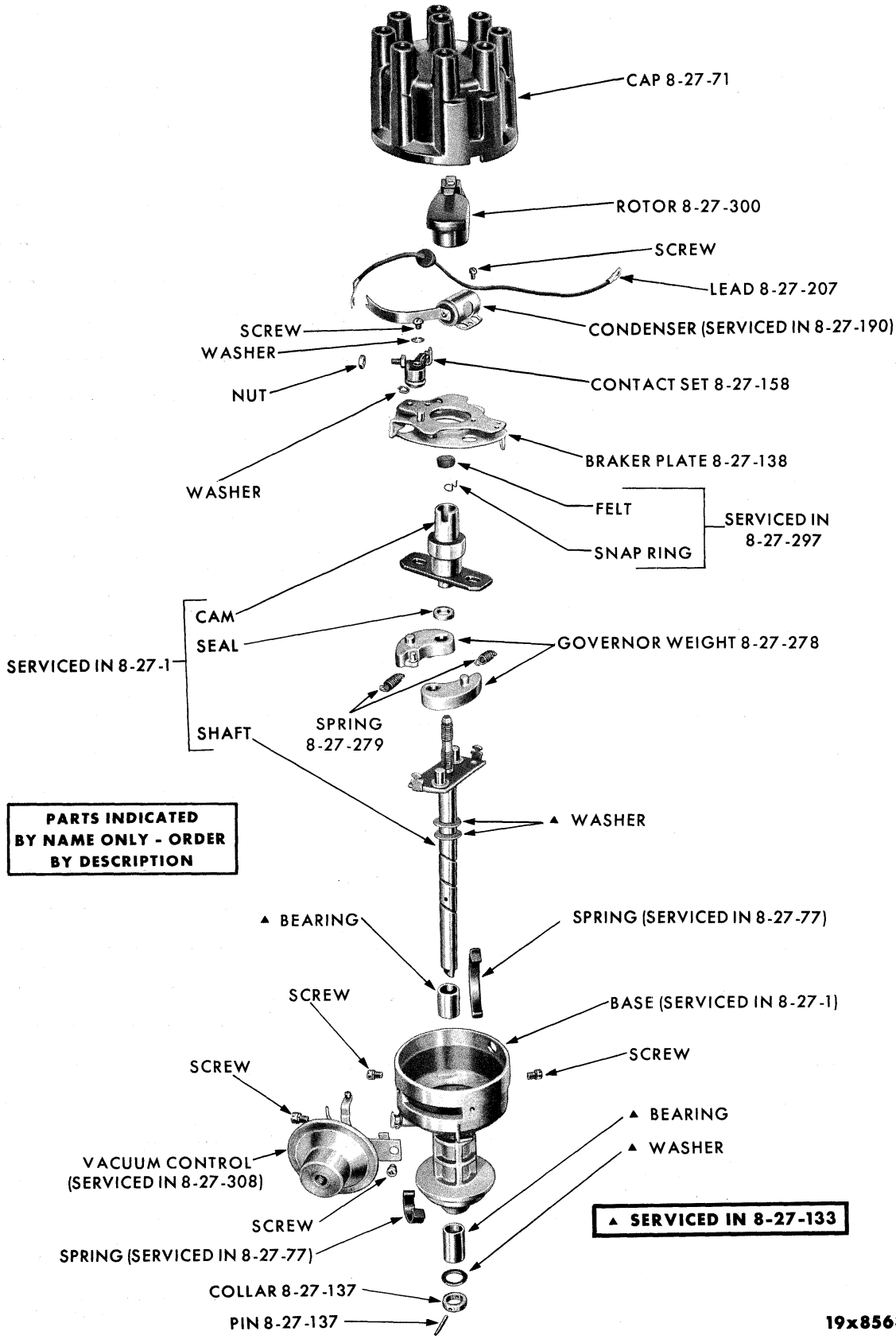


DISTRIBUTOR - V8 CYLINDER (WITH ALUMINUM BASE)



MyMopar.com

| CODE | PART NAME AND DESCRIPTION | NO. OF CYL. | PLYMOUTH | DODGE | DESOTO | CHRYSLER AND IMPERIAL | PER CAR | PART NUMBER |
|---|---|---|---|---|---|---|---|---|

## NOTES


MyMopar.com

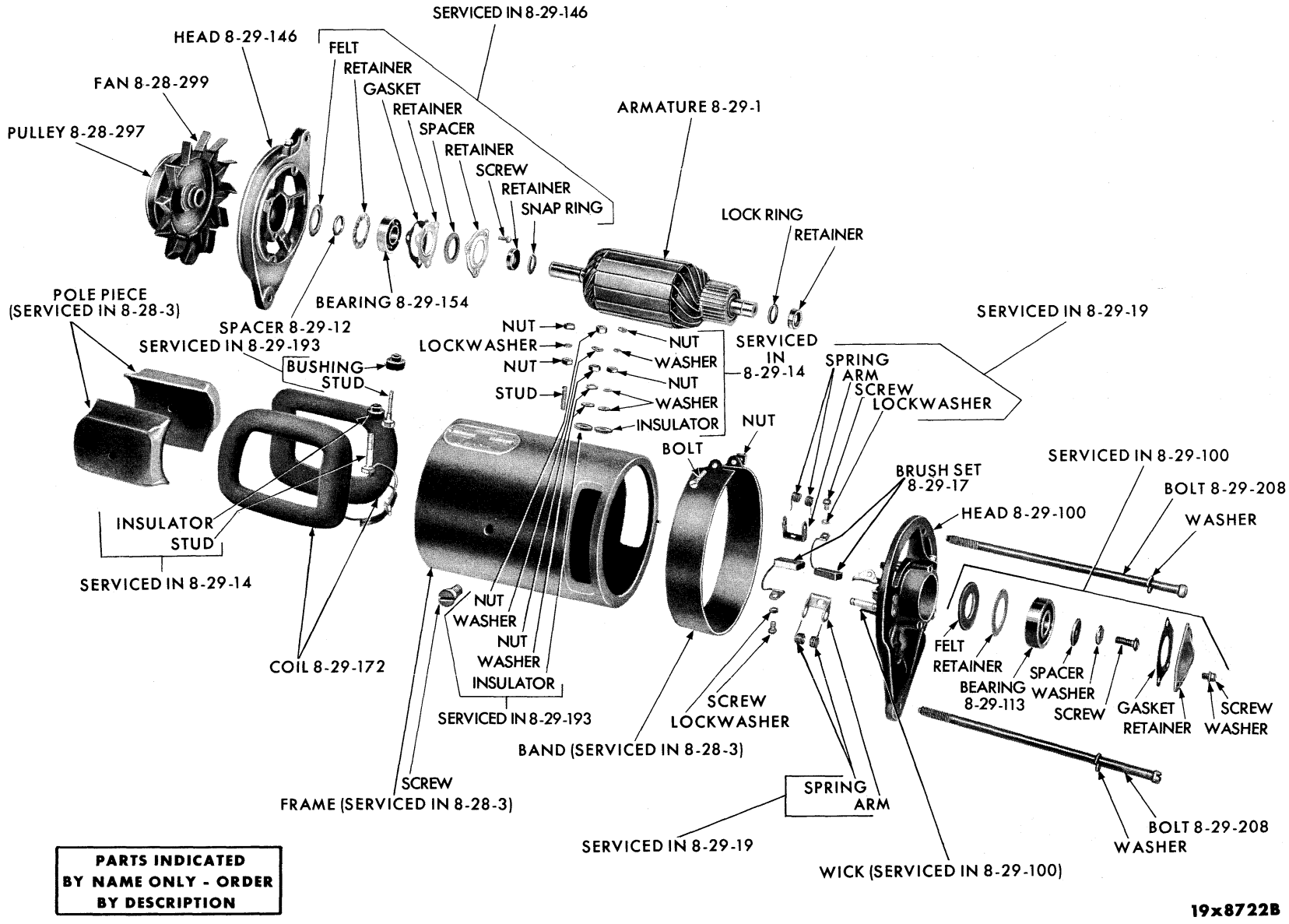


GENERATOR - 30 AND 40 AMPERE

MyMopar.com

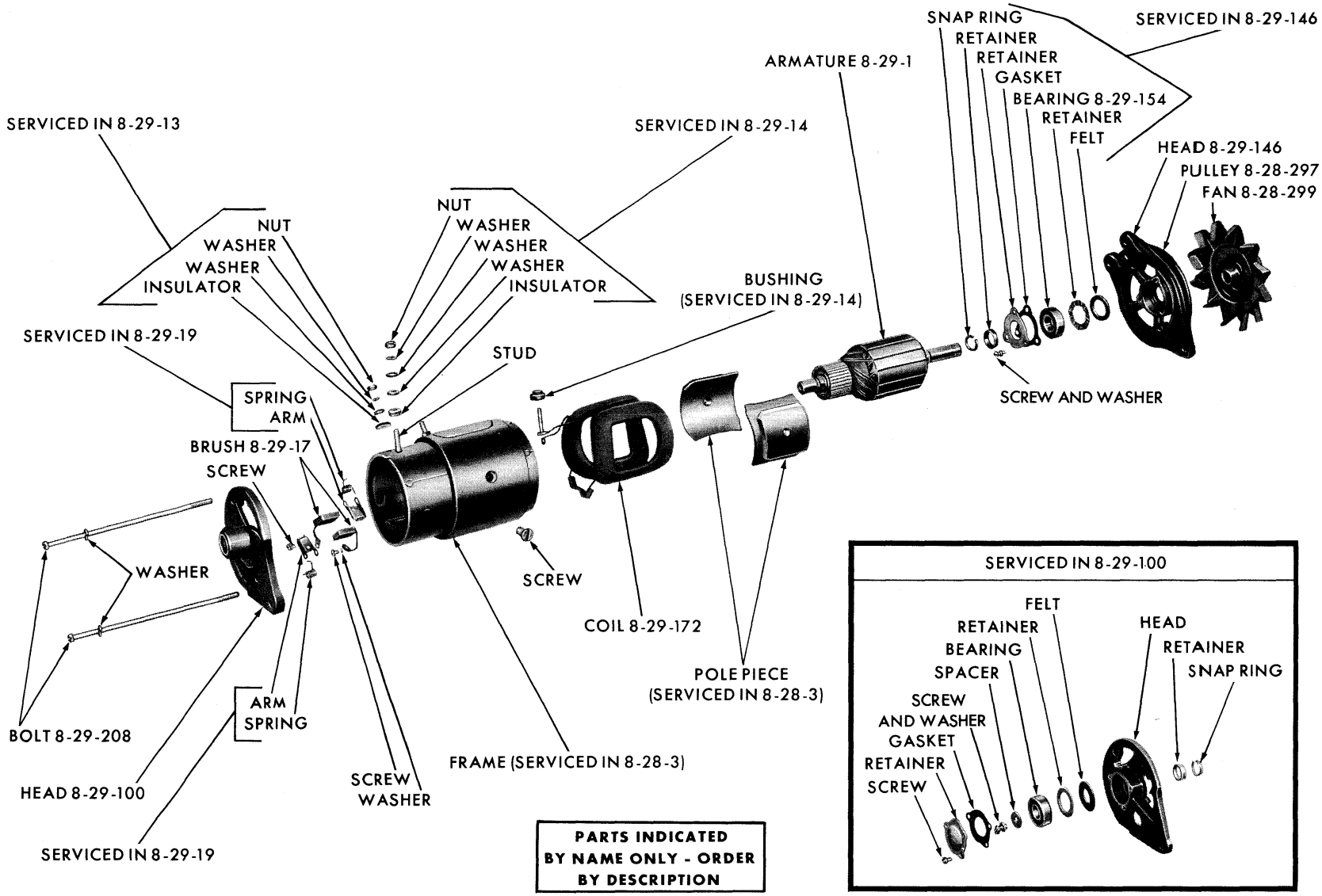


GENERATOR - 35 AMPERE

MyMopar.com

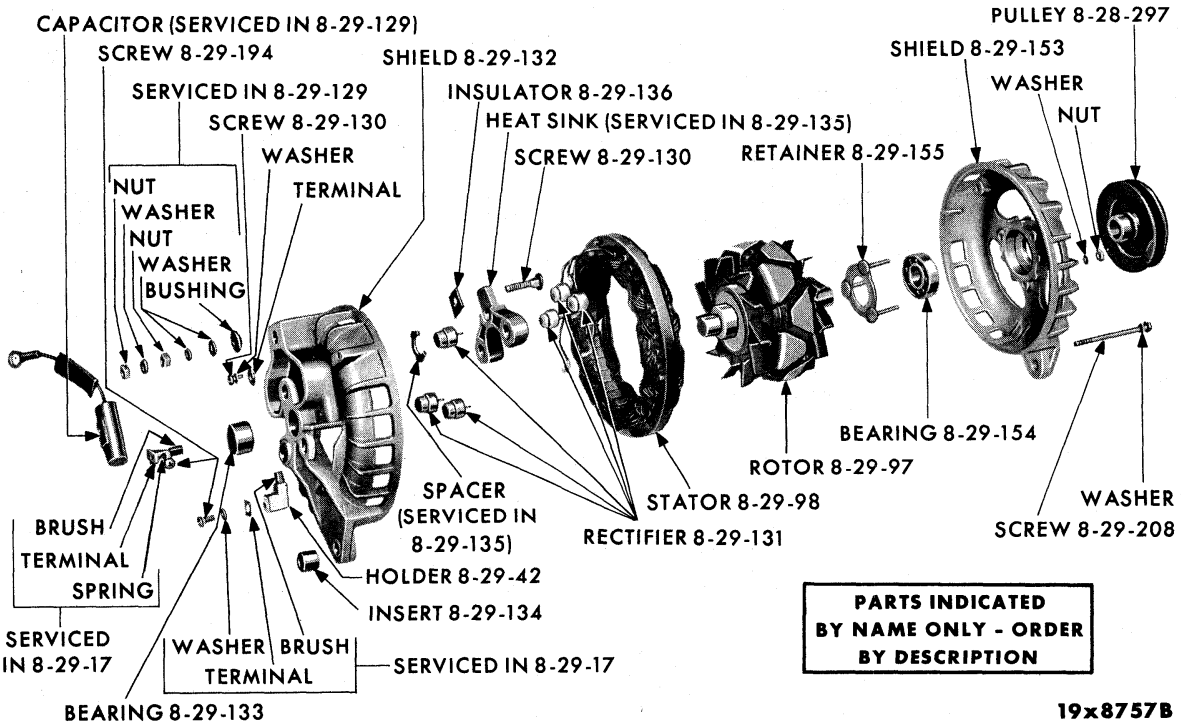


ALTERNATOR

## NOTES



MyMopar.com

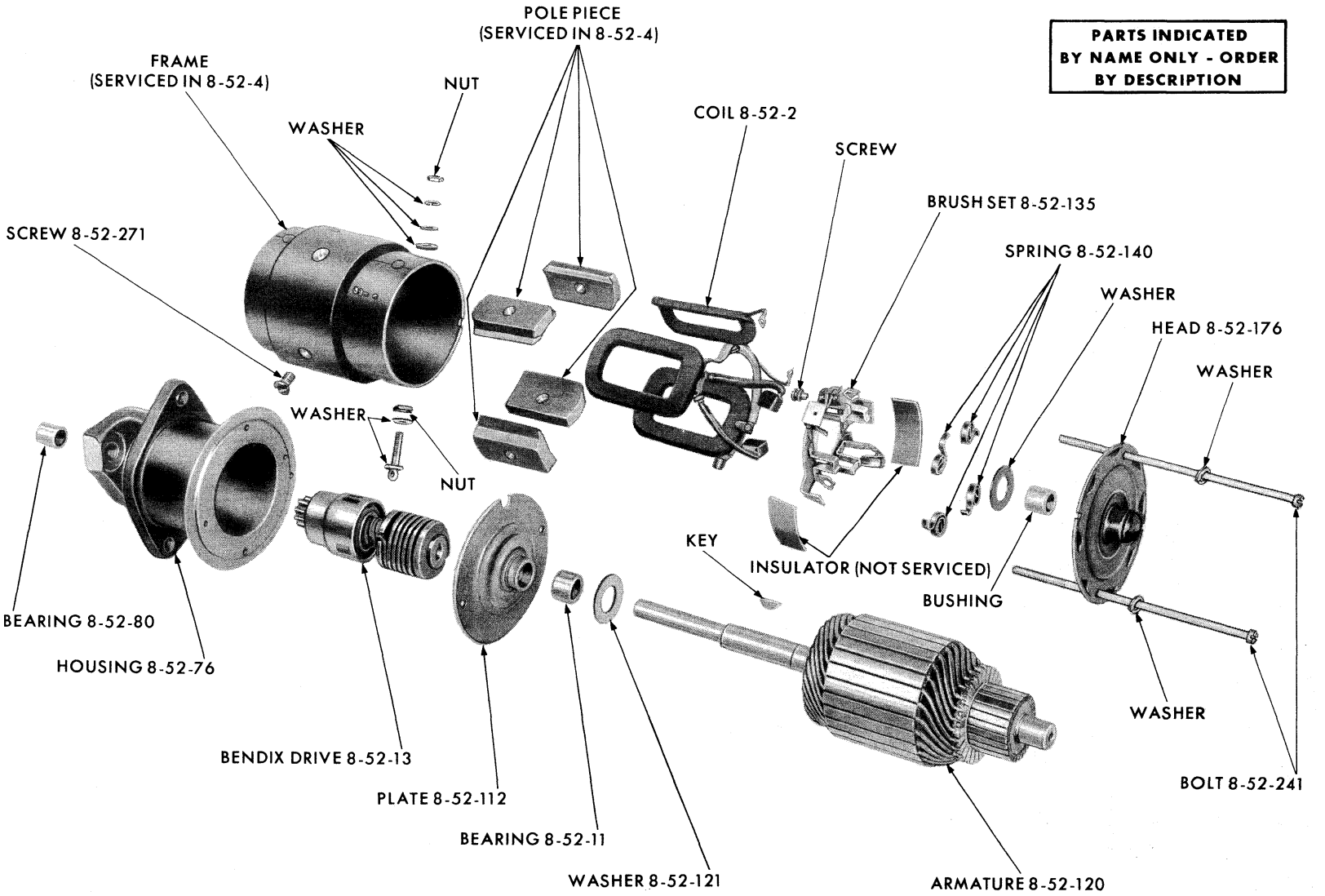


STARTER - PLYMOUTH PP1-2 AND DODGE PD1-2-3-4

MyMopar.com

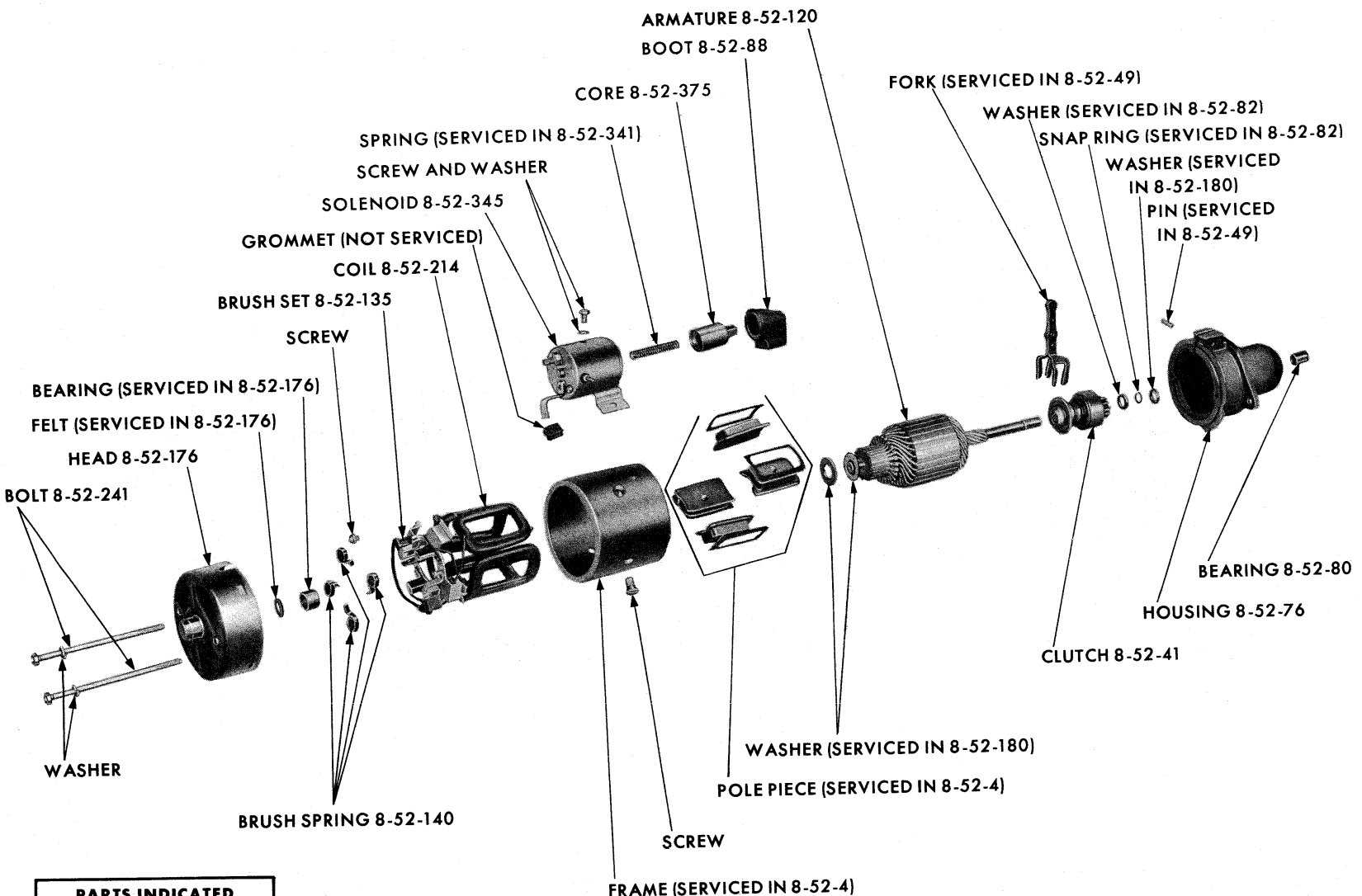


STARTER - DESOTO PS1-3, CHRYSLER PC1-2-3-4 AND IMPERIAL PY1

MyMopar.com

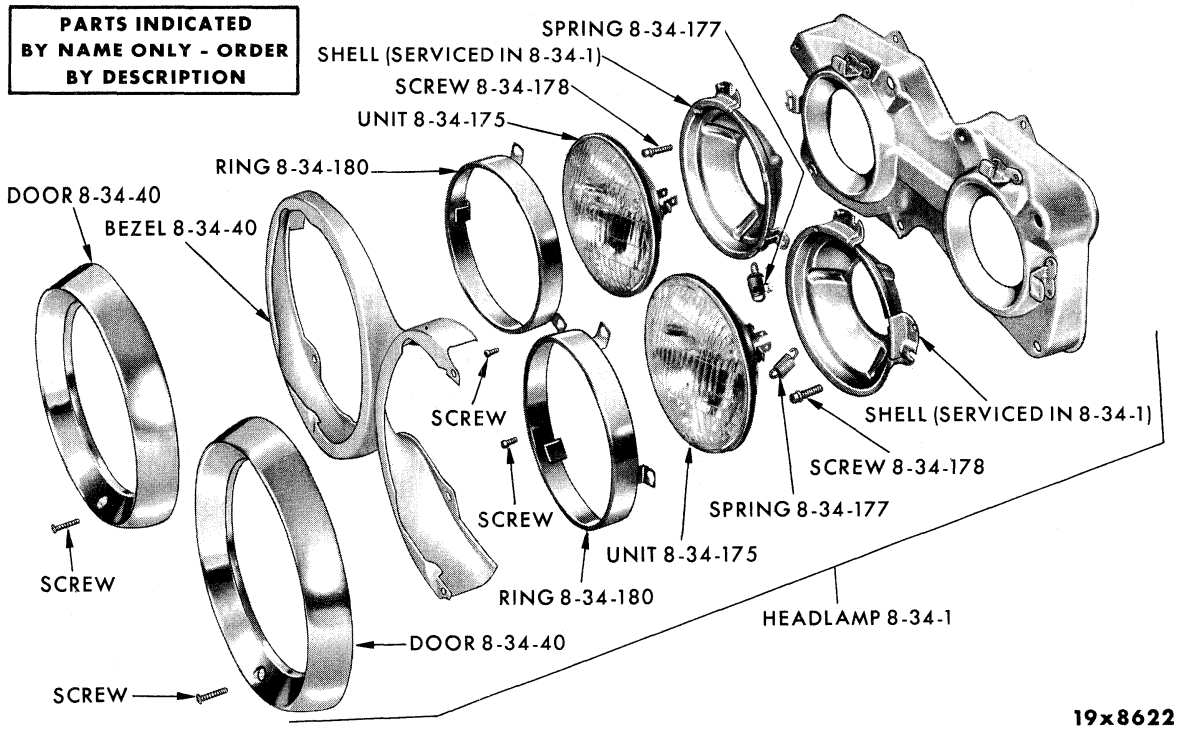


HEADLAMPS - PLYMOUTH PP1-2

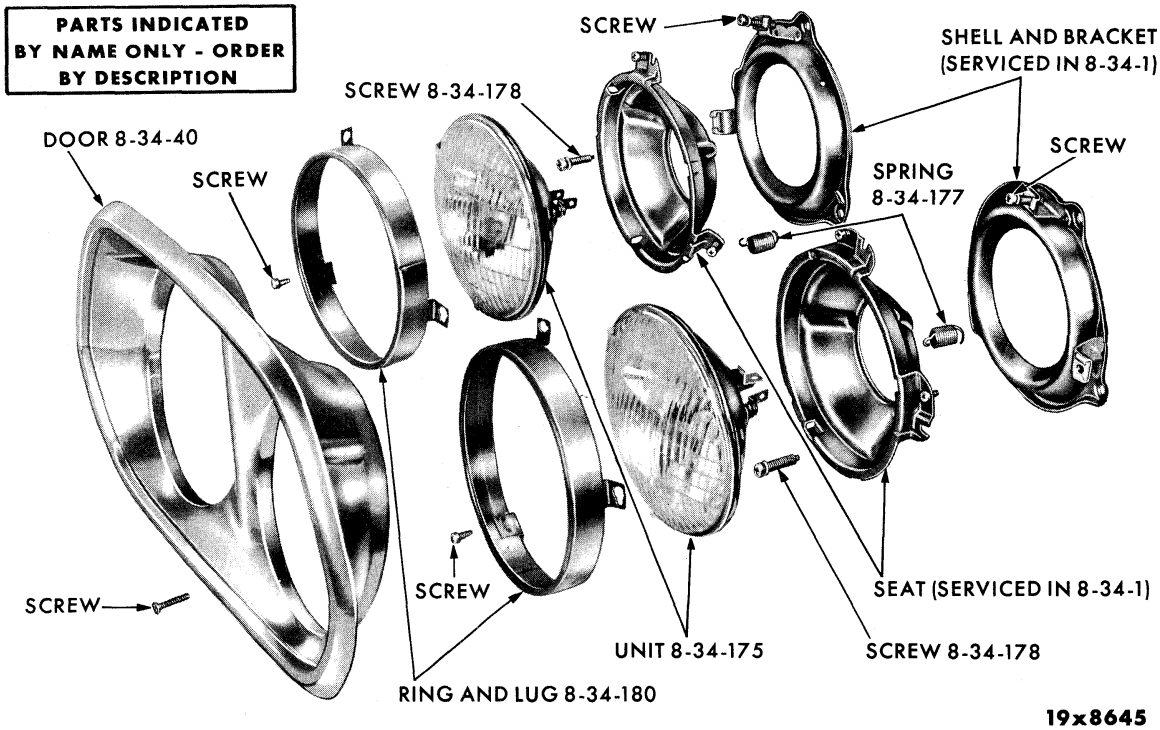


HEADLAMPS - DODGE PD1-2-3-4



MyMopar.com

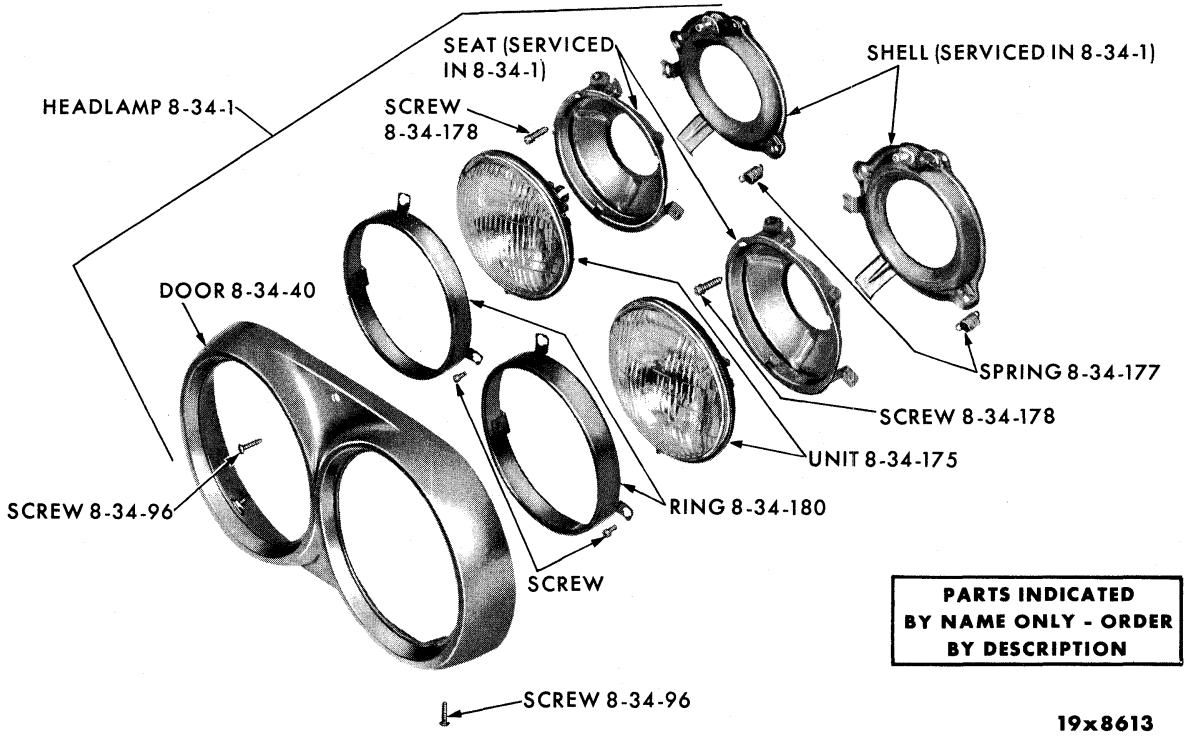


HEADLAMPS - DESOTO PS1-3, CHRYSLER PC1-2-3

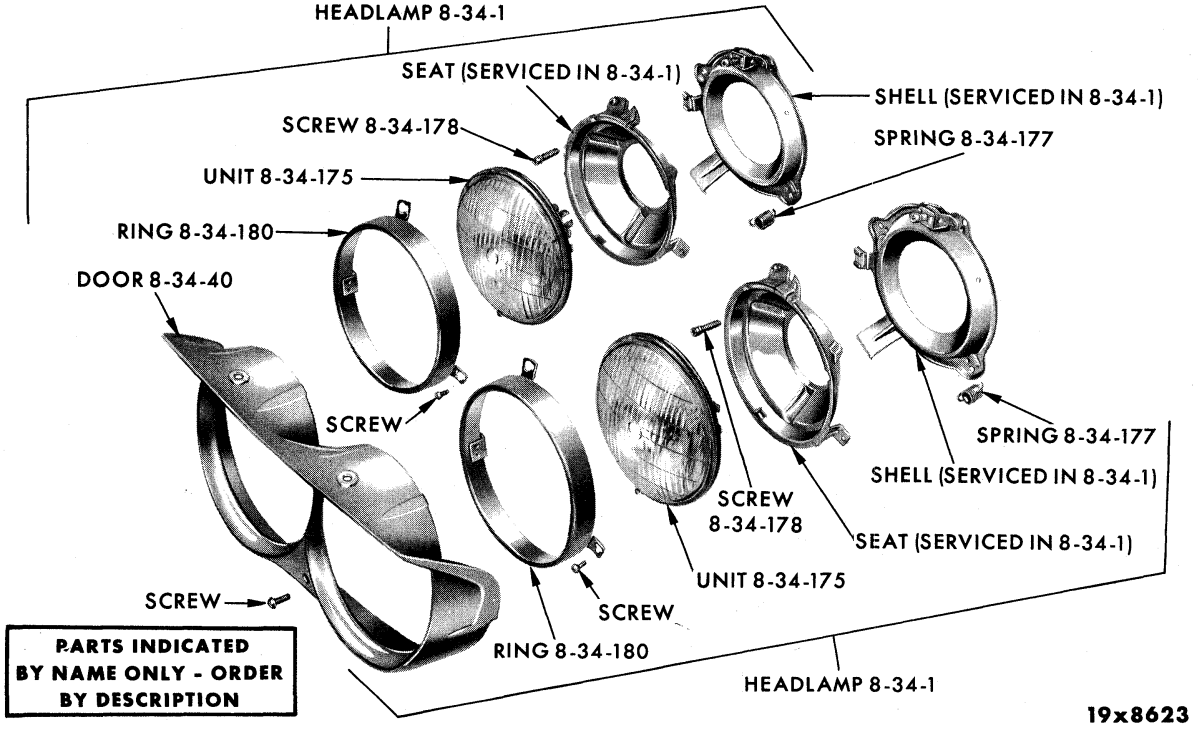


HEADLAMPS - IMPERIAL PY1



MyMopar.com

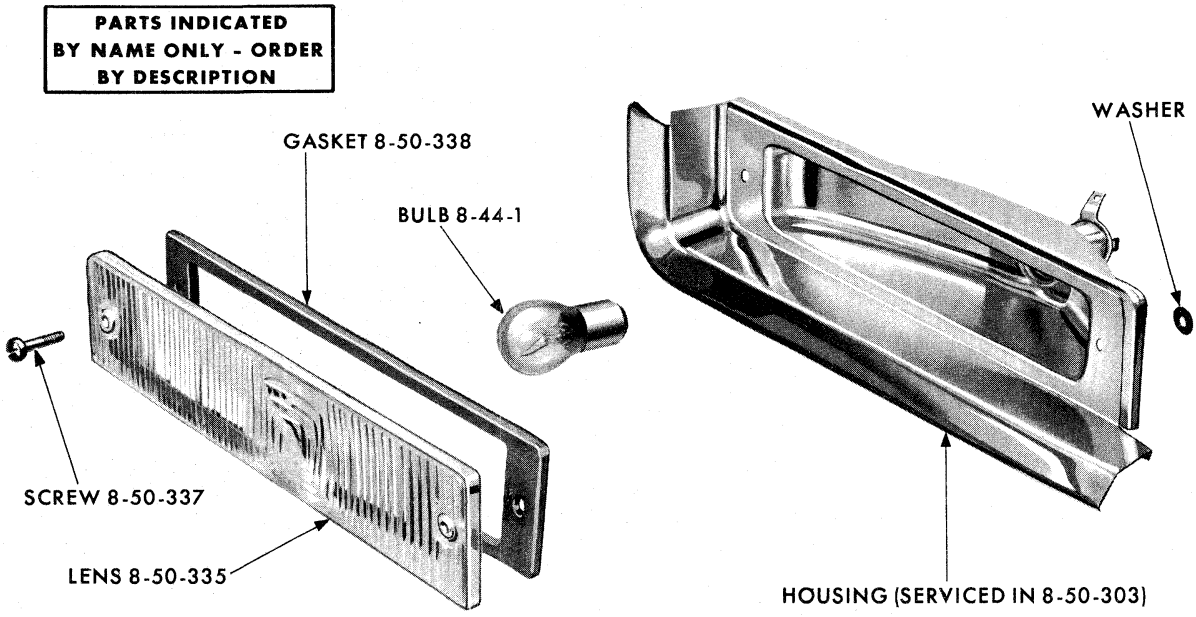


PARKING LAMP - PLYMOUTH PP1-2

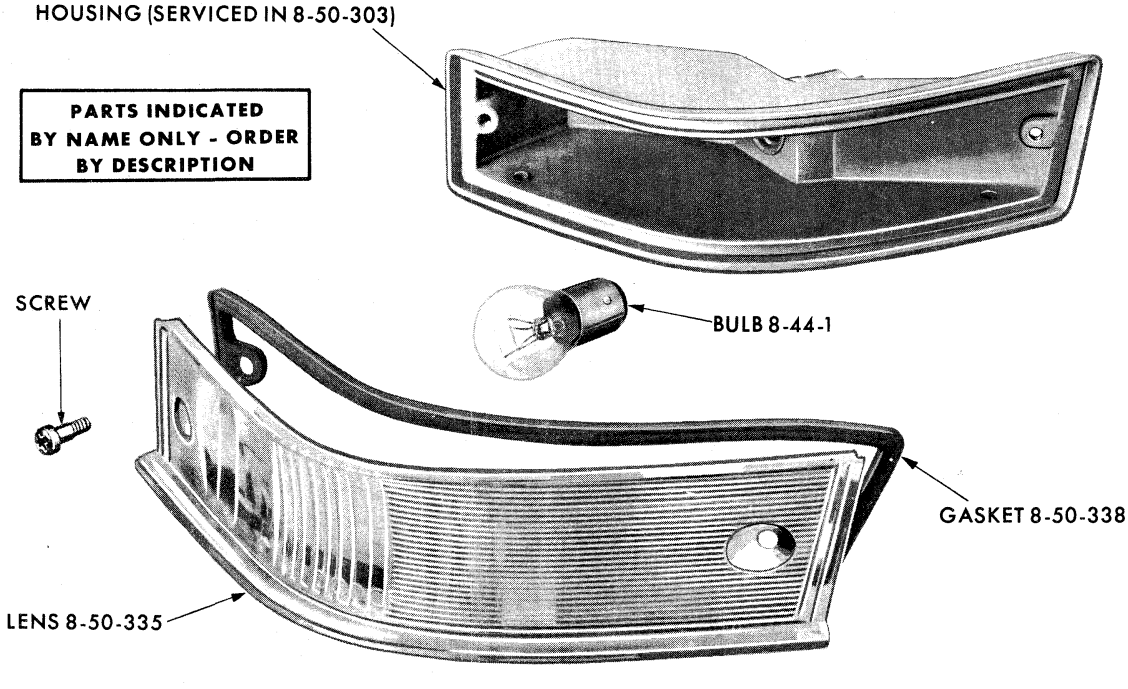


PARKING LAMP - DODGE PD1-2-3-4



MyMopar.com

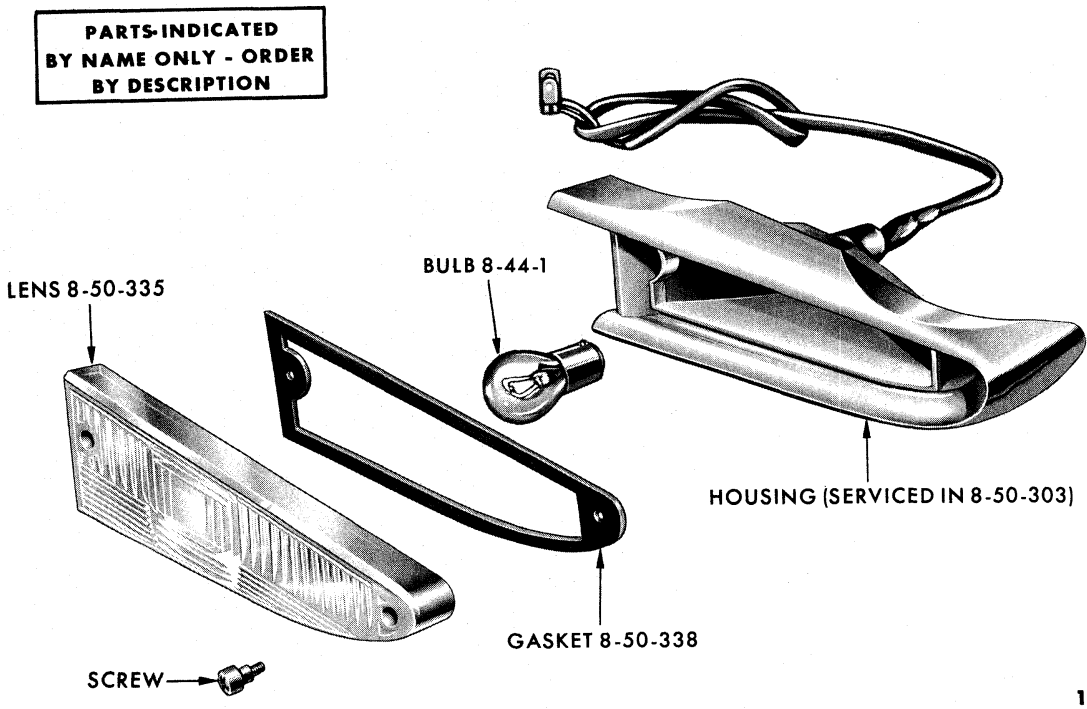


PARKING LAMP - DESOTO PS1-3

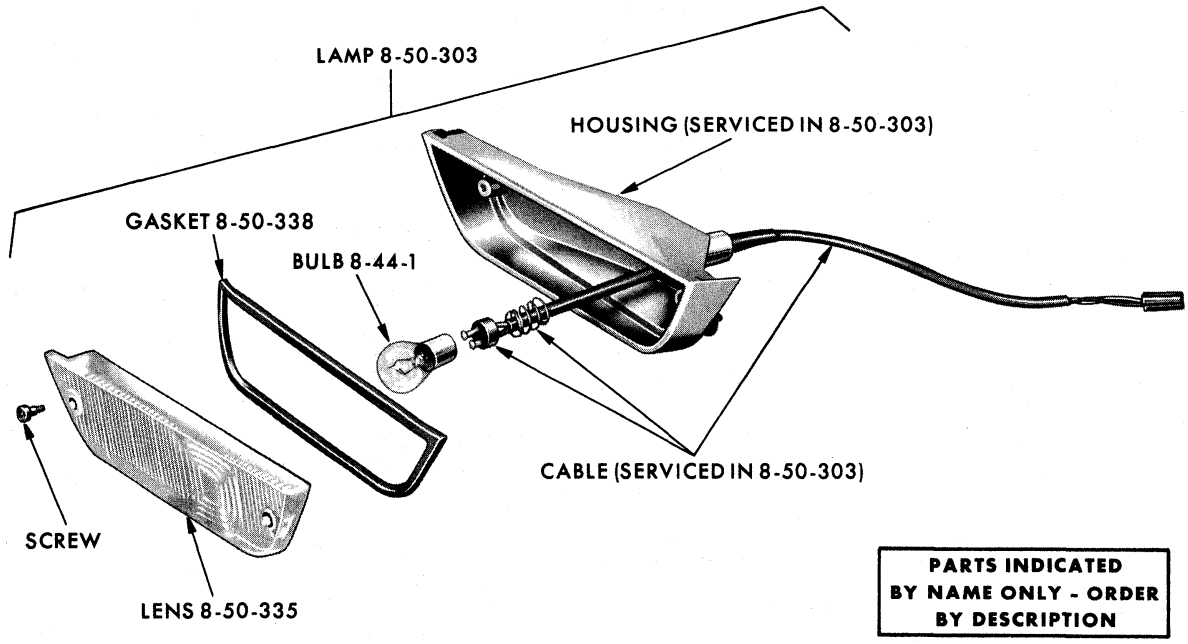


PARKING LAMP - CHRYSLER PC1-2-3



MyMopar.com

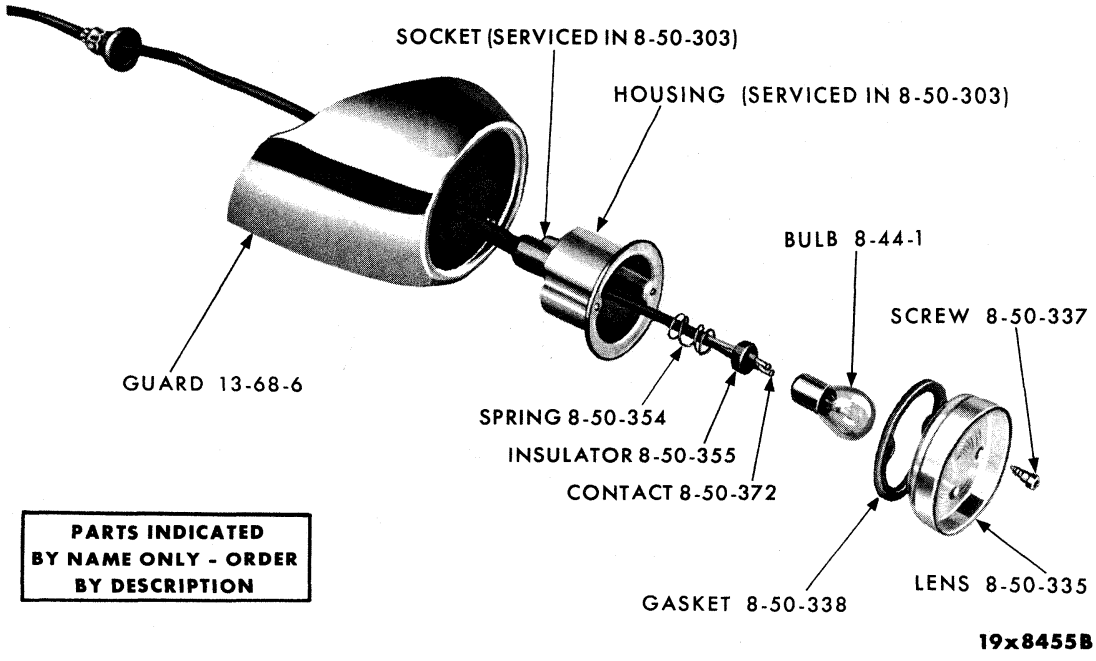


PARKING LAMP - IMPERIAL PY1

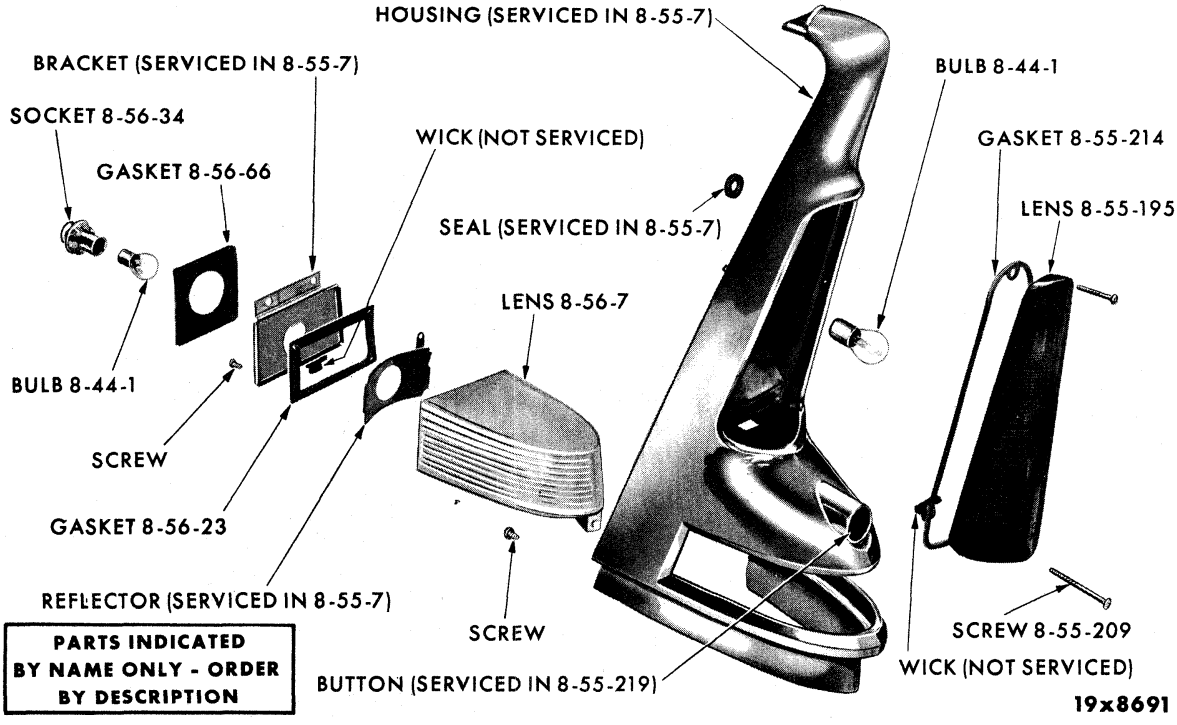


TAIL, STOP AND BACK-UP LAMPS - PLYMOUTH PP1-2 (EXCEPT SUBURBAN)



MyMopar.com

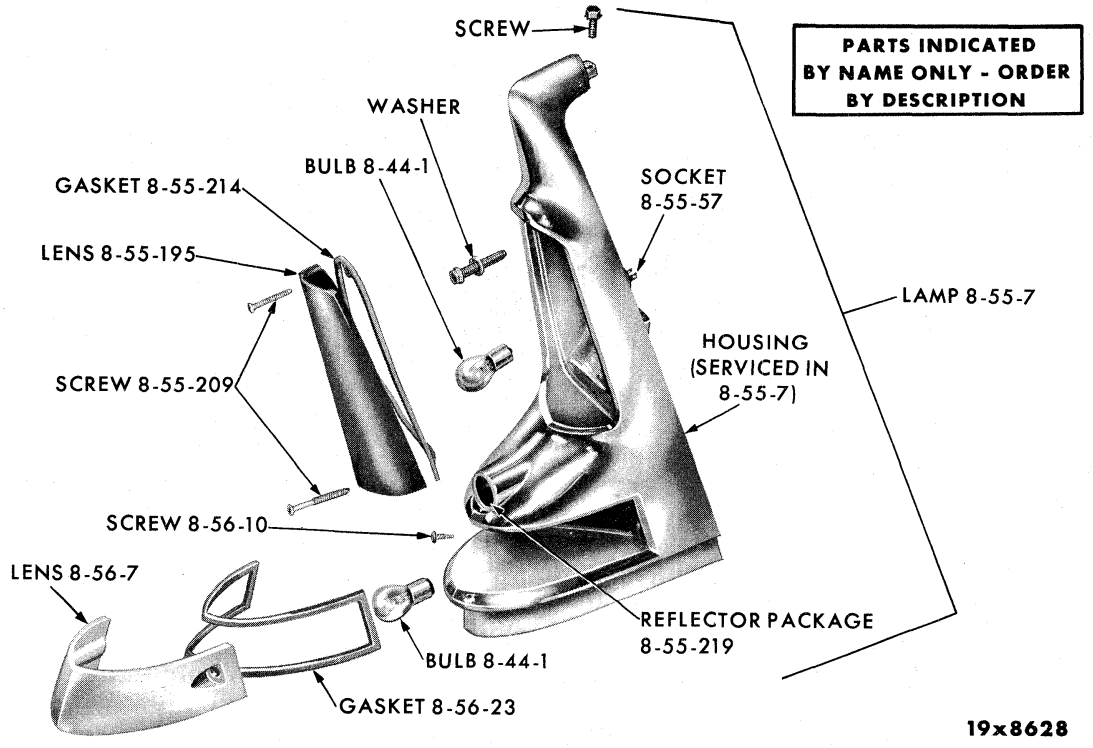


TAIL, STOP AND BACK-UP LAMPS - PLYMOUTH PP1-2 (SUBURBAN)

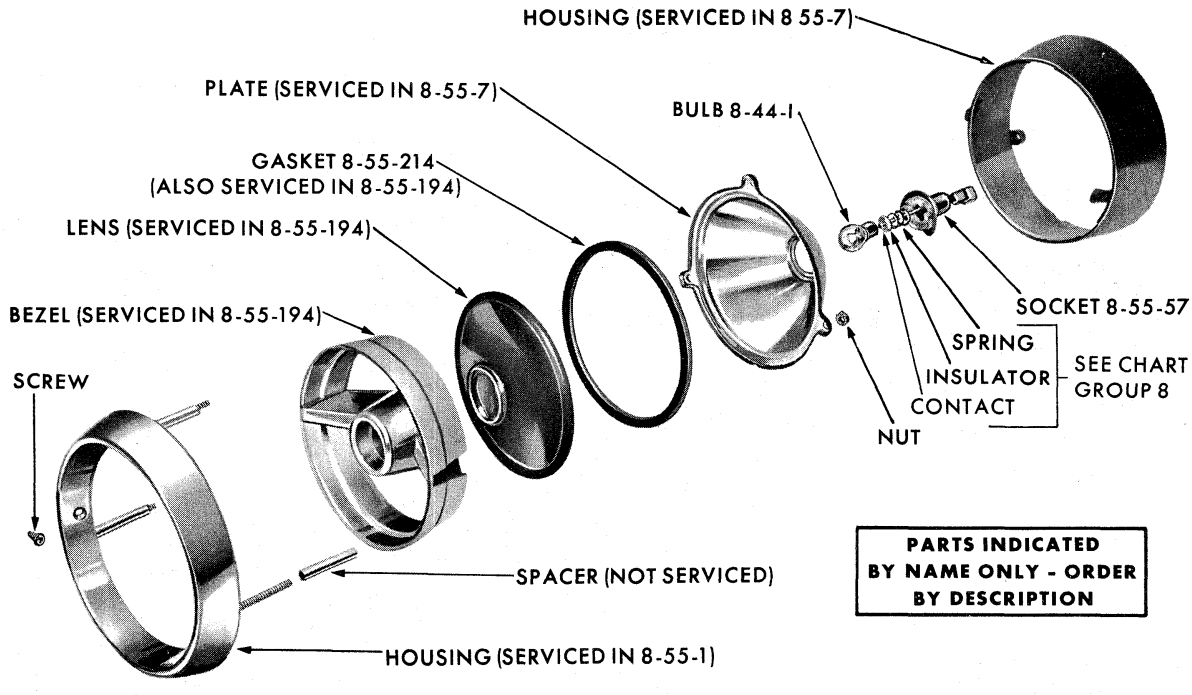


TAIL AND STOP LAMPS - DODGE PD1-2



MyMopar.com

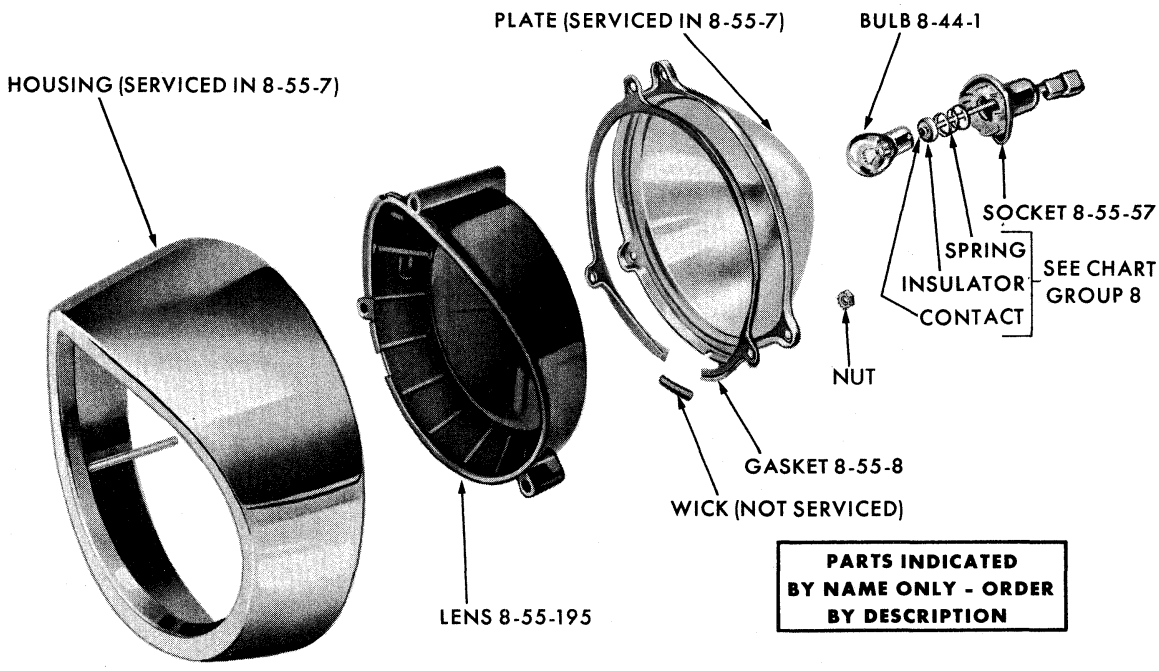


TAIL AND STOP LAMPS - DODGE PD3-4

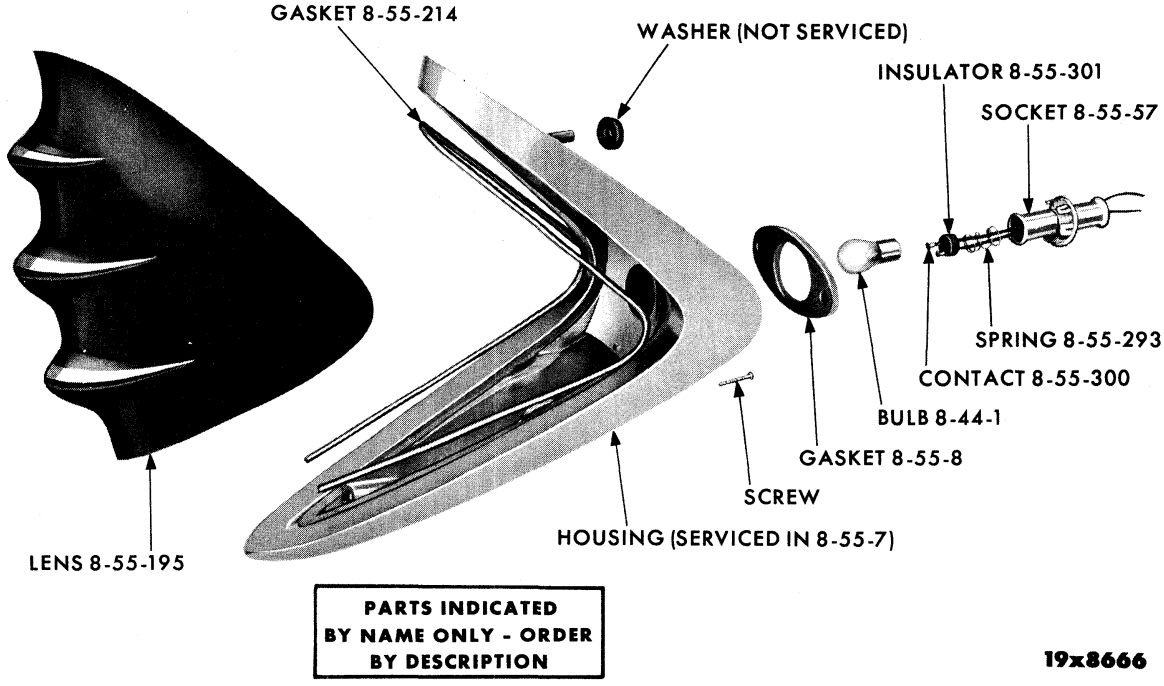


TAIL AND STOP LAMPS - DESOTO PS1-3



MyMopar.com

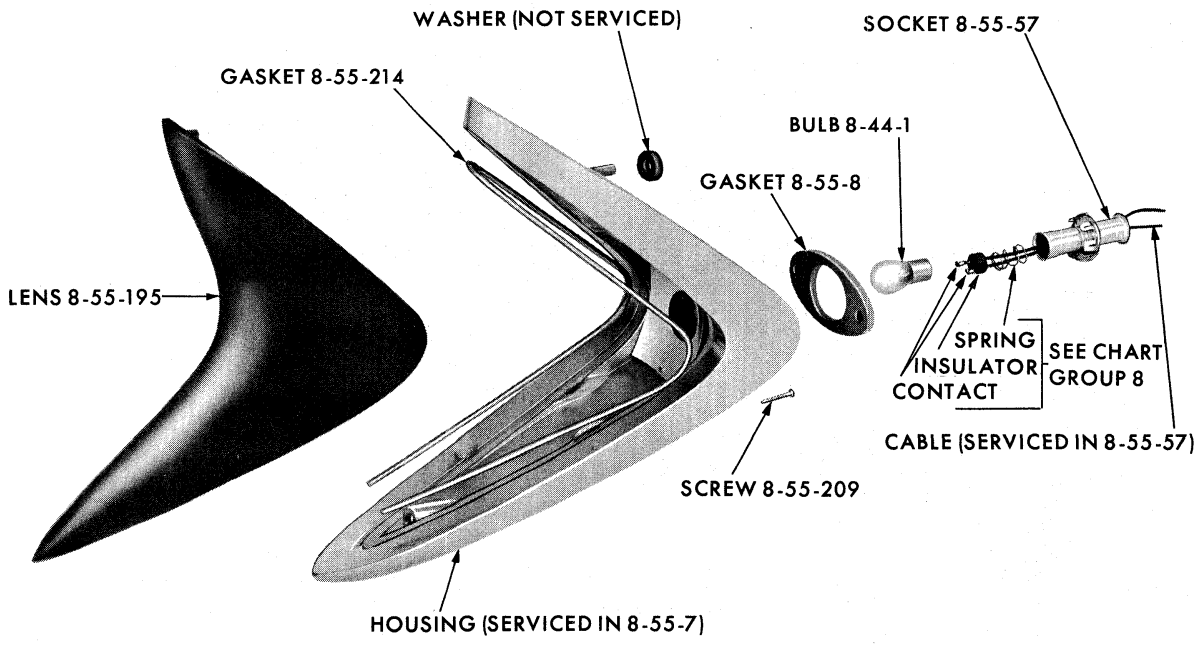


19x8616A

TAIL AND STOP LAMPS - CHRYSLER PC1-2-3

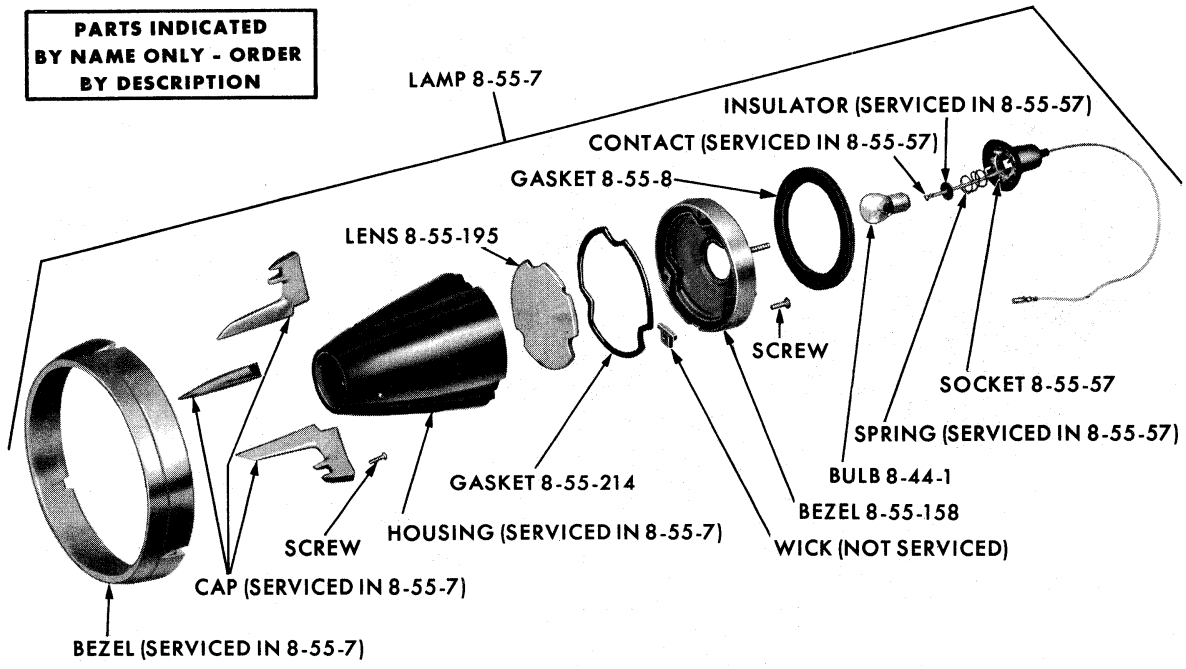


19x8614

TAIL AND STOP LAMPS - IMPERIAL PY1



MyMopar.com

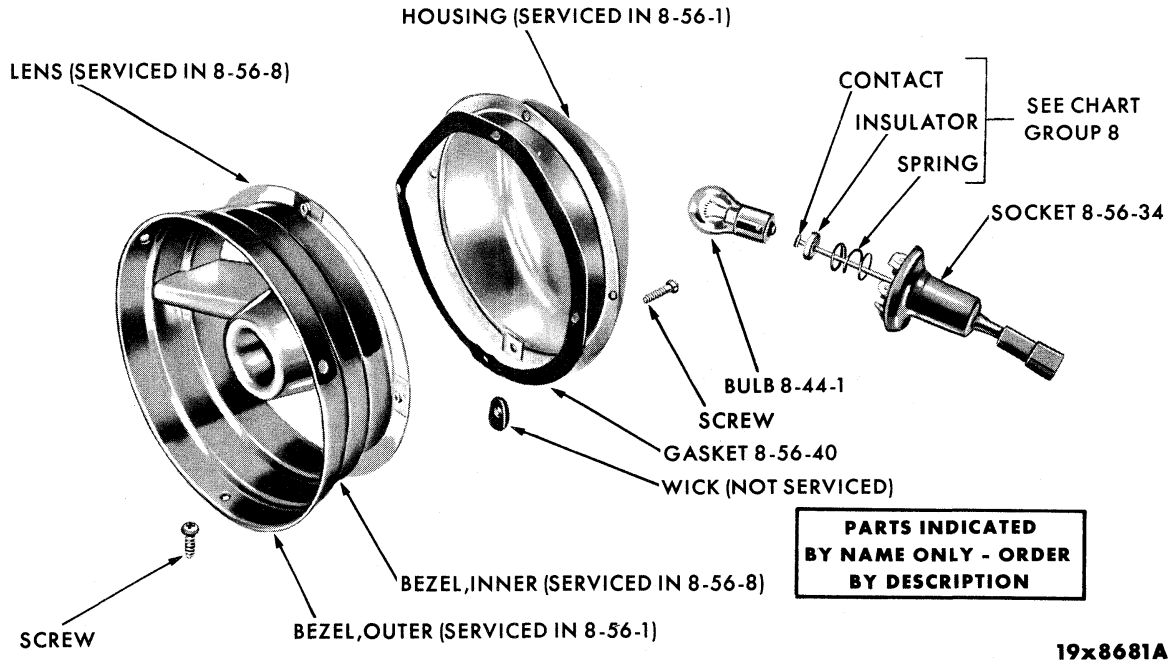


BACK-UP **LAMP** - DODGE PD1-2

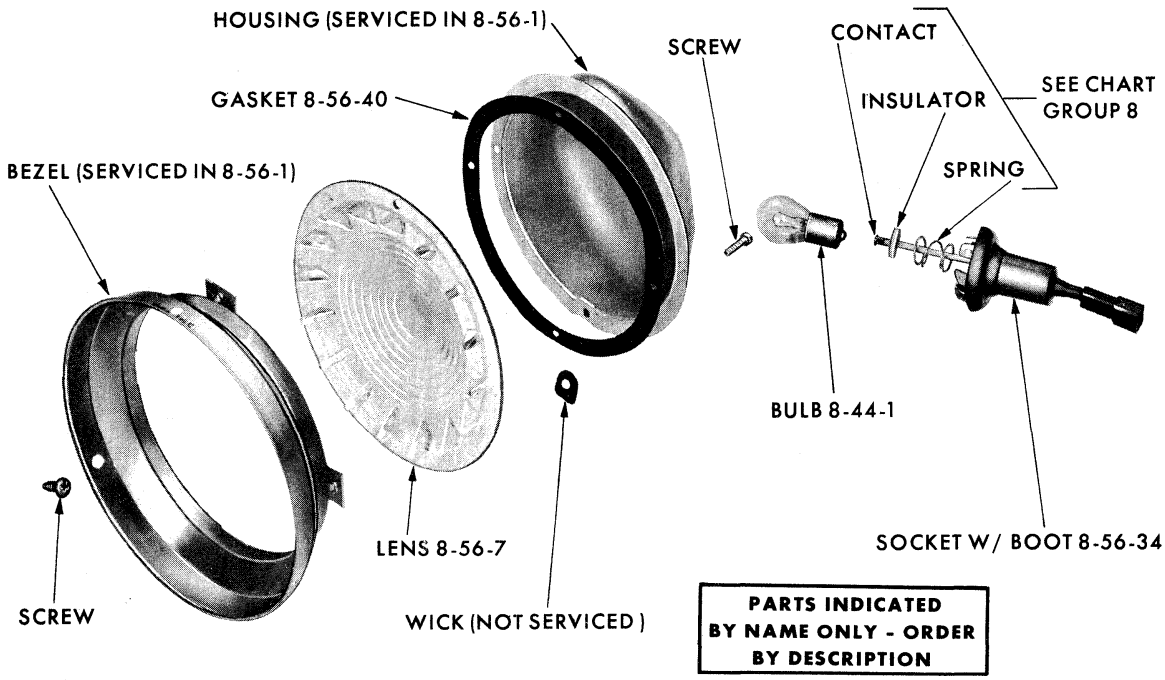


BACK-UP LAMP - DODGE PD3-4


MyMopar.com

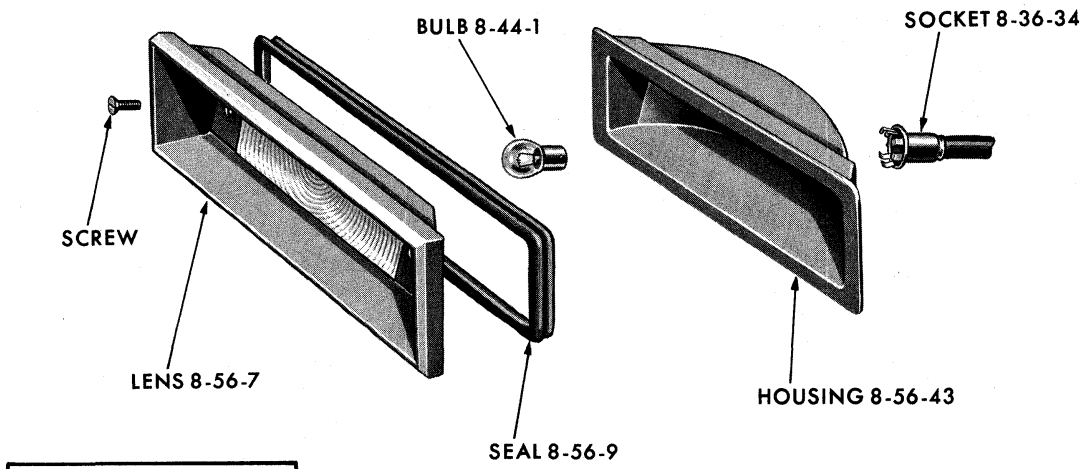


**PARTS INDICATED BY NAME ONLY - ORDER BY DESCRIPTION**

19x8669

BACK-UP LAMP - DESOTO PS1-3

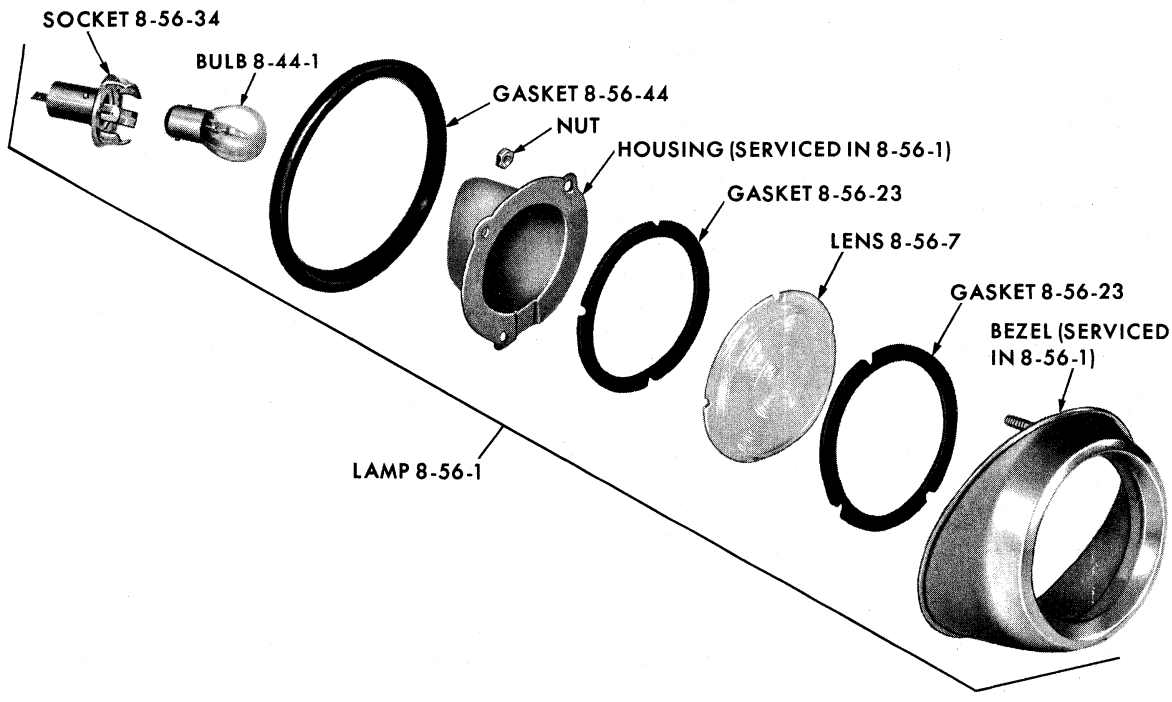


19x8612

BACK-UP LAMP - CHRYSLER PC1-2-3



MyMopar.com

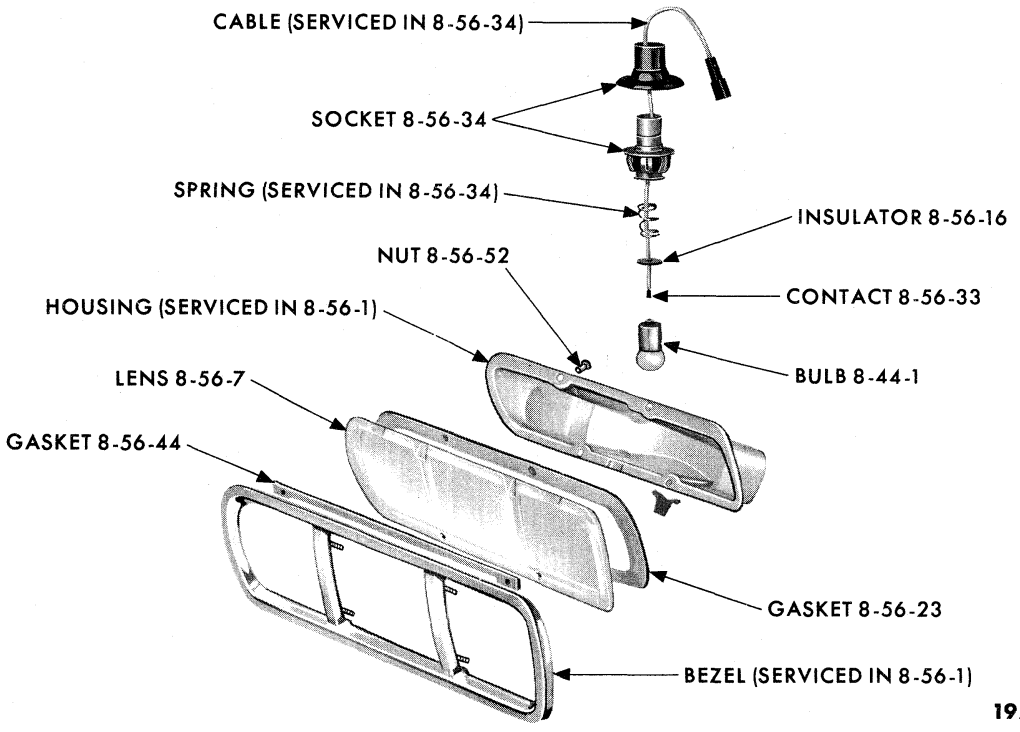


BACK-UP LAMP - IMPERIAL PY1

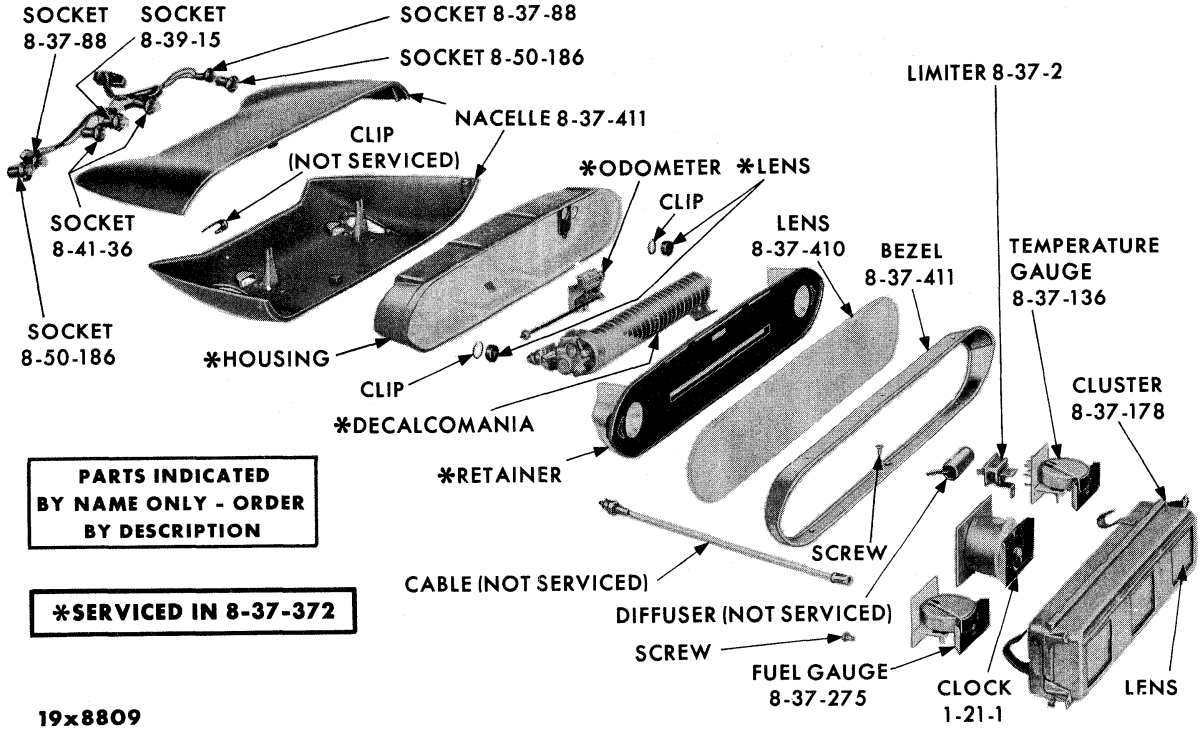


INSTRUMENT CLUSTER - PLYMOUTH PP1-2


MyMopar.com

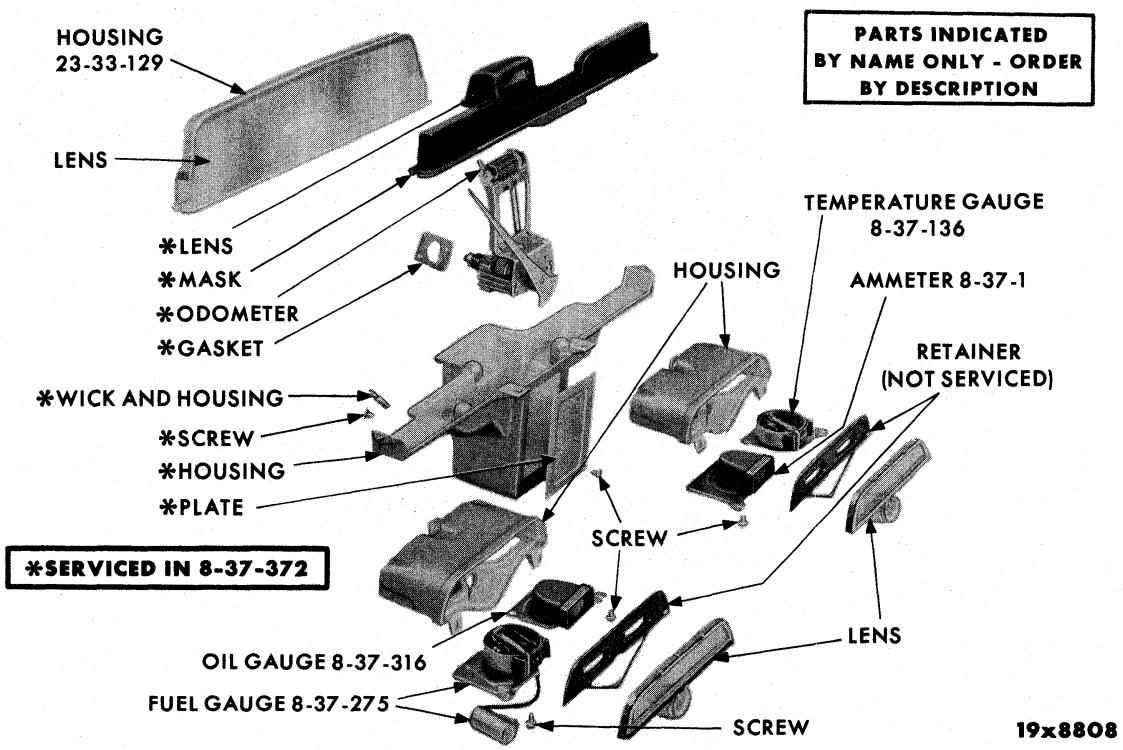


INSTRUMENT CLUSTER - DODGE PD1-2-3-4

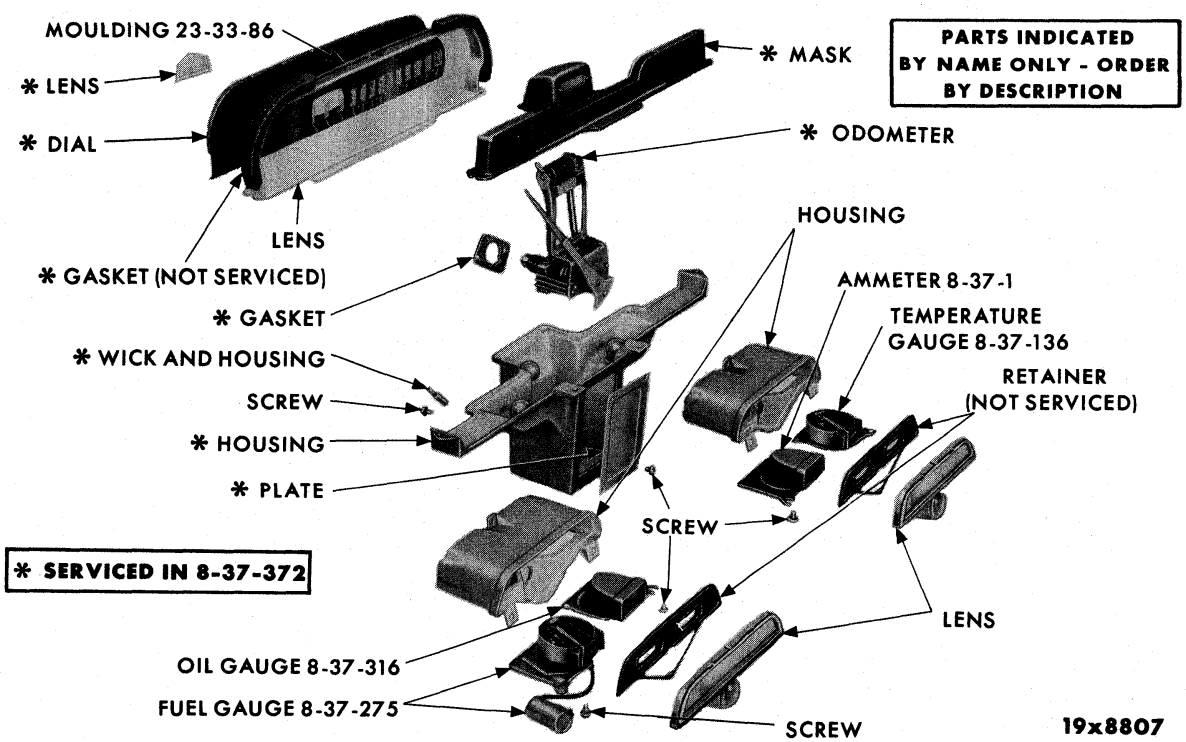


INSTRUMENT CLUSTER - DESOTO PS1-3



MyMopar.com

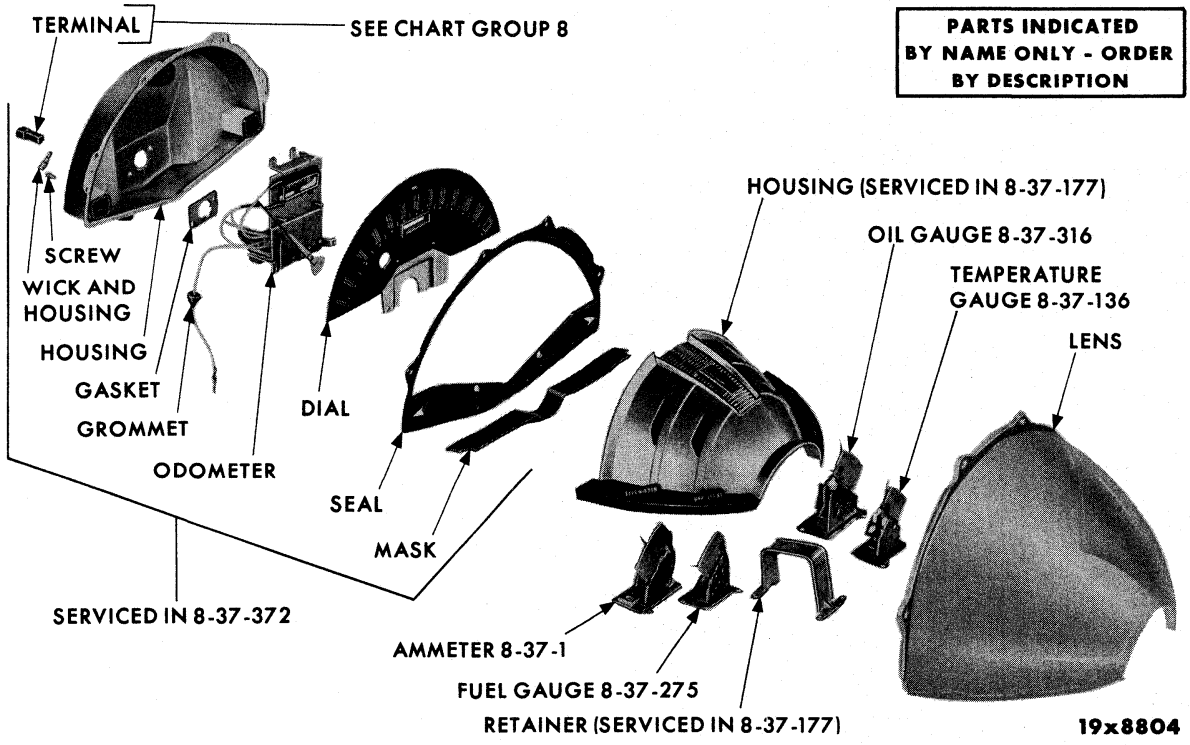


INSTRUMENT CLUSTER - CHRYSLER PC1-2-3

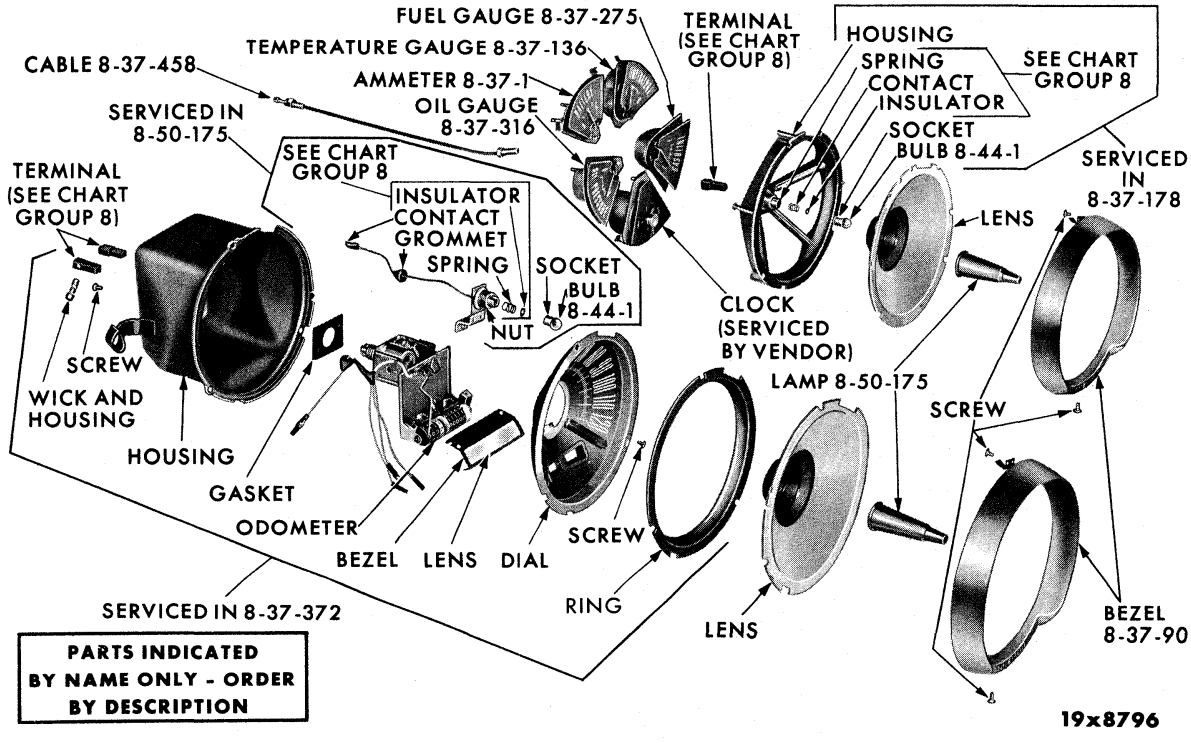


INSTRUMENT CLUSTER - IMPERIAL PY1


MyMopar.com

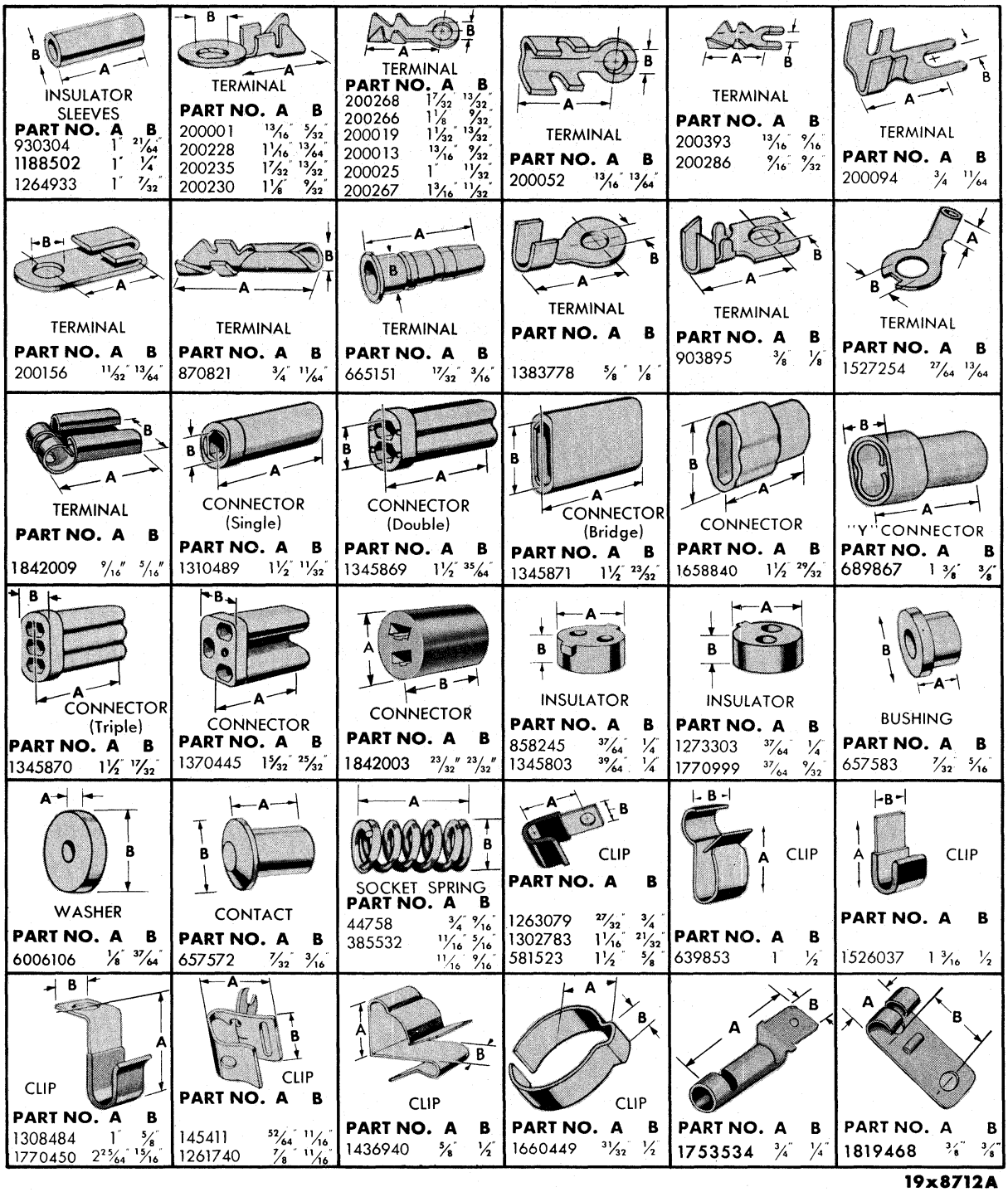

INSULATOR SLEEVES

| PART NO. | A | B |
|---|---|---|
| 930304 | 1" | 21/64" |
| 1188502 | 1" | 1/4" |
| 1264933 | 1" | 7/32" |

TERMINAL

| PART NO. | A | B |
|---|---|---|
| 200001 | 13/16" | 5/32" |
| 200228 | 1 1/16" | 13/64" |
| 200235 | 1 7/32" | 13/32" |
| 200230 | 1 1/8" | 9/32" |

TERMINAL

| PART NO. | A | B |
|---|---|---|
| 200268 | 1 7/32" | 13/32" |
| 200266 | 1 1/8" | 9/32" |
| 200019 | 1 1/32" | 13/32" |
| 200013 | 13/16" | 9/32" |
| 200025 | 1" | 11/32" |
| 200267 | 1 3/16" | 11/32" |

TERMINAL

| PART NO. | A | B |
|---|---|---|
| 200052 | 13/16" | 13/64" |

TERMINAL

| PART NO. | A | B |
|---|---|---|
| 200393 | 13/16" | 9/16" |
| 200286 | 9/16" | 9/32" |

TERMINAL

| PART NO. | A | B |
|---|---|---|
| 200094 | 3/4" | 11/64" |

TERMINAL

| PART NO. | A | B |
|---|---|---|
| 200156 | 11/32" | 13/64" |

TERMINAL

| PART NO. | A | B |
|---|---|---|
| 870821 | 3/4" | 11/64" |

TERMINAL

| PART NO. | A | B |
|---|---|---|
| 665151 | 17/32" | 3/16" |

TERMINAL

| PART NO. | A | B |
|---|---|---|
| 1383778 | 5/8" | 1/8" |

TERMINAL

| PART NO. | A | B |
|---|---|---|
| 903895 | 3/8" | 1/8" |

TERMINAL

| PART NO. | A | B |
|---|---|---|
| 1527254 | 27/64" | 13/64" |

TERMINAL

| PART NO. | A | B |
|---|---|---|
| 1842009 | 9/16" | 5/16" |

CONNECTOR (Single)

| PART NO. | A | B |
|---|---|---|
| 1310489 | 1 1/2" | 11/32" |

CONNECTOR (Double)

| PART NO. | A | B |
|---|---|---|
| 1345869 | 1 1/2" | 35/64" |

CONNECTOR (Bridge)

| PART NO. | A | B |
|---|---|---|
| 1345871 | 1 1/2" | 23/32" |

CONNECTOR

| PART NO. | A | B |
|---|---|---|
| 1658840 | 1 1/2" | 29/32" |

"Y" CONNECTOR

| PART NO. | A | B |
|---|---|---|
| 689867 | 1 3/8" | 3/8" |

CONNECTOR (Triple)

| PART NO. | A | B |
|---|---|---|
| 1345870 | 1 1/2" | 17/32" |

CONNECTOR

| PART NO. | A | B |
|---|---|---|
| 1370445 | 1 5/32" | 25/32" |

CONNECTOR

| PART NO. | A | B |
|---|---|---|
| 1842003 | 23/32" | 23/32" |

INSULATOR

| PART NO. | A | B |
|---|---|---|
| 858245 | 37/64" | 1/4" |
| 1345803 | 39/64" | 1/4" |

INSULATOR

| PART NO. | A | B |
|---|---|---|
| 1273303 | 37/64" | 1/4" |
| 1770999 | 37/64" | 9/32" |

BUSHING

| PART NO. | A | B |
|---|---|---|
| 657583 | 7/32" | 5/16" |

WASHER

| PART NO. | A | B |
|---|---|---|
| 6006106 | 1/8" | 37/64" |

CONTACT

| PART NO. | A | B |
|---|---|---|
| 657572 | 7/32" | 3/16" |

SOCKET SPRING

| PART NO. | A | B |
|---|---|---|
| 44758 | 3/4" | 9/16" |
| 385532 | 11/16" | 5/16" |
| | 11/16" | 9/16" |

CLIP

| PART NO. | A | B |
|---|---|---|
| 1263079 | 27/32" | 3/4" |
| 1302783 | 1 1/16" | 21/32" |
| 581523 | 1 1/2" | 5/8" |

CLIP

| PART NO. | A | B |
|---|---|---|
| 639853 | 1" | 1/2" |

CLIP

| PART NO. | A | B |
|---|---|---|
| 1526037 | 1 3/16 | 1/2 |

CLIP

| PART NO. | A | B |
|---|---|---|
| 1308484 | 1" | 5/8" |
| 1770450 | 2 25/64" | 15/16" |

CLIP

| PART NO. | A | B |
|---|---|---|
| 145411 | 52/64" | 11/16" |
| 1261740 | 7/8" | 11/16" |

CLIP

| PART NO. | A | B |
|---|---|---|
| 1436940 | 5/8" | 1/2" |

CLIP

| PART NO. | A | B |
|---|---|---|
| 1660449 | 31/32" | 1/2" |

| PART NO. | A | B |
|---|---|---|
| 1753534 | 3/4" | 1/4" |

| PART NO. | A | B |
|---|---|---|
| 1819468 | 3/8" | 3/8" |

19x8712A

CHART



MyMopar.com

| | | | |
|---|---|---|---|
| PLUG AND WIRING<br>1793764<br>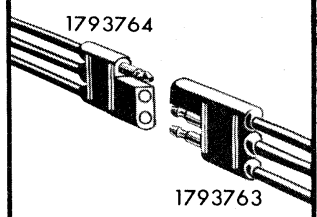<br>1793763 | PLUG AND WIRING<br>1791514<br>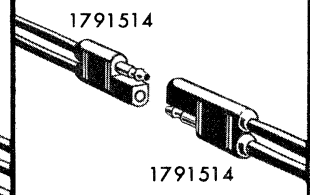<br>1791514 | PLUG AND WIRING<br>1793799<br>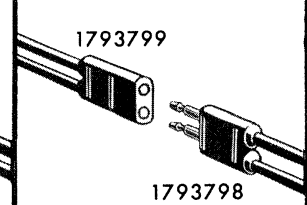<br>1793798 | PLUG AND WIRING<br>1793796<br>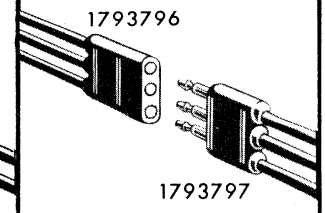<br>1793797 |
| 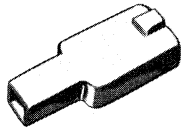<br>CONNECTOR 1819362 | CONNECTOR (10)<br>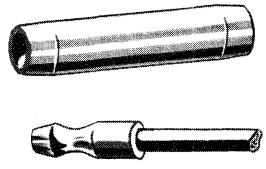<br>TERMINAL (20)<br>**1843444 PACKAGE** | CONNECTOR<br>1842003<br>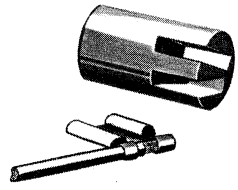<br>1842009<br>TERMINAL | 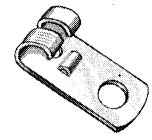<br>1819468 TERMINAL |
| 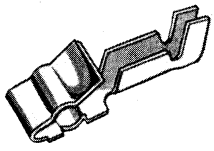<br>TERMINAL (10)<br>**1843220 PACKAGE** | 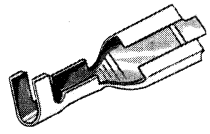<br>TERMINAL (10)<br>(SILVER-PLATED)<br>**1843221 PACKAGE** | INSULATOR (1)<br>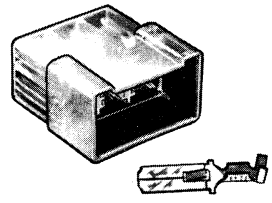<br>TERMINAL (6)<br>**1843222 PACKAGE** | INSULATOR (1)<br>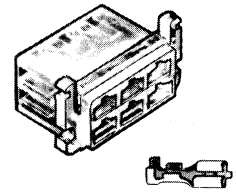<br>TERMINAL (6)<br>**1843223 PACKAGE** |
| INSULATOR (10)<br>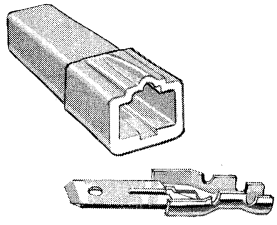<br>TERMINAL (10)<br>**2084420 PACKAGE** | INSULATOR (10)<br>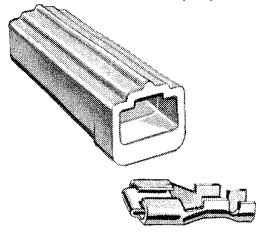<br>TERMINAL (10)<br>**2084421 PACKAGE** | INSULATOR (1)<br>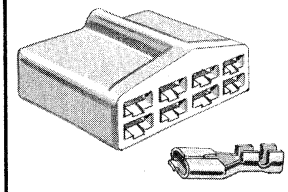<br>TERMINAL (8)<br>**2084424 PACKAGE** | INSULATOR (1)<br>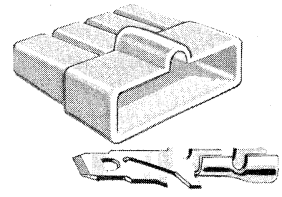<br>TERMINAL (8)<br>**2084425 PACKAGE** |
| INSULATOR (10)<br>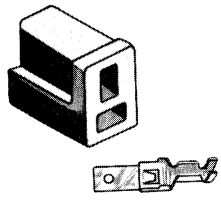<br>TERMINAL (20)<br>**1843224 PACKAGE** | INSULATOR (10)<br>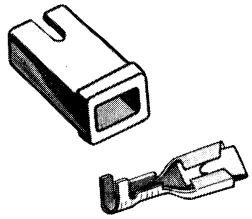<br>TERMINAL (10)<br>**1843225 PACKAGE** | INSULATOR (10)<br>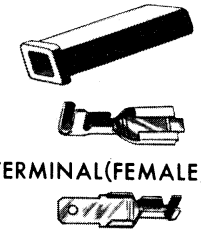<br>TERMINAL(FEMALE)(10)<br>TERMINAL (MALE)(10)<br>**1843226 PACKAGE** | INSULATOR (10)<br>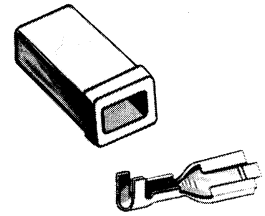<br>TERMINAL(FEMALE)(10)<br>**1843227 PACKAGE** |

**NUMBERS IN PARENTHESES INDICATE QUANTITY INCLUDED IN PACKAGE**

**19x8186E**

CHART



MyMopar.com

| CODE | PART NAME AND DESCRIPTION | NO. OF CYL. | PLYMOUTH | DODGE | DESOTO | CHRYSLER AND IMPERIAL | PER CAR | PART NUMBER |
|---|---|---|---|---|---|---|---|---|

## NOTES


MyMopar.com

# GROUP 8 - ELECTRICAL

| CODE | PART NAME AND DESCRIPTION | NO. OF CYL. | PLYMOUTH | DODGE | DESOTO | CHRYSLER AND IMPERIAL | PER CAR | PART NUMBER |
|---|---|---|---|---|---|---|---|---|
| **8-01-0** | **BATTERIES AND CABLES** | | | | | | | |
| 8-01-4 | CABLE, Battery Ground, 41" long | 6 | 60 | 60 | - | - | 1 | 1879 945 |
| | 23" long | 8 | 60 | 60 | 60 | 60 | 1 | 1879 944 |
| 8-01-17 | CABLE, Battery to Starter Solenoid 13" long. | 6-8 | 60 | 60 | - | - | 1 | 2084 071 |
| | Battery to Starter Relay, PC1, 13" long | 8 | - | - | 60 | 60 | 1 | 2084 071 |
| | Starter Relay to Starter, PC1, 29" long | 8 | - | - | 60 | 60 | 1 | 1879 938 |
| | Battery to Starter Relay, PC2, PC3, PY1, 19" long | 8 | - | - | - | 60 | 1 | 2084 070 |
| | Starter Relay to Starter, PC2, PC3, PY1, 13" long | 8 | - | - | - | 60 | 1 | 2084 071 |
| **8-05-0** | **DOME LAMP AND SWITCH** | | | | | | | |
| 8-05-6 | HOUSING and SWITCH, Roof Dome Lamp, Rear, Sub., PC1, PC3 | 6-8 | 60 | 60 | - | 60 | 1 | 2161 308 |
| | Dome Lamp, except Cv. Cp., PD3, PD4 | 6-8 | 60 | 60 | - | - | 1 | 1963 603 |
| | Roof Bow No. 2 Dome Lamp, 2 D. and 4 D. | 6-8 | 60 | 60 | - | - | 1 | 1963 606 |
| | PD1, PD2, 2 D., 4 D. and Sub., PS1, PS3, PC1, PC2, PC3, 4 D | 8 | - | 60 | 60 | 60 | 1 | 1963 603 |
| | Roof Bow No. 2 Dome Lamp, PS1, PS3, PC1, PC2, PC3, 4 D. | 8 | - | - | 60 | 60 | 1 | 1963 606 |
| 8-05-8 | LENS and BEZEL, Roof Dome Lamp, Sub., PC1, PC3, Rear | 6-8 | 60 | 60 | - | 60 | 1 | ⊟2161 307 |
| 8-05-11 | RETAINER, Mounting Bracket Wire, PY1 except Cv. Cp. | 8 | - | - | - | 60 | 2 | 6006 071 |
| 8-05-12 | SOCKET and BRACKET, Dome Lamp, except Cv. Cp. | 6-8 | 60 | - | - | - | 1 | 2096 499 |
| | PD1, PD2, 2 D., 4 D. and 2 Seat Sub., PD3, PD4, 2 D., Sp. Cl. Cp., 4 D., Sp. 4 D. and 2 Seat Sub. | 6-8 | - | 60 | - | - | 1 | 2096 499 |
| | PD1, PD2, Sp. Cl. Cp., Sp. 4 D. and 3 Seat Sub., PS1, PS3, Sp. Cl. Cp. and Sp. 4 D., PC1, PC2, PC3, Sp. Cl. Cp., Sp. 4 D. and Sub. | 8 | - | 60 | 60 | 60 | 2 | 1704 875 |
| | 4 D., PC1, PC2, PC3 | 8 | - | - | 60 | 60 | 1 | 1704 875 |
| | PY1 except Cv. Cp. | 8 | - | - | - | 60 | 1 | 1704 875 |
| 8-05-14 | SWITCH, Dome Lamp | 6-8 | 60 | - | - | - | 1 | 2084 296 |
| | | 6-8 | - | 60 | 60 | - | 1 | 1972 507 |
| | PC1, PC2, PC3 | 8 | - | - | - | 60 | 1 | 1972 669 |
| | Roof Rail Dome Lamp, except Cv. Cp., PY1 | 8 | - | - | - | 60 | 1 | 2096 180 |
| 8-05-16 | KNOB, Dome Lamp Switch, PD3, PD4 | 6-8 | - | 60 | 60 | - | 1 | *1887 909 |
| | PD1, PD2 | 8 | - | 60 | - | - | 1 | 1887 860 |
| | PC1, PC2, PC3 | 8 | - | - | - | 60 | 1 | 1887 991 |
| 8-05-20 | BEZEL, Dome Lamp Switch Mounting | 6-8 | - | 60 | 60 | - | 1 | 1887 789 |
| | Roof Rail Dome Lamp Switch, PY1 except Cv. Cp. | 8 | - | - | - | 60 | 1 | 2096 181 |
| 8-05-22 | FUSE, Dome and Map, 6 ampere | 8 | - | - | - | 60 | 1 | 147 683 |
| 8-05-23 | LENS, Roof Dome Lamp, except Cv. Cp., PD3, PD4 | 6-8 | 60 | 60 | - | - | 1 | 1963 602 |
| | PD1, PD2, except Sp. Cl. Cp., Cv. Cp. and Sp. 4 D. | 8 | - | 60 | - | - | 1 | 1963 602 |
| | w/o Switch, PS1 Sp. 4 D., PS3 Sp. Cl. Cp. and Sp. 4 D., PC1, PC2, PC3, Sp. Cl. Cp., Sp. 4 D. and Sub. | 8 | - | - | 60 | 60 | 2 | 2080 280 |
| | Except Cv. Cp., PY1. | 8 | - | - | - | 60 | 1 | 1902 298 |
| 8-05-24 | NUT, Dome Lamp Switch Mounting, PC1, PC2, PC3 | 8 | - | - | - | 60 | 1 | 1971 521 |
| 8-05-32 | CORE, Roof Dome Lamp Socket, Rear Compartment, Sub., PC1, PC3 | 6-8 | 60 | 60 | - | 60 | 1 | 2161 316 |

★ Indicates use as required. Numerals in parentheses ( ) refer to notes. Printed in U.S.A.
⊟ Indicates parts not listed in any previous parts book. Prices and specifications subject to change without notice.
* Indicates change or addition.


Dec. 9, 1960 Supersedes April 20, 1960.

MyMopar.com

| CODE | PART NAME AND DESCRIPTION | NO. OF CYL. | PLYMOUTH | DODGE | DESOTO | CHRYSLER AND IMPERIAL | PER CAR | PART NUMBER |
|---|---|---|---|---|---|---|---|---|
| **8-06-0** | **QUARTER PANEL ORNAMENT LAMP** | | | | | | | |
| 8-06-1 | LAMP PACKAGE, Quarter Panel Ornament, PD2 | 8 | - | 60 | - | - | 1 | 2084 441 |
| 8-06-2 | SOCKET, Quarter Panel Ornament Lamp, PD2 | 8 | - | 60 | - | - | 2 | 2096 586 |
| **8-11-0** | **QUARTER OR COURTESY LAMP** | | | | | | | |
| 8-11-6 | SWITCH, Courtesy Lamp, except Cv. Cp. | 6-8 | 60 | - | - | - | 1 | *1971 931 |
| | | 6-8 | - | 60 | - | - | 1 | *1971 931 |
| 8-11-8 | SOCKET, Quarter Arm Rest Courtesy Light, Cv. Cp. | 8 | - | 60 | - | 60 | 2 | 1963 479 |
| 8-11-12 | LENS AND RETAINER, Quarter Arm Rest Courtesy Light Bezel, PD2, PD4, PC1, PC3, Cv. Cp. | 8 | - | 60 | - | 60 | 2 | 1623 132 |
| | Rear Pocket Panel Courtesy Lamp, Cv. Cp., PY1 | 8 | - | - | - | 60 | 2 | 1623 132 |
| 8-11-13 | LENS, Roof Side Rail Courtesy Lamp, PD1, PD2, Sp. Cl. Cp., Sp. 4 D. and Sub. | 8 | - | 60 | - | - | 2 | ⊟1954 631 |
| **8-12-0** | **AUTOMATIC LAMP DOOR SWITCH** | | | | | | | |
| 8-12-2 | SWITCH, Front Door, w/Straight Type Sleeve Connector | 6-8 | 60 | 60 | 60 | 60 | 2 | 1971 931 |
| | Rear Door, w/Elbow Type Sleeve Connector | 6-8 | 60 | 60 | 60 | 60 | 2 | 1972 329 |
| | Front Door Automatic Door, w/Elbow Type Sleeve Connector | 8 | - | - | - | 60 | 2 | *1972 329 |
| 8-12-3 | SOCKET, Open Door Indicator Lamp, 4 D. | 6-8 | 60 | - | - | - | 1 | 1314 619 |
| | 4 D. Taxi | 6-8 | - | 60 | - | - | 1 | 1658 830 |
| 8-12-14 | LAMP, Open Door Indicator, 4 D. Taxi | 6-8 | - | 60 | - | - | 1 | 2096 526 |
| **8-13-0** | **TRUNK LAMP** | | | | | | | |
| 8-13-1 | SWITCH, SOCKET and CABLE, Trunk Lamp, PY1 | 8 | - | - | - | 60 | 1 | 1770 786 |
| 8-13-2 | SWITCH, Trunk Lamp, except Sub., PC1, PC2, PC3 | 6-8 | 60 | 60 | 60 | 60 | 1 | 1972 426 |
| 8-13-3 | SOCKET and BRACKET, Trunk Lamp, except Sub., PC1, PC2, PC3 | 6-8 | 60 | 60 | 60 | 60 | 1 | 2096 857 |
| 8-13-9 | TERMINAL, Trunk Lamp Switch Cable, except Sub., PC1, PC2, PC3 | 6-8 | 60 | 60 | 60 | 60 | 1 | * 665 151 |
| | | 8 | - | - | - | 60 | 1 | 1753 534 |
| **8-15-0** | **CHASSIS AND BODY WIRING** | | | | | | | |
| 8-15-2 | WIRING, Chassis and Instrument Panel | 6-8 | 60 | - | - | - | 1 | 1971 051 |
| | | 6-8 | - | 60 | - | - | 1 | 2096 582 |
| | | 8 | - | - | 60 | - | 1 | 1972 905 |
| | PC1, PC2, PC3 | 8 | - | - | - | 60 | 1 | 1971 789 |
| | PY1 UP TO approx. Serial No. PY1-115 394 | 8 | - | - | - | 60 | 1 | *2096 086 |
| | PY1 AFTER approx. Serial No. PY1-115 394 | 8 | - | - | - | 60 | 1 | ⊟2198 264 |
| 8-15-3 | BRACKET and CIRCUIT BREAKER, Fuse Block Mounting, PC1, PC2, PC3 | 8 | - | - | - | 60 | 1 | 2097 150 |
| | PY1 | 8 | - | - | - | 60 | 1 | 1971 328 |
| 8-15-4 | WIRING, Body, Rear, 4 D. Sub., w/o Back-up Lamp | 6-8 | 60 | - | - | - | 1 | 2096 337 |
| | w/Back-Up Lamp | 6-8 | 60 | - | - | - | 1 | 2096 338 |
| | w/Electric Tail Gate, 2 D. Sub. | 6-8 | 60 | - | - | - | 1 | 2096 662 |
| | w/o Electric Tail Gate, 2 D. Sub. | 6-8 | 60 | - | - | - | 1 | 2096 661 |
| | Except Sub., PD1, PD3, PD4 | 6-8 | - | 60 | - | - | 1 | 1887 768 |
| | Sub. | 6-8 | - | 60 | - | - | 1 | 2096 395 |
| | Except Sub., PD2 | 8 | - | 60 | - | - | 1 | 2096 400 |
| | Sub., PC1, PC3, UP TO | 8 | - | - | - | 60 (1) | 1 | 2096 394 |
| | Sub., PC1, PC3, AFTER | 8 | - | - | - | 60 (1) | 1 | 2096 338 |
| | PY1 | 8 | - | - | - | 60 | 1 | 1972 803 |
| | Front, PY1 Cv. Cp. | 8 | - | - | - | 60 | 1 | 2097 510 |

NOTE 1: PC1 Serial No. 8503-102718 PC3 Serial No. 8703-102718



MyMopar.com

| CODE | PART NAME AND DESCRIPTION | NO. OF CYL. | PLYMOUTH | DODGE | DESOTO | CHRYSLER AND IMPERIAL | PER CAR | PART NUMBER |
|---|---|---|---|---|---|---|---|---|
| **8-15-0** | **CHASSIS AND BODY WIRING - Cont'd** | | | | | | | |
| 8-15-6 | TERMINAL and Fuse CLIP, Fuse Block | 8 | - | - | - | 60 | 1 | *2197 136 |
| 8-15-7 | WIRING, Generator to Regulator | 6 | 60 | 60 | - | - | 1 | ⊟2097 847 |
| | High Performance, w/361 cubic in. Eng. | 8 | 60 | - | - | - | 1 | *2096 302 |
| | w/318 cubic in. Eng. | 8 | 60 | - | - | - | 1 | ⊟1971 472 |
| | PD4 w/318 cubic in. Eng. | 8 | - | 60 | - | - | 1 | *2096 873 |
| | PD1, PD2, PD4 w/High Performance and w/361 cubic in. Eng. | 8 | - | 60 | - | - | 1 | ⊟2096 889 |
| | Alternator to Regulator, PY1 | 8 | - | - | - | 60 | 1 | 2076 632 |
| **8-16-0** | **CABLE AND CONNECTIONS** | | | | | | | |
| | NOTE: For a more practical and economical method of servicing, only the more complicated assemblies will be stocked for service. These will be found listed in their respective groups. On the more simple assemblies the required length and size of cable, necessary terminals, etc., should be specified. For visual chart of insulator and terminal packages see front of group. | | | | | | | |
| 8-16-1 | CONNECTOR and TERMINAL PACKAGE, Headlamp Cable | 6-8 | 60 | 60 | 60 | 60 | ★ | 1879 609 |
| | 8 Pole Male | 6-8 | 60 | 60 | 60 | 60 | ★ | 2084 425 |
| | 8 Pole Female | 6-8 | 60 | 60 | 60 | 60 | ★ | 2084 424 |
| | 6 Pole Disconnect Male | 6-8 | 60 | 60 | 60 | 60 | ★ | 1843 222 |
| | Single Pole, Long | 6-8 | 60 | 60 | 60 | 60 | ★ | 1843 226 |
| | Single Pole, Short | 6-8 | 60 | 60 | 60 | 60 | ★ | 1843 227 |
| | Female, Miniature | 6-8 | 60 | 60 | 60 | 60 | ★ | 2084 421 |
| | Male, Miniature | 6-8 | 60 | 60 | 60 | 60 | ★ | 2084 420 |
| 8-16-2 | CABLE (sold by the inch) No. 12 Red | 6-8 | 60 | 60 | 60 | 60 | ★ | 1786 037 |
| | No. 14 Green | 6-8 | 60 | 60 | 60 | 60 | ★ | 1786 009 |
| | No. 16 Blue | 6-8 | 60 | 60 | 60 | 60 | ★ | 1785 972 |
| | No. 18 Yellow | 6-8 | 60 | 60 | 60 | 60 | ★ | 1786 052 |
| 8-16-3 | CABLE (sold by the 100 foot spool) No. 12 Red | 6-8 | 60 | 60 | 60 | 60 | ★ | 1752 491 |
| | No. 14 Green | 6-8 | 60 | 60 | 60 | 60 | ★ | 830 812 |
| | No. 16 Blue | 6-8 | 60 | 60 | 60 | 60 | ★ | 1752 489 |
| | No. 18 Yellow | 6-8 | 60 | 60 | 60 | 60 | ★ | 1752 488 |
| | Horn Cable, No. 16 Black | 6-8 | 60 | 60 | 60 | 60 | ★ | 1064 754 |
| 8-16-4 | TERMINAL, Female, Side Type | 6-8 | 60 | 60 | 60 | 60 | ★ | 1842 009 |
| | TERMINAL, Male Blade Crimped, K-Type | 6-8 | 60 | 60 | 60 | 60 | ★ | 1753 534 |
| | TERMINAL, Cable Connector | 6-8 | 60 | 60 | 60 | 60 | ★ | * 870 821 |
| 8-16-5 | SLEEVE, Wiring Terminal, Black | 6-8 | 60 | 60 | 60 | 60 | ★ | 1264 933 |
| 8-16-8 | CONNECTOR, 2 Way Polarized, Female | 6-8 | 60 | 60 | 60 | 60 | ★ | 1842 003 |
| | Single Cable | 6-8 | 60 | 60 | 60 | 60 | ★ | 611 898 |
| 8-16-10 | PLUG, Cable Connector, No. 12 Cable | 6-8 | 60 | 60 | 60 | 60 | ★ | 665 151 |
| **8-17-0** | **FUSES** | | | | | | | |
| 8-17-2 | FUSE, 60 amp. | 6-8 | 60 | 60 | 60 | 60 | 1 | ⊟2258 284 |
| **8-19-0** | **INSTRUMENT PANEL WIRING** | | | | | | | |
| 8-19-3 | WIRING, Window Lift, Cigar Lighter and Tack Lamp, PC3-300 Sp. Cl. Cp. and Cv. Cp. | 8 | - | - | - | 60 | 1 | 2096 917 |
| 8-19-25 | WIRING, Speedometer Housing | 6-8 | - | 60 | - | - | 1 | ⊟2096 539 |
| | | 8 | - | - | 60 | - | 1 | ⊟2096 712 |
| 8-19-39 | TERMINAL, Temperature Gauge Wiring, PY1 | 8 | - | - | - | 60 | 1 | 1770 660 |
| 8-19-64 | CABLE, Cigar Lighter Feed, PC1, PC2, PC3 | 8 | - | - | - | 60 | 1 | 2096 714 |
| 8-19-83 | HOUSING and CABLE, Ash Receiver Lamp Switch | 8 | - | - | 60 | 60 | 1 | 1887 726 |
| **8-20-0** | **CIGAR LIGHTER** | | | | | | | |
| 8-20-3 | FUSE, Swivel Seat Base Rear Cigar Lighter Heat Limiter, PC3 | 8 | - | - | - | 60 | 1 | 1887 222 |
| | Rear Compartment Cigar Lighter, PC3-300 | 8 | - | - | - | 60 | 1 | 147 685 |
| | Rear Console Cigar Lighter Heat Limiter, PC3-300 | 8 | - | - | - | 60 | 1 | 1887 222 |


MyMopar.com

| CODE | PART NAME AND DESCRIPTION | NO. OF CYL. | PLYMOUTH | DODGE | DESOTO | CHRYSLER AND IMPERIAL | PER CAR | PART NUMBER |
|---|---|---|---|---|---|---|---|---|
| **8-20-0** | **CIGAR LIGHTER - Cont'd** | | | | | | | |
| 8-20-7 | KNOB and Heat ELEMENT, Instrument Panel, PY1 | 8 | - | - | - | 60 | 1 | 1887 953 |
| 8-20-8 | KNOB, Instrument Panel Cigar Lighter | 6-8 | 60 | - | - | - | 1 | 1887 593 |
| | PD3, PD4 | 6-8 | - | 60 | - | - | 1 | 2096 287 |
| | PD1, PD2 | 8 | - | 60 | - | - | 1 | 1887 920 |
| | | 8 | - | - | 60 | - | 1 | 1887 876 |
| | PC1, PC2, PC3 | 8 | - | - | - | 60 | 1 | 2097 533 |
| | Front Seat Back Cigar Lighter, PC3 4 D., Sp. 4 D. and Sub. | 8 | - | - | - | 60 | 1 | 2097 533 |
| | Swivel Seat Base Rear Cigar Lighter, PC3 | 8 | - | - | - | 60 | 1 | 2097 533 |
| | Rear Compartment Cigar Lighter, PC3 4 D., Sp. 4 D. and Sub. | 8 | - | - | - | 60 | 1 | 898 492 |
| | PY1 4 D. and Sp. 4 D. | 8 | - | - | - | 60 | 2 | 2097 533 |
| | Console Cigar Lighter, PC3-300 | 8 | - | - | - | 60 | 2 | 2097 533 |
| 8-20-9 | ELEMENT, Instrument Panel Cigar Lighter Heat, Cuno | 6-8 | 60 | 60 | 60 | 60 | 1 | 1692 678 |
| | Front Seat Back Cigar Lighter Heat, PC3 4 D., Sp. 4 D. and Sub., Cuno | 8 | - | - | - | 60 | 1 | 1692 678 |
| | Console Cigar Lighter Heat, PC3-300, Cuno | 8 | - | - | - | 60 | 2 | 1692 678 |
| | Swivel Seat Base Rear Cigar Lighter Heat, PC3, Cuno | 8 | - | - | - | 60 | 1 | 1692 678 |
| | Rear Compartment, Cuno, PC3 | 8 | - | - | - | 60 | ★ | 1689 041 |
| | Cuno, PY1 | 8 | - | - | - | 60 | ★ | 1692 678 |
| 8-20-10 | SHELL and CLAMP, Instrument Panel Cigar Lighter, PD1, PD2 | 6-8 | 60 | 60 | - | - | 1 | 2096 597 |
| | PD3, PD4 | 6-8 | - | 60 | 60 | 60 | 1 | 2096 599 |
| | Cuno | 8 | - | - | - | 60 | 1 | 1642 475 |
| | Front Seat Back Cigar Lighter, PC3 4 D., Sp. 4 D. and Sub., Cuno | 8 | - | - | - | 60 | 1 | 1642 475 |
| | Swivel Seat Base Rear Cigar Lighter, PC3, Cuno | 8 | - | - | - | 60 | 1 | 1642 475 |
| | Rear Compartment Cigar Lighter, PY1, Cuno. | 8 | - | - | - | 60 | 1 | 1642 475 |
| | Casco, PY1 | 8 | - | - | - | 60 | 2 | 2096 599 |
| | Instrument Panel Cigar Lighter, PY1 | 8 | - | - | - | 60 | 1 | 1752 403 |
| 8-20-12 | INSULATOR, Front Seat Back Cigar Lighter Terminal, PC3 4 D., Sp. 4 D. and Sub. | 8 | - | - | - | 60 | 1 | 1300 528 |
| | Rear Compartment Cigar Lighter Terminal, PY1 4 D. and Sp. 4 D. | 8 | - | - | - | 60 | 2 | 1300 528 |
| 8-20-16 | BEZEL, Instrument Panel Cigar Lighter | 6-8 | - | 60 | 60 | - | 1 | 1887 787 |
| | Swivel Seat Cigar Lighter, PC3 | 8 | - | - | - | 60 | 1 | 2080 996 |
| 8-20-17 | SCREW, Swivel Seat Back Lighter Cable Prop Shield, PC3 | 8 | - | - | - | 60 | 2 | 1901 691 |
| 8-20-20 | SOCKET and WIRE, Instrument Panel Cigar Lighter | 6-8 | 60 | 60 | - | - | 1 | 1770 756 |
| **8-21-0** | **TERMINAL BLOCK** | | | | | | | |
| 8-21-1 | BLOCK, Instrument Panel Terminal | 6-8 | - | 60 | 60 | - | 1 | 1885 637 |
| | Headlamp Terminal, PC1, PC2, PC3 | 8 | - | - | - | 60 | 1 | 913 297 |
| 8-21-11 | SCREW, Terminal Block Mounting | 6-8 | 60 | 60 | 60 | 60 | ★ | 6006 119 |
| **8-27-0** | **IGNITION DISTRIBUTOR** | | | | | | | |
| NOTE: | Use part no. stamped on Distributor for Complete replacement and ordering Component Parts. | | | | | | | |
| 8-27-1 | DISTRIBUTOR ASSEMBLIES, Chrysler Built | 6 | 60 | 60 | - | - | 1 | 2095 270 |
| | w/High Performance, w/o Ram Manifold, Double Breaker | 8 | 60 | 60 | 60 | - | 1 | 1889 570 |
| | w/Auto. Trans., PD4 | 8 | 60 | 60 | - | - | 1 | ⊟2196 320 |
| | w/Std. Trans., PD4 | 8 | 60 | 60 | - | - | 1 | 2095 199 |
| | w/Power Package | 8 | 60 | - | - | - | 1 | 2084 843 |
| | w/Power Package, Chrysler Built, w/318 cubic in. Eng. | 8 | 60 | - | - | - | 1 | *1889 710 |
| | w/Auto. Trans., Chrysler Built, PD4 | 8 | 60 | 60 | - | - | 1 | 1838 505 |
| | PD1-D500, PD2-D500, PD4-D500, w/Ram Manifold | 8 | 60 | 60 | 60 | - | 1 | 2095 065 |

★ Indicates use as required. Numerals in parentheses ( ) refer to notes. Printed in U.S.A.

⊟ Indicates parts not listed in any previous parts book. Prices and specifications subject to change without notice.



MyMopar.com

| CODE | PART NAME AND DESCRIPTION | NO. OF CYL. | PLYMOUTH | DODGE | DESOTO | CHRYSLER AND IMPERIAL | PER CAR | PART NUMBER |
|---|---|---|---|---|---|---|---|---|
| **8-27-0** | **IGNITION DISTRIBUTOR - Cont'd** | | | | | | | |
| 8-27-1 | DISTRIBUTOR ASSEMBLIES - Cont'd | | | | | | | |
| | w/High Performance, PD1, PS1 | 8 | - | 60 | 60 | - | 1 | 2095 054 |
| | PD1, PS1 | 8 | - | 60 | 60 | - | 1 | 1889 562 |
| | PD2, PS3 | 8 | - | 60 | 60 | - | 1 | 2095 054 |
| | w/Power Package, PD4 | 8 | - | 60 | - | - | 1 | 1889 560 |
| | w/High Performance, PD4 | 8 | - | 60 | - | - | 1 | 1889 562 |
| | Except PC3-300 | 8 | - | - | - | 60 | 1 | 1889 564 |
| | PC3-300 | 8 | - | - | - | 60 | 1 | 1889 568 |
| 8-27-320 | TUBE, Carburetor to Governor Vacuum Control, 3/16" O.D. | 6 | 60 | 60 | - | - | ★ | 861 540 |
| | 3/16" O. D. | 8 | 60 | 60 | 60 | 60 | ★ | *1843 251 |

FOR MODEL APPLICATION SEE CODE 8-27-1

| CODE | REMARKS | DISTRIBUTOR ASSEMBLIES 1838 505 | 2095 270 | ⊟2196 320 IBP-4003L | 1889 560 IBP-4003N | 1889 562 IBP-4005C | 1889 564 IBP-4006C | 1889 568 IBS-4011 |
|---|---|---|---|---|---|---|---|---|
| 8-27-4 | GASKET, Oil Retainer | 1326 836 | ---- --- | 1326 836 | 1326 836 | 1326 836 | 1326 836 | 1326 836 |
| | Retainer, to Cyl. Block | ---- --- | ⊟2095 740 | ---- --- | ---- --- | ---- --- | ---- --- | ---- --- |
| 8-27-18 | PACKAGE, Follower Gear. | ---- --- | ---- --- | ---- --- | ---- --- | ---- --- | ---- --- | 2084 870 |
| 8-27-26 | CLAMP | *1947 612 | ---- --- | 1326 835 | 1326 835 | 1737 760 | 1737 760 | 1737 760 |
| 8-27-27 | SCREW and WASHER, Clamp | 1675 958 | ---- --- | 1675 958 | 1675 958 | ---- --- | ---- --- | ---- --- |
| 8-27-71 | CAP | 1838 514 | 1889 424 | 2084 654 | 2084 654 | 2084 654 | 2084 654 | 2084 654 |
| 8-27-76 | SPRING, Cap Attaching | 1838 508 | 1838 508 | ---- --- | ---- --- | ---- --- | ---- --- | ---- --- |
| 8-27-77 | PACKAGE, Cap Clamp Spring Hinge | ---- --- | ---- --- | 1879 606 | 1879 606 | 1879 606 | 1879 606 | 1879 606 |
| 8-27-85 | PACKAGE, Cap Plunger Contact and Spring | ---- --- | ---- --- | 2084 655 | 2084 655 | 2084 655 | 2084 655 | 2084 655 |
| 8-27-100 | OILER, Base | ---- --- | 953 717 | 953 717 | 953 717 | 953 717 | 953 717 | 1879 391 |
| 8-27-114 | BEARING, Ball | ---- --- | ---- --- | ---- --- | ---- --- | 623 207 | ---- --- | 623 207 |
| 8-27-133 | PACKAGE, Drive Shaft Bearing | ---- --- | ---- --- | 1879 596 | 1879 596 | 1879 596 | 1879 596 | 2084 867 |
| | PACKAGE, Drive Shaft Bearing and Thrust Washer | 1881 947 | 1881 947 | ---- --- | ---- --- | ---- --- | ---- --- | ---- --- |
| 8-27-137 | PACKAGE, Drive Shaft Collar and Pin | 2084 448 | ---- --- | ---- --- | ---- --- | ---- --- | ---- --- | ---- --- |
| 8-27-138 | PLATE, Breaker, Assembly | ⊟2095 784 | 1889 428 | 1843 482 | 1843 482 | 1843 368 | 1843 368 | 1843 337 |
| 8-27-158 | CONTACT SET | 1838 643 | 1838 643 | 2084 078 | 2084 078 | 2084 079 | 2084 079 | 2084 080 |
| 8-27-190 | PACKAGE, Condenser and Mounting Bracket | 1818 757 | 1818 757 | 1818 757 | 1818 757 | 1818 757 | 1818 757 | 1818 757 |
| 8-27-205 | LEAD, Primary | ---- --- | 1889 788 | 1879 348 | ---- --- | 1818 730 | 1818 730 | 1383 958 |
| 8-27-207 | CABLE, Primary Lead | 1889 242 | ---- --- | ---- --- | ---- --- | ---- --- | ---- --- | ---- --- |
| 8-27-208 | PACKAGE, Breaker and Ground Lead | ---- --- | ---- --- | ---- --- | ---- --- | ---- --- | ---- --- | 1881 768 |
| 8-27-218 | PACKAGE, Terminal and Mounting Stud | ---- --- | ---- --- | ---- --- | ---- --- | ---- --- | ---- --- | 1881 751 |
| 8-27-250 | SHAFT, Governor and Cam, Distributor | *1889 683 | ---- --- | ---- --- | ---- --- | ---- --- | ---- --- | ---- --- |
| 8-27-278 | PACKAGE, Governor Weight | 1881 945 | 1881 945 | 1879 595 | 1879 595 | 1881 746 | 1881 746 | 1881 746 |
| 8-27-279 | SPRING SET, Governor Weight | 1881 946 | 2084 892 | 1879 310 | 1889 519 | 2084 657 | 1889 548 | 2084 866 |
| 8-27-297 | PACKAGE, Cam Sleeve Felt Disc and Snap Ring. | 1879 607 | 1879 607 | 1879 607 | 1879 607 | 1879 607 | 1879 607 | 1879 607 |
| 8-27-300 | ROTOR | 1838 516 | 1838 516 | 1658 535 | 1658 535 | 1658 535 | 1658 535 | 1658 535 |
| 8-27-308 | PACKAGE, Vacuum Chamber | 1881 944 | 2084 893 | 1881 752 | 1881 752 | 2084 888 | 2084 888 | 2084 868 |
| 8-27-315 | PACKAGE, Vacuum Chamber Plug and Gasket. | ---- --- | ---- --- | 1879 597 | 1879 597 | 1879 597 | 1879 597 | 1879 597 |
| 8-27-316 | PACKAGE, Vacuum Chamber Spring and Washer | ---- --- | ---- --- | *2084 083 | 2084 083 | 1881 747 | 1881 747 | 1881 766 |
| 8-27-352 | GEAR and PIN PACKAGE, Drive | ---- --- | 2084 653 | ---- --- | ---- --- | ---- --- | ---- --- | 2084 869 |

★ Indicates use as required. Numerals in parentheses ( ) refer to notes. Printed in U.S.A.
⊟ Indicates parts not listed in any previous parts book. Prices and specifications subject to change without notice.
* Indicates change or addition.



MyMopar.com

## 8-27-0 IGNITION DISTRIBUTOR - Cont'd

FOR MODEL APPLICATION SEE CODE 8-27-1

DISTRIBUTOR ASSEMBLIES

| CODE | REMARKS | 1889 570 IBS-4006D | 2084 843 IBP-4003PS | 2095 054 IBP-4005D | 2095 065 IBS-4006S | 2095 199 IBP-4003T |
|---|---|---|---|---|---|---|
| 8-27-4 | GASKET, Oil Retainer | 1326 836 | 1326 836 | 1326 836 | 1326 836 | 1326 836 |
| 8-27-26 | CLAMP | ---- --- | 1326 835 | 1737 760 | 1737 760 | 1326 835 |
| 8-27-27 | SCREW and WASHER, Clamp | ---- --- | 1675 958 | ---- --- | ---- --- | 1675 958 |
| 8-27-71 | CAP | 2084 654 | 2084 654 | 2084 654 | 2084 654 | 2084 654 |
| 8-27-77 | PACKAGE, Cap Clamp Spring and Hinge | 1879 606 | 1879 606 | 1879 606 | 1879 606 | 1879 606 |
| 8-27-85 | PACKAGE, Cap Plunger Contact and Spring | 2084 655 | ---- --- | 2084 655 | 2084 655 | 2084 655 |
| 8-27-100 | OILER, Base | 953 717 | 953 717 | 953 717 | 953 717 | 953 717 |
| 8-27-133 | PACKAGE, Drive Shaft Bearing | 1879 596 | 1879 596 | 1879 596 | 1879 596 | 1879 596 |
| 8-27-138 | PLATE, Breaker, Assembly | 1843 337 | 1843 482 | 1843 368 | 1843 337 | 1843 482 |
| 8-27-158 | CONTACT SET | 2084 080 | 2084 078 | 2084 079 | 2084 080 | 2084 078 |
| 8-27-190 | PACKAGE, Condenser and Mounting Bracket | 1818 757 | 1818 757 | 1818 757 | 1818 757 | 1818 757 |
| 8-27-205 | LEAD, Primary | 1383 958 | 1879 348 | 1818 730 | 1383 958 | 1879 348 |
| 8-27-208 | PACKAGE, Breaker and Ground Lead | 1881 768 | ---- --- | ---- --- | 1881 768 | ---- --- |
| 8-27-218 | PACKAGE, Terminal and Mounting Stud | 1881 751 | ---- --- | ---- --- | 1881 751 | ---- --- |
| 8-27-278 | PACKAGE, Governor Weight | 1881 746 | 1879 595 | 1881 746 | 1881 746 | 1879 595 |
| 8-27-279 | SPRING SET, Governor Weight | 2084 856 | 1889 538 | 2084 887 | 2084 866 | 2084 889 |
| 8-27-297 | PACKAGE, Cam Sleeve Felt Disc and Snap Ring | 1879 607 | 1879 607 | 1879 607 | 1879 607 | 1879 607 |
| 8-27-300 | ROTOR | 1658 535 | 1658 535 | 1658 535 | 1658 535 | 1658 535 |
| 8-27-308 | PACKAGE, Vacuum Chamber | 2084 857 | 1881 929 | 2084 888 | 2084 868 | 1881 752 |
| 8-27-315 | PACKAGE, Vacuum Chamber Plug and Gasket | 1879 597 | 1879 597 | 1879 597 | 1879 597 | 1879 597 |
| 8-27-316 | PACKAGE, Vacuum Chamber Spring and Washer | 1881 766 | 1881 742 | 1881 747 | 1881 766 | 2084 083 |

FOR MODEL APPLICATION SEE CODE 8-27-1

DISTRIBUTOR ASSEMBLIES

| CODE | REMARKS | *1889 710 |
|---|---|---|
| 8-27-4 | GASKET, Ignition Distributor | *1326 836 |
| 8-27-26 | CLAMP | *1737 760 |
| 8-27-71 | CAP | *1838 514 |
| 8-27-76 | SPRING, Cap Attaching | *1838 508 |
| 8-27-133 | BEARING and Thrust WASHER PACKAGE, Drive Shaft | *1881 947 |
| 8-27-137 | COLLAR and PIN PACKAGE, Drive Shaft | *2084 448 |
| 8-27-138 | PLATE, Breaker | ⊟2095 784 |
| 8-27-158 | CONTACT SET | *1838 643 |
| 8-27-190 | CONDENSER and BRACKET PACKAGE | *1818 757 |
| 8-27-207 | CABLE, Primary Lead | *1889 242 |
| 8-27-250 | SHAFT, Governor and Cam Distributor | *1889 684 |
| 8-27-278 | WEIGHT PACKAGE, Governor | *1881 945 |
| 8-27-279 | SPRING SET, Governor Weight | ⊟2084 891 |
| 8-27-297 | FELT DISC and SNAP RING, Cam Sleeve | *1889 607 |
| 8-27-300 | ROTOR | *1838 516 |
| 8-27-308 | VACUUM CHAMBER PACKAGE | *1881 948 |

★ Indicates use as required. Numerals in parentheses ( ) refer to notes. Printed in U.S.A.
⊟ Indicates parts not listed in any previous parts book. Prices and specifications subject to change without notice.



MyMopar.com

## 8-28-0 GENERATOR OR ALTERNATOR

NOTE: For Component Parts of Generators or Alternators see Part Type Code 8-29-0. Where Component Parts of a listed Generator or Alternator not shown please order by description. Production Assemblies are for Identification purposes only. Order Service Generators or Alternators.

| | Production Assemblies | | Amps | | Pulley No. | | Service Generator No. |
|---|---|---|---|---|---|---|---|
| 8-28-3 GENERATOR | | | | | | | |
| PP1, PD3 | 2095 418 | GJM-8203-S1 | 35 | S | 1842 521 | PU-1253 | 2095 417 |
| All, except PY1 w/Air Cond. and 6 Cyl. | 2095 074 | GJM-8201-S1 | 35 | S | 1842 521 | PU-1253 | 2095 070 |
| PP1, PP2, PD1, PD2, PD4 | 1770 601 | Bosch | 50 | S | 1770 602 | | 1704 294 |
| PP1, PD3 | 1753 670 | GGA-6001AC | 40 | S | 1889 372 | PU-244 | 1663 097 |
| PP1, PP2, PD3, PD4 | 1842 784 | GHM-8001B | 30 | S | 1842 777 | PU-1255 | 1842 785 |
| PP2, PD1, PD2, PD4, PS1, PS3, PC1 | 1770 740 | GGA-6007S1 | 40 | S | 1889 372 | PU-244 | 1770 739 |
| All, except PY1 w/Air Cond. and 6 Cyl. | 1842 603 | GGA-6003E | 40 | S | 1889 372 | PU-244 | 1658 861 |
| PP2 | 1841 509 | GGA-6007C | 40 | S | 1889 398 | PU-274 | 1770 739 |
| PP2, PS1, PS3, PC1, PC2, PC3 | 1842 778 | GHM-8005A | 30 | S | 1842 777 | PU-1255 | 1842 779 |
| PP2, PD4, PC1, w/Air Cond. | 1889 400 | GHM-8006B | 30 | S | 1842 777 | PU-1255 | 1842 791 |
| PD1, PD2, PD4, PS1, PS3 | 1842 772 | GHM-8002B | 30 | S | 1842 777 | PU-1255 | 1842 773 |
| PD1, PD2, PS1, w/Air Cond. | 1842 775 | GHM-8004A | 30 | S | 1842 777 | PU-1255 | 1842 776 |
| PS1, PS3, PC1, PC2, PC3, w/Air Cond. | 2095 075 | GJM-8202S1 | 35 | D | 1842 795 | PU-1256 | 2095 072 |
| PS1, PS3, PC1, PC2, PC3, w/Air Cond. | 1842 606 | GGA-6003F | 40 | D | 1889 373 | PU-248 | 1658 861 |
| PS3, PC2, PC3, w/Air Cond. | 1842 780 | GHM-8002A | 30 | D | 1842 781 | PU-1254 | 1842 773 |
| 8-28-3 ALTERNATOR | | | | | | | |
| PY1, w/Air Cond. | 2095 100 | | 40 | D | 2095 059 | | 2095 300 |

NOTE: Letters "S" and "D" in Pulley margins represent Single Groove and Double Groove.

### NOTES



MyMopar.com

## 8-28-0 GENERATOR OR ALTERNATOR - Cont'd

| CODE | PART NAME AND DESCRIPTION | NO. OF CYL. | PLYMOUTH | DODGE | DESOTO | CHRYSLER AND IMPERIAL | PER CAR | PART NUMBER |
|---|---|---|---|---|---|---|---|---|
| 8-28-14 | SPACER, Alternator Adjusting Strap to Alternator, w/Air Conditioning PY1 | 8 | - | - | - | 60 | 1 | ⊟1997 529 |
| 8-28-15 | STRAP, Generator Adjusting, w/30 and 40 amp. Generator | 6 | 60 | 60 | - | - | 1 | ⊟2128 566 |
| | w/35 amp. Generator | 6 | 60 | 60 | - | - | 1 | *1947 916 |
| | w/50 amp. Generator | 6 | 60 | 60 | - | - | 1 | ⊟2128 632 |
| | w/o High Performance, w/o Ram Manifold, w/35 amp. Generator, w/o Air Conditioning, PD4 | 8 | 60 | 60 | - | - | 1 | 1670 566 |
| | w/o High Performance, w/o Ram Manifold, w/50 amp. Generator, w/o Air Conditioning, PD4 | 8 | 60 | 60 | - | - | 1 | 1827 794 |
| | PP2, PD4, w/High Performance, w/Ram Manifold, PD1, PD2, PD4-D500, w/35 amp. Generator, w/o Air Conditioning | 8 | 60 | 60 | 60 | 60 | 1 | 1826 066 |
| | PP2, PD4, w/High Performance, w/Ram Manifold, PD1, PD2, PD4-D500, w/30 and 40 amp. Generator, w/o Air Conditioning | 8 | 60 | 60 | 60 | 60 | 1 | 1858 593 |
| | PP2, PD4, w/High Performance, w/Ram Manifold, PD1, PD2, PD4-D500, PC1, PC2, PC3, w/30 and 40 amp. Generator, w/Air Conditioning | 8 | 60 | 60 | 60 | 60 | 1 | 1947 735 |
| | PP2, PD4, w/361 and 383 cubic in. Eng., PD1, PD2, PC1, PC2, PC3, w/Air Conditioning, Model E | 8 | 60 | 60 | 60 | 60 | 1 | 1944 869 |
| 8-28-19 | SCREW, Generator Adjusting Strap | 6-8 | 60 | 60 | 60 | 60 | 1 | 1343 212 |
| 8-28-36 | BRACKET, Generator Mounting, w/30 amp. Generator | 6 | 60 | 60 | - | - | 1 | ⊟2128 565 |
| | w/35 amp. Generator | 6 | 60 | 60 | - | - | 1 | *2128 493 |
| | w/40 amp. Generator | 6 | 60 | 60 | - | - | 1 | ⊟2128 620 |
| | w/30 amp. Generator, w/318 cubic in. Eng., w/Air Conditioning, PD4 | 8 | 60 | 60 | - | - | 1 | *1859 576 |
| | w/40 amp. Generator, w/318 cubic in. Eng., w/Air Conditioning, PD4 | 8 | 60 | 60 | - | - | 1 | *1859 577 |
| | w/40 amp. Generator, except 318 cubic in. Eng., w/o Air Conditioning, PC1, PC2, PC3 | 8 | 60 | 60 | 60 | 60 | 1 | ⊟1945 398 |
| | w/30 amp. Generator, except 318 cubic in. Eng., w/o Air Conditioning, PC1, PC2, PC3 | 8 | 60 | 60 | 60 | 60 | 1 | ⊟1945 399 |
| | w/30 amp. Generator, except 318 cubic in. Eng., w/Air Conditioning, PC1, PC2, PC3 | 8 | 60 | 60 | 60 | 60 | 1 | ⊟1945 402 |
| | w/35 amp. Generator, except 318 cubic in. Eng., w/Air Conditioning, PC1, PC2, PC3 | 8 | 60 | 60 | 60 | 60 | 1 | ⊟1945 403 |
| | w/318 cubic in. Eng., w/Air Conditioning, PD4 | 8 | 60 | 60 | - | - | 1 | 1859 575 |
| | High Performance, w/Air Conditioning | 8 | 60 | 60 | 60 | - | 1 | 1944 850 |
| | PP2, PD4, w/High Performance, w/Ram Manifold, PD1, PD2, PD4-D500, w/35 amp. Generator, w/o Air Conditioning | 8 | 60 | 60 | 60 | 60 | 1 | 1826 059 |
| | w/o High Performance, w/o Ram Manifold, w/30 amp. Generator, w/o Air Conditioning, PD4 | 8 | 60 | 60 | - | - | 1 | 1735 850 |
| | w/o High Performance, w/o Ram Manifold, w/35 amp. Generator, w/o Air Conditioning, PD4 | 8 | 60 | 60 | - | - | 1 | 1731 467 |
| | w/o High Performance, w/o Ram Manifold, w/40 amp. Generator, w/o Air Conditioning, PD4 | 8 | 60 | 60 | - | - | 1 | 1735 849 |
| | w/o High Performance, w/o Ram Manifold, w/50 amp. Generator, w/o Air Conditioning, PD4 | 8 | 60 | 60 | - | - | 1 | 1827 772 |
| | Alternator Mounting, w/Air Conditioning, PY1 | 8 | - | - | - | 60 | 1 | ⊟1997 527 |



MyMopar.com

## 8-28-0 GENERATOR OR ALTERNATOR - Cont'd

| CODE | PART NAME AND DESCRIPTION | NO. OF CYL. | PLYMOUTH | DODGE | DESOTO | CHRYSLER AND IMPERIAL | PER CAR | PART NUMBER |
|---|---|---|---|---|---|---|---|---|
| 8-28-38 | SPACER, Alternator Mounting Bracket to spacer to head, w/Air Conditioning, PY1 | 8 | - | - | - | 60 | 1 | ⊟1997 528 |
| 8-28-51 | SUPPORT, Generator, PP2, PD4, w/High Performance, w/Ram Manifold, PD1, PD2, PD4-D500, 35 amp. Generator, w/o Air Conditioning, Long | 8 | 60 | 60 | 60 | - | 1 | 2120 612 |
| | Short | 8 | 60 | 60 | 60 | - | 1 | 1859 324 |
| | w/35 amp. Generator, w/o Air Conditioning, Long | 8 | - | - | - | 60 | 1 | 2120 610 |
| | Short | 8 | - | - | - | 60 | 1 | 1945 277 |
| | w/30 and 40 amp. Generator, w/o Air Conditioning, Long | 8 | - | - | - | 60 | 1 | 2120 613 |
| | Short | 8 | - | - | - | 60 | 1 | 1946 918 |
| 8-28-74 | REGULATOR, Generator, 30 amp., PC1, PC2, PC3 | 6-8 | 60 | 60 | 60 | 60 | 1 | ⊟2095 341 |
| | 35 amp. | 6-8 | 60 | 60 | 60 | 60 | 1 | 1889 944 |
| | 40 amp. | 6-8 | 60 | 60 | 60 | 60 | 1 | 1662 137 |
| | 50 amp., Bosch, PD1, PD2, PD4 | 6-8 | 60 | 60 | - | - | 1 | 1704 295 |
| | REGULATOR, Alternator, 40 amp., PY1 | 8 | - | - | - | 60 | 1 | 1889 960 |
| 8-28-75 | SCREW, Generator Regulator | 6-8 | 60 | 60 | - | - | ★ | 6006 122 |
| 8-28-88 | CLAMP, Regulator Terminal | 6-8 | 60 | 60 | 60 | 60 | 3 | 1779 986 |
| 8-28-282 | PULLEY, Jackshaft | 6 | 60 | 60 | - | - | 1 | *1403 997 |
| | w/318 cubic in. Eng., PD4 | 8 | 60 | 60 | - | - | 1 | *1859 952 |
| | PP2 w/361 and 383 cubic in. Eng., PD1, PD2, PD4 w/361 and 383 cubic in. Eng. | 8 | 60 | 60 | 60 | 60 | 1 | 1944 844 |
| 8-28-283 | BRACKET, Jackshaft Pulley | 6 | 60 | 60 | - | - | 1 | ⊟1991 606 |
| | w/318 cubic in. Eng., PD4 | 8 | 60 | 60 | - | - | 1 | *1859 583 |
| | PP2 w/361 and 383 cubic in. Eng., PD1, PD2, PD4 w/361 and 383 cubic in. Eng. | 8 | 60 | 60 | 60 | 60 | 1 | 1944 845 |
| | Bracket Spacer, w/318 cubic in. Eng., PD4 | 8 | 60 | 60 | - | - | 1 | 1945 384 |
| 8-28-284 | SUPPORT, Compressor and Jackshaft Bracket, PP2 w/361 and 383 cubic in. Eng., PD1, PD2, PD4 w/361 and 383 cubic in. Eng. | 8 | 60 | 60 | - | - | 1 | 1991 620 |
| | | 8 | - | - | 60 | 60 | 1 | 1991 621 |
| 8-28-285 | SPACER, Jackshaft Pulley to Bracket | 6 | 60 | 60 | - | - | 1 | ⊟1993 695 |
| | w/318 cubic in. Eng., PD4 | 8 | 60 | 60 | - | - | 1 | *1859 578 |
| 8-28-288 | SLEEVE, Compressor and Jackshaft Pulley to Bracket, w/318 cubic in. Eng., PD4 | 8 | 60 | 60 | - | - | 1 | 1859 589 |
| | PP2 w/361 and 383 cubic in. Eng., PD1, PD2, PD4 w/361 and 383 cubic in. Eng. | 8 | 60 | 60 | 60 | 60 | 1 | 1944 847 |
| 8-28-289 | SCREW, Water Pump Body Air Conditioning Jackshaft Pulley Bracket Spacer, w/318 cubic in. Eng., PD4 | 8 | 60 | 60 | - | - | 1 | *1851 371 |
| 8-28-299 | FAN, Generator | 6-8 | 60 | 60 | 60 | 60 | 1 | 1889 371 |
| 8-28-302 | PULLEY, Generator Drive Pulley, PD4 | 8 | 60 | 60 | - | - | 1 | 1821 337 |

★ Indicates use as required. Numerals in parentheses ( ) refer to notes. Printed in U.S.A.
⊟ Indicates parts not listed in any previous parts book. Prices and specifications subject to change without notice.
* Indicates change or addition.



MyMopar.com

## 8-29-0 GENERATOR OR ALTERNATOR COMPONENT PARTS

FOR MODEL APPLICATION SEE CODE 8-28-3

| CODE | REMARKS | GENERATOR ASSEMBLIES 1658 861 GGA-6003S1 | 1663 097 GGA-6009NS1 | 1770 739 GGA-6007S1 | 1842 773 GHM-8002S1 | 1842 776 GHM-8004S1 |
|---|---|---|---|---|---|---|
| 8-29-1 | ARMATURE | 1391 249 | 1391 249 | 1391 249 | 1879 568 | 1889 350 |
| 8-29-2 | NUT, Armature Shaft | 40 654 | 40 654 | 40 654 | ---- --- | ---- --- |
| 8-29-12 | SPACER, Armature Shaft | 1253 336 | 1253 336 | 1253 336 | ---- --- | ---- --- |
| 8-29-13 | PACKAGE, Arm Shaft Nut and Lockwasher | 1881 722 | 1881 722 | 1881 722 | ---- --- | ---- --- |
| 8-29-14 | PACKAGE, Armature Terminal Stud and Mounting | 1881 744 | 1881 744 | 1881 744 | 1881 740 | 1881 740 |
| 8-29-17 | BRUSH SET | 960 544 | 960 544 | 960 544 | 1843 156 | 1843 156 |
| 8-29-19 | PACKAGE, Brush Arm and Spring | 1881 745 | 1881 745 | 1881 745 | 1881 741 | 1881 741 |
| 8-29-20 | SPRING, Brush | 960 173 | 960 173 | 960 173 | 671 490 | 671 490 |
| 8-29-21 | ARM, Brush | 674 936 | 674 936 | 674 936 | 673 014 | 673 014 |
| 8-29-100 | HEAD, Commutator End, Assembly | 1501 791 | 1501 791 | 1501 791 | 1495 553 | 1495 542 |
| 8-29-146 | HEAD, Drive End, Assembly | 1571 464 | 1253 338 | 1818 749 | 1889 351 | 1879 569 |
| 8-29-154 | BEARING, Drive End Head Ball | 965 325 | 965 325 | 965 325 | 1889 235 | 1889 235 |
| | BEARING, Commutator End Head Ball | 1202 829 | 1202 829 | 1202 829 | 602 454 | 1402 563 |
| 8-29-172 | COIL, Field, Complete, Assembly | 1391 246 | 1391 246 | 1391 246 | ---- --- | ---- --- |
| 8-29-173 | COIL, Field, Right | ---- --- | ---- --- | ---- --- | 1499 172 | 1499 172 |
| 8-29-174 | COIL, Field, Left | ---- --- | ---- --- | ---- --- | 1499 171 | 1499 171 |
| 8-29-193 | PACKAGE, Field Terminal Stud and Mounting | 1881 743 | 1881 743 | 1881 743 | 1881 719 | 1881 719 |
| 8-29-208 | BOLT, Thru | 1253 327 | 1253 327 | 1253 327 | 1253 343 | 1253 343 |
| 8-29-312 | STUD, Armature Terminal | 1267 793 | 1267 793 | 1267 793 | ---- --- | ---- --- |
| 8-29-313 | STUD, Field Terminal | 953 732 | 953 732 | 953 732 | 1253 348 | 1253 348 |
| 8-29-320 | INSULATION, Terminal Stud Inner | 1253 332 | 1253 332 | 1253 332 | ---- --- | ---- --- |
| 8-29-323 | BUSHING, Armature Terminal Stud Insulating | 960 162 | 960 162 | 960 162 | ---- --- | ---- --- |
| 8-29-325 | BUSHING, Field Terminal Insulating | 960 161 | 960 161 | 960 161 | ---- --- | ---- --- |
| 8-29-327 | WASHER, Armature Terminal Insulating | 671 477 | 671 477 | 671 477 | 1138 481 | 1138 481 |
| | WASHER, Field Terminal Insulating | 671 481 | 671 481 | 671 481 | 1253 344 | 1253 344 |

## NOTES



MyMopar.com

## 8-29-0 GENERATOR OR ALTERNATOR COMPONENT PARTS - Cont'd

FOR MODEL APPLICATION SEE CODE 8-28-3

| CODE | REMARKS | GENERATOR ASSEMBLIES 1842 779 GHM-8005S1 | 1842 785 GHM-8001S1 | 1842 791 GHM-8006S1 | 2095 072 GJM-8202S1 | 2095 070 GJM-8201S1 |
|---|---|---|---|---|---|---|
| 8-29-1 | ARMATURE | 1889 350 | 1879 568 | 1889 350 | 1889 353 | 1879 571 |
| 8-29-14 | PACKAGE, Armature Terminal Stud and Mounting | 1881 740 | 1881 740 | 1881 740 | ---- --- | ---- --- |
| 8-29-17 | BRUSH SET | 1843 156 | 1843 156 | 1843 156 | 1843 156 | 1843 156 |
| 8-29-19 | PACKAGE, Brush Arm and Spring | 1881 741 | 1881 741 | 1881 741 | 1881 721 | 1881 721 |
| 8-29-20 | SPRING, Brush | 671 490 | 671 490 | 671 490 | ---- --- | ---- --- |
| 8-29-21 | ARM, Brush | 673 014 | 673 014 | 673 014 | ---- --- | ---- --- |
| 8-29-41 | PACKAGE, Brush Holder and Terminal | ---- --- | ---- --- | ---- --- | 2084 854 | 2084 854 |
| 8-29-100 | HEAD, Commutator End, Assembly | 1495 542 | 1495 553 | 1495 542 | 2084 855 | 2084 861 |
| 8-29-146 | HEAD, Drive End, Assembly | 1889 351 | 1879 569 | 1889 349 | 2084 852 | 2084 852 |
| 8-29-154 | BEARING, Drive End Head Ball | 1889 235 | 602 454 | 602 454 | 1889 235 | 1889 235 |
| | BEARING, Commutator End Head Ball | 1402 563 | 602 454 | 1402 563 | 602 454 | 2084 265 |
| 8-29-172 | COIL, Field, Complete, Assembly | ---- --- | ---- --- | ---- --- | 2084 860 | 2084 860 |
| 8-29-173 | COIL, Field, Right | 1499 172 | 1499 172 | 1499 172 | ---- --- | ---- --- |
| 8-29-174 | COIL, Field, Left | 1499 171 | 1499 171 | 1499 171 | ---- --- | ---- --- |
| 8-29-193 | PACKAGE, Field Terminal Stud and Mounting | 1881 719 | 1881 719 | 1881 719 | 2084 853 | 2084 853 |
| 8-29-208 | BOLT, Thru | 1253 343 | 1253 343 | 1253 343 | 673 009 | ---- --- |
| 8-29-313 | STUD, Field Terminal | 1253 348 | 1253 348 | 1253 348 | ---- --- | ---- --- |
| 8-29-323 | BUSHING, Armature Terminal Stud Insulating | 1253 346 | 1253 346 | 1253 346 | ---- --- | ---- --- |
| 8-29-325 | BUSHING, Field Terminal Insulating | 1253 346 | 1253 346 | 1253 346 | ---- --- | ---- --- |
| 8-29-327 | WASHER, Armature Terminal Insulating | 1138 481 | 1138 481 | 1138 481 | ---- --- | ---- --- |
| | WASHER, Field Terminal Insulating | 1253 344 | 1253 344 | 1253 344 | ---- --- | ---- --- |

FOR MODEL APPLICATION SEE CODE 8-28-3

| | GENERATOR ASSEMBLIES | 2095 417 GJM-8203-S1 |
|---|---|---|
| 8-29-1 | ARMATURE | 1879 571 |
| 8-29-17 | BRUSH SET | 1843 156 |
| 8-29-19 | ARM and SPRING PACKAGE, Brush | 1881 721 |
| 8-29-41 | HOLDER and TERMINAL PACKAGE, Brush | 2084 854 |
| 8-29-100 | HEAD, Commutator | 2240 251 |
| 8-29-146 | HEAD, Drive End | 2084 852 |
| 8-29-154 | BEARING, Commutator End Bronze | 2084 265 |
| | BEARING, Drive End Ball | 1889 235 |
| 8-29-172 | COIL, Field, Complete | 2084 860 |
| 8-29-193 | STUD PACKAGE, Field Terminal | 2084 853 |
| 8-29-208 | BOLT, Thru | 671 487 |

FOR MODEL APPLICATION SEE CODE 8-28-3

| | ALTERNATOR ASSEMBLIES | 2095 300 |
|---|---|---|
| 8-29-17 | BRUSH SET | 2084 673 |
| 8-29-42 | HOLDER, Brush | 2095 038 |
| 8-29-97 | ROTOR | 2095 013 |
| 8-29-98 | STATOR | ⊟2095 427 |

★ Indicates use as required.
⊟ Indicates parts not listed in any previous parts book.
* Indicates change or addition.

Numerals in parentheses ( ) refer to notes.



Printed in U.S.A.
Prices and specifications subject to change without notice.
Dec. 9, 1960 Supersedes April 20, 1960.
MyMopar.com

## 8-29-0 GENERATOR OR ALTERNATOR COMPONENT PARTS - Cont'd

FOR MODEL APPLICATION SEE CODE 8-28-3

ALTERNATOR ASSEMBLIES 2095 300

| | | |
|---|---|---|
| 8-29-129 | CAPACITOR and BOLT PACKAGE | 2084 675 |
| 8-29-130 | SCREW, Rectifier End Shield Ground | ⊟6022 381 |
| 8-29-131 | RECTIFIER, Positive | 2095 331 |
| | RECTIFIER, Negative | 2095 332 |
| 8-29-132 | SHIELD, Rectifier End | 2095 339 |
| 8-29-133 | BEARING, Rectifier End Shield | 2095 037 |
| 8-29-135 | HEAT SINK PACKAGE, Rectifier | 2084 674 |
| 8-29-136 | INSULATOR, Rectifier Heat Sink | 2095 241 |
| 8-29-153 | SHIELD, Drive End | 2095 008 |
| 8-29-154 | BEARING, Drive End Shield Ball | ⊟2095 653 |
| 8-29-155 | RETAINER, Drive End Shield Bearing | 2095 182 |
| 8-29-194 | SCREW, Insulator Brush Mounting | ⊟6022 377 |
| 8-29-208 | SCREW, Frame | 2095 004 |

| CODE | PART NAME AND DESCRIPTION | NO. OF CYL. | PLYMOUTH | DODGE | DESOTO | CHRYSLER AND IMPERIAL | PER CAR | PART NUMBER |
|---|---|---|---|---|---|---|---|---|
| **8-30-0** | **GROMMETS** | | | | | | | |
| 8-30-1 | GROMMET, Wiring Dash Slot, 1/2" thk. | 6-8 | 60 | 60 | 60 | 60 | 1 | 2097 813 |
| | 3/4" thk. | 6-8 | 60 | 60 | 60 | 60 | 1 | 2097 814 |
| | Speedometer Cable, 3/8" thk. | 6-8 | 60 | 60 | 60 | 60 | 1 | 2097 816 |
| | Chassis Wiring Headlamp Plug, PC1, PC2, PC3 | 6-8 | - | 60 | 60 | 60 | 2 | 2097 303 |
| | Gearshift Control Cable Dash, PY1 | 8 | - | - | - | 60 | 1 | 1370 460 |
| | Back-Up Lamp Wiring, PY1 | 8 | - | - | - | 60 | 2 | 1838 986 |
| | License Lamp Cable, PY1 | 8 | - | - | - | 60 | 1 | 1838 986 |
| **8-31-0** | **HAND BRAKE SIGNAL LAMP** | | | | | | | |
| 8-31-2 | LAMP, Hand Brake Signal, Factory Installation | 6-8 | - | 60 | 60 | - | 1 | *2096 526 |
| | Field Installation | 6-8 | - | 60 | 60 | - | 1 | 2096 529 |
| 8-31-3 | FLASHER, Hand Brake and Speed Warning Signal Lamp, PY1 | 8 | - | - | - | 60 | 1 | 1971 896 |
| 8-31-10 | SWITCH, Hand Brake Signal Lamp, PC1, PC2, PC3 | 6-8 | 60 | 60 | 60 | 60 | 1 | 1971 931 |
| | PY1 | 8 | - | - | - | 60 | 1 | 2097 279 |
| 8-31-11 | BRACKET, Parking Brake Signal Lamp Switch, PC1, PC2, PC3 | 6-8 | 60 | 60 | 60 | 60 | 1 | ⊟2096 396 |
| 8-31-16 | SOCKET, Parking Brake Signal Lamp | 6-8 | 60 | - | - | - | 1 | 1314 619 |
| | | 6-8 | - | 60 | 60 | - | 1 | 1658 830 |
| | PC1, PC2, PC3 | 8 | - | - | - | 60 | 1 | 1753 632 |
| **8-32-0** | **HORNS** | | | | | | | |
| 8-32-2 | HORN, High Note, Sea Shell | 6-8 | 60 | - | 60 | 60 | 1 | 2097 950 |
| | Low Note, Sea Shell | 6-8 | 60 | - | 60 | 60 | 1 | 2097 951 |
| | High Note, Sparton | 6-8 | - | 60 | - | - | 1 | 2097 898 |
| | Low Note, Sparton | 6-8 | - | 60 | - | - | 1 | 2097 899 |
| | Trumpet Type, A.L., PY1 | 8 | - | - | - | 60 | 1 | 2097 774 |
| 8-32-15 | BRACKET, Horn Mounting, A.L., Right, PC1 | 6-8 | 60 | - | 60 | 60 | 1 | ⊟1971 428 |
| | Left, PC1 | 6-8 | 60 | - | 60 | 60 | 1 | ⊟1971 429 |
| | Horn Mounting, Right | 6-8 | - | 60 | - | - | 1 | ⊟1972 868 |
| | Left | 6-8 | - | 60 | - | - | 1 | ⊟1972 869 |
| | Horn Mounting, used with A.L. and Sparton Type Horns, Right, PC2, PC3, PY1 | 8 | - | - | - | 60 | 1 | *1971 362 |
| | Left | 8 | - | - | - | 60 | 1 | 1971 363 |
| | Used w/Trumpet Type Horns, PY1 | 8 | - | - | - | 60 | 1 | 1972 461 |
| 8-32-108 | ADAPTER, Horn Terminal, PY1 | 8 | - | - | - | 60 | 2 | 1753 085 |

★ Indicates use as required. Numerals in parentheses ( ) refer to notes. Printed in U.S.A.
⊟ Indicates parts not listed in any previous parts book. Prices and specifications subject to change without notice.
Dec. 9, 1960 Supersedes April 20, 1960. Page 8-28 * Indicates change or addition.

MyMopar.com

| CODE | PART NAME AND DESCRIPTION | NO. OF CYL. | PLYMOUTH | DODGE | DESOTO | CHRYSLER AND IMPERIAL | PER CAR | PART NUMBER |
|---|---|---|---|---|---|---|---|---|
| **8-33-0** | **HORN CONTROL** | | | | | | | |
| 8-33-4 | RING, Steering Wheel Horn, w/ORNAMENT, PP1M, H, PP2M, H | 6-8 | 60 | - | - | - | 1 | 1948 659 |
| | BAR, w/ORNAMENT, PP1L, PP2L | 6-8 | 60 | - | - | - | 1 | 1948 685 |
| | BAR, w/o Ornament, w/Plastic Wheel | 6-8 | 60 | - | - | - | 1 | 1946 552 |
| | RING, w/Std. Trans. | 6-8 | - | 60 | - | - | 1 | 2122 668 |
| | BAR, w/Auto. Trans., Beige, w/o Power Steering | 6-8 | - | 60 | - | - | 1 | 2122 969 |
| | BAR, w/Auto. Trans., Beige, w/Power Steering | 6-8 | - | 60 | - | - | 1 | 2122 972 |
| | w/Std. Trans., w/Rubber Wheel, PS1 | 8 | - | - | 60 | - | 1 | 1943 626 |
| | RING, w/ORNAMENT, w/Auto. Trans., w/Plastic Wheel | 8 | - | - | 60 | - | 1 | 2122 635 |
| | RING, w/Rubber Wheel, PC1, PC2 | 8 | - | - | - | 60 | 1 | 1945 920 |
| | BAR, w/Plastic Wheel, PC1, PC2, PC3 | 8 | - | - | - | 60 | 1 | 1945 919 |
| | RING, PY1 | 8 | - | - | - | 60 | 1 | 2122 055 |
| 8-33-5 | RETAINER, Horn Ring | 6-8 | 60 | - | - | - | 1 | 1856 318 |
| | w/Plastic Oval Wheel | 6-8 | 60 | - | - | - | 1 | 1946 556 |
| | w/Std. Trans. | 6-8 | - | 60 | - | - | 1 | 1940 512 |
| | w/Auto. Trans. | 6-8 | - | 60 | - | - | 1 | 1948 674 |
| | w/Auto. Trans., w/Deep Plastic Wheel | 8 | - | - | 60 | - | 1 | 2122 029 |
| 8-33-6 | ORNAMENT, Horn Ring, w/Plastic Oval Wheel | 6-8 | 60 | - | - | - | 1 | ⊟1948 658 |
| | Horn Ring, w/Auto Trans. | 6-8 | - | 60 | - | - | 1 | *1948 682 |
| | w/Std. Trans., w/Rubber Wheel, PS1 | 8 | - | - | 60 | - | 1 | 1940 857 |
| | PC1, PC2 | 8 | - | - | - | 60 | 1 | 1945 924 |
| | PC3 | 8 | - | - | - | 60 | 1 | 1945 923 |
| | PC3-300 | 8 | - | - | - | 60 | 1 | 1945 922 |
| 8-33-19 | BASE, Horn Ring | 6-8 | 60 | - | - | - | 1 | 1946 555 |
| | w/Auto. Trans. | 6-8 | - | 60 | - | - | 1 | 1948 675 |
| | w/Std. Trans., PS1 | 8 | - | - | 60 | - | 1 | 1613 090 |
| | w/Auto. Trans. | 8 | - | - | 60 | - | 1 | 2122 031 |
| | Mounting, PY1 | 8 | - | - | - | 60 | 1 | 1730 978 |
| 8-33-20 | PLATE, Horn Ring Mounting, w/Auto. Trans., w/Plastic Wheel | 8 | - | - | 60 | - | 1 | 2122 030 |
| 8-33-39 | BUSHING, Horn Bar Spacer | 6-8 | 60 | 60 | 60 | 60 | ★ | ⊟2240 608 |
| 8-33-40 | SCREW, Horn Bar Spacer Bushing | 6-8 | 60 | 60 | 60 | 60 | ★ | 1325 906 |
| 8-33-90 | SWITCH, Horn, w/Plastic Wheel | 6-8 | 60 | - | - | - | 1 | 1971 940 |
| | w/Rubber Wheel | 6-8 | 60 | - | - | - | 1 | 1972 391 |
| | w/Std. Trans., PD1, PD3, PD4 | 6-8 | - | 60 | - | - | 1 | 1972 391 |
| | w/Auto. Trans. | 6-8 | - | 60 | - | - | 1 | 1971 940 |
| | PC1, PC2, PC3 | 8 | - | - | - | 60 | 1 | 1972 391 |
| | PY1 | 8 | - | - | - | 60 | 1 | 1704 689 |
| 8-33-118 | CONTACT, Turn Signal Switch Horn | 6-8 | 60 | 60 | 60 | 60 | 1 | 1604 921 |
| 8-33-120 | SLEEVE, Horn Contact and Turn Signal Cancelling Switch Actuating | 8 | - | - | - | 60 | 1 | 1770 498 |
| 8-33-121 | RING and Feed CABLE, Horn Contact | 6-8 | 60 | 60 | 60 | - | 1 | 1972 250 |
| | PC2, PC3 | 8 | - | - | - | 60 | 1 | 1819 841 |
| 8-33-164 | RELAY, Horn | 6-8 | 60 | - | - | - | 1 | 2196 312 |
| | | 6-8 | - | 60 | 60 | 60 | 1 | 2084 423 |
| **8-34-0** | **HEADLAMP** | | | | | | | |
| 8-34-1 | HEADLAMP, Dual, Riteway Shift, Right | 6-8 | 60 | - | - | - | 1 | 1972 430 |
| | Left | 6-8 | 60 | - | - | - | 1 | 1972 431 |
| | Right, Riteway Shift, Two Headlamp Operating, Export | 6-8 | 60 | - | - | - | 1 | 1972 442 |
| | Left | 6-8 | 60 | - | - | - | 1 | 1972 443 |
| | Right, Left Shift, Export | 6-8 | 60 | - | - | - | 1 | 1972 432 |
| | Left | 6-8 | 60 | - | - | - | 1 | 1972 433 |
| | Right, Leftway Shift, Two Headlamp Operating, Export | 6-8 | 60 | - | - | - | 1 | 1972 444 |
| | Left | 6-8 | 60 | - | - | - | 1 | 1972 445 |
| | Right, High and Low Beam, Riteway Shift | 6-8 | - | 60 | - | - | 1 | 1887 128 |
| | Left | 6-8 | - | 60 | - | - | 1 | 1887 129 |
| | Right, High and Low Beam, Leftway Shift, Two Headlamp Operating, Export | 6-8 | - | 60 | - | - | 1 | 1887 126 |
| | Left | 6-8 | - | 60 | - | - | 1 | 1887 127 |



MyMopar.com

| CODE | PART NAME AND DESCRIPTION | NO. OF CYL. | PLYMOUTH | DODGE | DESOTO | CHRYSLER AND IMPERIAL | PER CAR | PART NUMBER |
|---|---|---|---|---|---|---|---|---|
| **8-34-0** | **HEADLAMP - Cont'd** | | | | | | | |
| 8-34-1 | HEADLAMP - Cont'd | | | | | | | |
| | Right, High Beam, Two Headlamp Operating, Export | 6-8 | - | 60 | - | - | 1 | 1887 218 |
| | Left | 6-8 | - | 60 | - | - | 1 | 1887 219 |
| | Right, High Beam | 6-8 | - | 60 | - | - | 1 | 1887 220 |
| | Left | 6-8 | - | 60 | - | - | 1 | 1887 221 |
| | Right, High and Low Beam, Two Headlamp Operating Leftway Shift, Export, PC1, PC2, PC3 | 8 | - | - | 60 | 60 | 1 | 1887 214 |
| | Left | 8 | - | - | 60 | 60 | 1 | 1887 215 |
| | Right, High and Low Beam, Riteway Shift, PC1, PC2, PC3 | 8 | - | - | 60 | 60 | 1 | 1887 216 |
| | Left | 8 | - | - | 60 | 60 | 1 | 1887 217 |
| | Right, High Beam, PC1, PC2, PC3 | 8 | - | - | 60 | 60 | 1 | 1887 212 |
| | Left | 8 | - | - | 60 | 60 | 1 | 1887 213 |
| | Right, High Beam, Two Headlamp Operating, Export, PC1, PC2, PC3 | 8 | - | - | 60 | 60 | 1 | 1887 210 |
| | Left | 8 | - | - | 60 | 60 | 1 | 1887 211 |
| | Right, High Beam, Two Headlamp Operating, Export, PY1 | 8 | - | - | - | 60 | 1 | 1887 980 |
| | Left | 8 | - | - | - | 60 | 1 | 1887 981 |
| | Right, High and Low Beam, Two Headlamps Operating, Leftway Shift, Export, PY1 | 8 | - | - | - | 60 | 1 | 1887 970 |
| | Left | 8 | - | - | - | 60 | 1 | 1887 971 |
| | Right, High and Low Beam, Riteway Shift, PY1 | 8 | - | - | - | 60 | 1 | 1887 972 |
| | Left | 8 | - | - | - | 60 | 1 | 1887 973 |
| | Right, High Beam, PY1 | 8 | - | - | - | 60 | 1 | 1887 982 |
| | Left | 8 | - | - | - | 60 | 1 | 1887 983 |
| 8-34-40 | DOOR, Radiator Grille Headlamp | 6-8 | 60 | - | - | - | 4 | 1863 842 |
| | Dual Headlamp, Right, PD1, PD3, PD4 | 6-8 | - | 60 | - | - | 1 | 1903 142 |
| | Left, PD1, PD3, PD4 | 6-8 | - | 60 | - | - | 1 | 1903 143 |
| | Right, PD2 | 8 | - | 60 | - | - | 1 | 1903 616 |
| | Left, PD2 | 8 | - | 60 | - | - | 1 | 1903 617 |
| | Right | 8 | - | - | 60 | - | 1 | 1903 766 |
| | Left | 8 | - | - | 60 | - | 1 | 1903 767 |
| | Right, PC1, PC2, PC3 | 8 | - | - | - | 60 | 1 | 1863 752 |
| | Left, PC1, PC2, PC3 | 8 | - | - | - | 60 | 1 | 1863 753 |
| | Front Fender Headlamp, Right, PY1 | 8 | - | - | - | 60 | 1 | 1863 236 |
| | Left, PY1 | 8 | - | - | - | 60 | 1 | 1863 237 |
| 8-34-51 | NUT, Headlamp Door to Headlamp Plate Bracket | 6-8 | - | 60 | - | - | 1 | 6010 231 |
| | Headlamp Door to Headlamp, PC1, PC2, PC3 | 8 | - | - | 60 | 60 | 4 | 6010 154 |
| | Headlamp Door to Headlamp Plate, PC1, PC2, PC3 | 8 | - | - | 60 | 60 | 2 | 6010 154 |
| | Headlamp Plate Door Attaching, PC1, PC2, PC3 | 8 | - | - | 60 | 60 | 6 | 6010 154 |
| 8-34-96 | SCREW, Headlamp Door to Headlamp, PC1, PC2, PC3 | 8 | - | - | 60 | 60 | 4 | 6010 096 |
| | Headlamp Door to Headlamp Plate, PC1, PC2, PC3 | 8 | - | - | 60 | 60 | 2 | 6010 096 |
| | Headlamp Plate Door Attaching, PC1, PC2, PC3 | 8 | - | - | 60 | 60 | 6 | 6010 096 |
| 8-34-175 | UNIT, Dual Headlamp Sealed Beam Riteway Shift, High-Low Beam | 6-8 | 60 | 60 | 60 | 60 | 2 | 1753 436 |
| | UNIT, Dual Headlamp Sealed Beam, High Beam | 6-8 | 60 | 60 | 60 | 60 | 2 | 1753 435 |
| | UNIT, Dual Headlamp Sealed Bear, Left Shift, High-Low Beam, Export | 6-8 | 60 | 60 | 60 | 60 | 2 | 1841 775 |
| | UNIT, Dual Headlamp Sealed Beam, High Beam, two Headlamp Operating, Export | 6-8 | 60 | 60 | 60 | 60 | 2 | 1842 211 |



MyMopar.com

| CODE | PART NAME AND DESCRIPTION | NO. OF CYL. | PLYMOUTH | DODGE | DESOTO | CHRYSLER AND IMPERIAL | PER CAR | PART NUMBER |
|---|---|---|---|---|---|---|---|---|
| **8-34-0** | **HEADLAMP - Cont'd** | | | | | | | |
| 8-34-177 | SPRING, Dual Headlamp Bulb Mounting Seat Adjusting | 6-8 | 60 | 60 | 60 | 60 | 4 | 1972 972 |
| 8-34-178 | SCREW, Dual Headlamp Bulb Mounting Seat Adjusting | 6-8 | 60 | 60 | 60 | 60 | 8 | 2096 127 |
| 8-34-180 | RING and LUGS, Dual Headlamp Bulb Retainer | 6-8 | 60 | 60 | 60 | 60 | 4 | 1779 406 |
| 8-34-220 | GROMMET, Terminal and Lead Cable, Headlamp, PC1, PC2, PC3 | 6-8 | - | 60 | 60 | 60 | ★ | 2097 303 |
| **8-35-0** | **IGNITION COIL, SWITCH AND LOCK CYLINDER** | | | | | | | |
| 8-35-4 | COIL, Ignition | 6-8 | 60 | 60 | 60 | 60 | 1 | 2084 847 |
| 8-35-22 | RESISTOR, Ignition Coil Primary | 6-8 | 60 | 60 | 60 | 60 | 1 | 2196 316 |
| 8-35-32 | SCREW, Ignition Coil Primary Resistor Mounting on Dash, PY1 | 8 | - | - | - | 60 | 1 | 6006 119 |
| 8-35-41 | BRACKET, Ignition Coil Mounting, on Coil, PP1, PD1, PD2, PD3 | 6-8 | 60 | 60 | 60 | 60 | 1 | 1688 207 |
| | | 6 | 60 | 60 | - | - | 1 | 2128 655 |
| | PP2, PD4 | 8 | 60 | 60 | - | - | 1 | 2095 374 |
| 8-35-44 | SPACER, Intake Manifold Coil Bracket, PD4 | 8 | 60 | 60 | - | - | 1 | 1828 225 |
| 8-35-59 | SWITCH, Starter and Ignition | 6-8 | 60 | 60 | 60 | 60 | 1 | 2097 628 |
| 8-35-85 | RING, Starter and Ignition Switch Retainer | 6-8 | 60 | - | - | - | 1 | ⊟1972 084 |
| | PD3, PD4 | 6-8 | - | 60 | - | - | 1 | 2096 155 |
| | PD1, PD2 | 8 | - | 60 | 60 | - | 1 | ⊟2096 115 |
| | Retainer, PC1, PC2, PC3 | 8 | - | - | - | 60 | 1 | 2096 317 |
| | PY1 | 8 | - | - | - | 60 | 1 | 1971 873 |
| 8-35-111 | CYLINDER PACKAGE, Ignition and Door Lock | 6-8 | 60 | 60 | 60 | 60 | 1 | ⊟2161 503 |
| | Taxi | 6-8 | 60 | - | - | - | 1 | 2080 227 |
| 8-35-115 | CYLINDER and KEY, Ignition Lock | 6-8 | 60 | 60 | 60 | 60 | 1 | 2086 047 |
| 8-35-122 | KEY, Ignition and Door Lock Cylinder Blank, PC1, PC2, PC3 | 6-8 | 60 | 60 | 60 | 60 | ★ | 1649 628 |
| | PY1 | 8 | - | - | - | 60 | ★ | 1698 845 |
| **8-36-0** | **IGNITION** | | | | | | | |
| 8-36-1 | PACKAGE, MoPar Ignition Cable, Resistor Type | 6 | 60 | 60 | - | - | 6 | 2084 645 |
| | SET, Resistor Type | 6 | 60 | 60 | - | - | 1 | 2196 052 |
| | SET, Mopar Ignition Cable, PP2, PD4, w/o High Performance, w/o Ram Manifold, Complete | 8 | 60 | 60 | - | - | 1 | 2084 219 |
| | PACKAGE, Resistor Ignition Cable and Terminal, PP2, PD4, w/o High Performance, w/o Ram Manifold | 8 | 60 | 60 | - | - | 8 | 2084 064 |
| | PACKAGE, Resistor Ignition Cable and Terminal, PP2 w/High Performance, w/Ram Manifold, PD1-D500, PD2-D500, PD4-D500, PS1 w/Ram Manifold, PS3 w/Ram Manifold, PC3-300, No. 3 Cable | 8 | 60 | 60 | 60 | 60 | 1 | 2084 456 |
| | PACKAGE, Resistor Ignition Cable and Terminal, PP2 w/High Performance, w/Ram Manifold, PD1-D500, PD2-D500, PD4-D500, PS1 w/Ram Manifold, PS3 w/Ram Manifold, PC3-300, except No. 3 Cable | 8 | 60 | 60 | 60 | 60 | 7 | 2084 458 |
| | SET, MoPar Ignition Cable, PP2 w/High Performance, w/o Ram Manifold, PD1, PD2, PD4 High Performance, w/o Ram Manifold, PS1 w/o Ram Manifold, PS3 w/o Ram Manifold, PC1, PC2, PC3 except PC3-300, PY1 | 8 | 60 | 60 | 60 | 60 | 1 | 2084 217 |
| | SET, PP2 High Performance, PD1-D500, PD2-D500, PD4-D500, PS1 High Performance, PS3 High Performance, w/Ram Manifold, PC3-300 | 8 | 60 | 60 | 60 | 60 | 1 | 2084 368 |



MyMopar.com

| CODE | PART NAME AND DESCRIPTION | NO. OF CYL. | PLYMOUTH | DODGE | DESOTO | CHRYSLER AND IMPERIAL | PER CAR | PART NUMBER |
|---|---|---|---|---|---|---|---|---|
| **8-36-0** | **IGNITION - Cont'd** | | | | | | | |
| 8-36-1 | PACKAGE, Resistor Ignition Cable and Terminal, PD1, PD2, PD4 High Performance, PS1 w/o Ram Manifold, PS3 w/o Ram Manifold, No. 2 Cable | 8 | - | 60 | 60 | 60 | 1 | 2084 065 |
| | PACKAGE, Resistor Ignition Cable and Terminal, PD1, PD2, PD4 High Performance, PS1 w/o Ram Manifold, PS3 w/o Ram Manifold, except No. 2 Cable | 8 | - | 60 | 60 | 60 | 7 | 2084 064 |
| 8-36-4 | BRACKET, Spark Plug Wire, PD4 | 8 | 60 | 60 | - | - | 2 | 1739 355 |
| 8-36-47 | SLEEVE, Coil Secondary Cable | 6-8 | 60 | 60 | 60 | 60 | 1 | 1665 085 |
| 8-36-49 | PACKAGE, Coil Secondary Cable | 6-8 | 60 | 60 | 60 | 60 | 1 | 2084 427 |
| 8-36-96 | NIPPLE, Coil Secondary Cable Terminal Distributor End | 6-8 | 60 | 60 | 60 | 60 | ★ | 1658 838 |
| | Coil Secondary Cable Terminal Coil End | 6-8 | 60 | 60 | 60 | 60 | ★ | 1662 294 |
| | Spark Plug Cable Terminal Distributor End | 6-8 | 60 | 60 | 60 | 60 | ★ | 1658 838 |
| 8-36-114 | PLUG, Spark, Low Compression Eng., Export, AG52 | 6 | 60 | 60 | - | - | 6 | 2095 289 |
| | AG42 | 6 | 60 | 60 | - | - | 6 | 1889 860 |
| | A42 | 8 | 60 | 60 | 60 | 60 | 8 | 1889 520 |
| | Low Compression Eng., Export, A52 | 8 | 60 | 60 | 60 | 60 | 8 | 1889 522 |
| | PD1-D500, PD2-D500, PD4-D500, High Performance, A32 | 8 | 60 | 60 | 60 | - | 8 | 1889 521 |
| | PC3-300, A32 | 8 | - | - | - | 60 | 8 | 1889 521 |
| 8-36-117 | COVER, Spark Plug Cable | 6 | 60 | 60 | - | - | 6 | *1889 921 |
| | PD1, PD2 | 8 | 60 | 60 | 60 | 60 | 8 | *1889 517 |
| 8-36-124 | SHIELD, Spark Plug Heat | 8 | 60 | 60 | 60 | 60 | 2 | 1821 394 |
| 8-36-136 | TUBE, Spark Plug | 6 | 60 | 60 | - | - | 6 | 2121 245 |
| 8-36-137 | SEAL, Spark Plug Tube | 6 | 60 | 60 | - | - | 6 | 1947 708 |
| **8-37-0** | **INSTRUMENT PANEL INSTRUMENTS** | | | | | | | |
| 8-37-1 | INDICATOR, Ammeter | 6-8 | - | 60 | 60 | - | 1 | 2096 020 |
| | PC1, PC2, PC3 | 8 | - | - | - | 60 | 1 | 2096 581 |
| | w/Gray Back Ground, PY1 | 8 | - | - | - | 60 | 1 | *1971 107 |
| | w/Black Back Ground, PY1 | 8 | - | - | - | 60 | 1 | ⊟2198 581 |
| 8-37-2 | LIMITER, Fuel and Temperature Gauge Voltage | 6-8 | 60 | - | - | - | 1 | 2096 883 |
| | Instrument Voltage, PC1, PC2, PC3 | 8 | - | - | - | 60 | 1 | ⊟2257 297 |
| 8-37-3 | INSULATOR, Instrument Voltage Limiter Capacitor, PC1, PC2, PC3 | 8 | - | - | - | 60 | 1 | *1842 020 |
| 8-37-11 | CAPACITOR, Instrument Voltage Limiter, PC1, PC2, PC3 | 8 | - | - | - | 60 | 1 | *1972 760 |
| 8-37-15 | LAMP, Ignition, Interior and Lighter Title, Right, PD1, PD2 | 8 | - | 60 | 60 | - | 1 | 1971 778 |
| | Left, Lights, Wiper and Brake, PD1, PD2 | 8 | - | 60 | 60 | - | 1 | 1971 779 |
| | w/CABLE, Heater Air Conditioning Control Electro Luminescent, PC1, PC2, PC3 | 8 | - | - | - | 60 | 1 | 1971 444 |
| | Rear Window Defroster Blower Switch Title, PY1 | 8 | - | - | - | 60 | 1 | 1972 633 |
| | W/S Wiper Switch Title, PY1 | 8 | - | - | - | 60 | 1 | 1971 620 |
| | Accessory Switch Title, PY1 | 8 | - | - | - | 60 | 1 | 1971 626 |
| | Rear Air Conditioning Blower Switch Title, PY1 | 8 | - | - | - | 60 | 1 | 1972 633 |
| | Top Lift Switch Title, PY1 | 8 | - | - | - | 60 | 1 | 1972 635 |
| | Headlamp and Instrument Lamp Switch Title, PY1 | 8 | - | - | - | 60 | 1 | 1971 622 |
| 8-37-17 | POWER SUPPLY, Electro Luminescent, PC1, PC2, PC3 | 8 | - | - | - | 60 | 1 | 2196 314 |
| | PY1 | 8 | - | - | - | 60 | 1 | 2084 422 |
| 8-37-62 | LENS, Instrument and Indicator, Fuel and Oil | 6-8 | - | 60 | 60 | - | 1 | ⊟2096 973 |
| | Temperature and Ammeter | 6-8 | - | 60 | 60 | - | 1 | ⊟2096 972 |
| 8-37-85 | LENS, Low Oil Pressure Indicator Lamp | 6-8 | 60 | - | - | - | 1 | ⊟1971 587 |
| | Generator Indicator Lamp | 6-8 | 60 | - | - | - | 1 | ⊟1971 588 |
| 8-37-88 | SOCKET, Generator Indicator Lamp | 6-8 | 60 | 60 | 60 | - | 1 | 1753 632 |
| | Low Oil Pressure Indicator Lamp | 6-8 | 60 | 60 | 60 | - | 1 | 1753 632 |



MyMopar.com

| CODE | PART NAME AND DESCRIPTION | NO. OF CYL. | PLYMOUTH | DODGE | DESOTO | CHRYSLER AND IMPERIAL | PER CAR | PART NUMBER |
|---|---|---|---|---|---|---|---|---|
| **8-37-0** | **INSTRUMENT PANEL INSTRUMENTS - Cont'd** | | | | | | | |
| 8-37-90 | BEZEL, Instrument Panel Instrument | 6-8 | 60 | - | - | - | 1 | 1839 711 |
| | Instrument Cluster Switch Mounting, PC1, PC2, PC3 | 8 | - | - | - | 60 | 1 | 1971 519 |
| | PY1 | 8 | - | - | - | 60 | 1 | 2080 124 |
| | Left, PY1 | 8 | - | - | - | 60 | 1 | 2161 220 |
| 8-37-136 | GAUGE, Temperature, Thermostat, King-Seeley | 6-8 | 60 | - | - | - | 1 | 1972 345 |
| | Thermostat, Stewart and Warner | 6-8 | 60 | - | - | - | 1 | |
| | | 6-8 | - | 60 | - | - | 1 | 2096 879 |
| | | 8 | - | - | 60 | - | 1 | 2096 095 |
| | PC1, PC2, PC3 | 8 | - | - | - | 60 | 1 | 2096 577 |
| | w/Gray Background, PY1 | 8 | - | - | - | 60 | 1 | *1971 104 |
| | w/Black Background, PY1 | 8 | - | - | - | 60 | 1 | ⊟2198 575 |
| 8-37-155 | SENDING UNIT, Temperature Gauge | 6-8 | 60 | 60 | 60 | 60 | 1 | 2084 459 |
| 8-37-162 | LENS, Instrument Cluster | 6-8 | 60 | - | - | - | 1 | ⊟1971 182 |
| | Instrument and Indicator, Temperature and Ammeter | 6-8 | - | 60 | 60 | - | 1 | ⊟2096 967 |
| | Fuel and Oil | 6-8 | - | 60 | 60 | - | 1 | ⊟2096 968 |
| | Speedometer and Instrument Cluster, PY1 | 8 | - | - | - | 60 | 2 | *1887 923 |
| 8-37-177 | HOUSING and LENS PACKAGE, Instrument Cluster, PC1, PC2, PC3 | 8 | - | - | - | 60 | 1 | 2084 072 |
| 8-37-178 | CLUSTER, Instrument | 6-8 | 60 | - | - | - | 1 | 1971 189 |
| | HOUSING, Instrument Panel Instruments, White, w/o Clock | 6-8 | - | 60 | - | - | 1 | 1839 728 |
| | | 8 | - | - | 60 | - | 1 | 2080 913 |
| | w/CLOCK | 6-8 | - | 60 | - | - | 1 | 2080 791 |
| | Instrument Panel Instrument, PY1 | 8 | - | - | - | 60 | 1 | *2080 151 |
| | HOUSING and LENS, Instrument Cluster, w/Gray Background, PY1 | 8 | - | - | - | 60 | 1 | *1971 100 |
| | w/Black Background, PY1 | 8 | - | - | - | 60 | 1 | ⊟2198 571 |
| 8-37-199 | NUT, Instrument Cluster Lens Mounting, PY1 | 8 | - | - | - | 60 | 4 | 1626 973 |
| 8-37-200 | SCREW, Speedometer and Instrument Cluster Lens Mounting, PC1, PC2, PC3 | 8 | - | - | - | 60 | 6 | 1972 757 |
| | Instrument Gauge Mounting, PC1, PC2, PC3 | 8 | - | - | - | 60 | 8 | 1972 757 |
| 8-37-275 | GAUGE, Fuel, Thermostat, King-Seeley | 6-8 | 60 | - | - | - | 1 | 1972 344 |
| | Thermostat, Stewart-Warner | 6-8 | 60 | - | - | - | 1 | |
| | | 6-8 | - | 60 | - | - | 1 | 2096 881 |
| | | 8 | - | - | 60 | - | 1 | 2096 097 |
| | PC1, PC2, PC3 | 8 | - | - | - | 60 | 1 | 2096 578 |
| | w/Gray Background, PY1 | 8 | - | - | - | 60 | 1 | *1971 105 |
| | w/Black Background, PY1 | 8 | - | - | - | 60 | 1 | ⊟2198 577 |
| 8-37-316 | INDICATOR, Oil | 6-8 | - | 60 | 60 | - | 1 | 2096 021 |
| | PC1, PC2, PC3 | 8 | - | - | - | 60 | 1 | 2096 580 |
| | w/Gray Background, PY1 | 8 | - | - | - | 60 | 1 | *1971 106 |
| | w/Black Background PY1 | 8 | - | - | - | 60 | 1 | ⊟2198 579 |
| 8-37-317 | SENDING UNIT, Oil Pressure | 8 | - | - | - | 60 | 1 | 1972 241 |
| 8-37-372 | SPEEDOMETER, Mile | 6-8 | 60 | - | - | - | 1 | ⊟2198 713 |
| | Kilo | 6-8 | 60 | - | - | - | 1 | ⊟2198 714 |
| | Mile | 6-8 | - | 60 | - | - | 1 | 1971 018 |
| | Kilo | 6-8 | - | 60 | - | - | 1 | 1971 019 |
| | Mile | 8 | - | - | 60 | - | 1 | 2096 240 |
| | Kilo | 8 | - | - | 60 | - | 1 | 2096 241 |
| | Mile, PC1, PC2, PC3 | 8 | - | - | - | 60 | 1 | 2096 562 |
| | Kilo, PC1, PC2, PC3 | 8 | - | - | - | 60 | 1 | 2096 563 |
| | Mile, 150 Mile, PC3, PC3-300 | 8 | - | - | - | 60 | 1 | 2096 564 |
| | Mile, w/Gray Background, PY1 | 8 | - | - | - | 60 | 1 | *1887 922 |
| | Mile, w/Black Background, PY1 | 8 | - | - | - | 60 | 1 | ⊟2198 587 |
| | Kilo, w/Gray Background, PY1 | 8 | - | - | - | 60 | 1 | *1971 773 |
| | Kilo, w/Black Background, PY1 | 8 | - | - | - | 60 | 1 | ⊟2198 588 |
| 8-37-380 | FLASHER, Speedometer Warning Signal Lamp, PY1 | 8 | - | - | - | 60 | 1 | 1971 896 |
| 8-37-399 | DIAL, Speedometer, Mile, PC1, PC2, PC3 | 8 | - | - | - | 60 | 1 | ⊟2096 566 |



MyMopar.com

| CODE | PART NAME AND DESCRIPTION | NO. OF CYL. | PLYMOUTH | DODGE | DESOTO | CHRYSLER AND IMPERIAL | PER CAR | PART NUMBER |
|---|---|---|---|---|---|---|---|---|
| **8-37-0** | **INSTRUMENT PANEL INSTRUMENTS - Cont'd** | | | | | | | |
| 8-37-410 | LENS, Speedometer, Mile | 6-8 | 60 | - | - | - | 1 | 2097 557 |
| | Kilo | 6-8 | 60 | - | - | - | 1 | 2097 558 |
| | Mile | 6-8 | - | 60 | - | - | 1 | 1971 015 |
| | Mile | 8 | - | - | 60 | - | 1 | 2096 237 |
| | Speedometer and Instrument, PY1 | 8 | - | - | - | 60 | 2 | ⊟2198 573 |
| 8-37-411 | BEZEL, Speedometer | 6-8 | 60 | - | - | - | 1 | 2096 284 |
| | NACELLE, Speedometer, Upper, White | 6-8 | 60 | - | - | - | 1 | 2096 277 |
| | Lower, White | 6-8 | 60 | - | - | - | 1 | 2096 279 |
| 8-37-415 | RETAINER, Speedometer Nacelle, Upper to Lower Half | 6-8 | 60 | - | - | - | 2 | 1972 141 |
| 8-37-416 | NUT, Speedometer Lens Mounting | 8 | - | - | 60 | - | 2 | ⊟2096 449 |
| 8-37-458 | CABLE, Instrument Panel Speedometer Reset, PY1 | 8 | - | - | - | 60 | 1 | 2096 740 |
| 8-37-504 | TACHOMETER, 6000 RPM, PC3-300 | 8 | - | - | - | 60 | 1 | 2096 733 |
| 8-37-508 | CABLE, Tachometer, PC3-300 | 8 | - | - | - | 60 | ★ | 2096 954 |
| 8-37-517 | SHAFT, Tachometer Drive, PC3-300 | 8 | - | - | - | 60 | 1 | 2096 976 |
| **8-38-0** | **GLOVE COMPARTMENT LIGHT** | | | | | | | |
| 8-38-4 | BEZEL and LENS, Glove Compartment Lamp, PY1 | 8 | - | - | - | 60 | 1 | 1819 441 |
| **8-39-0** | **HEADLAMP BEAM INDICATOR LIGHT** | | | | | | | |
| 8-39-3 | LAMP, High Beam Indicator | 8 | - | - | 60 | - | 1 | 2096 389 |
| | BEZEL, LENS and MEDALLION, High Beam Indicator, PY1 | 8 | - | - | - | 60 | 1 | 1971 677 |
| 8-39-4 | NUT, High Beam Indicator Mounting, PY1 | 8 | - | - | - | 60 | 2 | 1626 973 |
| | High Beam Indicator Lens and Medallion Mounting, PY1 | 8 | - | - | - | 60 | 3 | 1626 973 |
| 8-39-15 | SOCKET, High Beam Indicator Lamp, PC1, PC2, PC3 | 6-8 | 60 | 60 | - | 60 | 1 | 1689 538 |
| | | 8 | - | - | 60 | - | 1 | ⊟2257 722 |
| **8-40-0** | **IGNITION LAMP** | | | | | | | |
| 8-40-8 | GASKET, Ignition Switch Lamp Mounting, PC1, PC2, PC3 | 8 | - | - | - | 60 | 1 | 1971 224 |
| 8-40-9 | BEZEL, Ignition Switch Lamp Retaining, PY1 | 8 | - | - | - | 60 | 1 | 1887 784 |
| 8-40-13 | LENS and RETAINER, Ignition Switch Lamp, PY1 | 8 | - | - | - | 60 | 1 | 2097 114 |
| 8-40-16 | SOCKET, Ignition Switch Lamp, PC1, PC2, PC3 | 8 | - | - | - | 60 | 1 | 1689 538 |
| **8-41-0** | **INSTRUMENT PANEL LIGHT** | | | | | | | |
| 8-41-36 | SOCKET, Instrument Panel and Speedometer Lamp | 6-8 | 60 | 60 | 60 | - | ★ | 1689 538 |
| **8-42-0** | **MAP LAMP** | | | | | | | |
| 8-42-2 | LENS, Switch and Bracket, Map Lamp | 8 | 60 | - | - | - | 1 | 2084 672 |
| 8-42-5 | LENS, Map and Courtesy Lamp, PC1, PC2, PC3 | 8 | - | - | - | 60 | 1 | 1887 329 |
| 8-42-6 | HOUSING and LENS, Map Lamp | 6-8 | - | 60 | 60 | - | 1 | 1887 955 |
| 8-42-10 | SOCKET, Map Lamp, Cv. Cp. | 8 | 60 | - | - | - | 1 | 1314 619 |
| | Except Cv. Cp. | 6-8 | - | 60 | - | - | 1 | 1704 875 |
| | PS1 | 8 | - | - | 60 | 60 | 1 | 1704 467 |
| 8-42-25 | SWITCH, Map Lamp | 6-8 | - | 60 | 60 | - | 1 | 1972 507 |
| | PC1, PC2, PC3 | 8 | - | - | - | 60 | 1 | 1972 669 |
| | Map and Courtesy Lamp Housing Antenna and Map, PY1 | 8 | - | - | - | 60 | 1 | 1971 978 |
| 8-42-26 | NUT, Map and Courtesy Lamp Switch Mounting, PC1, PC2, PC3 | 8 | - | - | - | 60 | 1 | 1971 521 |



MyMopar.com

| CODE | PART NAME AND DESCRIPTION | NO. OF CYL. | PLYMOUTH | DODGE | DESOTO | CHRYSLER AND IMPERIAL | PER CAR | PART NUMBER |
|---|---|---|---|---|---|---|---|---|
| **8-42-0** | **MAP LAMP - Cont'd** | | | | | | | |
| 8-42-29 | BEZEL, Map Lamp Switch Mounting | 6-8 | - | 60 | 60 | - | 1 | 1887 789 |
| 8-42-31 | KNOB, Map Lamp Switch, PD3 PD4 | 6-8 | - | 60 | 60 | - | 1 | *1887 909 |
| | PD1, PD2 | 8 | - | 60 | - | - | 1 | 1887 860 |
| | Map and Courtesy Lamp Switch Control, PC1, PC2, PC3 | 8 | - | - | - | 60 | 1 | 1887 991 |
| | PY1 | 8 | - | - | - | 60 | 1 | *1887 935 |
| **8-44-0** | **BULBS** | | | | | | | |
| 8-44-1 | BULB, Tail, Stop and Turn Signal Lamp | 6-8 | 60 | 60 | 60 | 60 | 2 | 151 567 |
| | License Lamp | 6-8 | 60 | 60 | 60 | 60 | ★ | 142 450 |
| | Dome Lamp Socket | 6-8 | 60 | 60 | 60 | 60 | ★ | 151 578 |
| | Quarter Arm Rest Bezel Lens and Retainer, PD2, PD4, PC1, PC3, Cv. Cp. | 8 | - | 60 | - | 60 | 2 | 142 453 |
| | Open Door Indicator Lamp, 4 D. | 6-8 | 60 | - | - | - | 1 | 142 451 |
| | Push Button Gearshift Lamp | 6-8 | 60 | - | - | - | 1 | 152 240 |
| | | 6-8 | - | 60 | 60 | - | 1 | 127 934 |
| | PC1, PC2, PC3 | 8 | - | - | - | 60 | 1 | 152 240 |
| | Glove Compartment Lamp | 6-8 | 60 | 60 | 60 | - | 1 | 131 282 |
| | PC1, PC2, PC3 | 8 | - | - | - | 60 | 1 | 127 934 |
| | Generator Indicator Lamp. | 6-8 | 60 | 60 | 60 | - | 1 | 127 934 |
| | Low Oil Pressure | 6-8 | 60 | 60 | 60 | - | 1 | 127 934 |
| | Turn Signal Indicator Lamp | 6-8 | 60 | 60 | 60 | 60 | 2 | 127 934 |
| | High Beam Indicator Lamp, PD1, PD2, PY1 | 6-8 | 60 | 60 | - | 60 | 1 | 127 934 |
| | PD3, PD4, PS1 | 6-8 | - | 60 | 60 | - | 1 | 274 004 |
| | Instrument Lamp | 6-8 | 60 | 60 | 60 | - | ★ | 127 934 |
| | Map Lamp, Cv. Cp. | 8 | 60 | - | - | - | 2 | 142 453 |
| | PS1 | 6-8 | - | 60 | 60 | 60 | 1 | 151 578 |
| | Back-Up Lamp, w/Std. Trans., except Sub. | 6-8 | 60 | - | - | - | 2 | 127 934 |
| | w/Std. Trans. | 6-8 | - | 60 | - | - | 2 | 127 934 |
| | w/Auto. Trans., except Sub., PC1 | 6-8 | 60 | - | - | 60 | 2 | 151 576 |
| | PC2, PC3, PY1 | 6-8 | - | 60 | 60 | 60 | 2 | 151 576 |
| | Sub. | 6-8 | 60 | - | - | - | 2 | 151 576 |
| | Trunk Lamp, except Sub., PC1, PC2, PC3 | 6-8 | 60 | 60 | 60 | 60 | 1 | 151 578 |
| | PY1 | 8 | - | - | - | 60 | 1 | 151 577 |
| | Courtesy Lamp, except Cv. Cp. | 6-8 | 60 | - | - | - | 2 | 142 453 |
| | | 6-8 | - | 60 | - | - | 2 | 142 453 |
| | Aft Dome Lamp, 4 D. Sub., PC1, PC3 | 6-8 | 60 | 60 | - | 60 | 1 | 151 578 |
| | Speedometer Lamp | 6-8 | - | 60 | 60 | - | 3 | 127 934 |
| | Quarter Panel Ornament Lamp, PD2 | 8 | - | 60 | - | - | 2 | 274 148 |
| | Parking Brake Signal Lamp, PC1, PC2, PC3 | 6-8 | - | 60 | 60 | 60 | 1 | 127 934 |
| | | 8 | - | - | - | 60 | 1 | 152 240 |
| | Parking and Turn Signal Lamp | 6-8 | - | 60 | 60 | 60 | 2 | 151 567 |
| | Automatic Headlamp Dimmer Indicator Lamp. | 8 | - | - | 60 | 60 | 1 | 274 004 |
| | Ash Receiver Lamp | 8 | - | - | 60 | 60 | 1 | 131 282 |
| | Ignition Switch Illuminated Lamp, PC1, PC2, PC3 | 8 | - | - | - | 60 | 1 | 127 934 |
| | Clock Lamp | 6-8 | - | 60 | - | - | 1 | 152 240 |
| | Rear Pocket Panel Courtesy Lamp, PY1 Cv. Cp. | 8 | - | - | - | 60 | 2 | 142 453 |
| **8-47-0** | **LICENSE MOUNTING PARTS** | | | | | | | |
| 8-47-8 | BRACKET, Front Bumper License | 6-8 | 60 | - | - | - | 2 | 1948 093 |
| | PC1, PC2, PC3 | 8 | - | - | - | 60 | 2 | 1943 559 |
| 8-47-15 | SPEEDNUT, Bumper to License Plate Screw | 6-8 | 60 | 60 | 60 | 60 | ★ | 6012 049 |
| 8-47-21 | BUTTON, Rear Bumper to License Plate, Sub., PC1, PC3 | 6-8 | 60 | 60 | - | 60 | 1 | 1940 397 |
| | Front Bumper License | 6-8 | 60 | - | - | - | 1 | 1940 397 |
| | Rear License Plate Bumper, except Sub. | 6-8 | - | 60 | - | - | 2 | 1948 988 |
| | Rear Bumper to License Plate, except Sub. | 6-8 | - | 60 | - | - | 2 | 1943 547 |
| | License Plate to Bumper, PY1 | 8 | - | - | - | 60 | 2 | 1941 007 |
| 8-47-22 | GROMMET, Rear License Plate Bumper, except Sub. | 6-8 | - | 60 | - | - | 2 | 1948 987 |
| 8-47-57 | FRAME, License Plate, Aluminum Finish | 6-8 | 60 | 60 | 60 | 60 | 1 | *1829 058 |



MyMopar.com

| CODE | PART NAME AND DESCRIPTION | NO. OF CYL. | PLYMOUTH | DODGE | DESOTO | CHRYSLER AND IMPERIAL | PER CAR | PART NUMBER |
|---|---|---|---|---|---|---|---|---|
| **8-47-0** | **LICENSE MOUNTING PARTS - Cont'd** | | | | | | | |
| 8-47-67 | SPRING, Deck Opening Lower Panel License Plate Mounting, except Sub., PC1, PC2, PC3 | 6-8 | 60 | - | 60 | 60 | 1 | 1960 131 |
| 8-47-68 | PANEL, Deck Opening Lower Panel License Plate Mounting, except Sub. | 6-8 | 60 | - | - | - | 1 | 1960 181 |
| | Except Sub., PC1, PC2, PC3 | 8 | - | - | 60 | 60 | 1 | 1960 872 |
| 8-47-76 | PIN, Deck Opening Lower Panel License Plate Mounting Bracket Hinge, except Sub., PC1, PC2, PC3 | 6-8 | 60 | - | 60 | 60 | 1 | 1960 127 |
| 8-47-79 | RETAINER, Deck Opening Lower Panel License Plate Mounting Bracket Hinge Pin, except Sub., PC1, PC2, PC3 | 6-8 | 60 | - | 60 | 60 | 1 | 6006 324 |
| 8-47-126 | BUMPER, Deck Opening Lower Panel License Plate Mounting, except Sub., PC1, PC2, PC3 | 6-8 | 60 | - | 60 | 60 | 2 | 1960 130 |
| 8-47-131 | NUT and WASHER, Deck Opening Lower Panel License Plate Mounting Bracket Hinge, except Sub., PC1, PC2, PC3 | 6-8 | 60 | - | 60 | 60 | 2 | 6006 035 |
| **8-50-0** | **PARKING AND DIRECTIONAL LAMPS** | | | | | | | |
| 8-50-82 | SWITCH, Turn Signal | 6-8 | 60 | 60 | 60 | - | 1 | 1972 196 |
| | PY1 | 8 | - | - | - | 60 | 1 | 1971 451 |
| 8-50-83 | ESCUTCHEON, Turn Signal Switch, PY1 | 8 | - | - | - | 60 | 1 | 2096 367 |
| 8-50-98 | SWITCH, Turn Signal Actuating, PC1, PC2, PC3 | 8 | - | - | - | 60 | 1 | *1971 750 |
| 8-50-103 | ARM PACKAGE, Turn Signal Switch Operating | 6-8 | 60 | 60 | 60 | - | 1 | 2084 304 |
| 8-50-125 | SWITCH, Turn Signal Cancel | 8 | - | - | - | 60 | 1 | ⊟2257 267 |
| 8-50-126 | FINGER, Turn Signal Switch Cancelling, w/Auto. Trans., Power Steering | 6-8 | 60 | 60 | 60 | - | 1 | 1972 201 |
| | w/o Power Steering, w/o Steering Gear Coupling | 6-8 | 60 | 60 | 60 | 1 | 1 | *1972 202 |
| | w/o Power Steering, used only w/Steering Gear Coupling | 6-8 | 60 | 60 | 60 | - | 1 | ⊟2197 170 |
| | Turn Signal Switch Steering Wheel Cancelling, w/Power Steering | 6-8 | 60 | 60 | 60 | - | 1 | 1769 326 |
| 8-50-129 | LEVER, w/KNOB, Turn Signal | 6-8 | 60 | - | - | - | 1 | 2096 184 |
| | | 6-8 | - | 60 | - | - | 1 | 1971 378 |
| | LEVER, Turn Signal | 8 | - | - | 60 | - | 1 | 1971 754 |
| 8-50-133 | KNOB, Turn Signal Actuating Switch, PC1, PC2, PC3 | 8 | - | - | - | 60 | 1 | 1971 751 |
| | PY1 | 8 | - | - | - | 60 | 1 | 1971 454 |
| 8-50-135 | PLATE, Turn Signal Switch Contact | 6-8 | 60 | 60 | 60 | - | 1 | 2196 322 |
| 8-50-156 | SOCKET, Turn Signal Indicator Lamp, PS1, PC1, PC2, PC3 | 6-8 | 60 | 60 | 60 | 60 | 1 | 1689 538 |
| 8-50-170 | LENS, Turn Signal Indicator | 6-8 | - | 60 | 60 | - | 2 | 1971 302 |
| 8-50-175 | LAMP, Turn Signal Indicator, w/Gray Background, PY1 | 8 | - | - | - | 60 | 2 | *1887 926 |
| | w/Black Background, PY1 | 8 | - | - | - | 60 | 2 | ⊟2198 585 |
| 8-50-186 | FLASHER, Turn Signal | 6-8 | 60 | 60 | 60 | 60 | 1 | *1930 225 |
| 8-50-191 | CLIP, Turn Signal Flasher Mounting | 6-8 | 60 | 60 | 60 | 60 | 1 | 6015 159 |
| 8-50-303 | LAMP, Park and Turn Signal, Right | 6-8 | 60 | - | - | - | 1 | 1902 900 |
| | Left | 6-8 | 60 | - | - | - | 1 | 1902 901 |
| | Right | 6-8 | - | 60 | - | - | 1 | 1863 384 |
| | Left | 6-8 | - | 60 | - | - | 1 | 1863 385 |
| | Right | 8 | - | - | 60 | - | 1 | 1903 756 |
| | Left | 8 | - | - | 60 | - | 1 | 1903 757 |
| | Right, PC1, PC2, PC3 | 8 | - | - | - | 60 | 1 | 1902 924 |
| | Left, PC1, PC2, PC3 | 8 | - | - | - | 60 | 1 | 1902 925 |
| | PY1 | 8 | - | - | - | 60 | 2 | 1863 156 |
| 8-50-306 | SCREW, Parking and Turn Signal Lamp Frame to Dust Shield | 6-8 | 60 | - | - | - | 4 | 1903 571 |
| 8-50-307 | NUT and SEALER, Parking and Turn Signal Lamp Housing, PC1, PC2, PC3 | 8 | - | - | 60 | 60 | 4 | 6000 028 |
| 8-50-335 | LENS, Parking and Turn Signal Lamp, Right | 6-8 | 60 | - | - | - | 1 | 1902 906 |
| | Left | 6-8 | 60 | - | - | - | 1 | 1902 907 |
| | Right | 6-8 | - | 60 | - | - | 1 | 1863 390 |
| | Left | 6-8 | - | 60 | - | - | 1 | 1863 391 |



MyMopar.com

| CODE | PART NAME AND DESCRIPTION | NO. OF CYL. | PLYMOUTH | DODGE | DESOTO | CHRYSLER AND IMPERIAL | PER CAR | PART NUMBER |
|---|---|---|---|---|---|---|---|---|
| **8-50-0** | **PARKING AND DIRECTIONAL LAMPS - Cont'd** | | | | | | | |
| 8-50-335 | LENS - Cont'd | | | | | | | |
| | Right | 8 | - | - | 60 | - | 1 | 1903 762 |
| | Left | 8 | - | - | 60 | - | 1 | 1903 763 |
| | Right, PC1, PC2, PC3 | 8 | - | - | - | 60 | 1 | 1902 932 |
| | Left, PC1, PC2, PC3 | 8 | - | - | - | 60 | 1 | 1902 933 |
| | PY1 | 8 | - | - | - | 60 | 2 | 1863 153 |
| 8-50-337 | SCREW, Parking and Turn Signal Lamp Lens Mounting | 6-8 | 60 | - | - | - | 4 | 1903 571 |
| | PY1 | 8 | - | - | - | 60 | 4 | 1863 514 |
| 8-50-338 | GASKET, Parking and Turn Signal Lamp Lens | 6-8 | 60 | - | - | - | 2 | 1902 910 |
| | | 6-8 | - | 60 | - | - | 2 | 1863 392 |
| | | 8 | - | - | 60 | - | 1 | 1903 754 |
| | PC1, PC2, PC3 | 8 | - | - | - | 60 | 2 | 1902 934 |
| | PY1 | 8 | - | - | - | 60 | 2 | 1863 152 |
| 8-50-349 | CABLE and SOCKET, Parkihg and Turn Signal Lamp, PC1, PC2, PC3 | 6-8 | - | 60 | 60 | 60 | 2 | 1903 387 |
| | PY1 | 8 | - | - | - | 60 | 2 | 1903 517 |
| 8-50-351 | SOCKET, Parking and Turn Signal Lamp | 6-8 | 60 | - | - | - | 2 | 1863 196 |
| **8-52-0** | **STARTING MOTOR** | | | | | | | |
| 8-52-4 | STARTER MOTOR, Assembly | 6 | 60 | 60 | - | - | 1 | 2095 254 |
| | PD4 | 8 | 60 | 60 | - | - | 1 | 1889 260 |
| | High Performance, "B" Eng. | 8 | 60 | - | - | - | 1 | *1779 955 |
| | PD1, PD2 | 8 | - | 60 | - | - | 1 | *1779 955 |
| | PD4-D500, w/Ram Manifold | 8 | - | 60 | - | - | 1 | *1779 955 |
| | PD4, PD4-D500, w/o Ram Manifold, High Performance | 8 | - | 60 | - | - | 1 | *1779 955 |
| | Stamped 1889 200 | 8 | - | - | 60 | 60 | 1 | 1889 200 |
| 8-52-39 | SEAL, Cylinder Block to Starter | 6 | 60 | 60 | - | - | 1 | 2128 412 |
| | | 8 | 60 | 60 | 60 | 60 | 1 | 2128 285 |
| 8-52-328 | RELAY, Starter, PC1 | 8 | - | - | 60 | 60 | 1 | 1842 550 |
| | PC2, PC3, PY1 | 8 | - | - | - | 60 | 1 | 1842 546 |
| 8-52-330 | SWITCH, Starter Solenoid, w/Std. Trans. | 6-8 | 60 | 60 | - | - | 1 | 1692 658 |
| | w/Auto. Trans. | 6-8 | 60 | 60 | - | - | 1 | 1692 659 |
| | Starter Shift Solenoid | 8 | - | - | 60 | 60 | 1 | 1889 799 |
| 8-52-345 | SOLENOID, Starter, Complete | 8 | - | - | 60 | 60 | 1 | *1889 146 |
| 8-52-357 | CABLE, Starter Solenoid to Starter | 6-8 | 60 | 60 | - | - | 1 | 1879 938 |

FOR MODEL APPLICATION SEE CODE 8-52-4

| CODE | REMARKS | STARTER ASSEMBLIES 2095 254 MDT-7002 | 1889 260 MDU-6003 | *1779 955 MDT-6001 | 1889 200 |
|---|---|---|---|---|---|
| 8-52-2 | PACKAGE, Field Coil | 2084 660 | 1879 574 | *1879 319 | ---- --- |
| 8-52-5 | STUD, Starter Mounting | *2121 163 | ---- --- | ---- --- | ---- --- |
| 8-52-11 | BEARING, Intermediate | 1138 526 | 1138 526 | 1138 526 | ---- --- |
| 8-52-13 | BENDIX DRIVE | 1889 938 | 2084 664 | *1752 387 | ---- --- |
| 8-52-23 | PIN, Bendix Drive Spring | 2095 627 | 2095 627 | 2095 627 | ---- --- |
| 8-52-41 | CLUTCH | ---- --- | ---- --- | ---- --- | 1889 129 |
| 8-52-49 | PACKAGE, Shifting Fork and Pin | ---- --- | ---- --- | ---- --- | 2084 093 |
| 8-52-76 | HOUSING, Pinion | 2196 324 | 1889 262 | *1843 320 | 1889 154 |
| 8-52-80 | BEARING, Pinion Housing | 2196 325 | 1752 378 | 1752 378 | 1889 907 |
| 8-52-82 | PACKAGE, Pinion Stop Snap Ring and Stop Washer | ---- --- | ---- --- | ---- --- | 1881 727 |
| 8-52-88 | BOOT, Shifting Fork | ---- --- | *1889 147 | *1889 147 | *1889 147 |
| 8-52-120 | ARMATURE | 2196 323 | 1752 386 | *1752 386 | 1889 079 |
| 8-52-135 | PACKAGE, Brush | ---- --- | ---- --- | ---- --- | ⊟2240 749 |
| | BRUSH SET | 2084 661 | 1843 135 | *1843 135 | ---- --- |
| 8-52-137 | PLATE, Brush | 2084 665 | ---- --- | ---- --- | ---- --- |
| 8-52-140 | PACKAGE, Brush Spring | 2084 666 | ---- --- | ---- --- | 2084 095 |
| 8-52-150 | PACKAGE, Brush Holder | ---- --- | 1879 611 | *1879 611 | ---- --- |
| | HOLDER, Brush | ---- --- | ---- --- | ---- --- | 1889 044 |

★ Indicates use as required. Numerals in parentheses ( ) refer to notes. Printed in U.S.A.
⊟ Indicates parts not listed in any previous parts book. Prices and specifications subject to change without notice.
* Indicates change or addition.



Dec. 9, 1960 Supersedes April 20, 1960.

MyMopar.com

## 8-52-0 STARTING MOTOR - Cont'd

FOR MODEL APPLICATION SEE CODE 8-52-4

| CODE | REMARKS | STARTER ASSEMBLIES 2095 254 MDT-7002 | 1889 260 MDU-6003 | *1779 955 MDT-6001 | 1889 200 |
|---|---|---|---|---|---|
| 8-52-176 | HEAD, Commutator End Assembly | 1752 366 | 1752 366 | 1752 366 | 1889 363 |
| 8-52-180 | PACKAGE, Commutator End Thrust Washer | 1879 613 | 1879 613 | 1879 613 | ⊟2240 529 |
| 8-52-214 | PACKAGE, Field Series and Shunt Coil | ---- --- | ---- --- | ---- --- | 2084 088 |
| 8-52-241 | BOLT, Thru | 2084 659 | 1300 503 | *1300 503 | 1889 080 |
| 8-52-275 | PACKAGE, Terminal Stud | 2084 667 | 1879 612 | *1879 612 | ---- --- |
| 8-52-341 | PACKAGE, Solenoid Contact and Cover Gasket | ---- --- | ---- --- | ---- --- | 2084 091 |
| 8-52-344 | PACKAGE, Solenoid Cover and Gasket | ---- --- | ---- --- | ---- --- | 2084 090 |
| 8-52-354 | PACKAGE, Solenoid Terminal Relay Stud | ---- --- | ---- --- | ---- --- | 2084 094 |

| CODE | PART NAME AND DESCRIPTION | NO. OF CYL. | PLYMOUTH | DODGE | DESOTO | CHRYSLER AND IMPERIAL | PER CAR | PART NUMBER |
|---|---|---|---|---|---|---|---|---|
| **8-53-0** | **SWITCHES** | | | | | | | |
| 8-53-150 | SWITCH, Foot Dimmer | 6-8 | 60 | 60 | 60 | 60 | 1 | 1881 938 |
| 8-53-234 | SCREW, Switch Mounting Bezel Mounting to Instrument Housing, PC1, PC2, PC3 | 8 | - | - | - | 60 | 2 | 2198 117 |
| 8-53-265 | RHEOSTAT REPLACEMENT PACKAGE, Headlamp Switch, Stamped R.B.M. | 6-8 | 60 | 60 | 60 | - | 1 | ⊟2275 234 |
| | Stamped Fasco | 6-8 | 60 | 60 | 60 | - | 1 | ⊟2275 231 |
| | Stamped Fasco | 8 | - | - | - | 60 | 1 | ⊟2275 230 |
| 8-53-266 | CIRCUIT BREAKER, Rear Compartment Cigar Lighter, w/o Window Lifts and Electric Seats, 8 amp., PY1 | 8 | - | - | - | 60 | 1 | 1642 386 |
| | w/Electric Window Lift and 6 Way Seat, PY1 | 8 | - | - | - | 60 | 1 | 1642 477 |
| 8-53-267 | BRACKET, Circuit Breaker Mounting, PY1 | 8 | - | - | - | 60 | 1 | 1479 060 |
| 8-53-270 | SWITCH, Headlamp and Instrument Lamp | 6-8 | 60 | 60 | 60 | - | 1 | *2084 296 |
| | | 8 | - | - | - | 60 | 1 | 2084 057 |
| 8-53-271 | NUT, Headlamp and Instrument Lamp Switch Mounting | 6-8 | 60 | - | - | - | 1 | 1887 984 |
| 8-53-273 | BEZEL, Headlamp and Instrument Lamp Switch Title Lamp Retainer, PY1 | 8 | - | - | - | 60 | 1 | 1887 784 |
| | Accessory Switch Title Lamp Retainer, PY1 | 8 | - | - | - | 60 | 1 | 1887 784 |
| | Windshield Wiper Switch Title Lamp Retainer, PY1 | 8 | - | - | - | 60 | 1 | 1887 784 |
| 8-53-294 | BEZEL, Headlamp and Instrument Lamp Switch | 6-8 | 60 | - | - | - | 1 | *1887 601 |
| | Mounting PC1, PC2, PC3 | 8 | - | - | - | 60 | 1 | *1887 963 |
| 8-53-296 | KNOB, Headlamp and Instrument Lamp Switch Control | 6-8 | 60 | - | - | - | 1 | 1887 596 |
| | PD3, PD4 | 6-8 | - | 60 | - | - | 1 | 2096 306 |
| | PD1, PD2 | 8 | - | 60 | - | - | 1 | 1887 859 |
| | | 8 | - | - | 60 | - | 1 | 1887 871 |
| | w/STEM, PC1, PC2, PC3 | 8 | - | - | - | 60 | 1 | 1887 987 |
| | PY1 | 8 | - | - | - | 60 | 1 | 1887 933 |
| 8-53-317 | BEZEL and SPRING, Headlamp and Instrument Lamp Switch | 6-8 | - | 60 | 60 | - | 1 | 2097 503 |
| 8-53-327 | SWITCH, Low Oil Pressure | 6-8 | 60 | 60 | 60 | - | 1 | 1818 830 |
| **8-55-0** | **TAIL, STOP AND DIRECTIONAL SIGNAL LAMP** | | | | | | | |
| 8-55-1 | LAMP PACKAGE, Tail, Right, Sub. | 6-8 | 60 | - | - | - | 1 | 2084 670 |
| | Left | 6-8 | 60 | - | - | - | 1 | 2084 671 |
| | LAMP and HOUSING PACKAGE, Tail, Stop and Turn Signal, PD1, PD2 | 8 | - | 60 | - | - | 1 | 2084 067 |
| 8-55-7 | LAMP, Quarter Panel Tail, Stop, Turn Signal and Back-Up, Right, except Sub. | 6-8 | 60 | - | - | - | 1 | 1961 990 |
| | Left, except Sub. | 6-8 | 60 | - | - | - | 1 | 1961 991 |


MyMopar.com

## 8-55-0 TAIL, STOP AND DIRECTIONAL SIGNAL LAMP - Cont'd

| CODE | PART NAME AND DESCRIPTION | NO. OF CYL. | PLYMOUTH | DODGE | DESOTO | CHRYSLER AND IMPERIAL | PER CAR | PART NUMBER |
|---|---|---|---|---|---|---|---|---|
| 8-55-7 | LAMP, Quarter Panel Tail, Stop and Turn Signal, PD3, PD4, except Sub. | 6-8 | - | 60 | - | - | 2 | 2093 443 |
| | PD3, PD4, Sub. | 6-8 | - | 60 | - | - | 2 | 2093 442 |
| | Right | 8 | - | - | 60 | - | 1 | 2093 198 |
| | Left | 8 | - | - | 60 | - | 1 | 2093 199 |
| | Right, Sub., PC1, PC3 | 8 | - | - | - | 60 | 1 | 1961 344 |
| | Left, Sub., PC1, PC3 | 8 | - | - | - | 60 | 1 | 1961 345 |
| | Right, except Sub., PC1, PC2, PC3 | 8 | - | - | - | 60 | 1 | 1961 832 |
| | Left, except Sub., PC1, PC2, PC3 | 8 | - | - | - | 60 | 1 | 1961 833 |
| | PY1 | 8 | - | - | - | 60 | 2 | 1878 283 |
| 8-55-8 | GASKET, Quarter Panel Tail, Stop and Turn Signal Lamp, PD3, PD4 | 6-8 | - | 60 | - | - | 2 | 1961 945 |
| | GASKET, Tail, Stop and Turn Signal Lamp Housing, Sub., PD3, PD4 | 6-8 | - | 60 | - | - | 2 | 2093 172 |
| | Except Sub., PD3, PD4 | 6-8 | - | 60 | - | - | 2 | 2188 370 |
| | PD1, PD2 | 8 | - | 60 | - | - | 2 | 1961 047 |
| | Except Sub., PC1, PC2, PC3 | 8 | - | - | 60 | 60 | 2 | 2093 375 |
| | PY1 | 8 | - | - | - | 60 | 2 | 1878 280 |
| 8-55-9 | NUT and RETAINER, Quarter Panel Tail, Stop, Turn Signal and Back-Up Lamp, Sub. | 6-8 | 60 | - | - | - | 4 | 6000 124 |
| | Tail, Stop, Turn Signal and Back-Up Lamp Housing, except Sub. | 6-8 | 60 | - | - | - | 6 | 6012 008 |
| | Tail, Stop and Turn Signal Lamp Housing, PD1, PD2, All, PD3, PD4, Sub. | 6-8 | - | 60 | - | - | 6 | 6000 123 |
| 8-55-23 | REINFORCEMENT, Quarter Panel Tail Lamp Opening, Lower, Right, except Sub. | 6-8 | 60 | - | - | - | 1 | 1909 754 |
| | Left, except Sub. | 6-8 | 60 | - | - | - | 1 | 1909 755 |
| | Right, Lower, Sub. | 6-8 | 60 | - | - | - | 1 | 1961 934 |
| | Left, Lower, Sub. | 6-8 | 60 | - | - | - | 1 | 1961 935 |
| | w/C/NUT, Upper, Right | 6-8 | 60 | - | - | - | 1 | 1963 924 |
| | Left | 6-8 | 60 | - | - | - | 1 | 1963 925 |
| | Right, except Sub., PC1, PC2, PC3 | 8 | - | - | 60 | 60 | 1 | 1961 014 |
| | Left, except Sub., PC1, PC2, PC3 | 8 | - | - | 60 | 60 | 1 | 1961 015 |
| | Right, Sub., PC1, PC3 | 8 | - | - | - | 60 | 1 | 1878 260 |
| | Left, Sub., PC1, PC3 | 8 | - | - | - | 60 | 1 | 1878 261 |
| | PY1 | 8 | - | - | - | 60 | 2 | 1877 470 |
| 8-55-57 | SOCKET, Tail, Stop and Turn Signal Lamp | 6-8 | 60 | - | - | - | 2 | 1832 014 |
| | Except Sub., PC1, PC2, PC3 | 8 | - | - | 60 | 60 | 2 | 1658 343 |
| | w/BOOT, PC1 Sub., PC3 Sub., PY1 | 6-8 | - | 60 | - | 60 | 2 | 2096 410 |
| 8-55-194 | LENS, Inner BEZEL and GASKET PACKAGE, Quarter Panel Tail, Stop and Turn Signal Lamp, PD1, PD2 | 8 | - | 60 | - | - | 1 | 2084 066 |
| 8-55-195 | LENS, Quarter Panel Tail, Stop and Turn Signal Lamp, Right | 6-8 | 60 | - | - | - | 1 | 1960 888 |
| | Left | 6-8 | 60 | - | - | - | 1 | 1960 889 |
| | PD3, PD4 | 6-8 | - | 60 | - | - | 2 | 2093 023 |
| | w/Reflector BUTTON and CAP, Right | 8 | - | - | 60 | - | 1 | 1961 826 |
| | Left | 8 | - | - | 60 | - | 1 | 1961 827 |
| | w/REFLECTOR, Right, Sub., PC1, PC3 | 8 | - | - | - | 60 | 1 | 1961 326 |
| | Left, Sub., PC1, PC3 | 8 | - | - | - | 60 | 1 | 1961 327 |
| | Right, except Sub., PC1, PC2, PC3 | 8 | - | - | - | 60 | 1 | 1961 306 |
| | Left, except Sub., PC1, PC2, PC3 | 8 | - | - | - | 60 | 1 | 1961 307 |
| | w/COLLIMETER, PY1 | 8 | - | - | - | 60 | 2 | 1878 279 |
| 8-55-209 | SCREW, Quarter Panel Tail, Stop and Turn Signal Lamp Lens | 6-8 | 60 | - | - | - | 2 | 2093 742 |
| | | 6-8 | 60 | - | - | - | 2 | 2093 743 |
| | SCREW and WASHER, Lamp Housing | 6-8 | - | 60 | - | - | 6 | 9413 264 |
| | Sub., PD3, PD4 | 6-8 | - | 60 | - | - | ★ | *2093 374 |
| | SCREW, Lamp Outer Bezel, PD1, PD2 | 8 | - | 60 | - | - | 4 | 9414 025 |
| | SCREW, Lamp Lens | 8 | - | - | 60 | - | 4 | 6006 416 |
| | | 8 | - | - | 60 | - | 6 | 6006 427 |
| | Lower, Sub., PC1, PC3 | 8 | - | - | - | 60 | 2 | 6006 041 |
| | Sub., PC1, PC3 | 8 | - | - | - | 60 | 10 | 6006 416 |
| | Except Sub., PC1, PC2, PC3 | 8 | - | - | - | 60 | 12 | 6006 427 |
| | SCREW, Lamp Housing, Sub., PC1, PC3 | 8 | - | - | - | 60 | 4 | 9413 199 |
| | Sub., PC1, PC3 | 8 | - | - | - | 60 | 4 | 9413 211 |

★ Indicates use as required. Numerals in parentheses ( ) refer to notes. Printed in U.S.A.
⊟ Indicates parts not listed in any previous parts book. Prices and specifications subject to change without notice.
* Indicates change or addition.



MyMopar.com

| CODE | PART NAME AND DESCRIPTION | NO. OF CYL. | PLYMOUTH | DODGE | DESOTO | CHRYSLER AND IMPERIAL | PER CAR | PART NUMBER |
|---|---|---|---|---|---|---|---|---|
| **8-55-0** | **TAIL, STOP AND DIRECTIONAL SIGNAL LAMP - Cont'd** | | | | | | | |
| 8-55-214 | GASKET, Quarter Panel Tail, Stop and Turn Signal Lamp Lens | 6-8 | 60 | - | - | - | 2 | 1961 927 |
| | PD1, PD2 | 8 | - | 60 | - | - | 2 | 1961 048 |
| | | 8 | - | - | 60 | - | 2 | 2188 373 |
| | Except Sub., PC1, PC2, PC3 | 8 | - | - | - | 60 | 2 | 2188 372 |
| | Sub., PC1, PC3 | 8 | - | - | - | 60 | 2 | 2188 374 |
| | PY1 | 8 | - | - | - | 60 | 2 | 1878 281 |
| 8-55-219 | REFLECTOR PACKAGE, Tail, Stop, Turn Signal and Back-Up Lamp | 6-8 | 60 | - | - | - | 1 | 1881 736 |
| 8-55-220 | REFLECTOR, Gasket, Retainer and Bezel, Right, except Sub. | 6-8 | 60 | - | - | - | 1 | 1879 242 |
| | Left, except Sub. | 6-8 | 60 | - | - | - | 1 | 1879 243 |
| **8-56-0** | **BACK-UP LAMP** | | | | | | | |
| 8-56-1 | LAMP, Rear Bumper Back-Up, PD3, PD4 | 6-8 | - | 60 | - | - | 2 | 1961 711 |
| | PD1, PD2 | 8 | - | 60 | - | - | 2 | 1961 335 |
| | Quarter O/S Panel Back-Up, Right, except Sub., PC1, PC2, PC3 | 8 | - | - | - | 60 | 1 | 1960 170 |
| | Left | 8 | - | - | - | 60 | 1 | 1960 171 |
| | Rear Bumper Back-Up, Right, PY1 | 8 | - | - | - | 60 | 1 | 1961 450 |
| | Left | 8 | - | - | - | 60 | 1 | 1961 451 |
| 8-56-2 | SWITCH, PP1, PP2, PD4, w/318 cu. in. Eng., PD1, PD3, w/Std. Trans. | 6-8 | 60 | 60 | - | - | 1 | 1343 998 |
| | PP2 w/361 cu. in. Eng., PD2, PD4, w/383 cu. in. Eng., w/Std. Trans. | 8 | 60 | 60 | - | - | 1 | *2197 003 |
| | w/Auto. Trans. | 6-8 | 60 | 60 | 60 | 60 | 1 | 1972 052 |
| 8-56-3 | LAMP and GASKET PACKAGE, Quarter O/S Panel Back-Up, Right, Sub., PC1, PC3 | 8 | - | - | - | 60 | 1 | 2084 052 |
| | Left, Sub., PC1, PC3 | 8 | - | - | - | 60 | 1 | 2084 053 |
| 8-56-4 | J/NUT, Back-Up Lamp to Bumper, PY1 | 8 | - | - | - | 60 | 4 | 6022 142 |
| 8-56-7 | LENS, Quarter Panel Back-Up Lamp, Right, except Sub. | 6-8 | 60 | - | - | - | 1 | 1960 890 |
| | Left | 6-8 | 60 | - | - | - | 1 | 1960 891 |
| | Right, Sub. | 6-8 | 60 | - | - | - | 1 | 1960 892 |
| | Left | 6-8 | 60 | - | - | - | 1 | 1960 893 |
| | PD3, PD4 | 6-8 | - | 60 | - | - | 2 | 1961 665 |
| | LENS and FERRULE, Deck Opening Lower Panel Back-Up Lamp | 8 | - | - | 60 | - | 2 | 2094 291 |
| | Quarter O/S Panel Back-Up Lamp, PC1, PC2, PC3 | 8 | - | - | - | 60 | 2 | 1878 585 |
| | Rear Bumper Back-Up Lamp, Right, PY1 | 8 | - | - | - | 60 | 1 | 1961 434 |
| | Left | 8 | - | - | - | 60 | 1 | 1961 435 |
| 8-56-8 | LENS and Inner BEZEL PACKAGE, Back-Up Lamp, PD1, PD2 | 8 | - | 60 | - | - | 1 | 2084 262 |
| 8-56-9 | SEAL, Deck Opening Lower Panel Back-Up Lamp Lens Sealing | 8 | - | - | 60 | - | 1 | 1961 647 |
| 8-56-10 | SCREW, Quarter Panel Back-Up Lamp Lens to Housing, Inner, Sub. | 6-8 | 60 | - | - | - | 2 | 1961 965 |
| | Outer, Sub. | 6-8 | 60 | - | - | - | 2 | 1961 964 |
| 8-56-13 | NUT, Back-Up Lamp Lens Attaching, PC1, PC2, PC3 | 8 | - | - | - | 60 | 6 | ⊟6006 425 |
| 8-56-23 | GASKET, Quarter Panel Back-Up Lamp Lens, except Sub. | 6-8 | 60 | - | - | - | 2 | 1961 709 |
| | Sub. | 6-8 | 60 | - | - | - | 2 | 1961 954 |
| | PC1, PC2, PC3 | 8 | - | - | - | 60 | 4 | 1878 660 |
| | Rear Bumper Back-Up Lamp Lens to Housing, PY1 | 8 | - | - | - | 60 | 2 | 1961 452 |
| 8-56-25 | WASHER, Back-Up Lamp Attaching Sealing, Sub., PC1, PC3 | 8 | - | - | - | 60 | 4 | ⊟1961 352 |
| 8-56-30 | COVER, Rear Bumper Back-Up Lamp Opening, PD3, PD4 | 6-8 | - | 60 | - | - | 2 | 2094 083 |
| | PD1, PD2 | 8 | - | 60 | - | - | 2 | 2094 082 |



MyMopar.com

| CODE | PART NAME AND DESCRIPTION | NO. OF CYL. | PLYMOUTH | DODGE | DESOTO | CHRYSLER AND IMPERIAL | PER CAR | PART NUMBER |
|---|---|---|---|---|---|---|---|---|
| **8-56-0** | **BACK-UP LAMP Cont'd** | | | | | | | |
| 8-56-34 | SOCKET, except Sub. | 6-8 | 60 | - | - | - | 2 | 2096 938 |
| | Sub. | 6-8 | 60 | - | - | - | 2 | 1878 128 |
| | w/BOOT, PY1 | 6-8 | - | 60 | 60 | 60 | 2 | 2096 648 |
| | PC1, PC2, PC3 | 8 | - | - | - | 60 | 2 | 1841 697 |
| 8-56-36 | BEZEL and GASKET PACKAGE, Back-Up Lamp, PY1, Right | 8 | - | - | - | 60 | 1 | ⊟2240 731 |
| | Left, PY1 | 8 | - | - | - | 60 | 1 | ⊟2240 732 |
| 8-56-40 | GASKET, Rear Bumper Back-Up Lamp Housing | 6-8 | - | 60 | - | - | 2 | 1961 203 |
| 8-56-41 | SCREW, Deck Opening Lower Panel Back-Up Lamp Housing | 8 | - | - | 60 | - | 4 | *6006 493 |
| | Back-Up Lamp Attaching, Sub., PC1, PC3 | 8 | - | - | - | 60 | 4 | ⊟1961 349 |
| 8-56-43 | HOUSING, Deck Opening Lower Panel Back-Up Lamp | 8 | - | - | 60 | - | 2 | 1960 914 |
| 8-56-44 | GASKET, Quarter O/S Panel Back-Up Lamp Bezel, except Sub., PC1, PC2, PC3 | 8 | - | - | - | 60 | 2 | 1961 228 |
| | Sub., PC1, PC3 | 8 | - | - | - | 60 | 2 | 1961 256 |
| | Rear Bumper Back-Up Lamp Bezel, PY1 | 8 | - | - | - | 60 | 2 | 1961 448 |
| 8-56-46 | GASKET, Back-Up Lamp Switch, PD1, PD3, PD4, w/Std. Trans. | 8 | 60 | 60 | - | - | 1 | *1302 807 |
| | Transmission Back-Up Lamp Switch Hole Plug, PD1, PD3, PD4, w/Std. Trans. | 6-8 | 60 | 60 | - | - | 1 | *1302 807 |
| 8-56-60 | FUSE, Back-Up Lamp Wiring, 6 amp. | 8 | - | - | - | 60 | 1 | 147 683 |
| 8-56-66 | GASKET, Quarter Panel Back-Up Lamp Bracket, except Sub., w/Auto. Trans. | 6-8 | 60 | - | - | - | 2 | 1961 710 |
| | PP1L-M, PP2L-M, except Sub., w/Std. Trans. | 6-8 | 60 | - | - | - | 2 | 2093 003 |
| | PP1H, PP2H, except Sub., w/Std. Trans. | 6-8 | 60 | - | - | - | 2 | 1961 710 |
| **8-57-0** | **LICENSE PLATE LAMP** | | | | | | | |
| 8-57-10 | LAMP, Deck Opening Lower Panel License, except Sub., PC1, PC2, PC3 | 6-8 | 60 | - | 60 | 60 | 2 | 1878 196 |
| | Rear Bumper License, Sub., PC1, PC3 | 6-8 | 60 | 60 | - | 60 | 2 | 1960 118 |
| | Deck Lid License, except Sub. | 6-8 | - | 60 | - | - | 1 | 1878 196 |
| | Rear Bumper, License, PY1 | 8 | - | - | - | 60 | 1 | 1878 554 |
| 8-57-11 | SCREW, Deck Opening Lower Panel License Lamp, except Sub., PC1, PC2, PC3 | 6-8 | 60 | 60 | 60 | 60 | 2 | 1878 893 |
| | Deck Lid License Lamp, except Sub. | 6-8 | - | 60 | - | - | 2 | 1878 893 |
| 8-57-13 | SPEED NUT, PY1 | 8 | - | - | - | 60 | 2 | 6006 297 |
| 8-57-54 | LENS and GASKET PACKAGE, PY1 | 8 | - | - | - | 60 | 1 | 1879 566 |
| 8-57-55 | LENS, Rear Bumper License Lamp, Sub., PC1, PC3 | 6-8 | 60 | 60 | - | 60 | 2 | 1960 116 |
| 8-57-56 | GASKET, Rear Bumper License Lens to Bracket, Sub., PC1, PC3 | 6-8 | 60 | 60 | - | 60 | 2 | 1960 117 |
| 8-57-79 | SOCKET, License Lamp, except Sub. | 6-8 | 60 | 60 | - | - | 1 | 2096 140 |
| | Sub., PC1, PC3 | 6-8 | 60 | 60 | - | 60 | 2 | *2096 141 |
| | Except Sub., PC1, PC2, PC3 | 8 | - | - | 60 | 60 | 1 | *2096 141 |
| **8-58-0** | **STOP LAMP** | | | | | | | |
| 8-58-60 | SWITCH | 6-8 | 60 | 60 | 60 | 60 | 1 | 2084 284 |



MyMopar.com

| CODE | PART NAME AND DESCRIPTION | NO. OF CYL. | PLYMOUTH | DODGE | DESOTO | CHRYSLER AND IMPERIAL | PER CAR | PART NUMBER |
|---|---|---|---|---|---|---|---|---|

## NOTES



MyMopar.com

# GROUP 9 - ENGINE

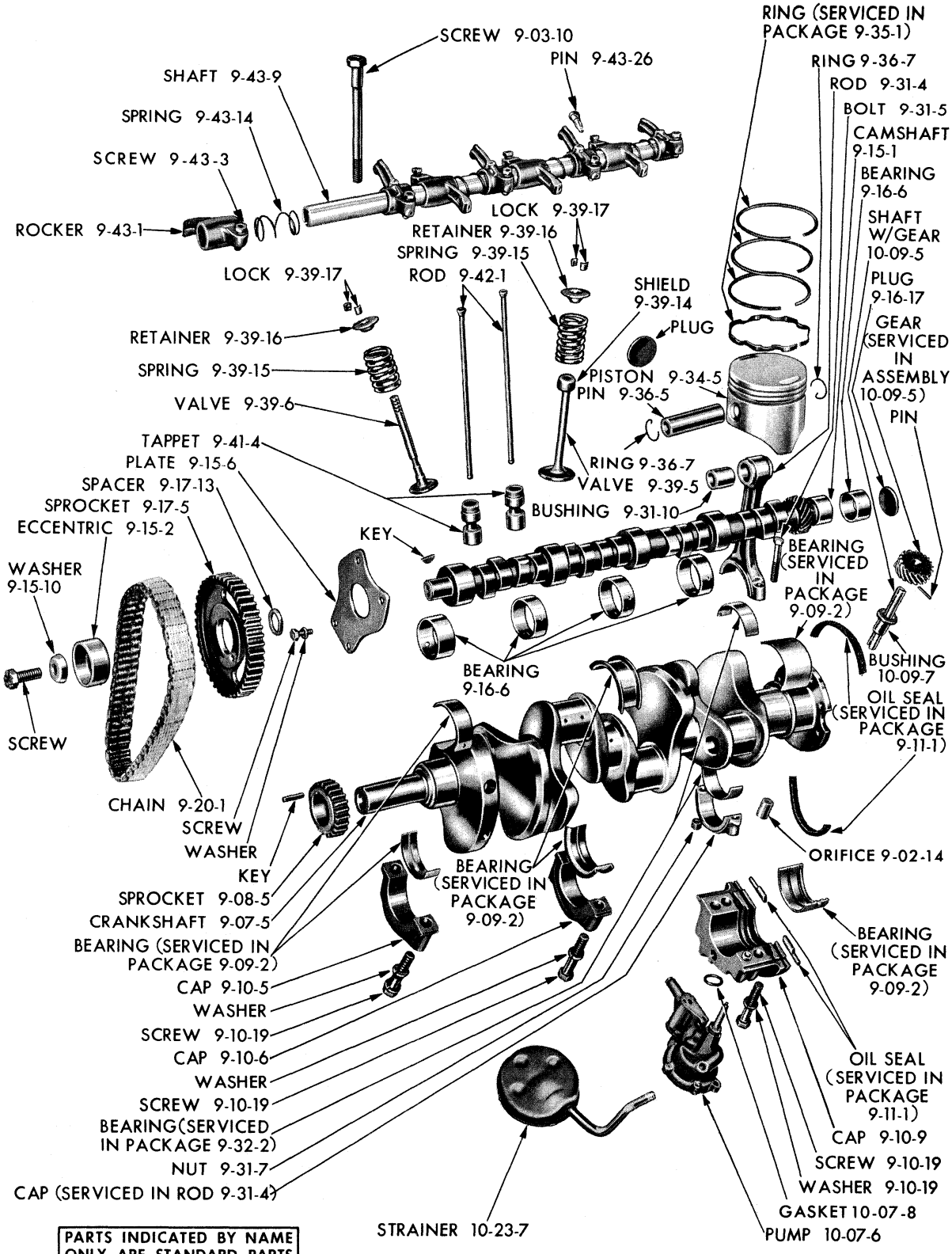


PARTS INDICATED BY NAME ONLY ARE STANDARD PARTS —ORDER BY DESCRIPTION.

19x6914C



MyMopar.com

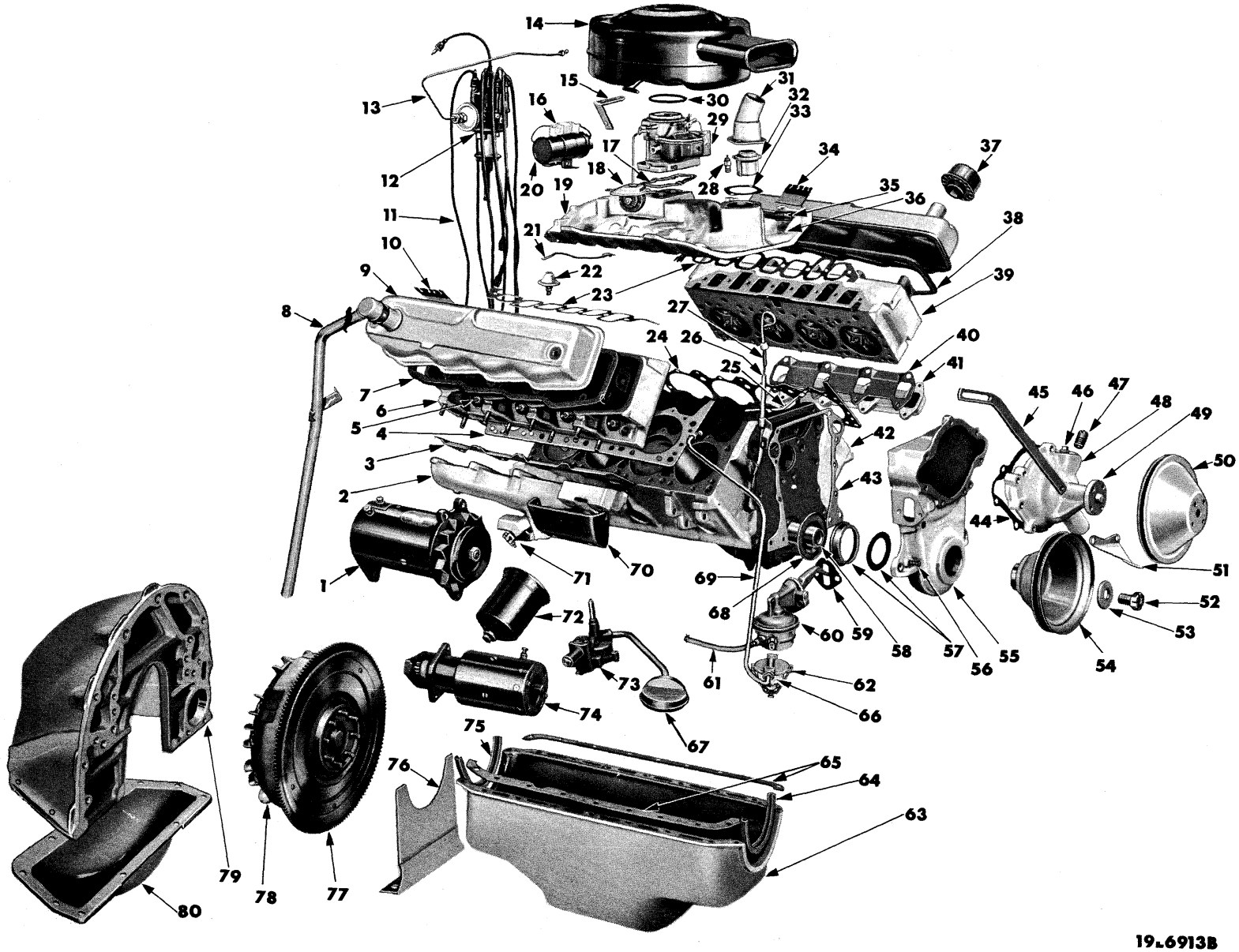


ENGINE - EXTERNAL PARTS - V8 CYLINDER (EXCEPT HIGH PERFORMANCE)

MyMopar.com

## ENGINE - EXTERNAL PARTS - V8 CYLINDER (EXCEPT HIGH PERFORMANCE)

| Ref. No. | Name | Part Type Code |
|---|---|---|
| 1 | Generator | 8-28-3 |
| 2 | Manifold | 9-48-6 |
| 3 | Gasket | 9-50-5 |
| 4 | Gasket | 9-03-5 |
| 5 | Spark Plug | 8-36-114 |
| 6 | Head | 9-03-4 |
| 7 | Gasket | 9-03-29 |
| 8 | Pipe | 10-02-15 |
| 9 | Cover | 9-03-28 |
| 10 | Bracket | 8-36-4 |
| 11 | Cable | 8-36-1 |
| 12 | Distributor | 8-27-1 |
| 13 | Tube | 8-27-320 |
| 14 | Air Cleaner | 14-29-2 |
| 15 | Bracket | 14-06-10 |
| 16 | Resistor | 8-35-22 |
| 17 | Gasket | 14-30-2 |
| 18 | Choke, w/Rod | 14-64-2 |
| 19 | Manifold | 9-48-7 |
| 20 | Coil | 8-35-4 |
| 21 | Gasket | 9-50-6 |
| 22 | Switch | 8-53-327 |
| 23 | Gasket | 9-50-6 |
| 24 | Gasket | 9-03-5 |
| 25 | Gasket | 9-50-6 |
| 26 | Tube | 10-03-7 |
| 27 | Indicator | 10-03-4 |
| 28 | Sending Unit | 8-37-155 |
| 29 | Carburetor | 14-30-1 |
| 30 | Gasket | 14-29-5 |
| 31 | Elbow | 9-05-5 |
| 32 | Thermostat | 7-41-4 |
| 33 | Gasket | 9-05-6 |
| 34 | Bracket | 8-36-4 |
| 35 | Nipple | 7-48-22 |
| 36 | Manifold | 9-48-6 |
| 37 | Air Cleaner | 10-01-21 |
| 38 | Gasket | 9-03-29 |
| 39 | Head | 9-03-4 |
| 40 | Gasket | 9-50-5 |
| 41 | Manifold | 9-48-6 |
| 42 | Block | |
| 43 | Gasket | 9-23-17 |
| 44 | Gasket | 7-44-3 |
| 45 | Strap | 8-28-15 |
| 46 | Plug | |
| 47 | Nipple | 7-48-22 |
| 48 | Pump Package | 7-42-1 |
| 49 | Hub | 7-05-1 |
| 50 | Pulley | 7-06-14 |
| 51 | Indicator | 9-23-40 |
| 52 | Screw | 9-07-8 |
| 53 | Washer | 9-07-22 |
| 54 | Pulley | 7-06-1 |
| 55 | Cover | 9-23-5 |
| 56 | Screw | 9-23-10 |
| 57 | Oil Seal | 9-23-18 |
| 58 | Crankshaft | 9-07-5 |
| 59 | Gasket | 14-74-1 |
| 60 | Pump | 14-73-2 |
| 61 | Hose | 14-89-57 |
| 62 | Filter | 14-67-1 |
| 63 | Pan | 10-24-4 |
| 64 | Gasket (serviced in package 10-24-1) | |
| 65 | Gasket (serviced in package 10-24-1) | |
| 66 | Bowl Package | 14-67-8 |
| 67 | Strainer | 10-23-7 |
| 68 | Oil Slinger | 9-07-17 |
| 69 | Tube | 14-85-1 |
| 70 | Bracket | 8-28-36 |
| 71 | Shield | 9-58-12 |
| 72 | Shell | 10-26-14 |
| 73 | Pump | 10-07-6 |
| 74 | Starting Motor | 8-52-4 |
| 75 | Gasket (serviced in package 10-24-1) | |
| 76 | Cover | 9-46-93 |
| 77 | Gear | 9-45-2 |
| 78 | Torque Converter | 9-46-4 |
| 79 | Housing | 9-46-90 |
| 80 | Pan | 9-46-137 |

PARTS INDICATED BY NAME ONLY - ORDER BY DESCRIPTION



MyMopar.com

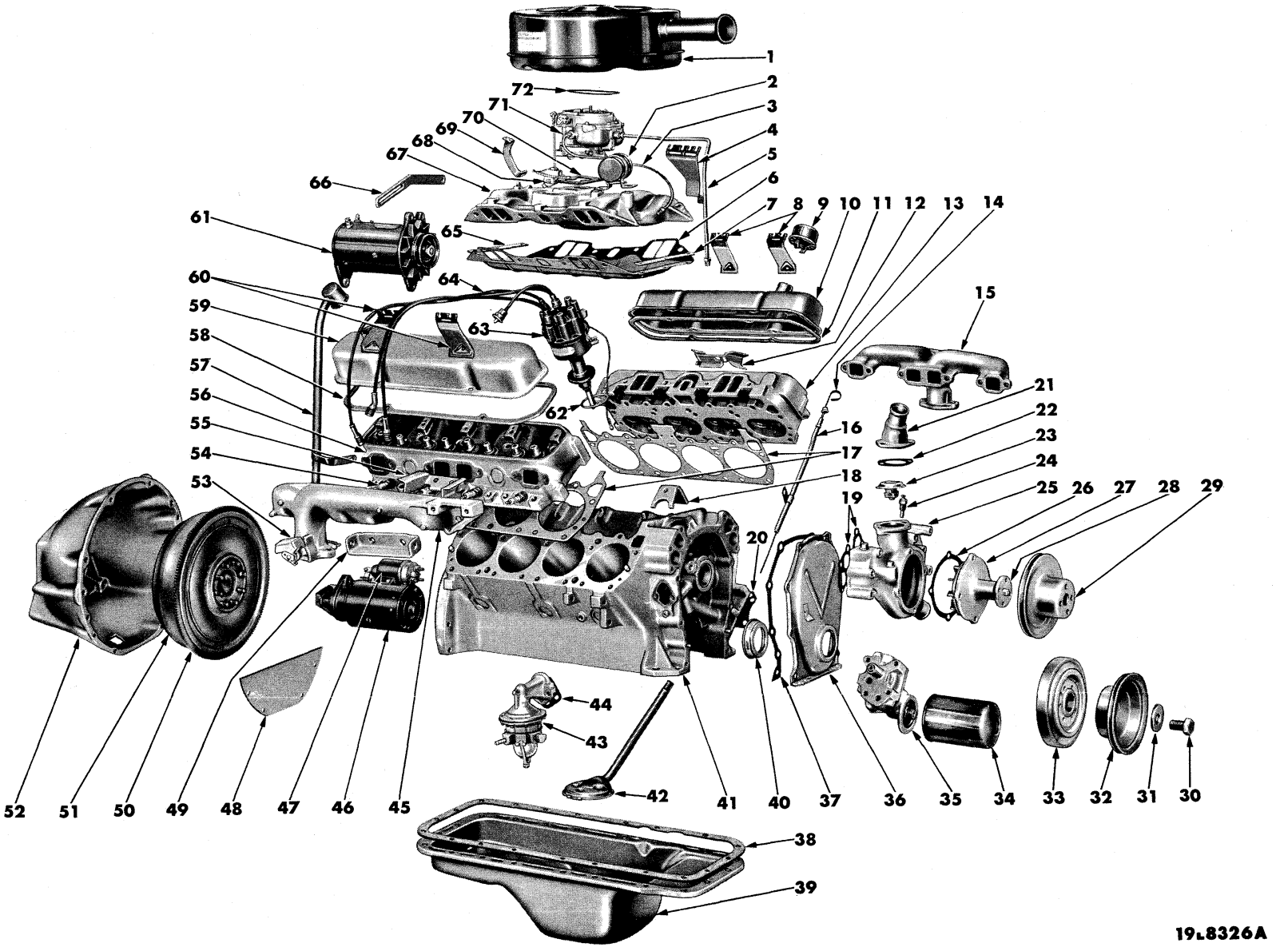


ENGINE - EXTERNAL PARTS - V8 CYLINDER (HIGH PERFORMANCE)

MyMopar.com

ENGINE - EXTERNAL PARTS - V8 CYLINDER (HIGH PERFORMANCE)

| Ref. No. | Name | Part Type Code |
|---|---|---|
| 1 | Air Cleaner | 14-29-2 |
| 2 | Coil | 8-35-4 |
| 3 | Tube | 8-77-320 |
| 4 | Bracket | 8-36-4 |
| 5 | Tube | 14-85-1 |
| 6 | Gasket | 9-50-6 |
| 7 | Reinforcement | 9-48-27 |
| 8 | Bracket | 8-36-4 |
| 9 | Air Cleaner | 10-01-21 |
| 10 | Cover | 9-03-28 |
| 11 | Gasket | 9-03-29 |
| 12 | Shield | 8-36-124 |
| 13 | Head | 9-03-4 |
| 14 | Indicator | 10-03-4 |
| 15 | Manifold | 9-48-6 |
| 16 | Tube | 10-03-7 |
| 17 | Gasket | 9-03-5 |
| 18 | Clamp | 8-27-26 |
| 19 | Gasket | 7-44-4 |
| 20 | Gasket | 10-07-11 |
| 21 | Elbow | 9-05-5 |
| 22 | Gasket | 9-05-6 |
| 23 | Thermostat | 7-41-4 |
| 24 | Fitting | |
| 25 | Housing | 7-43-1 |
| 26 | Gasket | 7-44-3 |
| 27 | Pump Package | 7-42-1 |
| 28 | Hub | 7-05-1 |
| 29 | Pulley | 7-06-14 |
| 30 | Screw | 9-07-8 |
| 31 | Washer | 9-07-22 |
| 32 | Pulley | 7-06-1 |
| 33 | Damper | 9-13-5 |
| 34 | Oil Filter | 10-26-6 |
| 35 | Pump | 10-07-6 |
| 36 | Cover | 9-23-5 |
| 37 | Gasket | 9-23-17 |
| 38 | Gasket | 10-24-8 |
| 39 | Pan | 10-24-4 |
| 40 | Oil Seal | 9-23-18 |
| 41 | Block (serviced in short engine 9-01-24) | |
| 42 | Strainer | 10-23-7 |
| 43 | Pump Package | 14-73-1 |
| 44 | Gasket | 14-74-1 |
| 45 | Manifold | 9-48-6 |
| 46 | Starter | 8-52-4 |
| 47 | Switch | 8-52-330 |
| 48 | Cover | 9-46-93 |
| 49 | Bracket | 8-28-36 |
| 50 | Gear | 9-45-2 |
| 51 | Torque Converter | 9-46-4 |
| 52 | Housing | 9-46-90 |
| 53 | Shield | 9-58-12 |
| 54 | Spark Plug | 8-36-114 |
| 55 | Shield | 8-36-124 |
| 56 | Head | 9-03-4 |
| 57 | Pipe | 10-02-15 |
| 58 | Gasket | 9-03-29 |
| 59 | Cover | 9-03-28 |
| 60 | Bracket | 8-36-4 |
| 61 | Generator | 8-28-3 |
| 62 | Retainer | 8-27-4 |
| 63 | Distributor | 8-27-1 |
| 64 | Cable Set | 8-36-1 |
| 65 | Reinforcement | 9-48-27 |
| 66 | Strap | 8-28-15 |
| 67 | Manifold | 9-48-7 |
| 68 | Choke | 14-64-2 |
| 69 | Bracket | 14-29-12 |
| 70 | Gasket | 14-34-2 |
| 71 | Carburetor | 14-30-1 |
| 72 | Gasket | 14-29-5 |

PARTS INDICATED BY NAME ONLY - ORDER BY DESCRIPTION



MyMopar.com

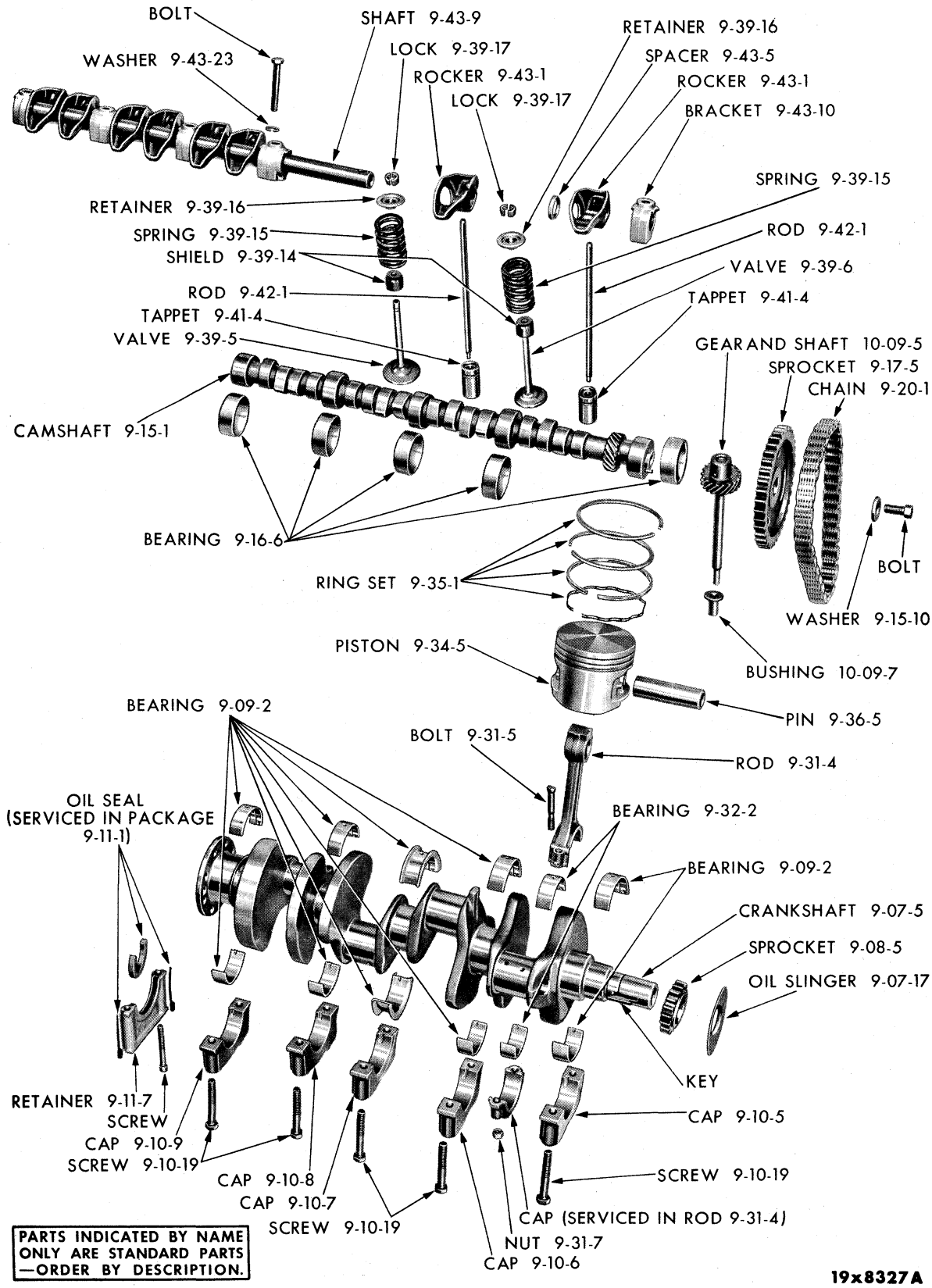
BOLT
WASHER 9-43-23
SHAFT 9-43-9
LOCK 9-39-17
ROCKER 9-43-1
LOCK 9-39-17
RETAINER 9-39-16
SPACER 9-43-5
ROCKER 9-43-1
BRACKET 9-43-10
SPRING 9-39-15
RETAINER 9-39-16
SPRING 9-39-15
SHIELD 9-39-14
ROD 9-42-1
VALVE 9-39-6
TAPPET 9-41-4
ROD 9-42-1
TAPPET 9-41-4
VALVE 9-39-5
GEAR AND SHAFT 10-09-5
SPROCKET 9-17-5
CHAIN 9-20-1
CAMSHAFT 9-15-1
BEARING 9-16-6
RING SET 9-35-1
BOLT
WASHER 9-15-10
PISTON 9-34-5
BUSHING 10-09-7
PIN 9-36-5
BEARING 9-09-2
BOLT 9-31-5
ROD 9-31-4
OIL SEAL (SERVICED IN PACKAGE 9-11-1)
BEARING 9-32-2
BEARING 9-09-2
CRANKSHAFT 9-07-5
SPROCKET 9-08-5
OIL SLINGER 9-07-17
KEY
RETAINER 9-11-7
SCREW
CAP 9-10-9
SCREW 9-10-19
CAP 9-10-8
CAP 9-10-7
SCREW 9-10-19
CAP 9-10-5
SCREW 9-10-19
CAP (SERVICED IN ROD 9-31-4)
NUT 9-31-7
CAP 9-10-6
PARTS INDICATED BY NAME ONLY ARE STANDARD PARTS —ORDER BY DESCRIPTION.
19x8327A



MyMopar.com

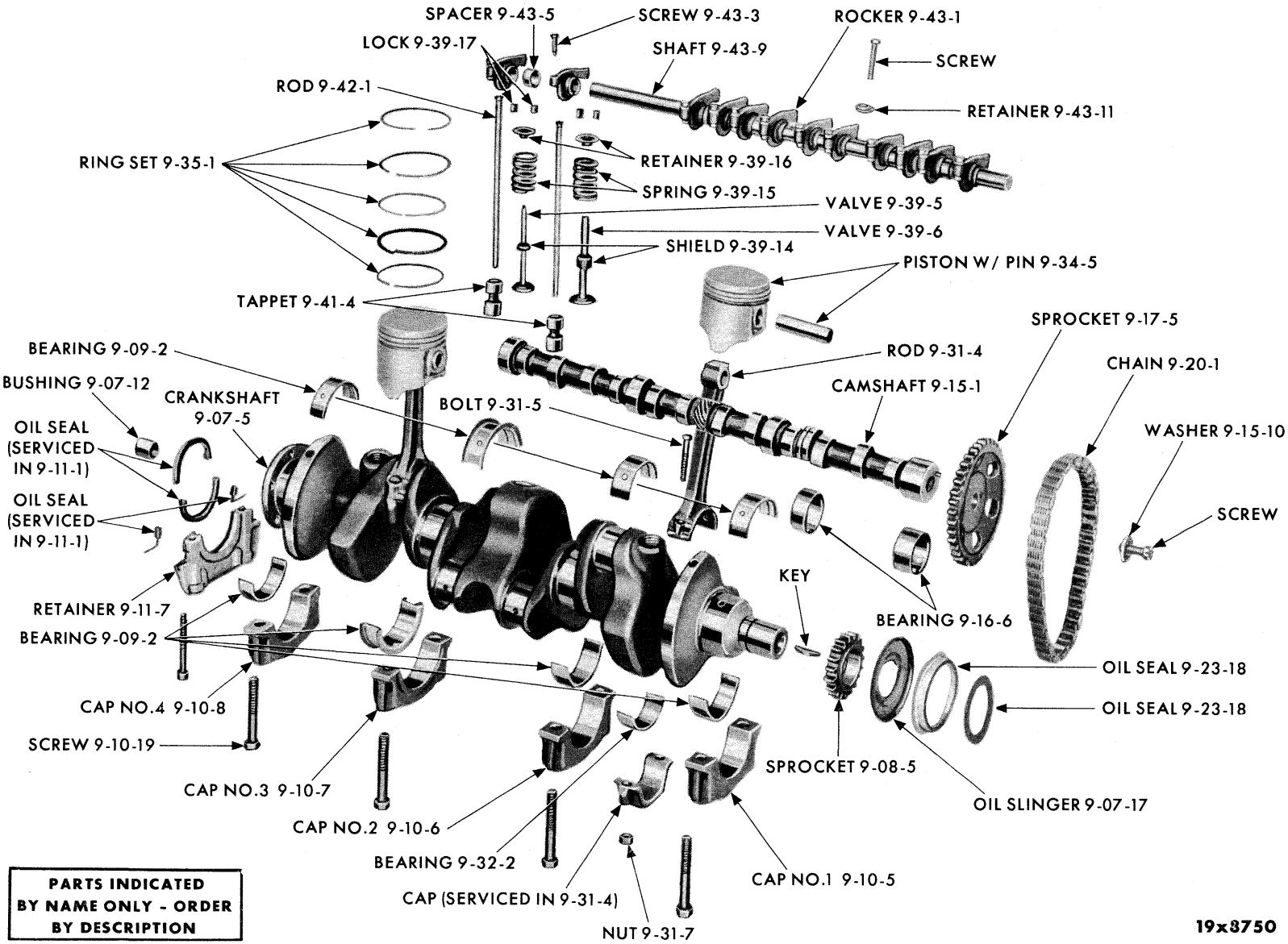


ENGINE - INTERNAL PARTS - 6 CYLINDER

MyMopar.com

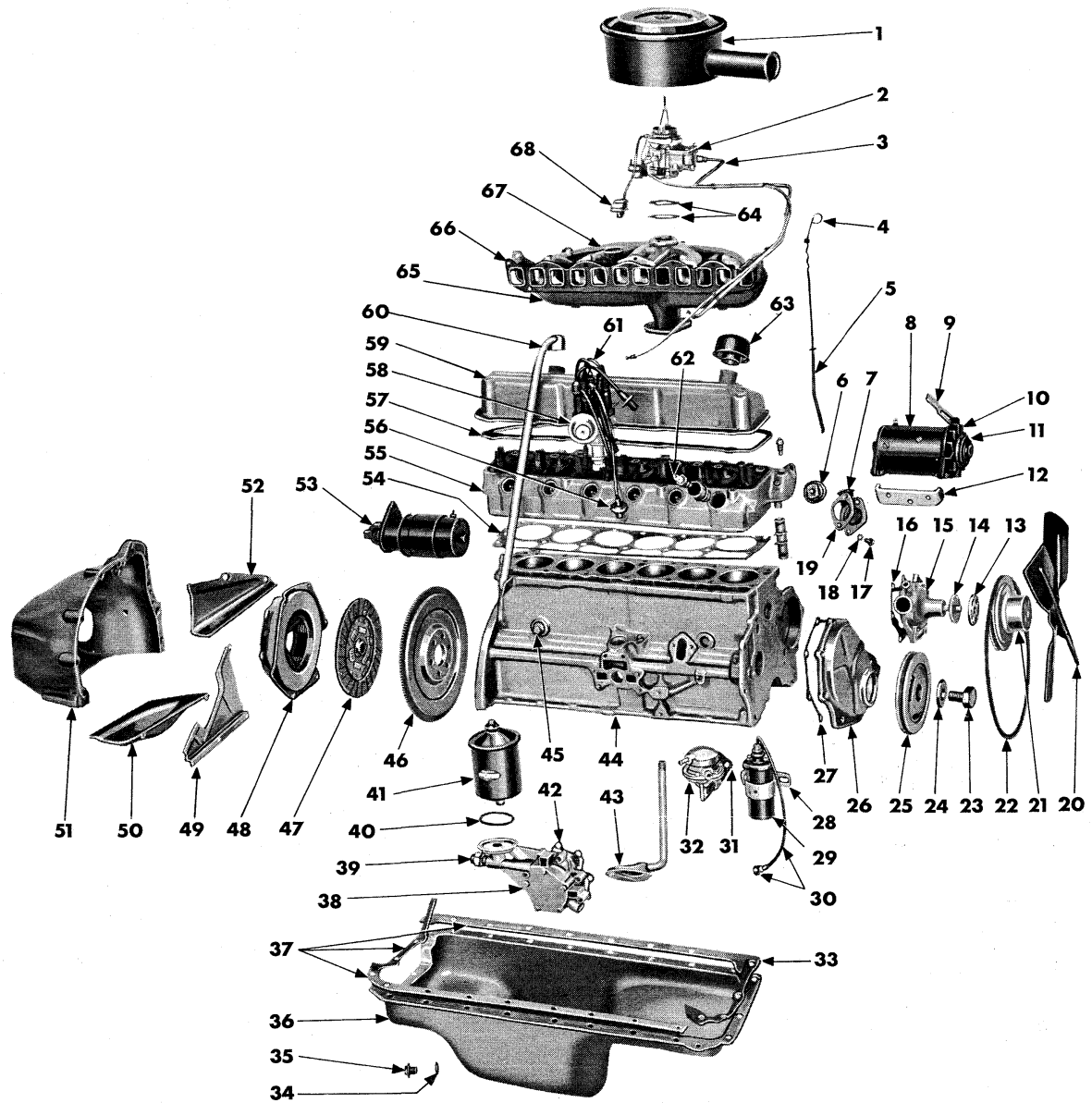


19L8794

ENGINE - EXTERNAL PARTS - 6 CYLINDER

MyMopar.com

## ENGINE - EXTERNAL PARTS - 6 CYLINDER

| Ref. No. | Name | Part Type Code |
|---|---|---|
| 1 | Air Cleaner | 14-29-2 |
| 2 | Carburetor | 14-30-1 |
| 3 | Tube | 14-89-2 |
| 4 | Indicator | 10-03-4 |
| 5 | Tube | 10-03-7 |
| 6 | Thermostat | 7-41-4 |
| 7 | Elbow | 9-05-5 |
| 8 | Generator | 8-28-3 |
| 9 | Strap | 8-28-15 |
| 10 | Fan | 8-28-299 |
| 11 | Pulley | 8-28-297 |
| 12 | Bracket | 8-28-36 |
| 13 | Spacer | 7-02-16 |
| 14 | Hub | 7-05-1 |
| 15 | Pump Package | 7-42-4 |
| 16 | Gasket | 7-44-4 |
| 17 | Screw | |
| 18 | Washer | |
| 19 | Gasket | 9-05-6 |
| 20 | Fan | 7-02-1 |
| 21 | Pulley | 7-06-14 |
| 22 | Belt | 7-03-1 |
| 23 | Screw | 9-07-8 |
| 24 | Washer | 9-07-22 |
| 25 | Damper | 9-13-5 |
| 26 | Cover | 9-23-5 |
| 27 | Gasket | 9-23-17 |
| 28 | Bracket | 8-35-41 |
| 29 | Coil | 8-35-4 |
| 30 | Cable | 8-36-49 |
| 31 | Gasket | 14-74-1 |
| 32 | Pump Package | 14-73-1 |
| 33 | Gasket | 10-24-1 |
| 34 | Gasket | 10-24-38 |
| 35 | Plug | 10-24-37 |
| 36 | Pan | 10-24-4 |
| 37 | Gasket (Serviced in 10-26-1) | |
| 38 | Pump | 10-07-6 |
| 39 | Cap | 10-22-40 |
| 40 | Gasket (Serviced in 10-26-6) | |
| 41 | Filter | 10-26-6 |
| 42 | Gasket | 10-07-11 |
| 43 | Strainer | 10-23-7 |
| 44 | Block | 9-02-5 |
| 45 | Plug | |
| 46 | Flywheel | 9-45-1 |
| 47 | Disc | 6-13-1 |
| 48 | Cover, w/Plate | 6-14-1 |
| 49 | Seal | 6-10-10 |
| 50 | Pan | 6-10-2 |
| 51 | Housing | 6-09-1 |
| 52 | Strut | 6-09-11 |
| 53 | Starter | 8-52-4 |
| 54 | Gasket | 9-03-5 |
| 55 | Head | 9-03-4 |
| 56 | Cover | 8-36-117 |
| 57 | Gasket | 9-03-29 |
| 58 | Distributor | 8-27-1 |
| 59 | Cover | 9-03-28 |
| 60 | Pipe | 10-02-15 |
| 61 | Cable Set | 8-36-1 |
| 62 | Spark Plug | 8-36-114 |
| 63 | Air Cleaner | 10-01-21 |
| 64 | Gasket | 14-30-2 |
| 65 | Manifold | 9-48-6 |
| 66 | Gasket (Serviced in 9-50-1) | |
| 67 | Manifold | 9-48-7 |
| 68 | Choke | 14-39-45 |

PARTS INDICATED BY NAME ONLY - ORDER BY DESCRIPTION



MyMopar.com

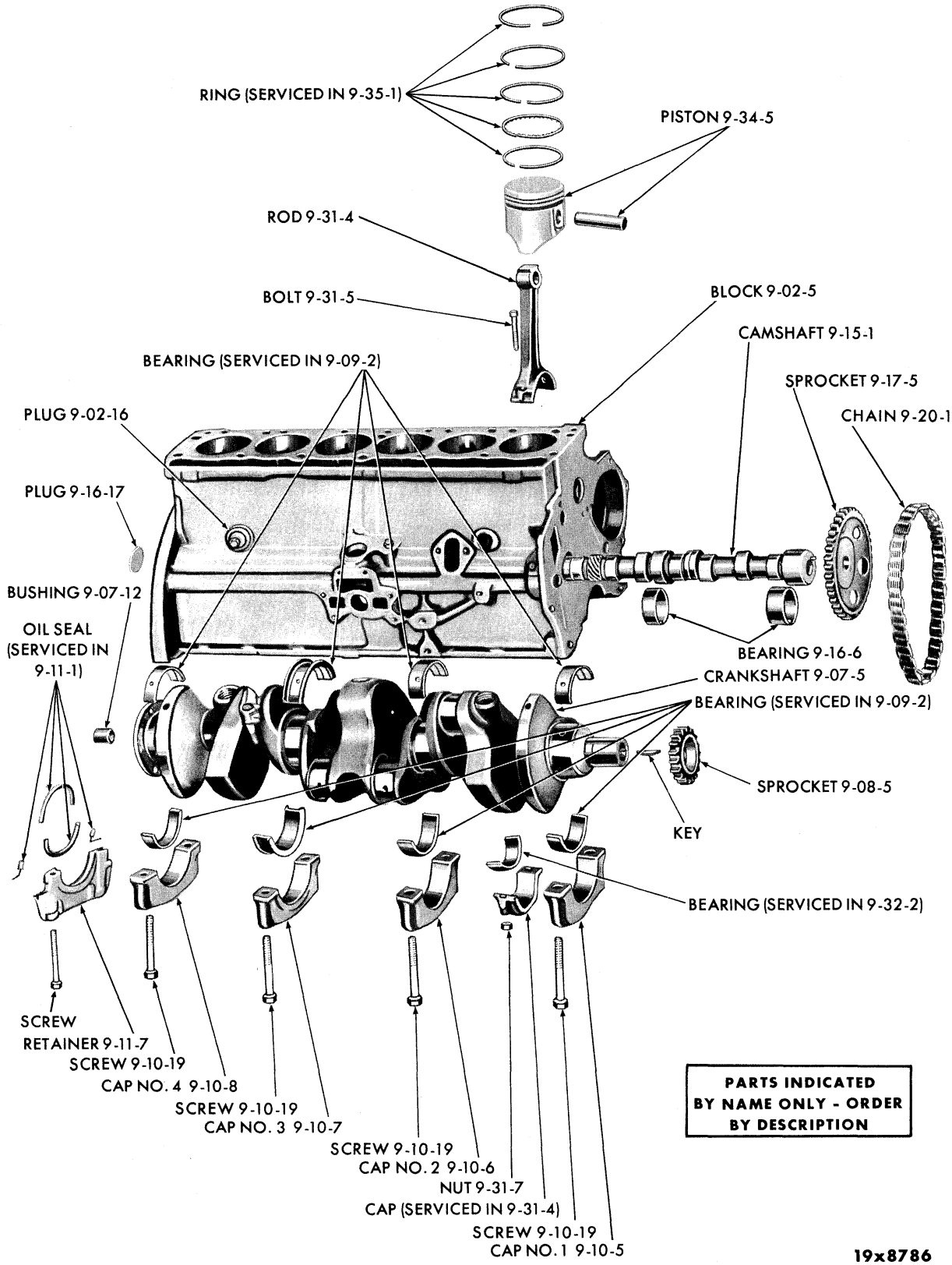


SHORT ENGINE - 6 CYLINDER



MyMopar.com

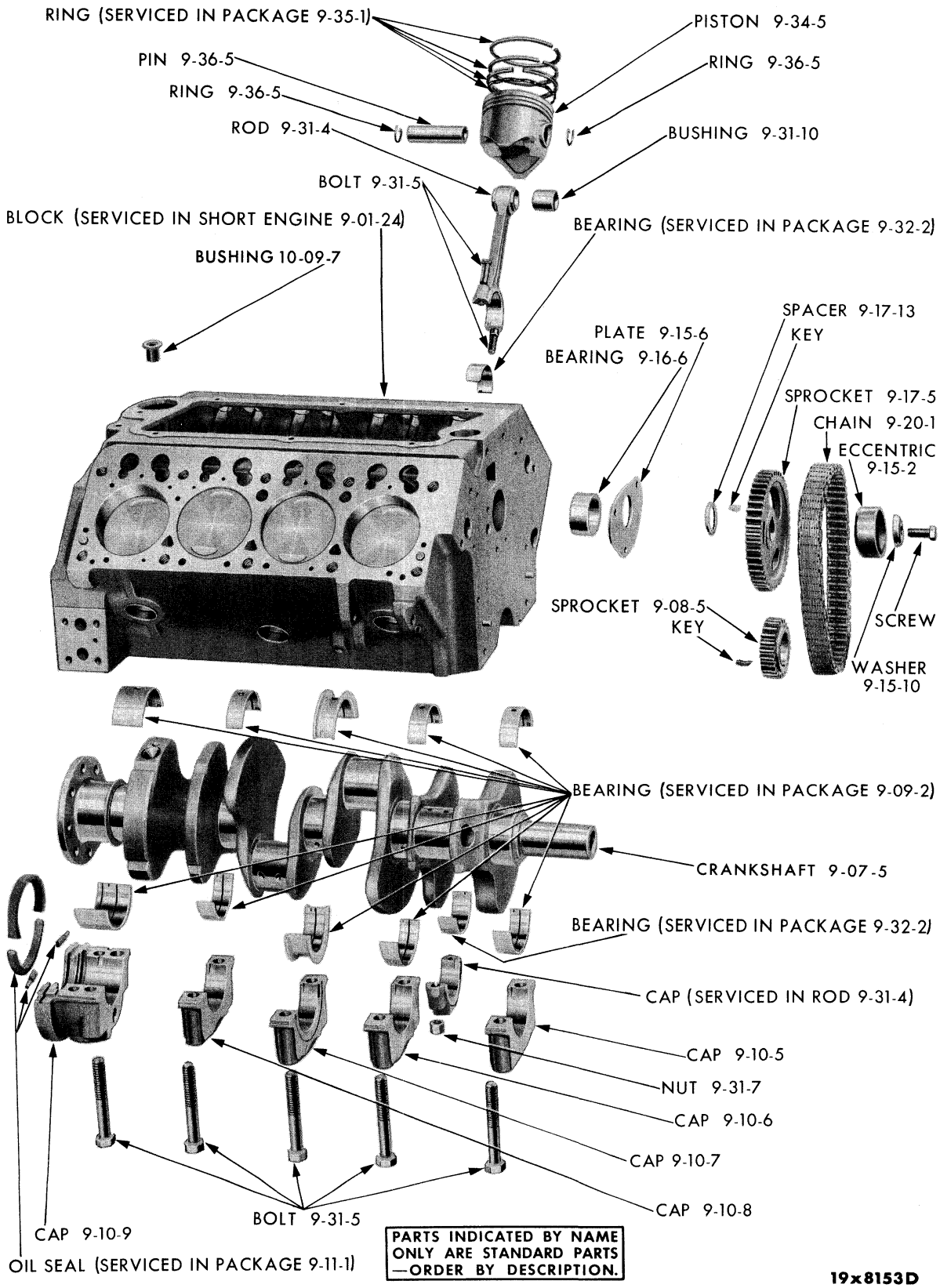


SHORT ENGINE - V8 CYLINDER



MyMopar.com

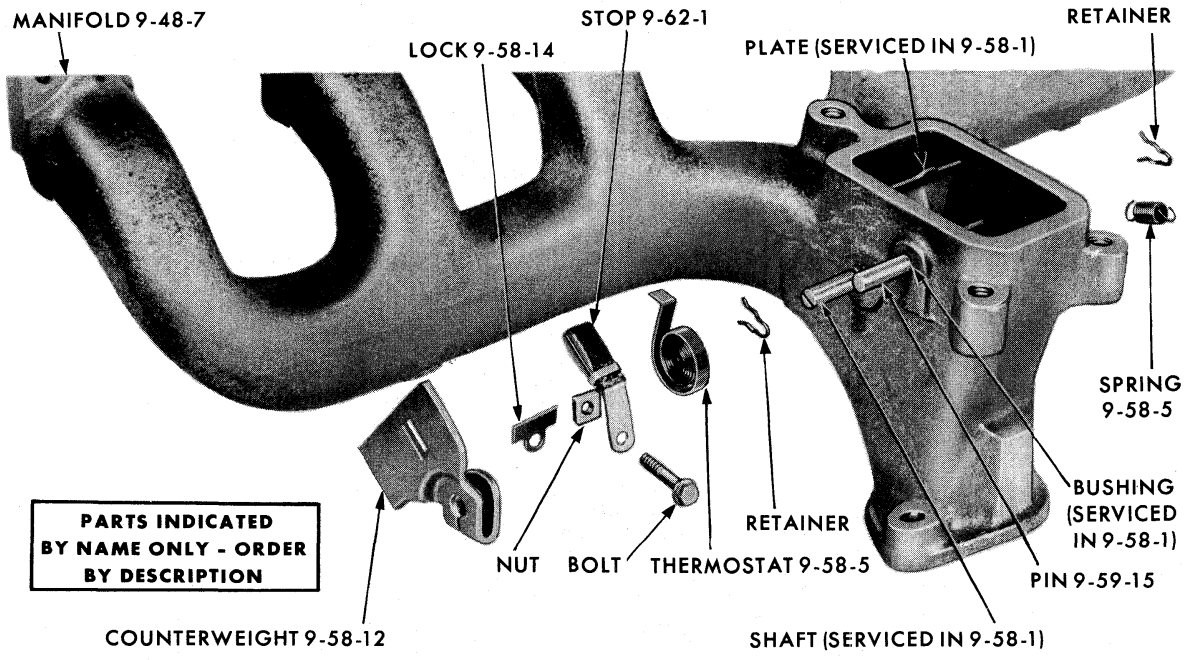


MANIFOLD HEAT CONTROLS - 6 CYLINDER

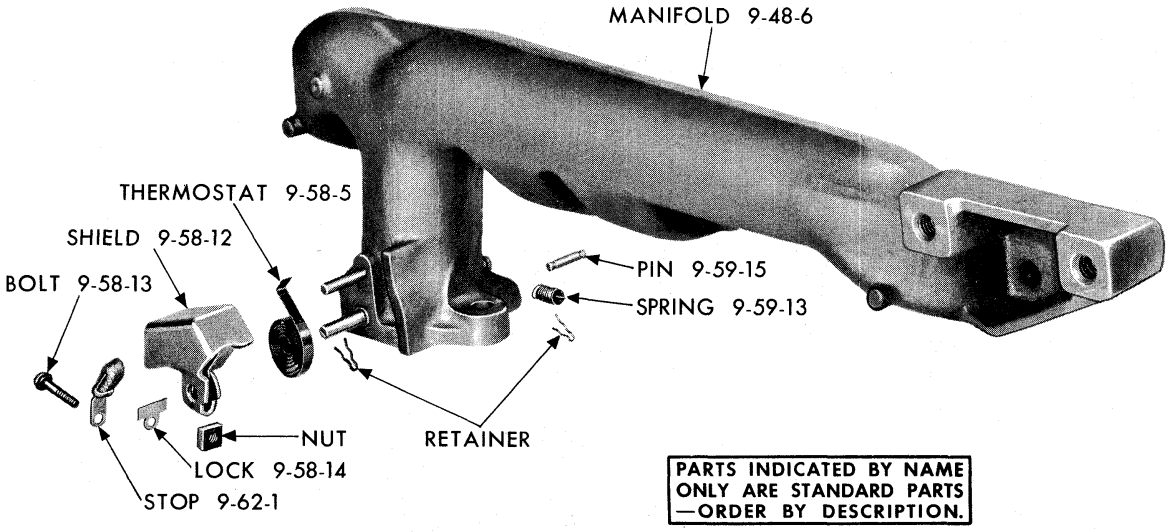


MANIFOLD HEAT CONTROLS - V8 CYLINDER



MyMopar.com

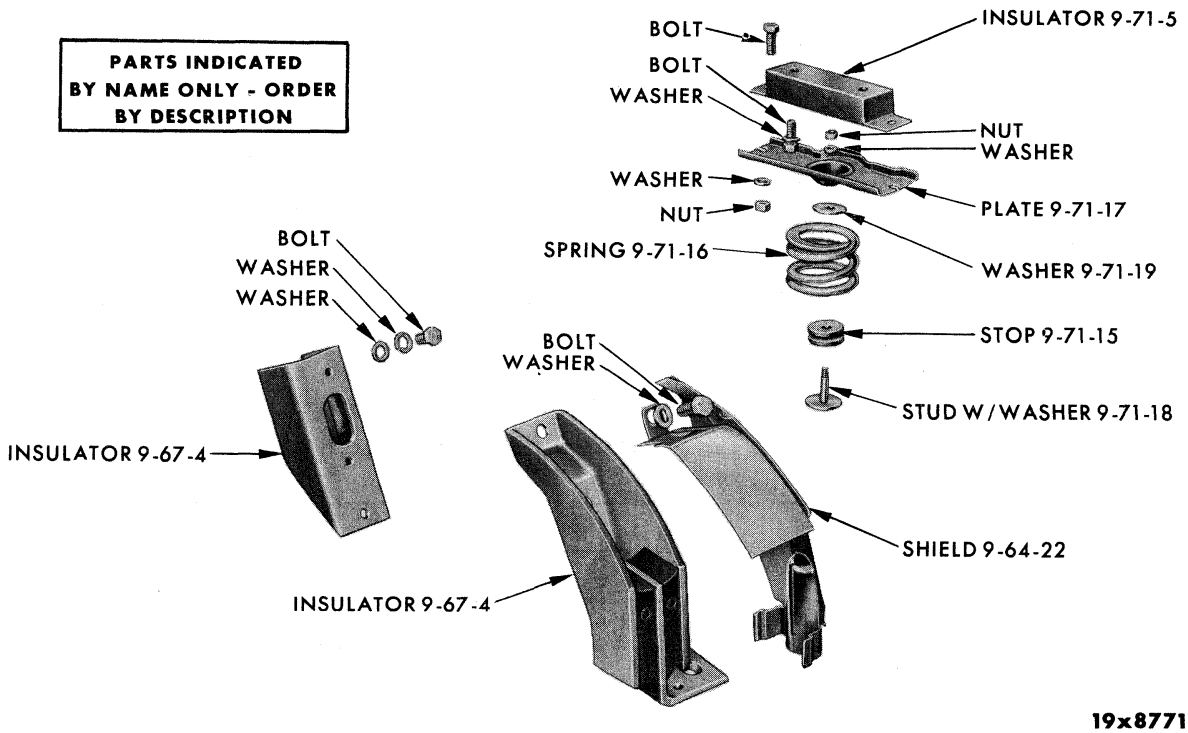


ENGINE MOUNTINGS - 6 CYLINDER

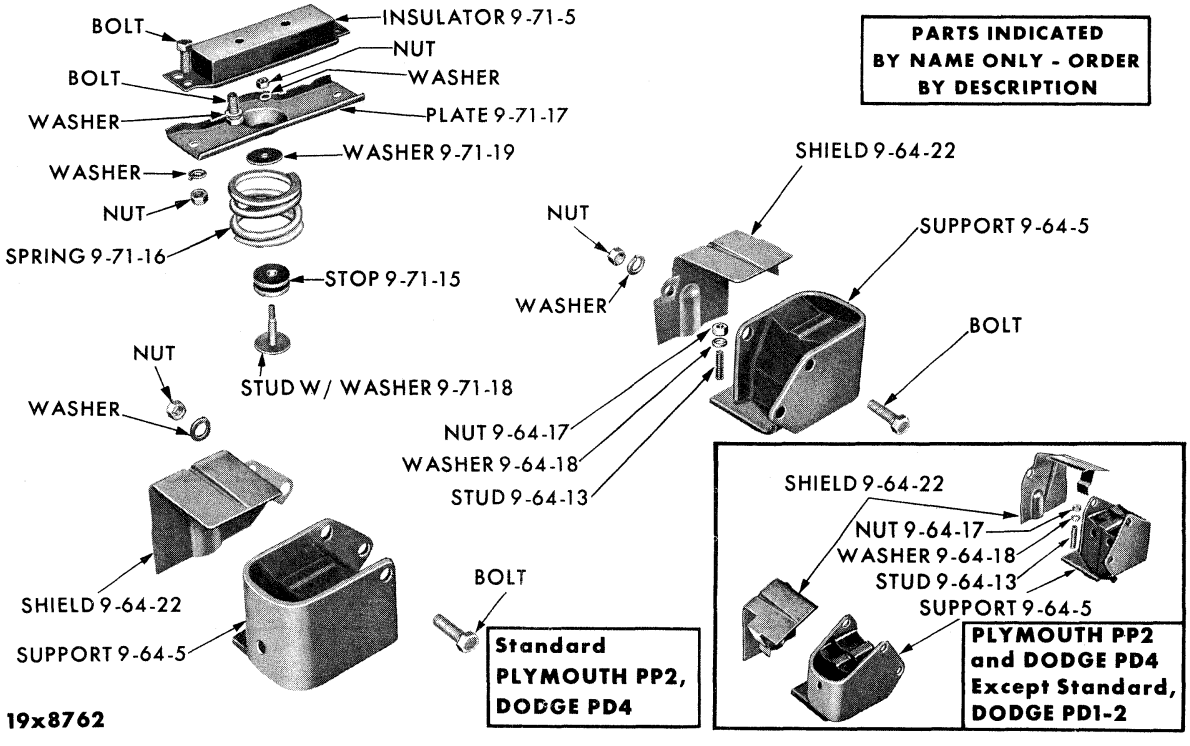


ENGINE MOUNTINGS - V8 CYLINDER


MyMopar.com

| CODE | PART NAME AND DESCRIPTION | NO. OF CYL. | PLYMOUTH | DODGE | DESOTO | CHRYSLER AND IMPERIAL | PER CAR | PART NUMBER |
|---|---|---|---|---|---|---|---|---|

## NOTES


MyMopar.com

# GROUP 9 - ENGINE

## 9-01-0 ENGINE ASSEMBLY

NOTE: The following symbols are used in connection with engine numbers:

Engine numbers without symbols indicate "Standard Cylinders and Crankshaft Bearings."
The Letter "A" immediately following the engine number indicated Bore .020" (.508 MM.) Larger than Standard.
The Letter "B" immediately following the engine number indicated Main and Connecting Rod Bearings .010" (.245 MM.) Smaller than Standard.
The Letters "AB" immediately following the engine number indicate Cylinder Bore .020" (.508 MM.) Larger than Standard and the Main and Connecting Rod Bearings .010" (.254 MM.) Smaller than Standard.

The letters in the circular pads at either end of the engine number are for the use of factory inspectors only and should not be connected with the engine number.
Always mention Serial Numbers when ordering major assemblies.

NOTE A: PC1 - Engine parts that are required for service on Chrysler Windsor model PC1 which has an engine stamping beginning with P38 - and starting with Serial No. 81 - 03167320 and intermittently to and including Serial No. 81-03168115 must be specified as a PS3 - DeSoto as listed.

PC2 - Engine parts that are required for service on Chrysler Saratoga PC2 which has a 413 cubic inch engine stamping beginning with P41 - and starting with Serial No. 82 - 0316884 and intermittently to and including Serial No. 82 - 03168116 must be specified as a New Yorker PC3 as listed.

| | CODE | PART NAME AND DESCRIPTION | NO. OF CYL. | PLYMOUTH | DODGE | DESOTO | CHRYSLER AND IMPERIAL | PER CAR | PART NUMBER |
|---|---|---|---|---|---|---|---|---|---|
| 9-01-5 | | GASKET SET | 6 | 60 | 60 | - | - | 1 | 2196 045 |
| | | PD4, UP TO | 8 | 60 (1) | 60 (1) | - | - | 1 | 2084 225 |
| | | PD4, AFTER | 8 | 60 (1) | 60 (1) | - | - | 1 | 2196 087 |
| | | PP2 w/High Performance, PP2 w/Ram Manifold, PD4-D500, PD4 w/High Performance, PD1, PD2 | 8 | 60 | 60 | 60 | - | 1 | 1879 701 |
| | | | | - | - | - | 60 (A) | 1 | *1879 702 |

NOTE: Short Engine Assemblies consist of: The Cylinder Block with Pistons and Rings, Crankshaft and Bearings, Connecting Rods and Bearings, Camshaft and Bearings, Camshaft Thrust Plate, Camshaft and Crankshaft Sprockets and Timing Chain. On the 8 Cylinder Short Engine Assemblies some of the above parts have been left off to obtain a greater interchangeability.

| | | | | | | | | | |
|---|---|---|---|---|---|---|---|---|---|
| 9-01-24 | | SHORT ENGINE, w/Standard Trans. | 6 | 60 | 60 | - | - | 1 | 2128 793 |
| | | w/Automatic Trans. | 6 | 60 | 60 | - | - | 1 | 2128 795 |
| | | w/Standard Trans., Export | 6 | 60 | 60 | - | - | 1 | 2128 794 |
| | | w/Automatic Trans., Export | 6 | 60 | 60 | - | - | 1 | ⊟2206 134 |
| | | PD4 | 8 | 60 | 60 | - | - | 1 | 1859 497 |
| | | PP2 w/High Performance, PP2 w/Ram Manifold, PD4-D500, PD4 Police Cars, PD1, PS1 w/361 cu. in. Engine | 8 | 60 | 60 | 60 | - | 1 | *1859 480 |
| | | PP2 Police Cars with one four Barrel Carburetor, two four Barrel Carburetors and w/Ram Manifold, PD1 w/High Performance, PD1-D500, PD1 Police Cars with one four Barrel Carburetor and with two four Barrel Carburetors, PD4 Police Cars with one four Barrel Carburetor, two four Barrel Carburetors and w/Ram Manifold, PD2, PS1 w/High Performance, PS1 w/Ram Manifold, PS1 w/Ram Manifold, PS3, w/383 cu. in. Engine | 8 | 60 | 60 | 60 | - | 1 | *2128 668 |

NOTE 1: Engine No. 65030.
NOTE A: See Note A

★ Indicates use as required. Numerals in parentheses ( ) refer to notes. Printed in U.S.A.
⊟ Indicates parts not listed in any previous parts book. Prices and specifications subject to change without notice.
* Indicates change or addition.



MyMopar.com

| CODE | PART NAME AND DESCRIPTION | NO. OF CYL. | PLYMOUTH | DODGE | DESOTO | CHRYSLER AND IMPERIAL | PER CAR | PART NUMBER |
|---|---|---|---|---|---|---|---|---|
| **9-01-0** | **ENGINE ASSEMBLY - Cont'd** | | | | | | | |
| 9-01-24 | SHORT ENGINE - Cont'd | | | | | | | |
| | PC1 w/Standard Trans. | 8 | - | - | - | 60 | 1 | 2129 903 |
| | PC1, PC2 w/Automatic Trans. | 8 | - | - | - | 60 (A) | 1 | *1859 488 |
| | PC3, PY1, PC3-300 | 8 | - | - | - | 60 (A) | 1 | *1859 492 |
| | Export PD4 | 8 | 60 | 60 | - | - | 1 | 1859 499 |
| | Export PS1, PD1, PD2 RHD. | 8 | - | 60 | 60 | - | 1 | 1859 482 |
| | Export PD2 LHD. PS1, PS3 | 8 | - | 60 | 60 | - | 1 | 1859 486 |
| | Export PC1, PC2, w/Automatic Trans. | 8 | - | - | - | 60 | 1 | 1859 490 |
| | Export PC1 w/Standard Trans. | 8 | - | - | - | 60 | 1 | 2129 904 |
| | Export PC3, PY1 | 8 | - | - | - | 60 | 1 | 1859 494 |
| **9-02-0** | **CYLINDER BLOCK** | | | | | | | |
| 9-02-5 | BLOCK, w/PISTONS and RINGS | 6 | 60 | 60 | - | - | 1 | 2128 555 |
| | L.C., Export | 6 | 60 | 60 | - | - | 1 | 2128 556 |
| 9-02-7 | DOWEL, Cylinder Block to Clutch Housing or Torque Converter Housing | 8 | 60 | 60 | 60 | 60 | 2 | 1122 532 |
| 9-02-9 | DOWEL, Cylinder Block to Bearing Cap, PD4. | 8 | 60 | 60 | - | - | 1 | 1408 853 |
| 9-02-14 | ORIFICE, Oil Line, PD4 | 8 | 60 | 60 | - | - | 1 | 1821 557 |
| 9-02-16 | PLUG, Core Hole | 6 | 60 | 60 | - | - | 1 | 2121 197 |
| | | 6 | 60 | 60 | - | - | 4 | 2121 198 |
| | | 8 | 60 | 60 | 60 | 60 | 6 | 1821 721 |
| **9-03-0** | **CYLINDER HEAD** | | | | | | | |
| 9-03-4 | HEAD, w/Core Hole PLUG, UP TO | 6 | 60 (2) | 60 (2) | - | - | 1 | *2121 236 |
| | AFTER | 6 | 60 (2) | 60 (2) | - | - | 1 | ⊟2205 848 |
| | PD4 | 8 | 60 | 60 | - | - | 2 | 1733 932 |
| | PP2 w/High Performance, PP2 w/Ram Manifold, PD4 Police Cars, PD1, PS1, PC1, PC2 | 8 | 60 | 60 | 60 | 60 (A) | 2 | *2128 553 |
| | PP2 Police Cars , PD4 w/High Performance, PD4-D500, PD1-D500, PD1 w/High Performance, PD2, PS1 w/High Performance, PS1 w/Ram Manifold, PS3, PC3, PY1 | 8 | - | 60 | 60 | 60 (A) | 2 | *2128 589 |
| 9-03-5 | GASKET | 6 | 60 | 60 | - | - | 1 | 1947 578 |
| | PD4 | 8 | 60 | 60 | - | - | 2 | 1947 354 |
| | PP2 w/High Performance, PP2 w/Ram Manifold, PP2 Police Cars, PD1, PD2, PD4 w/High Performance, PD4-D500 | 8 | 60 | 60 | 60 | 60 | 2 | 1851 579 |
| 9-03-10 | SCREW | 6 | 60 | 60 | - | - | 14 | 1947 687 |
| | Short, PD4 | 8 | 60 | 60 | - | - | 10 | 1618 695 |
| | Long, PD4 | 8 | 60 | 60 | - | - | 10 | 1618 696 |
| | Short, PP2 w/High Performance, PP2 w/Ram Manifold, PP2 Police Cars, PD1, PD2, PD4 w/High Performance, PD4-D500 | 8 | 60 | 60 | 60 | 60 | 24 | 1739 605 |
| | Long, PP2 w/High Performance, PP2 w/Ram Manifold, PP2 Police Cars, PD1, PD2, PD4 w/High Performance, PD4-D500 | 8 | 60 | 60 | 60 | 60 | 10 | 1739 606 |
| 9-03-18 | PLUG, Cylinder Head Core Hole, PP2 w/High Performance, PP2 w/Ram Manifold, PD4-D500, PD4 w/High Performance, PD1, PD2 . | 8 | 60 | 60 | 60 | 60 | 4 | 1551 067 |
| 9-03-28 | COVER, UP TO | 6 | 60 (2) | 60 (2) | - | - | 1 | *2121 469 |
| | AFTER | 6 | 60 (2) | 60 (2) | - | - | 1 | ⊟2129 617 |
| | Right, PD4 UP TO | 8 | 60 (1) | 60 (1) | - | - | 1 | 1859 432 |
| | Left, PD4 UP TO | 8 | 60 (1) | 60 (1) | - | - | 1 | 1945 506 |
| | Right, PD4 AFTER | 8 | 60 (1) | 60 (1) | - | - | 1 | 2128 404 |
| | Left, PD4 AFTER | 8 | 60 (1) | 60 (1) | - | - | 1 | 2128 405 |
| | PP2 w/High Performance, PP2 w/Ram Manifold, PP2 Police Cars, PD1, PD2, PD4 w/High Performance, PD4-D500, PD4 Police Cars, Left | 8 | 60 | 60 | 60 | 60 | 1 | *1851 924 |

NOTE 1: Engine No. 65030.

NOTE 2: Engine No. P22-6-6.

NOTE A: See Page 9-7.

★ Indicates use as required. Numerals in parentheses ( ) refer to notes. Printed in U.S.A.

⊟ Indicates parts not listed in any previous parts book. Prices and specifications subject to change without notice.

Dec. 9, 1960 Supersedes April 20, 1960. Page 9-8 * Indicates change or addition.

MyMopar.com

| CODE | PART NAME AND DESCRIPTION | NO. OF CYL. | PLYMOUTH | DODGE | DESOTO | CHRYSLER AND IMPERIAL | PER CAR | PART NUMBER |
|---|---|---|---|---|---|---|---|---|
| **9-03-0** | **CYLINDER HEAD - Cont'd** | | | | | | | |
| 9-03-28 | COVER - Cont'd | | | | | | | |
| | PP2 High Performance, PP2 Ram Manifold, PP2 Police Cars, PD1, PD2, PD4 w/High Performance, PD4-D500, PD4 Police Cars, Right | 8 | 60 | 60 | 60 | 60 | 1 | ⊟2205 836 |
| 9-03-29 | GASKET, Cover | 6 | 60 | 60 | - | - | 1 | 2121 244 |
| | PD4 AFTER | 8 | 60 | 60 | - | - | 2 | *2128 407 |
| | PP2 w/High Performance, PP2 w/Ram Manifold, PP2 Police Cars, PD1, PD2, PD4 w/High Performance, PD4-D500, PD4 Police Cars | 8 | 60 | 60 | 60 | 60 | 2 | 1821 440 |
| **9-05-0** | **CYLINDER HEAD WATER OUTLET ELBOW** | | | | | | | |
| 9-05-5 | ELBOW, w/o Power Steering | 6 | 60 | 60 | - | - | 1 | 2121 524 |
| | w/Power Steering | 6 | 60 | 60 | - | - | 1 | 2121 908 |
| | | 8 | 60 | 60 | 60 | 60 | 1 | 1855 393 |
| | w/Air Conditioning, PP2 w/High Performance, PP2 w/Ram Manifold, PD4-D500, PD4 w/High Performance, PD1, PD2 | 8 | 60 | 60 | 60 | 60 | 1 | 1855 605 |
| | w/Air Conditioning Model E | 8 | 60 | 60 | 60 | 60 | 1 | 1859 542 |
| 9-05-6 | GASKET, Cylinder Water Outlet Elbow | 6 | 60 | 60 | - | - | 1 | 1947 671 |
| | | 8 | 60 | 60 | 60 | 60 | 1 | 50 082 |
| **9-07-0** | **CRANKSHAFT** | | | | | | | |
| 9-07-5 | CRANKSHAFT, w/Std., Trans., UP TO | 6 | 60 (2) | 60 (2) | - | - | 1 | *2120 466 |
| | w/Automatic Trans., UP TO | 6 | 60 (2) | 60 (2) | - | - | 1 | *2120 774 |
| | AFTER | 6 | 60 (2) | 60 (2) | - | - | 1 | ⊟2202 488 |
| | PD4 | 8 | 60 | 60 | - | - | 1 | 1859 752 |
| | PP2 w/High Performance, PP2 w/Ram Manifold, PD1, PD2, PD4-D500, PD4 w/High Performance | 8 | 60 | 60 | 60 | - | 1 | 1851 869 |
| | w/Automatic Trans. | 8 | - | - | - | 60 (A) | 1 | *1851 527 |
| | w/Std. Trans., PC1 | 8 | - | - | - | 60 | 1 | 2129 735 |
| 9-07-8 | SCREW | 6 | 60 (1) | 60 (1) | - | - | 1 | 2128 569 |
| | w/Std. Trans., PD4 | 8 | 60 | 60 | - | - | 1 | 1821 414 |
| | w/Automatic Trans. | 8 | 60 | 60 | 60 | 60 | 1 | 1731 525 |
| | w/Air Condition Model E PD4 | 8 | 60 | 60 | - | - | 1 | 1821 177 |
| 9-07-12 | BUSHING, Crankshaft, Transmission Drive Pinion Pilot, PC1 | 6-8 | 60 | 60 | - | 60 | 1 | 53 298 |
| 9-07-17 | OIL SLINGER | 6-8 | 60 | 60 | 60 | 60 | 1 | 1618 686 |
| 9-07-22 | WASHER, Screw | 6-8 | 60 (1) | 60 (1) | 60 | 60 | 1 | 1855 561 |
| **9-08-0** | **CRANKSHAFT SPROCKET** | | | | | | | |
| 9-08-5 | SPROCKET | 6 | 60 | 60 | - | - | 1 | 1737 621 |
| | PD4 | 8 | 60 | 60 | - | - | 1 | 1632 280 |
| | PP2 w/High Performance, PP2 w/Ram Manifold, PD1, PD2, PD4-D500, PD4 w/High Performance | 8 | 60 | 60 | 60 | 60 | 1 | 1737 621 |

NOTE 1: UP TO Engine No. P22-1-27.

NOTE 2: Engine No. P22-5-31.

NOTE A: See Page 9-7.

★ Indicates use as required. Numerals in parentheses ( ) refer to notes. Printed in U.S.A.
⊟ Indicates parts not listed in any previous parts book. Prices and specifications subject to change without notice.
* Indicates change or addition.



MyMopar.com

## 9-09-0 CRANKSHAFT BEARING PACKAGES

NOTE: When .001 thicker wall crankshaft main bearings are used for engines in production an identification mark is stamped on the machined surface of the crankshaft center counterweight for six cylinder engines and No. 3 counterweight for V8 cylinder engines. When the thicker wall crankshaft bearings are used the crankshaft will be marked M1, M2, M3, M4 or M5 depending on which journal has the .001 thicker wall bearing.

NOTE: Crankshaft Bearing Packages consist of one upper and one lower bearing.

| CODE | PART NAME AND DESCRIPTION | NO. OF CYL. | PLYMOUTH | DODGE | DESOTO | CHRYSLER AND IMPERIAL | PER CAR | PART NUMBER |
|---|---|---|---|---|---|---|---|---|
| 9-09-2 | BEARING PACKAGE, No. 1 Std. | 6 | 60 | 60 | - | - | 2 | *2084 391 |
| | No. 3, Std. | 6 | 60 | 60 | - | - | 1 | 2084 399 |
| | Nos. 2 and 4, Std. | 6 | 60 | 60 | - | - | 1 | *2084 395 |
| | No. 1, .001 U/S | 6 | 60 | 60 | - | - | 2 | *2084 392 |
| | No. 3, .001 U/S | 6 | 60 | 60 | - | - | 1 | 2084 400 |
| | Nos. 2 and 4, .001 U/S | 6 | 60 | 60 | - | - | 1 | *2084 396 |
| | No. 1, .002 U/S | 6 | 60 | 60 | - | - | 2 | *2084 393 |
| | No. 3, .002 U/S | 6 | 60 | 60 | - | - | 1 | 2084 401 |
| | Nos. 2 and 4, .002 U/S | 6 | 60 | 60 | - | - | 1 | *2084 397 |
| | No. 1, .010 U/S | 6 | 60 | 60 | - | - | 2 | *2084 394 |
| | No. 3, .010 U/S | 6 | 60 | 60 | - | - | 1 | 2084 402 |
| | Nos. 2 and 4, .010 U/S | 6 | 60 | 60 | - | - | 1 | *2084 398 |
| | Nos. 1, 2 and 4, Std., PD4 | 8 | 60 | 60 | - | - | 3 | 2084 005 |
| | No. 3, Std., PD4 | 8 | 60 | 60 | - | - | 1 | 1879 627 |
| | No. 5, Std., PD4 | 8 | 60 | 60 | - | - | 1 | 1643 151 |
| | Nos. 1, 2 and 4, .001 U/S, PD4 | 8 | 60 | 60 | - | - | 3 | 2084 006 |
| | No. 3, .001 U/S, PD4 | 8 | 60 | 60 | - | - | 1 | 1879 628 |
| | No. 5, .001 U/S, PD4 | 8 | 60 | 60 | - | - | 1 | 1643 152 |
| | Nos. 1, 2 and 4, .002 U/S, PD4 | 8 | 60 | 60 | - | - | 3 | 2084 007 |
| | No. 3, .002 U/S, PD4 | 8 | 60 | 60 | - | - | 1 | 1879 629 |
| | No. 5, .002 U/S, PD4 | 8 | 60 | 60 | - | - | 1 | 1643 153 |
| | Nos. 1, 2 and 4, .003 U/S, PD4 | 8 | 60 | 60 | - | - | 3 | ⊟2275 387 |
| | No. 3, .003 U/S, PD4 | 8 | 60 | 60 | - | - | 1 | ⊟2275 389 |
| | Nos. 1, 2 and 4, .010 U/S, PD4 | 8 | 60 | 60 | - | - | 3 | 2084 008 |
| | No. 3, .010 U/S, PD4 | 8 | 60 | 60 | - | - | 1 | 1879 630 |
| | No. 5, .010 U/S, PD4 | 8 | 60 | 60 | - | - | 1 | 1643 155 |
| | Nos. 1, 2 and 4, .012 U/S, PD4 | 8 | 60 | 60 | - | - | 3 | ⊟2275 388 |
| | No. 3, .003 U/S, PD4 | 8 | 60 | 60 | - | - | 1 | ⊟2275 390 |
| | No. 1, Std., PP2 w/High Performance, PP2 w/Ram Manifold, PP2 Police Cars, PD1, PD2, PD4-D500, PD4 w/High Performance, PD4 Police Cars | 8 | 60 | 60 | 60 | - | 1 | 2084 810 |
| | Nos. 2, 4 and 5, Std., PP2 w/High Performance, PP2 w/Ram Manifold, PP2 Police Cars, PD4-D500, PD4 w/High Performance, PD4 Police Cars | 8 | 60 | 60 | 60 | - | 3 | 2084 833 |
| | No. 3, Std., PP2 w/High Performance, PP2 w/Ram Manifold, PD1, PD2, PD4-D500, PD4 w/High Performance | 8 | 60 | 60 | 60 | - | 1 | 1818 524 |
| | No. 1, .001 U/S, PP2 w/High Performance, PP2 w/Ram Manifold, PP2 Police Cars, PD1, PD2, PD4-D500, PD4 w/High Performance, PD4 Police Cars | 8 | 60 | 60 | 60 | - | 1 | 2084 811 |
| | Nos. 2, 4 and 5, .001 U/S, PP2 w/High Performance, PP2 w/Ram Manifold, PP2 Police Cars, PD1, PD2, PD4-D500, PD4 w/High Performance, PD4 Police Cars | 8 | 60 | 60 | 60 | - | 3 | 2084 834 |
| | No. 3, .001 U/S, PP2 w/High Performance, PP2 w/Ram Manifold, PD1, PD2, PD4-D500, PD4 w/High Performance | 8 | 60 | 60 | 60 | - | 1 | 1818 525 |
| | No. 1, .002 U/S, PP2 w/High Performance, PP2 w/Ram Manifold, PD1, PD2, PD4-D500, PD4 w/High Performance | 8 | 60 | 60 | 60 | - | 1 | 2084 812 |
| | Nos. 2, 4 and 5, .002 U/S, PP2 w/High Performance, PP2 w/Ram Manifold, PP2 Police Cars, PD1, PD2, PD4-D500, PD4 w/High Performance, PD4 Police Cars | 8 | 60 | 60 | 60 | - | 3 | 2084 835 |



MyMopar.com

| CODE | PART NAME AND DESCRIPTION | NO. OF CYL. | PLYMOUTH | DODGE | DESOTO | CHRYSLER AND IMPERIAL | PER CAR | PART NUMBER |
|---|---|---|---|---|---|---|---|---|
| **9-09-0** | **CRANKSHAFT BEARING PACKAGES - Cont'd** | | | | | | | |
| 9-09-2 | BEARING PACKAGE - Cont'd | | | | | | | |
| | No. 3, .002 U/S, PP2 w/High Performance, PP2 w/Ram Manifold, PD1, PD2, PD4-D500, PD4 w/High Performance | 8 | 60 | 60 | 60 | - | 1 | 1818 526 |
| | No. 1, .003 U/S, PP2 Police Cars, PP2 w/High Performance, PP2 w/Ram Manifold, PD1, PD2, PD4-D500, PD4 w/High Performance | 8 | 60 | 60 | 60 | - | 1 | ⊟2275 391 |
| | Nos. 2, 4 and 5, .003 U/S, PP2 w/High Performance, PP2 w/Ram Manifold, PP2 Police Cars, PD1, PD2, PD4-D500, PD4 w/High Performance | 8 | 60 | 60 | 60 | - | 3 | ⊟2275 393 |
| | No. 1, .010 U/S, PP2 w/High Performance, PP2 w/Ram Manifold, PD1, PD2, PD4-D500, PD4 w/High Performance | 8 | 60 | 60 | 60 | - | 1 | 2084 813 |
| | Nos. 2, 4 and 5, .010 U/S, PP2 w/High Performance, PP2 w/Ram Manifold, PP2 Police Cars, PD1, PD2, PD4-D500, PD4 w/High Performance, PD4 Police Cars | 8 | 60 | 60 | 60 | - | 3 | 2084 836 |
| | No. 3, .010 U/S, PP2 w/High Performance, PP2 w/Ram Manifold, PD1, PD2, PD4-D500, PD4 w/High Performance | 8 | 60 | 60 | 60 | - | 1 | 1818 528 |
| | No. 1, .012 U/S, PP2 w/High Performance, PP2 w/Ram Manifold, PP2 Police Cars, PD1, PD2, PD4-D500, PD4 w/High Performance | 8 | 60 | 60 | 60 | - | 1 | ⊟2275 392 |
| | Nos. 2, 4 and 5, .012 U/S, PP2 w/High Performance, PP2 Ram Manifold, PP2 Police Cars, PD1, PD2, PD4-D500, PD4 High Performance | 8 | 60 | 60 | 60 | - | 3 | ⊟2275 394 |
| | No. 1, Std. | 8 | - | - | - | 60 (A) | 1 | *2084 814 |
| | Nos. 2, 4 and 5 Std. | 8 | - | - | - | 60 (A) | 3 | *2084 829 |
| | No. 3, Std. | 8 | - | - | - | 60 (A) | 1 | *1879 378 |
| | No. 1, .001 U/S | 8 | - | - | - | 60 (A) | 1 | *2084 815 |
| | Nos. 2, 4 and 5, .001 U/S | 8 | - | - | - | 60 (A) | 3 | *2084 830 |
| | No. 3, .001 U/S | 8 | - | - | - | 60 (A) | 1 | *1879 379 |
| | No. 1, .002 U/S | 8 | - | - | - | 60 (A) | 1 | *2084 816 |
| | Nos. 2, 4 and 5, .002 U/S | 8 | - | - | - | 60 (A) | 3 | *2084 831 |
| | No. 3, .002 U/S | 8 | - | - | - | 60 (A) | 1 | *1879 380 |
| | No. 1, .003 U/S | 8 | - | - | - | 60 (A) | 1 | ⊟2275 395 |
| | Nos. 2, 4 and 5, .003 U/S | 8 | - | - | - | 60 (A) | 3 | ⊟2275 397 |
| | No. 1, .010 U/S | 8 | - | - | - | 60 (A) | 1 | *2084 817 |
| | Nos. 2, 4 and 5, .010 U/S | 8 | - | - | - | 60 (A) | 3 | *2084 832 |
| | No. 3, .010 U/S | 8 | - | - | - | 60 (A) | 1 | *1879 382 |
| | No. 1, .012 U/S | 8 | - | - | - | 60 (A) | 1 | ⊟2275 396 |
| | Nos. 2, 4 and 5, .012 U/S | 8 | - | - | - | 60 (A) | 3 | ⊟2275 398 |
| **9-10-0** | **CRANKSHAFT BEARING CAP** | | | | | | | |
| 9-10-2 | PACKAGE, Crankshaft Bearing, No. 5 Cap Oil Seal, PD4 | 8 | 60 | 60 | - | - | 1 | 1326 091 |
| 9-10-5 | CAP, No. 1 | 6 | 60 | 60 | - | - | 1 | 2084 403 |
| | PD4 | 8 | 60 | 60 | - | - | 1 | 1643 168 |
| | PP2 w/High Performance, PP2 w/Ram Manifold, PD1, PD2, PD4 w/High Performance, PD4-D500 | 8 | 60 | 60 | 60 | - | 1 | 1879 327 |
| | | 8 | - | - | - | 60 (A) | 1 | *1879 325 |
| 9-10-6 | CAP, No. 2 | 6 | 60 | 60 | - | - | 1 | 2084 403 |
| | PD4 | 8 | 60 | 60 | - | - | 1 | 1643 168 |
| | PP2 w/High Performance, PP2 w/Ram Manifold, PD1, PD2, PD4 w/High Performance, PD4-D500 | 8 | 60 | 60 | 60 | - | 1 | 1879 327 |
| | | 8 | - | - | - | 60 (A) | 1 | *1879 325 |

NOTE A: See Page 9-7.



MyMopar.com

| CODE | PART NAME AND DESCRIPTION | NO. OF CYL. | PLYMOUTH | DODGE | DESOTO | CHRYSLER AND IMPERIAL | PER CAR | PART NUMBER |
|---|---|---|---|---|---|---|---|---|
| **9-10-0** | **CRANKSHAFT BEARING CAP - Cont'd** | | | | | | | |
| 9-10-7 | CAP, No. 3 | 6 | 60 | 60 | - | - | 1 | 2084 405 |
| | PD4 | 8 | 60 | 60 | - | - | 1 | 1643 169 |
| | PP2 w/High Performance, PP2 w/Ram Manifold, PD1, PD2, PD4 w/High Performance, PD4-D500 | 8 | 60 | 60 | 60 | - | 1 | 1879 328 |
| | | 8 | - | - | - | 60 (A) | 1 | *1879 326 |
| 9-10-8 | CAP, No. 4 | 6 | 60 | 60 | - | - | 1 | 2084 404 |
| | PD4 | 8 | 60 | 60 | - | - | 1 | 1643 168 |
| | PP2 w/High Performance, PP2 w/Ram Manifold, PD1, PD2, PD4 w/High Performance, PD4-D500 | 8 | 60 | 60 | 60 | - | 1 | 1879 327 |
| | | 8 | - | - | - | 60 (A) | 1 | *1879 325 |
| 9-10-9 | CAP, No. 5, PD4 | 8 | 60 | 60 | - | - | 1 | 1643 170 |
| | PP2 w/High Performance, PP2 w/Ram Manifold, PD1, PD2, PD4 w/High Performance, PD4-D500 | 8 | 60 | 60 | 60 | - | 1 | 1879 327 |
| | | 8 | - | - | - | 60 (A) | 1 | *1879 325 |
| 9-10-19 | SCREW | 6 | 60 | 60 | - | - | 8 | 1408 867 |
| | | 8 | 60 | 60 | 60 | 60 | 10 | 1408 867 |
| **9-11-0** | **CRANKSHAFT REAR BEARING OIL SEAL** | | | | | | | |
| 9-11-1 | PACKAGE | 6 | 60 | 60 | - | - | 1 | 2084 411 |
| | PD4 | 8 | 60 | 60 | - | - | 1 | 1326 093 |
| | PP2 w/High Performance, PP2 w/Ram Manifold, PD1, PD2, PD4-D500, PD4 w/High Performance | 8 | 60 | 60 | 60 | 60 | 1 | 1818 781 |
| 9-11-7 | RETAINER | 6 | 60 | 60 | - | - | 1 | 1947 557 |
| | PP2 w/High Performance, PP2 w/Ram Manifold, PD1, PD2, PD4-D500, PD4 w/High Performance | 8 | 60 | 60 | 60 | 60 | 1 | 1821 389 |
| **9-13-0** | **CRANKSHAFT VIBRATION DAMPER** | | | | | | | |
| 9-13-5 | DAMPER | 6 | 60 | 60 | - | - | 1 | 2120 953 |
| | PD4, Std. Trans. | 8 | 60 | 60 | - | - | 1 | 1947 235 |
| | PP2 w/High Performance, PP2 w/Ram Manifold, PD1, PD2, PD4-D500, PD4 w/High Performance | 8 | 60 | 60 | 60 | 60 | 1 | 1947 897 |
| **9-15-0** | **CAMSHAFT** | | | | | | | |
| 9-15-1 | CAMSHAFT | 6 | 60 | 60 | - | - | 1 | 2128 644 |
| | PD4 | 8 | 60 | 60 | - | - | 1 | 1947 016 |
| | PP2 w/Power Package, PD4-H | 8 | 60 | 60 | - | - | 1 | 1944 712 |
| | PP2 w/High Performance, PP2 w/Ram Manifold, PD4 w/High Performance Police Only, PD4-D500, PD1 w/High Performance Police Only, PD1-D500, PS1 w/High Performance, PS1 w/Ram Manifold, PS3 w/High Performance, PS3 w/Ram Manifold, PC3-300 | 8 | 60 | 60 | 60 | 60 | 1 | 2129 203 |
| | PD1, PD2, PD4 w/High Performance | 8 | - | 60 | 60 | 60 | 1 | 1739 608 |
| 9-15-2 | ECCENTRIC, PD4 | 8 | 60 | 60 | - | - | 1 | 1618 718 |
| 9-15-6 | PLATE, Sprocket Hub Thrust, PD4 | 8 | 60 | 60 | - | - | 1 | 1946 992 |
| 9-15-10 | WASHER, Sprocket Retaining | 6 | 60 | 60 | - | - | 1 | 1739 607 |
| | PD4 | 8 | 60 | 60 | - | - | 1 | 1618 732 |
| | PP2 w/High Performance, PP2 w/Ram Manifold, PD1, PD2, PD4 w/High Performance, PD4-D500 | 8 | 60 | 60 | 60 | 60 | 1 | 1739 607 |

NOTE A: See Page 9-7.



MyMopar.com

| CODE | PART NAME AND DESCRIPTION | NO. OF CYL. | PLYMOUTH | DODGE | DESOTO | CHRYSLER AND IMPERIAL | PER CAR | PART NUMBER |
|---|---|---|---|---|---|---|---|---|
| **9-16-0** | **CAMSHAFT BEARING** | | | | | | | |
| 9-16-6 | BEARING, No. 1 | 6 | 60 | 60 | - | - | 1 | 2121 725 |
| | No. 2 | 6 | 60 | 60 | - | - | 1 | 1821 772 |
| | No. 3 | 6 | 60 | 60 | - | - | 1 | 2121 726 |
| | No. 4 | 6 | 60 | 60 | - | - | 1 | 2121 727 |
| | No. 1, PD4 | 8 | 60 | 60 | - | - | 1 | 1632 522 |
| | No. 2, PD4 | 8 | 60 | 60 | - | - | 1 | 1632 523 |
| | No. 3, PD4 | 8 | 60 | 60 | - | - | 1 | 1632 524 |
| | No. 4, PD4 | 8 | 60 | 60 | - | - | 1 | 1632 525 |
| | No. 5, PD4 | 8 | 60 | 60 | - | - | 1 | 1632 526 |
| | No. 1, PP2 w/High Performance, PP2 w/Ram Manifold, PD1, PD2, PD4 w/High Performance, PD4-D500 | 8 | 60 | 60 | 60 | 60 | 1 | 1821 771 |
| | No. 2, PP2 w/High Performance, PP2 w/Ram Manifold, PD1, PD2, PD4 w/High Performance, PD4-D500 | 8 | 60 | 60 | 60 | 60 | 1 | 1821 772 |
| | No. 3, PP2 w/High Performance, PP2 w/Ram Manifold, PD1, PD2, PD4 w/High Performance, PD4-D500 | 8 | 60 | 60 | 60 | 60 | 1 | 1821 773 |
| | No. 4, PP2 w/High Performance, PP2 w/Ram Manifold, PD1, PD2, PD4 w/High Performance, PD4-D500 | 8 | 60 | 60 | 60 | 60 | 1 | 1821 774 |
| | No. 5, PP2 w/High Performance, PP2 w/Ram Manifold, PD1, PD2, PD4 w/High Performance, PD4-D500 | 8 | 60 | 60 | 60 | 60 | 1 | 1821 775 |
| 9-16-17 | PLUG, Camshaft Rear Bearing | 6 | 60 | 60 | - | - | 1 | 1947 786 |
| | PD4 | 8 | 60 | 60 | - | - | 1 | 1821 722 |
| | PP2 High Performance, PP2 Ram Manifold, PP2 Police Cars, PD1, PD2, PD4-D500, PD4 High Performance, PD4 Police Cars, PS1 High Performance, PS1 Ram Manifold | 8 | 60 | 60 | 60 | 60 | 1 | 1852 177 |
| **9-17-0** | **CAMSHAFT SPROCKET** | | | | | | | |
| 9-17-5 | SPROCKET, Camshaft, UP TO | 6 | 60 (1) | 60 (1) | - | - | 1 | *2128 587 |
| | AFTER | 6 | 60 (1) | 60 (1) | - | - | 1 | *1947 560 |
| | PD4 | 8 | 60 | 60 | - | - | 1 | 1618 666 |
| | PP2 Ram Manifold, PD1-D500, PD2-D500, PD4-D500, PS1 Ram Manifold, PS3 Ram Manifold, PC3-300 | 8 | 60 | 60 | 60 | 60 | 1 | 2129 202 |
| | PD4 w/High Performance, PD1, PD2 | 8 | 60 | 60 | 60 | 60 | 1 | 1737 622 |
| 9-17-13 | SPACER, PD4 | 8 | 60 | 60 | - | - | 1 | 1618 717 |
| **9-20-0** | **TIMING CHAIN** | | | | | | | |
| 9-20-1 | CHAIN | 6 | 60 | 60 | - | - | 1 | 1737 620 |
| | PD4 | 8 | 60 | 60 | - | - | 1 | 1618 736 |
| | PP2 w/High Performance, PP2 w/Ram Manifold, PD1, PD2, PD4-D500, PD4 w/High Performance | 8 | 60 | 60 | 60 | 60 | 1 | 1737 620 |
| **9-23-0** | **CHAIN CASE COVER** | | | | | | | |
| 9-23-5 | COVER | 6 | 60 | 60 | - | - | 1 | 1947 551 |
| | PD4 | 8 | 60 | 60 | - | - | 1 | 1944 773 |
| | PP2 High Performance, PP2 Ram Manifold, PP2 Police Cars, PD4-D500, PD4 High Performance, PD4 Police Cars, PD1, PD2 | 8 | 60 | 60 | 60 | 60 | 1 | 2120 627 |
| 9-23-10 | SCREW, w/WASHER | 6 | 60 | 60 | - | - | 6 | 1407 234 |
| | | 6 | 60 | 60 | - | - | 1 | *2121 573 |
| | PD4 | 8 | 60 | 60 | - | - | 3 | 180 122 |
| | PD4 | 8 | 60 | 60 | - | - | 1 | 180 137 |
| | PP2 High Performance, PP2 Ram Manifold, PP2 Police Cars, PD1, PD2, PD4-D500, PD4 High Performance, PD4 Police Cars, PS1 | 8 | 60 | 60 | 60 | 60 | 4 | 1407 234 |

NOTE 1: Engine 40 P22-4-13.



MyMopar.com

| CODE | PART NAME AND DESCRIPTION | NO. OF CYL. | PLYMOUTH | DODGE | DESOTO | CHRYSLER AND IMPERIAL | PER CAR | PART NUMBER |
|---|---|---|---|---|---|---|---|---|
| **9-23-0** | **CHAIN CASE COVER - Cont'd** | | | | | | | |
| 9-23-10 | SCREW, w/WASHER - Cont'd PP2 High Performance, PP2 Ram Manifold, PP2 Police Cars, PD1, PD2, PD4-D500, PD4 High Performance, PD4 Police Cars, PS1 | 8 | 60 | 60 | 60 | 60 | 3 | 1945 404 |
| 9-23-17 | GASKET | 6 | 60 | 60 | - | - | 1 | 1947 554 |
| | PD4 | 8 | 60 | 60 | - | - | 1 | 2129 012 |
| | PP2 High Performance, PP2 Ram Manifold, PP2 Police Cars, PD1, PD2, PD4-D500, PD4 High Performance, PD4 Police Cars, PS1 | 8 | 60 | 60 | 60 | 60 | 1 | 1945 173 |
| 9-23-18 | OIL SEAL | 6 | 60 | 60 | - | - | 1 | 1947 581 |
| | PD4 | 8 | 60 | 60 | - | - | 1 | 1618 683 |
| | PP2 High Performance, PP2 Ram Manifold, Performance, PD4-D500, PD4 Police Cars, Performance, PD4-D500, PD4 Police Cars. | 8 | 60 | 60 | 60 | 60 | 1 | *1737 771 |
| 9-23-40 | INDICATOR, Timing, Std. Trans., PD4 | 8 | 60 | 60 | - | - | 1 | 1947 236 |
| | w/Automatic Trans., PD4 | 8 | 60 | 60 | - | - | 1 | 1851 861 |
| **9-31-0** | **CONNECTING ROD** | | | | | | | |
| NOTE: | Connecting Rod includes Bearing Cap, Bolt, Nut, Lockwasher and Bushing but does not include Bearing. | | | | | | | |
| 9-31-4 | ROD, UP TO | 6 | 60 (1) | 60 (1) | - | - | 6 | *1947 950 |
| | AFTER | 6 | 60 (1) | 60 (1) | - | - | 6 | ⊟2205 552 |
| | PD4 | 8 | 60 | 60 | - | - | 8 | 1944 866 |
| | PP2 w/High Performance, PP2 w/Ram Manifold, PP2 Police Cars, PD1, PD2, PD4-D500, PD4 w/High Performance | 8 | 60 | 60 | 60 | - | 8 | 1737 690 |
| | | 8 | - | - | - | 60 (A) | 8 | *1851 533 |
| 9-31-5 | BOLT, Bearing Cap | 6 | 60 | 60 | - | - | 12 | 1944 865 |
| | PD4 | 8 | 60 | 60 | - | - | 16 | 1944 865 |
| | PP2 w/High Performance, PP2 w/Ram Manifold, PD1, PD2, PD4-D500, PD4 w/High Performance | 8 | 60 | 60 | 60 | 60 | 16 | 1737 694 |
| 9-31-7 | NUT, Cap Bolt | 6-8 | 60 | 60 | 60 | 60 | ★ | 1737 695 |
| 9-31-10 | BUSHING, PD4 | 8 | 60 | 60 | - | - | 8 | 1618 701 |
| **9-32-0** | **CONNECTING ROD BEARING PACKAGES** | | | | | | | |
| NOTE: | When .001 thicker wall connecting rod bearings are used for engines in production an identification mark is stamped on the machined surface of the crankshaft center counterweight for six cylinder engines and No. 3 counterweight for V8 cylinder engines. When the thicker wall connecting rod bearings are used the crankshaft will be marked R1, R2, R3, R4 or R5 depending on which journal has the .001 thicker wall bearing. | | | | | | | |
| NOTE: | Connecting rod bearing packages consist of one upper and one lower bearing. | | | | | | | |
| 9-32-2 | BEARING PACKAGE, Std. | 6 | 60 | 60 | - | - | 6 | 2084 380 |
| | .001 U/S | 6 | 60 | 60 | - | - | 6 | 2084 381 |
| | .002 U/S | 6 | 60 | 60 | - | - | 6 | 2084 382 |
| | .010 U/S | 6 | 60 | 60 | - | - | 6 | 2084 383 |
| | Std., PD4 | 8 | 60 | 60 | - | - | 8 | 1879 617 |
| | .001 U/S, PD4 | 8 | 60 | 60 | - | - | 8 | 1879 618 |
| | .002 U/S, PD4 | 8 | 60 | 60 | - | - | 8 | 1879 619 |
| | .003 U/S, PD4 | 8 | 60 | 60 | - | - | 8 | 1879 620 |
| | .010 U/S, PD4 | 8 | 60 | 60 | - | - | 8 | 1879 621 |
| | Std., PP2 w/High Performance, PP2 w/Ram Manifold, PP2 Police Cars, PD1, PD2, PD4-D500, PD4 w/High Performance | 8 | 60 | 60 | 60 | 60 | 8 | 1818 698 |

NOTE A: See Page 9-7.

NOTE 1: Engine No. PP2-7-11.



MyMopar.com

| CODE | PART NAME AND DESCRIPTION | NO. OF CYL. | PLYMOUTH | DODGE | DESOTO | CHRYSLER AND IMPERIAL | PER CAR | PART NUMBER |
|---|---|---|---|---|---|---|---|---|
| **9-32-0** | **CONNECTING ROD BEARING PACKAGES - Cont'd** | | | | | | | |
| 9-32-2 | Bearing Package - Cont'd | | | | | | | |
| | .001 U/S, PP2 w/High Performance, PP2 w/Ram Manifold, PP2 Police Cars, PD1, PD2, PD4-D500, PD4 w/High Performance . | 8 | 60 | 60 | 60 | 60 | 8 | 1818 699 |
| | .002 U/S, PP2 w/High Performance, PP2 w/Ram Manifold, PP2 Police Cars, PD1, PD2, PD4-D500, PD4 w/High Performance . | 8 | 60 | 60 | 60 | 60 | 8 | 1818 700 |
| | .003 U/S, PP2 w/High Performance, PP2 w/Ram Manifold, PP2 Police Cars, PD1, PD2, PD4-D500, PD4 w/High Performance . | 8 | 60 | 60 | 60 | 60 | 8 | 1818 701 |
| | .010 U/S, PP2 w/High Performance, PP2 w/Ram Manifold, PP2 Police Cars, PD1, PD2, PD4-D500, PD4 w/High Performance . | 8 | 60 | 60 | 60 | 60 | 8 | 1818 702 |
| | .012 U/S, PP2 w/High Performance, PP2 w/Ram Manifold, PP2 Police Cars, PD1, PD2, PD4-D500, PD4 w/High Performance . | 8 | 60 | 60 | 60 | 60 | 8 | 1818 703 |

## NOTES



MyMopar.com

| CODE | PART NAME AND DESCRIPTION | NO. OF CYL. | PLYMOUTH | DODGE | DESOTO | CHRYSLER AND IMPERIAL | PER CAR | PART NUMBER |
|---|---|---|---|---|---|---|---|---|

## NOTES



MyMopar.com

## 9-34-0 PISTON, W/PIN

NOTE: The following pistons have pin and pin retaining rings.

| CODE | PART NAME AND DESCRIPTION | NO. OF CYL. | PLYMOUTH | DODGE | DESOTO | CHRYSLER AND IMPERIAL | PER CAR | PART NUMBER |
|---|---|---|---|---|---|---|---|---|
| 9-34-5 | PISTON, Std. | 6 | 60 | 60 | - | - | 6 | 2084 384 |
| | .005 O/S | 6 | 60 | 60 | - | - | 6 | 2084 385 |
| | .020 O/S | 6 | 60 | 60 | - | - | 6 | 2084 386 |
| | .040 O/S | 6 | 60 | 60 | - | - | 6 | 2084 387 |
| | PISTON, Std., PD4 | 8 | 60 | 60 | - | - | 8 | 1843 004 |
| | .005 O/S, PD4 | 8 | 60 | 60 | - | - | 8 | 1843 005 |
| | .020 O/S, PD4 | 8 | 60 | 60 | - | - | 8 | 1843 006 |
| | .040 O/S, PD4 | 8 | 60 | 60 | - | - | 8 | 1843 007 |
| | PISTON, Std., PP2 w/High Performance, PP2 w/Ram Manifold, PD1, PS1 | 8 | 60 | 60 | 60 | - | 8 | 1879 644 |
| | .005 O/S, PP2 w/High Performance, PP2 w/Ram Manifold, PD1, PS1 | 8 | 60 | 60 | 60 | - | 8 | 1879 645 |
| | .020 O/S, PP2 w/High Performance, PP2 w/Ram Manifold, PD1, PS1 | 8 | 60 | 60 | 60 | - | 8 | 1879 646 |
| | .040 O/S, PP2 w/High Performance, PP2 w/Ram Manifold, PD1, PS1 | 8 | 60 | 60 | 60 | - | 8 | 1879 647 |
| | PISTON, Std., PP2 Police Cars, PD4 w/High Performance, PD4-D500, PD1-D500, PD1 w/High Performance, PD2 All, PS1 w/High Performance, PS1 w/Ram Manifold, PS3 All | 8 | - | 60 | 60 | - | 8 | 1879 333 |
| | .005 O/S, PP2 Police Cars, PD4 w/High Performance, PD4-D500, PD1-D500, PD1 w/High Performance, PD2 All, PS1 w/High Performance, PS1 w/Ram Manifold, PS3 All | 8 | - | 60 | 60 | - | 8 | 1879 334 |
| | .020 O/S, PP2 Police Cars, PD4 w/High Performance, PD4-D500, PD1-D500, PD1 w/High Performance, PD2 All, PS1 w/High Performance, PS1 w/Ram Manifold, PS3 All | 8 | - | 60 | 60 | - | 8 | 1879 335 |
| | .040 O/S, PD4 w/High Performance, PD4-D500, PD1-D500, PD1 w/High Performance, PD2 All, PS1 w/High Performance, PS1 w/Ram Manifold, PS3 All | 8 | - | 60 | 60 | - | 8 | 1879 336 |
| | PISTON, Std., PC1, PC2 | 8 | - | - | - | 60 (A) | 8 | *1879 631 |
| | .005 O/S, PC1, PC2 | 8 | - | - | - | 60 (A) | 8 | *1879 632 |
| | .020 O/S, PC1, PC2 | 8 | - | - | - | 60 (A) | 8 | *1879 633 |
| | .40 O/S, PC1, PC2 | 8 | - | - | - | 60 (A) | 8 | *1879 634 |
| | PISTON, Std., PC3, PY1 | 8 | - | - | - | 60 (A) | 8 | *1879 337 |
| | .005 O/S, PC3, PY1 | 8 | - | - | - | 60 (A) | 8 | *1879 338 |
| | .020 O/S, PC3, PY1 | 8 | - | - | - | 60 (A) | 8 | *1879 339 |
| | .040 O/S, PC3, PY1 | 8 | - | - | - | 60 (A) | 8 | *1879 340 |
| | PISTON, Std., L.C. Export | 6 | 60 | 60 | - | - | 6 | 2084 388 |
| | .005 O/S, L.C. Export | 6 | 60 | 60 | - | - | 6 | 2084 389 |
| | .020 O/S, L.C. Export | 6 | 60 | 60 | - | - | 6 | 2084 390 |
| | PISTON, Std., L.C. Export, PD4 | 8 | 60 | 60 | - | - | 8 | 1843 316 |
| | .005 O/S, L.C. Export, PD4 | 8 | 60 | 60 | - | - | 8 | 1843 317 |
| | .020 O/S, L.C. Export, PD4 | 8 | 60 | 60 | - | - | 8 | 1843 318 |
| | PISTON, Std., L.C. Export, PD1, PS1 | 8 | - | 60 | 60 | - | 8 | 1879 641 |
| | .005 O/S, L.C. Export, PD1, PS1 | 8 | - | 60 | 60 | - | 8 | 1879 642 |
| | .020 O/S, L.C. Export, PD1, PS1 | 8 | - | 60 | 60 | - | 8 | 1879 643 |
| | PISTON, Std., L.C. Export, PD2, PS1 w/High Performance, PS3 | 8 | - | 60 | 60 | - | 8 | 1879 648 |
| | .005 O/S, L.C. Export, PD2, PS1 w/High Performance, PS3 | 8 | - | 60 | 60 | - | 8 | 1879 649 |
| | .020 O/S, L.C. Export, PD2, PS1 w/High Performance, PS3 | 8 | - | 60 | 60 | - | 8 | 1879 650 |
| | PISTON, Std., L.C. Export, PC1, PC2 | 8 | - | - | - | 60 | 8 | 1879 635 |
| | .005 O/S, L.C. Export, PC1, PC2 | 8 | - | - | - | 60 | 8 | 1879 636 |
| | .020 O/S, L.C. Export, PC1, PC2 | 8 | - | - | - | 60 | 8 | 1879 637 |
| | PISTON, Std., L.C. Export, PC3, PY1 | 8 | - | - | - | 60 | 8 | 1879 638 |
| | .005 O/S, L.C. Export, PC3, PY1 | 8 | - | - | - | 60 | 8 | 1879 639 |
| | .020 O/S, L.C. Export, PC3, PY1 | 8 | - | - | - | 60 | 8 | 1879 640 |

NOTE A: See Page 9-7.



MyMopar.com

| CODE | PART NAME AND DESCRIPTION | NO. OF CYL. | PLYMOUTH | DODGE | DESOTO | CHRYSLER AND IMPERIAL | PER CAR | PART NUMBER |
|---|---|---|---|---|---|---|---|---|
| **9-35-0** | **PISTON RING SETS** | | | | | | | |
| | NOTE: The following Multi-Purpose Piston Ring Sets are for use in cylinders with taper wear and also for use in new or rebored cylinders. | | | | | | | |
| 9-35-1 | SET, Multi-Purpose, Std. to .009 O/S | 6 | 60 | 60 | - | - | 1 | ⊟2240 640 |
| | .020 to .029 O/S | 6 | 60 | 60 | - | - | 1 | 2196 039 |
| | .040 to .049 O/S | 6 | 60 | 60 | - | - | 1 | 2196 040 |
| | Std., PD4 | 8 | 60 | 60 | - | - | 1 | 1752 588 |
| | .020 O/S, PD4 | 8 | 60 | 60 | - | - | 1 | 1752 589 |
| | .040 O/S, PD4 | 8 | 60 | 60 | - | - | 1 | 1752 590 |
| | Std. to .009 O/S, PP2 w/High Performance, PP2 w/Ram Manifold, PD1, PS1 | 8 | 60 | 60 | 60 | - | 1 | 1843 330 |
| | .020 to .029 O/S, PP2 w/High Performance, PP2 w/Ram Manifold, PD1, PS1 | 8 | 60 | 60 | 60 | - | 1 | 1843 331 |
| | .040 to .049 O/S, PP2 w/High Performance, PP2 w/Ram Manifold, PD1, PS1 | 8 | 60 | 60 | 60 | - | 1 | 1843 332 |
| | Std. to .009 O/S, PD4-D500, PD4 w/High Performance, PD1-D500, PD1 w/High Performance, PD2, PS1 w/Ram Manifold, PS1 w/High Performance, PS3 | 8 | - | 60 | 60 | - | 1 | 1881 693 |
| | .020 to .029 O/S, PD4-D500, PD4 w/High Performance, PD1-D500, PD1 w/High Performance, PD2, PS1 w/Ram Manifold, PS1 w/High Performance, PS3 | 8 | - | 60 | 60 | - | 1 | 1881 694 |
| | .040 to .049 O/S, PD4-D500, PD4 w/High Performance, PD1-D500, PD1 w/High Performance, PD2, PS1 w/Ram Manifold, PS1 w/High Performance, PS3 | 8 | - | 60 | 60 | - | 1 | 1881 695 |
| | Std. to .009 O/S, PC1, PC2 | 8 | - | - | - | 60 (A) | 1 | *1881 696 |
| | .020 to .029 O/S, PC1, PC2 | 8 | - | - | - | 60 (A) | 1 | *1881 697 |
| | .040 to .049 O/S, PC1, PC2 | 8 | - | - | - | 60 (A) | 1 | *1881 698 |
| | Std. to .009 O/S, PC3, PY1 | 8 | - | - | - | 60 (A) | 1 | *1881 699 |
| | .020 to .029 O/S, PC3, PY1 | 8 | - | - | - | 60 (A) | 1 | *1881 700 |
| | .040 to .049 O/S, PC3, PY1 | 8 | - | - | - | 60 (A) | 1 | *1881 701 |
| **9-36-0** | **PISTON PIN** | | | | | | | |
| 9-36-5 | PIN, Std., PD4 | 8 | 60 | 60 | - | - | 8 | 1618 738 |
| | .003 O/S, PD4 | 8 | 60 | 60 | - | - | 8 | 1618 739 |
| | .008 O/S, PD4 | 8 | 60 | 60 | - | - | 8 | 1618 740 |
| 9-36-7 | RING, Retaining, PD4 | 8 | 60 | 60 | - | - | 16 | 1324 470 |
| **9-39-0** | **VALVE** | | | | | | | |
| 9-39-1 | GASKET PACKAGE, Valve Grinding | 6 | 60 | 60 | - | - | 1 | 2196 046 |
| | PD4 UP TO | 8 | 60 (1) | 60 (1) | - | - | 1 | 2084 226 |
| | PD4 AFTER | 8 | 60 (1) | 60 (1) | - | - | 1 | 2196 086 |
| | PP2 w/High Performance, PP2 w/Ram Manifold, PD1, PD2, PD4 w/High Performance, PD4-D500 | 8 | 60 | 60 | 60 | - | 1 | 1879 703 |
| | | 8 | - | - | - | 60 (A) | 1 | *1879 704 |
| 9-39-5 | VALVE, Intake, Std. | 6 | 60 | 60 | - | - | 6 | 1947 623 |
| | .005 O/S | 6 | 60 | 60 | - | - | 6 | 2121 578 |
| | .015 O/S | 6 | 60 | 60 | - | - | 6 | 2121 579 |
| | .030 O/S | 6 | 60 | 60 | - | - | 6 | 2121 580 |
| | Std., PD4 | 8 | 60 | 60 | - | - | 8 | 1945 318 |
| | .005 O/S, PD4 | 8 | 60 | 60 | - | - | 8 | 1945 319 |
| | .015 O/S, PD4 | 8 | 60 | 60 | - | - | 8 | 1945 320 |
| | .030 O/S, PD4 | 8 | 60 | 60 | - | - | 8 | 1945 321 |

NOTE 1: Engine No. 65030.

NOTE A: See Page 9-7.

★ Indicates use as required. Numerals in parentheses ( ) refer to notes. Printed in U.S.A.
⊟ Indicates parts not listed in any previous parts book. Prices and specifications subject to change without notice.
Dec. 9, 1960 Supersedes April 20, 1960. Page 9-16 * Indicates change or addition.

MyMopar.com

| CODE | PART NAME AND DESCRIPTION | NO. OF CYL. | PLYMOUTH | DODGE | DESOTO | CHRYSLER AND IMPERIAL | PER CAR | PART NUMBER |
|---|---|---|---|---|---|---|---|---|
| **9-39-0** | **VALVE - Cont'd** | | | | | | | |
| 9-39-5 | VALVE - Cont'd | | | | | | | |
| | Std., PP2 w/High Performance, PP2 w/Ram Manifold, PD4-D500, PD4 Police Cars, PD1, PS1, PC1, PC2 | 8 | 60 | 60 | 60 | 60 (A) | 8 | *1858 557 |
| | .005 O/S, PP2 w/High Performance, PP2 w/Ram Manifold, PD4-D500, PD4 Police Cars, PD1, PS1, PC1, PC2 | 8 | 60 | 60 | 60 | 60 (A) | 8 | *1858 558 |
| | .015 O/S, PP2 w/High Performance, PP2 w/Ram Manifold, PD4-D500, PD4 Police Cars, PD1, PS1, PC1, PC2 | 8 | 60 | 60 | 60 | 60 (A) | 8 | *1858 559 |
| | .030 O/S, PP2 w/High Performance, PP2 w/Ram Manifold, PD4 Police, PD1, PS1, w/Ram Manifold, PD4 Police Cars, PD1, PS1, PC1, PC2 | 8 | 60 | 60 | 60 | 60 (A) | 8 | *1858 560 |
| | Std., PP2 Police Cars, PD4 w/High Performance, PD4-D500, PD4 Police Cars, PD1 w/High Performance, PD1 Police Cars, PD1-D500, PD2, PS1 w/High Performance, PS1 w/Ram Manifold, PS3, PC3, PY1 | 8 | 60 | 60 | 60 | 60 (A) | 8 | *1851 767 |
| | .005 O/S, PP2 Police Cars, PD4 w/High Performance, PD4-D500, PD4 Police Cars, PD1 w/High Performance, PD1-D500, PD2, PD4 Police Cars, PS1 w/High Performance, PS1 w/Ram Manifold, PS3, PC3, PY1 | 8 | 60 | 60 | 60 | 60 (A) | 8 | *1851 768 |
| | .015 O/S, PP2 Police Cars, PD4 w/High Performance, PD4-D500, PD4 Police Cars, PD1 w/High Performance, PD1-D500, PD2, PS1 w/High Performance, PS1 w/Ram Manifold, PS3, PC3, PY1 | 8 | 60 | 60 | 60 | 60 (A) | 8 | *1851 769 |
| | .030 O/S, PP2 Police Cars, PD4 w/High Performance, PD4-D500, PD4 Police Cars, PD1 w/High Performance, PD1-D500, PD2, PS1 w/High Performance, PS1 w/Ram Manifold, PS3, PC3. PY1 | 8 | 60 | 60 | 60 | 60 (A) | 8 | *1851 770 |
| 9-39-6 | VALVE, Exhaust, Std. | 6 | 60 | 60 | - | - | 6 | 1947 624 |
| | .005 O/S | 6 | 60 | 60 | - | - | 6 | 2121 581 |
| | .015 O/S | 6 | 60 | 60 | - | - | 6 | 2121 582 |
| | .030 O/S | 6 | 60 | 60 | - | - | 6 | 2121 583 |
| | Std., PD4 | 8 | 60 | 60 | - | - | 8 | 1852 248 |
| | .005 O/S, PD4 | 8 | 60 | 60 | - | - | 8 | 1637 563 |
| | .015 O/S, PD4 | 8 | 60 | 60 | - | - | 8 | 1637 564 |
| | .030 O/S, PD4 | 8 | 60 | 60 | - | - | 8 | 1637 565 |
| | Std., PP2 w/High Performance, PP2 w/Ram Manifold, PP2 Police Cars, PD4 w/High Performance, PD4-D500, PD1, PD2 | 8 | 60 | 60 | 60 | 60 | 8 | 1737 698 |
| | .005 O/S, PP2 w/High Performance, PP2 w/Ram Manifold. PP2 Police Cars. PD4 w/High Performance, PD4-D500, PD1, PD2 | 8 | 60 | 60 | 60 | 60 | 8 | 1739 612 |
| | .015 O/S, PP2 w/High Performance, PP2 w/Ram Manifold, PD4 w/High Performance, PD4-D500, PD1, PD2 | 8 | 60 | 60 | 60 | 60 | 8 | 1739 613 |
| | .030 O/S, PP2 w/High Performance, PP2 w/Ram Manifold, PD4 w/High Performance, PD4-D500, PD1, PD2 | 8 | 60 | 60 | 60 | 60 | 8 | 1739 614 |
| 9-39-14 | SHIELD, Intake Valve Stem Oil | 6 | 60 | 60 | - | - | 6 | 1630 241 |
| | SHIELD, Exhaust Valve Stem Oil. | 6 | 60 | 60 | - | - | 6 | 2128 977 |
| | SHIELD, Intake Valve Stem Oil, PD4 | 8 | 60 | 60 | - | - | 8 | 1630 241 |
| | SHIELD, Valve Stem Oil, PP2 w/High Performance, PP2 w/Ram Manifold, PP2 Police Cars, PD4 w/High Performance, PD4-D500, PD1, PD2 | 8 | 60 | 60 | 60 | 60 | 16 | 1858 782 |

NOTE A: See Page 9-7.

★ Indicates use as required. Numerals in parentheses ( ) refer to notes. Printed in U.S.A.
⊟ Indicates parts not listed in any previous parts book. Prices and specifications subject to change without notice.
* Indicates change or addition.



MyMopar.com

| CODE | PART NAME AND DESCRIPTION | NO. OF CYL. | PLYMOUTH | DODGE | DESOTO | CHRYSLER AND IMPERIAL | PER CAR | PART NUMBER |
|---|---|---|---|---|---|---|---|---|
| **9-39-0** | **VALVE - Cont'd** | | | | | | | |
| 9-39-15 | SPRING | 6 | 60 | 60 | - | - | 12 | 1739 534 |
| | PD4 | 8 | 60 | 60 | - | - | 16 | 1739 534 |
| | w/DAMPER, PP2 w/High Performance, PP2 w/Ram Manifold, PP2 Police Cars, PD4-D500, PD4 w/High Performance Police Cars, PD1 w/High Performance Police Cars, PD1-D500, PD2-D500, PS1 w/Ram Manifold, PS3 w/Ram Manifold, PC3-300 | 8 | 60 | 60 | 60 | 60 | 16 | 1855 042 |
| | SPRING, PD1, PD2, PD4 w/High Performance Police Cars | 8 | - | 60 | 60 | 60 | 16 | 1944 854 |
| 9-39-16 | RETAINER, Valve Spring | 6 | 60 | 60 | - | - | 12 | 1619 636 |
| | | 8 | 60 | 60 | 60 | 60 | 16 | 1619 636 |
| 9-39-17 | LOCK, Intake Valve Spring Retainer | 6-8 | 60 | 60 | 60 | 60 | ★ | 381 875 |
| | Exhaust Valve Spring Retainer | 6-8 | 60 | 60 | 60 | 60 | ★ | 1614 666 |
| 9-39-21 | SPACER, Valve Spring, PD4 | 8 | 60 | 60 | - | - | 16 | 1639 947 |
| | PP2 w/High Performance, PP2 w/Ram Manifold, PD1, PD2, PD4 w/High Performance, PD4-D500 | 8 | 60 | 60 | 60 | 60 | 16 | 1859 144 |
| **9-41-0** | **VALVE TAPPET** | | | | | | | |
| 9-41-1 | SILENCER PACKAGE, Tappet Chamber, PP2 w/High Performance, PD4 w/High Performance, PD4 w/High Performance Police Cars, PD1, PD2 | 8 | 60 | 60 | 60 | 60 | 1 | 1879 747 |
| 9-41-4 | TAPPET, Std. | 6 | 60 | 60 | - | - | 12 | 1945 291 |
| | .001 O/S, PD4 | 6-8 | 60 | 60 | - | - | 12 | 1945 292 |
| | .008 O/S, PD4 | 6-8 | 60 | 60 | - | - | 12 | 2120 461 |
| | .030 O/S, PD4 | 6-8 | 60 | 60 | - | - | 12 | 2120 462 |
| | Std., PD4 | 8 | 60 | 60 | - | - | 16 | 1739 356 |
| | Std., PP2 w/High Performance, PP2 w/Ram Manifold, PP2 Police Cars, PD1, PD2, PD4-D500, PD4 Police Cars | 8 | 60 | 60 | 60 | 60 | 16 | 1851 904 |
| | .001 O/S, PP2 w/High Performance, PP2 w/Ram Manifold, PP2 Police Cars, PD1, PD2, PD4-D500, PD4 Police Cars | 8 | 60 | 60 | 60 | 60 | 16 | 2084 030 |
| | .008 O/S, PP2 w/High Performance, PP2 w/Ram Manifold, PP2 Police Cars, PD1, PD2, PD4-D500, PD4 Police Cars | 8 | 60 | 60 | 60 | 60 | 16 | 2084 031 |
| | .030 O/S, PP2 w/High Performance, PP2 w/Ram Manifold, PP2 Police Cars, PD1, PD2, PD4-D500, PD4 Police Cars | 8 | 60 | 60 | 60 | 60 | 16 | 2084 032 |
| 9-41-12 | RETAINER, Valve Tappet Plunger, PP2 w/High Performance, PP2 w/Ram Manifold, PP2 Police Cars, PD4-D500, PD4 w/High Performance, PD1, PD2 | 8 | 60 | 60 | 60 | 60 | 16 | 1489 340 |
| **9-42-0** | **VALVE PUSH ROD** | | | | | | | |
| 9-42-1 | ROD, Valve Push | 6 | 60 | 60 | - | - | 12 | 2120 514 |
| | PD4 | 8 | 60 | 60 | - | - | 16 | 1637 721 |
| | PP2 w/High Performance, PP2 w/Ram Manifold, PP2 Police Cars, PD1, PD2, PD4 w/High Performance, PD4-D500 | 8 | 60 | 60 | 60 | - | 16 | 1737 757 |
| | | 8 | - | - | - | 60 (A) | 16 | *1851 669 |
| **9-43-0** | **VALVE ROCKER** | | | | | | | |
| 9-43-1 | ROCKER | 6 | 60 | 60 | - | - | 12 | 1947 594 |
| | Intake Valve, PD4 | 8 | 60 | 60 | - | - | 8 | 1947 503 |
| | Exhaust Valve, PD4 | 8 | 60 | 60 | - | - | 8 | 1947 504 |
| | Right, PP2 w/High Performance, PP2 w/Ram Manifold, PP2 Police Cars, PD1, PD2, PD4 w/High Performance, PD4-D500 | 8 | 60 | 60 | 60 | 60 | 8 | 1737 646 |

NOTE A: See Page 9-7.



MyMopar.com

| CODE | PART NAME AND DESCRIPTION | NO. OF CYL. | PLYMOUTH | DODGE | DESOTO | CHRYSLER AND IMPERIAL | PER CAR | PART NUMBER |
|---|---|---|---|---|---|---|---|---|
| **9-43-0** | **VALVE ROCKER - Cont'd** | | | | | | | |
| 9-43-1 | ROCKER - Cont'd<br>Left, PP2 w/High Performance, PP2 w/Ram Manifold, PP2 Police Cars, PD1, PD2, PD4 w/High Performance, PD4-D500 | 8 | 60 | 60 | 60 | 60 | 8 | *1737 645 |
| 9-43-3 | SCREW, Adjusting | 6 | 60 | 60 | - | - | 12 | 1855 238 |
| | PD4 | 8 | 60 | 60 | - | - | 16 | 1855 238 |
| 9-43-5 | SPACER<br>PP2 w/High Performance, PP2 w/Ram Manifold, PP2 Police Cars, PD1, PD2, PD4 w/High Performance, PD4-D500 | 6 | 60 | 60 | - | - | 6 | 2120 694 |
| | | 8 | 60 | 60 | 60 | 60 | 8 | 1737 756 |
| 9-43-9 | SHAFT | 6 | 60 | 60 | - | - | 1 | 1947 614 |
| | PD4 | 8 | 60 | 60 | - | - | 2 | 1618 671 |
| | PP2 w/High Performance, PP2 w/Ram Manifold, PP2 Police Cars, PD1, PD2, PD4 w/High Performance, PD4-D500 | 8 | 60 | 60 | 60 | 60 | 2 | 1821 393 |
| 9-43-10 | BRACKET, Shaft, End and Center, PP2 w/High Performance, PP2 w/Ram Manifold, PP2 Police Cars, PD1, PD2, PD4 w/High Performance, PD4-D500 | 8 | 60 | 60 | 60 | 60 | 6 | 1739 594 |
| | Intermediate, PP2 w/High Performance, PP2 w/Ram Manifold, PP2 Police Cars, PD1, PD2, PD4 w/High Performance, PD4-D500 | 8 | 60 | 60 | 60 | 60 | 4 | 1739 595 |
| 9-43-11 | RETAINER, Shaft End and Intermediate | 6 | 60 | 60 | - | - | 6 | 1947 616 |
| | RETAINER, Center | 6 | 60 | 60 | - | - | 1 | 1947 617 |
| 9-43-14 | SPRING, Shaft, PD4 | 8 | 60 | 60 | - | - | 8 | 1632 106 |
| 9-43-19 | PLUG, Shaft | 6 | 60 | 60 | - | - | 2 | 1324 268 |
| | PD4 | 8 | 60 | 60 | - | - | 4 | 1858 802 |
| | PP2 w/High Performance, PP2 w/Ram Manifold, PP2 Police Cars, PD1, PD2, PD4 w/High Performance, PD4-D500 | 8 | 60 | 60 | 60 | 60 | 4 | 1324 268 |
| 9-43-23 | WASHER, Shaft Bracket Screw, PP2 w/High Performance, PP2 w/Ram Manifold, PP2 Police Cars, PD1, PD2, PD4 w/High Performance, PD4-D500 | 8 | 60 | 60 | 60 | 60 | 10 | 1536 242 |
| 9-43-26 | SCREW, Shaft Bracket Locating, PD4 | 8 | 60 | 60 | - | - | 2 | 1670 476 |
| **9-45-0** | **FLYWHEEL** | | | | | | | |
| 9-45-1 | FLYWHEEL | 6 | 60 | 60 | - | - | 1 | 1947 561 |
| | PD1, PD4 | 8 | 60 | 60 | - | - | 1 | 2121 950 |
| | 11" Clutch, PD1, PD2, PD4, PC1 | 8 | 60 | 60 | - | 60 | 1 | 2128 768 |
| 9-45-2 | GEAR, Flywheel Ring or Torque Converter Starter Ring, for Larger Ring Gear width of 21/32 use Flywheel and Ring Gear Part No. 1947 561, inside dia., 11.193 | 6 | 60 | 60 | - | - | 1 | *2121 195 |
| | Inside dia., 11.443 | 6 | 60 | 60 | - | - | 1 | ⊟2264 233 |
| | | 8 | 60 | 60 | 60 | 60 | 1 | 1673 646 |
| 9-45-6 | BOLT, PD1, PD2, PD4 | 8 | 60 | 60 | - | - | 6 | 1557 704 |
| 9-45-7 | NUT, Bolt, PD1, PD2, PD4 | 8 | 60 | 60 | - | - | 6 | 675 594 |
| **9-46-0** | **TORQUE CONVERTER** | | | | | | | |
| 9-46-4 | PACKAGE, UP TO Eng. No. | 6 | 60 (1) | 60 (1) | - | - | 1 | 2240 301 |
| | TORQUE CONVERTER, UP TO Eng. No. | 6 | 60 (1) | 60 (1) | - | - | 1 | 2124 398 |
| | AFTER Eng. No. | 6 | 60 (1) | 60 (1) | - | - | 1 | 2125 000 |
| | PD4 | 8 | 60 | 60 | - | - | 1 | 1823 934 |
| | PP2 w/High Performance, PP2 w/Ram Manifold, PD1, PD2, PD4-D500, PD4 w/High Performance | 8 | 60 | 60 | 60 | 60 | 1 | 1731 860 |
| 9-46-8 | PLATE, Drive | 6 | 60 | 60 | - | - | 1 | 1949 763 |
| 9-46-9 | DOWEL, Cylinder Block to Clutch Housing or Torque Converter | 6 | 60 | 60 | - | - | 2 | 1122 532 |
| 9-46-10 | STUD, Torque Converter Drive Flange | 6-8 | 60 | 60 | 60 | 60 | ★ | 1061 157 |

NOTE 1: Engine No. P-22-1-18.

★ Indicates use as required. Numerals in parentheses ( ) refer to notes. Printed in U.S.A.
⊟ Indicates parts not listed in any previous parts book. Prices and specifications subject to change without notice.
* Indicates change or addition.



MyMopar.com

| CODE | PART NAME AND DESCRIPTION | NO. OF CYL. | PLYMOUTH | DODGE | DESOTO | CHRYSLER AND IMPERIAL | PER CAR | PART NUMBER |
|---|---|---|---|---|---|---|---|---|
| **9-46-0** | **TORQUE CONVERTER - Cont'd** | | | | | | | |
| 9-46-11 | NUT, Torque Converter to Crankshaft Stud | 6-8 | 60 | 60 | 60 | 60 | ★ | 675 594 |
| 9-46-21 | SCREW, Drive Plate to Crankshaft | 6 | 60 | 60 | - | - | 6 | 1949 424 |
| | SCREW, Drive Plate | 6 | 60 | 60 | - | - | 4 | 1949 765 |
| 9-46-31 | OIL COOLER, Radiator Core, PC1, PC2 | 8 | 60 | 60 | 60 | 60 | 1 | 1903 792 |
| | PC3, PY1 | 8 | - | - | - | 60 | 1 | 1903 791 |
| 9-46-33 | BRACKET, Transmission Oil Cooler Tube | 6-8 | 60 | 60 | 60 | 60 | 1 | 1949 176 |
| 9-46-43 | NUT, Transmission Oil Cooler Tube Radiator End | 6-8 | 60 | 60 | 60 | 60 | 2 | 1949 845 |
| 9-46-44 | CONNECTOR, Transmission Oil Cooler Tube, Radiator End | 6-8 | 60 | 60 | 60 | 60 | 2 | 1949 846 |
| 9-46-53 | ROLLER, Overrunning Clutch | 6 | 60 | 60 | - | - | 8 | 670 776 |
| 9-46-90 | HOUSING, PD4 | 8 | 60 | 60 | - | - | 1 | 1824 334 |
| | PP2 w/High Performance, PP2 w/Ram Manifold, PD4 w/High Performance, PD4-D500, PD1, PD2 | 8 | 60 | 60 | 60 | 60 | 1 | 1736 436 |
| 9-46-93 | COVER, Housing, PD4 | 8 | 60 | 60 | - | - | 1 | 1854 314 |
| | PP2 w/High Performance, PP2 w/Ram Manifold, PD4-D500, PD4 w/High Performance, PD1, PD2 | 8 | 60 | 60 | 60 | 60 | 1 | 1823 548 |
| 9-46-107 | SCREW, w/WASHER, Cylinder Block to Torque Converter Housing, PD4 | 8 | 60 | 60 | - | - | 1 | 1854 523 |
| | PP2 w/High Performance, PP2 w/Ram Manifold, PD4-D500, PD4 w/High Performance, PD1, PD2 | 8 | 60 | 60 | 60 | 60 | 2 | 6012 042 |
| 9-46-124 | VALVE, Transmission Torque Converter Control | 8 | 60 | 60 | 60 | 60 | 1 | 2124 247 |
| 9-46-130 | OIL SEAL, Impeller Hub | 6 | 60 | 60 | - | - | 1 | 2124 705 |
| | | 8 | 60 | 60 | 60 | 60 | 1 | 1738 263 |
| 9-46-137 | PAN, Housing, PD4 | 8 | 60 | 60 | - | - | 1 | 1853 736 |
| 9-46-229 | SPRING, Overrunning Clutch | 8 | 60 | 60 | 60 | 60 | 8 | 1539 546 |
| **9-48-0** | **MANIFOLD** | | | | | | | |
| 9-48-6 | MANIFOLD, Exhaust | 6 | 60 | 60 | - | - | 1 | 1947 173 |
| | Right, PD4 | 8 | 60 | 60 | - | - | 1 | 1634 722 |
| | Left, PD4 | 8 | 60 | 60 | - | - | 1 | 1618 650 |
| | Right, PP2 w/High Performance, PP2 Police Cars w/One Four Barrel Carburetor, PD4 w/High Performance, PD4 Police Cars w/One Four Barrel Carburetor, PD1, PD2, PS1, PS3 | 8 | 60 | 60 | 60 | 60 | 1 | 1946 969 |
| | Left, PP2 w/High Performance, PP2 Police Cars w/One Four Barrel Carburetor, PD4 w/High Performance, PD4 Police Cars w/One Four Barrel Carburetor, PD1, PD2, PS1, PS3 | 8 | 60 | 60 | 60 | 60 | 1 | 1739 600 |
| | Right, PP2 w/Ram Manifold, PD4-D500, PD1-D500, PD2-D500, PS1 w/Ram Manifold, PS3 w/Ram Manifold, PC3-300 | 8 | 60 | 60 | 60 | 60 | 1 | 1947 488 |
| | Left, PP2 w/Ram Manifold, PD4-D500, PD1-D500, PD2-D500, PS1 w/Ram Manifold, PS3 w/Ram Manifold, PC3-300 | 8 | 60 | 60 | 60 | 60 | 1 | 1947 432 |
| | Right, PP2 Police Cars and PD1, PD4 Police Cars w/Two Four Barrel Carburetors | 8 | 60 | 60 | - | - | 1 | 1947 018 |
| | Right, w/Air Condition, PY1 | 8 | - | - | - | 60 | 1 | 1854 990 |
| 9-48-7 | MANIFOLD, Intake, UP TO | 6 | 60 (1) | 60 (1) | - | - | 1 | *1947 164 |
| | AFTER | 6 | 60 (1) | 60 (1) | - | - | 1 | ⊟2206 290 |
| | PD4 | 8 | 60 | 60 | - | - | 1 | 1859 228 |
| | w/Power Package, PD4 | 8 | 60 | 60 | - | - | 1 | 1859 298 |
| | PP2 w/High Performance, PD1 w/High Performance, PD2, PD4 w/High Performance, PS1 w/High Performance, PS3 w/High Performance | 8 | 60 | 60 | 60 | - * | 1 | 1859 300 |

NOTE 1: Engine No. P-22-5-31.



MyMopar.com

## 9-48-0 MANIFOLD - Cont'd

| CODE | PART NAME AND DESCRIPTION | NO. OF CYL. | PLYMOUTH | DODGE | DESOTO | CHRYSLER AND IMPERIAL | PER CAR | PART NUMBER |
|---|---|---|---|---|---|---|---|---|
| 9-48-7 | MANIFOLD - Cont'd | | | | | | | |
| | PD1, PS1, PS3 | 8 | 60 | 60 | 60 | - | 1 | 1859 299 |
| | w/o Air Condition, PC1 | 8 | - | - | - | 60 (A) | 1 | *1351 899 |
| | w/Air Condition, PC1 | 8 | - | - | - | 60 | 1 | 2120 630 |
| | PC2, PC3, PY1 | 8 | - | - | - | 60 | 1 | 1858 623 |
| | PP2 w/Ram Manifold, PD4-D500, PD1-D500, PD2-D500, PS1 w/Ram Manifold, PS3 w/Ram Manifold, PC3-300, Right | 8 | 60 | 60 | 60 | 60 | 1 | 1947 162 |
| | PP2 w/Ram Manifold, PD4-D500, PD1-D500, PD2-D500, PS1 w/Ram Manifold, PS3 w/Ram Manifold, PC3-300, Left | 8 | 60 | 60 | 60 | 60 | 1 | 1947 541 |
| | PP2 Police Cars and PD1, PD4 Police Cars w/Two Four Barrel Carburetors | 8 | 60 | 60 | - | - | 1 | 1827 899 |
| 9-48-8 | CONNECTOR, Vacuum Control, Heater | 6-8 | 60 | 60 | 60 | 60 | 1 | 1858 955 |
| 9-48-12 | STUD, Intake and Exhaust Manifold | 6 | 60 | 60 | - | - | 11 | 2121 585 |
| | STUD, Exhaust Manifold End | 6 | 60 | 60 | - | - | 2 | 2121 585 |
| 9-48-14 | WASHER, Intake and Exhaust Manifold Stud. | 6 | 60 | 60 | - | - | 13 | 2121 223 |
| 9-48-27 | REINFORCEMENT, Intake Manifold Gasket End, PP2 w/High Performance, PP2 w/Ram Manifold, PP2 Police Cars, PD4 w/High Performance, PD4-D500, PD4 Police Cars, PD1, PD2 | 8 | 60 | 60 | 60 | - | 2 | *1859 332 |
| | | 8 | - | - | - | 60 (A) | 2 | *1351 335 |
| 9-48-40 | SCREW, Intake Manifold, PD4 | 8 | 60 | 60 | - | - | 8 | 1859 465 |
| | PD4 | 8 | 60 | 60 | - | - | 8 | 1859 466 |
| | w/Air Condition, PD4 | 8 | 60 | 60 | - | - | 1 | 1821 174 |
| | w/Air Condition, PD4 | 8 | 60 | 60 | - | - | 1 | 1821 178 |
| | PP2 w/High Performance, PP2 w/Ram Manifold, PP2 Police Cars, PD4 w/High Performance, PD4-D500, PD4 Police Cars, PD1, PD2 | 8 | 60 | 60 | 60 | 60 | ★ | 2120 467 |
| | PP2 w/High Performance, PP2 w/Ram Manifold, PP2 Police Cars, PD4 w/High Performance, PD4-D500, PD4 Police Cars, PD1, PD2 | 8 | 60 | 60 | 60 | 60 | ★ | 2120 468 |
| | PP2 w/High Performance, PP2 w/Ram Manifold, PD4 w/High Performance, PD4-D500, PD1, PD2, w/Air Condition, Compressor Study Bracket, 2 1/2" Long | 8 | 60 | 60 | 60 | 60 | ★ | |
| | 2" Long | 8 | 60 | 60 | 60 | 60 | ★ | |
| | pressor Study Bracket, 2 1/2" Long | 8 | 60 | 60 | 60 | 60 | ☆ | *2120 468 |
| | 2" Long | 8 | 60 | 60 | 60 | 60 | ☆ | *2120 467 |
| 9-48-43 | STUD, Exhaust Manifold, PP2 w/High Performance, PP2 w/Ram Manifold, PP2 Police Cars, PD4 w/High Performance, PD4-D500, PD4 Police Cars, PD1, PD2 | 8 | 60 | 60 | 60 | 60 | 10 | 1613 782 |
| | STUD, Exhaust, Right, PP2 w/High Performance, PP2 Police Cars, PD4 w/High Performance, PD4 Police Cars, PD1, PD2 | 8 | 60 | 60 | 60 | 60 | 2 | 2120 505 |
| 9-48-56 | SHIELD, Intake Manifold Heat, PD4 | 8 | 60 | 60 | - | - | 1 | 1619 627 |
| 9-48-124 | ELBOW, Intake Manifold Heat Inlet, PP2 w/Ram Manifold, PD4-D500, PD1-D500, PD2-D500, PS1 w/Ram Manifold, PS3 w/Ram Manifold | 8 | 60 | 60 | 60 | - | 2 | 1947 732 |
| | PC3-300 | 8 | - | - | - | 60 | 2 | 1947 430 |
| 9-48-126 | TUBE, Exhaust Manifold Heat PP2, PD1, PD4, Police Cars w/Two Four Barrel Carburetors | 8 | 60 | 60 | - | - | 1 | 1325 850 |
| 9-48-138 | SHIELD, Heat Tube Splash PP2, PD1, PD4, Police Cars w/Two Four Barrel Carburetors | 8 | 60 | 60 | - | - | 1 | 1854 853 |
| 9-48-151 | TUBE, Intake Manifold Equalizer, PP2 w/Ram Manifold, PD4-D500, PD1-D500, PD2-D500, PS1 w/Ram Manifold, PS3 w/Ram Manifold, PC3-300 | 8 | 60 | 60 | 60 | 60 | 1 | 1947 402 |

NOTE A: See Page 9-7.



MyMopar.com

| CODE | PART NAME AND DESCRIPTION | NO. OF CYL. | PLYMOUTH | DODGE | DESOTO | CHRYSLER AND IMPERIAL | PER CAR | PART NUMBER |
|---|---|---|---|---|---|---|---|---|
| **9-48-0** | **MANIFOLD - Cont'd** | | | | | | | |
| 9-48-152 | COUPLING, Intake Manifold Equalizer Tube, PP2 w/Ram Manifold, PD4-D500, PD1-D500, PD2-D500, PS1 w/Ram Manifold, PS3 w/Ram Manifold, PC3-300 | 8 | 60 | 60 | 60 | 60 | 2 | 1947 403 |
| 9-48-153 | CLAMP, Intake Manifold Equalizer Tube Coupling, PP2 Ram Manifold, PD4-D500, PD1-D500, PD2-D500, PS1 w/Ram Manifold, PS3 w/Ram Manifold, PC3-300 | 8 | 60 | 60 | 60 | 60 | 2 | 870 469 |
| **9-50-0** | **MANIFOLD GASKETS** | | | | | | | |
| 9-50-1 | GASKET SET | 6 | 60 | 60 | - | - | 1 | 2084 416 |
| | PD4 | 8 | 60 | 60 | - | - | 1 | 2084 347 |
| 9-50-3 | GASKET, Intake to Exhaust Manifold | 6 | 60 | 60 | - | - | 1 | ⊟2206 120 |
| 9-50-4 | GASKET, Intake Manifold Heat Inlet Elbow, PP2 w/Ram Manifold, PD4-D500, PD1-D500, PD2-D500, PS1 w/Ram Manifold, PS3 w/Ram Manifold, PC3-300 | 8 | 60 | 60 | 60 | 60 | 2 | 1947 429 |
| 9-50-5 | GASKET, Exhaust Manifold, Right, PD4 | 8 | 60 | 60 | - | - | 1 | 1639 194 |
| | Left, PD4 | 8 | 60 | 60 | - | - | 1 | 1670 508 |
| 9-50-6 | GASKET, Intake Manifold, PP2 w/High Performance, PP2 w/Ram Manifold, PP2 Police Cars, PD4 w/High Performance, PD4-D500, PD1, PD2, PD4 Police Cars | 8 | 60 | 60 | 60 | - | 1 | *1737 709 |
| | | 8 | - | - | - | 60 (A) | 1 | *1851 664 |
| 9-50-16 | GASKET, Intake Manifold Heat Inlet Elbow to Exhaust Manifold, PP2 w/Ram Manifold, PD4-D500, PD1-D500, PD2-D500, PS1 w/Ram Manifold, PS3 w/Ram Manifold, PC3-300 | 8 | 60 | 60 | 60 | 60 | 2 | 1947 428 |
| **9-58-0** | **MANIFOLD HEAT CONTROL VALVE THERMOSTAT** | | | | | | | |
| 9-58-1 | PACKAGE, Manifold Heat Control | 6 | 60 | 60 | - | - | 1 | 2084 797 |
| | PD4 | 8 | 60 | 60 | - | - | 1 | 2084 792 |
| | PP2 w/High Performance, PP2 Police Cars, PD4 w/High Performance, PD1, PD2, PD4 Police Cars | 8 | 60 | 60 | 60 | 60 | 1 | 2084 794 |
| | Right, PP2 w/Ram Manifold, PD4-D500, PD1-D500, PD2-D500, PS1 w/Ram Manifold, PS3 w/Ram Manifold, PC3-300 | 8 | 60 | 60 | 60 | 60 | 1 | 2196 074 |
| | Left, PP2 w/Ram Manifold, PD4-D500, PD1-D500, PD2-D500, PS1 w/Ram Manifold, PS3 w/Ram Manifold, PC3-300 | 8 | 60 | 60 | 60 | 60 | 1 | 2084 795 |
| 9-58-5 | THERMOSTAT | 6 | 60 | 60 | - | - | 1 | 2121 554 |
| | | 8 | 60 | 60 | 60 | 60 | 1 | 960 003 |
| | PP2 w/Ram Manifold, PD4-D500, PD1-D500, PD2-D500, PS1 w/Ram Manifold, PS3 w/Ram Manifold, PC3-300 | 8 | 60 | 60 | 60 | 60 | 2 | 2128 933 |
| 9-58-12 | COUNTERWEIGHT | 6 | 60 | 60 | - | - | 1 | 2121 430 |
| | SHIELD | 8 | 60 | 60 | 60 | 60 | 1 | 1670 515 |
| | PP2 w/Ram Manifold, PD4-D500, PD1-D500, PD2-D500, PS1 w/Ram Manifold, PS3 w/Ram Manifold, PC3-300, Right | 8 | 60 | 60 | 60 | 60 | 1 | 1670 515 |
| | PP2 w/Ram Manifold, PD4-D500, PD1-D500, PD2-D500, PS1 w/Ram Manifold, PS3 w/Ram Manifold, PC3-300, Left | 8 | 60 | 60 | 60 | 60 | 1 | 1944 616 |
| 9-58-13 | BOLT, Manifold Heat Control Thermostat Shield Clamp | 6-8 | 60 | 60 | 60 | 60 | 1 | 1736 012 |
| | PP2 w/Ram Manifold, PD4-D500, PD1-D500, PD2-D500, PS1 w/Ram Manifold, PS3 w/Ram Manifold, PC3-300 | 8 | 60 | 60 | 60 | 60 | 2 | 1736 012 |

NOTE A: See Page 9-7.



MyMopar.com

| CODE | PART NAME AND DESCRIPTION | NO. OF CYL. | PLYMOUTH | DODGE | DESOTO | CHRYSLER AND IMPERIAL | PER CAR | PART NUMBER |
|---|---|---|---|---|---|---|---|---|
| **9-58-0** | **MANIFOLD HEAT CONTROL VALVE THERMOSTAT - CONT'D** | | | | | | | |
| 9-58-14 | LOCK, Manifold Heat Control Thermostat Shield | 6-8 | 60 | 60 | 60 | 60 | 1 | 1409 594 |
| | PP2 w/Ram Manifold, PD4-D500, PD1-D500, PD2-D500, PS1 w/Ram Manifold, PS3 w/Ram Manifold, PC3-300 | 8 | 60 | 60 | 60 | 60 | 2 | 1409 594 |
| **9-59-0** | **MANIFOLD HEAT CONTROL VALVE** | | | | | | | |
| 9-59-13 | SPRING, Manifold Heat Control Valve | 6-8 | 60 | 60 | 60 | 60 | 1 | 1558 897 |
| | PP2 w/Ram Manifold, PD4-D500, PD1-D500, PD2-D500, PS1 w/Ram Manifold, PS3 w/Ram Manifold, PC3-300 | 8 | 60 | 60 | 60 | 60 | 2 | 1558 897 |
| 9-59-15 | PIN, Spring | 6-8 | 60 | 60 | 60 | 60 | 1 | 1639 597 |
| | PP2 w/Ram Manifold, PD4-D500, PD1-D500, PD2-D500, PS1 w/Ram Manifold, PS3 w/Ram Manifold, PC3-300 | 8 | 60 | 60 | 60 | 60 | 2 | 1639 597 |
| **9-62-0** | **MANIFOLD HEAT CONTROL VALVE STOP** | | | | | | | |
| 9-62-1 | STOP | 6 | 60 | 60 | - | - | 1 | 2121 455 |
| | | | 60 | 60 | 60 | 60 | 1 | 683 057 |
| | PP2 w/Ram Manifold, PD4-D500, PD1-D500, PD2-D500, PS1 w/Ram Manifold, PS3 w/Ram Manifold, PC3-300 | 8 | 60 | 60 | 60 | 60 | 2 | 683 057 |
| **9-64-0** | **ENGINE FRONT SUPPORT** | | | | | | | |
| 9-64-5 | SUPPORT, Right, PD4 | 8 | 60 | 60 | - | - | 1 | 2120 236 |
| | Left, PD4 | 8 | 60 | 60 | - | - | 1 | 2120 232 |
| | PP2 w/High Performance, PP2 w/Ram Manifold, PD4 w/High Performance, PD4-D500, PD1, PD2, PC1, Right | 8 | 60 | 60 | 60 | 60 | 1 | 2120 238 |
| | PP2 w/High Performance, PP2 w/Ram Manifold, PD4 w/High Performance, PD4-D500, PD1, PD2, PC1, Left | 8 | 60 | 60 | 60 | 60 | 1 | 2120 237 |
| | PC2, PC3, PY1, Right | 8 | - | - | - | 60 | 1 | 2128 572 |
| | PC2, PC3, PY1, Left | 8 | - | - | - | 60 | 1 | 2128 571 |
| 9-64-13 | STUD, Engine Front Support to Frame | 8 | 60 | 60 | 60 | 60 | 2 | 2128 773 |
| 9-64-17 | NUT, Engine Front Support to Frame Stud, UP TO | 8 | 60 | 60 (1) | 60 (1) | 60 (1) | 2 | *2128 775 |
| | NUT, Engine Front Support to Frame Stud, AFTER | 8 | - | 60 (1) | 60 (1) | 60 (1) | 2 | ⊟2202 834 |
| 9-64-18 | WASHER, Engine Front Support to Frame Stud | 8 | 60 | 60 | 60 | 60 | 2 | 2128 774 |
| 9-64-22 | SHIELD, Engine Front Support Heat, Left | 6 | 60 | 60 | - | - | 1 | 2128 999 |
| | PD4, Right | 8 | 60 | 60 | - | - | 1 | 2128 943 |
| | PD4, Left | 8 | 60 | 60 | - | - | 1 | 2128 944 |
| | PP2 Ram Manifold, PP2 w/High Performance, PD1, PD2, PD4-D500, PD4 w/High Performance, Right | 8 | 60 | 60 | 60 | 60 | 1 | 2128 935 |
| | PP2 Ram Manifold, PP2 w/High Performance, PD1, PD2, PD4-D500, PD4 w/High Performance, Left | 8 | 60 | 60 | 60 | 60 | 1 | 2128 936 |
| **9-67-0** | **ENGINE FRONT SUPPORT INSULATOR** | | | | | | | |
| 9-67-4 | INSULATOR, Right | 6 | 60 | 60 | - | - | 1 | 2128 479 |
| | Left | 6 | 60 | 60 | - | - | 1 | 2128 821 |

NOTE 1: RD2 Serial No. 6103114084, RS1 Serial No. 7203119431, PC1 Serial No. 8103138130.



MyMopar.com

| CODE | PART NAME AND DESCRIPTION | NO. OF CYL. | PLYMOUTH | DODGE | DESOTO | CHRYSLER AND IMPERIAL | PER CAR | PART NUMBER |
|---|---|---|---|---|---|---|---|---|
| **9-69-0** | **FRAME ENGINE REAR SUPPORT CROSSMEMBER** | | | | | | | |
| 9-69-4 | CROSSMEMBER, w/Automatic Trans. | 6 | 60 | 60 | - | - | 1 | 2123 346 |
| | PC1 | 6-8 | 60 | 60 | 60 | 60 | 1 | 2122 578 |
| | PC2, PC3 | 8 | - | - | - | 60 | 1 | 2122 575 |
| | Cv.Cp., PY1 | 8 | - | - | - | 60 | 1 | 1940 304 |
| | Except Cv. Cp., PY1 | 8 | - | - | - | 60 | 1 | 1829 984 |
| 9-69-6 | BRACKET, Frame Engine Rear Support Crossmember, Right, Cv.Cp., PY1 | 8 | - | - | - | 60 | 1 | 1940 300 |
| | Left, Cv.Cp., PY1 | 8 | - | - | - | 60 | 1 | 1940 301 |
| 9-69-28 | SCREW, w/WASHER, w/Automatic Trans. | 6 | 60 | 60 | - | - | 2 | 2200 024 |
| **9-70-0** | **FRAME ENGINE REAR SUPPORT CROSSMEMBER BRACKET** | | | | | | | |
| 9-70-9 | NUT, Frame Engine Rear Support Crossmember to Bracket Bolt, PC1, PC2, PC3 | 8 | 60 | 60 | 60 | 60 | 4 | 1946 141 |
| **9-71-0** | **ENGINE REAR SUPPORT INSULATOR** | | | | | | | |
| 9-71-5 | INSULATOR | 6 | 60 | 60 | - | - | 1 | 1946 362 |
| | PC1, PC2, PC3, PY1 except Cv.Cp. | 8 | 60 | 60 | 60 | 60 | 1 | 1734 529 |
| | PY1 Cv.Cp. | 8 | - | - | - | 60 | 1 | 1533 850 |
| 9-71-15 | STOP, PC1, PC2, PC3 | 6-8 | 60 | 60 | 60 | 60 | 1 | 2122 280 |
| 9-71-16 | SPRING, PC1, PC2, PC3 | 6-8 | 60 | 60 | 60 | 60 | 1 | 2122 278 |
| 9-71-17 | PLATE, Spring, PC1, PC2, PC3 | 6-8 | 60 | 60 | 60 | 60 | 1 | 2122 277 |
| 9-71-18 | STUD, w/WASHER, PC1, PC2, PC3 | 6-8 | 60 | 60 | 60 | 60 | 1 | 2122 275 |
| 9-71-19 | WASHER, Stud, Upper, PC1, PC2, PC3 | 6-8 | 60 | 60 | 60 | 60 | 1 | 2122 279 |

## NOTES



MyMopar.com

# GROUP 10 - ENGINE OILING

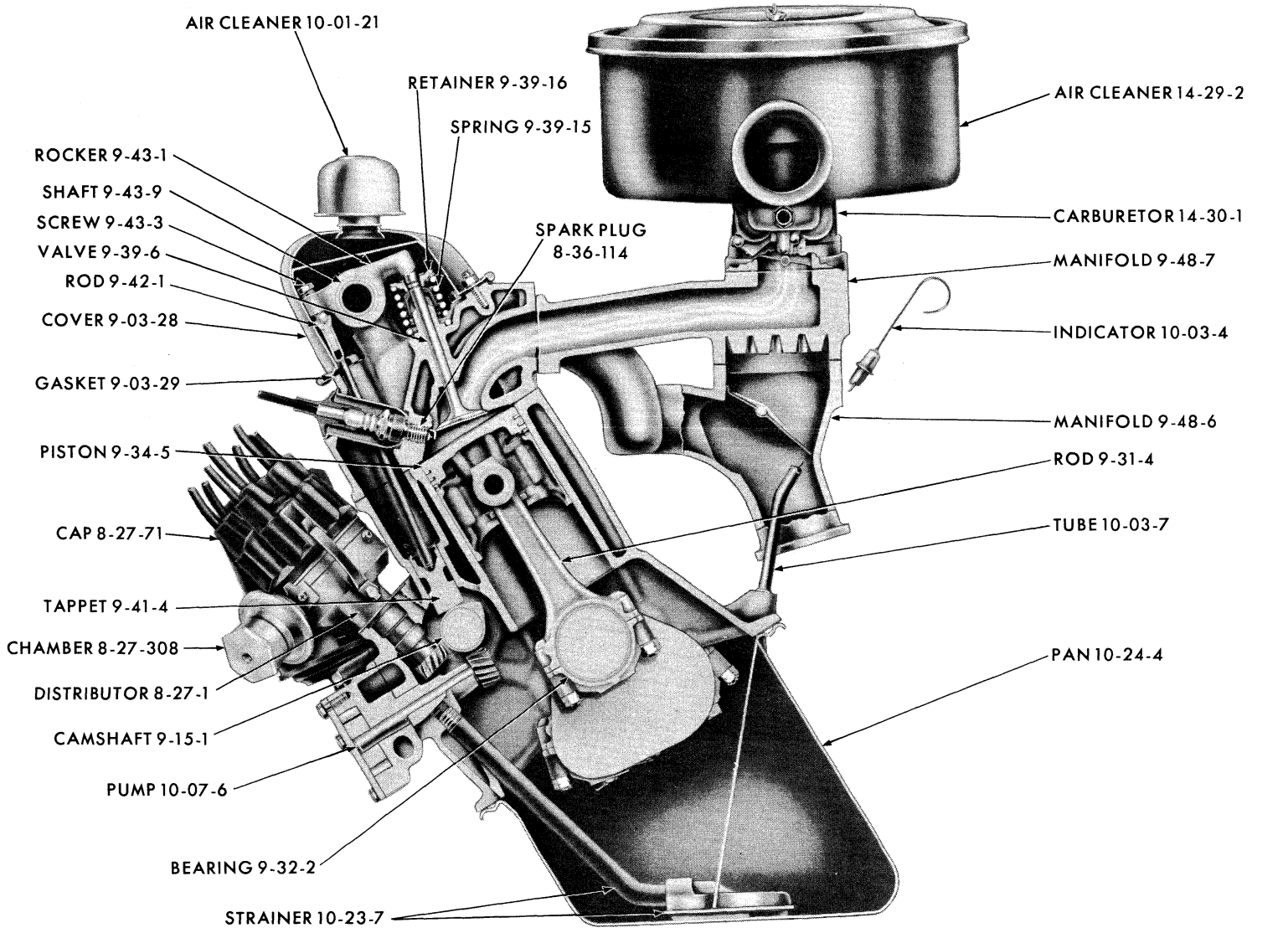


19x8778

ENGINE OILING - 6 CYLINDER

MyMopar.com

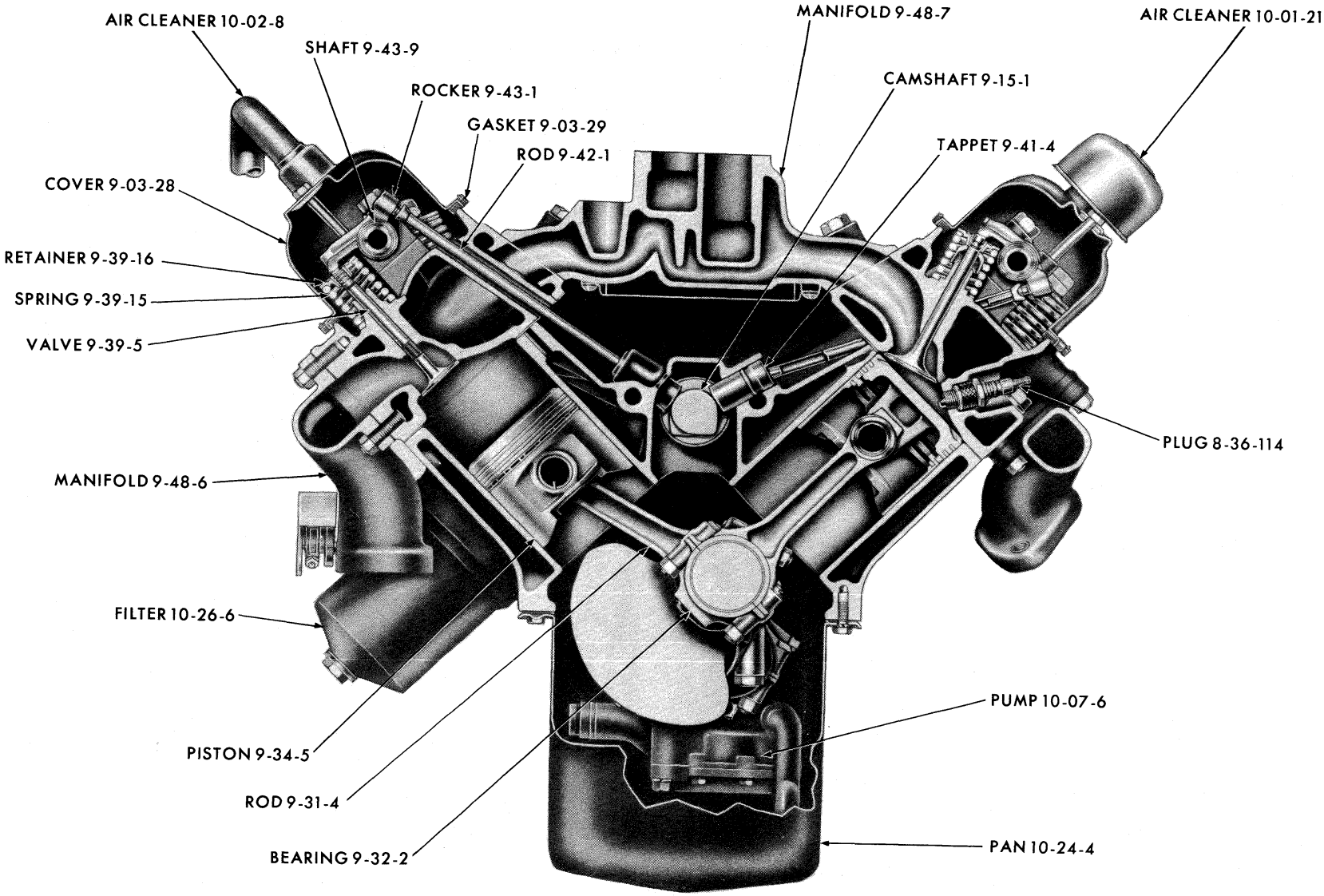


ENGINE OILING (V8 CYLINDER - STANDARD) - PLYMOUTH PP2, DODGE PD4

MyMopar.com

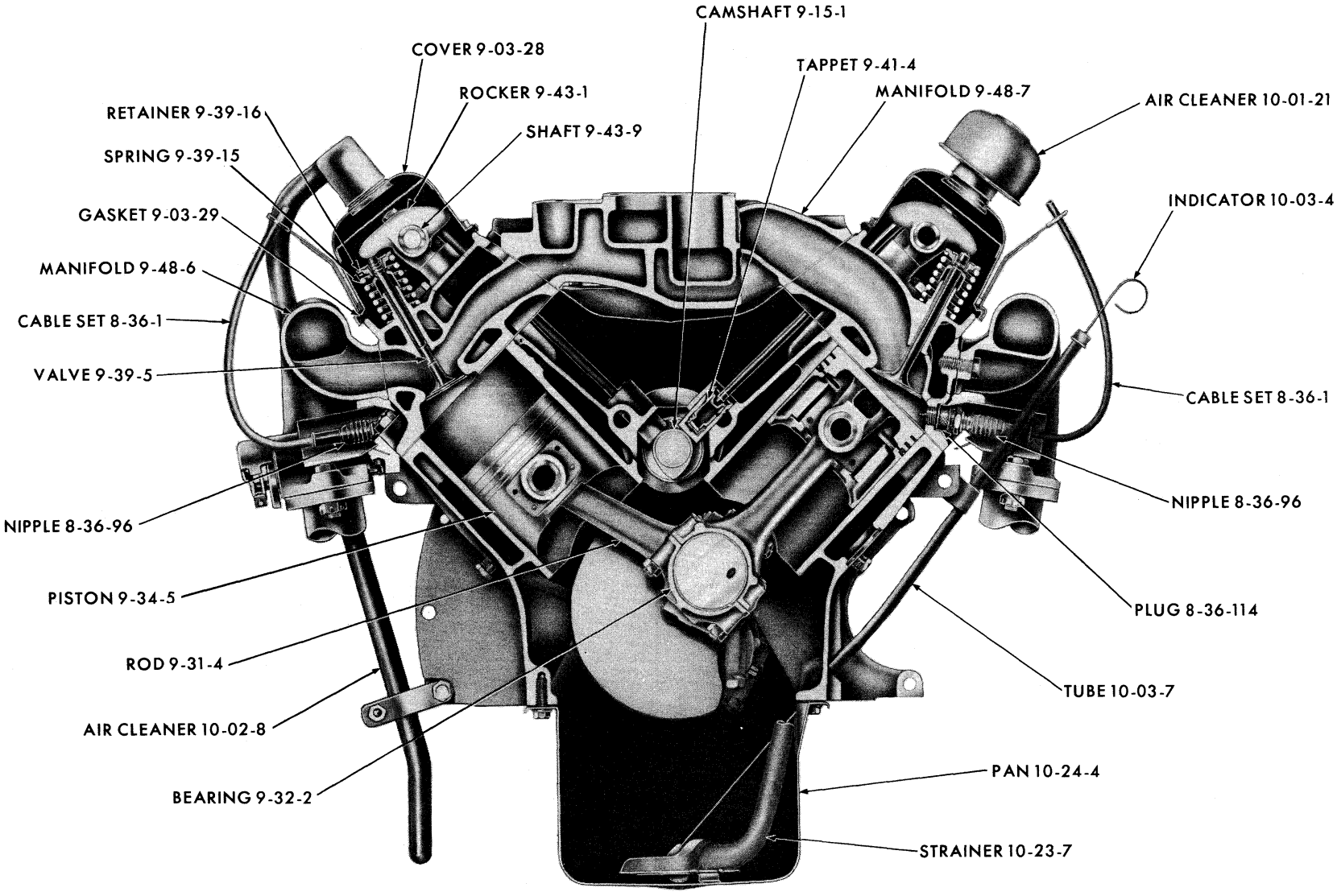


ENGINE OILING (V8 CYLINDER) - PLYMOUTH PP2 (EXCEPT STANDARD), DODGE PD1-2, DODGE PD4 (EXCEPT STANDARD)

MyMopar.com

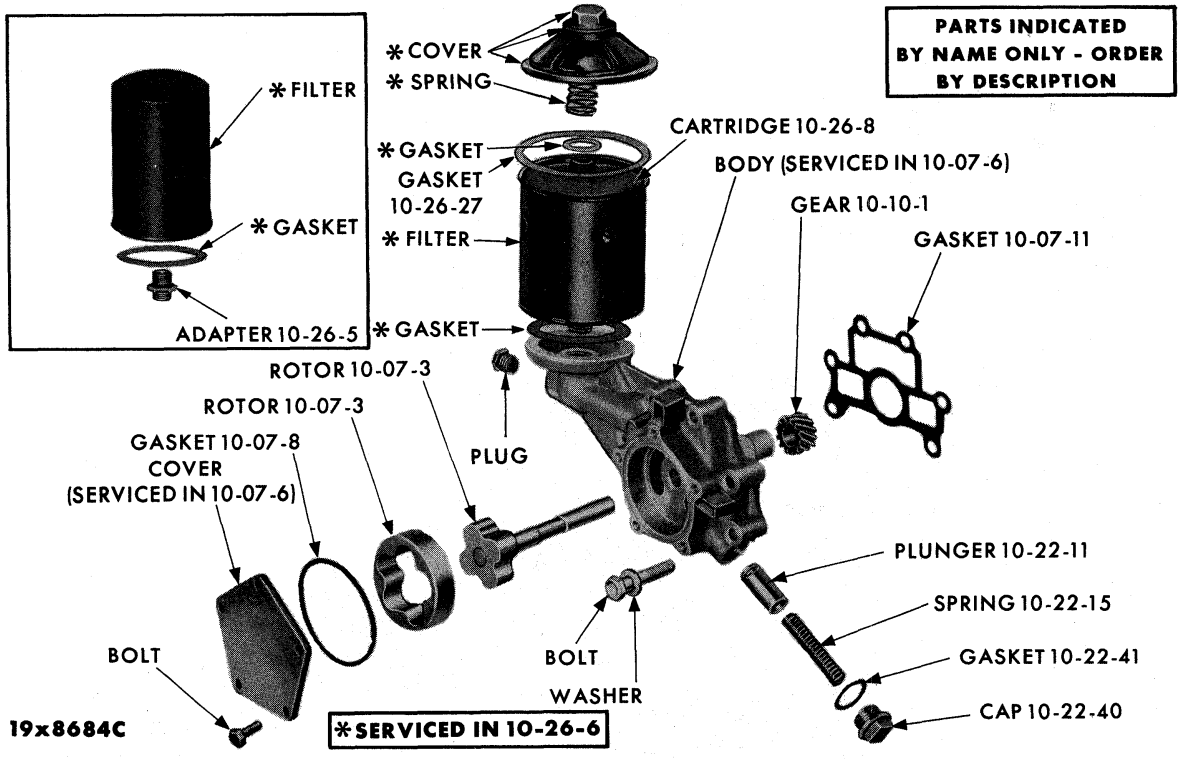


OIL PUMP AND FILTER - 6 CYLINDER

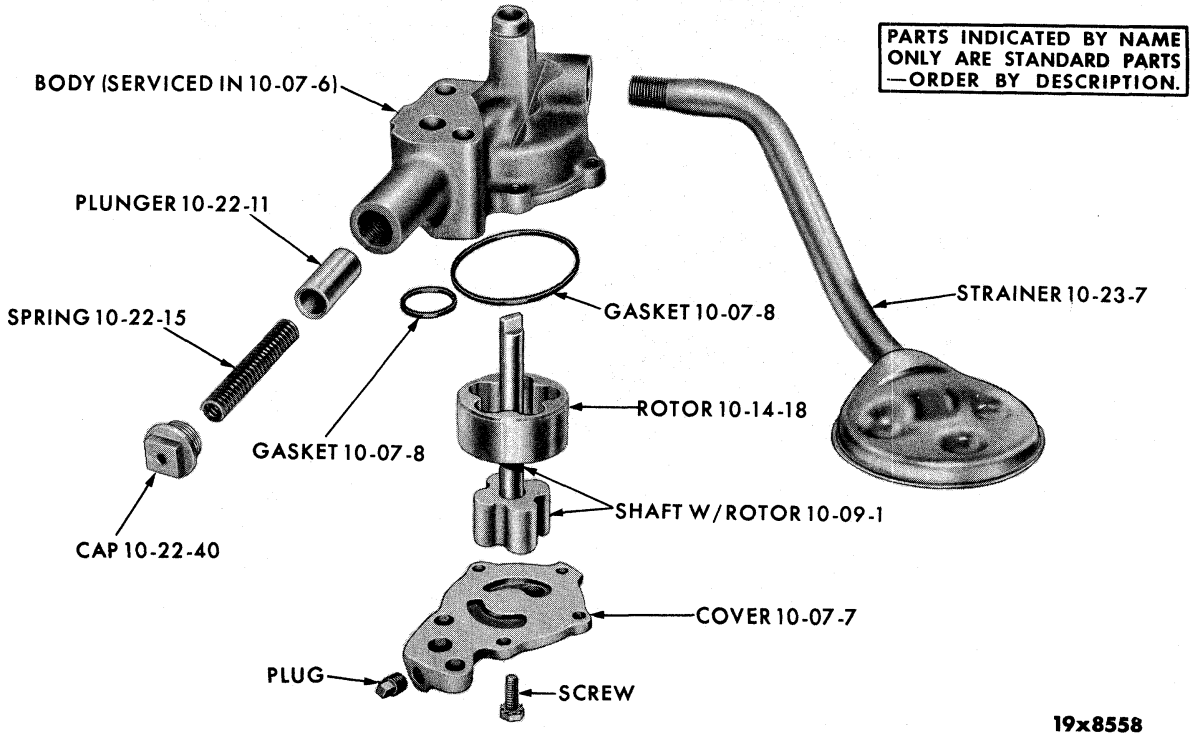


OIL PUMP (V8 CYLINDER) - EXCEPT HIGH PERFORMANCE ENGINE



MyMopar.com

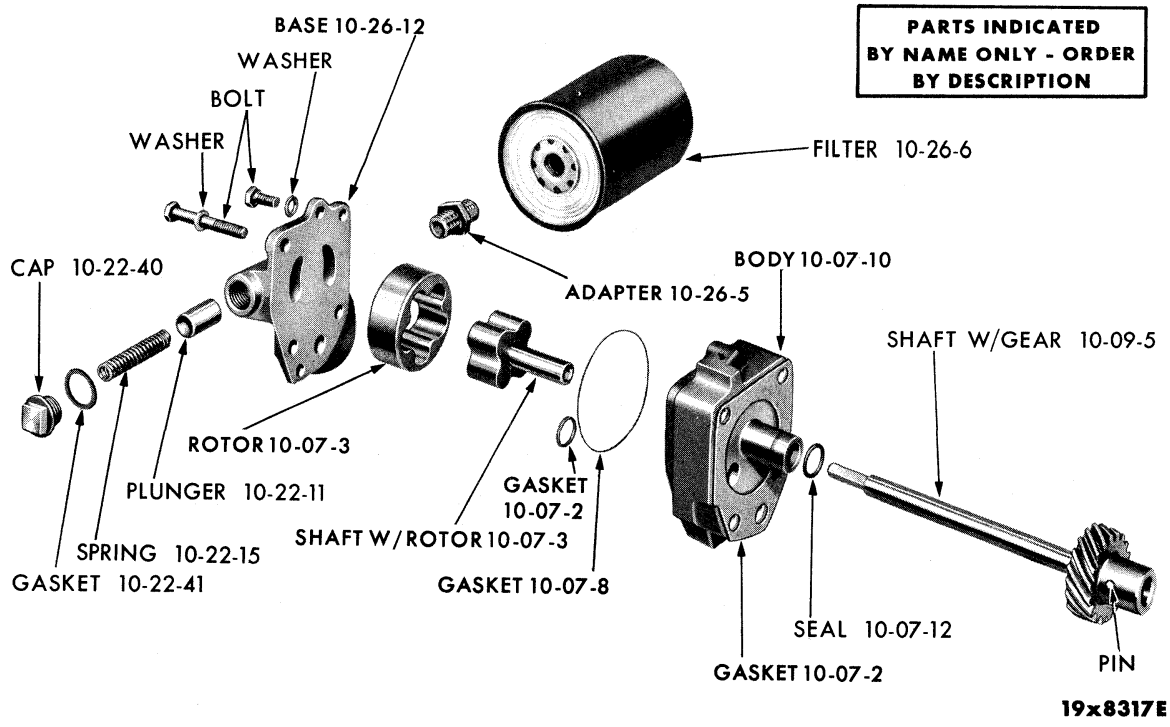


OIL PUMP (V8 CYLINDER) - WITH HIGH PERFORMANCE ENGINE

## NOTES



MyMopar.com

| CODE | PART NAME AND DESCRIPTION | NO. OF CYL. | PLYMOUTH | DODGE | DESOTO | CHRYSLER AND IMPERIAL | PER CAR | PART NUMBER |
|---|---|---|---|---|---|---|---|---|

## NOTES


MyMopar.com

# GROUP 10 - ENGINE OILING

## 10-01-0 CRANKCASE BREATHER PIPE INLET

| CODE | PART NAME AND DESCRIPTION | NO. OF CYL. | PLYMOUTH | DODGE | DESOTO | CHRYSLER AND IMPERIAL | PER CAR | PART NUMBER |
|---|---|---|---|---|---|---|---|---|
| 10-01-21 | AIR CLEANER, Inlet, use w/o Outlet Air Cleaner, PP1, PD3 | 6 | 60 | 60 | - | - | 1 | 1821 198 |
| | Use w/Outlet Air Cleaner, PP1, PD3 | 6 | 60 | 60 | - | - | 1 | 1821 200 |
| | PP2, PD1, PD2, PD4 | 8 | 60 | 60 | 60 | 60 | 1 | 1821 198 |
| | Use w/Outlet Air Cleaner, PP2, PD1, PD2, PD4 | 8 | 60 | 60 | - | - | 1 | 1821 200 |

## 10-02-0 CRANKCASE VENTILATOR OUTLET

| | | | | | | | | |
|---|---|---|---|---|---|---|---|---|
| 10-02-8 | AIR CLEANER, PP2, w/High Performance or Ram Manifold | 8 | 60 | - | - | - | 1 | 1825 922 |
| | PD1, PD2, PD4 w/High Performance, PD4-D500, PS3, Export | 8 | - | 60 | 60 | 60 | 1 | *1825 922 |
| 10-02-15 | PIPE, use w/o Air Cleaner, PP1, PD3 | 6 | 60 | 60 | - | - | 1 | 2128 568 |
| | w/Air Cleaner, PP1, PD3 | 6 | 60 | 60 | - | - | 1 | 2128 626 |
| | Use w/o Air Cleaner, PP2, PD4, w/o High Performance or Ram Manifold | 8 | 60 | 60 | - | - | 1 | 1945 190 |
| | w/Air Cleaner, PP2, PD4, w/o High Performance or Ram Manifold | 8 | 60 | 60 | - | - | 1 | 1945 191 |
| | Use w/Air Cleaner, PP2 w/High Performance or Ram Manifold | 8 | 60 | - | - | - | 1 | 1852 058 |
| | Use w/o Air Cleaner, PP2, PD4, w/High Performance or Ram Manifold, PD1, PD4-D500, PS3, LHD. | 8 | 60 | 60 | 60 | 60 | 1 | 1852 057 |
| | Use w/Air Cleaner, PD1, PD2, PD4 w/High Performance or Ram Manifold, PD4-D500, PS3, Export | 8 | - | 60 | 60 | 60 | 1 | 1852 058 |

## 10-03-0 OIL LEVEL INDICATOR

| | | | | | | | | |
|---|---|---|---|---|---|---|---|---|
| 10-03-4 | INDICATOR, PP1, PD3 | 6 | 60 | 60 | - | - | 1 | 2128 424 |
| | PP2, PD4, w/o High Performance or Ram Manifold | 8 | 60 | 60 | - | - | 1 | 1858 906 |
| | PP2, PD4, w/High Performance or Ram Manifold, PD1, PD2, PD4-D500, PS1, PS3, PC1, PC2, PC3 | 8 | 60 | 60 | 60 | 60 | 1 | 1858 907 |
| | PY1 | 8 | - | - | - | 60 | 1 | 1858 907 |
| 10-03-7 | TUBE, PP1, PD3 | 6 | 60 | 60 | - | - | 1 | 1859 788 |
| | PP2, PD4, w/o High Performance or Ram Manifold | 8 | 60 | 60 | - | - | 1 | 1859 788 |
| | PP2, PD4, w/High Performance or Ram Manifold, PD1, PD2, PD4-D500 | 8 | 60 | 60 | 60 | 60 | 1 | 1944 652 |

## 10-07-0 OIL PUMP

| | | | | | | | | |
|---|---|---|---|---|---|---|---|---|
| 10-07-2 | GASKET and SEAL PACKAGE, PP2, PD4. w/High Performance or Ram Manifold, PD1, PD2, PD4-D500 | 8 | 60 | 60 | 60 | 60 | 1 | 2084 355 |
| 10-07-3 | SHAFT and ROTOR PACKAGE, PP1, PD3 | 6 | 60 | 60 | - | - | 1 | 2084 415 |
| | PP2, PD4, w/High Performance or Ram Manifold, PD1, PD2, PD4-D500 | 8 | 60 | 60 | 60 | 60 | 1 | 2084 354 |
| 10-07-6 | PUMP, PP1, PD3 | 6 | 60 | 60 | - | - | 1 | 1947 221 |
| | PP2, PD4, w/o High Performance or Ram Manifold | 8 | 60 | 60 | - | - | 1 | 1618 949 |
| | PP2, PD4, w/High Performance or Ram Manifold, PD1, PD2, PD4-D500 | 8 | 60 | 60 | 60 | 60 | 1 | 2120 870 |
| 10-07-7 | COVER, PP2, PD4, w/o High Performance or Ram Manifold | 8 | 60 | 60 | - | - | 1 | 1406 254 |



MyMopar.com

| CODE | PART NAME AND DESCRIPTION | NO. OF CYL. | PLYMOUTH | DODGE | DESOTO | CHRYSLER AND IMPERIAL | PER CAR | PART NUMBER |
|---|---|---|---|---|---|---|---|---|
| **10-07-0** | **OIL PUMP - Cont'd** | | | | | | | |
| 10-07-8 | GASKET, Cover, PP1, PD3 | 6 | 60 | 60 | - | - | 1 | 1737 727 |
| | Small, PP2, PD4, w/o High Performance or Ram Manifold | 8 | 60 | 60 | - | - | 1 | 1552 291 |
| | Large, PP2, PD4, w/o High Performance or Ram Manifold | 8 | 60 | 60 | - | - | 1 | 1124 984 |
| | Large, PP2, PD4, w/High Performance or Ram Manifold, PD1, PD2, PD4-D500 | 8 | 60 | 60 | 60 | 60 | 1 | 1737 727 |
| 10-07-10 | BODY, PP2, PD4, w/High Performance or Ram Manifold, PD1, PD2, PD4-D500 | 8 | 60 | 60 | 60 | 60 | 1 | 1737 718 |
| 10-07-11 | GASKET, Body, PP1, PD3 | 6 | 60 | 60 | - | - | 1 | 2121 404 |
| 10-07-12 | SEAL, Body, PP2, PD4, w/High Performance or Ram Manifold, PD1, PD2, PD4-D500 | 8 | 60 | 60 | 60 | 60 | 1 | 1855 328 |
| **10-09-0** | **OIL PUMP DRIVE SHAFT** | | | | | | | |
| 10-09-1 | SHAFT, w/Inner ROTOR, PP2, PD4, w/o High Performance or Ram Manifold | 8 | 60 | 60 | - | - | 1 | 1618 950 |
| 10-09-5 | SHAFT, Oil Pump and Distributor Drive, w/GEAR, PP2, PD4, w/o High Performance or Ram Manifold | 8 | 60 | 60 | - | - | 1 | 1323 369 |
| | PP2, PD4, w/High Performance or Ram Manifold, PD1, PD2, PD4-D500 | 8 | 60 | 60 | 60 | 60 | 1 | 1739 604 |
| 10-09-7 | BUSHING, PP2, PD4, w/o High Performance or Ram Manifold | 8 | 60 | 60 | - | - | 1 | 1324 281 |
| | PP2, PD4, w/High Performance or Ram Manifold, PD1, PD2, PD4-D500 | 8 | 60 | 60 | 60 | 60 | 1 | 1737 725 |
| **10-10-0** | **OIL PUMP DRIVE GEAR** | | | | | | | |
| 10-10-1 | GEAR, PP1, PD3 | 6 | 60 | 60 | - | - | 1 | 1947 225 |
| **10-14-0** | **OIL PUMP ROTOR** | | | | | | | |
| 10-14-18 | ROTOR, Outer, PP2, PD4, w/o High Performance or Ram Manifold | 8 | 60 | 60 | - | - | 1 | 1324 264 |
| | PP2, PD4, w/High Performance or Ram Manifold, PD1, PD2, PD4-D500 | 8 | 60 | 60 | 60 | 60 | 1 | 1737 722 |
| 10-14-19 | PIN, PP2, PD4, w/o High Performance or Ram Manifold | 8 | 60 | 60 | - | - | 1 | 867 386 |
| **10-22-0** | **OIL PRESSURE RELIEF VALVE** | | | | | | | |
| 10-22-11 | PLUNGER, PP1, PD3 | 6 | 60 | 60 | - | - | 1 | 2120 764 |
| | PP2, PD4, w/o High Performance or Ram Manifold | 8 | 60 | 60 | - | - | 1 | 1324 282 |
| | PP2, PD4, w/High Performance or Ram Manifold, PD1, PD2, PD4-D500 | 8 | 60 | 60 | 60 | 60 | 1 | 2120 764 |
| 10-22-15 | SPRING, Std., Red., PP1, PD3 | 6 | 60 | 60 | - | - | 1 | 1737 742 |
| | Light, Gray, PP1, PD3 | 6 | 60 | 60 | - | - | 1 | 1737 743 |
| | Heavy, Brown, PP1, PD3 | 6 | 60 | 60 | - | - | 1 | 1737 744 |
| | Std., Red, PP2, PD4, w/o High Performance or Ram Manifold | 8 | 60 | 60 | - | - | 1 | 1328 352 |
| | Light, Gray, PP2, PD4, w/o High Performance or Ram Manifold | 8 | 60 | 60 | - | - | 1 | 1400 502 |
| | Heavy, Brown, PP2, PD4, w/o High Performance or Ram Manifold | 8 | 60 | 60 | - | - | 1 | 1400 503 |
| | Std., Red, PP2, PD4, w/High Performance or Ram Manifold, PD1, PD2, PD4-D500 | 8 | 60 | 60 | 60 | 60 | 1 | 1737 742 |


MyMopar.com

| CODE | PART NAME AND DESCRIPTION | NO. OF CYL. | PLYMOUTH | DODGE | DESOTO | CHRYSLER AND IMPERIAL | PER CAR | PART NUMBER |
|---|---|---|---|---|---|---|---|---|
| **10-22-0** | **OIL PRESSURE RELIEF VALVE - Cont'd** | | | | | | | |
| 10-22-15 | SPRING - Cont'd | | | | | | | |
| | Light, Gray, PP2, PD4, w/High Performance or Ram Manifold, PD1, PD2, PD4-D500 | 8 | 60 | 60 | 60 | 60 | 1 | 1737 743 |
| | Heavy, Brown, PP2, PD4, w/High Performance or Ram Manifold, PD1, PD2, PD4-D500 | 8 | 60 | 60 | 60 | 60 | 1 | 1737 744 |
| 10-22-40 | CAP, Plunger, PP1, PD3 | 6 | 60 | 60 | - | - | 1 | 618 621 |
| | PP2, PD4, w/o High Performance or Ram Manifold | 8 | 60 | 60 | - | - | 1 | 1946 960 |
| | PP2, PD4, w/High Performance or Ram Manifold, PD1, PD2, PD4-D500 | 8 | 60 | 60 | 60 | 60 | 1 | 618 621 |
| 10-22-41 | GASKET, Cap, PP1, PD3, All | 6 | 60 | 60 | - | - | 1 | 618 622 |
| | PP2, PD4, w/High Performance or Ram Manifold, PD1, PD2, PD4-D500 | 8 | 60 | 60 | 60 | 60 | 1 | 618 622 |
| **10-23-0** | **OIL STRAINER** | | | | | | | |
| 10-23-7 | STRAINER, PP1, PD3 | 6 | 60 | 60 | - | - | 1 | 2128 575 |
| | PP2, PD4, w/o High Performance or Ram Manifold | 8 | 60 | 60 | - | - | 1 | 1821 168 |
| | PP2, PD4, w/High Performance or Ram Manifold, PD1, PD2, PD4-D500 | 8 | 60 | 60 | 60 | 60 | 1 | 1859 947 |
| **10-24-0** | **OIL PAN** | | | | | | | |
| 10-24-1 | GASKET SET, PP1, PD3 | 6 | 60 | 60 | - | - | 1 | ⊟2240 647 |
| | PP2, PD4, w/o High Performance or Ram Manifold | 8 | 60 | 60 | - | - | 1 | 1879 520 |
| 10-24-4 | PAN, PP1, PD3 | 6 | 60 | 60 | - | - | 1 | 2121 707 |
| | PP2, PD4, w/o High Performance or Ram Manifold | 8 | 60 | 60 | - | - | 1 | 1828 140 |
| | PP2, PD4, w/High Performance or Ram Manifold, PD1, PD2, PD4-D500 | 8 | 60 | 60 | 60 | 60 | 1 | 1944 694 |
| 10-24-8 | GASKET, PP2, PD4, w/High Performance or Ram Manifold, PD1, PD2, PD4-D500 | 8 | 60 | 60 | 60 | 60 | 1 | 1737 770 |
| 10-24-23 | SCREW, Pan Attaching, PP1, PD3 | 6 | 60 | 60 | - | - | 24 | 1947 953 |
| | PP2, PD1, PD2, PD4 | 8 | 60 | 60 | 60 | 60 | 18 | *1947 953 |
| | To Bearing Seal Retainer, PP2, PD4, w/High Performance or Ram Manifold, PD1, PD2, PD4-D500 | 8 | 60 | 60 | 60 | 60 | 2 | 2121 573 |
| 10-24-37 | PLUG, Drain, 5/8"-18 x 5/16" | 6-8 | 60 | 60 | 60 | 60 | 1 | 1855 247 |
| | PP2, PD4, 5/8"-18 x 1/2" | 8 | 60 | 60 | - | - | 1 | 2129 370 |
| 10-24-38 | GASKET, Drain Plug, 5/8" I.D. x 7/8" O.D. | 6-8 | 60 | 60 | 60 | 60 | 1 | ⊟2129 963 |
| **10-26-0** | **OIL FILTER** | | | | | | | |
| 10-26-5 | ADAPTER, Base to Filter, PP2, PD4, w/High Performance or Ram Manifold, PP1, PD1, PD2, PD3, PD4-D500 | 6-8 | 60 | 60 | 60 | 60 | 1 | 1739 619 |
| 10-26-6 | FILTER, Replaceable Cartridge Type, PP1, PD3 | 6 | 60 | 60 | - | - | 1 | ⊟2128 548 |
| | Sealed Can Type, w/Built-in Gasket, PP2, PD4, w/High Performance or Ram Manifold, PD1, PD2, PD4-D500 | 6-8 | 60 | 60 | 60 | 60 | 1 | *1851 658 |
| 10-26-8 | CARTRIDGE or ELEMENT, PP2, PD4, w/o High Performance or Ram Manifold, LHD. | 8 | 60 | 60 | - | - | 1 | 1634 447 |
| 10-26-12 | BASE, PP2, PD4, w/High Performance or Ram Manifold, PD1, PD2, PD4-D500 | 8 | 60 | 60 | 60 | 60 | 1 | 2120 866 |
| 10-26-14 | SHELL, w/NUT, SPRING and STUD, PP2, PD4, w/o High Performance or Ram Manifold, LHD. | 8 | 60 | 60 | - | - | 1 | 1557 573 |


MyMopar.com

| CODE | PART NAME AND DESCRIPTION | NO. OF CYL. | PLYMOUTH | DODGE | DESOTO | CHRYSLER AND IMPERIAL | PER CAR | PART NUMBER |
|---|---|---|---|---|---|---|---|---|
| **10-26-0** | **OIL FILTER - Cont'd** | | | | | | | |
| 10-26-27 | GASKET, Cover, PP1, PD3 . . . . . | 6 | 60 | 60 | - | - | 1 | ⊟2129 024 |
| | PP2, PD4, w/o High Performance or Ram Manifold, LHD. . . . . | 8 | 60 | 60 | - | - | 1 | *1557 575 |
| 10-26-37 | GASKET, Spring Retainer, PP2, PD4, w/o High Performance or Ram Manifold, LHD. . | 8 | 60 | 60 | - | - | 1 | 1557 584 |
| 10-26-65 | GASKET, Oil Filter Tube Cap, PP2, PD4, w/o High Performance or Ram Manifold, LHD. . . . . | 8 | 60 | 60 | - | - | 1 | 1557 581 |

## NOTES


MyMopar.com

# GROUP 11 - EXHAUST

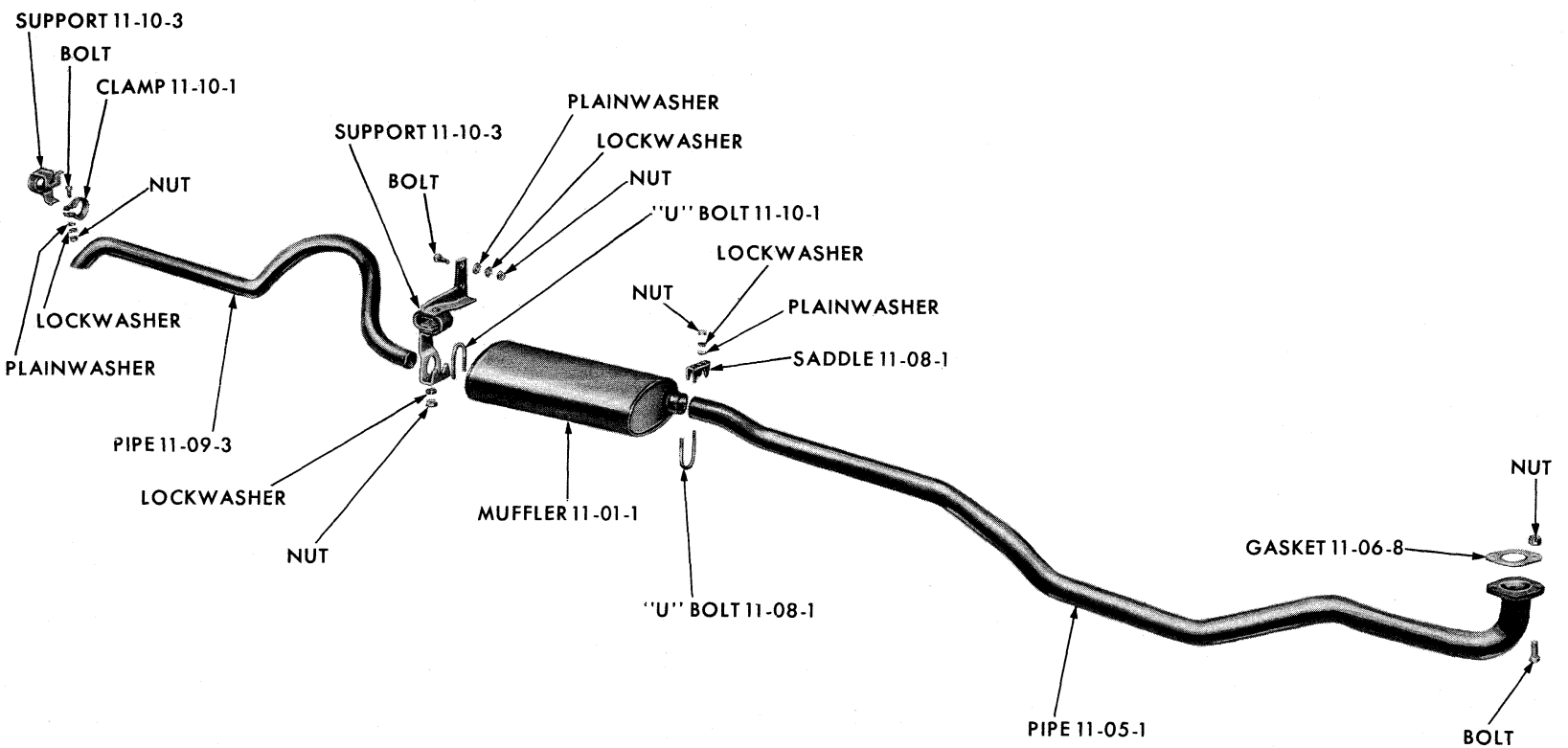


**PARTS INDICATED BY NAME ONLY - ORDER BY DESCRIPTION**

19x8644A

EXHAUST SYSTEM - PLYMOUTH PP1 AND DODGE PD3

MyMopar.com

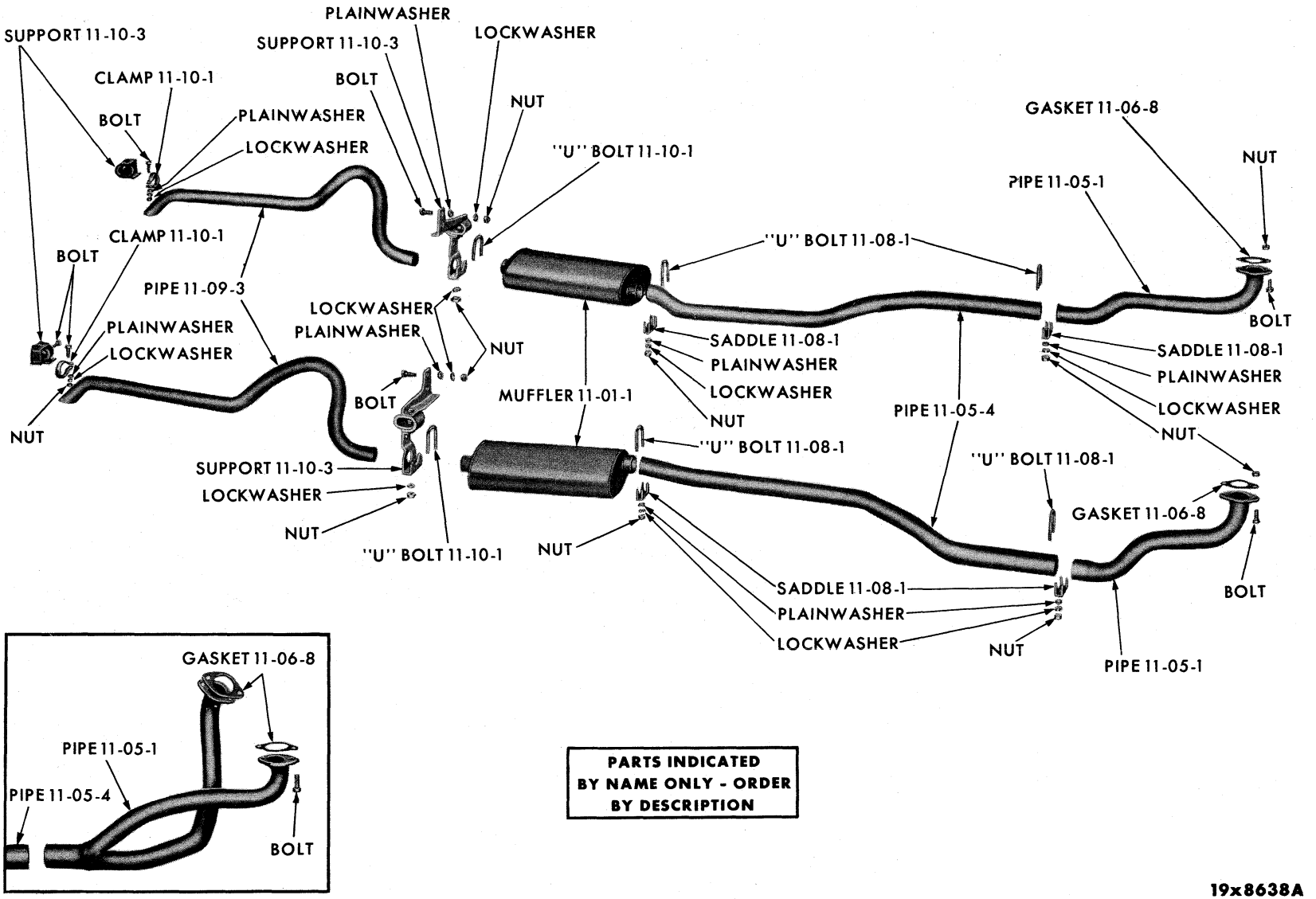


EXHAUST SYSTEM - PLYMOUTH PP2; PLYMOUTH PP2 AND DODGE PD1-2-4 (WITH HIGH PERFORMANCE ENGINE)

MyMopar.com

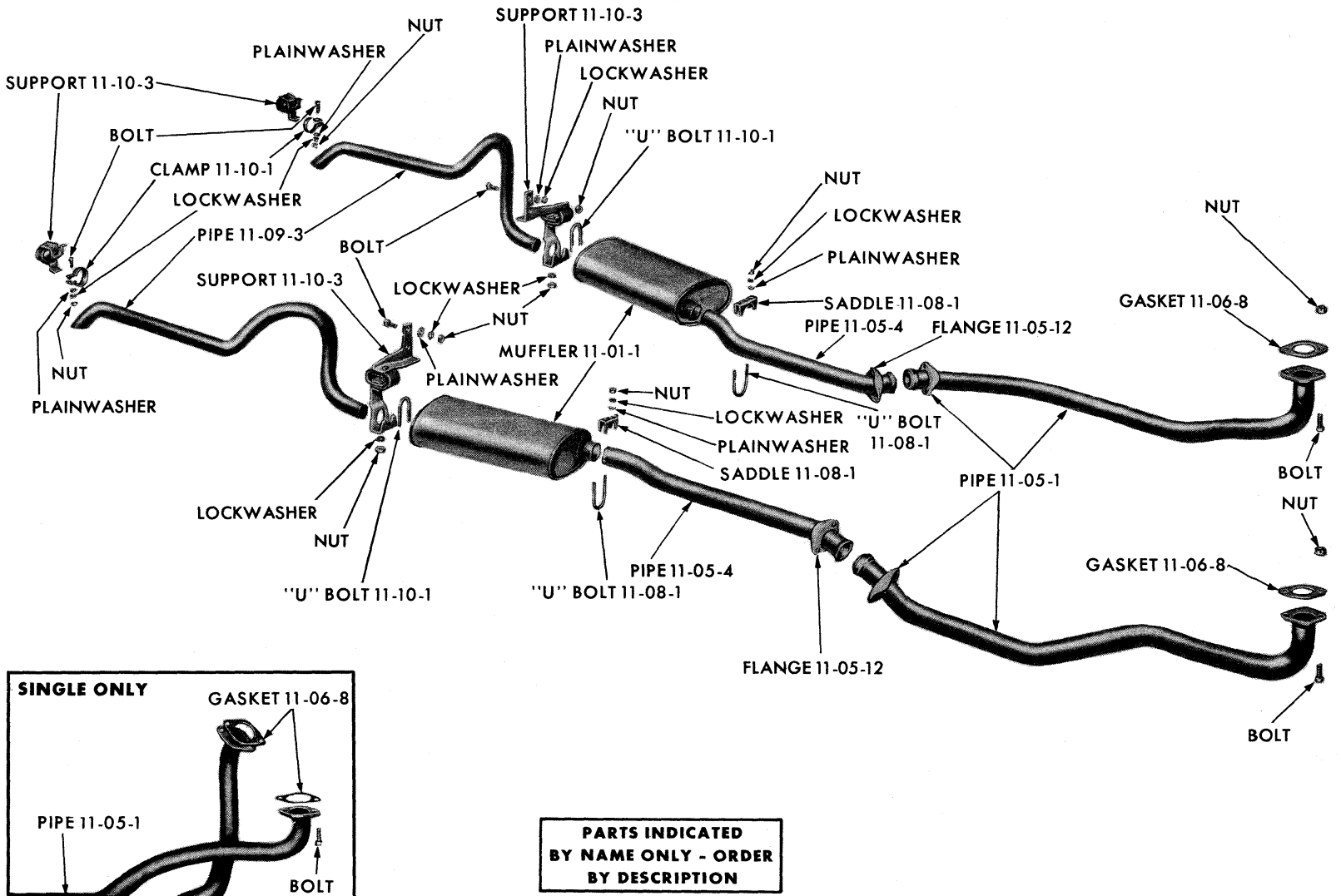





**PARTS INDICATED BY NAME ONLY - ORDER BY DESCRIPTION**

19x8639A

EXHAUST SYSTEM - DODGE PD1-2, DESOTO PS1-3 AND CHRYSLER PC1-2

MyMopar.com

Printed in U.S.A.
Page 11-3
Dec. 9, 1960 Supersedes Oct. 1, 1959.

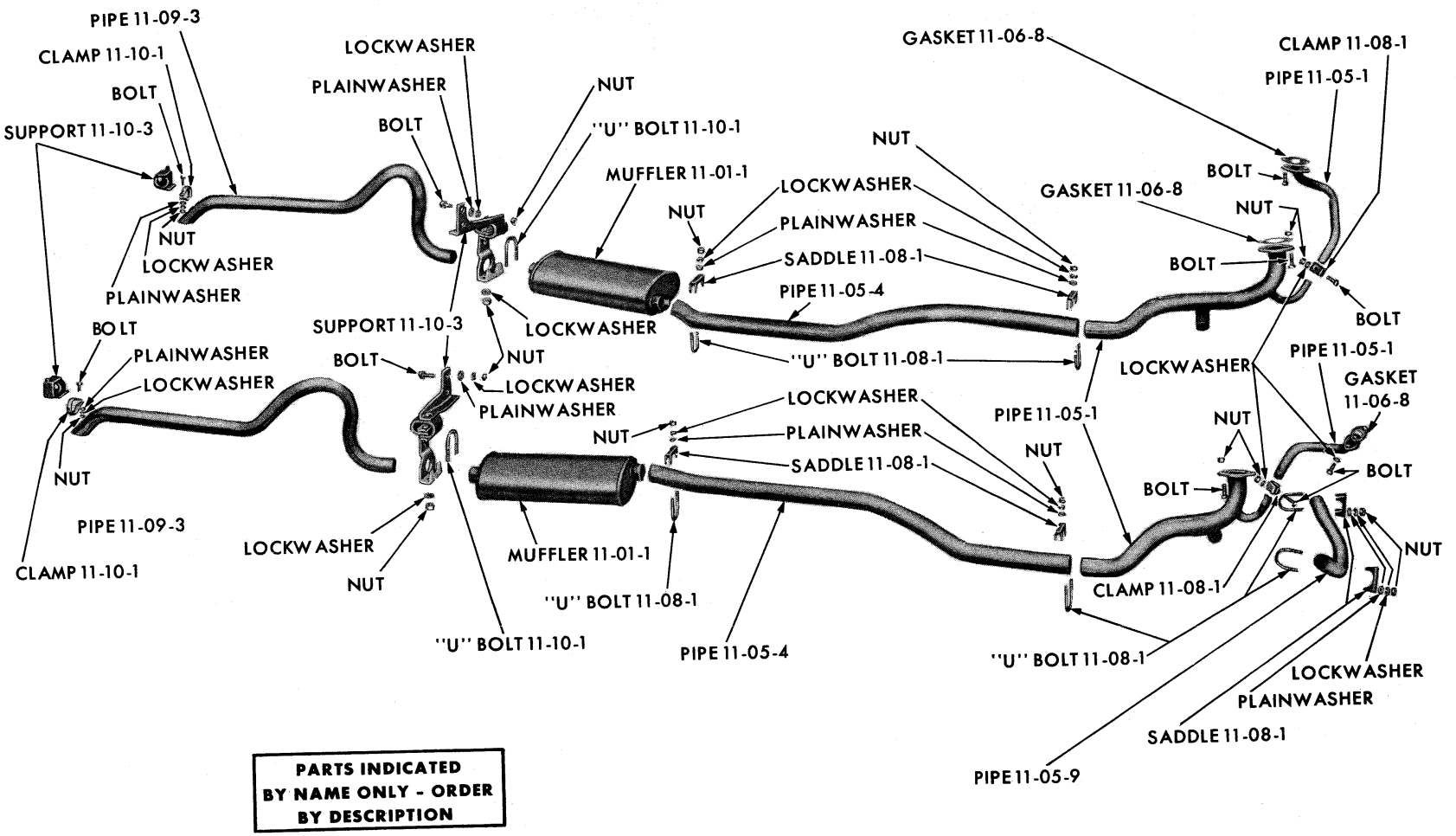


**PARTS INDICATED BY NAME ONLY - ORDER BY DESCRIPTION**

19x8640A

EXHAUST SYSTEM - PLYMOUTH PP2, DODGE PD1-2-4 AND CHRYSLER PC300F, WITH RAM MANIFOLD

MyMopar.com

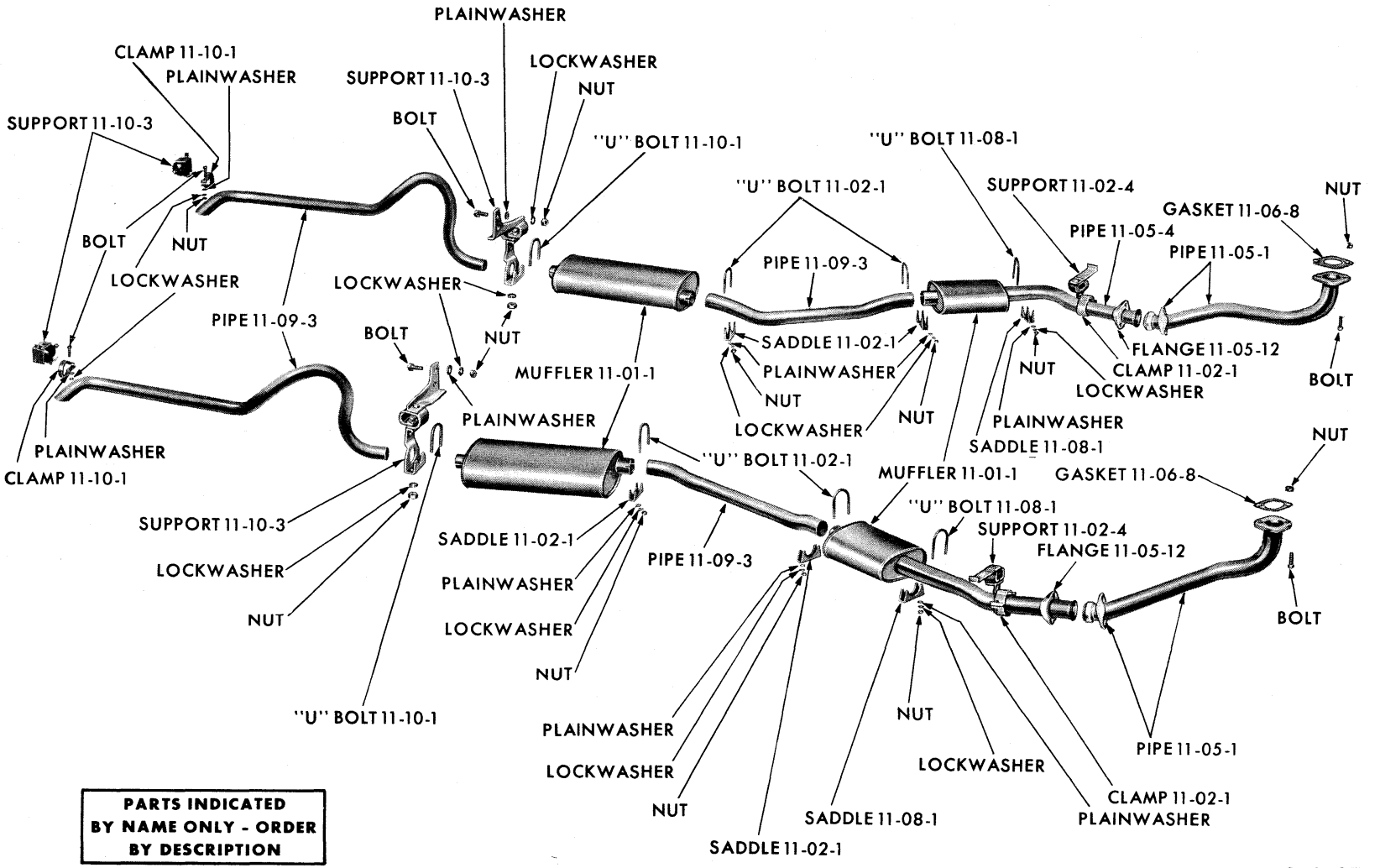


**EXHAUST SYSTEM - CHRYSLER PC2-3**

MyMopar.com

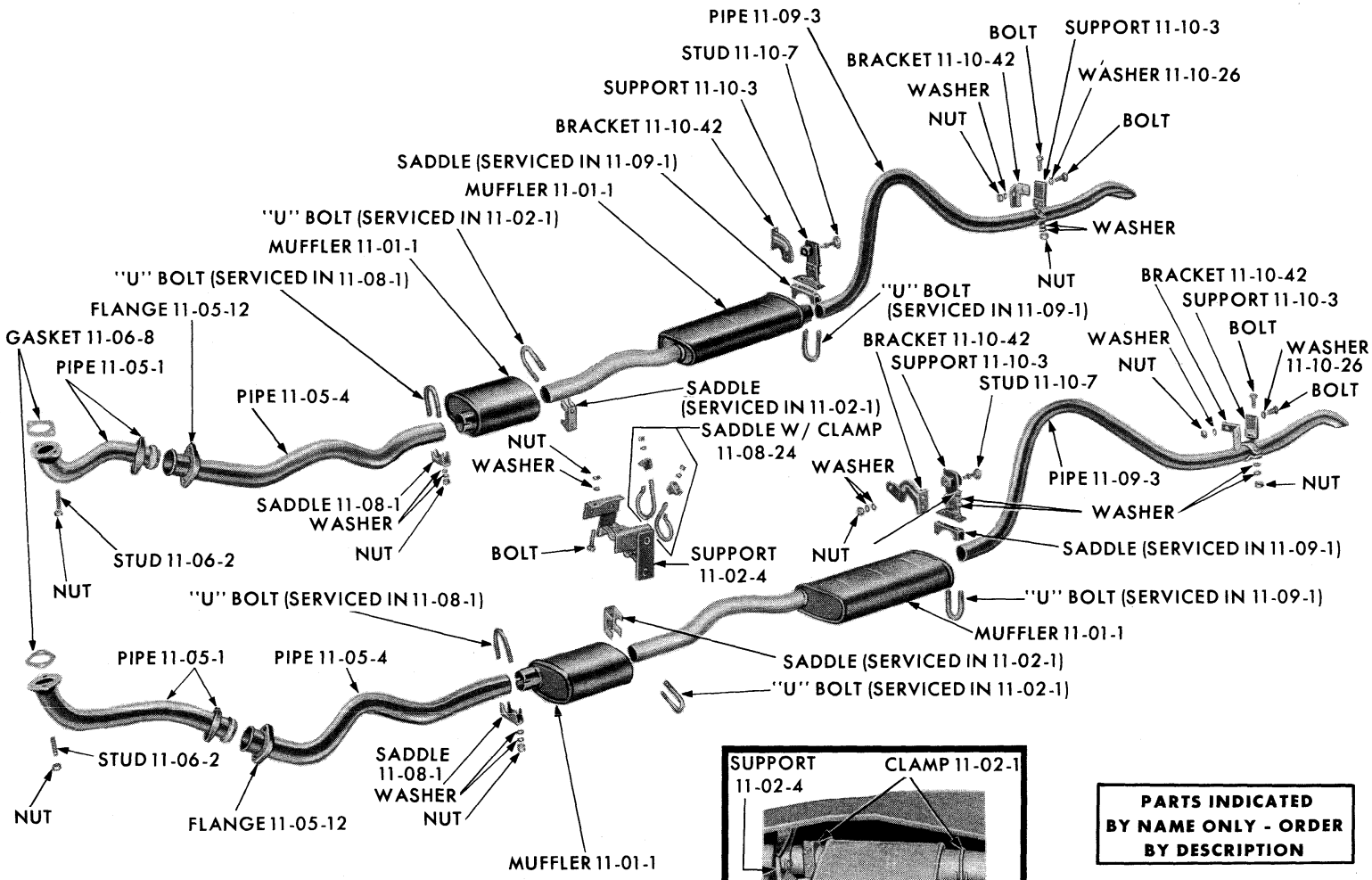


EXHAUST SYSTEM - IMPERIAL PY1

MyMopar.com

# GROUP 11 - EXHAUST

| CODE | PART NAME AND DESCRIPTION | NO. OF CYL. | PLYMOUTH | DODGE | DESOTO | CHRYSLER AND IMPERIAL | PER CAR | PART NUMBER |
|---|---|---|---|---|---|---|---|---|
| **11-01-0** | **MUFFLER** | | | | | | | |
| 11-01-1 | MUFFLER, PP1, PD3 | 6 | 60 | 60 | - | - | 1 | 2201 424 |
| | PP2, PD4, Single Exhaust | 8 | 60 | 60 | - | - | 1 | 2122 831 |
| | w/o High Performance or Ram Manifold, PP2, Dual Exhaust | 8 | 60 | - | - | - | 2 | 2201 424 |
| | w/o High Performance or Ram Manifold, PS1, PS3, Dual Exhaust | 8 | - | - | 60 | - | 2 | 2122 834 |
| | w/High Performance or Ram Manifold, PP2, PD1, PD1-D500, PD2, PD2-D500, PD4, PD4-D500, PS1, PS3, PC3-300, Dual Exhaust | 8 | 60 | 60 | 60 | 60 | 2 | 2122 831 |
| | PD1, PD2, PS1, PS3, PC1, PC2, Single Exhaust | 8 | - | 60 | 60 | 60 | 1 | 2122 833 |
| | Front, PC2, PC3, Dual Exhaust | 8 | - | - | - | 60 | 2 | 2122 835 |
| | Rear, PC2, PC3, Dual Exhaust | 8 | - | - | - | 60 | 2 | 2122 834 |
| | Front, PY1 except Cv. Cp., Dual Exhaust | 8 | - | - | - | 60 | 2 | ⊟2123 425 |
| | Rear, PY1 except Cv. Cp., Dual Exhaust | 8 | - | - | - | 60 | 2 | 1948 309 |
| | Front, PY1 Cv. Cp., Dual Exhaust | 8 | - | - | - | 60 | 2 | 2122 795 |
| | Rear, Right, PY1 Cv. Cp., Dual Exhaust | 8 | - | - | - | 60 | 1 | 1948 265 |
| | Rear, Left, PY1 Cv. Cp., Dual Exhaust | 8 | - | - | - | 60 | 1 | 1948 264 |
| **11-02-0** | **MUFFLER SUPPORT** | | | | | | | |
| 11-02-1 | CLAMP PACKAGE, Front Muffler Support, PC2, PC3, Dual Exhaust | 8 | - | - | - | 60 | 2 | 1321 109 |
| | Muffler Intermediate Pipe, PC2, PC3, PY1, Dual Exhaust | 8 | - | - | - | 60 | 4 | 1843 008 |
| 11-02-4 | SUPPORT, Front Muffler Intermediate Tail Pipe, Right, PC2, PC3 | 8 | - | - | - | 60 | 1 | 2122 796 |
| | Left, PC2, PC3 | 8 | - | - | - | 60 | 1 | 1948 549 |
| | PY1 except Cv. Cp. | 8 | - | - | - | 60 | 1 | 1945 709 |
| | Right, PY1 Cv. Cp. | 8 | - | - | - | 60 | 1 | 1820 319 |
| | Left, PY1 Cv. Cp. | 8 | - | - | - | 60 | 1 | 1820 318 |
| **11-05-0** | **EXHAUST PIPE** | | | | | | | |
| 11-05-1 | PIPE, 91" lgh., PP1, PD3, except Sub. | 6 | 60 | 60 | - | - | 1 | 2200 377 |
| | 95" lgh., PP1, PD3, Sub. | 6 | 60 | 60 | - | - | 1 | 2200 379 |
| | 23" lgh., PP2, PD4, LHD., Single Exhaust | 8 | 60 | 60 | - | - | 1 | 1943 901 |
| | Right, 88 1/2" lgh., PP2 except Sub., w/o High Performance or Ram Manifold, LHD., Dual Exhaust | 8 | 60 | - | - | - | 1 | 1948 176 |
| | Left, 81" lgh., PP2 except Sub., w/o High Performance or Ram Manifold, LHD., Dual Exhaust | 8 | 60 | - | - | - | 1 | 1948 174 |
| | Right, 92 1/2" lgh., PP2 Sub., w/o High Performance or Ram Manifold, LHD., Dual Exhaust | 8 | 60 | - | - | - | 1 | 1948 554 |
| | Left, 85" lgh., PP2 Sub., w/o High Performance or Ram Manifold, LHD., Dual Exhaust | 8 | 60 | - | - | - | 1 | 1948 552 |
| | Right, 18" lgh., w/High Performance, PP2, PD1, PD2, PD4, Dual Exhaust | 8 | 60 | 60 | - | - | 1 | 2122 790 |
| | Left, 25 3/4" lgh., w/High Performance, PP2, PD1, PD2, PD4, Dual Exhaust | 8 | 60 | 60 | - | - | 1 | 2122 788 |
| | Right, 17 7/8" lgh., PP2, PD1, PD2, PD4, PS1, PS3, w/Ram Manifold, LHD., Dual Exhaust | 8 | 60 | 60 | 60 | - | 1 | 2122 689 |
| | Left, 25 3/4" lgh., PP2, PD1, PD2, PD4, PS1, PS3, w/Ram Manifold, LHD., Dual Exhaust | 8 | 60 | 60 | 60 | - | 1 | 2122 677 |

★ Indicates use as required. Numerals in parentheses ( ) refer to notes. Printed in U.S.A.
⊟ Indicates parts not listed in any previous parts book. Prices and specifications subject to change without notice.
* Indicates change or addition.



MyMopar.com

## 11-05-0 EXHAUST PIPE - Cont'd

| CODE | PART NAME AND DESCRIPTION | NO. OF CYL. | PLYMOUTH | DODGE | DESOTO | CHRYSLER AND IMPERIAL | PER CAR | PART NUMBER |
|---|---|---|---|---|---|---|---|---|
| 11-05-1 | PIPE - Cont'd | | | | | | | |
| | Right, 10" lgh., By-Pass, PP2, PD1, PD2, PD4, PS1, PS3, w/Ram Manifold, LHD., Dual Exhaust | 8 | 60 | 60 | 60 | - | 1 | 2122 692 |
| | Left, 7 3/4" lgh., By-Pass, PP2, PD1, PD2, PD4, PS1, PS3, w/Ram Manifold, LHD., Dual Exhaust | 8 | 60 | 60 | 60 | - | 1 | 2122 681 |
| | 53 1/4" lgh., PD1, PD2, PS1, PS3, LHD., Single Exhaust | 8 | - | 60 | 60 | - | 1 | 2123 462 |
| | Right, 22 3/4" lgh., LHD., w/o Ram Manifold, Dual Exhaust | 8 | - | - | 60 | - | 1 | 2123 477 |
| | Left, 28 3/4" lgh., LHD., w/o Ram Manifold, Dual Exhaust | 8 | - | - | 60 | - | 1 | 2123 475 |
| | 53 1/4" lgh., PC1, PC2, Single Exhaust | 8 | - | - | - | 60 | 1 | 2123 472 |
| | Right, 22 1/2" lgh., PC2, PC3, Dual Exhaust | 8 | - | - | - | 60 | 1 | 2123 481 |
| | Left, 28 3/4" lgh., PC2, PC3, Dual Exhaust | 8 | - | - | - | 60 | 1 | 2123 479 |
| | Right, 18" lgh., PC3-300, w/Ram Manifold, Dual Exhaust | 8 | - | - | - | 60 | 1 | 2122 705 |
| | Left, 36" lgh., PC3-300, w/Ram Manifold, Dual Exhaust | 8 | - | - | - | 60 | 1 | 2122 696 |
| | Right, 18" lgh., By-Pass, PC3-300, w/Ram Manifold, Dual Exhaust | 8 | - | - | - | 60 | 1 | 2122 708 |
| | Left, 12" lgh., By-Pass, PC3-300, w/Ram Manifold, Dual Exhaust | 8 | - | - | - | 60 | 1 | 2122 702 |
| | Right, 7" lgh., PY1, Dual Exhaust | 8 | - | - | - | 60 | 1 | 1948 166 |
| | Left, 24 1/8" lgh., PY1, Dual Exhaust | 8 | - | - | - | 60 | 1 | 1948 164 |
| 11-05-4 | PIPE, Exhaust Extension, 66" lgh., PP2, PD4, except Sub., LHD., Single Exhaust | 8 | 60 | 60 | - | - | 1 | 1948 564 |
| | 70" lgh., PP2, PD4, Sub., LHD., Single Exhaust | 8 | 60 | 60 | - | - | 1 | 1948 565 |
| | Right, 66" lgh., w/High Performance or Ram Manifold, PP2, PD4, PD4-D500, except Sub., Dual Exhaust | 8 | 60 | 60 | - | - | 1 | 1948 564 |
| | Left, 64 1/2" lgh., w/High Performance or Ram Manifold, PP2, PD4, PD4-D500, except Sub., Dual Exhaust | 8 | 60 | 60 | - | - | 1 | 1948 568 |
| | Right, 70" lgh., w/High Performance or Ram Manifold, PP2, PD4, PD4-D500, Sub., Dual Exhaust | 8 | 60 | 60 | - | - | 1 | 1948 565 |
| | Left, 68 1/2" lgh., w/High Performance or Ram Manifold, PP2, PD4, PD4-D500, Sub., Dual Exhaust | 8 | 60 | 60 | - | - | 1 | 1948 569 |
| | 39" lgh., PD1, PD2, PD4, PC1, PC2, Single Exhaust | 8 | - | 60 | 60 | 60 | 1 | *2123 469 |
| | Right, 70" lgh., w/High Performance or Ram Manifold, PD1, PD1-D500, PD2, PD2-D500, PS1, PS3, PC3-300, LHD., Dual Exhaust | 8 | - | 60 | 60 | 60 | 1 | 1948 565 |
| | Left, 68 1/2" lgh., w/High Performance or Ram Manifold, PD1, PD1-D500, PD2, PD2-D500, PS1, PS3, PC3-300, LHD., Dual Exhaust | 8 | - | 60 | 60 | 60 | 1 | 1948 569 |
| | Right, 63 1/2" lgh., LHD., Dual Exhaust | 8 | - | - | 60 | - | 1 | 2123 486 |
| | Left, 63 1/2" lgh., LHD., Dual Exhaust | 8 | - | - | 60 | - | 1 | 2123 485 |
| | Right, 20 3/4" lgh., PC2, PC3, Dual Exhaust. | 8 | - | - | - | 60 | 1 | 2123 492 |
| | Left, 20 3/4" lgh., PC2, PC3, Dual Exhaust | 8 | - | - | - | 60 | 1 | 2123 491 |
| | Right, 37 1/2" lgh., PY1 except Cv. Cp., Dual Exhaust | 8 | - | - | - | 60 | 1 | 1948 171 |
| | Left, 26 5/8" lgh., PY1 except Cv. Cp., Dual Exhaust | 8 | - | - | - | 60 | 1 | 1948 170 |
| | Right, 38 1/8" lgh., PY1 Cv. Cp., Dual Exhaust | 8 | - | - | - | 60 | 1 | 1948 173 |
| | Left, 27 1/4" lgh., PY1 Cv. Cp., Dual Exhaust | 8 | - | - | - | 60 | 1 | 1948 172 |



MyMopar.com

| CODE | PART NAME AND DESCRIPTION | NO. OF CYL. | PLYMOUTH | DODGE | DESOTO | CHRYSLER AND IMPERIAL | PER CAR | PART NUMBER |
|---|---|---|---|---|---|---|---|---|
| **11-05-0** | **EXHAUST PIPE - Cont'd** | | | | | | | |
| 11-05-9 | PIPE, Exhaust Crossover, PP2, PD1, PD1-D500, PD2, PD2-D500, PD4, PD4-D500, PS1, PS3, PC3-300, LHD., w/Ram Manifold | 8 | 60 | 60 | 60 | 60 | 1 | 2122 680 |
| 11-05-12 | FLANGE, Exhaust Extension Pipe Ball Joint, PD1, PD2, PS1, PS3, PC1, PC2, Single Exhaust | 8 | - | 60 | 60 | 60 | 1 | 1946 639 |
| | Dual Exhaust | 8 | - | - | 60 | 60 | 2 | 1946 637 |
| **11-06-0** | **EXHAUST PIPE FLANGE GASKET AND STUD** | | | | | | | |
| 11-06-2 | BOLT, PP1, PD3 | 6 | 60 | 60 | - | - | 2 | 181 672 |
| | STUD, Left, PP2, PD4 | 8 | 60 | 60 | - | - | 2 | 1402 981 |
| | BOLT, Right, PP2, PD4 | 8 | 60 | 60 | - | - | 2 | 181 670 |
| | BOLT, PD1, PD2 | 8 | - | 60 | 60 | 60 | 4 | 181 670 |
| 11-06-3 | NUT, Exhaust Extension Pipe Ball Joint Flange, PD1, PD2, PS1, PS3, PC1, PC2, Single Exhaust | 8 | - | 60 | 60 | 60 | 2 | 1946 648 |
| | Dual Exhaust | 8 | - | - | 60 | 60 | 4 | 1946 648 |
| 11-06-8 | GASKET, PP1, PD3 | 6 | 60 | 60 | - | - | 1 | 2073 792 |
| | PP2, PD4, w/o High Performance or Ram Manifold | 8 | 60 | 60 | - | - | 2 | 1636 570 |
| | PP2, PD4, w/High Performance or Ram Manifold, LHD. | 8 | 60 | 60 | - | - | 2 | 1855 029 |
| | By-Pass Exhaust Pipe, PP2, PD1, PD2, PD4, PS1, PS3, PC3-300, w/Ram Manifold, LHD. | 8 | 60 | 60 | 60 | 60 | 2 | 1947 429 |
| | PD1, PD2, All | 8 | - | 60 | 60 | 60 | 2 | 1855 029 |
| **11-08-0** | **EXHAUST PIPE SUPPORT AND CLAMP** | | | | | | | |
| 11-08-1 | CLAMP PACKAGE, Exhaust Pipe, PP1, PD3 | 6 | 60 | 60 | - | - | 1 | 1843 008 |
| | PD2, PD4, Single Exhaust | 8 | 60 | 60 | - | - | 2 | 1603 364 |
| | PP2, PS1, PS3, w/o High Performance or Ram Manifold, PC2, PC3, Dual Exhaust | 8 | 60 | - | 60 | 60 | 2 | 1843 008 |
| | PP2, PD1, PD1-D500, PD2, PD2-D500, PD4, PD4-D500, PS1, PS3, PC3-300, LHD., w/High Performance or Ram Manifold, Dual Exhaust | 8 | 60 | 60 | 60 | 60 | 4 | 1603 364 |
| | CROSSOVER PIPE, w/Ram Manifold, PP2, PD1, PD1-D500, PD2, PD2-D500, PD4, PD4-D500, PS1, PS3, PC3-300, LHD. | 8 | 60 | 60 | 60 | 60 | 2 | 1843 009 |
| | PD1, PD2, PS1, PS3, PC1, PC2, Single Exhaust | 8 | - | 60 | 60 | 60 | 1 | 1843 407 |
| | PY1, Dual Exhaust | 8 | - | - | - | 60 | 2 | 1843 008 |
| 11-08-3 | BOLT, Exhaust Pipe Torque Converter Support, Single Exhaust, PD1, PD2, PD4, PC1, PC2 | 8 | - | 60 | 60 | 60 | 1 | *2123 496 |
| 11-08-4 | SUPPORT, Exhaust Pipe to Torque Converter, PD1, PD2, PD4, PS1, PS3, PC1, PC2, LHD., Single Exhaust | 8 | - | 60 | 60 | 60 | 1 | *2123 494 |
| 11-08-24 | CLAMP, Exhaust By-Pass Pipe, w/Ram Manifold, PP2, PD1, PD1-D500, PD2, PD2-D500, PD4, PD4-D500, PS1, PS3, PC3-300, LHD. | 8 | 60 | 60 | 60 | 60 | 2 | 2122 685 |
| | To Front Muffler Support, PY1 except Cv. Cp., Dual Exhaust | 8 | - | - | - | 60 | 2 | 1948 005 |
| **11-09-0** | **TAIL PIPE** | | | | | | | |
| 11-09-3 | PIPE, Tail, 55 1/2" lgh., PP1, PD3, except Sub. | 6 | 60 | 60 | - | - | 1 | 1948 592 |
| | 58" lgh., PP1, PD3, Sub. | 6 | 60 | 60 | - | - | 1 | 1948 588 |
| | 55 1/4" lgh., PP2, PD4, except Sub., LHD., Single Exhaust | 8 | 60 | 60 | - | - | 1 | 1948 539 |
| | 58" lgh., PP2, PD4, Sub., LHD., Single Exhaust | 8 | 60 | 60 | - | - | 1 | 1948 591 |


MyMopar.com

| CODE | PART NAME AND DESCRIPTION | NO. OF CYL. | PLYMOUTH | DODGE | DESOTO | CHRYSLER AND IMPERIAL | PER CAR | PART NUMBER |
|---|---|---|---|---|---|---|---|---|
| **11-09-0** | **TAIL PIPE - Cont'd** | | | | | | | |
| 11-09-3 | PIPE - Cont'd | | | | | | | |
| | Right, 55 1/2" lgh., w/o High Performance or Ram Manifold, PP2, PC3, except Sub., PS1, PS3, PC2, All, Dual Exhaust | 8 | 60 | - | 60 | 60 | 1 | 1948 593 |
| | Left, 55 1/2" lgh., w/o High Performance or Ram Manifold, PP2, PC3, except Sub., PS1, PS3, PC2, All, Dual Exhaust | 8 | 60 | - | 60 | 60 | 1 | 1948 592 |
| | Right, 58" lgh., w/o High Performance or Ram Manifold, PP2, PC3, Sub., Dual Exhaust. | 8 | 60 | - | - | 60 | 1 | 1948 589 |
| | Left, 58" lgh., w/o High Performance or Ram Manifold, PP2, PC3, Sub., Dual Exhaust. | 8 | 60 | - | - | 60 | 1 | 1948 588 |
| | Right, 55 1/4" lgh., w/High Performance or Ram Manifold, PP2, PD1, PD1-D500, PD2, PD2-D500, PD4, PD4-D500, PC3-300, except Sub., PS1, PS3, All, Dual Exhaust | 8 | 60 | 60 | 60 | 60 | 1 | 1948 539 |
| | Left, 55 1/4" lgh., w/High Performance or Ram Manifold, PP2, PD1, PD1-D500, PD2, PD2-D500, PD4, PD4-D500, PC3-300, except Sub., PS1, PS3, All, Dual Exhaust | 8 | 60 | 60 | 60 | 60 | 1 | 1948 538 |
| | Right, 58" lgh., w/High Performance or Ram Manifold, PP2, PD1, PD1-D500, PD2, PD2-D500, PD4, PD4-D500, Sub., Dual Exhaust | 8 | 60 | 60 | - | - | 1 | 1948 591 |
| | Left, 58" lgh., w/High Performance or Ram Manifold, PP2, PD1, PD1-D500, PD2, PD2-D500, PD4, PD4-D500, Sub., Dual Exhaust | 8 | 60 | 60 | - | - | 1 | 1948 590 |
| | 55 1/4" lgh., PD1, PD2, PC1, except Sub., PS1, PS3, PC2, All, Single Exhaust | 8 | - | 60 | 60 | 60 | 1 | 1948 538 |
| | 58" lgh., PD1, PD2, PC1, Sub., Single Exhaust | 8 | - | 60 | - | 60 | 1 | 1948 590 |
| | Right, 34 3/4" lgh., Rear Muffler Intermediate, PC2, PC3, Dual Exhaust | 8 | - | - | - | 60 | 1 | 1948 536 |
| | Left, 35" lgh., Rear Muffler Intermediate, PC2, PC3, Dual Exhaust | 8 | - | - | - | 60 | 1 | 1948 535 |
| | Right, 59 5/8" lgh., PY1, Dual Exhaust | 8 | - | - | - | 60 | 1 | 1948 284 |
| | Left, 61" lgh., PY1, Dual Exhaust | 8 | - | - | - | 60 | 1 | 1948 283 |
| | 26" lgh., Rear Muffler Intermediate, PY1 except Cv. Cp., Dual Exhaust | 8 | - | - | - | 60 | 2 | 2123 421 |
| | Right 31 7/8" lgh. Rear Muffler, Intermediate, PY1, Cv. Cp. | 8 | - | - | - | 60 | 1 | ⊟1948 267 |
| | Left 31 7/8" lgh. Rear Muffler, Intermediate, PY1, Cv. Cp. | 8 | - | - | - | 60 | 1 | ⊟1948 266 |
| **11-10-0** | **TAIL PIPE SUPPORT** | | | | | | | |
| 11-10-1 | CLAMP PACKAGE, Front, PP1, PD3 | 6 | 60 | 60 | - | - | 1 | 1843 009 |
| | Rear | 6 | 60 | 60 | - | - | 1 | 1843 408 |
| | Front, PP2, PD1, PD2, PD4, PS1, PS3, PC1, PC2, Single Exhaust | 8 | 60 | 60 | 60 | 60 | 1 | 1843 008 |
| | Rear, PP2, PD1, PD2, PD4, PS1, PS3, PC1, PC2, Single Exhaust | 8 | 60 | 60 | 60 | 60 | 1 | 1321 109 |
| | Front, w/o High Performance or Ram Manifold, PP2, PS1, PS3, PC2, PC3, Dual Exhaust | 8 | 60 | - | 60 | 60 | 2 | 1843 009 |
| | Rear, w/o High Performance or Ram Manifold, PP2, PS1, PS3, PC2, PC3, Dual Exhaust | 8 | 60 | - | 60 | 60 | 2 | 1843 408 |
| | Front, w/High Performance or Ram Manifold, PP2, PD1, PD1-D500, PD2, PD2-D500, PD4, PD4-D500, PS1, PS3, PC3-300, Dual Exhaust | 8 | 60 | 60 | 60 | 60 | 2 | 1843 008 |
| | Rear, w/High Performance or Ram Manifold, PP2, PD1, PD1-D500, PD2, PD2-D500, PD4, PD4-D500, PS1, PS3, PC3-300, Dual Exhaust | 8 | 60 | 60 | 60 | 60 | 2 | 1321 109 |
| | Front, PY1, Dual Exhaust | 8 | - | - | - | 60 | 2 | 1843 009 |
| | Rear, PY1, Dual Exhaust | 8 | - | - | - | 60 | 2 | 1843 408 |
| 11-10-3 | SUPPORT, w/INSULATOR, Front, PP1, PD3, except Sub. | 6 | 60 | 60 | - | - | 1 | 2123 433 |
| | Front, PP1, PD3, Sub. | 6 | 60 | 60 | - | - | 1 | 2123 438 |


MyMopar.com

| CODE | PART NAME AND DESCRIPTION | NO. OF CYL. | PLYMOUTH | DODGE | DESOTO | CHRYSLER AND IMPERIAL | PER CAR | PART NUMBER |
|---|---|---|---|---|---|---|---|---|
| **11-10-0** | **TAIL PIPE SUPPORT - Cont'd** | | | | | | | |
| 11-10-3 | SUPPORT, w/INSULATOR - Cont'd | | | | | | | |
| | Rear, PP1, PD3, except Sub. | 6 | 60 | 60 | - | - | 1 | 2123 442 |
| | Rear, PP1, PD3, Sub. | 6 | 60 | 60 | - | - | 1 | 2123 446 |
| | Rear, PP2, PD4, LHD., except Sub., Single Exhaust | 8 | 60 | 60 | - | - | 1 | 2123 443 |
| | Rear, PP2, PD4, LHD., Sub., Single Exhaust. | 8 | 60 | 60 | - | - | 1 | 2123 447 |
| | Front, PP2, PD4, except Sub., Single Exhaust | 8 | 60 | 60 | - | - | 1 | 2123 435 |
| | Front, PP2 Sub., w/o High Performance or Ram Manifold, Dual Exhaust | 8 | 60 | - | - | - | 2 | *2123 433 |
| | Rear, Right, PP2, PD1, PD2, PD4, PC3, Sub., Dual Exhaust | 8 | 60 | 60 | - | 60 | 1 | 2123 447 |
| | Rear, Left, PP2, PD1, PD2, PD4, PC3, Sub., Dual Exhaust | 8 | 60 | 60 | - | 60 | 1 | 2123 446 |
| | Front, PP2, PD4, except Sub., w/High Performance or Ram Manifold, Dual Exhaust | 8 | 60 | 60 | - | - | 2 | 2123 435 |
| | Front, PP2, PD4, Sub., PD1, PD2, PS1, PS3, PC1, PC2, All, Single Exhaust | 8 | 60 | 60 | 60 | 60 | 1 | 2123 440 |
| | Rear, Right, PP2, PD1, PD2, PD4, PC3, except Sub., PS1, PS3, PC2, All, Dual Exhaust | 8 | 60 | 60 | 60 | 60 | 1 | 2123 443 |
| | Rear, Left, PP2, PD1, PD2, PD4, PC3, except Sub., PS1, PS3, PC2, All, Dual Exhaust | 8 | 60 | 60 | 60 | 60 | 1 | 2123 442 |
| | Front, w/o High Performance or Ram Manifold, PP2 Sub., PS1, PS3, PC2, PC3, All, Dual Exhaust | 8 | 60 | - | 60 | 60 | 2 | 2123 438 |
| | Front, w/High Performance or Ram Manifold, PP2, PD4, Sub., PD1, PD1-D500, PD2, PD2-D500, PD4-D500, PS1, PS3, PC3-300, All, Dual Exhaust | 8 | 60 | 60 | 60 | 60 | 2 | 2123 440 |
| | Rear, PD1, PD2, PC1, except Sub., PS1, PS3, PC2, All, Single Exhaust | 8 | - | 60 | 60 | 60 | 1 | 2123 442 |
| | Rear, PD1, PD2, PC1, Sub., Single Exhaust | 8 | - | 60 | - | 60 | 1 | 2123 446 |
| | To Rear Muffler, PY1, All, Dual Exhaust | 8 | - | - | - | 60 | 2 | 2123 456 |
| | Rear, Tail Pipe, PY1, All, Dual Exhaust | 8 | - | - | - | 60 | 2 | ⊟2123 401 |
| 11-10-18 | NUT, Tail Pipe Rear Support to Body, except Sub. | 6-8 | 60 | 60 | 60 | 60 | ★ | 6012 065 |
| 11-10-26 | WASHER | 6-8 | 60 | 60 | 60 | 60 | ★ | 688 900 |
| 11-10-42 | BRACKET, Tail Pipe, Front Support, Right, PY1, All, Dual Exhaust | 8 | - | - | - | 60 | 1 | 2123 396 |
| | Left, PY1, All, Dual Exhaust | 8 | - | - | - | 60 | 1 | 2123 395 |

**NOTES**

★ Indicates use as required. Numerals in parentheses ( ) refer to notes. Printed in U.S.A.
⊟ Indicates parts not listed in any previous parts book. Prices and specifications subject to change without notice.
* Indicates change or addition.


MyMopar.com
Dec. 30, 1959 Supersedes Oct. 1, 1959.

| CODE | PART NAME AND DESCRIPTION | NO. OF CYL. | PLYMOUTH | DODGE | DESOTO | CHRYSLER AND IMPERIAL | PER CAR | PART NUMBER |
|---|---|---|---|---|---|---|---|---|

## NOTES



MyMopar.com

# GROUP 12 - FENDERS AND SHEET METAL

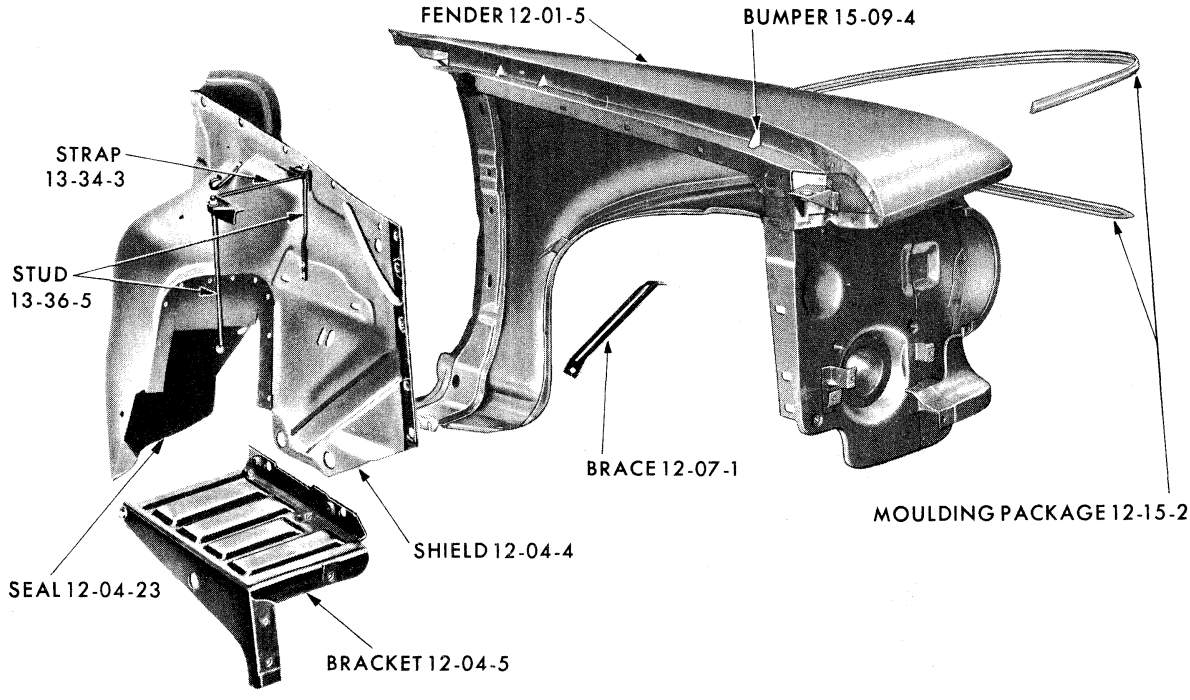


FRONT FENDER - PLYMOUTH PP1-2

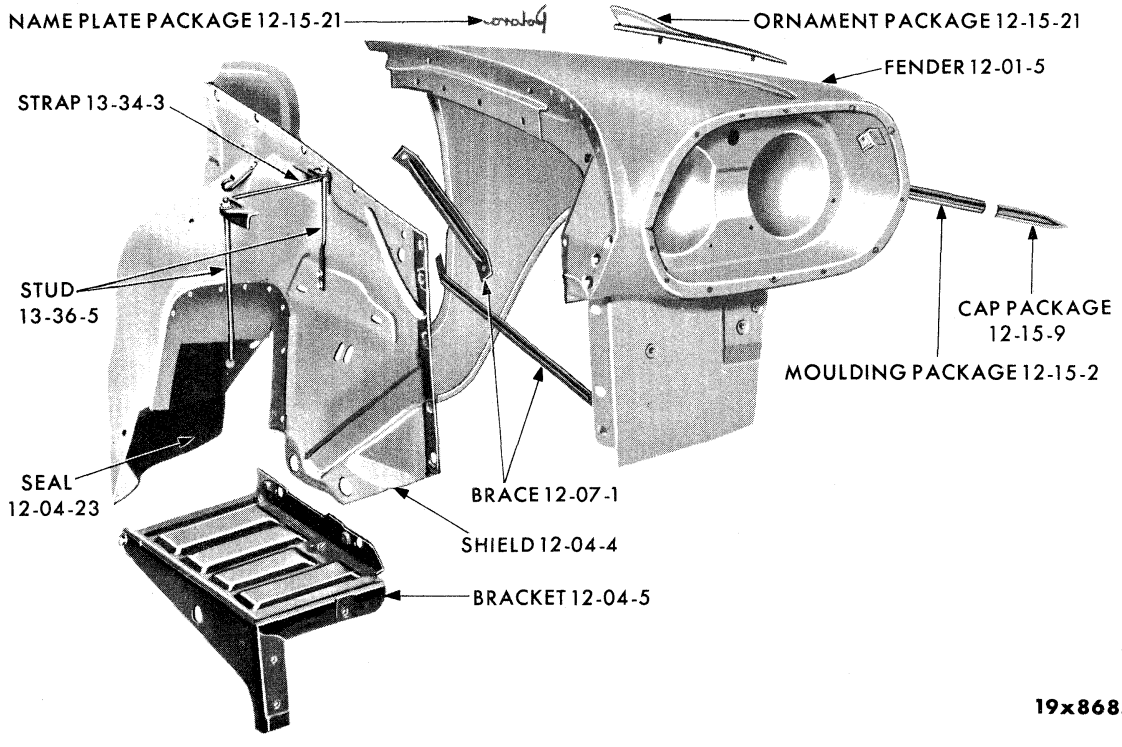


FRONT FENDER - DODGE PD1-2-3-4



MyMopar.com

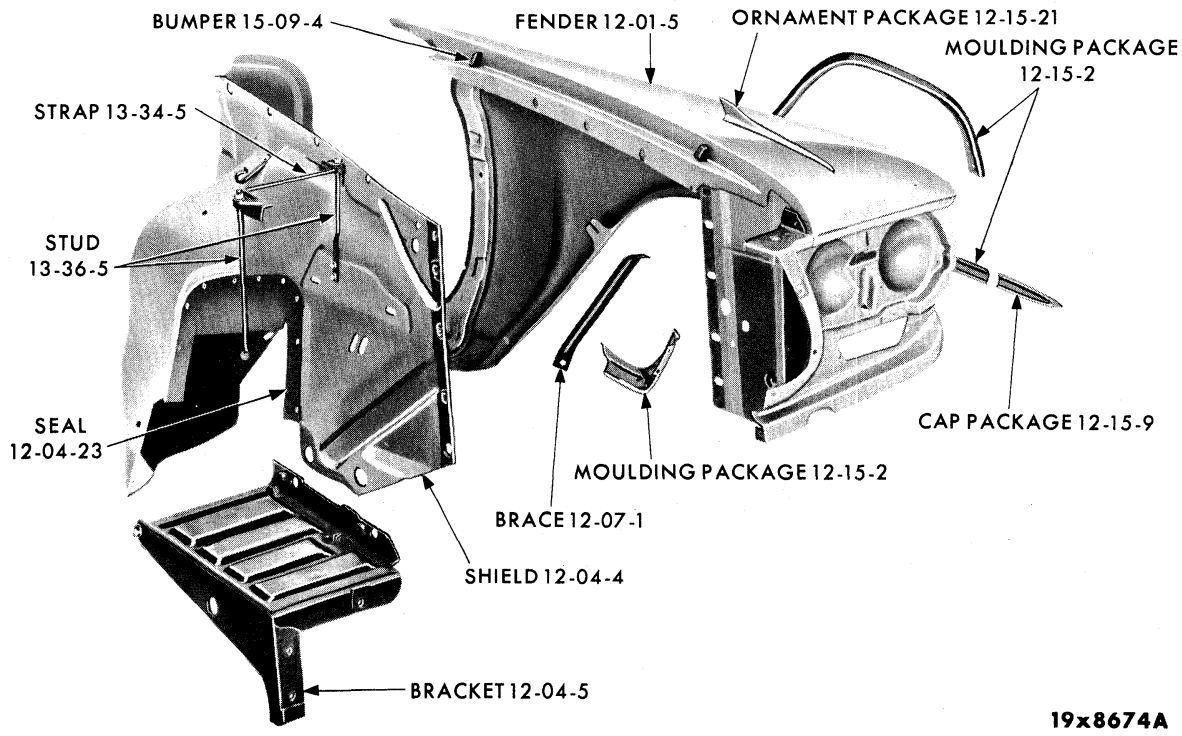


FRONT FENDER - DESOTO PS1-3

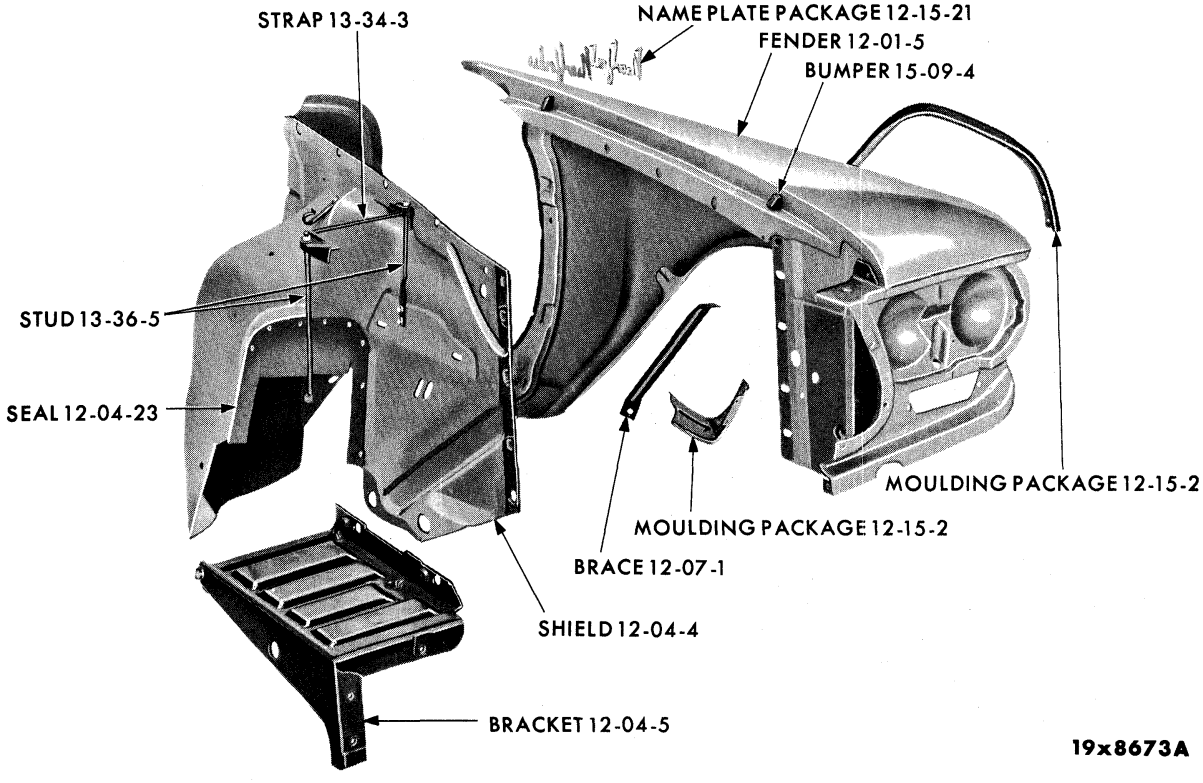


FRONT FENDER - CHRYSLER PC1-2-3



MyMopar.com

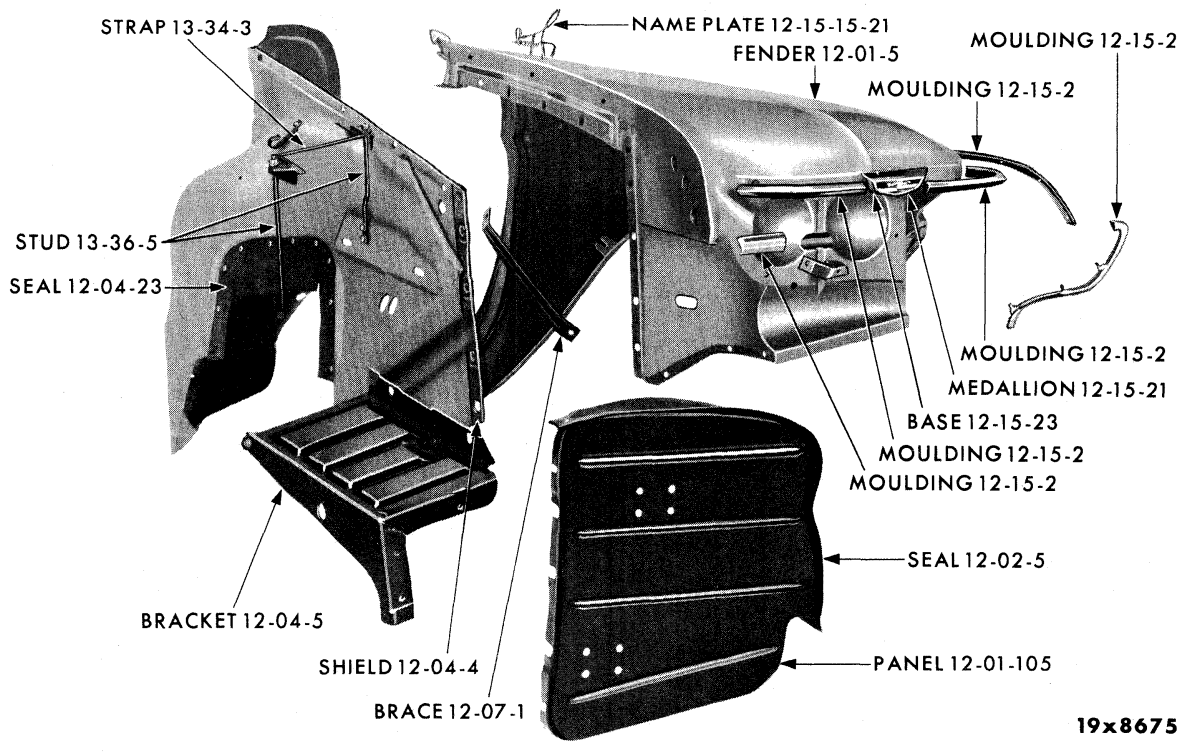


FRONT FENDER - IMPERIAL PY1

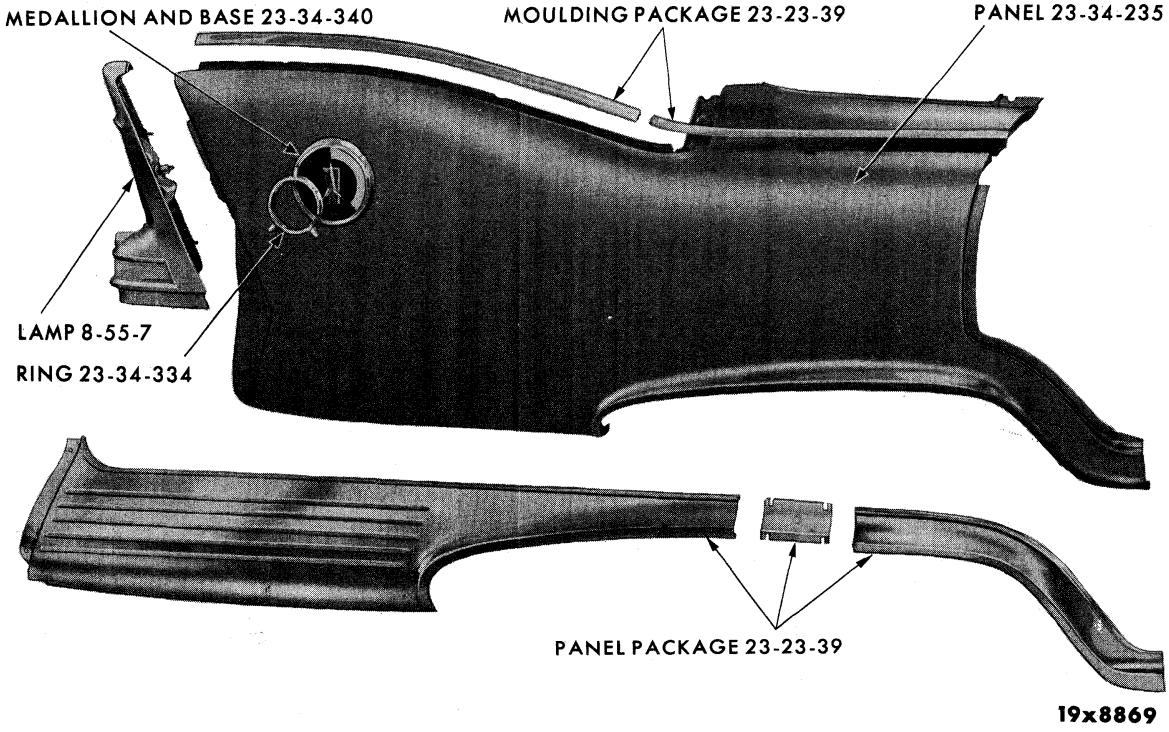


REAR QUARTER PANEL AND MOULDINGS - PLYMOUTH PP1-2


MyMopar.com

| CODE | PART NAME AND DESCRIPTION | NO. OF CYL. | PLYMOUTH | DODGE | DESOTO | CHRYSLER AND IMPERIAL | PER CAR | PART NUMBER |
|---|---|---|---|---|---|---|---|---|

## NOTES



MyMopar.com

# GROUP 12 - FENDERS AND SHEET METAL

## 12-01-0 FRONT FENDERS

| CODE | PART NAME AND DESCRIPTION | NO. OF CYL. | PLYMOUTH | DODGE | DESOTO | CHRYSLER AND IMPERIAL | PER CAR | PART NUMBER |
|---|---|---|---|---|---|---|---|---|
| 12-01-5 | FENDER, Right | 6-8 | 60 | - | - | - | 1 | 1863 248 |
| | Left | 6-8 | 60 | - | - | - | 1 | 1863 249 |
| | Right | 6-8 | - | 60 | - | - | 1 | 1903 972 |
| | Left | 6-8 | - | 60 | - | - | 1 | 1903 973 |
| | Right | 8 | - | - | 60 | - | 1 | 1863 428 |
| | Left | 8 | - | - | 60 | - | 1 | 1863 429 |
| | Right, PC1 | 8 | - | - | - | 60 | 1 | 1863 630 |
| | Left, PC1 | 8 | - | - | - | 60 | 1 | 1863 631 |
| | Right, PC2, PC3 | 8 | - | - | - | 60 | 1 | 1903 852 |
| | Left, PC2, PC3 | 8 | - | - | - | 60 | 1 | 1903 853 |
| | Right, PY1 | 8 | - | - | - | 60 | 1 | 1903 424 |
| | Left, PY1 | 8 | - | - | - | 60 | 1 | 1903 425 |
| 12-01-9 | PANEL, Headlamp, Right | 6-8 | 60 | - | - | - | 1 | 1863 838 |
| | Left | 6-8 | 60 | - | - | - | 1 | 1863 839 |
| 12-01-12 | SCREW, Shear Panel to Yoke, w/WASHER, PY1 | 8 | - | - | - | 60 | 6 | 1863 815 |
| | To Side Shield | 6-8 | 60 | - | 60 | 60 | 10 | 1863 815 |
| | To Radiator Yoke | 6-8 | - | 60 | 60 | 60 | 10 | 1863 815 |
| | To Sill Bracket, PY1 | 8 | - | - | - | 60 | 4 | 1863 612 |
| | To Cowl, Upper, PY1 | 8 | - | - | - | 60 | 2 | 1343 212 |
| | STUD, to Cowl Upper Front | 6-8 | 60 | 60 | 60 | 60 | 4 | 1863 716 |
| | To Cowl Upper Rear | 6-8 | 60 | 60 | 60 | 60 | 2 | 6010 036 |
| | Lower Rear | 6-8 | 60 | 60 | 60 | 60 | 4 | 1863 019 |
| | To Pillar Upper Rear | 6-8 | 60 | - | - | - | 2 | 1863 586 |
| | To Yoke | 6-8 | - | 60 | 60 | 60 | 2 | 1903 396 |
| | To Sill, PC1, PC2, PC3 | 6-8 | 60 | 60 | 60 | 60 | 4 | ⊟6022 016 |
| 12-01-16 | WASHER, to Pillar | 6-8 | 60 | - | - | - | 4 | 1903 513 |
| | | 6-8 | 60 | - | - | - | 2 | 1903 478 |
| | To Cowl Lower Rear | 6-8 | - | 60 | 60 | 60 | 4 | 1832 147 |
| | | 6-8 | - | 60 | 60 | 60 | ★ | 6010 038 |
| | Support to Sill, PY1 | 8 | - | - | - | 60 | 2 | 1903 513 |
| | To Sill | 6-8 | 60 | 60 | 60 | 60 | 4 | 1903 513 |
| | To Yoke | 6-8 | 60 | 60 | 60 | 60 | 2 | 1903 397 |
| 12-01-105 | PANEL, Shear, Right, PY1 | 8 | - | - | - | 60 | 1 | 1903 010 |
| | Left, PY1 | 8 | - | - | - | 60 | 1 | 1903 011 |

## 12-02-0 FRONT FENDER LINER

| | | | | | | | | |
|---|---|---|---|---|---|---|---|---|
| 12-02-5 | SHIM, to Cowl | 6-8 | 60 | 60 | 60 | 60 | ★ | 1863 926 |
| | To Pillar Upper, Thin | 6-8 | 60 | - | - | - | ★ | 6010 035 |
| | Lower, Thin | 6-8 | 60 | - | - | - | ★ | 6010 031 |
| | To Cowl, Upper Front | 6-8 | 60 | 60 | 60 | 60 | ★ | 6010 037 |
| | Upper Rear | 6-8 | 60 | 60 | 60 | 60 | ★ | 6010 035 |
| | Lower Rear | 6-8 | 60 | 60 | 60 | 60 | ★ | 6010 031 |
| | To Pillar, PY1 | 8 | - | - | - | 60 | 2 | 1810 073 |
| | To Pillar | 6-8 | 60 | 60 | 60 | 60 | 2 | *2165 872 |

## 12-04-0 FRONT FENDER SHIELD OR PLATE

| | | | | | | | | |
|---|---|---|---|---|---|---|---|---|
| 12-04-4 | SHIELD, Right | 6-8 | 60 | - | - | - | 1 | 1940 904 |
| | Left | 6-8 | 60 | - | - | - | 1 | 1940 905 |
| | Right, Ram Manifold | 8 | 60 | - | - | - | 1 | 1940 904 |
| | Left | 8 | 60 | - | - | - | 1 | 1940 905 |
| | Right, PC1 | 6-8 | - | 60 | 60 | 60 | 1 | 1948 420 |
| | Left, PC1 | 6-8 | - | 60 | 60 | 60 | 1 | 1948 421 |
| | Right, PC2, PC3, PY1 | 8 | - | - | - | 60 | 1 | 1948 440 |
| | Left, PC2, PC3, PY1 | 8 | - | - | - | 60 | 1 | 1948 441 |
| 12-04-5 | BRACKET, Upper Support | 6-8 | 60 | 60 | 60 | 60 | 1 | 1940 892 |
| 12-04-6 | SCREW, Shield to Upper Support, w/WASHER | 8 | - | - | - | 60 | 3 | 6012 077 |
| 12-04-12 | SCREW, Bracket to Pillar Support, w/WASHER | 6-8 | 60 | 60 | - | - | 2 | 6010 017 |
| | Bracket to Cowl | 6-8 | 60 | - | - | - | 2 | 6010 105 |
| | To Pillar Support | 6-8 | 60 | 60 | 60 | 60 | 2 | 1863 056 |
| | To Pillar Bracket | 6-8 | 60 | 60 | 60 | 60 | 2 | 1863 057 |

★ Indicates use as required. Numerals in parentheses ( ) refer to notes. Printed in U.S.A.
⊟ Indicates parts not listed in any previous parts book. Prices and specifications subject to change without notice.
* Indicates change or addition.



MyMopar.com

| CODE | PART NAME AND DESCRIPTION | NO. OF CYL. | PLYMOUTH | DODGE | DESOTO | CHRYSLER AND IMPERIAL | PER CAR | PART NUMBER |
|---|---|---|---|---|---|---|---|---|
| **12-04-0** | **FRONT FENDER SHIELD OR PLATE - Cont'd** | | | | | | | |
| 12-04-12 | SCREW - Cont'd | | | | | | | |
| | To Cowl | 8 | - | - | 60 | 60 | 2 | 6010 017 |
| | To Cowl Upper, PY1 | 8 | - | - | - | 60 | 2 | 1863 612 |
| | To Sill Bracket, PY1 | 8 | - | - | - | 60 | 4 | 1863 612 |
| | To Radiator Yoke | 8 | - | - | 60 | 60 | 2 | 1863 815 |
| | Shield to Fender | 6-8 | 60 | 60 | 60 | 60 | 8 | 6012 087 |
| | Shield to Frame | 6-8 | 60 | 60 | 60 | 60 | 6 | 6012 080 |
| | Brace to Fender | 6-8 | - | 60 | 60 | 60 | 2 | 6000 160 |
| | Shield to Sill | 6-8 | - | 60 | 60 | 60 | 2 | 1739 049 |
| | Shield Brace to Dash Brace | 8 | - | 60 | 60 | 60 | 2 | 6012 068 |
| | Upper Support Bracket | 6-8 | 60 | 60 | 60 | 60 | 5 | 6012 068 |
| | Cover to Shield | 8 | 60 | 60 | 60 | 60 | 8 | 6012 068 |
| | STUD, to Cowl Bracket | 6-8 | 60 | 60 | 60 | 60 | 4 | 1863 019 |
| | Support to Sill, PY1 | 8 | - | - | - | 60 | 2 | 1863 019 |
| 12-04-22 | COVER, Shield, Right | 8 | 60 | 60 | 60 | - | 1 | 1948 434 |
| | Left | 8 | 60 | 60 | 60 | - | 1 | 1948 435 |
| 12-04-23 | SEAL, to Upper Control Arm | 6 | 60 | 60 | - | - | 1 | 2123 337 |
| | PS1, PC1, PY1 | 8 | 60 | 60 | 60 | 60 | 2 | 1940 889 |
| | PS3, PC2, PC3 | 8 | - | - | 60 | 60 | 2 | 1851 024 |
| | Shield Cover | 8 | 60 | 60 | 60 | - | 2 | 1940 889 |
| | Shield to Fender, PY1 | 8 | - | - | - | 60 | 2 | 1940 859 |
| 12-04-26 | "J" NUT, Shield to Fender | 6-8 | 60 | 60 | 60 | 60 | 10 | 6012 065 |
| | Cover to Shield | 6-8 | 60 | 60 | 60 | 60 | 13 | 6012 065 |
| 12-04-33 | BRACKET, Shield to Fender, Right | 6-8 | 60 | - | - | - | 1 | 1948 408 |
| | Left | 6-8 | 60 | - | - | - | 1 | 1948 409 |
| | To Pillar | 6-8 | - | 60 | - | - | 2 | 1686 914 |
| | To Side Sill, Right | 8 | - | - | 60 | 60 | 1 | 1948 402 |
| | Left | 8 | - | - | 60 | 60 | 1 | 1948 403 |
| **12-06-0** | **FRONT FENDER BRACKET** | | | | | | | |
| 12-06-3 | BRACKET, to Sill, PY1 | 8 | - | - | - | 60 | 2 | 1624 582 |
| | To Hood Hinge Plate, Right, PY1 | 8 | - | - | - | 60 | 1 | 1903 884 |
| | Left, PY1 | 8 | - | - | - | 60 | 1 | 1903 885 |
| **12-07-0** | **FRONT FENDER SIDE SHIELD BRACE** | | | | | | | |
| 12-07-1 | BRACE, to Fender Shield, Right, PS1, PC1 | 6-8 | - | 60 | 60 | 60 | 1 | 1948 414 |
| | Left, PS1, PC1 | 6-8 | - | 60 | 60 | 60 | 1 | 1948 415 |
| | Right, PS3, PC2, PC3 | 8 | - | - | 60 | 60 | 1 | 1940 894 |
| | Left, PS3, PC2, PC3 | 8 | - | - | 60 | 60 | 1 | 1940 895 |
| | To Extension, Right | 8 | 60 | 60 | - | - | 1 | 1903 688 |
| | Left | 8 | 60 | 60 | - | - | 1 | 1903 689 |
| | To Cowl, Right, PY1 | 8 | - | - | - | 60 | 1 | 1754 294 |
| | Left, PY1 | 8 | - | - | - | 60 | 1 | 1754 295 |
| | To Headlamp Plate, Right | 8 | - | - | 60 | 60 | 1 | 1903 948 |
| | Left | 8 | - | - | 60 | 60 | 1 | 1903 949 |
| 12-07-3 | SCREW, Brace to Fender, w/WASHER | 6-8 | - | 60 | 60 | 60 | 2 | 6012 078 |
| **12-15-0** | **FRONT FENDER MOULDING AND NAME PLATE PACKAGES** | | | | | | | |
| 12-15-2 | MOULDING PACKAGE, Side, Right, PP1-M, PP2-M, PP1-H, PP2-H | 6-8 | 60 | - | - | - | 1 | 2196 170 |
| | Left, PP1-M, PP2-M, PP1-H, PP2-H | 6-8 | 60 | - | - | - | 1 | 2196 171 |
| | CLIP | | | | | | 2 | 6010 219 |
| | CLIP | | | | | | 10 | 6010 210 |
| | CLIP | | | | | | 2 | 6010 029 |
| | NUT | | | | | | 2 | 151 497 |
| | Wheel Opening, Right, PP1-L, PP2-L, PP1-M, PP2-M | 6-8 | 60 | - | - | - | 1 | *2196 162 |
| | Left, PP1-L, PP2-L, PP1-M, PP2-M | 6-8 | 60 | - | - | - | 1 | *2196 163 |
| | Right, PP1-H, PP2-H | 6-8 | 60 | - | - | - | 1 | *2196 164 |
| | Left, PP1-H, PP2-H | 6-8 | 60 | - | - | - | 1 | *2196 165 |
| | CLIP | | | | | | 12 | *6010 216 |
| | CLIP | | | | | | 2 | *6010 218 |
| | NUT | | | | | | 12 | * 151 497 |
| | Wheel Opening to Sill, Right, PP1-H, PP2-H | 6-8 | 60 | - | - | - | 1 | 2196 172 |



MyMopar.com

## 12-15-0 FRONT FENDER MOULDING AND NAME PLATE PACKAGES - Cont'd

| CODE | PART NAME AND DESCRIPTION | NO. OF CYL. | PLYMOUTH | DODGE | DESOTO | CHRYSLER AND IMPERIAL | PER CAR | PART NUMBER |
|---|---|---|---|---|---|---|---|---|
| 12-15-2 | MOULDING PACKAGE - Cont'd | | | | | | | |
| | Left, PP1-H, PP2-H | 6-8 | 60 | - | - | - | 1 | 2196 173 |
| | CLIP | | | | | | 2 | 6000 732 |
| | Wheel Opening to Cover, Right | 6-8 | 60 | - | - | - | 1 | 2196 166 |
| | Left | 6-8 | 60 | - | - | - | 1 | 2196 167 |
| | COVER PACKAGE, Wheel Opening, Right | 6-8 | 60 | - | - | - | 1 | 2196 174 |
| | Left | 6-8 | 60 | - | - | - | 1 | 2196 175 |
| | CLIP | | | | | | 10 | 6010 227 |
| | SCREW | | | | | | 6 | 128 151 |
| | SCREW | | | | | | 2 | 180 020 |
| | Front to Wheel Opening, Right | 6-8 | 60 | - | - | - | 1 | 2196 470 |
| | Left | 6-8 | 60 | - | - | - | 1 | 2196 471 |
| | CLIP | | | | | | 6 | 6010 217 |
| | NUT | | | | | | 8 | 151 497 |
| | Side Rear, Right, PD1, PD2, UP TO | 8 | - | 60 (1) | - | - | 1 | *2196 426 |
| | Left, PD1, PD2, UP TO | 8 | - | 60 (1) | - | - | 1 | *2196 427 |
| | Side, Right, PD1, AFTER | 8 | - | 60 | - | - | 1 | ⊟2196 884 |
| | Left, PD1, AFTER | 8 | - | 60 | - | - | 1 | ⊟2196 885 |
| | CLIP | | - | - | - | - | 8 | *6000 710 |
| | CLIP | | - | - | - | - | 2 | 6006 429 |
| | CLIP | | - | - | - | - | 2 | *6013 066 |
| | NUT | | - | - | - | - | 2 | * 446 059 |
| | CLIP | | | | | | 8 | 6000 710 |
| | CLIP | | | | | | 2 | 6006 429 |
| | Side, Right, PD3, PD4 | 6-8 | - | 60 | - | - | 1 | *2196 424 |
| | Left, PD3, PD4 | 6-8 | - | 60 | - | - | 1 | *2196 425 |
| | CLIP | | | | | | 4 | 6010 215 |
| | Side, Right | 8 | - | - | 60 | - | 1 | 2196 507 |
| | Left | 8 | - | - | 60 | - | 1 | 2196 508 |
| | CLIP | | | | | | 12 | 6006 516 |
| | Side, PC1 | 8 | - | - | - | 60 | 2 | 2196 552 |
| | CLIP | | | | | | 2 | 6010 215 |
| | CLIP | | | | | | 2 | 6006 429 |
| | Upper, Right, PC1 | 8 | - | - | - | 60 | 1 | 2196 567 |
| | Left, PC1 | 8 | - | - | - | 60 | 1 | 2196 568 |
| | CLIP | | | | | | 2 | 6006 470 |
| | Lower, PC1 | 8 | - | - | - | 60 | 2 | 2196 563 |
| | CLIP | | | | | | 2 | 6006 429 |
| | Side, PC2 | 8 | - | - | - | 60 | 2 | 2196 554 |
| | CLIP | | - | - | - | - | 2 | ⊟6000 911 |
| | CLIP | | | | | | 4 | 6006 429 |
| | Upper Right, PC2 | 8 | - | - | - | 60 | 1 | 2196 565 |
| | Left, PC2 | 8 | - | - | - | 60 | 1 | 2196 566 |
| | CLIP | | | | | | 4 | 6006 470 |
| | Lower, PC2 | 8 | - | - | - | 60 | 2 | 2196 561 |
| | CLIP | | | | | | 4 | 6006 429 |
| | Wheel Opening, Right, PS3, PC3 | 8 | - | - | 60 | 60 | 1 | 2196 501 |
| | Left, PS3, PC3 | 8 | - | - | 60 | 60 | 1 | 2196 502 |
| | SCREW | | | | | | 12 | 125 978 |
| | To Sill, Right, PS3, PC3 | 8 | - | - | 60 | 60 | 1 | 2196 503 |
| | Left, PS3, PC3 | 8 | - | - | 60 | 60 | 1 | 2196 504 |
| | CLIP | | | | | | 2 | 6000 732 |
| | NUT | | | | | | 2 | 120 375 |
| | SCREW | | | | | | 2 | 125 978 |
| | Side, Right, PY1 | 8 | - | - | - | 60 | 1 | 2196 712 |
| | Left, PY1 | 8 | - | - | - | 60 | 1 | 2196 713 |
| | CLIP | | | | | | 12 | 6010 093 |
| | Front, Upper Inner, Right, PY1 | 8 | - | - | - | 60 | 1 | 2196 714 |
| | Left, PY1 | 8 | - | - | - | 60 | 1 | 2196 715 |
| | Front, Upper Outer, Right, PY1 | 8 | - | - | - | 60 | 1 | 2196 726 |
| | Left, PY1 | 8 | - | - | - | 60 | 1 | 2196 727 |
| | Hood Extension, Inner, Right, PY1 | 8 | - | - | - | 60 | 1 | 2196 710 |
| | Left, PY1 | 8 | - | - | - | 60 | 1 | 2196 711 |
| | Outer, Right, PY1 | 8 | - | - | - | 60 | 1 | 2196 729 |
| | Left, PY1 | 8 | - | - | - | 60 | 1 | 2196 736 |

NOTE 1: PD1 Serial No. 113308 L.A. Blt.

★ Indicates use as required. Numerals in parentheses ( ) refer to notes. Printed in U.S.A.
⊟ Indicates parts not listed in any previous parts book. Prices and specifications subject to change without notice.
* Indicates change or addition.



MyMopar.com

## 12-15-0 FRONT FENDER MOULDING AND NAME PLATE PACKAGES - Cont'd

| CODE | PART NAME AND DESCRIPTION | NO. OF CYL. | PLYMOUTH | DODGE | DESOTO | CHRYSLER AND IMPERIAL | PER CAR | PART NUMBER |
|---|---|---|---|---|---|---|---|---|
| 12-15-2 | MOULDING PACKAGE - Cont'd | | | | | | | |
| | Wheel Opening, Right, PY1 | 8 | - | - | - | 60 | 1 | 2196 737 |
| | Left, PY1 | 8 | - | - | - | 60 | 1 | 2196 738 |
| | SCREW | | | | | | 16 | 9413 197 |
| 12-15-8 | CLIP, Side, Moulding | 6-8 | 60 | - | - | - | 10 | 6010 210 |
| | Upper | 6-8 | 60 | - | - | - | 6 | 6010 192 |
| | Side, Front | 6-8 | 60 | - | - | - | 2 | 6010 029 |
| | Rear | 6-8 | 60 | - | - | - | 2 | 6010 219 |
| | Wheel Opening | 6-8 | 60 | - | - | - | 12 | 6010 216 |
| | COVER, Wheel Opening | 6-8 | 60 | - | - | - | 10 | 6010 227 |
| | Front to Wheel Opening | 6-8 | 60 | - | - | - | 6 | 6010 217 |
| | Wheel Opening Extension | 6-8 | 60 | - | - | - | 4 | 6010 216 |
| | | 6-8 | 60 | - | - | - | 2 | 6010 218 |
| | RETAINER, Wheel Opening | 6-8 | 60 | - | - | - | 2 | 1903 274 |
| | Front, Left | 6-8 | 60 | - | - | - | 1 | 1903 275 |
| | Rear, PD1, PD2 | 8 | - | 60 | - | - | 10 | 6000 710 |
| | PD1, PD2 | 8 | - | 60 | - | - | 2 | 6006 429 |
| | PD3-M, PD4-M, PD3-H, PD4-H | 6-8 | - | 60 | - | - | 4 | 6010 215 |
| | Side | 8 | - | - | 60 | - | 12 | 6006 516 |
| | Cap | 8 | - | - | 60 | - | 2 | 6013 066 |
| | Side, PC1, PC2 | 8 | - | - | - | 60 | 2 | 6000 911 |
| | PC1, PC2 | 8 | - | - | - | 60 | ★ | 6006 429 |
| | Upper, PC1, PC2 | 8 | - | - | - | 60 | ★ | 6000 931 |
| | Lower, PC1, PC2 | 8 | - | - | - | 60 | ★ | 6006 429 |
| | To Sill, PC3 | 8 | - | - | - | 60 | 2 | 6000 732 |
| | Cap, PC1, PC2 | 8 | - | - | - | 60 | 2 | 6010 215 |
| | | 8 | - | - | - | 60 | 2 | 6000 442 |
| | | 8 | - | - | - | 60 | 4 | ⊟6000 756 |
| | Side, Rear, PY1 | 8 | - | - | - | 60 | 6 | 6006 448 |
| | Shear Panel, PY1 | 8 | - | - | - | 60 | 2 | 6006 130 |
| | Side, PY1 | 8 | - | - | - | 60 | 12 | 6010 093 |
| 12-15-9 | CAP PACKAGE, Side Moulding, PD1, PD2, | | | | | | | |
| | UP TO | 8 | - | 60 (1) | - | - | 2 | *2196 428 |
| | NUT | | | | | | 2 | 446 059 |
| | Right | 8 | - | - | 60 | - | 1 | 2196 505 |
| | Left | 8 | - | - | 60 | - | 1 | 2196 506 |
| | CLIP | | | | | | 2 | 6013 066 |
| | NUT | | | | | | 2 | 446 059 |
| | Right, PC1, PC2 | 8 | - | - | - | 60 | 1 | 2196 559 |
| | Left, PC1, PC2 | 8 | - | - | - | 60 | 1 | 2196 560 |
| | CLIP | | | | | | 2 | 6010 215 |
| | CLIP | | | | | | 2 | 6000 442 |
| | CLIP | | | | | | 2 | ⊟6000 756 |
| 12-15-12 | STUD, Inner Moulding, PY1 | 8 | - | - | - | 60 | 4 | 6010 023 |
| | Upper Outer, PY1 | 8 | - | - | - | 60 | 2 | 6010 023 |
| | Inner, PY1 | 8 | - | - | - | 60 | 2 | 6010 023 |
| 12-15-21 | NAME PLATE PACKAGE, Front Fender | | | | | | | |
| | Side, Belvedere, Right | 6-8 | 60 | - | - | - | 1 | 2196 150 |
| | Left | 6-8 | 60 | - | - | - | 1 | 2196 151 |
| | CLIP | | | | | | 10 | 6000 049 |
| | Fury, Right, PP1-H, PP2-H | 6-8 | 60 | - | - | - | 1 | 2196 160 |
| | Left, PP1-H, PP2-H | 6-8 | 60 | - | - | - | 1 | 2196 161 |
| | CLIP | | | | | | 14 | 6000 049 |
| | Sonoramic Commando Power | 8 | 60 | - | - | - | 2 | 2196 256 |
| | CLIP | | | | | | 10 | 6000 050 |
| | Golden Commando Power | 8 | 60 | - | - | - | 2 | 2196 836 |
| | CLIP | | | | | | 6 | 6000 050 |
| | Matador, PD1 | 8 | - | 60 | - | - | 2 | 2196 423 |
| | NUT | | | | | | 8 | 6010 128 |
| | Polara, PD2 | 8 | - | 60 | - | - | 2 | 2196 422 |
| | NUT | | | | | | 8 | 6010 128 |
| | Adventurer | 8 | - | - | 60 | - | 2 | 2196 840 |
| | NUT | | | | | | 8 | 6000 490 |

NOTE 1: PD1 Serial No. 113308 L. A. Blt.



MyMopar.com

## 12-15-0 FRONT FENDER MOULDING AND NAME PLATE PACKAGES - Cont'd

| CODE | PART NAME AND DESCRIPTION | NO. OF CYL. | PLYMOUTH | DODGE | DESOTO | CHRYSLER AND IMPERIAL | PER CAR | PART NUMBER |
|---|---|---|---|---|---|---|---|---|
| 12-15-21 | NAME PLATE PACKAGE - Cont'd | | | | | | | |
| | Chrysler, PC1 | 8 | - | - | - | 60 | 2 | 2196 557 |
| | CLIP | | | | | | 8 | 6000 020 |
| | Saratoga, PC2 | 8 | - | - | - | 60 | 2 | 2196 551 |
| | CLIP | | | | | | 12 | 6000 020 |
| | New Yorker, PC3 | 8 | - | - | - | 60 | 2 | 2196 550 |
| | CLIP | | | | | | 12 | 6000 020 |
| | Imperial, PY1 | 8 | - | - | - | 60 | 2 | 2196 739 |
| | CLIP | | | | | | 8 | 6000 050 |
| | Le, PY1 | 8 | - | - | - | 60 | 2 | 2196 740 |
| | CLIP | | | | | | 6 | 6000 020 |
| | Baron, PY1 | 8 | - | - | - | 60 | 2 | 2196 741 |
| | CLIP | | | | | | 8 | 6000 020 |
| | NAME LETTER, "C" PY1 | 8 | - | - | - | 60 | 2 | 2196 867 |
| | "R" PY1 | 8 | - | - | - | 60 | 2 | 2096 868 |
| | "O" PY1 | 8 | - | - | - | 60 | 2 | 2196 869 |
| | "W" PY1 | 8 | - | - | - | 60 | 2 | 2196 870 |
| | "N" PY1 | 8 | - | - | - | 60 | 2 | 2196 871 |
| | CLIP | | | | | | 10 | 6010 174 |
| | ORNAMENT PACKAGE, Top, PD1-L, PD3, PD4 | 6-8 | - | 60 | - | - | 2 | *2196 412 |
| | WASHER | | | | | | 4 | 1903 605 |
| | NUT | | | | | | 4 | 446 026 |
| | Top, PD2-H | 8 | - | 60 | - | - | 2 | 2196 413 |
| | WASHER | | | | | | 4 | 1903 605 |
| | NUT | | | | | | 4 | 446 026 |
| | Top | 8 | - | - | 60 | 60 | 2 | 2196 500 |
| | NUT | | | | | | 6 | 151 497 |
| | MEDALLION, Side, PC2 | 8 | - | - | - | 60 | 2 | 1903 620 |
| | Front, PY1 | 8 | - | - | - | 60 | 2 | 1863 120 |
| 12-15-22 | NUT, Name Plate, PD1, PD2 | 8 | - | 60 | - | - | 8 | *6010 128 |
| | PC1, PC2 | 8 | - | - | - | 60 | ★ | 6000 020 |
| 12-15-23 | BASE PACKAGE, Top Ornament, Right, PD2 | 8 | - | 60 | - | - | 1 | *2196 414 |
| | Left | 8 | - | 60 | - | - | 1 | 2196 415 |
| | NUT | | | | | | 4 | 446 026 |
| | NUT | | | | | | 2 | 120 375 |
| | Side Medallion, PC2 | 8 | - | - | - | 60 | 2 | 2196 558 |
| | CLIP | | | | | | 6 | 6000 020 |
| | Front Medallion, PY1 | 8 | - | - | - | 60 | 2 | 2196 728 |
| | SCREW | | | | | | 4 | 161 895 |
| | BASE, Name Plate, New Yorker, PC3 | 8 | - | - | - | 60 | 2 | 1903 779 |
| | Le, PY1 | 8 | - | - | - | 60 | 2 | 1903 264 |
| | Baron, PY1 | 8 | - | - | - | 60 | 2 | 1903 265 |
| 12-15-27 | CLIP, Side Name Plate | 8 | - | 60 | - | 60 | ★ | 6000 020 |
| | Medallion, PC2 | 8 | - | - | - | 60 | 6 | 6000 020 |
| | Name Plate, PY1 | 8 | - | - | - | 60 | 14 | 6000 020 |
| | Name Letter, PY1 | 8 | - | - | - | 60 | 10 | 6010 174 |
| 12-15-30 | WASHER, Top Ornament | 8 | - | 60 | - | - | 4 | *1903 605 |
| | | 8 | - | 60 | - | - | 2 | *1903 606 |

## NOTES



MyMopar.com

| CODE | PART NAME AND DESCRIPTION | NO. OF CYL. | PLYMOUTH | DODGE | DESOTO | CHRYSLER AND IMPERIAL | PER CAR | PART NUMBER |
|---|---|---|---|---|---|---|---|---|

## NOTES



MyMopar.com

# GROUP 13 - FRAME

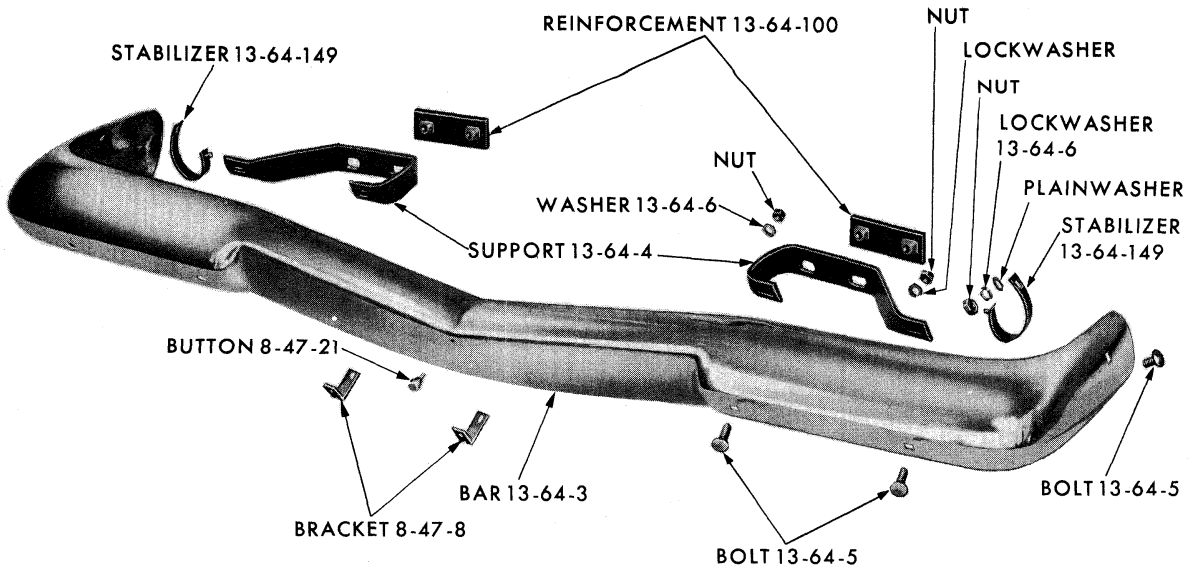


**PARTS INDICATED BY NAME ONLY - ORDER BY DESCRIPTION**

**19x8619**

FRONT BUMPER - PLYMOUTH PP1-2

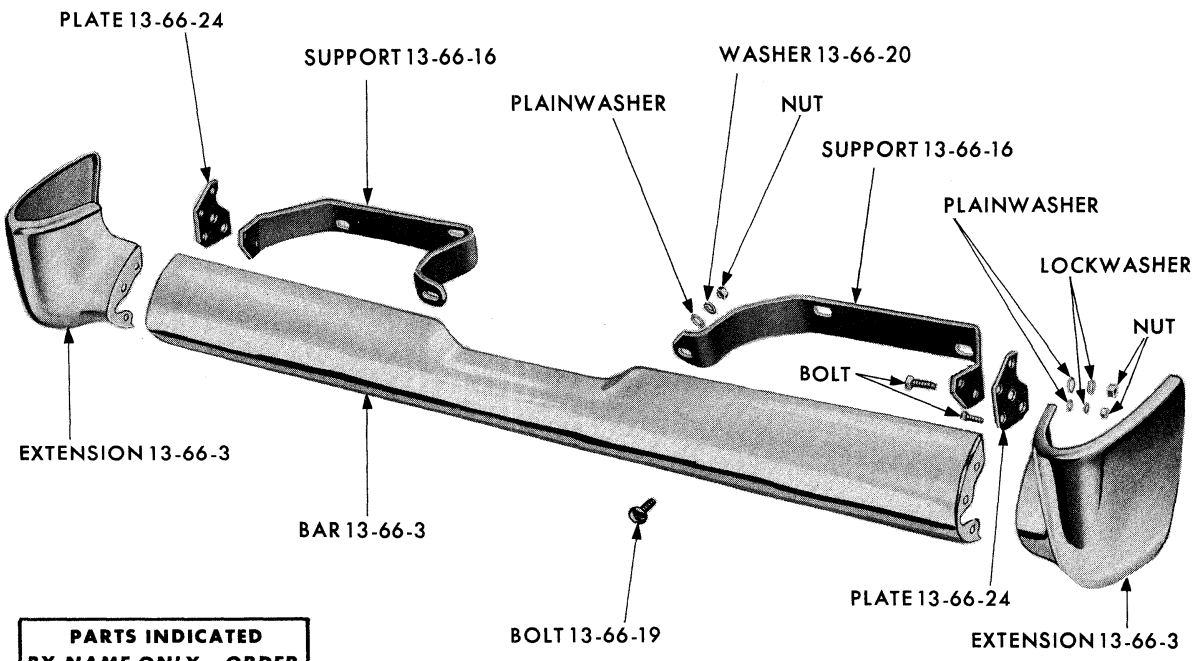


**PARTS INDICATED BY NAME ONLY - ORDER BY DESCRIPTION**

**19x8656**

REAR BUMPER - PLYMOUTH PP1-2 (EXCEPT SUBURBANS)



MyMopar.com

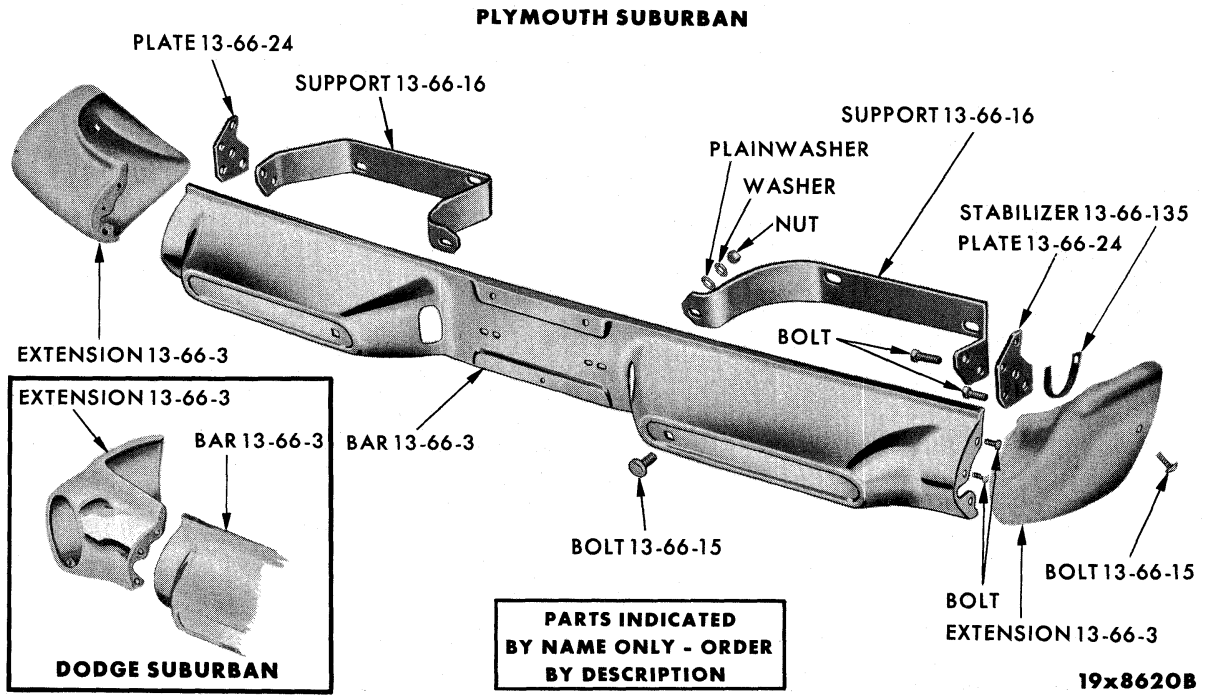


REAR BUMPER - PLYMOUTH PP1-2 AND DODGE PD1-3-4 SUBURBANS

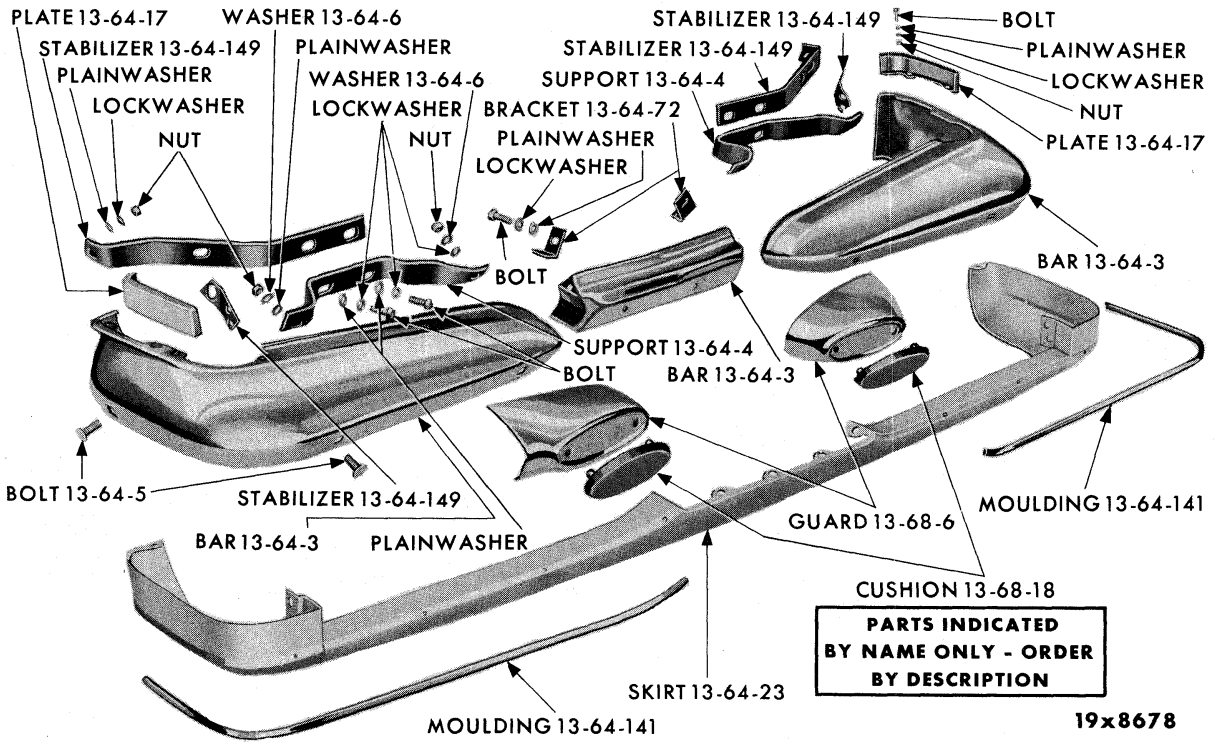


FRONT BUMPER - DODGE PD1-2-3-4



MyMopar.com

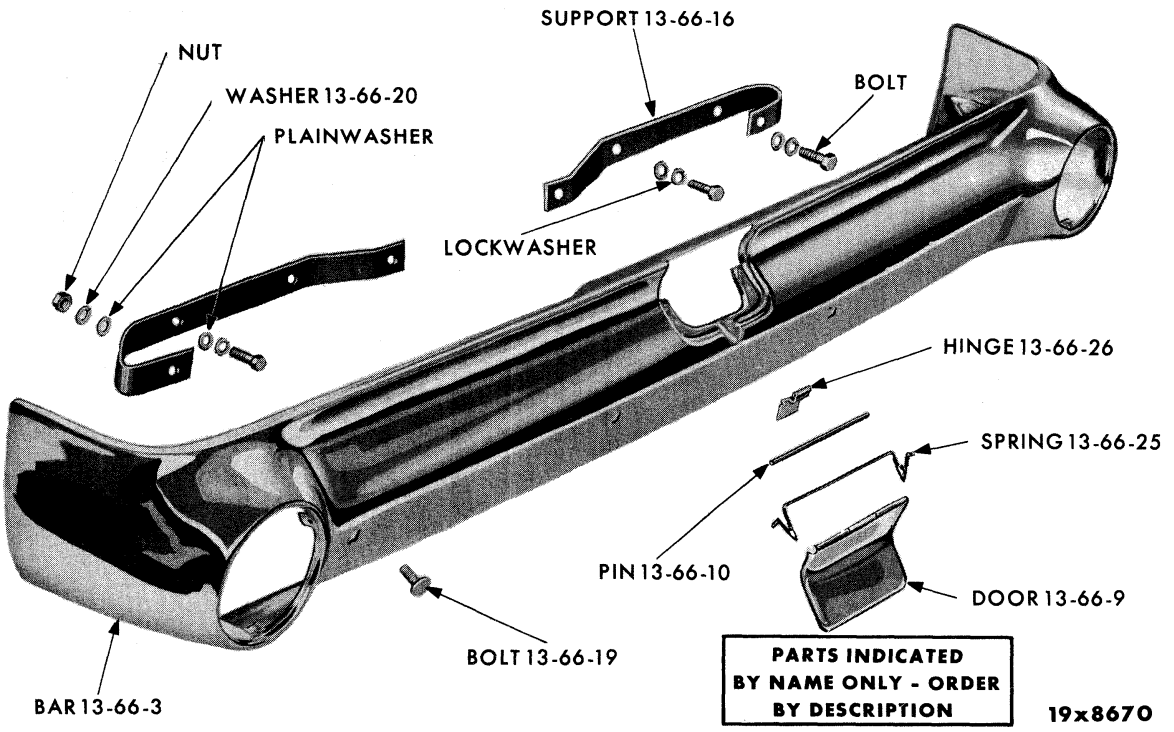


REAR BUMPER - DODGE PD1-2-3-4

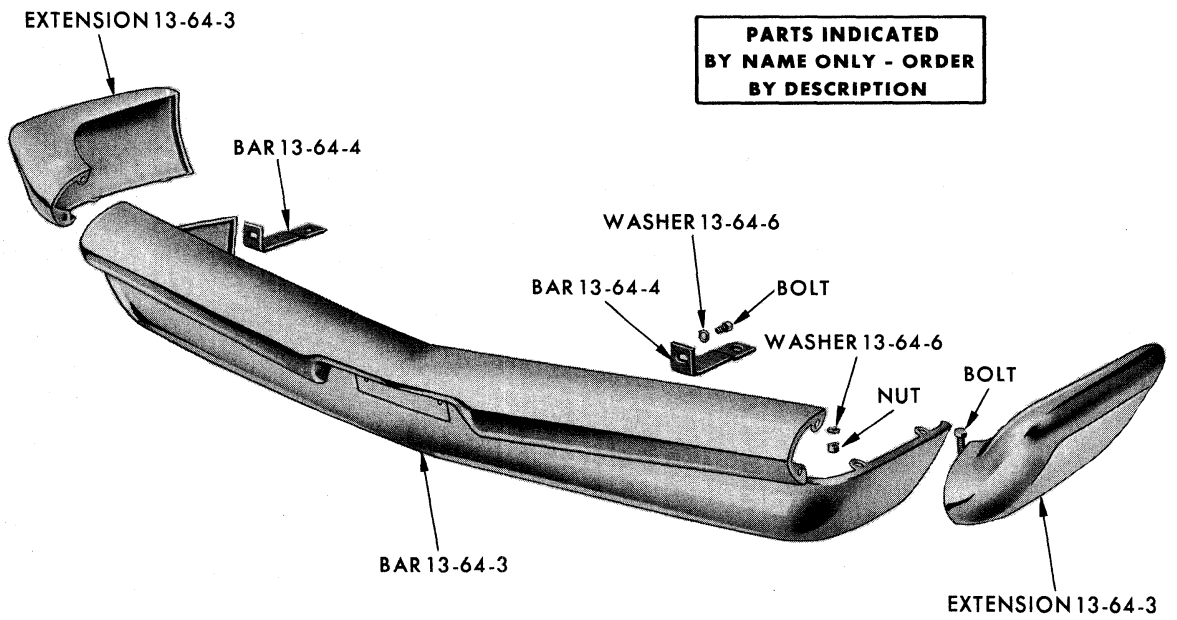


FRONT BUMPER - DESOTO PS1-3 AND CHRYSLER PC1


MyMopar.com

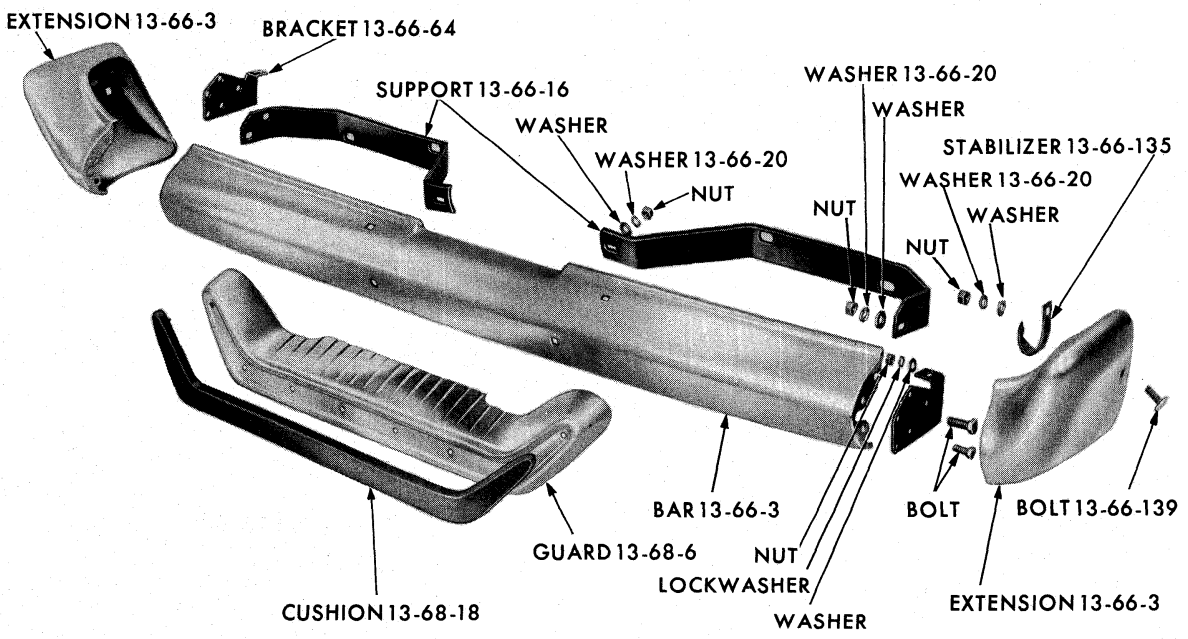


REAR BUMPER - DESOTO PS1-3

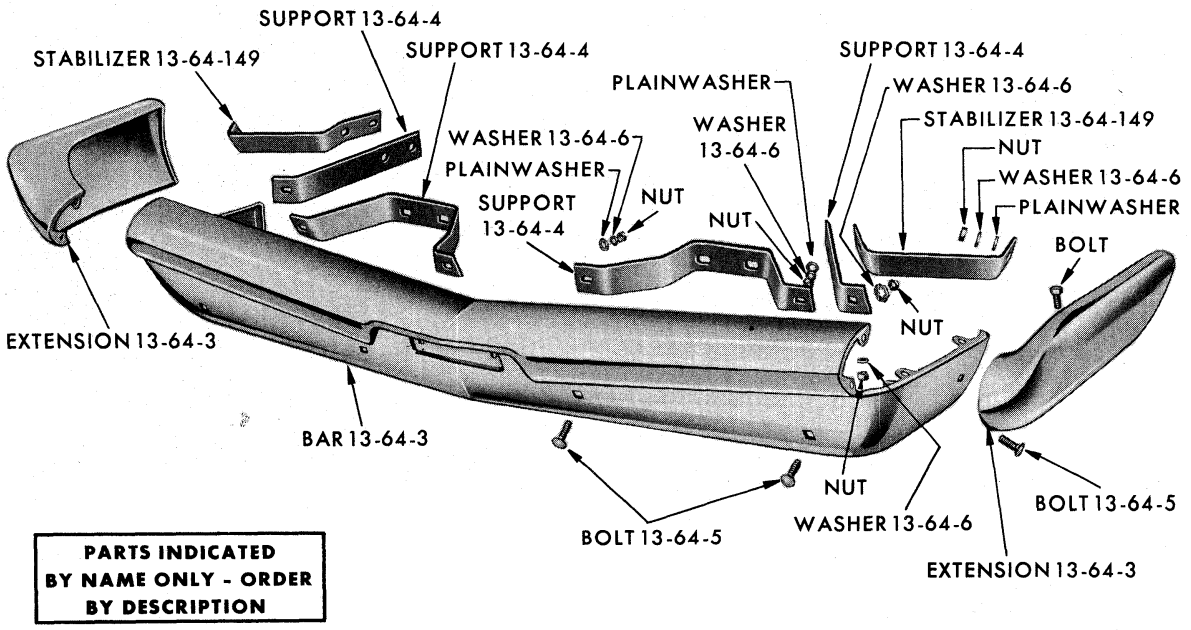


FRONT BUMPER - CHRYSLER PC2-3 AND PC300F



MyMopar.com

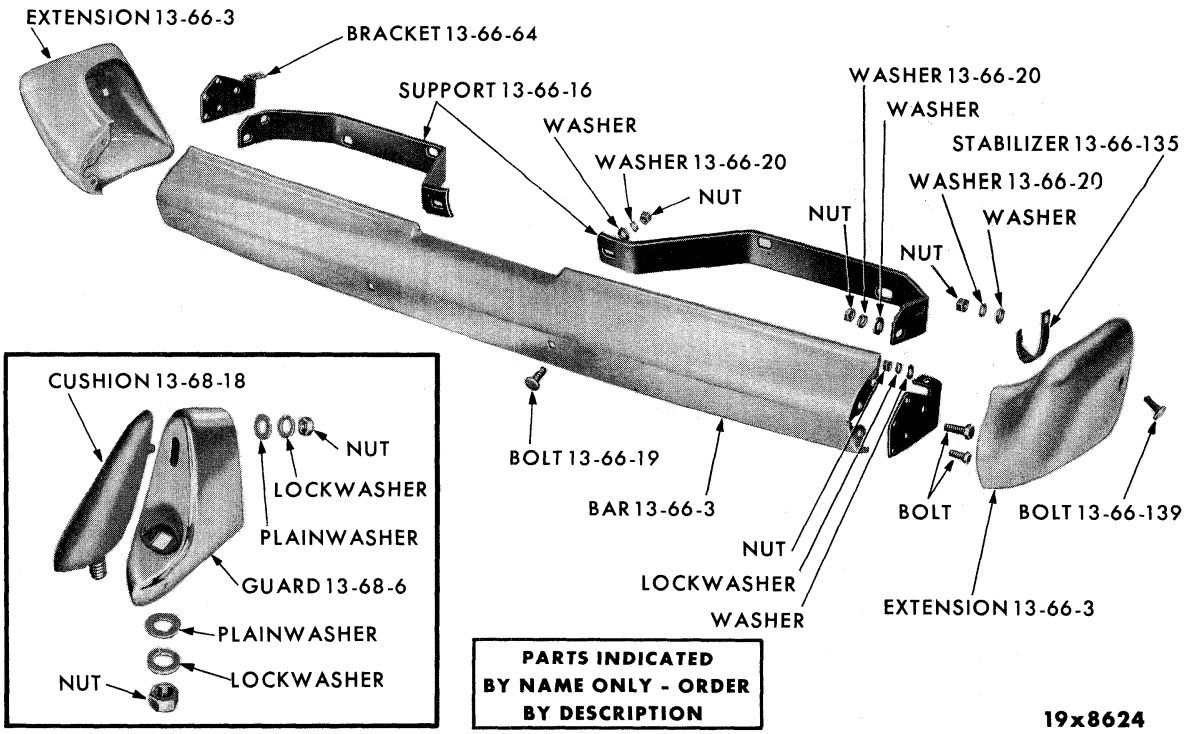


REAR BUMPER - CHRYSLER PC1-2-3 AND PC300F

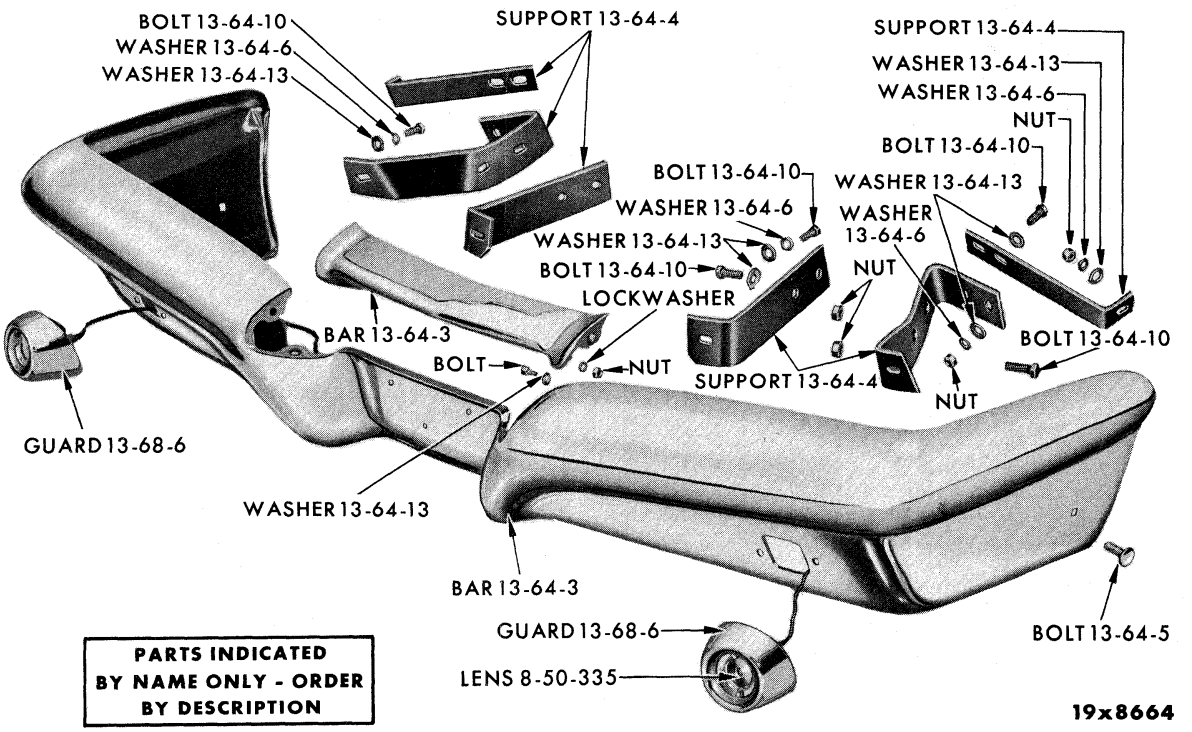


FRONT BUMPER - IMPERIAL PY1


MyMopar.com

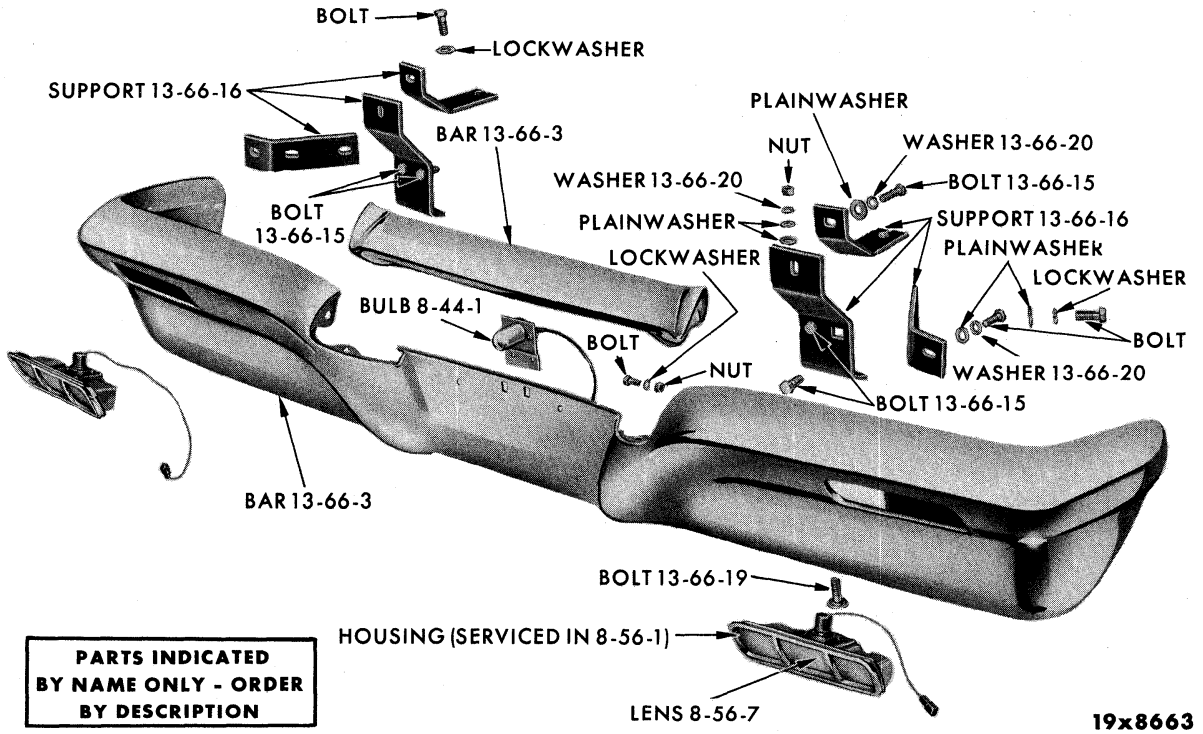


REAR BUMPER - IMPERIAL PY1

## NOTES



MyMopar.com

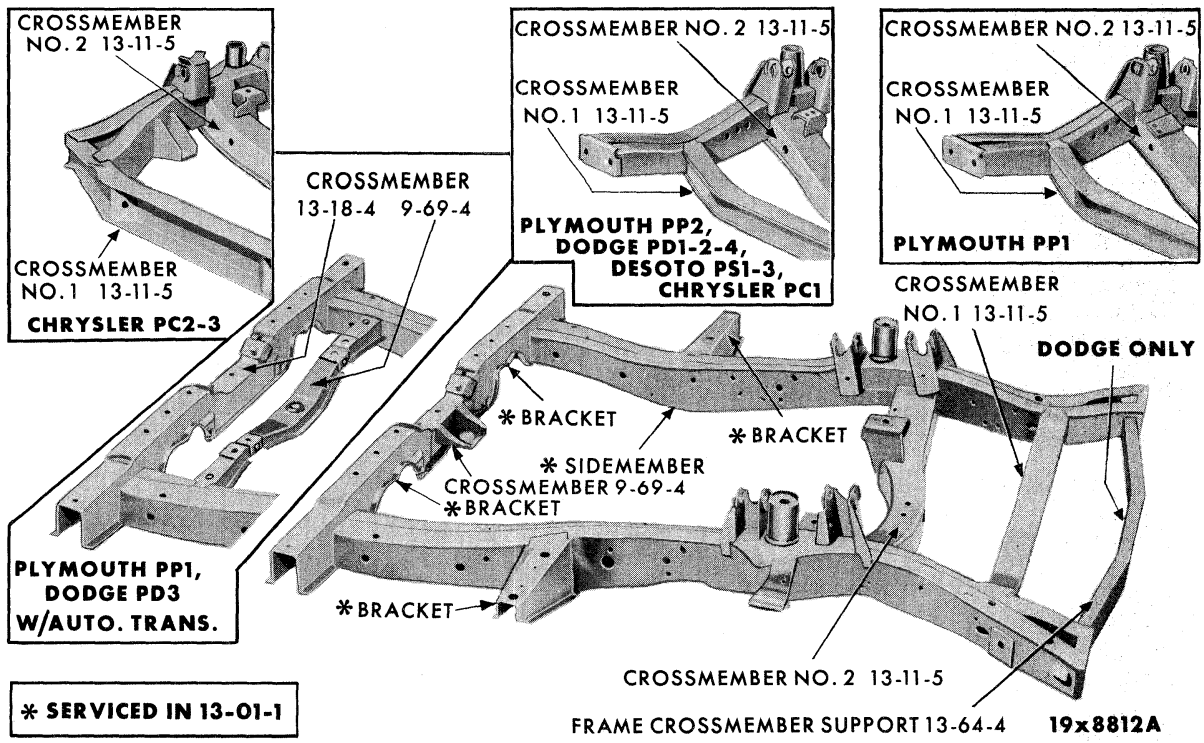


FRAME - EXCEPT IMPERIAL PY1

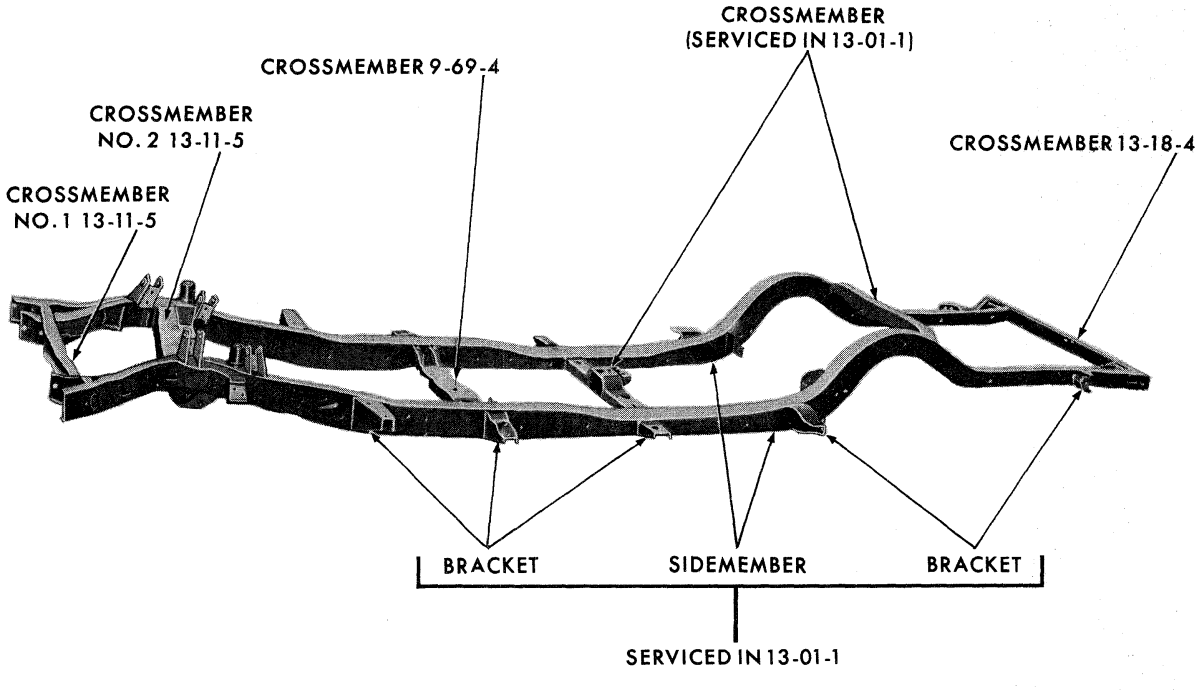


FRAME - IMPERIAL PY1



MyMopar.com

| CODE | PART NAME AND DESCRIPTION | NO. OF CYL. | PLYMOUTH | DODGE | DESOTO | CHRYSLER AND IMPERIAL | PER CAR | PART NUMBER |
|---|---|---|---|---|---|---|---|---|

## NOTES


MyMopar.com

# GROUP 13 - FRAME

| CODE | PART NAME AND DESCRIPTION | NO. OF CYL. | PLYMOUTH | DODGE | DESOTO | CHRYSLER AND IMPERIAL | PER CAR | PART NUMBER |
|---|---|---|---|---|---|---|---|---|
| **13-01-0** | **FRAME ASSEMBLY** | | | | | | | |
| 13-01-1 | FRAME, PP1, PD3 | 6 | 60 | 60 | - | - | 1 | 2122 623 |
| | PP2, PD1, PD2, PD4, PC1 | 8 | 60 | 60 | 60 | 60 | 1 | 2122 622 |
| | PC2, PC3 | 8 | - | - | - | 60 | 1 | 2123 390 |
| | PY1 except Cv. Cp. | 8 | - | - | - | 60 | 1 | ⊟2123 391 |
| | PY1 Cv. Cp. | 8 | - | - | - | 60 | 1 | 1944 369 |
| **13-11-0** | **FRAME FRONT CROSSMEMBER** | | | | | | | |
| 13-11-5 | CROSSMEMBER, No. 1, PC1 | 6-8 | 60 | 60 | 60 | 60 | 1 | 1940 961 |
| | PC2, PC3 | 8 | - | - | - | 60 | 1 | 1940 920 |
| | PY1 | 8 | - | - | - | 60 | 1 | 2200 801 |
| | No. 2, w/BRACKETS, PP1, PD3 | 6 | 60 | 60 | - | - | 1 | ⊟2204 317 |
| | PP2, PD1, PD2, PD4, PC1 | 8 | 60 | 60 | 60 | 60 | 1 | 2122 620 |
| | PC2, PC3, PY1 | 8 | - | - | - | 60 | 1 | 2122 621 |
| **13-18-0** | **FRAME REAR CROSSMEMBER** | | | | | | | |
| 13-18-4 | CROSSMEMBER, w/Auto. Trans. | 6 | 60 | 60 | - | - | 1 | 2123 354 |
| | PY1 | 8 | - | - | - | 60 | 1 | 1944 407 |
| 13-18-31 | SEAL, Frame Sub-Sidemember Splash Shield, PC2, PC3, PY1 (sold by the foot) | 8 | - | - | - | 60 | ★ | 1242 974 |
| 13-18-32 | CLIP, Frame Sub-Sidemember Splash Shield, PC2, PC3, PY1 | 8 | - | - | - | 60 | 2 | 1674 082 |
| **13-34-0** | **BATTERY HOLD-DOWN STRAP** | | | | | | | |
| 13-34-3 | STRAP | 6-8 | 60 | 60 | 60 | 60 | 1 | 1828 352 |
| **13-36-0** | **BATTERY HOLD-DOWN STUD** | | | | | | | |
| 13-36-5 | STUD, Inner | 6-8 | 60 | 60 | 60 | 60 | 1 | 1408 918 |
| | Outer | 6-8 | 60 | 60 | 60 | 60 | 1 | 1408 915 |
| **13-54-0** | **FRAME REAR SPRING HANGER** | | | | | | | |
| 13-54-4 | HANGER, Rear Spring, Front, except Sub., PC1, PC2, PC3 | 6-8 | 60 | 60 | 60 | 60 | 2 | 1948 359 |
| | Sub. | 6-8 | 60 | 60 | - | 60 | 2 | 1948 867 |
| | PY1 | 8 | - | - | - | 60 | 2 | 1734 502 |
| 13-54-11 | BOLT, Rear Hanger, PC1, PC2, PC3 | 6-8 | 60 | 60 | 60 | 60 | 4 | 2200 685 |
| 13-54-15 | HANGER, Rear Spring, Rear, PD3, PD4, PC2, PC3, except Sub. | 6-8 | 60 | 60 | - | 60 | 2 | 1948 354 |
| | Sub., PC1 | 6-8 | 60 | 60 | - | 60 | 2 | 1948 878 |
| | Except Sub., PD1, PD2, PC1 | 8 | - | 60 | 60 | 60 | 2 | 1948 880 |
| | Sub., PC3 | 8 | - | - | - | 60 | 2 | 1948 377 |
| | PY1 | 8 | - | - | - | 60 | 2 | 1735 128 |
| **13-64-0** | **FRONT BUMPER FACE BAR** | | | | | | | |
| 13-64-3 | BAR, Face | 6-8 | 60 | - | - | - | 1 | 1948 067 |
| | Used w/Guard | 8 | - | - | 60 | - | 1 | 1948 961 |
| | Used w/o Guard, PS1, PC1 | 8 | - | - | 60 | 60 | 1 | 1948 081 |
| | PC2, PC3 | 8 | - | - | - | 60 | 1 | 1940 386 |
| | PY1 | 8 | - | - | - | 60 | 1 | 1940 390 |
| | Center | 6-8 | - | 60 | - | - | 1 | 1940 369 |
| | Right, Impact Bar, used w/o Guard | 6-8 | - | 60 | - | - | 1 | 1940 372 |
| | Left, Impact Bar, used w/o Guard | 6-8 | - | 60 | - | - | 1 | 1940 373 |
| | Right, Impact Bar, used w/Guard | 6-8 | - | 60 | - | - | 1 | 1945 968 |
| | Left, Impact Bar, used w/Guard | 6-8 | - | 60 | - | - | 1 | 1945 969 |
| | Right, Extension, PC1, PC2, PC3 | 8 | - | - | 60 | 60 | 1 | 1940 384 |
| | Left, Extension, PC1, PC2, PC3 | 8 | - | - | 60 | 60 | 1 | 1940 385 |
| | Tie Bar, PY1 | 8 | - | - | - | 60 | 1 | 1940 391 |

★ Indicates use as required. Numerals in parentheses ( ) refer to notes. Printed in U.S.A.
⊟ Indicates parts not listed in any previous parts book. Prices and specifications subject to change without notice.
* Indicates change or addition.



Dec. 9, 1960 Supersedes April 20, 1960.

MyMopar.com

| CODE | PART NAME AND DESCRIPTION | NO. OF CYL. | PLYMOUTH | DODGE | DESOTO | CHRYSLER AND IMPERIAL | PER CAR | PART NUMBER |
|---|---|---|---|---|---|---|---|---|
| **13-64-0 FRONT BUMPER FACE BAR - Cont'd** | | | | | | | | |
| 13-64-4 | SUPPORT, Right | 6-8 | 60 | - | - | - | 1 | 1948 950 |
| | Left | 6-8 | 60 | - | - | - | 1 | 1948 951 |
| | Right | 6-8 | - | 60 | - | - | 1 | 1948 022 |
| | Left | 6-8 | - | 60 | - | - | 1 | 1948 023 |
| | Frame Crossmember | 6-8 | - | 60 | - | - | 1 | 1944 399 |
| | Upper, PC1 | 8 | - | - | 60 | 60 | 2 | 1948 099 |
| | Lower, PC1 | 8 | - | - | 60 | 60 | 2 | ⊟1948 994 |
| | Right, Outer, PC2, PC3 | 8 | - | - | - | 60 | 1 | 1945 956 |
| | Left, Outer, PC2, PC3 | 8 | - | - | - | 60 | 1 | 1945 957 |
| | Right, PC2, PC3 | 8 | - | - | - | 60 | 1 | 1945 954 |
| | Left, PC2, PC3 | 8 | - | - | - | 60 | 1 | 1945 955 |
| | Right, Outer End, PY1 | 8 | - | - | - | 60 | 1 | 1945 938 |
| | Left, Outer End, PY1 | 8 | - | - | - | 60 | 1 | 1945 939 |
| | Right, Inner, PY1 | 8 | - | - | - | 60 | 1 | 1945 936 |
| | Left, Inner, PY1 | 8 | - | - | - | 60 | 1 | 1945 937 |
| | Right, Outer, PY1 | 8 | - | - | - | 60 | 1 | 1945 934 |
| | Left, Outer, PY1 | 8 | - | - | - | 60 | 1 | 1945 935 |
| 13-64-5 | BOLT, Bumper to Support, PC2, PC3 | 6-8 | 60 | 60 | - | 60 | 4 | 1551 097 |
| | Extension to Support and Bumper, PC2, PC3 | 8 | - | - | - | 60 | ★ | 1551 097 |
| | Bumper to Outer Support, PY1 | 8 | - | - | - | 60 | 2 | 1551 766 |
| | STUD, Bumper to Support, PC2, PC3 | 8 | - | - | - | 60 | 2 | *1730 281 |
| 13-64-6 | WASHER, Bumper and Support Bolt Lock | 6-8 | 60 | 60 | 60 | 60 | ★ | 1137 795 |
| | Pyramidal Toothed, PC1, PC2, PC3 | 8 | - | - | 60 | 60 | 2 | *1945 966 |
| 13-64-8 | BOLT, Bumper to Frame, PC1 | 8 | - | - | 60 | 60 | 4 | 1948 100 |
| 13-64-10 | STUD, Bumper Support Inner, PC2, PC3 | 8 | - | - | - | 60 | 4 | 1639 477 |
| | To Frame | 6-8 | - | 60 | - | - | 4 | 1820 114 |
| | To Frame, PY1 | 8 | - | - | - | 60 | 8 | 1948 970 |
| | NUT, w/RETAINER, Bumper Support to Frame Bolt, PC1 | 8 | - | - | - | 60 | 2 | ⊟6012 083 |
| 13-64-13 | WASHER, Support to Frame Bolt, PY1 | 8 | - | - | - | 60 | 6 | 1948 969 |
| | | 6-8 | 60 | - | - | - | 4 | *1616 746 |
| | Bumper to Crossmember Bolt | 6-8 | - | 60 | - | - | 2 | ⊟1943 554 |
| 13-64-17 | PLATE, Trim, Right | 6-8 | - | 60 | - | - | 1 | 1940 374 |
| | Left | 6-8 | - | 60 | - | - | 1 | 1940 375 |
| 13-64-23 | SKIRT, Front Bumper | 6-8 | - | 60 | - | - | 1 | 1940 371 |
| 13-64-57 | PLUG, Tie Bar Hole | 6-8 | 60 | - | - | - | 2 | *6012 060 |
| 13-64-72 | BRACKET, Bumper to Crossmember, Right | 6-8 | - | 60 | - | - | 1 | 1948 040 |
| | Left | 6-8 | - | 60 | - | - | 1 | 1948 041 |
| 13-64-100 | REINFORCEMENT, Support to Frame | 6-8 | 60 | - | - | - | 2 | 1730 272 |
| 13-64-141 | MOULDING, Skirt, Right, PD1, PD2 | 8 | - | 60 | - | - | 1 | 1948 974 |
| | Left, PD1, PD2 | 8 | - | 60 | - | - | 1 | 1948 975 |
| 13-64-144 | CLIP, Moulding to Skirt, PD1, PD2 | 8 | - | 60 | - | - | 12 | ⊟6010 093 |
| 13-64-149 | STABILIZER, w/BOLT | 6-8 | 60 | - | - | - | 2 | 1948 108 |
| | Right | 6-8 | - | 60 | - | - | 1 | 1948 024 |
| | Left | 6-8 | - | 60 | - | - | 1 | 1948 025 |
| | Right, Skirt to Support | 6-8 | - | 60 | - | - | 1 | 1948 042 |
| | Left, Skirt to Support | 6-8 | - | 60 | - | - | 1 | 1948 043 |
| | Right, Support, PC2, PC3 | 8 | - | - | - | 60 | 1 | 1948 062 |
| | Left, Support, PC2, PC3 | 8 | - | - | - | 60 | 1 | 1948 063 |
| 13-64-151 | NUT, w/WASHER, Stabilizer to Fender Bolt | 6-8 | 60 | - | - | - | 2 | 6012 008 |
| 13-64-152 | BOLT, Bumper to Stabilizer | 6-8 | 60 | 60 | - | - | 2 | 1551 097 |
| **13-66-0 REAR BUMPER FACE BAR** | | | | | | | | |
| 13-66-3 | BAR, Face, except Sub., used w/o Guards | 6-8 | - | 60 | - | - | 1 | 1940 379 |
| | Except Sub., used w/Guards | 6-8 | - | 60 | - | - | 1 | 1940 380 |
| | Used w/Guards | 8 | - | - | 60 | - | 1 | 1948 960 |
| | Except Sub., used w/o Guards, PS1, PC1, PC2 | 8 | - | - | 60 | 60 | 1 | 1940 387 |
| | Except Sub., used w/Guards, PC1, PC2, PC3, PY1 | 8 | - | - | - | 60 | 1 | 1948 083 |
| | | 8 | - | - | - | 60 | 1 | 1940 392 |



MyMopar.com

## 13-66-0 REAR BUMPER FACE BAR - Cont'd

| CODE | PART NAME AND DESCRIPTION | NO. OF CYL. | PLYMOUTH | DODGE | DESOTO | CHRYSLER AND IMPERIAL | PER CAR | PART NUMBER |
|---|---|---|---|---|---|---|---|---|
| 13-66-3 | BAR - Cont'd | | | | | | | |
| | Center, except Sub. | 6-8 | 60 | - | - | - | 1 | 1941 022 |
| | Sub. | 6-8 | 60 | - | - | - | 1 | 1941 005 |
| | Sub. | 6-8 | - | 60 | - | - | 1 | 1940 408 |
| | Sub., PC1, PC3 | 8 | - | - | - | 60 | 1 | 1940 409 |
| | Right, Extension, except Sub. | 6-8 | 60 | - | - | - | 1 | 1941 020 |
| | Left, Extension, except Sub. | 6-8 | 60 | - | - | - | 1 | 1941 021 |
| | Right, Extension, Sub. | 6-8 | 60 | - | - | - | 1 | 1940 410 |
| | Left, Extension, Sub. | 6-8 | 60 | - | - | - | 1 | 1940 411 |
| | Right, Extension, Sub., used w/Step Pad | 6-8 | - | 60 | - | - | 1 | 1948 954 |
| | Left, Extension, Sub., used w/Step Pad | 6-8 | - | 60 | - | - | 1 | 1948 955 |
| | Right, Extension, Sub., used w/o Step Pad | 6-8 | - | 60 | - | - | 1 | 1940 412 |
| | Left, Extension, Sub., used w/o Step Pad | 6-8 | - | 60 | - | - | 1 | 1940 413 |
| | Right, Extension, PC1, PC2, PC3 | 8 | - | - | 60 | 60 | 1 | 1940 388 |
| | Left, Extension, PC1, PC2, PC3 | 8 | - | - | 60 | 60 | 1 | 1940 389 |
| | Tie Bar, PY1 | 8 | - | - | - | 60 | 1 | 1940 393 |
| 13-66-9 | DOOR, Bumper, except Sub. | 6-8 | - | 60 | - | - | 1 | 1940 378 |
| 13-66-10 | PIN, Bumper Door, except Sub. | 6-8 | - | 60 | - | - | 1 | 1940 395 |
| 13-66-14 | COVER, Back-Up Lamp Opening, PD1, PD2 | 8 | - | 60 | - | - | 2 | 2094 082 |
| | PD3, PD4 | 6-8 | - | 60 | - | - | 2 | 2094 083 |
| 13-66-15 | BOLT, Bumper to Vertical and Upper Support, PY1 | 8 | - | - | - | 60 | 2 | 1820 113 |
| | Bumper Vertical Support to Frame, PY1 | 8 | - | - | - | 60 | 4 | 1945 945 |
| | PLUG, Button, Step Bolt Hole, Sub. | 6-8 | 60 | - | - | 60 | 2 | 6012 070 |
| 13-66-16 | SUPPORT, Right, Sub. | 6-8 | 60 | - | - | - | 1 | 1945 952 |
| | Left, Sub. | 6-8 | 60 | - | - | - | 1 | 1945 953 |
| | Right, except Sub. | 6-8 | 60 | - | - | - | 1 | 1948 038 |
| | Left, except Sub. | 6-8 | 60 | - | - | - | 1 | 1948 039 |
| | Right, except Sub. | 6-8 | - | 60 | - | - | 1 | 1948 070 |
| | Left, except Sub. | 6-8 | - | 60 | - | - | 1 | 1948 071 |
| | Right, Sub. | 6-8 | - | 60 | - | - | 1 | 1945 950 |
| | Left, Sub. | 6-8 | - | 60 | - | - | 1 | 1945 951 |
| | Right, except Sub., PC1, PC2, PC3 | 8 | - | - | 60 | 60 | 1 | 1940 376 |
| | Left, except Sub., PC1, PC2, PC3 | 8 | - | - | 60 | 60 | 1 | 1940 377 |
| | Right, Sub., PC1, PC3 | 8 | - | - | - | 60 | 1 | 1945 948 |
| | Left, Sub., PC1, PC3 | 8 | - | - | - | 60 | 1 | 1945 949 |
| | Vertical, PY1 | 8 | - | - | - | 60 | 2 | 1941 031 |
| | Right, Outer, PY1 | 8 | - | - | - | 60 | 1 | 1941 032 |
| | Left, Outer, PY1 | 8 | - | - | - | 60 | 1 | 1941 033 |
| | Upper, PY1 | 8 | - | - | - | 60 | 2 | 1941 034 |
| 13-66-17 | WASHER, Bumper Vertical Support to Frame Bolt, PY1 | 8 | - | - | - | 60 | 4 | 1616 746 |
| 13-66-18 | SHIM, Support to Frame, PY1, .06" thk. | 8 | - | - | - | 60 | ★ | ⊟6010 025 |
| 13-66-19 | BOLT, Bumper to Support | 6-8 | 60 | 60 | 60 | 60 | ★ | 1551 097 |
| 13-66-20 | WASHER, Bumper and Support Bolt Lock | 6-8 | 60 | 60 | 60 | 60 | ★ | 1137 795 |
| | Bumper to Crossmember Bolt Lock | 6-8 | 60 | 60 | - | - | 4 | 1943 554 |
| | Support to Extension Bolt Lock | 8 | - | - | 60 | - | 4 | 1945 966 |
| 13-66-23 | BUTTON, Jacking, except Sub., PC1, PC2, PC3 | 8 | - | - | 60 | 60 | 2 | 1948 972 |
| 13-66-24 | PLATE, to Support, except Sub. | 6-8 | 60 | - | - | - | 2 | 1948 045 |
| | Sub. | 6-8 | 60 | 60 | - | 60 | 2 | 1948 015 |
| 13-66-25 | SPRING, Bumper Door, except Sub. | 6-8 | - | 60 | - | - | 1 | 1948 076 |
| 13-66-26 | HINGE, Bumper Door, except Sub. | 6-8 | - | 60 | - | - | 2 | 1948 077 |
| 13-66-27 | BUSHING, Bumper Door Pin, except Sub. | 6-8 | - | 60 | - | - | 1 | 1948 967 |
| 13-66-28 | FASTENER, Support Bar Jacking Bracket Pad, Sub. | 6-8 | 60 | 60 | - | 60 | 2 | 6006 456 |
| 13-66-64 | BRACKET, Bumper to Extension, Right, except Sub., PC1, PC2, PC3 | 8 | - | - | 60 | 60 | 1 | 1945 976 |
| | Left, except Sub., PC1, PC2, PC3 | 8 | - | - | 60 | 60 | 1 | 1945 977 |


MyMopar.com

| CODE | PART NAME AND DESCRIPTION | NO. OF CYL. | PLYMOUTH | DODGE | DESOTO | CHRYSLER AND IMPERIAL | PER CAR | PART NUMBER |
|---|---|---|---|---|---|---|---|---|
| **13-66-O REAR BUMPER FACE BAR - Cont'd** | | | | | | | | |
| 13-66-106 | DEFLECTOR, Deck Opening Lower Panel Stone, except Sub., PC1, PC2, PC3 | 8 | - | - | 60 | 60 | 1 | 1960 970 |
| 13-66-116 | SEAL, Stone Shield to Bumper, except Sub. | 6-8 | 60 | - | - | - | 1 | 1954 401 |
| | Deck Opening Lower Panel Stone Deflector, except Sub., PC1, PC2, PC3 | 8 | - | - | 60 | 60 | 1 | 1961 129 |
| 13-66-117 | RETAINER, Deck Opening Lower Panel to Rear Bumper Seal, except Sub. | 6-8 | 60 | - | - | - | 1 | 1954 572 |
| 13-66-135 | STABILIZER, w/NUT, Right, except Sub., PC1, PC2, PC3 | 8 | - | - | 60 | 60 | 1 | 1948 106 |
| | Left, except Sub., PC1, PC2, PC3 | 8 | - | - | 60 | 60 | 1 | 1948 107 |
| 13-66-139 | BOLT, Stabilizer to Bumper, except Sub., PC1, PC2, PC3 | 8 | - | - | 60 | 60 | 2 | 1551 098 |
| 13-66-147 | STEP PAD, 4 D. Sub., 3 Seater | 6-8 | 60 | - | - | 60 | 2 | 1948 032 |
| | 4 D. Sub., 3 Seater | 6-8 | - | 60 | - | - | 2 | 1948 095 |
| **13-68-O BUMPER GUARDS** | | | | | | | | |
| 13-68-6 | GUARD, Front, Right | 6-8 | - | 60 | - | - | 1 | 1945 960 |
| | Left | 6-8 | - | 60 | - | - | 1 | 1945 961 |
| | Right | 8 | - | - | 60 | - | 1 | 1940 990 |
| | Left | 8 | - | - | 60 | - | 1 | 1940 991 |
| | Right, PY1 | 8 | - | - | - | 60 | 1 | 1940 994 |
| | Left, PY1 | 8 | - | - | - | 60 | 1 | 1940 995 |
| | GUARD, Bumper, Rear, w/PILLAR, Right, except Sub. | 6-8 | - | 60 | - | - | 1 | 1948 958 |
| | Left, except Sub. | 6-8 | - | 60 | - | - | 1 | 1948 959 |
| | | 8 | - | - | 60 | - | 1 | 1948 047 |
| | Except Sub., PC1, PC2, PC3 | 8 | - | - | - | 60 | 2 | 1941 002 |
| 13-68-10 | WASHER, Bumper to Guard Bolt Lock, Rear | 8 | - | - | 60 | - | 3 | 1137 795 |
| | WASHER, Bumper to Support Bolt, Sub. | 6-8 | 60 | 60 | 60 | - | 2 | 1137 795 |
| 13-68-18 | CUSHION, Bumper Guard, Rear | 8 | - | - | 60 | - | 1 | 1948 048 |
| | Except Sub., PC1, PC2, PC3 | 8 | - | - | - | 60 | 2 | 1940 402 |
| | CUSHION, Bumper Guard, Front | 6-8 | - | 60 | - | - | 2 | 1945 964 |
| | Front | 8 | - | - | 60 | - | 2 | 1940 992 |
| **13-72-O BUMPER JACK AND HANDLE** | | | | | | | | |
| 13-72-1 | JACK, except Sub. | 6-8 | 60 | - | - | - | 1 | 2123 198 |
| | Sub. | 6-8 | 60 | - | - | - | 1 | 2123 196 |
| | Except Sub. | 6-8 | - | 60 | - | - | 1 | 2123 184 |
| | Sub. | 6-8 | - | 60 | - | - | 1 | 2123 826 |
| | PC1, PC2, PC3 | 8 | - | - | 60 | 60 | 1 | 2123 188 |
| | PY1 | 8 | - | - | - | 60 | 1 | 2123 193 |
| 13-72-2 | JACK HANDLE, PC1, PC2, PC3 | 6-8 | 60 | 60 | 60 | 60 | 1 | 1736 990 |
| | PY1 | 8 | - | - | - | 60 | 1 | 1737 009 |
| 13-72-3 | HOOK, Bumper except Sub. | 6-8 | 60 | - | - | - | 1 | B2201 012 |
| | Except Sub. | 6-8 | - | 60 | - | - | 1 | B2201 014 |
| | Sub. | 6-8 | 60 | - | - | - | 1 | B2201 013 |
| | PC1, PC2, PC3 | 8 | - | - | 60 | 60 | 1 | B2201 015 |
| | PY1 | 8 | - | - | - | 60 | 1 | B2201 017 |

## NOTES



MyMopar.com

Printed in U.S.A.
Page 14-1
October 1, 1959.

# GROUP 14 - FUEL

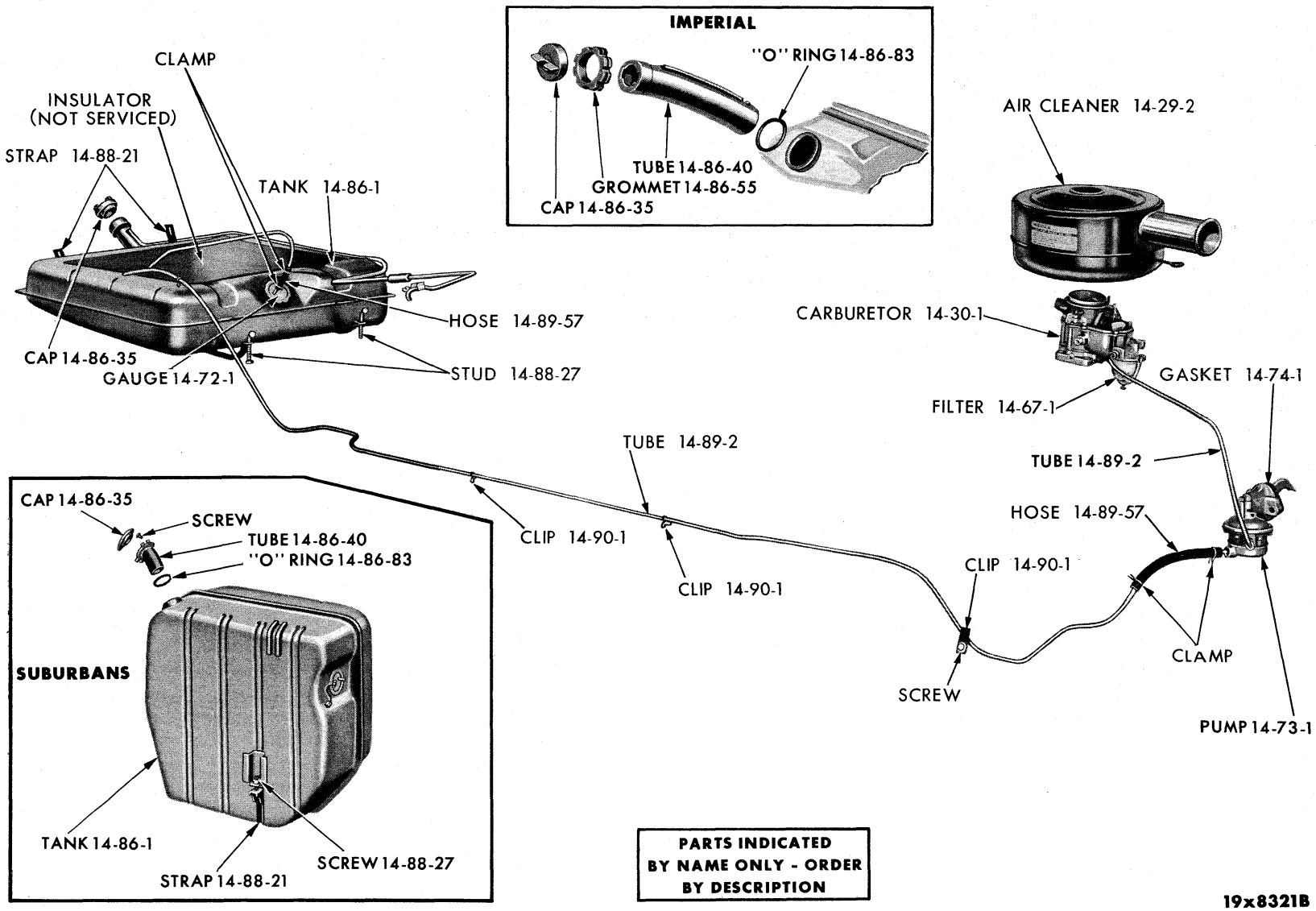


**PARTS INDICATED BY NAME ONLY - ORDER BY DESCRIPTION**

19x8321B



MyMopar.com

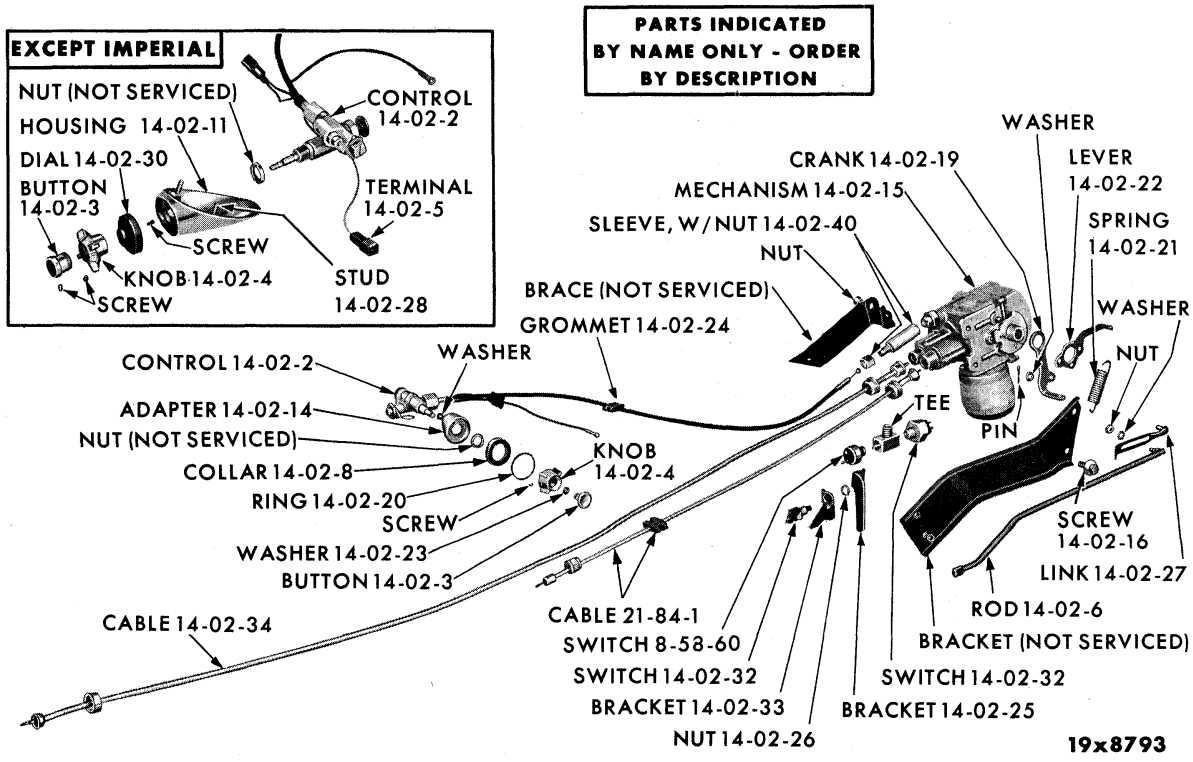


AUTO-PILOT SYSTEM

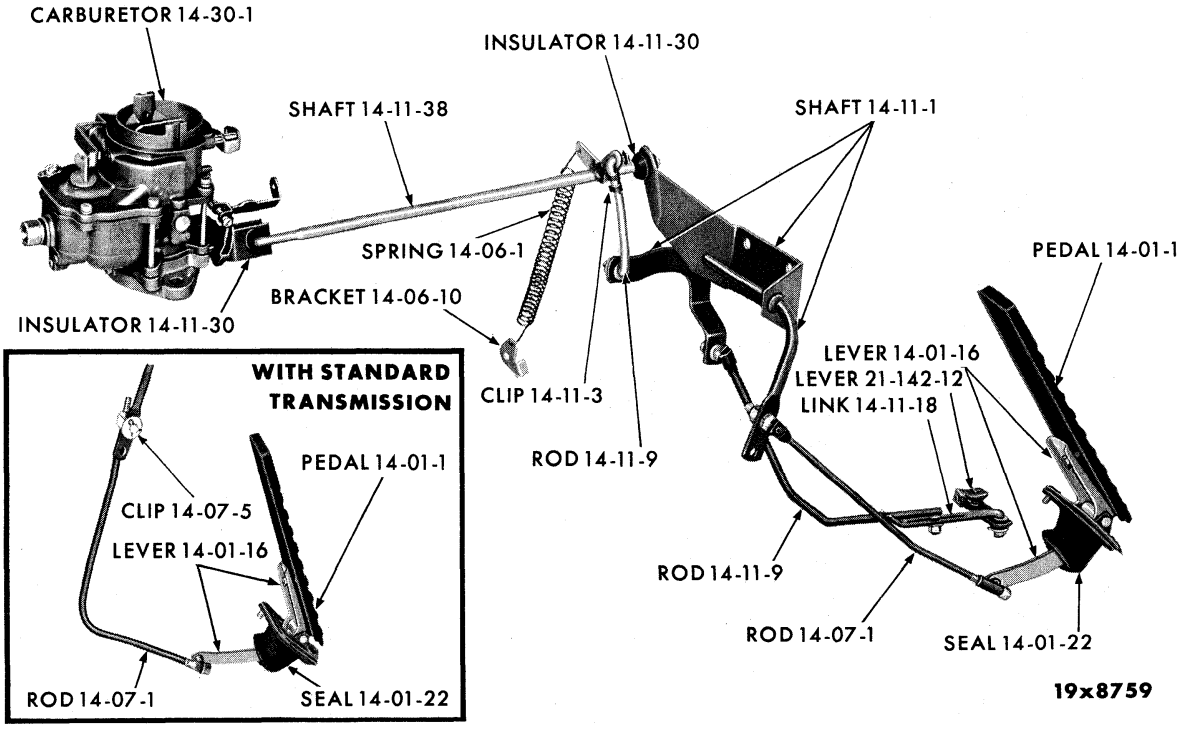


THROTTLE LINKAGE - 6 CYLINDER



MyMopar.com

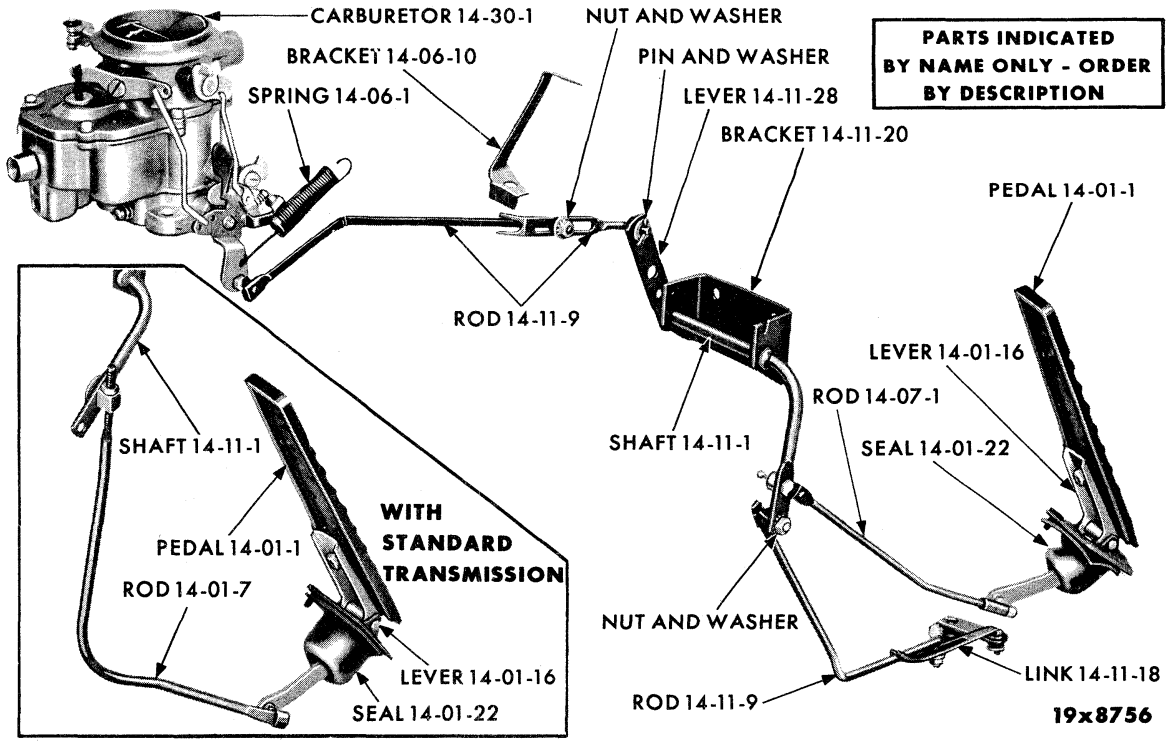


THROTTLE LINKAGE (V8 CYLINDER) - WITH STANDARD AND AUTOMATIC TRANSMISSION

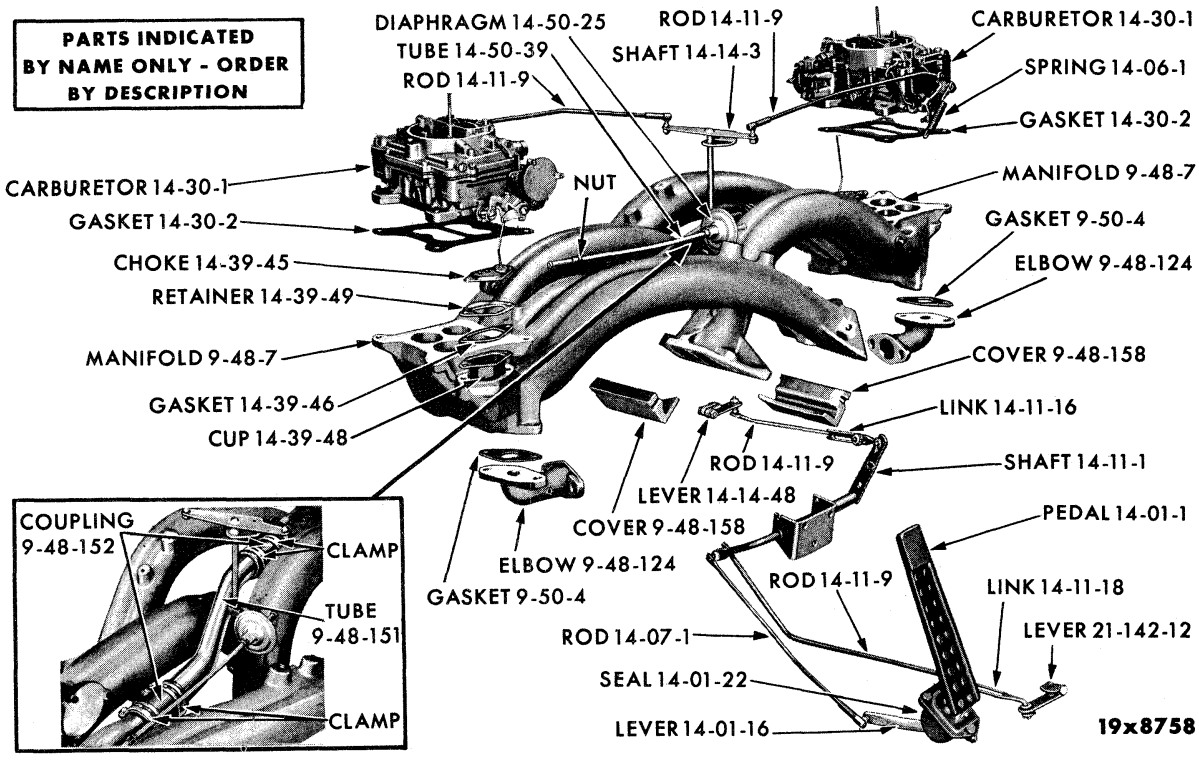


THROTTLE LINKAGE (V8 CYLINDER) - WITH RAM MANIFOLD


MyMopar.com

| CODE | PART NAME AND DESCRIPTION | NO. OF CYL. | PLYMOUTH | DODGE | DESOTO | CHRYSLER AND IMPERIAL | PER CAR | PART NUMBER |
|---|---|---|---|---|---|---|---|---|

## NOTES


MyMopar.com

# GROUP 14 - FUEL

## 14-01-0 ACCELERATOR PEDAL

| CODE | PART NAME AND DESCRIPTION | NO. OF CYL. | PLYMOUTH | DODGE | DESOTO | CHRYSLER AND IMPERIAL | PER CAR | PART NUMBER |
|---|---|---|---|---|---|---|---|---|
| 14-01-1 | PEDAL, except PY1 | 6-8 | 60 | 60 | 60 | 60 | 1 | 2121 967 |
| | PY1 | 8 | - | - | - | 60 | 1 | 2128 664 |
| 14-01-16 | LEVER, except PY1 | 6-8 | 60 | 60 | 60 | 60 | 1 | 1947 311 |
| | PY1 | 8 | - | - | - | 60 | 1 | 1858 704 |
| 14-01-22 | SEAL, Lever | 6-8 | 60 | 60 | 60 | 60 | 1 | 1947 415 |

## 14-02-0 AUTOMATIC PILOT

| | | | | | | | | |
|---|---|---|---|---|---|---|---|---|
| 14-02-1 | AUTO. PILOT PACKAGE, except PY1 | 8 | - | 60 | 60 | 60 | 1 | 2198 087 |
| | PY1 | 8 | - | - | - | 60 | 1 | 2198 088 |
| 14-02-2 | CONTROL, except PY1 | 8 | - | 60 | 60 | 60 | 1 | 1887 792 |
| | PY1 | 8 | - | - | - | 60 | 1 | 1887 558 |
| 14-02-3 | BUTTON, Control Reset, except PY1 | 8 | - | 60 | 60 | 60 | 1 | 1972 902 |
| | PY1 | 8 | - | - | - | 60 | 1 | 1972 909 |
| 14-02-4 | KNOB, Control, except PY1 | 8 | - | 60 | 60 | 60 | 1 | 1887 798 |
| | PY1 | 8 | - | - | - | 60 | 1 | 1887 565 |
| 14-02-5 | INSULATOR and TERMINAL PACKAGE, Control | 8 | - | 60 | 60 | 60 | 1 | 1843 226 |
| 14-02-6 | ROD, except PY1 | 8 | - | 60 | 60 | 60 | 1 | *2121 936 |
| | PY1 | 8 | - | - | - | 60 | 1 | 2128 383 |
| 14-02-7 | LEVER, Accelerator Extension, except PY1 | 8 | - | 60 | 60 | 60 | 1 | 1856 297 |
| | To Accelerator Shaft | 8 | - | 60 | 60 | 60 | 1 | *2121 935 |
| 14-02-8 | COLLAR, Control Knob, PY1 | 8 | - | - | - | 60 | 1 | 1887 562 |
| 14-02-10 | NUT, Control Lighting Bracket | 8 | - | 60 | 60 | 60 | 1 | 6008 070 |
| 14-02-11 | HOUSING, Control except PY1 | 8 | - | 60 | 60 | 60 | 1 | 1971 273 |
| 14-02-12 | BALL JOINT, Auto. Pilot Rod, PY1 | 8 | - | - | - | 60 | 1 | 1617 187 |
| 14-02-14 | ADAPTER, Control Knob Mounting, PY1 | 8 | - | - | - | 60 | 1 | 1887 560 |
| 14-02-15 | MECHANISM, Drive | 8 | - | 60 | 60 | 60 | 1 | 1972 446 |
| 14-02-16 | SCREW, w/WASHER, Auto Pilot Mounting | 8 | - | 60 | 60 | 60 | 2 | 6010 019 |
| | Auto. Pilot to Fender Shield | 8 | - | 60 | 60 | 60 | 4 | 6012 028 |
| 14-02-19 | CRANK, Armature Lever | 8 | - | 60 | 60 | 60 | 1 | 1850 939 |
| 14-02-20 | RING, Control Knob, PY1 | 8 | - | - | - | 60 | 1 | 1887 564 |
| 14-02-21 | SPRING, Armature Lever | 8 | - | 60 | 60 | 60 | 1 | *2128 550 |
| 14-02-22 | LEVER, Armature, except PY1 | 8 | - | 60 | 60 | 60 | 1 | *2128 549 |
| | PY1 | 8 | - | - | - | 60 | 1 | 2128 549 |
| 14-02-23 | WASHER, Reset Button | 8 | - | 60 | 60 | 60 | 1 | 1972 906 |
| 14-02-24 | GROMMET, Control | 8 | - | 60 | 60 | 60 | 1 | 2097 816 |
| 14-02-25 | BRACKET, Brake Pedal Cutout, w/Power Brake | 8 | - | 60 | 60 | 60 | 1 | 2123 126 |
| | w/o Power Brake | 8 | - | 60 | 60 | 60 | 1 | 2123 113 |
| 14-02-26 | NUT, Brake Switch Mounting | 8 | - | 60 | 60 | 60 | 1 | 1886 313 |
| 14-02-27 | LINK, Accelerator Shaft Rod Adjusting | 8 | - | 60 | 60 | 60 | 1 | 2121 934 |
| 14-02-28 | STUD, Control Housing, except PY1 | 8 | - | - | 60 | 60 | 2 | 6010 020 |
| 14-02-29 | LAMP, Control, except PY1 | 8 | - | 60 | 60 | 60 | 1 | 2097 471 |
| | PY1 | 8 | - | - | - | 60 | 1 | 2198 194 |
| 14-02-30 | DIAL, Control, except PY1 | 8 | - | - | 60 | 60 | 1 | 1887 794 |
| 14-02-32 | SWITCH, Brake, Mechanical | 8 | - | 60 | 60 | 60 | 1 | 1885 974 |
| | Hydraulic | 8 | - | 60 | 60 | 60 | 1 | 1886 288 |
| 14-02-33 | BRACKET, Cutout Switch | 8 | - | 60 | 60 | 60 | 1 | 1850 879 |
| 14-02-34 | CABLE, Trans. to Drive Mechanism | 8 | - | 60 | 60 | 60 | 1 | 1887 908 |
| 14-02-35 | CLIP, Drive Mechanism Cable | 8 | - | 60 | 60 | 60 | 1 | 1436 940 |
| 14-02-38 | SOCKET, Lamp, PY1 | 8 | - | - | - | 60 | 1 | 1689 538 |
| | Except PY1 | 8 | - | 60 | 60 | 60 | 1 | 2097 471 |
| 14-02-39 | CONTACT, Lamp Socket | 8 | - | 60 | 60 | 60 | 1 | 657 572 |
| 14-02-40 | SLEEVE, w/NUT, Drive Mechanism | 8 | - | 60 | 60 | 60 | 1 | 1881 965 |
| 14-02-61 | SEAL, Control Lamp, PY1 | 8 | - | - | - | 60 | 1 | 6000 041 |

★ Indicates use as required. Numerals in parentheses ( ) refer to notes. Printed in U.S.A.
⊟ Indicates parts not listed in any previous parts book. Prices and specifications subject to change without notice.
* Indicates change or addition.



MyMopar.com

| CODE | PART NAME AND DESCRIPTION | NO. OF CYL. | PLYMOUTH | DODGE | DESOTO | CHRYSLER AND IMPERIAL | PER CAR | PART NUMBER |
|---|---|---|---|---|---|---|---|---|
| **14-06-0** | **ACCELERATOR PEDAL RETURN SPRING** | | | | | | | |
| 14-06-1 | SPRING, w/Std. or Auto. Trans. | 6 | 60 | 60 | - | - | 1 | *2206 204 |
| | w/Governor | 6 | 60 | 60 | - | - | 1 | ⊟2129 861 |
| | w/ or w/o Auto. Trans., PD4 | 8 | 60 | 60 | - | - | 1 | 1859 989 |
| | PD1, PD2 | 8 | - | 60 | 60 | 60 | 1 | 1856 580 |
| | High Performance | 8 | 60 | 60 | 60 | - | 1 | 1856 580 |
| | PP2, D500, PS1, PS3, PC3-300, w/Ram Manifold, use w/Return Spring Pin | 8 | 60 | 60 | 60 | 60 | 2 | 1313 193 |
| | PP2, D500, PS1, PS3, PC3-300, w/Ram Manifold, use w/Return Spring Bracket | 8 | 60 | 60 | 60 | 60 | 1 | 1320 133 |
| 14-06-10 | BRACKET, w/or w/o Auto. Trans. | 6 | 60 | 60 | - | - | 1 | 2128 776 |
| | w/or w/o Auto. Trans., PD4 | 8 | 60 | 60 | - | - | 1 | 1858 706 |
| | PD1, PD2 | 8 | - | 60 | 60 | 60 | 1 | 1827 999 |
| | PP2, PD1, PD4, PS1, High Performance | 8 | 60 | 60 | 60 | - | 1 | 1827 999 |
| | PP2, D500, PS1, PS3, PC3-300, w/Ram Manifold | 8 | 60 | 60 | 60 | 60 | 1 | 2129 668 |
| | Pin, PP2, D500, PS1, PS3, PC3-300, w/Ram Manifold | 8 | 60 | 60 | 60 | 60 | 2 | 1947 626 |
| **14-07-0** | **ACCELERATOR PEDAL TO ACCELERATOR SHAFT ROD** | | | | | | | |
| 14-07-1 | ROD, w/Std. Trans., PD4 | 6-8 | 60 | 60 | - | - | 1 | 2128 860 |
| | w/Auto. Trans., PD4 | 6-8 | 60 | 60 | - | - | 1 | 1859 396 |
| | w/Std. Trans., PP2 High Performance, PD1 | 8 | 60 | 60 | - | - | 1 | 2128 860 |
| | w/Auto. Trans., PP2, PD1, PD4, PS1, High Performance | 8 | 60 | 60 | 60 | - | 1 | 1859 396 |
| | w/Auto. Trans., PD1, PD2, PC1, PC2, PC3 | 8 | - | 60 | 60 | 60 | 1 | 1859 396 |
| | PY1 | 8 | - | - | - | 60 | 1 | 1858 576 |
| | PP2, D500, PS1, PS3, PC3-300, w/Ram Manifold | 8 | 60 | 60 | 60 | 60 | 1 | 1859 396 |
| 14-07-5 | CLIP, Pedal to Shaft Rod | 6-8 | 60 | 60 | 60 | 60 | ★ | 1137 669 |
| | RETAINER, Ball Joint | 6-8 | 60 | 60 | 60 | 60 | 1 | 1945 197 |
| 14-07-18 | BALL JOINT, PY1 | 8 | - | - | - | 60 | 1 | 1617 187 |
| **14-11-0** | **ACCELERATOR SHAFT** | | | | | | | |
| 14-11-1 | SHAFT, Bracket and Lever, w/or w/o Auto. Trans. | 6 | 60 | 60 | - | - | 1 | 2128 495 |
| | w/BRACKET, w/Governor | 6 | 60 | 60 | - | - | 1 | ⊟2129 849 |
| | w/BRACKET and LEVER, w/or w/o Auto. Trans., except PY1 | 8 | 60 | 60 | 60 | 60 | 1 | 2121 467 |
| | w/o Bracket, w/o Auto Pilot, PY1 | 8 | - | - | - | 60 | 1 | 1858 892 |
| | w/o Bracket, w/Auto. Pilot, PY1 | 8 | - | - | - | 60 | 1 | 1859 991 |
| | w/BRACKET, w/PowerFlite and Auto. Pilot, PS1 | 8 | - | - | 60 | - | 1 | 2121 915 |
| | w/BRACKET and LEVER w/Ram Manifold, PP2, D500, PS1, PS3, PC3-300 | 8 | 60 | 60 | 60 | 60 | 1 | 2121 748 |
| 14-11-3 | CLIP, Bell Crank to Throttle Torque Shaft | 6 | 60 | 60 | - | - | 1 | 2120 877 |
| 14-11-9 | ROD, Bell Crank to Throttle Torque Shaft | 6 | 60 | 60 | - | - | 1 | 2128 503 |
| | Bell Crank to Throttle Torque Shaft, w/Governor | 6 | 60 | 60 | - | - | 1 | ⊟2129 855 |
| | Bell Crank to Trans. | 6 | 60 | 60 | - | - | 1 | 2128 505 |
| | Accelerator Shaft to Carburetor, w/or w/o Auto. Trans., w/STUD, except PY1 | 8 | 60 | 60 | 60 | 60 | 1 | 2120 968 |
| | Shaft to Carburetor, w/or w/o Auto. Trans., w/SLOT, except PY1 | 8 | 60 | 60 | 60 | 60 | 1 | 2120 980 |
| | Shaft to Carburetor, w/STUD, PY1 | 8 | - | - | - | 60 | 1 | 1859 996 |
| | Shaft to Carburetor, w/SLOT, PY1 | 8 | - | - | - | 60 | 1 | 1859 995 |
| | Shaft to Throttle Shaft Bell Crank, PP2, D500, PS1, PS3, PC3-300, w/Ram Manifold | 8 | 60 | 60 | 60 | 60 | 1 | 2121 159 |
| | Bell Crank to Carburetor, PP2, D500, PS1, PS3, PC3-300, w/Ram Manifold, Right | 8 | 60 | 60 | 60 | 60 | 2 | 2128 757 |
| | Shaft to Trans., w/PowerFlite, PD1, PD4, PS1 | 8 | 60 | 60 | 60 | - | 1 | 1859 868 |
| | Shaft to Trans., w/Auto. Trans., except PY1 | 8 | 60 | 60 | 60 | 60 | 1 | ⊟2202 790 |
| | Shaft to Trans., PY1 | 8 | - | - | - | 60 | 1 | 1947 861 |
| 14-11-14 | SWIVEL, Shaft to Accelerator Pedal Rod, w/Std. Trans., PD4 | 6-8 | 60 | 60 | - | - | 1 | 1947 376 |
| | w/Std. Trans., PP2 High Performance, PD1, PD2 | 8 | 60 | 60 | - | - | 1 | 1947 376 |


MyMopar.com

| CODE | PART NAME AND DESCRIPTION | NO. OF CYL. | PLYMOUTH | DODGE | DESOTO | CHRYSLER AND IMPERIAL | PER CAR | PART NUMBER |
|---|---|---|---|---|---|---|---|---|
| **14-11-0** | **ACCELERATOR SHAFT - Cont'd** | | | | | | | |
| 14-11-18 | LINK, Shaft to Trans. Rod Adjusting, except PY1 | 8 | 60 | 60 | 60 | 60 | 1 | ⊟2129 611 |
| | Bell Crank to Trans. | 6 | 60 | 60 | - | - | 1 | ⊟2202 428 |
| | Throttle Control Rod, PY1 | 8 | - | - | - | 60 | 1 | 1945 163 |
| 14-11-19 | CLIP, Bell Crank to Auto. Trans. Rod | 6 | 60 | 60 | - | - | 1 | 667 774 |
| 14-11-20 | BRACKET, Shaft, PY1 | 8 | - | - | - | 60 | 1 | 1734 030 |
| 14-11-23 | SCREW, Shaft Bracket Tapping, except PY1 | 6-8 | 60 | 60 | 60 | 60 | ★ | 1947 301 |
| 14-11-25 | PLATE, Shaft Bracket Stud Retainer, PY1 | 8 | - | - | - | 60 | 1 | 1734 028 |
| 14-11-28 | LEVER, Shaft, PY1 | 8 | - | - | - | 60 | 1 | 1859 994 |
| | Throttle Torque Shaft | 6 | 60 | 60 | - | - | 1 | 2128 777 |
| 14-11-29 | BUSHING, Shaft Lever | 8 | 60 | 60 | 60 | 60 | 1 | 1859 768 |
| 14-11-30 | INSULATOR, Shaft Lever | 8 | 60 | 60 | 60 | 60 | 1 | 1859 767 |
| | Torque Shaft | 6 | 60 | 60 | - | - | 1 | 2128 347 |
| | Shaft Bracket | 6 | 60 | 60 | - | - | 1 | ⊟2203 349 |
| 14-11-33 | BUSHING, Shaft Bracket | 6 | 60 | 60 | - | - | 1 | 2128 475 |
| 14-11-38 | SHAFT, Throttle Torque | 6 | 60 | 60 | - | - | 1 | 2128 500 |
| 14-11-48 | SEAL, Shaft Bracket, PY1 | 8 | - | - | - | 60 | 1 | 1827 773 |
| **14-13-0** | **THROTTLE LINKAGE BALL JOINT OR BALL STUD** | | | | | | | |
| 14-13-1 | BALL STUD, Throttle Control Bell Crank | 6 | 60 | 60 | - | - | 1 | 1858 936 |
| | Accelerator Shaft to Trans. Rod | 6 | 60 | 60 | - | - | 1 | 1859 868 |
| | Accelerator Shaft Double Ball, except PY1 | 6-8 | 60 | 60 | 60 | 60 | 1 | 1859 779 |
| | Accelerator Shaft, Single Ball, except PY1 | 6-8 | 60 | 60 | 60 | 60 | 1 | 1859 991 |
| | Carburetor Lever | 6-8 | 60 | 60 | 60 | 60 | 1 | 1858 936 |
| | Accelerator Pedal Lever | 6-8 | 60 | 60 | 60 | 60 | 1 | 2128 636 |
| | Intake Manifold Throttle Shaft Lever, w/Ram Manifold | 8 | 60 | 60 | 60 | 60 | 1 | 1858 936 |
| 14-13-3 | CLIP, Ball Stud Retainer | 8 | 60 | 60 | 60 | 60 | ★ | 2121 571 |
| | | 8 | 60 | 60 | 60 | 60 | ★ | 2121 572 |
| 14-13-5 | RETAINER, Ball Stud, Threaded | 6-8 | 60 | 60 | 60 | 60 | ★ | 1945 197 |
| | Snap on Type | 6-8 | 60 | 60 | 60 | 60 | ★ | 2121 571 |
| | Accelerator Pedal to Shaft Rod | 6-8 | 60 | 60 | 60 | 60 | ★ | 1672 616 |
| **14-14-0** | **THROTTLE CONTROL BELL CRANK** | | | | | | | |
| 14-14-3 | SHAFT, Intake Manifold Throttle, w/Ram Manifold | 8 | 60 | 60 | 60 | 60 | 1 | 2121 745 |
| 14-14-5 | CLIP, Bell Crank to Carburetor Rod, w/Ram Manifold | 8 | 60 | 60 | 60 | 60 | 2 | 667 774 |
| 14-14-47 | BUSHING, Intake Manifold Throttle Shaft, w/Ram Manifold | 8 | 60 | 60 | 60 | 60 | 2 | 1947 542 |
| 14-14-48 | LEVER, Intake Manifold Throttle Shaft, w/Ram Manifold | 8 | 60 | 60 | 60 | 60 | 1 | 1947 544 |
| **14-29-0** | **CARBURETOR AIR CLEANER** | | | | | | | |
| 14-29-2 | AIR CLEANER, Dry Type | 6 | 60 | 60 | - | - | 1 | 1947 726 |
| | Oil Bath Type | 6 | 60 | 60 | - | - | 1 | 2128 805 |
| | w/Governor | 6 | 60 | 60 | - | - | 1 | 1859 750 |
| | Oil Bath Type, PP2, PD4, also specify 1-2128660 Adapter, 1-2128661 Gasket, 1-117204 Nut | 8 | 60 | 60 | - | - | 1 | ⊟2129 384 |
| | w/o Air Cond., w/2 Barrel Carburetor PP2, PD4 | 8 | 60 | 60 | - | - | 1 | 1859 435 |
| | w/o Air Cond., w/4 Barrel Carburetor PP2 | 8 | 60 | - | - | - | 1 | 1859 457 |
| | w/2 Barrel Carburetor, Oil Bath Type, PD4, Export | 8 | 60 | 60 | - | - | 1 | 2129 383 |
| | w/4 Barrel Carburetor, High Performance | 8 | 60 | - | - | - | 1 | 1947 364 |
| | w/2 Barrel Carburetor PD1, PD2 | 8 | - | 60 | 60 | - | 1 | 1945 543 |
| | w/4 Barrel Carburetor, PS1, PS3, High Performance | 8 | - | - | 60 | - | 1 | 1851 491 |
| | w/4 Barrel Carburetor, High Performance | 8 | - | 60 | - | - | 1 | 2120 471 |
| | w/2 Barrel Carburetor, PC1 | 8 | - | - | - | 60 | 1 | 1859 527 |
| | w/4 Barrel Carburetor, PC2, PC3, PY1 | 8 | - | - | - | 60 | 1 | 1945 543 |
| | w/2 - 4 Barrel Carburetors | 8 | 60 | 60 | 60 | 60 | 2 | 2120 633 |

★ Indicates use as required. Numerals in parentheses ( ) refer to notes. Printed in U.S.A.
⊟ Indicates parts not listed in any previous parts book. Prices and specifications subject to change without notice.
* Indicates change or addition.



MyMopar.com

## 14-29-0 CARBURETOR AIR CLEANER - Cont'd

| CODE | PART NAME AND DESCRIPTION | NO. OF CYL. | PLYMOUTH | DODGE | DESOTO | CHRYSLER AND IMPERIAL | PER CAR | PART NUMBER |
|---|---|---|---|---|---|---|---|---|
| 14-29-3 | GASKET, Oil Chamber, w/Oil Bath Cleaner, PD4 | 6-8 | 60 | 60 | - | - | 1 | 1821 144 |
| 14-29-4 | GASKET, Cover, w/Dry Type Cleaner | 6 | 60 | - | - | - | 1 | 1945 561 |
| 14-29-5 | GASKET, Mounting | 6 | 60 | 60 | - | - | 1 | 1947 797 |
| | w/2 Barrel Carburetor, PD4-L, PD4-M | 8 | 60 | 60 | - | - | 1 | 1326 847 |
| | w/4 Barrel Carburetor, PD4-H | 8 | 60 | 60 | - | - | 1 | 1821 170 |
| | w/4 Barrel Carburetor, High Performance | 8 | - | 60 | - | - | 1 | 2120 472 |
| | w/2-4 Barrel Carburetors | 8 | 60 | 60 | 60 | 60 | 2 | 1821 170 |
| | | 8 | - | - | 60 | 60 | 1 | 1821 170 |
| 14-29-6 | FILTER, Dry Type | 6 | 60 | 60 | - | - | 1 | 1739 548 |
| | PD4 | 8 | 60 | 60 | - | - | 1 | *1739 547 |
| | w/2 Barrel Carburetor, PD1, PD2 | 8 | - | 60 | 60 | - | 1 | 1946 923 |
| | w/4 Barrel Carburetor | 8 | 60 | - | - | - | 1 | 1851 493 |
| | w/4 Barrel Carburetor | 8 | - | 60 | 60 | 60 | 1 | 1946 923 |
| | w/2 - 4 Barrel Carburetors | 8 | 60 | 60 | 60 | 60 | 2 | 2120 634 |
| 14-29-10 | ADAPTER, Air Cleaner to Carburetor, w/Governor | 6 | 60 | 60 | - | - | 1 | 2129 000 |
| | w/Oil Bath Cleaner, PD4 | 8 | 60 | 60 | - | - | 1 | 2128 660 |
| 14-29-12 | BRACKET, Steady, w/Governor | 6 | 60 | 60 | - | - | 1 | 2129 562 |
| 14-29-15 | CLAMP, w/Dry Type Air Cleaner | 6 | 60 | 60 | - | - | 1 | 2129 597 |
| | w/Oil Bath Air Cleaner | 6 | 60 | 60 | - | - | 1 | 1947 798 |
| 14-29-33 | STUD to Carburetor | 8 | 60 | 60 | 60 | 60 | ★ | 1826 286 |
| | Use w/2120 471 Cleaner | 8 | - | 60 | - | - | 1 | ⊟2120 777 |
| 14-29-44 | SPACER, Steady Bracket | 6 | 60 | 60 | - | - | 1 | ⊟2129 856 |

## 14-30-0 CARBURETOR

14-30-1 CARBURETOR ASSEMBLIES

| MODEL | USE WITH TRANSMISSION | CARBURETOR STAMPED | PART NUMBER |
|---|---|---|---|
| PP1 | ALL | 2985S | 2121 505 |
| PP1 Taxi, w/o Governor | STANDARD | 3053S | 2129 177 |
| PP1 Taxi, w/Governor | STANDARD | 2985S | 2121 505 |
| PP2, w/318 cu. in. Eng., 2 Barrel, w/or w/o Air Cond., Det. and Valley Park Built | ALL | 2921S | 2120 048 |
| PP2, w/318 cu. in. Eng., 2 Barrel, w/or w/o Air Cond., Newark and L.A. Built | ALL | WW15-41 | 2120 064 |
| PP2, w/318 cu. in. Eng., 2 Barrel | OVERDRIVE | 2921S | 2120 048 |
| PP2, w/318 cu. in. Eng., 4 Barrel | AUTOMATIC | 2925S | 2120 052 |
| PP2 High Performance, w/361 cu. in. Eng., 4 Barrel | ALL | 2969S | 2121 209 |
| PP2, w/361 cu. in. Eng. and Ram Manifold, 2-4 Barrel | AUTOMATIC | 2903S | 1947 809 |
| PD3 | ALL | 2985S | 2121 505 |
| PD3 Taxi | STANDARD | 3053S | 2129 177 |
| PD1, w/361 cu. in. Eng., 2 Barrel | ALL | 3-188 | 1947 841 |
| PD2, w/383 cu. in. Eng., 4 Barrel | AUTOMATIC | R1971A | 2120 469 |
| PD4-L, PD4-M, w/318 cu. in. Eng., 2 Barrel, Valley Park Built | ALL | 2921S | 2120 048 |
| PD4-L, PD4-M, w/318 cu. in. Eng., 2 Barrel, except Valley Park Built | ALL | WW15-41 | 2120 064 |



MyMopar.com

## 14-30-0 CARBURETOR - Cont'd

14-30-1 CARBURETOR ASSEMBLIES - Cont'd

| MODEL | USE WITH TRANSMISSION | CARBURETOR STAMPED | PART NUMBER |
|---|---|---|---|
| PD4-L, PD4-M, w/318 cu. in. Eng., 2 Barrel | OVERDRIVE | 2921S | 2120 048 |
| PD4-H, w/318 cu. in. Eng., 4 Barrel | AUTOMATIC | 2991S | 2121 728 |
| PD4-H, w/318 cu. in. Eng., 4 Barrel | STANDARD | 2948S | 2120 738 |
| PD1, PD4, High Performance, PD2, w/383 cu. in. Eng., 4 Barrel | ALL | R2052A | *2128 413 |
| PD1, PD2, PD4, w/383 cu. in. Eng. and Ram Manifold, 2 - 4 Barrel | AUTOMATIC | 2903S | 1947 809 |
| PS1, w/361 cu. in. Eng., 2 Barrel | AUTOMATIC | 2924S | ⊟2120 050 |
| PS1 High Performance, w/383 cu. in. Eng., 4 Barrel | AUTOMATIC | 2950S | 2120 740 |
| PS1, PS3, High Performance, w/383 cu. in. Eng., 4 Barrel | AUTOMATIC | 2968S | ⊟2121 208 |
| PS3, w/383 cu. in. Eng., 2 Barrel | AUTOMATIC | 2924S | ⊟2120 050 |
| PS3, w/383 cu. in. Eng., 4 Barrel | AUTOMATIC | 2950S | 2120 740 |
| PS1, PS3, w/383 cu. in. Eng. and Ram Manifold, 2 - 4 Barrel | AUTOMATIC | 2903S | 1947 809 |
| PC1, w/383 cu. in. Eng., 2 Barrel | AUTOMATIC | 2924S | ⊟2120 050 |
| PC2, w/383 cu. in. Eng., 4 Barrel | AUTOMATIC | 2927S | 2120 054 |
| PC3, PY1, w/413 cu. in. Eng., 4 Barrel | AUTOMATIC | 2927S | *2120 054 |
| PC3-300, w/413 cu. in. Eng. and Ram Manifold, 2 - 4 Barrel | AUTOMATIC | 2903S | 1947 809 |

NOTE: The Carburetor assemblies listed below are production numbers and are not used for service. For components used for service see chart on the following pages.

| | | | |
|---|---|---|---|
| PP1, PD3 | AUTOMATIC | 2986S | *2121 506 |
| PP2, w/318 cu. in. Eng., 2 Barrel, w/ or w/o Air Cond., Det. and Valley Park Blt. | AUTOMATIC | 2922S | *2120 049 |
| PP2, w/318 cu. in. Eng., 2 Barrel, w/ or w/o Air Cond., Newark and L. A. Blt. | AUTOMATIC | WW15-42 | *2120 065 |
| PS1, w/361 cu. in. Eng., 2 Barrel | AUTOMATIC | 2924S | *2120 051 |
| PS3, PC1, w/383 cu. in. Eng., 2 Barrel | AUTOMATIC | 2924S | *2120 051 |
| PD4-L, PD4-M, w/318 cu. in. Eng., 2 Barrel, except Valley Park Blt. | AUTOMATIC | WW15-42 | *2120 065 |
| PD1, PD4, High Performance, PD2, w/383 cu. in. Eng., 4 Barrel | AUTOMATIC | R1971A | *2120 469 |



MyMopar.com

## 14-30-0 CARBURETOR - Cont'd

NOTE: Read Across. Continued on Facing Page.

Carburetor Service Chart - For Model Application See Part Type Code 14-30-1

| Chrysler No. | Stamped | Flange Gasket 14-30-2 | Repair Pkg. 14-30-4 | Gasket Pkg. 14-30-7 | Float Needle w/Seat 14-30-8 | Fuel Inlet Strainer 14-30-27 |
|---|---|---|---|---|---|---|
| 1947 809 | 2903S | 1947 810 | 2084 196 | 2084 200 | 1826 844 | 1826 864 |
| ---- --- | ---- --- | ---- --- | ---- --- | ---- --- | ---- --- | ---- --- |
| 1947 841 | 3-188 | 1822 051 | 2084 725 | 2084 728 | 2084 732 | ---- --- |
| 2120 048 | 2921S | 1634 701 | 2084 164 | 1826 511 | ⊟2240 410 | ---- --- |
| 2120 049 | 2922S | 1634 701 | 2084 164 | 1826 511 | 1533 777 | ---- --- |
| 2120 050 | 2923S | 1822 051 | 2084 188 | 2084 192 | 1826 833 | ---- --- |
| 2120 051 | 2924S | 1822 051 | 2196 213 | 2084 192 | 1826 833 | ---- --- |
| 2120 052 | 2925S | 2121 953 | 2084 187 | 2196 211 | 1826 834 | 1826 864 |
| ---- --- | ---- --- | ---- --- | ---- --- | ---- --- | ---- --- | ---- --- |
| 2120 054 | 2927S | 2121 954 | 2084 189 | 2196 212 | 1826 834 | 1826 864 |
| ---- --- | ---- --- | ---- --- | ---- --- | ---- --- | ---- --- | ---- --- |
| 2120 055 | 2928S | 1947 810 | ---- --- | ---- --- | ---- --- | ---- --- |
| 2120 056 | 2929S | 1947 810 | ---- --- | ---- --- | ---- --- | ---- --- |
| 2120 064 | WW15-41 | 1634 701 | 2084 726 | 1631 368 | 2196 204 | ---- --- |
| 2120 065 | WW15-42 | 1634 701 | 2084 727 | 1631 368 | 2196 204 | ---- --- |
| 2120 469 | R1971A | 2121 954 | 2084 710 | 2084 711 | 2084 713 | ---- --- |
| 2120 738 | 2948S | 1852 586 | 2084 178 | 1826 561 | 2196 207 | 1826 864 |
| ---- --- | ---- --- | ---- --- | ---- --- | ---- --- | ---- --- | ---- --- |
| 2120 740 | 2950S | 2121 954 | 2084 190 | 2196 212 | 1826 834 | 1826 864 |
| ---- --- | ---- --- | ---- --- | ---- --- | ---- --- | ---- --- | ---- --- |
| 2121 209 | 2969S | 2121 952 | 2084 176 | ⊟2196 209 | ⊟2196 207 | *1826 864 |
| ---- --- | ---- --- | ---- --- | ---- --- | ---- --- | ---- --- | ---- --- |
| 2121 210 | 2970S | 2121 952 | 2084 177 | 1826 552 | 1826 834 | 1826 864 |
| ---- --- | ---- --- | ---- --- | ---- --- | ---- --- | ---- --- | ---- --- |
| 2121 211 | 2971S | 1822 051 | ---- --- | ---- --- | ---- --- | ---- --- |
| 2121 504 | 2983S | 1634 701 | 2084 164 | 1826 511 | 1533 777 | ---- --- |
| 2121 505 | 2985S | 1630 472 | 2196 219 | 2196 222 | *2240 401 | ---- --- |
| 2121 506 | 2986S | 1630 472 | 2196 219 | 2196 222 | 690 676 | ---- --- |
| 2121 728 | 2991S | 2121 953 | 2084 199 | 2196 211 | 1826 834 | 1826 864 |
| ---- --- | ---- --- | ---- --- | ---- --- | ---- --- | ---- --- | ---- --- |
| 2128 413 | R2052A | 1858 720 | 2196 206 | 2084 711 | 2084 713 | ---- --- |
| 2129 177 | 3053S | 1630 472 | 2196 246 | 2196 221 | 2240 401 | ---- --- |

NOTE: For Carburetor Zip Kits see Part Type Code 14-30-11 on the following page.



MyMopar.com

Carburetor Service Chart - For Model Application See Part Type Code 14-30-1

| Fuel Strainer Nut 14-30-28 | Main Metering Jet 14-35-1 | Power By-Pass Jet 14-35-6 | Main Dis-Charge Jet 14-35-8 | Carb. Choke 14-39-45 | Pump Plunger w/Rod 14-41-3 | Step-Up Rod 14-43-5 |
|---|---|---|---|---|---|---|
| 1826 863 | †1400 857 | ---- --- | ---- --- | 1947 811 | 2196 208 | 2084 184 |
| ---- --- | ‡1610 759 | ---- --- | ---- --- | ---- --- | ---- --- | ---- --- |
| ---- --- | 2084 729 | 2084 731 | ---- --- | 1947 842 | 2084 730 | ---- --- |
| ---- --- | 1618 220 | ---- --- | ---- --- | 1737 780 | 2084 163 | 1826 886 |
| ---- --- | 1618 220 | ---- --- | ---- --- | 1737 780 | 2084 163 | 1826 843 |
| ---- --- | 2196 203 | ---- --- | ---- --- | 1858 523 | 1826 607 | 2084 182 |
| ---- --- | 2084 181 | ---- --- | ---- --- | 1858 523 | 1826 607 | 2084 182 |
| 1826 863 | †1400 857 | ---- --- | ---- --- | 2121 955 | 1826 369 | 2084 194 |
| ---- --- | ‡1610 759 | ---- --- | ---- --- | ---- --- | ---- --- | ---- --- |
| 1826 863 | †1400 857 | ---- --- | ---- --- | 2121 957 | 1826 369 | 2084 165 |
| ---- --- | ‡2084 166 | ---- --- | ---- --- | ---- --- | ---- --- | ---- --- |
| ---- --- | ---- --- | ---- --- | ---- --- | 1947 811 | ---- --- | ---- --- |
| ---- --- | ---- --- | ---- --- | ---- --- | 1947 811 | ---- --- | ---- --- |
| ---- --- | 1618 176 | 869 577 | 1631 353 | 1852 020 | 2084 733 | ---- --- |
| ---- --- | 1553 086 | 1631 338 | 1631 353 | 1852 020 | 2084 733 | ---- --- |
| ---- --- | 2084 714 | 2084 715 | ---- --- | 2120 470 | 2196 234 | ---- --- |
| 1826 863 | †1400 857 | ---- --- | ---- --- | 1947 359 | 1826 369 | 1826 875 |
| ---- --- | ‡2084 166 | ---- --- | ---- --- | ---- --- | ---- --- | ---- --- |
| 1826 863 | †1400 857 | ---- --- | ---- --- | 2121 957 | 1826 369 | 1826 840 |
| ---- --- | ‡2084 166 | ---- --- | ---- --- | ---- --- | ---- --- | ---- --- |
| 1826 863 | †1400 857 | ---- --- | ---- --- | 2121 956 | 1826 369 | 2084 165 |
| ---- --- | ‡1676 692 | ---- --- | ---- --- | ---- --- | ---- --- | ---- --- |
| 1826 863 | †1400 857 | ---- --- | ---- --- | 2121 956 | 1826 369 | 2084 179 |
| ---- --- | ‡1676 692 | ---- --- | ---- --- | ---- --- | ---- --- | ---- --- |
| ---- --- | ---- --- | ---- --- | ---- --- | 1858 523 | ---- --- | ---- --- |
| ---- --- | 1618 220 | ---- --- | ---- --- | 1737 780 | ---- --- | 1826 886 |
| ---- --- | 1610 881 | ---- --- | ---- --- | 1947 765 | 2196 214 | ⊟2240 403 |
| ---- --- | ---- --- | ---- --- | ---- --- | 1947 765 | 2196 214 | ⊟2240 439 |
| 1826 863 | 1400 857 | ---- --- | ---- --- | 2121 955 | 1826 369 | 2084 194 |
| ---- --- | 1610 759 | ---- --- | ---- --- | ---- --- | ---- --- | ---- --- |
| ---- --- | 2196 205 | 2084 715 | ---- --- | 2120 470 | ---- --- | ---- --- |
| ---- --- | 1618 157 | ---- --- | ---- --- | 1947 765 | 2196 214 | *1631 502 |

NOTE: † Primary ‡ Secondary

★ Indicates use as required. Numerals in parentheses ( ) refer to notes. Printed in U.S.A.
⊟ Indicates parts not listed in any previous parts book. Prices and specifications subject to change without notice.
* Indicates change or addition.



MyMopar.com

Dec. 9, 1960 Supersedes April 20, 1960.

| CODE | PART NAME AND DESCRIPTION | NO. OF CYL. | PLYMOUTH | DODGE | DESOTO | CHRYSLER AND IMPERIAL | PER CAR | PART NUMBER |
|---|---|---|---|---|---|---|---|---|
| **14-30-0 CARBURETOR - Cont'd** | | | | | | | | |
| 14-30-11 | ZIP KIT, Carburetor, use w/Carburetor Stamped 2985S, 2986S | 6 | 60 | 60 | - | - | 1 | 2196 233 |
| | Use w/Carburetor Stamped 2921S, 2922S | 8 | 60 | 60 | - | - | 1 | 2196 232 |
| | Use w/Carburetor Stamped 2991S | 8 | - | 60 | - | - | 1 | 2196 230 |
| | Use w/Carburetor Stamped 2924S | 8 | - | - | 60 | - | 1 | 2196 226 |
| | Use w/Carburetor Stamped 2950S | 8 | - | - | 60 | - | 1 | 2196 227 |
| | Use w/Carburetor Stamped 2924S | 8 | - | - | - | 60 | 1 | 2196 226 |
| | Use w/Carburetor Stamped 2927S | 8 | - | - | - | 60 | 1 | 2196 227 |
| | Use w/Carburetor Stamped 2927S, PY1 | 8 | - | - | - | 60 | 1 | 2196 227 |
| **14-39-0 CARBURETOR CHOKE ATTACHING PARTS** | | | | | | | | |
| 14-39-46 | GASKET, Choke Well, w/Ram Manifold | 8 | 60 | 60 | 60 | 60 | 1 | 1947 731 |
| 14-39-48 | CUP, Choke Well, w/Ram Manifold | 8 | 60 | 60 | 60 | 60 | 1 | 1947 729 |
| 14-39-49 | RETAINER, Choke Well, w/Ram Manifold | 8 | 60 | 60 | 60 | 60 | 1 | 1947 730 |
| **14-50-0 CARBURETOR ANTI-STALL DIAPHRAGM** | | | | | | | | |
| 14-50-25 | DIAPHRAGM, w/Ram Manifold | 8 | 60 | 60 | 60 | 60 | 1 | 2128 762 |
| 14-50-39 | TUBING, Diaphragm, 25 ft. rolls, 3/16" dia. | 8 | 60 | 60 | 60 | 60 | ★ | *1843 251 |
| | CONNECTOR | 8 | 60 | 60 | 60 | 60 | ★ | 431 537 |
| | NUT | 8 | 60 | 60 | 60 | 60 | ★ | 137 396 |
| **14-65-0 AUTOMATIC CHOKE TO CARBURETOR ROD CLIP** | | | | | | | | |
| 14-65-4 | CLIP, Stamped D-L | 8 | 60 | 60 | 60 | 60 | ★ | 1639 182 |
| | Stamped D-R | 8 | 60 | 60 | 60 | 60 | ★ | 1738 635 |
| **14-67-0 FUEL FILTER** | | | | | | | | |
| 14-67-1 | FILTER, Sealed Type | 8 | 60 | 60 | 60 | 60 | 1 | 2084 258 |
| 14-67-2 | HOSE, Filter to Carburetor | 8 | 60 | 60 | 60 | 60 | 2 | *1739 230 |
| 14-67-10 | FILTER and HOSE PACKAGE, use on Cars w/o Factory Installed Fuel Filters | 6-8 | 60 | 60 | 60 | 60 | 1 | ⊟2084 467 |
| 14-67-26 | CLAMP, Filter to Carburetor Hose | 8 | 60 | 60 | 60 | 60 | 4 | * 274 461 |
| | Right Carburetor to Left Carburetor | 8 | 60 | 60 | 60 | 60 | 1 | 581 523 |
| **14-72-0 FUEL TANK GAUGE** | | | | | | | | |
| 14-72-1 | GAUGE, w/20 Gallon Tank, except Sub. | 6-8 | 60 | 60 | - | - | 1 | 2084 062 |
| | w/23 Gallon Tank, except Sub. | 6-8 | 60 | - | 60 | 60 | 1 | 2084 063 |
| | Sub. | 6-8 | 60 | 60 | - | 60 | 1 | 2084 272 |
| 14-72-6 | GROMMET, Cable | 6-8 | 60 | 60 | 60 | 60 | 1 | 1842 997 |
| 14-72-9 | SEAL | 6-8 | 60 | 60 | 60 | 60 | 1 | 1948 757 |
| 14-72-32 | INSULATOR PACKAGE, Gauge Wire | 6-8 | 60 | 60 | 60 | 60 | 1 | 1843 226 |
| | TERMINAL PACKAGE, Gauge Wire | 6-8 | 60 | 60 | 60 | 60 | 1 | 1843 227 |
| 14-72-47 | RETAINER, Gauge | 6-8 | 60 | 60 | 60 | 60 | 1 | 1730 095 |
| **14-73-0 FUEL PUMP** | | | | | | | | |
| 14-73-1 | PUMP PACKAGE, Also Taxi | 6 | 60 | 60 | - | - | 1 | 2084 859 |
| | w/o Air Cond., PD4 | 8 | 60 | 60 | - | - | 1 | 1843 287 |
| | w/Air Cond., PD4 | 8 | 60 | 60 | - | - | 1 | 1843 400 |
| | PD1, PD2 | 8 | - | 60 | 60 | 60 | 1 | 1879 296 |
| | PP2, PD1, PD4, PS1, PS3, High Performance | 8 | 60 | 60 | 60 | - | 1 | 1879 296 |
| | w/Ram Manifold | 8 | 60 | 60 | 60 | 60 | 1 | 1879 296 |
| **14-74-0 FUEL PUMP MOUNTING** | | | | | | | | |
| 14-74-1 | GASKET | 6-8 | 60 | 60 | 60 | 60 | 1 | 1400 185 |
| 14-74-2 | SCREW, PD4 | 8 | 60 | 60 | - | - | 1 | 1851 586 |
| **14-77-0 FUEL PUMP PUSH ROD** | | | | | | | | |
| 14-77-17 | ROD, PP2, PD4, High Performance, PD1, PD2 | 8 | 60 | 60 | 60 | 60 | 1 | 1737 745 |



MyMopar.com

| CODE | PART NAME AND DESCRIPTION | NO. OF CYL. | PLYMOUTH | DODGE | DESOTO | CHRYSLER AND IMPERIAL | PER CAR | PART NUMBER |
|---|---|---|---|---|---|---|---|---|
| **14-86-0** | **FUEL TANK** | | | | | | | |
| 14-86-1 | TANK, w/Filler TUBE, 20 Gallon, except Sub. | 6-8 | 60 | - | - | - | 1 | 2123 620 |
| | w/Filler TUBE, 20 Gallon, except Sub. | 6-8 | - | 60 | - | - | 1 | 2123 621 |
| | w/Filler TUBE, 23 Gallon, except Sub. | 6-8 | 60 | - | - | - | 1 | 2123 622 |
| | w/Filler TUBE, 23 Gallon, except Sub., PC1, PC2, PC3 | 8 | - | - | 60 | 60 | 1 | 2123 622 |
| | w/o Filler Tube, PY1 | 8 | - | - | - | 60 | 1 | 2123 623 |
| | w/o Filler Tube, 22 Gallon, Sub. | 6-8 | 60 | 60 | - | 60 | 1 | 1944 200 |
| 14-86-13 | PLUG, Drain | 6-8 | 60 | 60 | 60 | 60 | 1 | 1739 194 |
| 14-86-24 | SEAL, Drain Plug | 6-8 | 60 | 60 | 60 | 60 | 1 | 1739 196 |
| 14-86-35 | CAP, Filler Tube, except | 6-8 | 60 | 60 | 60 | 60 | 1 | 1948 749 |
| | CAP PACKAGE, Filler Tube, Sub. | 6-8 | 60 | 60 | - | 60 | 1 | 2240 235 |
| 14-86-40 | TUBE, Filler, Sub. | 6-8 | 60 | - | - | - | 1 | 1944 204 |
| | Sub. | 6-8 | - | 60 | - | - | 1 | 1944 206 |
| | Sub. | 8 | - | - | - | 60 | 1 | 1944 208 |
| | PY1 | 8 | - | - | - | 60 | 1 | 1948 734 |
| 14-86-55 | GROMMET, Filler Tube, PY1 | 8 | - | - | - | 60 | 1 | 1948 741 |
| 14-86-57 | HOSE, Vent Tube, except Sub. | 6-8 | 60 | 60 | 60 | 60 | ★ | 1828 456 |
| 14-86-58 | CLIP, Flange Vent Tube, except Sub. (C.S.) | 6-8 | 60 | 60 | 60 | 60 | 5 | 2123 640 |
| 14-86-83 | "O" RING, Filler Tube Sleeve, Sub. and PY1 | 6-8 | 60 | 60 | - | 60 | 1 | 1730 087 |
| 14-86-85 | FILTER, Inside of Tank | 6-8 | 60 | 60 | 60 | 60 | 1 | 1670 694 |
| **14-87-0** | **FUEL TANK DUST SHIELD OR STONE DEFLECTOR** | | | | | | | |
| 14-87-2 | DEFLECTOR, Wheel Housing Fuel Tank Stone, Sub. | 6-8 | 60 | 60 | - | 60 | 1 | 1961 353 |
| **14-88-0** | **FUEL TANK SUPPORT** | | | | | | | |
| 14-88-21 | STRAP, w/20 Gallon Tank, except Sub. | 6-8 | 60 | 60 | - | - | 2 | ⊟1944 174 |
| | w/23 Gallon Tank, except Sub. and PY1 | 6-8 | 60 | - | 60 | 60 | 2 | ⊟1944 194 |
| | PY1 | 8 | - | - | - | 60 | 2 | ⊟1944 177 |
| | Sub. | 6-8 | 60 | 60 | - | 60 | 1 | ⊟1944 203 |
| 14-88-27 | STUD, Support Strap, except Sub. and PY1 | 6-8 | 60 | 60 | 60 | 60 | 2 | 1944 171 |
| | PY1 | 8 | - | - | - | 60 | 2 | 1671 610 |
| | SCREW, w/WASHER, Sub. | 6-8 | 60 | 60 | - | 60 | 1 | 6012 073 |
| **14-89-0** | **FUEL LINE TUBE** | | | | | | | |
| 14-89-2 | TUBING, 25 Ft. Rolls, 5/16" O.D. | 6-8 | 60 | 60 | 60 | 60 | ★ | 1843 253 |
| 14-89-57 | HOSE, Fuel Pump to Fuel Filter | 8 | 60 | 60 | 60 | 60 | ★ | 1739 230 |
| | Front Tube to Rear Tube | 6-8 | 60 | 60 | 60 | 60 | ★ | 1739 230 |
| | Tube, to Fuel Tank | 6-8 | 60 | 60 | 60 | 60 | ★ | 1739 230 |
| | Tube to Fuel Pump | 6 | 60 | 60 | - | - | 1 | 2200 963 |
| | CLAMP | 6-8 | 60 | 60 | 60 | 60 | ★ | 274 461 |
| **14-90-0** | **FUEL LINE TUBE CLIP** | | | | | | | |
| 14-90-1 | CLIP, except PY1 | 6-8 | 60 | 60 | 60 | 60 | ★ | 2123 341 |
| | PY1 | 8 | - | - | - | 60 | ★ | 1119 423 |
| | | 6-8 | 60 | 60 | 60 | 60 | ★ | 1263 079 |

## NOTES

★ Indicates use as required. Numerals in parentheses ( ) refer to notes. Printed in U.S.A.
⊟ Indicates parts not listed in any previous parts book. Prices and specifications subject to change without notice.
* Indicates change or addition.



MyMopar.com

| CODE | PART NAME AND DESCRIPTION | NO. OF CYL. | PLYMOUTH | DODGE | DESOTO | CHRYSLER AND IMPERIAL | PER CAR | PART NUMBER |
|---|---|---|---|---|---|---|---|---|

## NOTES


MyMopar.com

# GROUP 15 - HOOD

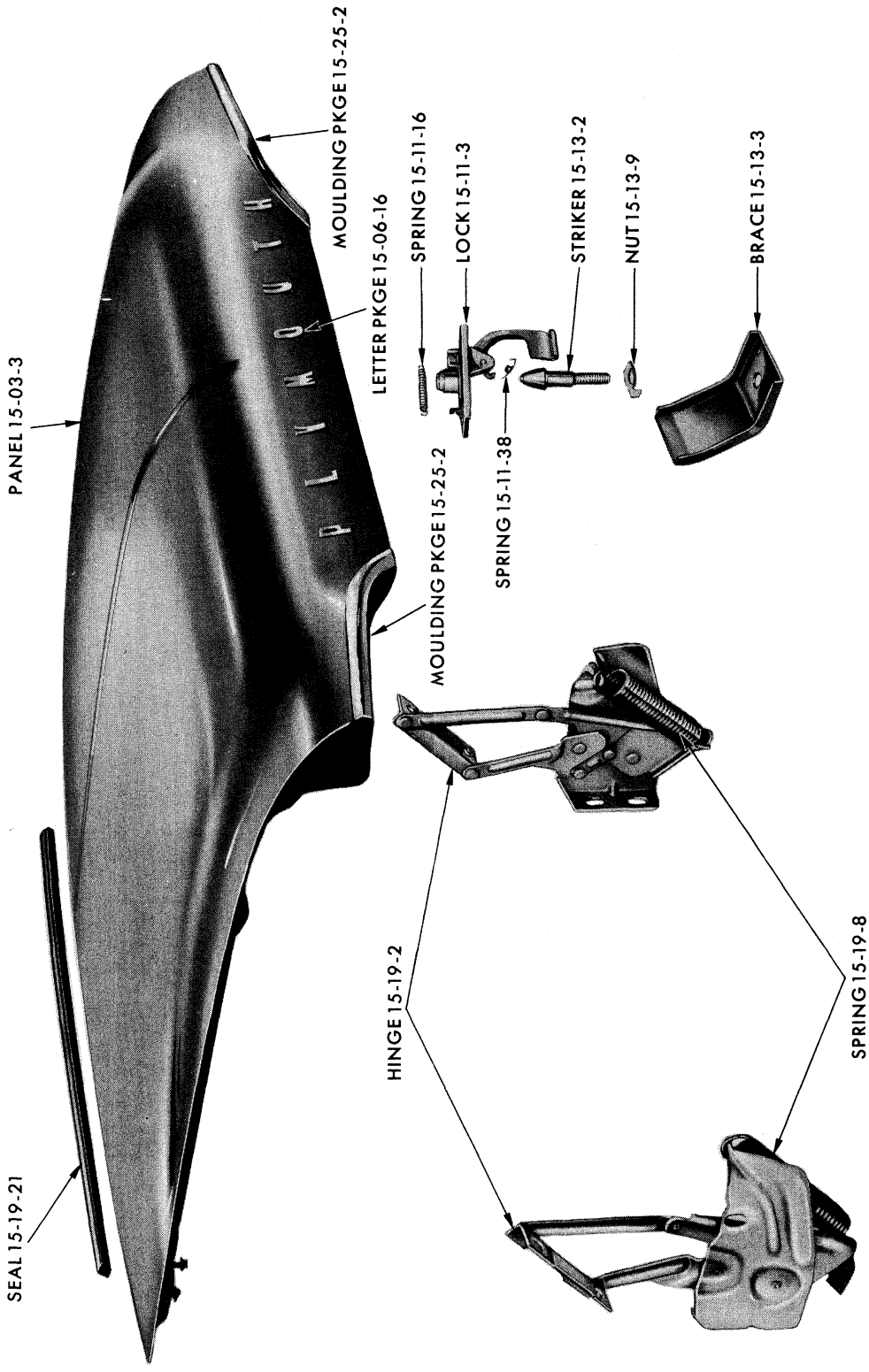


HOOD - PLYMOUTH PP1-2

MyMopar.com

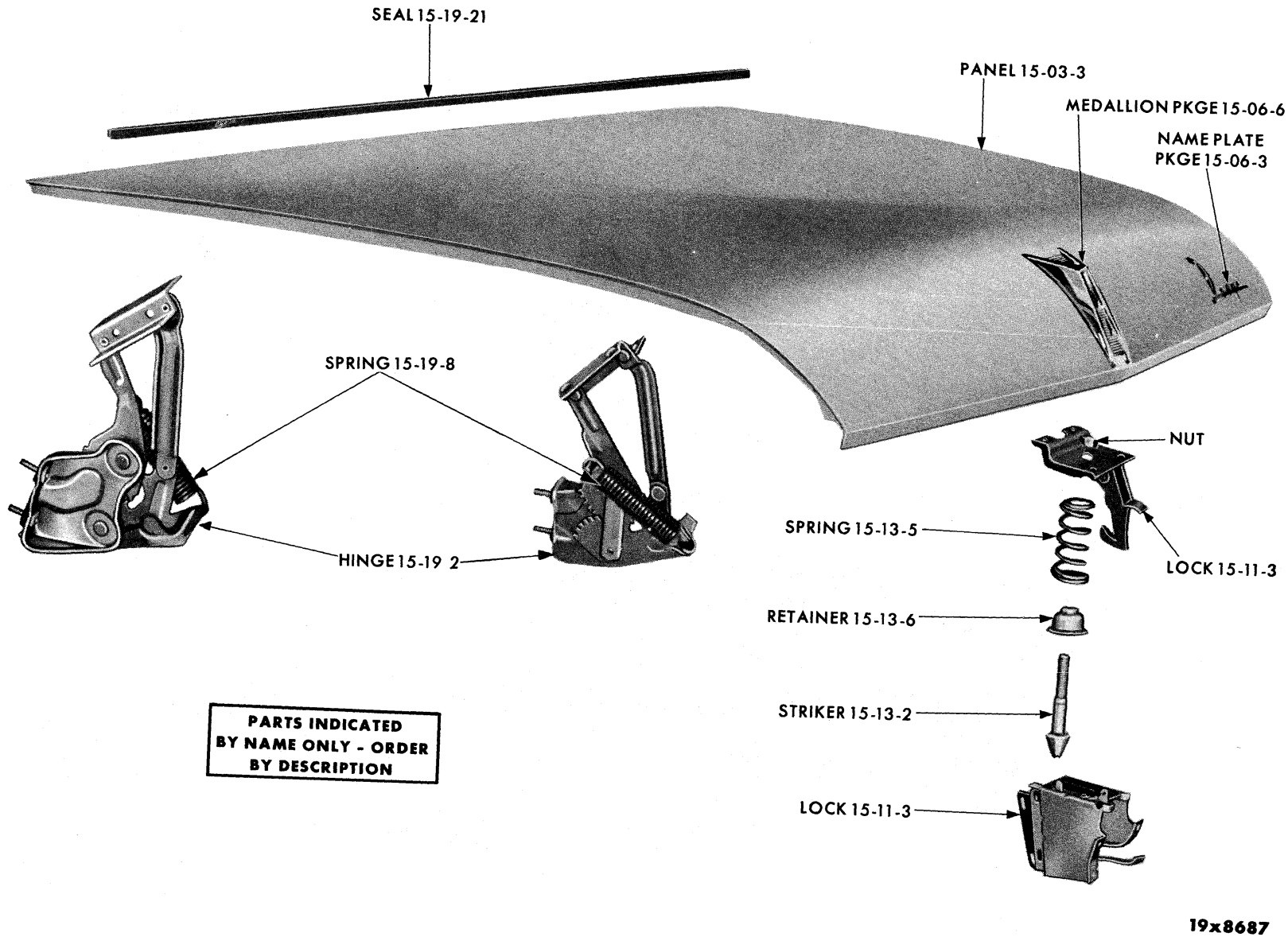


HOOD - DODGE PD1-2-3-4

MyMopar.com

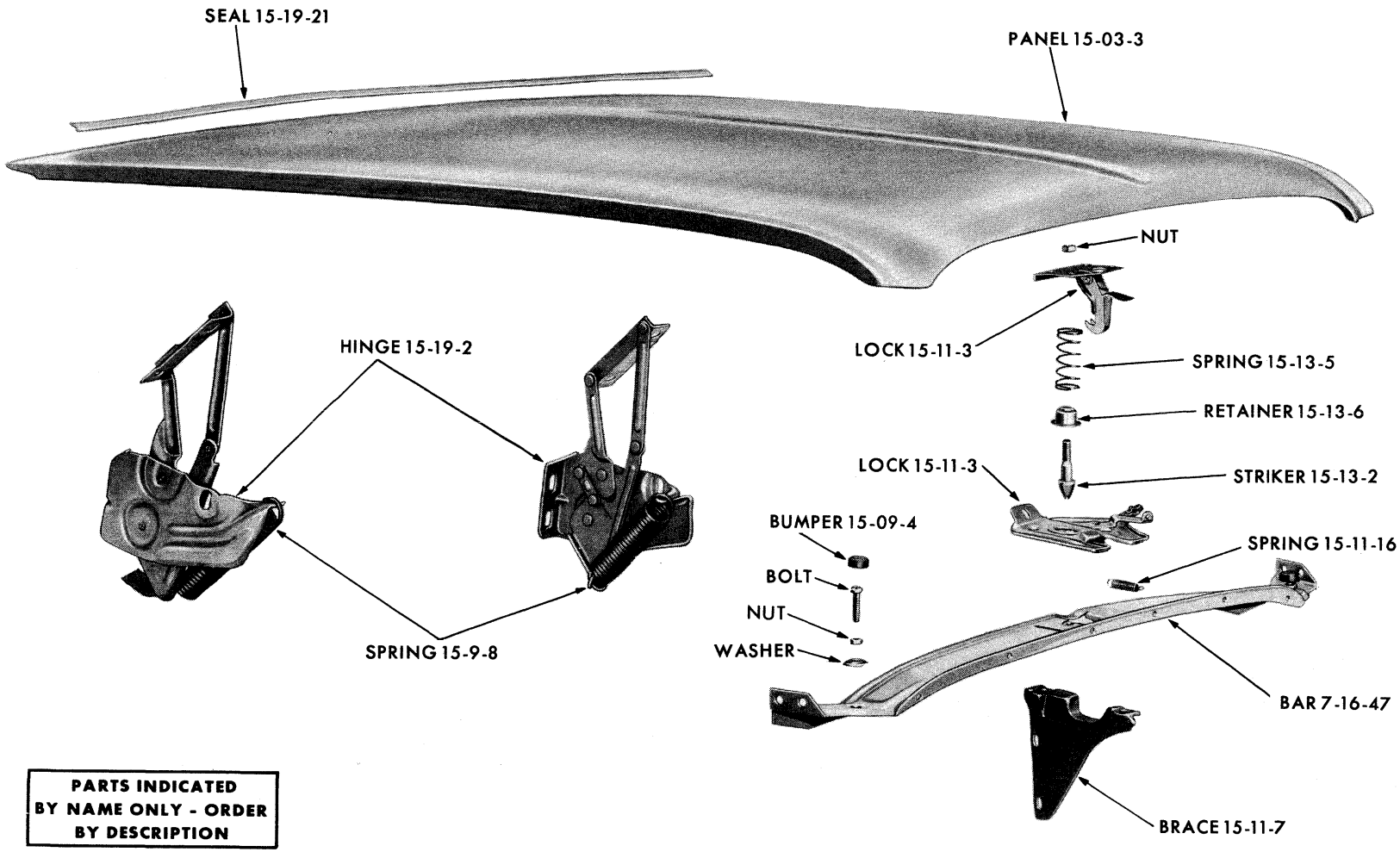




MyMopar.com

Printed in U.S.A.
Page 15-3
October 1, 1959.

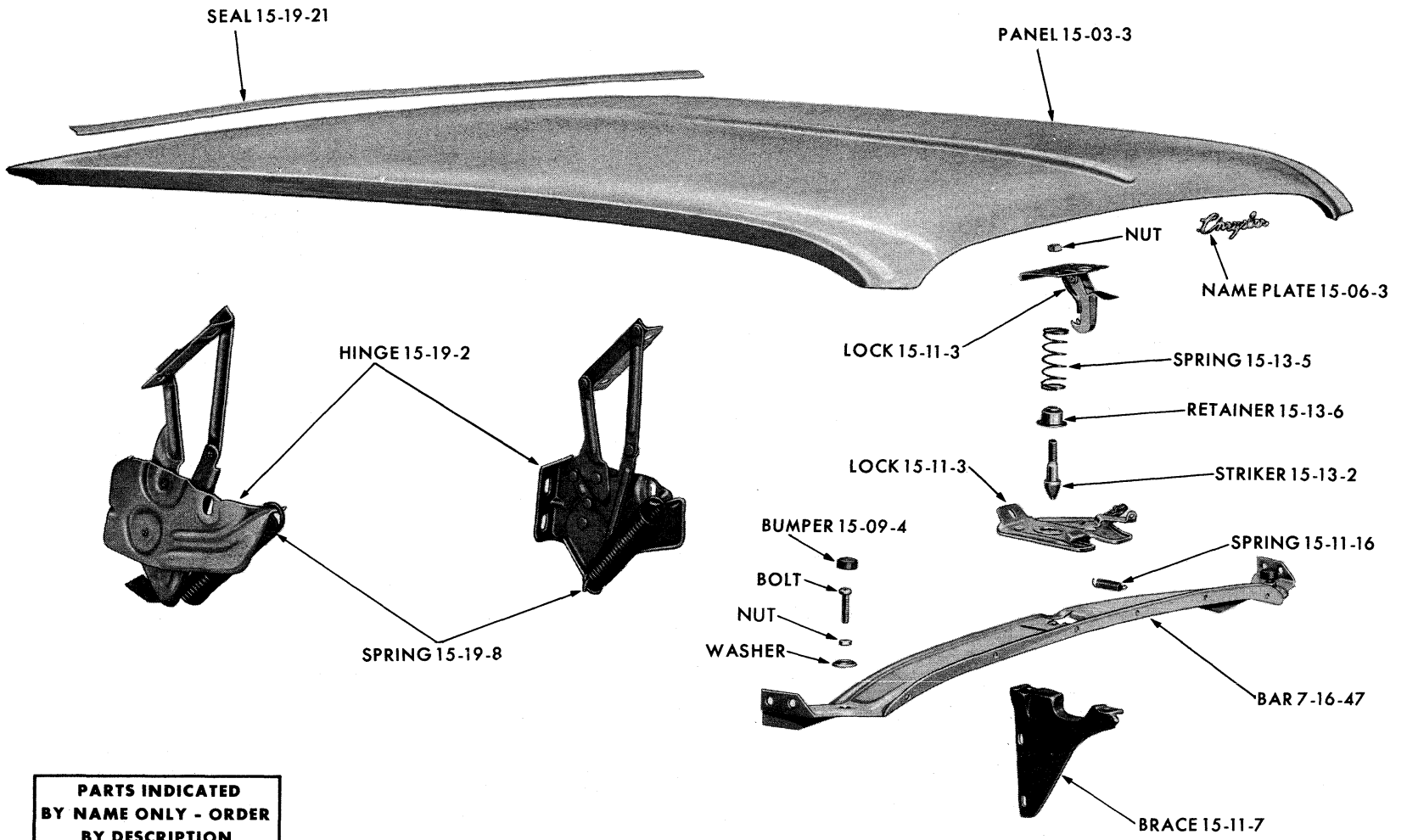




MyMopar.com

October 1, 1959. Page 15-4 Printed in U.S.A.

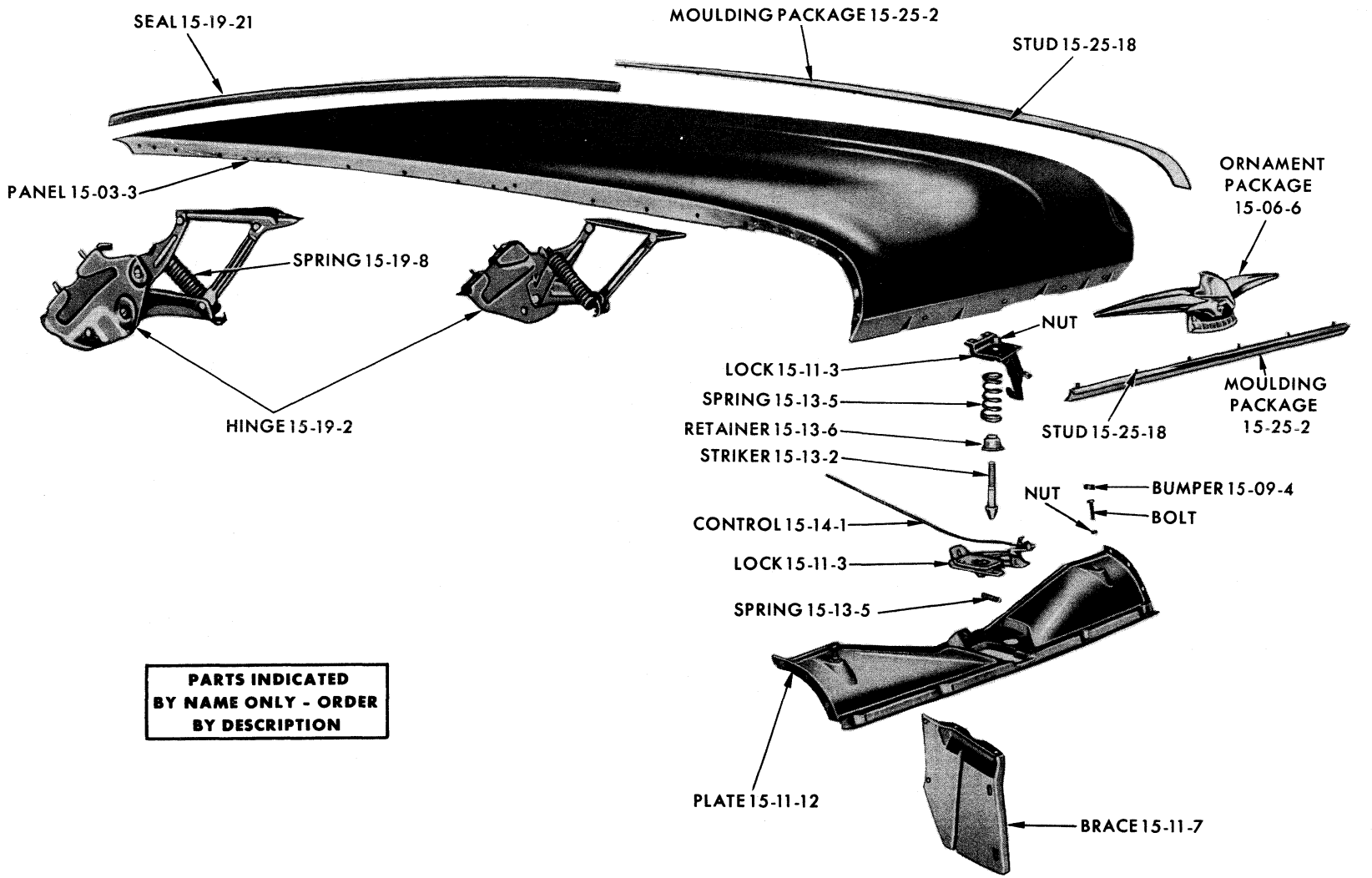


HOOD - IMPERIAL PY1

MyMopar.com

| CODE | PART NAME AND DESCRIPTION | NO. OF CYL. | PLYMOUTH | DODGE | DESOTO | CHRYSLER AND IMPERIAL | PER CAR | PART NUMBER |
|---|---|---|---|---|---|---|---|---|

## NOTES


MyMopar.com

# GROUP 15 - HOOD

## 15-03-0 HOOD TOP PANEL

| CODE | PART NAME AND DESCRIPTION | NO. OF CYL. | PLYMOUTH | DODGE | DESOTO | CHRYSLER AND IMPERIAL | PER CAR | PART NUMBER |
|---|---|---|---|---|---|---|---|---|
| 15-03-3 | PANEL | 6-8 | 60 | - | - | - | 1 | 1863 199 |
| | | 6-8 | - | 60 | - | - | 1 | 1903 932 |
| | PC1 | 8 | - | - | 60 | 60 | 1 | 1903 968 |
| | PC2, PC3 | 8 | - | - | - | 60 | 1 | 1863 699 |
| | PC3-300 | 8 | - | - | - | 60 | 1 | 1903 224 |
| | PY1 | 8 | - | - | - | 60 | 1 | 1863 025 |
| 15-03-5 | SEAL, Hood to Cowl, except PY1 | 6-8 | 60 | 60 | 60 | 60 | 1 | ⊟2165 551 |
| | PY1 | 8 | - | - | - | 60 | 1 | *1751 182 |
| 15-03-18 | ORNAMENT PACKAGE, Hood Top | 8 | - | - | 60 | - | 1 | 2196 532 |
| | NUT | 8 | - | - | 60 | - | 4 | 6013 007 |
| 15-03-19 | MEDALLION PACKAGE, Hood Top Ornament | 8 | - | - | 60 | - | 1 | 2196 533 |
| | CLIP | 8 | - | - | 60 | - | 2 | 445 153 |
| 15-03-30 | NUT, Hood Top Ornament | 8 | - | - | 60 | - | 4 | 6013 007 |
| 15-03-60 | SILENCER | 6-8 | 60 | - | - | - | 1 | 1977 348 |
| | | 6-8 | - | 60 | - | - | 1 | 2089 891 |
| | Front, PC1 | 8 | - | - | 60 | 60 | 1 | 2086 175 |
| | Front, PC2, PC3 | 8 | - | - | - | 60 | 1 | 2086 174 |
| | Rear, except PY1 | 8 | - | - | 60 | 60 | 1 | 2086 176 |
| | PY1 | 8 | - | - | - | 60 | 1 | 1900 763 |

## 15-06-0 HOOD NAME PLATE, MEDALLIONS AND LETTERS

| | | | | | | | | |
|---|---|---|---|---|---|---|---|---|
| 15-06-3 | NAME PLATE PACKAGE, Dodge, PD3, PD4 | 6-8 | - | 60 | - | - | 1 | 2196 420 |
| | CLIP | 6-8 | - | 60 | - | - | 3 | 6000 020 |
| | NAME PLATE PACKAGE, Chrysler | 8 | - | - | - | 60 | 1 | 2196 556 |
| | NUT | 8 | - | - | - | 60 | 4 | 445 153 |
| 15-06-6 | MEDALLION PACKAGE, Hood Front, PD3, PD4 | 6-8 | - | 60 | - | - | 1 | 2196 421 |
| | NUT | 6-8 | - | 60 | - | - | 4 | 6006 264 |
| | ORNAMENT PACKAGE, Hood Front, PY1 | 8 | - | - | - | 60 | 1 | 2196 708 |
| | NUT | 8 | - | - | - | 60 | 4 | 120 375 |
| 15-06-16 | LETTER PACKAGE, Hood Front Name, "P" | 6-8 | 60 | - | - | - | 1 | 2196 152 |
| | "L" | 6-8 | 60 | - | - | - | 1 | 2196 153 |
| | "Y" | 6-8 | 60 | - | - | - | 1 | 2196 154 |
| | "M" | 6-8 | 60 | - | - | - | 1 | 2196 155 |
| | "O" | 6-8 | 60 | - | - | - | 1 | 2196 156 |
| | "U" | 6-8 | 60 | - | - | - | 1 | 2196 157 |
| | "T" | 6-8 | 60 | - | - | - | 1 | 2196 158 |
| | "H" | 6-8 | 60 | - | - | - | 1 | 2196 159 |
| | NUT | 6-8 | 60 | - | - | - | ★ | 6006 215 |
| | PD1, PD2, "D" | 8 | - | 60 | - | - | 1 | 2196 407 |
| | "O" | 8 | - | 60 | - | - | 1 | 2196 408 |
| | "D" | 8 | - | 60 | - | - | 1 | 2196 409 |
| | "G" | 8 | - | 60 | - | - | 1 | 2196 410 |
| | "E" | 8 | - | 60 | - | - | 1 | 2196 411 |
| | NUT | 8 | - | 60 | - | - | ★ | 6010 128 |
| 15-06-17 | NUT, Hood Front Name Letters | 6-8 | 60 | - | - | - | ★ | 6006 215 |
| | NUT, Hood Front Name Letters | 8 | - | 60 | - | - | ★ | 6010 128 |
| | NUT, Hood Front Medallion, PD3, PD4 | 6-8 | - | 60 | - | - | 4 | 6006 264 |
| | NUT, Hood Front Name Plate, PC1, PC2, PC3 | 8 | - | - | - | 60 | 4 | 445 153 |
| | NUT, Hood Front Ornament, PY1 | 8 | - | - | - | 60 | 4 | 120 375 |
| | CLIP, Hood Front Name Plate, PD3, PD4 | 6-8 | - | 60 | - | - | 3 | 6000 020 |

## 15-09-0 HOOD BUMPER

| | | | | | | | | |
|---|---|---|---|---|---|---|---|---|
| 15-09-4 | BUMPER, Fender to Hood | 6-8 | 60 | - | - | - | 4 | 6010 155 |
| | Fender to Hood, V-Type | 6-8 | 60 | 60 | - | - | 4 | *1903 455 |
| | Fender to Hood | 6-8 | - | 60 | - | - | 6 | 1863 598 |
| | Lower Lock Plate, PY1 | 8 | 60 | 60 | - | 60 | 2 | 6010 155 |
| | Fender to Cowl, PY1 | 8 | - | - | - | 60 | 4 | 1639 961 |
| | Fender to Hood | 8 | - | - | 60 | 60 | 6 | 1624 079 |
| | Radiator Grille Bar Bracket to Hood | 6-8 | - | 60 | 60 | 60 | 2 | 6010 155 |
| 15-09-22 | WASHER, Hood Bumper Bolt | 6-8 | 60 | - | 60 | 60 | 2 | 1903 478 |

★ Indicates use as required. Numerals in parentheses ( ) refer to notes. Printed in U.S.A.
⊟ Indicates parts not listed in any previous parts book. Prices and specifications subject to change without notice.
* Indicates change or addition.


Dec. 9, 1960 Supersedes April 20, 1960.

MyMopar.com

| CODE | PART NAME AND DESCRIPTION | NO. OF CYL. | PLYMOUTH | DODGE | DESOTO | CHRYSLER AND IMPERIAL | PER CAR | PART NUMBER |
|---|---|---|---|---|---|---|---|---|
| **15-11-0** | **HOOD LOCK** | | | | | | | |
| 15-11-3 | LOCK, Upper Half | 6-8 | 60 | - | - | - | 1 | 1903 009 |
| | Upper Half | 6-8 | - | 60 | 60 | - | 1 | 1904 485 |
| | Upper Half | 8 | - | - | - | 60 | 1 | 1904 583 |
| | Lower Half, PD3, PD4 | 6-8 | - | 60 | - | - | 1 | 1903 783 |
| | Lower Half, PD1, PD2 | 8 | - | 60 | - | - | 1 | 1863 306 |
| | Lower Half | 8 | - | - | 60 | 60 | 1 | 1863 052 |
| 15-11-7 | BRACE, Lower Lock Plate to Yoke, PC1 | 6-8 | - | 60 | 60 | 60 | 1 | *1863 323 |
| | Lower Lock Plate to Yoke, except PC1 | 8 | - | - | - | 60 | 1 | 1863 719 |
| | Lower Lock Plate, except PY1 | 8 | - | - | 60 | 60 | 1 | 1863 621 |
| | Lower Lock Plate to Dust Shield, PY1 | 8 | - | - | - | 60 | 1 | 1863 161 |
| 15-11-12 | PLATE, Lower Lock, PY1 | 8 | - | - | - | 60 | 1 | 1903 476 |
| 15-11-16 | SPRING, Striker Catch | 6-8 | 60 | - | - | - | 1 | 1755 097 |
| | Except PY1 | 8 | - | - | 60 | 60 | 1 | 1863 701 |
| 15-11-38 | SPRING, Safety Catch | 6-8 | 60 | - | - | - | 1 | 1903 279 |
| | | 8 | - | 60 | - | - | 1 | 1541 977 |
| | | 8 | - | - | 60 | 60 | 1 | 1239 996 |
| 15-11-58 | PLATE, Hood Lock Safety Catch Striker | 6-8 | 60 | - | - | - | 1 | 1904 667 |
| 15-11-64 | NUT, Upper Lock Attaching | 6-8 | 60 | 60 | - | - | 4 | 6000 123 |
| **15-13-0** | **HOOD LOCK STRIKER** | | | | | | | |
| 15-13-2 | STRIKER | 6-8 | 60 | - | - | - | 1 | 1695 602 |
| | | 6-8 | - | 60 | 60 | 60 | 1 | 1863 331 |
| 15-13-3 | BRACE, Striker to Yoke | 6-8 | 60 | - | - | - | 1 | 1863 810 |
| 15-13-5 | SPRING, Upper Lock Striker, except PY1 | 8 | - | 60 | 60 | 60 | 1 | 1903 285 |
| | PY1 | 8 | - | - | - | 60 | 1 | 1373 263 |
| | Striker Bolt | 8 | - | - | 60 | 60 | 1 | 1863 701 |
| 15-13-6 | RETAINER, Upper Lock Striker | 8 | - | 60 | 60 | 60 | 1 | 1696 605 |
| 15-13-9 | NUT, Striker to Brace | 6-8 | 60 | - | - | - | 1 | 6010 080 |
| **15-14-0** | **HOOD LOCK CONTROL** | | | | | | | |
| 15-14-1 | CONTROL, on Instrument Panel | 8 | - | - | 60 | - | 1 | 2080 894 |
| | Except PY1 | 8 | - | - | - | 60 | 1 | 2080 693 |
| | PY1 | 8 | - | - | - | 60 | 1 | 2086 720 |
| 15-14-10 | CLIP, Cable to Fender | 8 | - | - | 60 | 60 | 1 | 1902 288 |
| | PY1 | 8 | - | - | - | 60 | 2 | 6008 244 |
| 15-14-12 | STOP, Control Cable | 8 | - | - | 60 | 60 | 1 | * 932 143 |
| 15-14-13 | SCREW, Control Set | 8 | - | - | 60 | 60 | 1 | * 988 098 |
| 15-14-20 | GROMMET, Control Cable, PY1 | 8 | - | - | - | 60 | 1 | 2161 290 |
| | Except PY1 | 8 | - | - | 60 | 60 | 1 | 2097 816 |
| 15-14-21 | SLEEVE, Control, except PY1 | 8 | - | - | - | 60 | 1 | 2161 405 |
| | PY1 | 8 | - | - | - | 60 | 1 | 2161 406 |
| **15-19-0** | **HOOD HINGE** | | | | | | | |
| 15-19-2 | HINGE, Right, PS1, PC1 | 6-8 | 60 | 60 | 60 | 60 | 1 | 1863 326 |
| | Left, PS1, PC1 | 6-8 | 60 | 60 | 60 | 60 | 1 | 1863 327 |
| | Right, PS2, PC2, PC3 | 8 | - | - | 60 | 60 | 1 | 1863 222 |
| | Left, PS2, PC2, PC3 | 8 | - | - | 60 | 60 | 1 | 1863 223 |
| | Right, PY1 | 8 | - | - | - | 60 | 1 | 1903 930 |
| | Left, PY1 | 8 | - | - | - | 60 | 1 | 1903 931 |
| 15-19-4 | SCREW, w/WASHER, Hinge to Fender Side Shield, except PY1 | 6-8 | 60 | 60 | 60 | 60 | 2 | 1903 677 |
| | SCREW, w/WASHER, Hinge to Hood Flange Reinforcement, except PY1 | 6-8 | 60 | 60 | 60 | 60 | 4 | 1903 677 |
| | SCREW, w/WASHER, Hinge to Cowl, except PY1 | 6-8 | 60 | 60 | 60 | 60 | 4 | 1903 677 |
| | SCREW, w/WASHER, Hinge to Hood Hinge Strainer, PY1 | 8 | - | - | - | 60 | 4 | 1832 721 |
| | SCREW, w/WASHER, Hinge Plate to Hood Hinge Flange, PY1 | 8 | - | - | - | 60 | 2 | 1832 721 |



MyMopar.com

| CODE | PART NAME AND DESCRIPTION | NO. OF CYL. | PLYMOUTH | DODGE | DESOTO | CHRYSLER AND IMPERIAL | PER CAR | PART NUMBER |
|---|---|---|---|---|---|---|---|---|
| **15-19-0** | **HOOD HINGE - Cont'd** | | | | | | | |
| 15-19-4 | STUD, Hinge to Dash Panel, Left Side only, PY1 | 8 | - | - | - | 60 | 2 | 1863 019 |
| | SCREW, w/WASHER, Hinge Body Half to Dash Panel Hinge Support, PY1 | 8 | - | - | - | 60 | 2 | 6010 019 |
| | SCREW, w/WASHER, Hinge Plate to Fender Bracket, PY1 | 8 | - | - | - | 60 | 2 | 1903 395 |
| | SCREW, w/WASHER, Hinge Plate Body Half to Dash Panel Brace, PY1 | 8 | - | - | - | 60 | 2 | 1903 395 |
| 15-19-8 | SPRING, PC1 | 6-8 | 60 | 60 | 60 | 60 | 2 | 1863 235 |
| | PC2, PC3 | 8 | - | - | - | 60 | 2 | 1863 708 |
| | PY1 | 8 | - | - | - | 60 | 2 | 1754 236 |
| 15-19-21 | SEAL, Hood Strainer to Cowl, except PY1 | 6-8 | 60 | - | 60 | 60 | 1 | 2082 965 |
| | Hood Panel to Cowl, PD1, PD2 | 8 | 60 | 60 | - | - | 1 | 2082 965 |
| **15-25-0** | **HOOD MOULDING** | | | | | | | |
| 15-25-2 | MOULDING PACKAGE, Front, Right, PP1-M, PP1-H, PP2-M, PP2-H | 6-8 | 60 | - | - | - | 1 | 2196 168 |
| | Left, PP1-M, PP1-H, PP2-M, PP2-H | 6-8 | 60 | - | - | - | 1 | 2196 169 |
| | CLIP | 6-8 | 60 | - | - | - | 2 | 6010 214 |
| | CLIP | 6-8 | 60 | - | - | - | 4 | 6010 217 |
| | MOULDING PACKAGE, Top, PY1 | 8 | - | - | - | 60 | 1 | ⊟2196 707 |
| | MOULDING PACKAGE, Front, PY1 | 8 | - | - | - | 60 | 1 | ⊟2196 709 |
| 15-25-18 | CLIP, Front Moulding | 6-8 | 60 | - | - | - | ★ | 6010 214 |
| | Front Moulding | 6-8 | 60 | - | - | - | ★ | 6010 217 |
| | STUD, Front Moulding, PY1 | 8 | - | - | - | 60 | ★ | 6010 020 |
| | NUT, Top Moulding, PY1 | 8 | - | - | - | 60 | 7 | 6010 128 |
| **15-28-0** | **HOOD TOP STRAINER** | | | | | | | |
| 15-28-1 | STRAINER, Center | 6-8 | 60 | - | - | - | 1 | 1903 604 |
| 15-28-14 | CLIP, Seal | 6-8 | 60 | 60 | 60 | 60 | ★ | 6010 094 |
| | | 6-8 | - | 60 | - | - | 6 | 6010 230 |
| 15-28-18 | SEAL (sold by the foot) | 6-8 | 60 | 60 | 60 | 60 | ★ | 1242 974 |

## NOTES

★ Indicates use as required. Numerals in parentheses ( ) refer to notes. Printed in U.S.A.
⊟ Indicates parts not listed in any previous parts book. Prices and specifications subject to change without notice.
* Indicates change or addition.


Apr. 20, 1960 Supersedes Dec. 10, 1959.
MyMopar.com

| CODE | PART NAME AND DESCRIPTION | NO. OF CYL. | PLYMOUTH | DODGE | DESOTO | CHRYSLER AND IMPERIAL | PER CAR | PART NUMBER |
|---|---|---|---|---|---|---|---|---|

## NOTES



MyMopar.com

# GROUP 16 - PROPELLER SHAFT AND UNIVERSAL JOINT

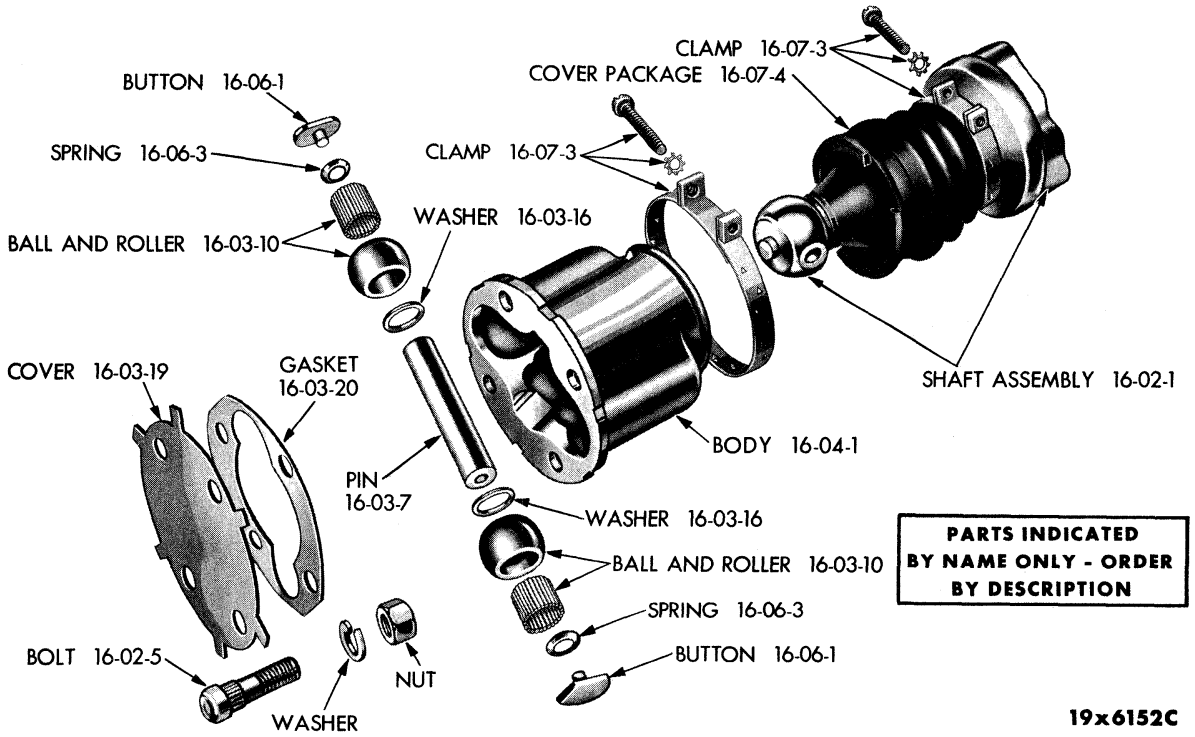


FRONT AND REAR UNIVERSAL JOINT AND PROPELLER SHAFT (BALL AND PIN TYPE)

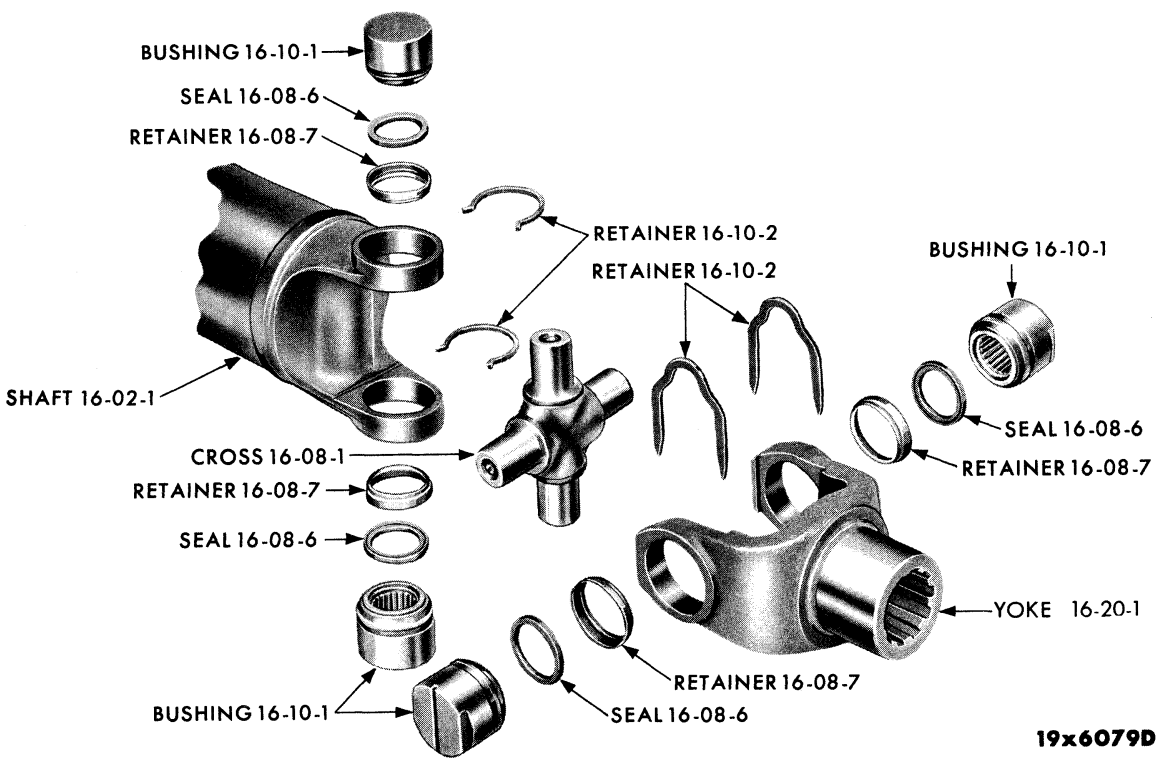



MyMopar.com

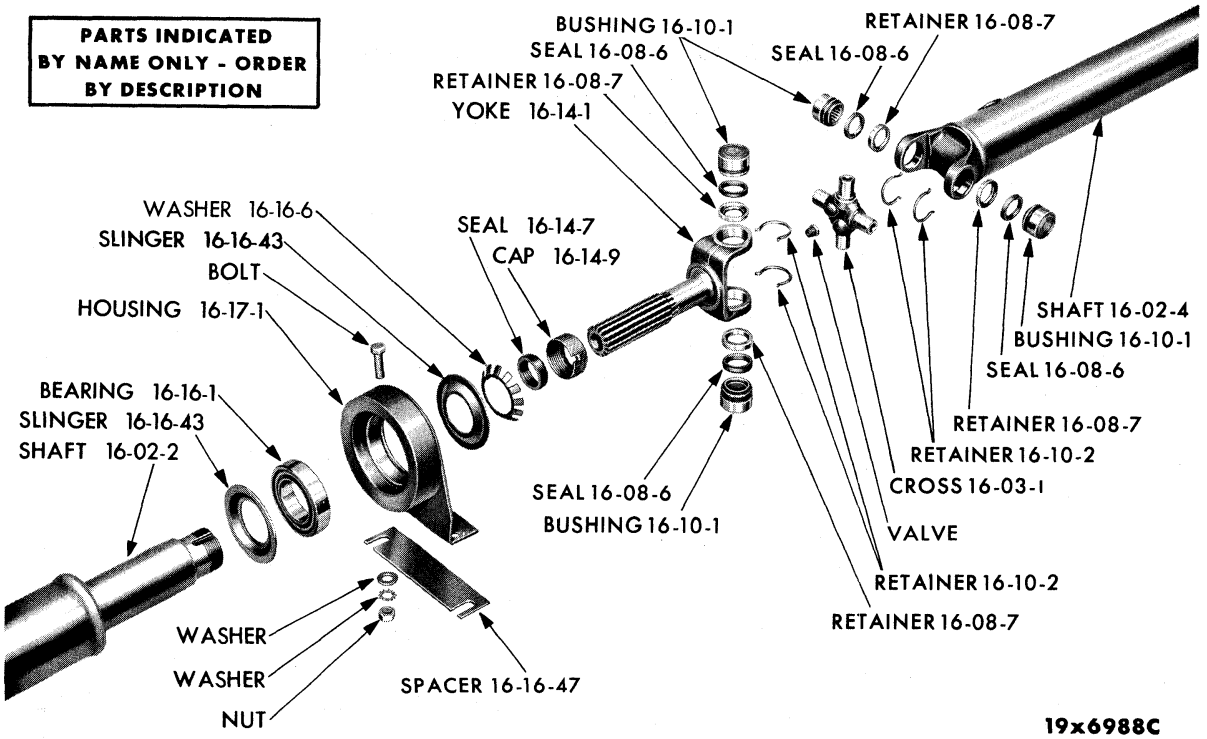


PROPELLER SHAFT AND CENTER BEARING

## NOTES



MyMopar.com

# GROUP 16 - PROPELLER SHAFT AND UNIVERSAL JOINT

## 16-02-0 PROPELLER SHAFT

| CODE | PART NAME AND DESCRIPTION | NO. OF CYL. | PLYMOUTH | DODGE | DESOTO | CHRYSLER AND IMPERIAL | PER CAR | PART NUMBER |
|---|---|---|---|---|---|---|---|---|
| 16-02-1 | SHAFT, 55" lgh., PD3, w/Std. Trans. | 6 | 60 | 60 | - | - | 1 | ⊟2200 219 |
| | 55" lgh., PD3, w/PowerFlite Trans. | 6 | 60 | 60 | - | - | 1 | *1732 699 |
| | 59 1/4" lgth., PD2, PS1 w/3 Speed Auto. Trans., PD1 w/T-85 Trans. | 6-8 | - | 60 | 60 | 60 | 1 | *2200 534 |
| | 55" lgth. PP1, PP2, PD3, PD4, w/Std. Trans. except Sub., PP1, PD3, w/s Speed Auto. Trans., except Sub. PP2, w/PowerFlite Trans., except Sub. | 6-8 | 60 | 60 | - | - | 1 | 1734 118 |
| | 59" lgh., PP1, PP2, PD1, w/Std. Trans., Sub. | 6-8 | 60 | 60 | - | - | 1 | 1856 923 |
| | 59" lgh., PP1, PP2 w/PowerFlite Trans. Sub., PP1, PD4 w/3 Speed Auto. Trans., Sub. | 6-8 | 60 | 60 | - | - | 1 | 1856 963 |
| | 59" lgh., PP2, PD4 w/85 Manual Trans. w/High Performance, Sub., PP2, PD4, w/3 Speed Auto. Trans. Sub., PCH-300 All | 8 | 60 | 60 | - | 60 | 1 | 1856 931 |
| | 55" lgh., PP2, PD4 w/T85 Manual Trans. w/High Performance, except Sub., PP2, PD2, PD4, w/3 Speed Auto. Trans., except Sub. | 8 | 60 | 60 | - | - | 1 | 1739 930 |
| | 59" lgh., PP2 w/3 Speed Auto. Trans., Sub., PD2 w/Std. or 3 Speed Auto. Trans., Sub., PD4, PS1, w/PowerFlite Trans., PD1, w/3 Speed Auto. Trans., PC1, PC2, PC3, All | 8 | 60 | 60 | 60 | 60 | 1 | 1856 933 |
| | 55" lgh., PP2, PD4, w/PowerFlite Trans., except Sub. | 8 | 60 | 60 | - | - | 1 | 1856 961 |
| | 59" lgh., PD1, w/Std. Trans. | 8 | - | 60 | - | - | 1 | 2200 532 |
| 16-02-2 | SHAFT, Front, 26 1/16" lgh., PY1 | 8 | - | - | - | 60 | 1 | *1945 841 |
| | Front, 25 7/8" lgh. | 8 | - | - | - | 60 | 1 | ⊟2200 527 |
| 16-02-4 | SHAFT, Rear, 33 1/16" lgh., PY1 | 8 | - | - | - | 60 | 1 | 1946 297 |
| 16-02-5 | BOLT, Trans. End, w/Std. Trans. or PowerFlite | 6-8 | 60 | 60 | 60 | - | 4 | 1326 773 |
| | w/Auto. 3 Speed Trans. | 6-8 | 60 | 60 | 60 | 60 | 4 | 1946 283 |
| | SCREW, Axle End | 6-8 | 60 | 60 | 60 | 60 | 4 | 952 538 |

## 16-03-0 UNIVERSAL JOINT

| | | | | | | | | |
|---|---|---|---|---|---|---|---|---|
| 16-03-1 | JOINT PACKAGE, Front, except PD2 | 6-8 | 60 | 60 | - | - | 1 | 1603 398 |
| | w/Auto. 3 Speed Trans., except PY1 | 8 | 60 | 60 | 60 | 60 | 1 | 1752 680 |
| | Rear, except PY1 | 6-8 | 60 | 60 | 60 | 60 | 1 | 1752 624 |
| | PY1 | 8 | - | - | - | 60 | 2 | 1752 624 |
| | Center Bearing, PY1 | 8 | - | - | - | 60 | 1 | 1752 624 |
| 16-03-3 | ROLLER PACKAGE | 6-8 | 60 | 60 | 60 | 60 | ★ | 638 637 |
| 16-03-7 | PIN, w/Std. or PowerFlite Trans. | 6-8 | 60 | 60 | | | 1 | 579 445 |
| | w/Auto. 3 Speed Trans. | 8 | 60 | 60 | 60 | 60 | 1 | 1739 923 |
| 16-03-10 | BALL, w/ROLLER, w/Std. Trans. | 6-8 | 60 | 60 | - | - | 2 | 1550 466 |
| | w/Auto. Trans. | 6-8 | 60 | 60 | 60 | 60 | 2 | 1739 927 |
| 16-03-16 | WASHER, Thrust | 6-8 | 60 | 60 | 60 | 60 | 1 | 605 004 |
| 16-03-19 | COVER, Grease, w/Std. Trans. | 6-8 | 60 | 60 | - | - | 1 | 602 820 |
| | w/Auto. Trans. | 8 | 60 | 60 | 60 | 60 | 1 | 1635 092 |
| 16-03-20 | GASKET, w/Std. Trans. | 6-8 | 60 | 60 | - | - | 1 | 1616 185 |
| | w/Auto. Trans. | 8 | 60 | 60 | 60 | 60 | 1 | 1635 098 |

## 16-04-0 UNIVERSAL JOINT BODY

| | | | | | | | | |
|---|---|---|---|---|---|---|---|---|
| 16-04-1 | BODY, w/Std. Trans. | 6-8 | 60 | 60 | - | - | 1 | 1734 159 |
| | w/Auto. Trans. | 8 | 60 | 60 | 60 | 60 | 1 | 1739 920 |



MyMopar.com

| CODE | PART NAME AND DESCRIPTION | NO. OF CYL. | PLYMOUTH | DODGE | DESOTO | CHRYSLER AND IMPERIAL | PER CAR | PART NUMBER |
|---|---|---|---|---|---|---|---|---|
| **16-06-0** | **UNIVERSAL JOINT CENTERING BUTTON** | | | | | | | |
| 16-06-1 | BUTTON, w/Std. Trans. | 6-8 | 60 | 60 | - | - | 2 | 629 768 |
| | w/Auto. Trans. | 8 | 60 | 60 | 60 | 60 | 2 | 1739 924 |
| 16-06-3 | SPRING, except PY1 | 6-8 | 60 | 60 | 60 | 60 | 2 | 1739 926 |
| **16-07-0** | **UNIVERSAL JOINT DUST COVER** | | | | | | | |
| 16-07-3 | CLAMP, Short | 6-8 | 60 | 60 | 60 | 60 | 1 | 870 540 |
| | Long, 2 1/2", w/Std. Trans. | 6-8 | 60 | 60 | - | - | 1 | 870 539 |
| | Long, 2 3/4" | 6-8 | 60 | 60 | 60 | 60 | ★ | 1532 943 |
| 16-07-4 | COVER PACKAGE, Dust, w/Std. Trans. | 6-8 | 60 | 60 | - | - | 1 | 1603 397 |
| | w/Auto. Trans. | 8 | 60 | 60 | 60 | 60 | 1 | 1450 448 |
| **16-08-0** | **UNIVERSAL JOINT CROSS** | | | | | | | |
| 16-08-6 | SEAL, Axle End | 6-8 | 60 | 60 | 60 | 60 | ★ | 857 999 |
| 16-08-7 | RETAINER, Seal, Axle End | 6-8 | 60 | 60 | 60 | 60 | ★ | 1739 912 |
| **16-09-0** | **UNIVERSAL JOINT CROSS ROLLER AND BEARING BLOCK** | | | | | | | |
| 16-09-1 | ROLLER and BEARING BLOCK, except PY1 | 6-8 | 60 | 60 | 60 | 60 | 2 | 1739 914 |
| | PY1 | 8 | - | - | - | 60 | 4 | 1739 914 |
| 16-09-2 | RETAINER | 6-8 | 60 | 60 | 60 | 60 | ★ | 858 007 |
| **16-10-0** | **UNIVERSAL JOINT CROSS ROLLER AND BUSHING** | | | | | | | |
| 16-10-1 | ROLLER, w/BUSHING, except PY1 | 6-8 | 60 | 60 | 60 | 60 | 4 | 1739 913 |
| | PY1 | 8 | - | - | - | 60 | 12 | 1739 913 |
| 16-10-2 | RETAINER | 6-8 | 60 | 60 | 60 | 60 | ★ | 858 006 |
| 16-10-3 | CLAMP, Bushing | 6-8 | 60 | 60 | 60 | 60 | 2 | 1828 824 |
| **16-14-0** | **PROPELLER SHAFT SPLINE OR SLIDING YOKE** | | | | | | | |
| 16-14-1 | YOKE, PY1 | 8 | - | - | - | 60 | 1 | 1739 915 |
| 16-14-7 | SEAL, Oil, PY1 | 8 | - | - | - | 60 | 1 | 1672 049 |
| 16-14-9 | CAP, Oil Seal, PY1 | 8 | - | - | - | 60 | 1 | 1672 050 |
| **16-16-0** | **PROPELLER SHAFT CENTER BEARING** | | | | | | | |
| 16-16-1 | BEARING, PY1 | 8 | - | - | - | 60 | 1 | 1672 051 |
| 16-16-6 | WASHER, Lock, PY1 | 8 | - | - | - | 60 | 1 | 1638 151 |
| 16-16-43 | SLINGER, Dust, PY1 | 8 | - | - | - | 60 | 2 | 1672 053 |
| 16-16-47 | SPACER, PY1 | 8 | - | - | - | 60 | 2 | 1945 836 |
| **16-17-0** | **PROPELLER SHAFT CENTER BEARING HOUSING** | | | | | | | |
| 16-17-1 | INSULATOR, PY1 | 8 | - | - | - | 60 | 1 | 1945 831 |
| **16-20-0** | **PROPELLER SHAFT FLANGE OR YOKE** | | | | | | | |
| 16-20-1 | FLANGE, Trans. Shaft, w/Std. Trans. | 6 | 60 | 60 | - | - | 1 | 2124 279 |
| | w/Std. and PowerFlite Trans. | 8 | 60 | - | - | - | 1 | 1636 452 |
| | ADAPTER, Trans. Shaft Flange, 2 1/4" lgh., PY1 | 8 | 60 | - | - | 60 | 1 | *1945 839 |
| | ADAPTER, Trans. Shaft Flange, 2 5/8" lgh. PY1 | 8 | - | - | - | 60 | 1 | ⊟2200 214 |
| | NOTE: For Trans. Shaft Flanges not shown see Code 4-01-1. Serviced in Hand Brake Drum and Flange Assembly. | | | | | | | |
| | Axle Drive Pinion w/8 1/4" Ring Gear Dia. | 6 | 60 | 60 | - | - | 1 | *1828 646 |
| | FLANGE PACKAGE, Axle End AFTER Jobs | 6 | 60 | 60 | - | - | 1 | ⊟2240 613 |
| | w/8 3/4" Ring Gear Dia. | 6-8 | 60 | 60 | 60 | 60 | 1 | ⊟2240 612 |
| 16-20-2 | WASHER, Axle Flange | 6-8 | 60 | 60 | 60 | 60 | 1 | 1556 556 |
| | Trans. Flange | 6-8 | 60 | 60 | - | - | 1 | 1949 319 |
| 16-20-3 | NUT, Trans. Flange | 6-8 | 60 | 60 | 60 | 60 | 1 | 1824 309 |
| | Axle Flange | 6-8 | 60 | 60 | 60 | 60 | 1 | 1556 638 |



MyMopar.com

# GROUP 17 - SPRINGS

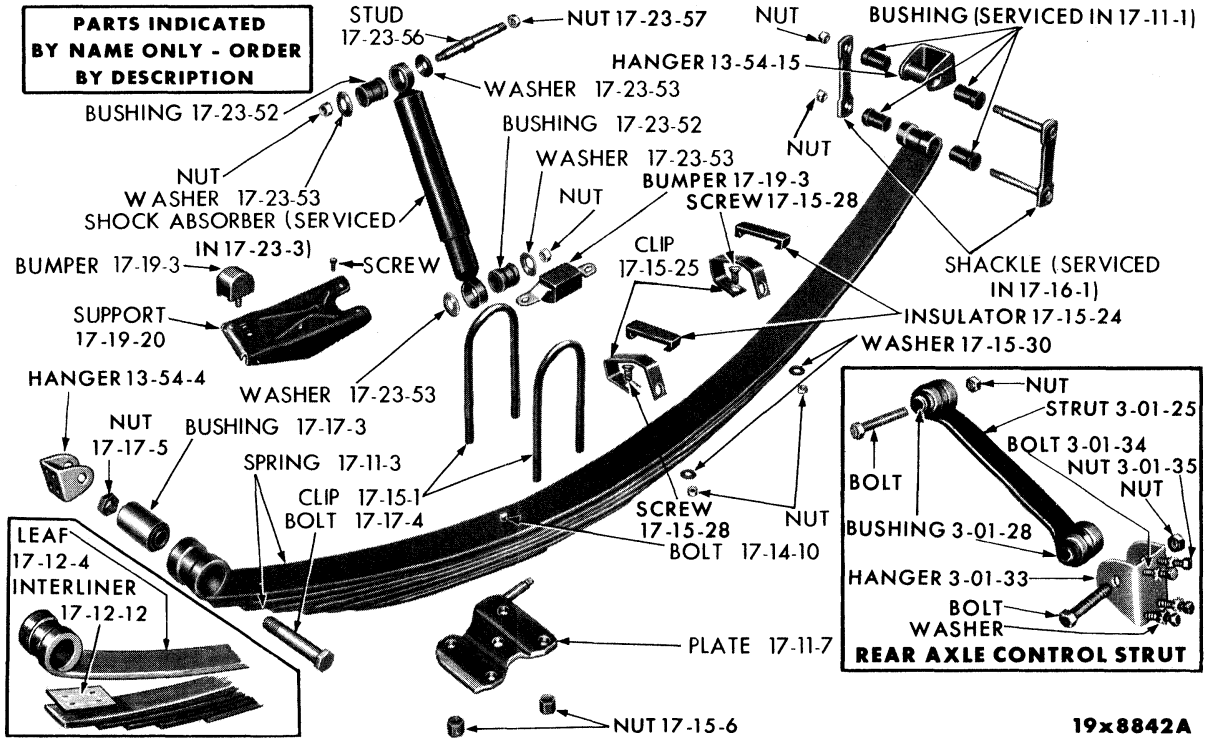


REAR SPRING

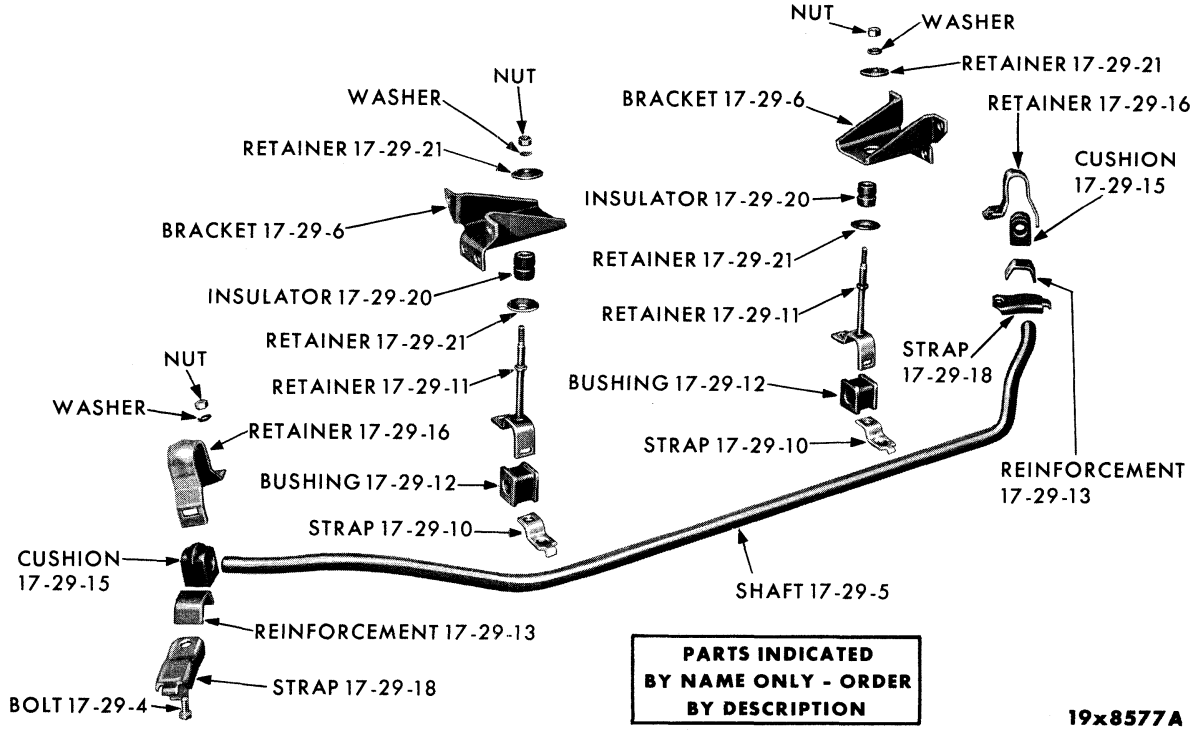


SWAY ELIMINATOR



MyMopar.com

| CODE | PART NAME AND DESCRIPTION | NO. OF CYL. | PLYMOUTH | DODGE | DESOTO | CHRYSLER AND IMPERIAL | PER CAR | PART NUMBER |
|---|---|---|---|---|---|---|---|---|

## NOTES


MyMopar.com

# GROUP 17 - SPRINGS

## 17-11-0 REAR SPRINGS

| CODE | PART NAME AND DESCRIPTION | NO. OF CYL. | PLYMOUTH | DODGE | DESOTO | CHRYSLER AND IMPERIAL | PER CAR | PART NUMBER |
|---|---|---|---|---|---|---|---|---|
| 17-11-1 | BUSHING PACKAGE | 6-8 | 60 | 60 | 60 | 60 | 2 | 1450 089 |
| 17-11-3 | SPRING, Std., except Sub. | 6 | 60 | 60 | - | - | 2 | 2084 900 |
| | Std., Right, 4 D. Sub. | 6-8 | 60 | 60 | - | - | 1 | 2084 902 |
| | Std., Left, 4 D. Sub. | 6-8 | 60 | 60 | - | - | 1 | 2084 903 |
| | Std., except Sub., PD4 | 8 | 60 | 60 | - | - | 2 | ⊟2240 237 |
| | Std., 2 D. Sub. | 6-8 | 60 | - | - | - | 2 | 2084 902 |
| | Std., except Sub., PD1, PD2, PC1 | 8 | - | 60 | 60 | 60 | 1 | *2084 911 |
| | Std., Sub., PC1 | 8 | - | - | - | 60 | 2 | 2084 903 |
| | Std., Right, PC2 | 8 | - | - | - | 60 | 1 | 2240 240 |
| | Std., Left, PC2 | 8 | - | - | - | 60 | 1 | 2084 909 |
| | Std., Right, except Sub., PC3 | 8 | - | - | - | 60 | 1 | 2084 908 |
| | Std., Left, except Sub., PC3 | 8 | - | - | - | 60 | 1 | 2084 909 |
| | Std., Sub., PC3 | 8 | - | - | - | 60 | 2 | 2084 907 |
| | Std., Right, PY1 | 8 | - | - | - | 60 | 1 | 2196 789 |
| | Std., Left, PY1 | 8 | - | - | - | 60 | 1 | 2196 790 |
| | Right, w/Rear End Car Cooling Unit, PY1 | 8 | - | - | - | 60 | 1 | 2196 789 |
| | Left, w/Rear End Car Cooling Unit, PY1 | 8 | - | - | - | 60 | 1 | 2084 898 |
| | Heavy Duty, except Sub., PD3 | 6 | 60 | 60 | - | - | 2 | *2084 914 |
| | Heavy Duty, Sub., PC1 | 6-8 | 60 | 60 | - | 60 | 2 | 2084 915 |
| | Heavy Duty, except Sub., PC1 | 8 | - | - | - | 60 | 2 | 2084 901 |
| | Heavy Duty, Right, PC2, PC3 | 8 | - | - | - | 60 | 1 | 2240 240 |
| | Heavy Duty, Left, PC2, PC3 | 8 | - | - | - | 60 | 1 | 2240 239 |
| | w/Dual Car Cooling, Right, PC2 | 8 | - | - | - | 60 | 1 | 2240 240 |
| | w/Dual Car Cooling, Left, PC2, PC3 | 8 | - | - | - | 60 | 1 | 2240 241 |
| | w/Dual Car Cooling, Right, PC3 | 8 | - | - | - | 60 | 1 | 2084 909 |
| | Heavy Duty, Sub., PC3 | 8 | - | - | - | 60 | 2 | 2084 910 |
| | Heavy Duty, PC3-300 | 8 | - | - | - | 60 | 2 | 2084 906 |
| | Heavy Duty, Right, PY1 | 8 | - | - | - | 60 | 1 | 2196 792 |
| | Heavy Duty, Left, PY1 | 8 | - | - | - | 60 | 1 | 2196 793 |
| | Heavy Duty, 4 D., 2 D., Sp. Cl. Cp. | 8 | 60 | 60 | - | - | 2 | *2084 914 |
| | Heavy Duty, Sp. 4 D., Cv. Cp. | 8 | 60 | 60 | - | - | 2 | ⊟2240 236 |
| 17-11-5 | PLATE, Seat Angle, Sub. | 6-8 | 60 | 60 | - | 60 | 2 | ⊟2122 857 |
| 17-11-7 | PLATE, w/STUD, Right | 6-8 | 60 | 60 | 60 | 60 | 1 | 1856 346 |
| | Left | 6-8 | 60 | 60 | 60 | 60 | 1 | 1856 347 |
| 17-11-10 | INSULATOR, Spring, Lower, PC1 | 6-8 | 60 | 60 | 60 | 60 | 2 | *1731 798 |
| | Upper, PC1 | 6-8 | 60 | 60 | 60 | 60 | 2 | *1731 796 |

## 17-12-0 REAR SPRING LEAF

| | | | | | | | | |
|---|---|---|---|---|---|---|---|---|
| 17-12-4 | LEAF, Main, Std., PD3, PD4, except Sub. | 6-8 | 60 | 60 | - | - | 2 | 2084 819 |
| | Main, Heavy Duty, except Sub., PD3, PD4 | 6-8 | 60 | 60 | - | - | 2 | 2084 818 |
| | Main, Heavy Duty, except Sub., PD1, PD2, PC1 | 8 | - | 60 | 60 | 60 | 2 | 2084 820 |
| | Main, Std., Sub., PC1 | 8 | 60 | 60 | - | 60 | 2 | 2084 822 |
| | Main, Heavy Duty, Sub. | 6-8 | 60 | 60 | - | - | 2 | 2084 821 |
| | Main, Std., except Sub., PD1, PD2, PC1 | 8 | - | 60 | 60 | 60 | 2 | 2084 821 |
| | Main, Std., PC2 | 8 | - | - | - | 60 | 2 | 2084 825 |
| | Main, Std., except Sub., PC3 | 8 | - | - | - | 60 | 2 | 2084 823 |
| | Main, Heavy Duty, except Sub., PC2, PC3 | 8 | - | - | - | 60 | 2 | 2084 824 |
| | Main, Std., Sub., PC3 | 8 | - | - | - | 60 | 2 | 2084 824 |
| | Main, Heavy Duty, Sub., PC3 | 8 | - | - | - | 60 | 2 | ⊟2240 644 |
| | Main, Heavy Duty, PC3-300 | 8 | - | - | - | 60 | 2 | 2084 826 |
| | Main, Std., PY1 | 8 | - | - | - | 60 | 2 | 2084 827 |
| | Main, Heavy Duty, PY1 | 8 | - | - | - | 60 | 2 | 2084 828 |
| | Main, use w/Rear End Car Cooling Unit, PC2, PC3, PY1 | 8 | - | - | - | 60 | 2 | *2084 825 |
| 17-12-12 | INTERLINER, w/FASTENER, Rear End | 6-8 | 60 | 60 | 60 | 60 | ★ | ⊟2123 785 |
| | w/o Fastener, Front End | 6-8 | 60 | 60 | 60 | 60 | ★ | 2122 359 |

## 17-14-0 REAR SPRING CENTER BOLT

| | | | | | | | | |
|---|---|---|---|---|---|---|---|---|
| 17-14-10 | BOLT | 6-8 | 60 | 60 | 60 | 60 | 2 | 1944 361 |

★ Indicates use as required. Numerals in parentheses ( ) refer to notes. Printed in U.S.A.
⊟ Indicates parts not listed in any previous parts book. Prices and specifications subject to change without notice.
* Indicates change or addition.



Dec. 9, 1960 Supersedes April 20, 1960.

MyMopar.com

| CODE | PART NAME AND DESCRIPTION | NO. OF CYL. | PLYMOUTH | DODGE | DESOTO | CHRYSLER AND IMPERIAL | PER CAR | PART NUMBER |
|---|---|---|---|---|---|---|---|---|
| **17-15-0** | **REAR SPRING CLIP** | | | | | | | |
| 17-15-1 | CLIP, 6 1/4" lgh. | 6-8 | 60 | 60 | 60 | 60 | 4 | 1489 745 |
| | 7" lgh. | 6-8 | 60 | 60 | 60 | 60 | 4 | 1489 747 |
| 17-15-6 | NUT | 6-8 | 60 | 60 | 60 | 60 | 8 | 1943 999 |
| 17-15-24 | INSULATOR, Alignment Clip | 6-8 | 60 | 60 | 60 | 60 | 2 | 1829 929 |
| 17-15-25 | CLIP, Alignment, 2 5/8" x 1" lgh. | 6-8 | 60 | 60 | 60 | 60 | ★ | 1820 812 |
| | 2 5/8" x 1 1/4" lgh. | 6-8 | 60 | 60 | 60 | 60 | ★ | 1820 152 |
| | 2 5/8" x 1 1/2" lgh. | 6-8 | 60 | 60 | 60 | 60 | ★ | 1820 153 |
| | 2 5/8" x 1 3/4" lgh. | 6-8 | 60 | - | - | 60 | ★ | 1820 813 |
| | 2 5/8" x 2" lgh. | 8 | - | - | - | 60 | ★ | 1829 928 |
| 17-15-28 | SCREW, Alignment Clip | 6-8 | 60 | 60 | 60 | 60 | 4 | 1485 510 |
| 17-15-30 | WASHER, Alignment Clip Screw | 6-8 | 60 | 60 | 60 | 60 | 4 | 1530 398 |
| **17-16-0** | **REAR SPRING SHACKLE** | | | | | | | |
| 17-16-1 | SHACKLE and BUSHING PACKAGE, except Sub., PC1 | 6-8 | 60 | 60 | 60 | 60 | 2 | 1450 961 |
| | Sub. | 6-8 | 60 | 60 | - | 60 | 2 | 2084 236 |
| | Except Sub., PC2, PC3, PY1 | 8 | - | - | - | 60 | 2 | 1450 087 |
| **17-17-0** | **REAR SPRING SILENT BLOC** | | | | | | | |
| 17-17-3 | BUSHING, Front Pivot, PC1, PC2, PC3 | 6-8 | 60 | 60 | 60 | 60 | 2 | 1948 869 |
| | PY1 | 8 | - | - | - | 60 | 2 | 1530 380 |
| 17-17-4 | BOLT, PC1, PC2, PC3 | 6-8 | 60 | 60 | 60 | 60 | 2 | 1948 876 |
| | PY1 | 8 | - | - | - | 60 | 2 | 1400 788 |
| 17-17-5 | NUT, Bolt | 6-8 | 60 | 60 | 60 | 60 | 2 | 1948 877 |
| **17-19-0** | **REAR SPRING BUMPER** | | | | | | | |
| 17-19-3 | BUMPER, Axle Drive Pinion Carrier, PC1, PC2, PC3 | 6-8 | 60 | 60 | 60 | 60 | 1 | 1948 338 |
| | PY1 | 8 | - | - | - | 60 | 1 | 1637 031 |
| | Frame Rear Axle, except Sub., PC1, PC2, PC3 | 6-8 | 60 | 60 | 60 | 60 | 2 | 1948 342 |
| | Frame Rear Axle, Sub., PC1 | 6-8 | 60 | 60 | - | 60 | 2 | 1940 238 |
| | Frame Rear Axle, Heavy Duty, except Sub. | 6-8 | 60 | 60 | 60 | 60 | 2 | 1940 238 |
| | Frame Rear Axle, Std., PY1 | 8 | - | - | - | 60 | 2 | 1828 851 |
| | BUMPER, w/BLOCK, Heavy Duty, PC1, PC2, PC3 | 6-8 | 60 | 60 | 60 | 60 | 2 | 1948 345 |
| | BUMPER, w/BLOCK, Heavy Duty, PY1 | 8 | - | - | - | 60 | 2 | 1940 234 |
| 17-19-6 | NUT, Axle Drive Pinion Carrier Bumper Retainer, PC1, PC2, PC3 | 6-8 | 60 | 60 | 60 | 60 | 1 | 1943 997 |
| 17-19-10 | PLATE, Axle Drive Pinion Carrier Bumper Retainer, PY1 | 8 | - | - | - | 60 | 1 | 1730 183 |
| 17-19-20 | SUPPORT, Axle Drive Pinion Carrier Bumper, PC1, PC2, PC3 | 6-8 | 60 | 60 | 60 | 60 | 1 | 1948 351 |
| | PY1 | 8 | - | - | - | 60 | 1 | 1673 531 |
| **17-23-0** | **SHOCK ABSORBER** | | | | | | | |
| 17-23-3 | PACKAGE, Rear, Std., PC1, PC2, PC3, 1" dia. | 6-8 | 60 | 60 | 60 | 60 | 2 | ⊟2240 358 |
| | Rear, Heavy Duty, PC1, PC2, PC3, 1" dia. | 6-8 | 60 | 60 | 60 | 60 | 2 | ⊟2240 360 |
| | Rear, Heavy Duty, PC1, PC2, PC3, 1 3/8" dia. | 6-8 | 60 | 60 | 60 | 60 | 2 | ⊟2240 362 |
| | Rear, Std., PY1 | 8 | - | - | - | 60 | 2 | ⊟2240 359 |
| | Rear, Heavy Duty, PY1 | 8 | - | - | - | 60 | 2 | ⊟2240 361 |
| | Front, Std., PY1 | 6-8 | 60 | 60 | - | 60 | 2 | *2240 353 |
| | Front, Heavy Duty | 6-8 | 60 | 60 | 60 | 60 | 2 | ⊟2240 356 |
| | Front, Std., PC1, PC2, PC3 | 8 | - | - | 60 | 60 | 2 | ⊟2240 355 |
| 17-23-52 | BUSHING, Front Shock Absorber Upper Mounting | 6-8 | 60 | 60 | 60 | 60 | 2 | 1614 385 |
| | Lower Mounting | 6-8 | 60 | 60 | 60 | 60 | 2 | 1635 588 |
| | Rear | 6-8 | 60 | 60 | 60 | 60 | 4 | 1319 902 |



MyMopar.com

| CODE | PART NAME AND DESCRIPTION | NO. OF CYL. | PLYMOUTH | DODGE | DESOTO | CHRYSLER AND IMPERIAL | PER CAR | PART NUMBER |
|---|---|---|---|---|---|---|---|---|
| **17-23-0** | **SHOCK ABSORBERS - Cont'd** | | | | | | | |
| 17-23-53 | WASHER, Rear Shock Absorber Pivot Bushing Retainer, Inner | 6-8 | 60 | 60 | 60 | 60 | 4 | 1319 555 |
| | Outer | 6-8 | 60 | 60 | 60 | 60 | 4 | 1319 554 |
| | Front Shock Absorber Upper Mounting Bushing | 6-8 | 60 | 60 | 60 | 60 | 4 | 1558 352 |
| 17-23-56 | STUD, Rear Shock Absorber, Upper | 6-8 | 60 | 60 | 60 | 60 | 2 | 1948 884 |
| | BOLT, Front Shock Absorber Lower Mounting. | 6-8 | 60 | 60 | 60 | 60 | 2 | 1736 997 |
| 17-23-57 | NUT, Rear Shock Absorber Upper Stud | 6-8 | 60 | 60 | 60 | 60 | 2 | 1948 350 |
| **17-24-0** | **SHOCK ABSORBER BRACKET** | | | | | | | |
| 17-24-28 | SUPPORT, Frame Front Shock Absorber | 6-8 | 60 | 60 | 60 | 60 | 2 | 1675 821 |
| **17-26-0** | **SHOCK ABSORBER COMPONENT PARTS** | | | | | | | |
| 17-26-12 | NUT, Piston Rod, Rear, PC1, PC2, PC3 | 6-8 | 60 | 60 | 60 | 60 | 2 | 1314 336 |
| 17-26-19 | GUIDE, Piston Rod, Rear, Heavy Duty, PC1, PC2, PC3 | 6-8 | 60 | 60 | 60 | 60 | 2 | 1313 740 |
| 17-26-28 | CAP, Piston Rod Guide Oil Seal, Rear, Heavy Duty, PC1, PC2, PC3 | 6-8 | 60 | 60 | 60 | 60 | 2 | 1313 735 |
| 17-26-38 | PLATE, Piston Orifice, Rear, Heavy Duty, PC1, PC2, PC3 | 6-8 | 60 | 60 | 60 | 60 | 2 | 1265 840 |
| **17-29-0** | **SWAY ELIMINATOR SHAFT** | | | | | | | |
| 17-29-5 | SHAFT, PD1, PD2, PD4, PC1 | 6-8 | 60 | 60 | 60 | 60 | 1 | 1671 437 |
| | PD3 Sub. | 6 | - | 60 | - | - | 1 | 1671 437 |
| | PC2, PC3, PY1 | 8 | - | - | - | 60 | 1 | 1672 964 |
| 17-29-6 | BRACKET, Frame, PD1, PD2, PD4, PC1 | 6-8 | 60 | 60 | 60 | 60 | 2 | 1824 879 |
| | PD3 Sub. | 6 | - | 60 | - | - | 2 | 1824 879 |
| 17-29-10 | STRAP, Bushing, PD1, PD2, PD4 | 6-8 | 60 | 60 | 60 | 60 | 2 | 1673 065 |
| | PD3 Sub. | 6 | - | 60 | - | - | 2 | 1673 065 |
| 17-29-11 | RETAINER, Bushing, PD1, PD2, PD4 | 6-8 | 60 | 60 | 60 | 60 | 2 | 1673 060 |
| | PD3 Sub. | 6 | - | 60 | - | - | 2 | 1673 060 |
| 17-29-12 | BUSHING, PD1, PD2, PD4, PC1 | 6-8 | 60 | 60 | 60 | 60 | 2 | 1824 936 |
| | PD3 Sub. | 6 | - | 60 | - | - | 2 | 1824 936 |
| | PC2, PC3, Std. | 8 | - | - | - | 60 | 2 | 1824 936 |
| | PC2, PC3, Heavy Duty, PY1 | 8 | - | - | - | 60 | 2 | 1824 935 |
| 17-29-13 | REINFORCEMENT, Cushion, PD1, PD2, PD4 | 6-8 | 60 | 60 | 60 | 60 | 2 | 1672 989 |
| | PD3 Sub. | 6 | - | 60 | - | - | 2 | 1672 989 |
| 17-29-14 | BOLT, Cushion Strap, PD1, PD2, PD4 | 6-8 | 60 | 60 | 60 | 60 | 2 | 1824 934 |
| | PD3 Sub. | 6 | - | 60 | - | - | 2 | 1824 934 |
| 17-29-15 | CUSHION, PD1, PD2, PD4, PC1 | 6-8 | 60 | 60 | 60 | 60 | 2 | 1673 090 |
| | PD3 Sub. | 6 | - | 60 | - | - | 2 | 1673 090 |
| | PC2, PC3, Std. | 8 | - | - | - | 60 | 2 | 1673 090 |
| | PC2, PC3, Heavy Duty, PY1 | 8 | - | - | - | 60 | 2 | 1731 341 |
| 17-29-16 | RETAINER, Cushion, PD1, PD2, PD4 | 6-8 | 60 | 60 | 60 | 60 | 2 | 1672 988 |
| | PD3 Sub. | 6 | - | 60 | - | - | 2 | 1672 988 |
| 17-29-18 | STRAP, Cushion, PD1, PD2, PD4 | 6-8 | 60 | 60 | 60 | 60 | 2 | 1731 275 |
| | PD3 Sub. | 6 | - | 60 | - | - | 2 | 1731 275 |
| 17-29-20 | INSULATOR, Link, PD1, PD2, PD4 | 6-8 | 60 | 60 | 60 | 60 | 2 | 1734 315 |
| | PD3 Sub. | 6 | - | 60 | - | - | 2 | 1734 315 |
| 17-29-21 | RETAINER, Insulator, PD1, PD2, PD4 | 6-8 | 60 | 60 | 60 | 60 | 4 | 1558 352 |
| | PD3 Sub. | 6 | - | 60 | - | - | 4 | 1558 352 |

## NOTES



MyMopar.com

| CODE | PART NAME AND DESCRIPTION | NO. OF CYL. | PLYMOUTH | DODGE | DESOTO | CHRYSLER AND IMPERIAL | PER CAR | PART NUMBER |
|---|---|---|---|---|---|---|---|---|

## NOTES


MyMopar.com

# GROUP 18 - STANDARD PARTS

The Standard Parts listed herein are furnished only in carton quantities, and should be ordered in these quantities or multiples thereof.

## BALL - STEEL



Plate 18-1

| Diameter | Part No. | Ctn. Qty. | Diameter | Part No. | Ctn. Qty. |
|---|---|---|---|---|---|
| 1/8 | 115 529 | 50 | 3/8 | 104 920 | 25 |
| 5/32 | 115 527 | 50 | 7/16 | 104 921 | 25 |
| 3/16 | 104 916 | 50 | 1/2 | 104 922 | 10 |
| 7/32 | 104 917 | 50 | 9/16 | 104 923 | 10 |
| 1/4 | 104 918 | 50 | 5/8 | 104 924 | 10 |
| 5/16 | 104 919 | 50 | 7/8 | 104 927 | 5 |
| 11/32 | 119 282 | 25 | | | |

## BOLT - HEXAGON HEAD

National Coarse Thread

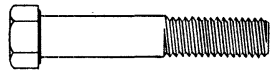

Plate 18-2

| | Diameter & Thread | | | | | | | | | | | |
|---|---|---|---|---|---|---|---|---|---|---|---|---|
| | 1/4-20 | | 5/16-18 | | 3/8-16 | | 7/16-14 | | 1/2-13 | | 9/16-12 | |
| Length | Part No. | Carton Qty. | Part No. | Carton Qty. | Part No. | Carton Qty. | Part No. | Carton Qty. | Part No. | Carton Qty. | Part No. | Carton Qty. |
| 1/2 | 180 016 | 50 | | | 180 116 | 25 | | | 180 166 | 25 | | |
| 5/8 | 180 018 | 100 | | | | | | | | | | |
| 3/4 | 180 020 | 50 | 180 077 | 25 | | | 180 143 | 25 | | | 180 197 | 10 |
| 1 | 180 022 | 50 | 180 079 | 25 | 180 122 | 25 | | | | | 180 199 | 10 |
| 1-1/4 | 180 024 | 50 | 180 081 | 25 | 180 124 | 25 | 180 147 | 25 | 180 175 | 10 | 180 201 | 10 |
| 1-1/2 | 180 034 | 25 | 180 083 | 25 | 180 126 | 25 | 180 149 | 10 | | | 180 207 | 10 |
| 1-3/4 | | | 180 085 | 25 | | | 180 151 | 10 | | | 180 212 | 10 |
| 2 | | | | | 180 130 | 25 | | | 180 181 | 10 | | |
| 2-1/2 | 180 048 | 10 | 122 077 | 25 | | | 180 157 | 10 | | | | |
| 3 | | | 180 113 | 10 | | | 180 160 | 10 | 180 190 | 10 | | |
| 3-1/2 | | | | | | | | | | | 180 238 | 10 |
| 3-3/4 | | | | | 186 284 | 10 | | | | | | |
| 4 | | | 189 298 | 10 | 186 285 | 10 | 180 165 | 10 | | | | |
| 5 | | | | | | | 272 406 | 50 | | | | |

## BOLT - HEXAGON HEAD

National Fine Thread

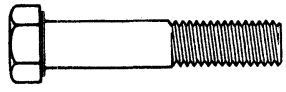

| | Diameter & Thread | | | | | | | | | | | |
|---|---|---|---|---|---|---|---|---|---|---|---|---|
| | 1/4-28 | | 5/16-24 | | 3/8-24 | | 7/16-20 | | 1/2-20 | | 9/16-18 | |
| Length | Part No. | Carton Qty. | Part No. | Carton Qty. | Part No. | Carton Qty. | Part No. | Carton Qty. | Part No. | Carton Qty. | Part No. | Carton Qty. |
| 1/2 | 181 561 | 50 | | | 181 627 | 25 | | | 181 683 | 25 | | |
| 5/8 | | | 181 593 | 25 | | | | | | | | |
| 3/4 | | | 181 595 | 25 | | | | | | | | |
| 1 | 181 568 | 50 | 181 608 | 25 | 181 637 | 25 | | | 181 696 | 25 | | |
| 1-1/4 | | | 181 610 | 25 | 181 639 | 25 | 181 668 | 25 | 181 698 | 10 | | |
| 1-1/2 | | | 181 614 | 25 | 181 643 | 25 | 181 670 | 10 | 181 700 | 10 | 181 727 | 10 |
| 1-3/4 | 181 577 | 25 | | | 181 646 | 25 | 181 672 | 10 | 660 378 | 10 | | |
| 2 | 181 579 | 25 | 181 620 | 25 | 181 648 | 25 | 181 674 | 10 | 181 705 | 10 | 181 731 | 10 |
| 2-1/4 | | | | | | | | | | | 181 732 | 10 |
| 2-1/2 | | | | | 181 650 | 10 | | | 181 709 | 10 | | |
| 2-3/4 | | | 181 623 | 10 | | | | | | | | |
| 3 | | | 182 703 | 10 | 181 652 | 10 | 181 678 | 10 | 181 711 | 10 | 181 735 | 10 |
| | | | | | 186 310 | 10 | 181 680 | 10 | 182 788 | 10 | | |
| 4 | | | | | | | 181 682 | 10 | 181 715 | 10 | 181 747 | 10 |
| 4-1/4 | | | | | | | 187 612 | 10 | | | | |



▲ - Indicates bright finish.

MyMopar.com

### BUSHING
Pipe Reducing

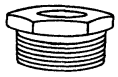

Plate 18-4

| Ext. Thd. | Int. Thd. | Part No. | Carton Qty. |
|---|---|---|---|
| 1/4 | 1/8 | 119 930 | 5 |
| 3/8 | 1/8 | 119 923 | 5 |
| 3/8 | 1/4 | 119 931 | 5 |
| 1/2 | 1/8 | 144 037 | 5 |
| 1/2 | 1/4 | 144 051 | 5 |
| 1/2 | 3/8 | 120 322 | 5 |

### CONNECTOR
Flared Tube

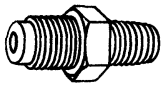

Plate 18-6

| Diameter | Taper Thd. | Thread | Part No. | Carton Qty. |
|---|---|---|---|---|
| 1/4 | 1/8 | 7/16-20 | 118 748 | 5 |
| 5/16 | 1/8 | 1/2-20 | 118 749 | 5 |
| 3/8 | 1/4 | 5/8-20 | 118 750 | 5 |
| 7/16 | 1/4 | 11/16-16 | 118 751 | 5 |
| 1/2 | 3/8 | 3/4-16 | 118 752 | 5 |

### COUPLING - PIPE

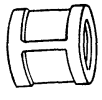

Plate 18-8

| Diameter & Thread | Part No. | Carton Qty. |
|---|---|---|
| 1/8 x .96 | 105 408 | 5 |

### ELBOW
Ball, Sleeve Tubing

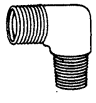

Plate 18-10

| Diameter | Taper Thd. | Thread | Part No. | Carton Qty. |
|---|---|---|---|---|
| 1/4 | 1/8 | 7/16-24 | 114 632 | 10 |
| 5/16 | 1/8 | 1/2-24 | 114 633 | 10 |
| 3/8 | 1/4 | 9/16-24 | 140 305 | 10 |

### ELBOW
Inverted Flared Tube, 45 Degree

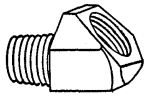

Plate 18-12

| Diameter | Taper Thd. | Thread | Part No. | Carton Qty. |
|---|---|---|---|---|
| 3/16 | 1/8 | 3/8-24 | 127 829 | 5 |
| 1/4 | 1/8 | 7/16-24 | 125 859 | 5 |
| 5/16 | 1/8 | 1/2-20 | 116 341 | 5 |
| 3/8 | 1/4 | 5/8-18 | 143 338 | 5 |

### CONNECTOR
Ball Sleeve Tubing

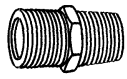

Plate 18-5

| Tube Dia. | Taper Thd. | Thd. Size | Part No. | Carton Qty. |
|---|---|---|---|---|
| 3/16 | 1/8 | 3/8-24 | 121 711 | 10 |
| 1/4 | 1/8 | 7/16-24 | 114 626 | 10 |
| 5/16 | 1/8 | 1/2-24 | 114 629 | 10 |
| 3/8 | 1/4 | 17/32-24 | 114 625 | 5 |
| 1/2 | 3/8 | 11/16-24 | 120 129 | 5 |

### CONNECTOR
Inverted Flared Tube

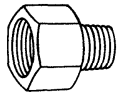

Plate 18-7

| Diameter | Taper Thd. | Thread | Part No. | Carton Qty. |
|---|---|---|---|---|
| 1/8 | 1/8 | 5/16-28 | 137 403 | 5 |
| 1/4 | 1/8 | 7/16-24 | 111 345 | 5 |
| 5/16 | 1/8 | 1/2-20 | 137 406 | 5 |
| 3/8 | 1/4 | 5/8-18 | 137 407 | 5 |
| 1/2 | 3/8 | 3/4-18 | 143 426 | 5 |

### DRAIN COCK



Plate 18-9

| Diameter | Part No. | Carton Qty. |
|---|---|---|
| 1/4 | 103 647 | 5 |

### ELBOW
Flared Tube



Plate 18-11

| Diameter | Taper Thd. | Thread | Part No. | Carton Qty. |
|---|---|---|---|---|
| 3/16 | 1/8 | 3/8-24 | 121 339 | 5 |
| 1/4 | 1/8 | 7/16-20 | 118 753 | 5 |
| 5/16 | 1/8 | 1/2-20 | 118 754 | 5 |

### ELBOW
Inverted Flared Tube, 90 Degree



Plate 18-13

| Diameter | Taper Thd. | Thread | Part No. | Carton Qty. |
|---|---|---|---|---|
| 3/16 | 1/8 | 3/8-24 | 137 420 | 5 |
| 1/4 | 1/8 | 7/16-24 | 137 421 | 5 |
| 1/4 | 1/4 | 7/16-24 | 143 342 | 5 |
| 5/16 | 1/8 | 3/8-20 | 137 422 | 5 |
| 5/16 | 1/4 | 1/2-18 | 143 343 | 5 |
| 3/8 | 1/4 | 5/8-18 | 137 423 | 5 |
| 7/16 | 1/4 | 11/16-18 | 137 424 | 5 |
| 1/2 | 1/4 | | 188 947 | 5 |


MyMopar.com
▲ - Indicates bright finish.

**ELBOW**
Pipe, 90 Degree



Plate 18-14

| Diameter | Part No. | Carton Qty. |
|---|---|---|
| 1/8 | 119 455 | 5 |
| 1/4 | 105 413 | 5 |

**FITTING - LUBRICATING**

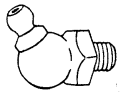

Plate 18-16

| Thread & Length | | Part No. | Carton Qty. |
|---|---|---|---|
| 1/8 x 1-3/16 | 67-1/2° | 109 365 | 5 |
| 1/8 x 1-13/16 | 90° | 109 357 | 5 |

**FITTING - LUBRICATING**
Straight Drive Base

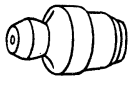

Plate 18-18

| Diameter & Length | Part No. | Carton Qty. |
|---|---|---|
| .311 x 5/8 | 119 516 | 10 |

**FITTING - LUBRICATING**
Straight Type and Threaded Drive Type

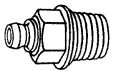

Plate 18-20

| Dia. & Length | Part No. | Carton Qty. |
|---|---|---|
| 1/8 x 23/32 | 9411 022 | 10 |

**FITTING - LUBRICATING**
Threaded Drive Type



Plate 18-22

| Length | | Part No. | Carton Qty. |
|---|---|---|---|
| 1 | 30° | 145 434 | 10 |
| 47/64 | 85° | 9411 025 | 10 |
| 25/32 | 67-1/2° | 273 323 | 10 |

**ELBOW**
Street, 90 Degree

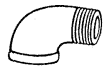

Plate 18-15

| Diameter | Part No. | Carton Qty. |
|---|---|---|
| 1/8 | 127 960 | 5 |
| 1/4 | 120 499 | 5 |

**FITTING - LUBRICATING**
Ball and Spring Type



Plate 18-17

| Length | Diameter & Thread | Part No. | Carton Qty. |
|---|---|---|---|
| 7/8 | 1/4-28 | 110 309 | 10 |
| 1 | 1/4-28 | 110 308 | 10 |

**FITTING - LUBRICATING**
Straight Type

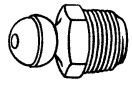

Plate 18-19

| Thread & Length | Part No. | Carton Qty. |
|---|---|---|
| 1/8 x 43/64 | 9411 010 | 10 |

**FITTING - LUBRICATING**
Straight Type C

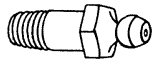

Plate 18-21

| Length | Dia. & Thread 1/4-20 Part No. | Carton Qty. |
|---|---|---|
| 1/2 | 110 347 | 10 |
| 11/16 | 111 595 | 10 |
| 15/16 | 125 846 | 5 |
| 1-1/8 | 128 274 | 5 |

**GASKET**
ANNULAR, TYPE A

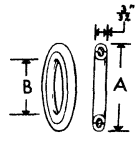


Plate 18-23

| Dim. "A" | Dim. "B" | Part No. | Carton Qty. |
|---|---|---|---|
| 1 1/8 | .890 | 105 456 | 50 |


MyMopar.com

### GASKET
ANNULAR, TYPE C

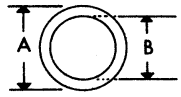


Plate 18-24

| Dim. "A" | Dim. "B" | Part No. | Carton Qty. |
|---|---|---|---|
| 25/32 | .561 | 150 189 | 100 |

### NUT
Flared Tube

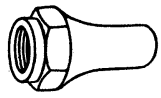

Plate 18-26

| Tube Dia. | Thread | Part No. | Carton Qty. |
|---|---|---|---|
| 5/16 | 1/2-20 | 118 538 | 5 |
| 7/16 | 11/16-16 | 118 540 | 5 |

### NUT - HEXAGON

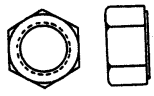

Plate 18-28

| Diameter & Thread | Part No. | Carton Qty. |
|---|---|---|
| 3/4-16 | 426 099 | 10 |

### NUT - HEXAGON
Lock, Standard, Semi - Finished

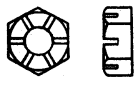

Plate 18-30

| Diameter & Thread | Part No. | Carton Qty. |
|---|---|---|
| 7/16-14 | 126 012 | 50 |

### NUT - HEXAGON
Common



Plate 18-32

| Thread & Length | Part No. | Carton Qty. |
|---|---|---|
| No. 8-32 | 120 622 | 100 |
| No. 10-24 | 151 497 | 100 |
| No. 12-24 | 121 743 | 100 |

### NIPPLE - PIPE

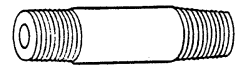

Plate 18-25

| Dia. & Length | Part No. | Carton Qty. |
|---|---|---|
| 1/8 x 1 | 137 536 | 10 |
| 1/4 x 1-1/2 | 144 596 | 5 |

### NUT - HEXAGON



Plate 18-27

| Diameter & Thread | Part No. | Carton Qty. |
|---|---|---|
| 3/4-16 | 219 753 | 10 |

### NUT - HEXAGON
Lock, Thin, Semi - Finished



Plate 18-29

| Diameter & Thread | Part No. | Carton Qty. |
|---|---|---|
| 5/8-18 | 145 013 | 10 |

### NUT - HEXAGON
Ball Sleeve Tubing



Plate 18-31

| Tube Dia. | Thread | Part No. | Carton Qty. |
|---|---|---|---|
| 3/16 | 3/8-24 | 120 487 | 10 |
| 5/16 | 1/2-24 | 114 630 | 10 |
| 3/8 | 9/16-24 | 140 287 | 10 |
| 3/4 | 1-28 | 144 409 | 5 |

### NUT - HEXAGON
Slotted, Standard Semi - Finished



Plate 18-33

| Diameter & Thread | Part No. | Carton Qty. |
|---|---|---|
| 3/8-24 | 125 233 | 50 |
| 7/16-20 | 128 014 | 50 |
| 9/16-18 | 128 178 | 25 |
| 5/8-18 | 128 027 | 25 |


MyMopar.com
▲ - Indicates bright finish.

### NUT - HEXAGON
Standard, Semi-Finished National Coarse Thread



Plate 18-34

| Diameter & Thread | Part No. | Carton Qty. |
|---|---|---|
| 1/4-20 | 120 375 | 50 |
| 5/16-18 | 120 376 | 50 |
| 3/8-16 | 120 377 | 50 |
| 7/16-14 | 271 501 | 50 |
| 1/2-13 | 120 378 | 50 |
| 9/16-12 | 124 583 | 25 |
| 5/8-11 | 124 589 | 25 |

### NUT
Inverted Flared Tube



Plate 18-36

| Tube Dia. | Thread | Part No. | Carton Qty. |
|---|---|---|---|
| 1/8 | 5/16-24 | 137 395 | 50 |
| 3/16 | 3/8-24 | 137 396 | 50 |
| 1/4 | 7/16-24 | 137 397 | 50 |
| 5/16 | 1/2-20 | 137 398 | 25 |
| 3/8 | 5/8-18 | 137 399 | 25 |

### PIN - COTTER
Split

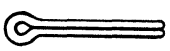

Plate 18-38

| Length | Diameter | Part No. | Carton Qty. |
|---|---|---|---|
| 1/2 | 3/64 | 114 856 | 100 |
| 3/4 | 3/32 | 103 373 | 100 |
| 7/8 | 1/8 | 108 630 | 100 |
| 1 | 1/16 | 103 363 | 100 |
| 1 | 5/32 | 103 396 | 100 |
| 1-1/8 | 3/32 | 108 636 | 100 |
| 1-3/8 | 1/16 | 108 640 | 100 |
| 1-5/8 | 1/8 | 119 209 | 100 |
| 1-5/8 | 5/32 | 119 210 | 100 |
| 1-5/8 | 3/16 | 137 254 | 100 |
| 1-3/4 | 1/8 | 190 381 | 100 |
| 1-3/4 | 5/32 | 103 399 | 100 |
| 2-1/2 | 3/32 | 103 380 | 100 |
| 3 | 3/16 | 103 415 | 50 |
| 3 | 7/32 | 137 298 | 50 |

### PIN
Straight, Grooved

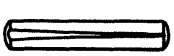

Plate 18-40

| Diameter | Length | Part No. | Carton Qty. |
|---|---|---|---|
| 1/4 | 1 | 142 520 | 10 |

### NUT - HEXAGON
Standard, Semi-Finished National Fine Thread



Plate 18-35

| Diameter & Thread | Part No. | Carton Qty. |
|---|---|---|
| 1/4-28 | 120 367 | 50 |
| 5/16-24 | 120 368 | 50 |
| 3/8-24 | 114 547 | 25 |
| 3/8-24 | 120 369 | 50 |
| 7/16-20 | 271 506 | 50 |
| 1/2-20 | 120 371 | 50 |
| 9/16-18 | 124 634 | 25 |

### NUT - HEXAGON
Tri-Slot, Semi-Finished



Plate 18-37

| Diameter & Thread | Part No. | Carton Qty. |
|---|---|---|
| 3/4-16 | 128 180 | 5 |

### PIN - DOWEL

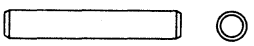

Plate 18-39

| Diameter | Length | Part No. | Carton Qty. |
|---|---|---|---|
| 1/4 | 2-1/4 | 141 210 | 10 |
| 5/16 | 2-1/4 | 141 232 | 10 |

### PLUG - BUTTON

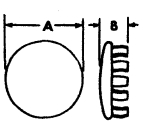


Plate 18-41

| Dim. "A" | Dim. "B" | Part No. | Carton Qty. |
|---|---|---|---|
| 1 | 19/64 | 142 093 | 10 |

Printed in U.S.A.
▲ - Indicates bright finish.



MyMopar.com

## PLUG - EXPANSION



Plate 18-42

| Diameter | Part No. | Carton Qty. |
|---|---|---|
| 1/4 | 106 959 | 25 |
| 7/16 | 117 917 | 25 |
| 9/16 | 117 918 | 25 |
| 5/8 | 103 891 | 25 |
| 3/4 | 103 892 | 25 |
| 13/16 | 105 602 | 25 |
| 7/8 | 103 893 | 25 |
| 15/16 | 117 919 | 25 |
| 1-1/16 | 117 920 | 10 |
| 1-1/8 | 106 517 | 10 |
| 1-3/16 | 140 690 | 10 |
| 1-3/16 | 117 921 | 10 |
| 1-1/4 | 179 380 | 10 |
| 1-3/8 | 117 923 | 10 |
| 1-7/16 | 105 603 | 10 |
| 1-1/2 | 103 896 | 10 |
| 1-5/8 | 117 924 | 10 |
| 1-5/8 | 140 802 | 10 |
| 1-3/4 | 103 897 | 10 |
| 1-7/8 | 114 564 | 10 |
| 2 | 140 089 | 10 |
| 2-1/4 | 113 537 | 10 |
| 2-1/2 | 103 899 | 10 |

## PLUG - PIPE
Countersunk Headless



Plate 18-43

| Diameter & Thread | Part No. | Carton Qty. |
|---|---|---|
| 1/2 - 14 | 103 874 | 5 |
| 3/8 - 18 | 143 162 | 10 |
| 3/4 - 14 | 103 875 | 5 |

## PLUG - PIPE
Slotted Headless



Plate 18-45

| Diameter & Thread | Part No. | Carton Qty. |
|---|---|---|
| 1/8 - 27 | 118 831 | 10 |
| 3/8 - 18 | 115 711 | 10 |

## PLUG - PIPE
Square Head, Solid

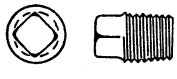

Plate 18-47

| Diameter & Thread | Part No. | Carton Qty. |
|---|---|---|
| 1/8 - 27 | 143 932 | 25 |
| 1/4 - 18 | 143 933 | 25 |

## PLUG - PIPE
Square Head, Hollow

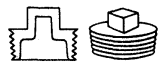

Plate 18-46

| Diameter & Thread | Part No. | Carton Qty. |
|---|---|---|
| 3/8 - 18 | 112 304 | 5 |
| 1/2 - 14 | 103 868 | 10 |
| 3/4 - 14 | 103 869 | 5 |
| 1 - 11 1/2 | 103 870 | 5 |
| 1 1/4 - 11 1/2 | 106 642 | 5 |

## RING

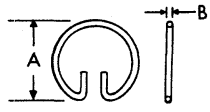


Plate 18-48

| Dim. "A" | Dim. "B" | Part No. | Carton Qty. |
|---|---|---|---|
| .990 | .0605 | 200 434 | 24 |


MyMopar.com
▲ - Indicates bright finish.

**RIVET - TUBULAR**
Flat Head, Countersunk

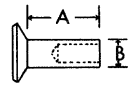


Plate 18-49

| Dim. "A" | Dim. "B" | Part No. | Carton Qty. |
|---|---|---|---|
| 9/32 | 9/64 | 121 573 | 100 |
| 13/32 | 3/16 | 114 518 | 100 |

**RIVET**
Split, Oval Head



Plate 18-51

| Diameter | Length | Part No. | Carton Qty. |
|---|---|---|---|
| 9/64 | 7/16 | 113 194 | 100 |

**SCREW - TAPPING**
Cross Recess, National Coarse Thread

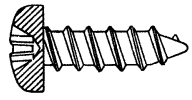

Plate 18-53

| Diameter & Thread | Length | Part No. | Carton Qty. |
|---|---|---|---|
| No. 14-10 | 3/4 | 162 077 | 100 |

**SCREW - FILLISTER HEAD**
Cross Recess, National Fine Thread

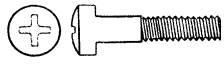

Plate 18-55

| | Diameter and Thread | | | |
|---|---|---|---|---|
| | No. 6-32 | | No. 10-32 | |
| Length | Part No. | Carton Qty. | Part No. | Carton Qty. |
| 1/2 | | | 153 421 | 100 |
| 1-1/2 | | | 153 479 | 50 |

**RIVET**
Solid, Round Head

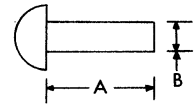


| Dim. "A" | Dim. "B" | Part No. | Carton Qty. |
|---|---|---|---|
| 5/8 | 3/16 | 108 682 | 100 |

**RIVET - TUBULAR**
Oval Head, Drilled

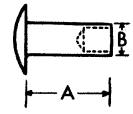


Plate 18-52

| Dim. "A" | Dim. "B" | Part No. | Carton Qty. |
|---|---|---|---|
| 9/64" | 1/4" | 118 140 | 100 |
| 3/16" | 3/32" | 131 284 | 100 |

**SCREW - FILLISTER HEAD**
Cross Recess, National Coarse Thread

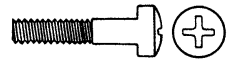

Plate 18-54

| | Diameter & Thread | | | |
|---|---|---|---|---|
| | No. 10-24 | | 5/16-18 | |
| Length | Part No. | Carton Qty. | Part No. | Carton Qty. |
| 7/16 | ▲153 241 | 100 | | |
| 3/4 | | | ▲153 966 | 100 |
| 7/8 | | | ▲153 981 | 100 |
| 1-1/4 | | | ▲154 002 | 50 |

**SCREW**
Fillister Head, Slotted

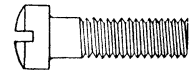

Plate 18-56

| Diameter & Thread | Length | Part No. | Carton Qty. |
|---|---|---|---|
| 1/4-20 | 2 1/2 | 132 300 | 100 |

**SCREW - FLAT HEAD**
Cross Recess, National Coarse Thread

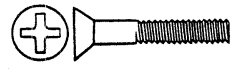

Plate 18-57

| | Diameter & Thread | | | | | | | | | | | | | |
|---|---|---|---|---|---|---|---|---|---|---|---|---|---|---|
| | No. 4-40 | | No. 6-32 | | No. 8-32 | | No. 10-24 | | No. 12-24 | | 1/4-20 | | 5/16-18 | | 3/8-16 | |
| Length | Part No. | Ctn. Qty. | Part No. | Ctn. Qty. | Part No. | Ctn. Qty. | Part No. | Ctn. Qty. | Part No. | Ctn. Qty. | Part No. | Ctn. Qty. | Part No. | Ctn. Qty. | Part No. | Ctn. Qty. |
| 3/16 | | | | | ▲155 864 | 100 | | | | | | | | | | |
| 1/4 | 155 815 | 100 | 155 830 | 100 | | | | | | | | | | | | |
| 5/16 | ▲155 821 | 100 | 155 835 | 100 | ▲155 873 | 100 | | | | | | | | | | |
| 3/8 | 188 333 | 100 | 157 884 | 100 | | | | | | | | | | | | |
| 7/16 | | | | | | | ▲155 934 | 100 | | | | | | | | |
| 1/2 | | | | | 155 886 | 100 | | | 156 094 | 100 | | | | | | |
| 5/8 | | | | | | | | | | | ▲156 250 | 100 | | | | |
| 3/4 | | | 155 857 | 100 | | | | | | | | | | | | |
| 1 | | | | | | | 155 954 | 100 | ▲156 132 | 100 | | | | | 156 549 | 50 |

MyMopar.com


▲ - Indicates bright finish.

**SCREW - FLAT HEAD**
Cross Recess, National Fine Thread

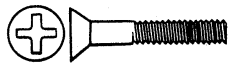

Plate 18-58

| Length | Diameter and Thread No. 10-32 Part No. | Carton Qty. | 5/16-24 Part No. | Carton Qty. |
|---|---|---|---|---|
| 1/2 | 156 009 | 100 | | |
| 1 | 156 033 | 100 | 178 837 | 50 |

**SCREW - OVAL HEAD**
Cross Recess, National Coarse Thread



Plate 18-59

| Length | Diameter & Thread No. 6-32 Part No. | Carton Qty | No. 8-32 Part No. | Carton Qty. | No. 10-24 Part No. | Carton Qty. | No. 12-24 Part No. | Carton Qty. | 1/4-20 Part No. | Carton Qty. | 5/16-18 Part No. | Carton Qty. |
|---|---|---|---|---|---|---|---|---|---|---|---|---|
| 1/4 | | | ▲156 746 | 50 | | | | | | | | |
| 5/16 | 442 654 | 50 | | | | | | | | | | |
| 3/8 | 156 646 | 100 | | | | | | | | | | |
| 7/16 | | | | | ▲156 960 | 100 | | | | | | |
| 1/2 | | | ▲156 771 | 50 | 156 963 | 100 | 157 277 | 100 | 157 391 | 100 | | |
| 5/8 | | | ▲147 762 | 50 | ▲148 109 | 100 | 157 285 | 100 | 157 399 | 100 | | |
| 3/4 | | | | | | | 157 296 | 100 | | | | |
| 3/4 | | | 186 575 | 100 | | | ▲ 157 297 | 100 | ▲ 157 402 | 100 | | |
| 7/8 | | | | | 156 972 | 100 | | | ▲ 148 035 | 100 | | |
| 1 | | | | | | | 157 321 | 100 | 157 444 | 100 | | |
| 1-1/2 | | | ▲156 831 | 50 | | | | | | | | |

**SCREW - OVAL HEAD**
Cross Recess, National Fine Thread



Plate 18-60

| Length | Diameter and Thread No. 10-32 Part No. | Carton Qty. | 1/4-28 Part No. | Carton Qty. |
|---|---|---|---|---|
| 1/2 | 157 070 | 100 | | |
| 5/8 | 188 026 | 100 | | |
| 3/4 | ▲ 147 721 | 100 | | |
| 7/8 | | | 187 981 | 100 |

**SCREW - ROUND HEAD**
Cross Recess, National Coarse Thread

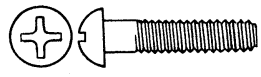

Plate 18-61

| Length | Diameter & Thread No. 4-40 Part No. | Carton Qty. | No. 6-32 Part No. | Carton Qty. | No. 8-32 Part No. | Carton Qty. | No. 10-24 Part No. | Carton Qty. | No. 12-24 Part No. | Carton Qty. | 1/4-20 Part No. | Carton Qty. |
|---|---|---|---|---|---|---|---|---|---|---|---|---|
| 1/4 | 154 921 | 100 | 154 959 | 100 | | | | | | | | |
| 5/16 | 154 926 | 100 | | | 155 028 | 100 | | | | | | |
| 3/8 | | | | | | | | | 155 258 | 100 | | |
| 1/2 | | | 154 987 | 100 | 155 043 | 100 | 155 113 | 100 | | | | |
| 3/4 | | | | | | | | | 155 278 | 100 | 155 348 | 100 |
| 1 | | | | | 188 764 | 25 | | | 155 288 | 100 | ▲147 766 | 50 |


MyMopar.com
▲ - Indicates bright finish.

### SCREW - ROUND HEAD
Cross Recess, National Fine Thread

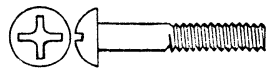

Plate 18-62

Diameter and Thread
No. 10-32

| Length | Part No. | Carton Qty. |
|---|---|---|
| 5/16 | 155 178 | 100 |
| 1/2 | ▲155 194 | 100 |
| 3 | 155 032 | 100 |

### STUD

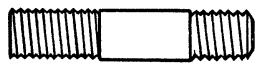

Plate 18-64

| Stud End Dia. & Thread | Nut End Dia. & Thread | Length | Part No. | Ctn. Qty. |
|---|---|---|---|---|
| 3/8-16 | 3/8-24 | 3-5/16 | 103 203 | 5 |
| 3/8-16 | 3/8-24 | 5-13/16 | 111 647 | 5 |

### WASHER - LOCK



Plate 18-66

| Bolt Size | Part No. | Carton Qty. |
|---|---|---|
| 1/4 | 120 380 | 100 |
| 5/16 | 120 214 | 100 |
| 3/8 | 120 382 | 100 |
| 1/2 | 120 384 | 100 |
| 9/16 | 120 898 | 50 |
| 5/8 | 121 574 | 50 |

### SLEEVE
Ball Sleeve Tubing



Plate 18-63

| Diameter | Part No. | Carton Qty. |
|---|---|---|
| 1/8 | 121 322 | 25 |
| 1/4 | 114 628 | 25 |
| 5/16 | 114 631 | 25 |
| 3/8 | 114 624 | 25 |
| 3/4 | 125 654 | 25 |

### WASHER - LOCK
Countersunk, External Tooth

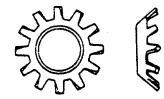

Plate 18-65

| Bolt Size | I. D. | Part No. | Ctn. Qty. |
|---|---|---|---|
| 3/8 | .398 | 138 617 | 100 |

### WASHER - LOCK
External and Internal Teeth



Plate 18-67

| Bolt Size | Part No. | Carton Qty. |
|---|---|---|
| 1/4 | 174 916 | 50 |
| 5/16 | 178 532 | 50 |
| 3/8 | 178 551 | 50 |
| 7/16 | 178 571 | 50 |
| 9/16 | 178 612 | 25 |
| 5/8 | 178 632 | 25 |


MyMopar.com

### WASHER - LOCK
External Teeth



Plate 18-68

| Bolt Size | Part No. | Carton Qty. |
|---|---|---|
| 1/4 | 121 753 | 100 |
| 5/16 | 138 485 | 100 |
| 3/8 | 138 489 | 100 |
| 7/16 | 136 857 | 50 |
| 1/2 | 135 629 | 100 |
| 9/16 | 138 498 | 50 |
| 5/8 | 138 502 | 50 |

### WASHER - PLAIN
Small



Plate 18-70

| Bolt Size | Part No. | Carton Qty. |
|---|---|---|
| 1/4 | 120 392 | 100 |
| 5/16 | 120 387 | 100 |
| 3/8 | 120 394 | 100 |
| 7/16 | 120 395 | 100 |
| 1/2 | 120 396 | 50 |
| 9/16 | 121 458 | 50 |
| 5/8 | 131 016 | 50 |

### WASHER - PLAIN
Large

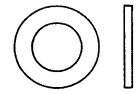

Plate 18-69

| Bolt Size | Part No. | Carton Qty. |
|---|---|---|
| 1/4 | 147 697 | 100 |
| 5/16 | 120 387 | 100 |
| 3/8 | 128 051 | 50 |
| 1/2 | 126 335 | 50 |

## NOTES


MyMopar.com
▲ - Indicates bright finish.

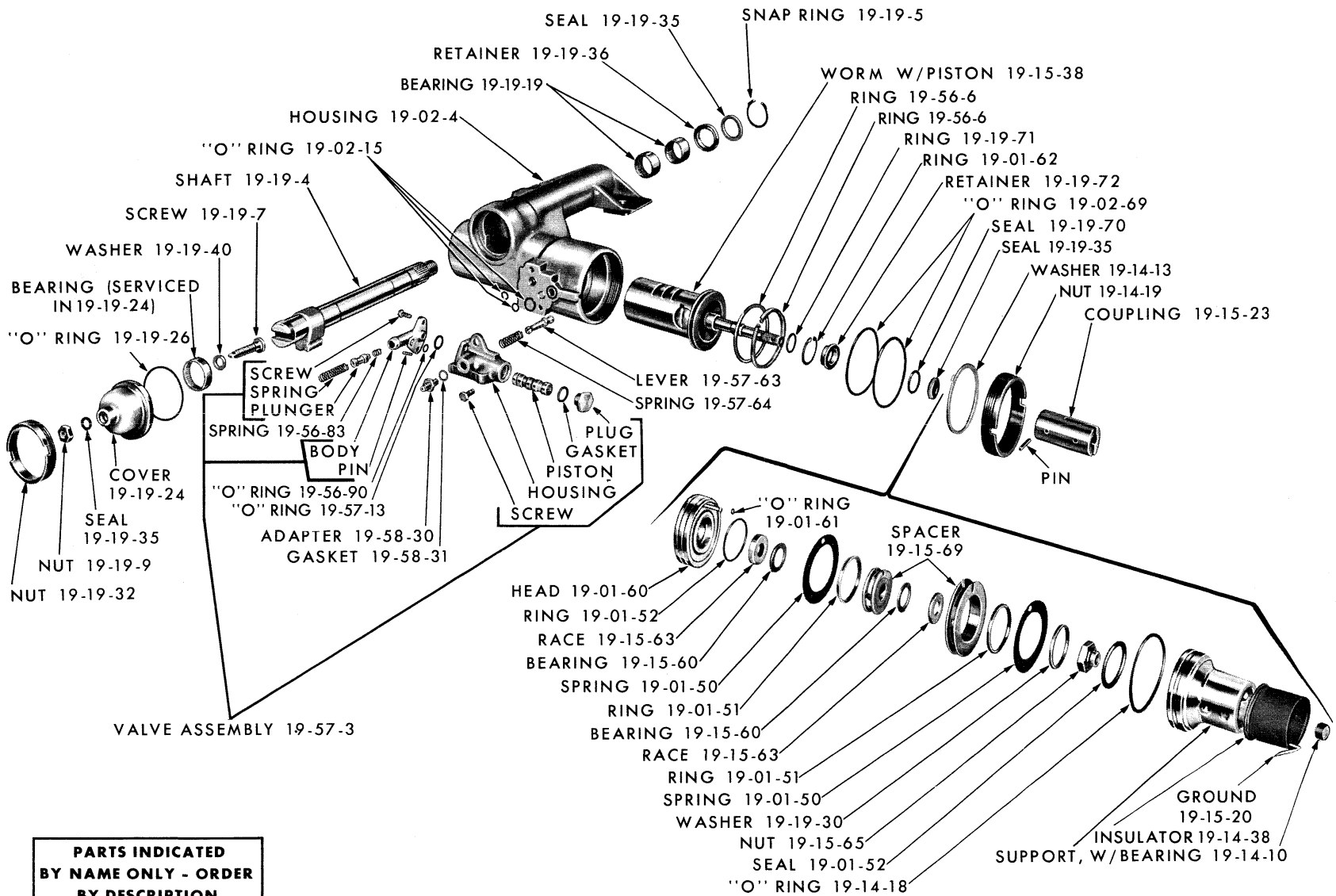


POWER STEERING - CONSTANT CONTROL TYPE

MyMopar.com

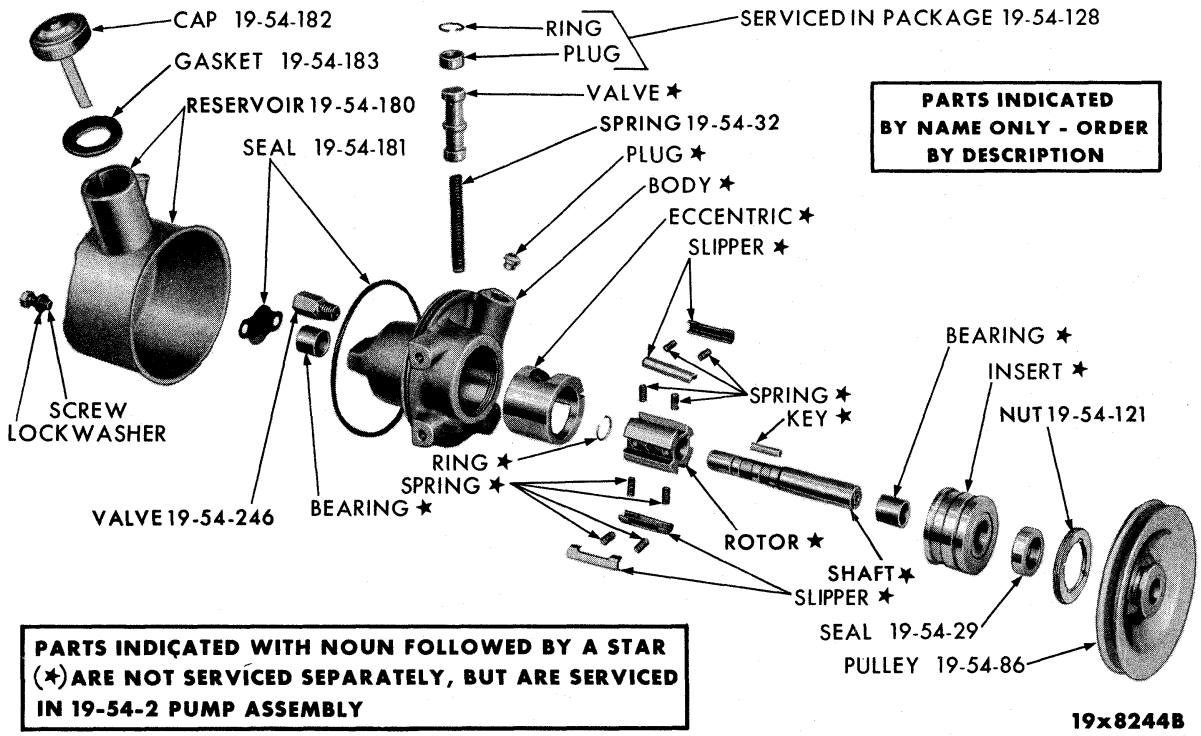


POWER STEERING PUMP

## NOTES



MyMopar.com

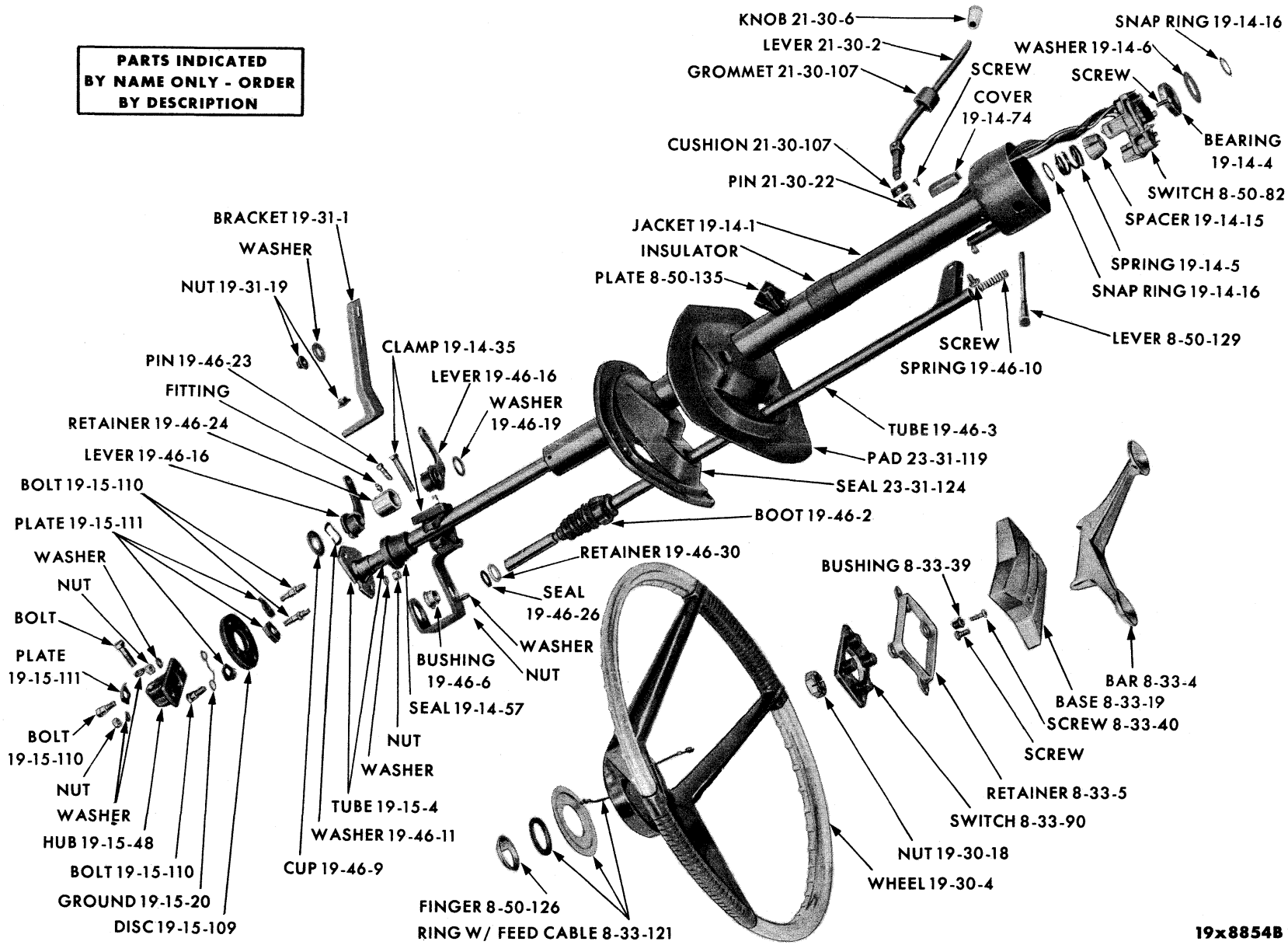


STEERING CONTROLS

MyMopar.com

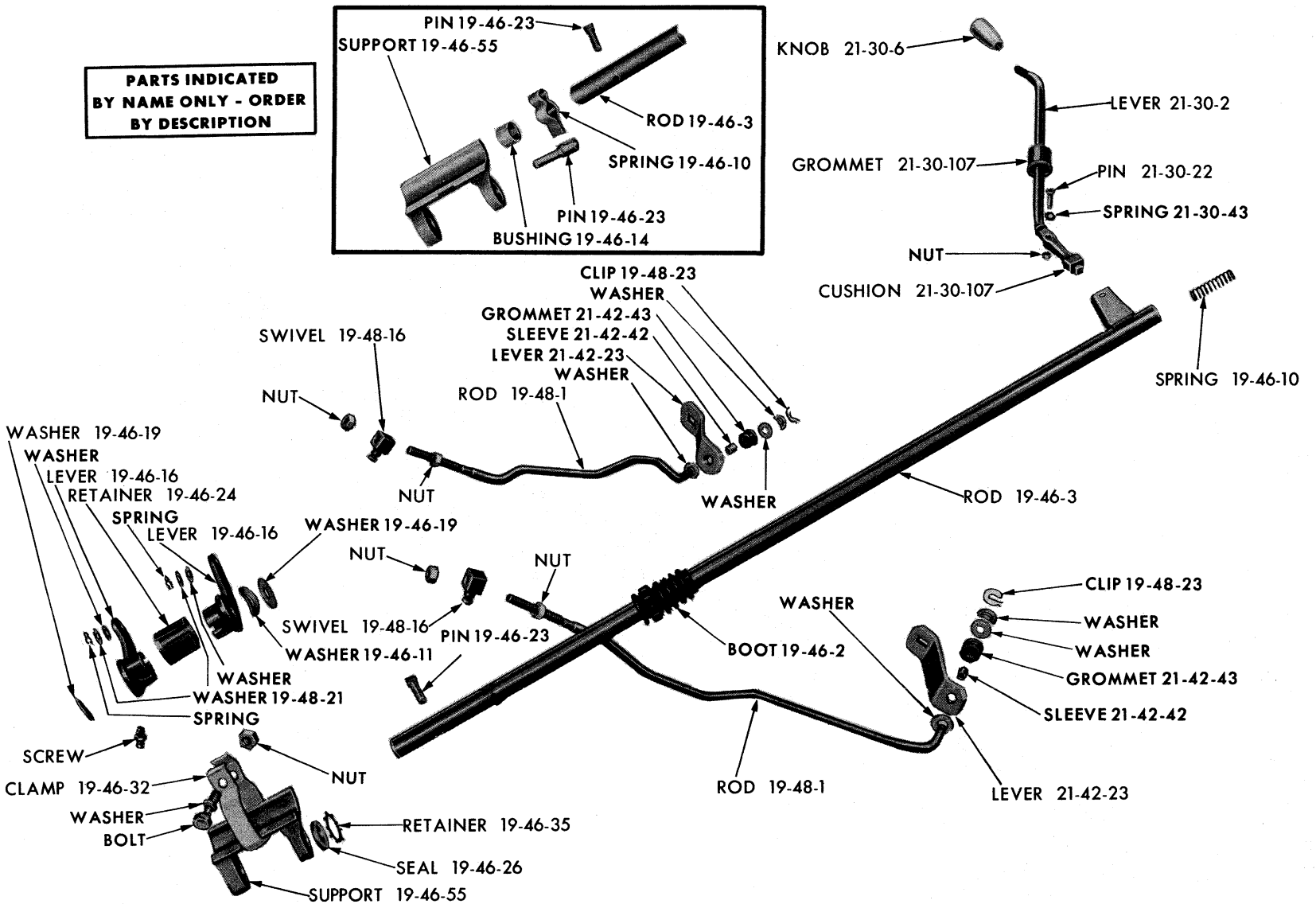


TRANSMISSION CONTROLS - WITH STANDARD TRANSMISSION

MyMopar.com

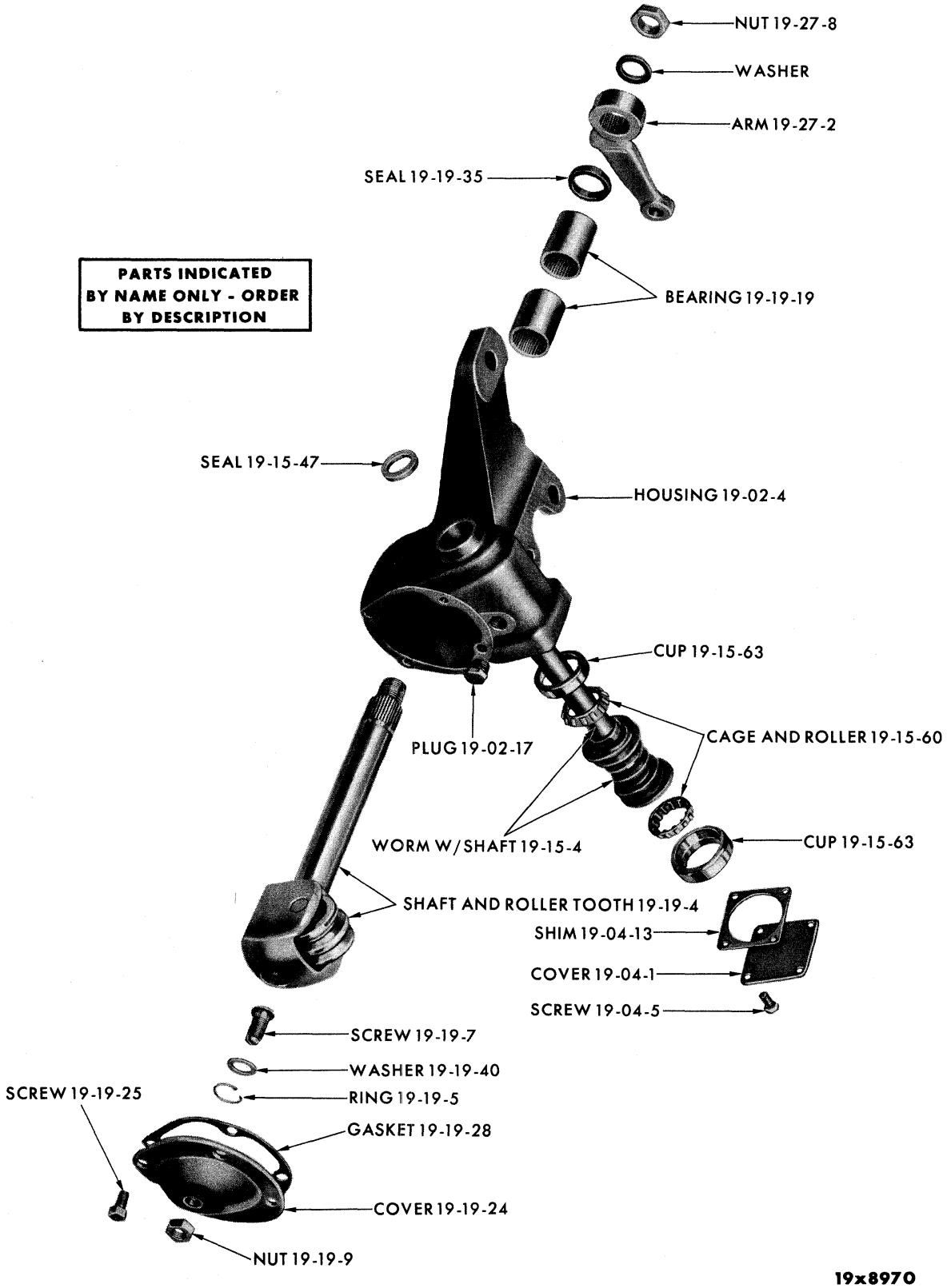


19x8970



MyMopar.com

| CODE | PART NAME AND DESCRIPTION | NO. OF CYL. | PLYMOUTH | DODGE | DESOTO | CHRYSLER AND IMPERIAL | PER CAR | PART NUMBER |
|---|---|---|---|---|---|---|---|---|

## NOTES



MyMopar.com

# GROUP 19 - STEERING

## STANDARD STEERING

| CODE | PART NAME AND DESCRIPTION | NO. OF CYL. | PLYMOUTH | DODGE | DESOTO | CHRYSLER AND IMPERIAL | PER CAR | PART NUMBER |
|---|---|---|---|---|---|---|---|---|
| **19-01-0** | **STEERING GEAR ASSEMBLY** | | | | | | | |
| 19-01-3 | OVERHAUL PACKAGE, PC1 | 6-8 | 60 (1) | 60 (1) | 60 (1) | 60 (1) | 1 | 2084 580 |
| | PC1 | 6-8 | 60 (2) | 60 (2) | 60 (2) | 60 (2) | 1 | 2196 995 |
| 19-01-8 | CHUCK | 6-8 | 60 (1) | - | - | - | 1 | 1948 695 |
| | w/Std. Trans. | 6-8 | - | 60 (1) | - | - | 1 | 1948 695 |
| | w/Auto. Trans. | 6-8 | - | 60 (1) | 60 (1) | - | 1 | 1948 696 |
| | PC1 | 8 | - | - | - | 60 (1) | 1 | 1948 697 |
| | PC1 | 6-8 | 60 (2) | 60 (2) | 60 (2) | 60 (2) | 1 | 2201 622 |
| 19-01-12 | BOLT, Housing to Frame, 4 5/8" x 7/16"-4, PC1 | 6-8 | 60 (2) | 60 (2) | 60 (2) | 60 (2) | 1 | 2201 620 |
| | 4 1/2" x 7/16" - 4, PC1 | 6-8 | 60 (2) | 60 (2) | 60 (2) | 60 (2) | 1 | 2201 621 |
| 19-01-24 | SPACER, Frame, Bolt, PC1 | 6-8 | 60 | 60 | 60 | 60 | 1 | 1733 218 |
| **19-02-0** | **STEERING GEAR HOUSING** | | | | | | | |
| 19-02-4 | HOUSING, PC1 | 6-8 | 60 (1) | 60 (1) | 60 (1) | 60 (1) | 1 | 2123 165 |
| | PC1 | 6-8 | 60 (2) | 60 (2) | 60 (2) | 60 (2) | 1 | 2200 719 |
| 19-02-5 | PIVOT, PC1 | 6-8 | 60 (1) | 60 (1) | 60 (1) | 60 (1) | 1 | 1945 894 |
| 19-02-17 | PLUG, Filler, PC1 | 6-8 | 60 | 60 | 60 | 60 | 1 | 1673 974 |
| 19-02-18 | WASHER, Housing to Frame Bolt, Plain, PC1. | 6-8 | 60 | 60 | 60 | 60 | ★ | 1639 652 |
| 19-02-20 | SPACER, Housing to Frame, PC1 | 6-8 | 60 (1) | 60 (1) | 60 (1) | 60 (1) | ★ | 2122 980 |
| 19-02-21 | WEDGE, Housing to Frame, PC1 | 6-8 | 60 (1) | 60 (1) | 60 (1) | 60 (1) | 1 | 1671 587 |
| **19-04-0** | **STEERING GEAR HOUSING COVER** | | | | | | | |
| 19-04-1 | COVER, PC1 | 6-8 | 60 (1) | 60 (1) | 60 (1) | 60 (1) | 1 | 1829 568 |
| | PC1 | 6-8 | 60 (2) | 60 (2) | 60 (2) | 60 (2) | 1 | 2201 237 |
| 19-04-5 | SCREW, PC1 | 6-8 | 60 | 60 | 60 | 60 | 4 | 1134 479 |
| 19-04-13 | SHIM, .003 thk., PC1 | 6-8 | 60 | 60 | 60 | 60 | ★ | 1123 313 |
| | .006 thk., PC1 | 6-8 | 60 | 60 | 60 | 60 | ★ | 620 180 |
| | .011 thk., PC1 | 6-8 | 60 | 60 | 60 | 60 | ★ | 620 181 |
| | .0275 thk., PC1 | 6-8 | 60 | 60 | 60 | 60 | ★ | 1856 992 |
| **19-13-0** | **STEERING GEAR GREASE RETAINING TUBE** | | | | | | | |
| 19-13-4 | OIL SEAL, PC1 | 6-8 | 60 (1) | 60 (1) | 60 (1) | 60 (1) | 1 | 1829 134 |
| 19-13-5 | SPRING, Oil Seal, PC1 | 6-8 | 60 (1) | 60 (1) | 60 (1) | 60 (1) | 1 | 1829 135 |
| 19-13-6 | WASHER, Oil Seal, PC1 | 6-8 | 60 (1) | 60 (1) | 60 (1) | 60 (1) | 1 | 1829 133 |
| **19-14-0** | **STEERING GEAR COLUMN JACKET** | | | | | | | |
| 19-14-1 | JACKET, w/Std. Trans. | 6-8 | 60 (1) | 60 (1) | - | - | 1 | 2123 007 |
| | w/Std. Trans. | 6-8 | 60 (2) | 60 (2) | - | - | 1 | 2200 731 |
| | w/Auto. Trans. | 6-8 | 60 (1) | - | - | - | 1 | 2123 177 |
| | w/Auto Trans. | 6-8 | 60 (2) | - | - | - | 1 | 2201 227 |
| | w/Auto. Trans. | 6-8 | - | 60 (1) | 60 (1) | - | 1 | 2123 178 |
| | w/Auto Trans. | 6-8 | - | 60 (2) | 60 (2) | - | 1 | 2201 228 |
| | w/Auto. Trans., PC1 | 8 | - | - | - | 60 (1) | 1 | 2123 137 |
| | PC1 | 8 | - | - | - | 60 (2) | 1 | 2201 232 |
| 19-14-4 | BEARING, PC1 | 6-8 | 60 (1) | 60 (1) | 60 (1) | 60 (1) | 1 | 1488 462 |
| | PC1 | 6-8 | 60 (2) | 60 (2) | 60 (2) | 60 (2) | 1 | 1828 911 |
| 19-14-5 | SPRING, Bearing, PC1 | 6-8 | 60 (1) | 60 (1) | 60 (1) | 60 (1) | 1 | 1127 165 |
| | PC1 | 6-8 | 60 (2) | 60 (2) | 60 (2) | 60 (2) | 1 | 1828 566 |
| 19-14-6 | WASHER, Bearing, PC1 | 6-8 | 60 (2) | 60 (2) | 60 (2) | 60 (2) | 1 | ⊟2260 099 |

NOTE 1: Not used with Steering Gear Coupling.

NOTE 2: Use only with Steering Gear Coupling.



MyMopar.com

## STANDARD STEERING

### 19-14-0 STEERING GEAR COLUMN JACKET - Cont'd

| CODE | PART NAME AND DESCRIPTION | NO. OF CYL. | PLYMOUTH | DODGE | DESOTO | CHRYSLER AND IMPERIAL | PER CAR | PART NUMBER |
|---|---|---|---|---|---|---|---|---|
| 19-14-15 | SPACER, Bearing, PC1 | 6-8 | 60 | 60 | 60 | 60 | 1 | 1316 772 |
| 19-14-16 | SNAP RING, Bearing, PC1 | 6-8 | 60 | 60 | 60 | 60 | 2 | 1944 011 |
| 19-14-35 | CLAMP, PC1 | 6-8 | 60 (1) | 60 (1) | 60 (1) | 60 (1) | 1 | 1142 299 |
| | w/Std. Trans. | 6-8 | 60 (2) | 60 (2) | - | - | 1 | 2200 721 |
| | w/Auto. Trans., PC1 | 6-8 | 60 (2) | 60 (2) | 60 (2) | 60 (2) | 1 | 2201 272 |
| 19-14-42 | BUSHING, Jacket Seal, PC1 | 6-8 | 60 (2) | 60 (2) | 60 (2) | 60 (2) | 2 | ⊟2201 624 |
| 19-14-57 | SEAL, Jacket, PC1 | 6-8 | 60 (2) | 60 (2) | 60 (2) | 60 (2) | 1 | 2201 234 |
| 19-14-68 | OIL SEAL, PC1 | 6-8 | 60 (1) | 60 (1) | 60 (1) | 60 (1) | 1 | 661 117 |
| 19-14-69 | WASHER, Oil Seal, PC1 | 6-8 | 60 (1) | 60 (1) | 60 (1) | 60 (1) | 1 | 661 118 |
| 19-14-70 | SPRING, Oil Seal, PC1 | 6-8 | 60 (1) | 60 (1) | 60 (1) | 60 (1) | 1 | 661 119 |
| 19-14-71 | WASHER, Oil Seal Spring, PC1 | 6-8 | 60 (1) | 60 (1) | 60 (1) | 60 (1) | 1 | 1311 849 |
| 19-14-72 | SCREW and WASHER, Column to Floor Attaching, PC1 | 6-8 | 60 | 60 | 60 | 60 | 5 | 6008 218 |
| 19-14-74 | COVER, Jacket Wiring, w/Std. Trans. | 6-8 | 60 (2) | 60 (2) | - | - | 1 | ⊟2123 127 |
| 19-14-77 | ADAPTER, w/Std. Trans. | 6-8 | 60 | - | - | - | 1 | 1902 333 |

### 19-15-0 STEERING GEAR TUBE AND WORM

| | | | | | | | | |
|---|---|---|---|---|---|---|---|---|
| 19-15-3 | TUBE, w/WORM | 6-8 | 60 (1) | - | - | - | 1 | 2122 016 |
| | w/Std. Trans. | 6-8 | - | 60 (1) | - | - | 1 | 2122 016 |
| | w/Auto. Trans. | 6-8 | - | 60 (1) | 60 (1) | - | 1 | 2122 033 |
| | PC1 | 8 | - | - | - | 60 (1) | 1 | 1948 709 |
| | WORM, w/SHAFT (also specify 1 of 2260 484 Hub) PC1 | 6-8 | 60 (2) | 60 (2) | 60 (2) | 60 (2) | 1 | ⊟2127 017 |
| 19-15-4 | TUBE, w/HUB | 6-8 | 60 (2) | - | - | - | 1 | 2200 747 |
| | w/Std. Trans. | 6-8 | - | 60 (2) | - | - | 1 | 2200 747 |
| | w/Auto. Trans. | 6-8 | - | 60 (2) | 60 (2) | - | 1 | 2200 748 |
| | PC1 | 8 | - | - | - | 60 (2) | 1 | 2200 749 |
| 19-15-12 | GROMMET, Tube, PC1 | 6-8 | - | 60 (1) | 60 (1) | 60 (1) | 1 | 1403 226 |
| | PC1 | 6-8 | - | 60 (2) | 60 (2) | 60 (2) | 1 | *2201 333 |
| 19-15-20 | HORN GROUND, PC1 | 6-8 | 60 (2) | 60 (2) | 60 (2) | 60 (2) | 1 | 2201 225 |
| 19-15-47 | OIL SEAL, Worm Shaft, PC1 | 6-8 | 60 (2) | 60 (2) | 60 (2) | 60 (2) | 1 | 2200 730 |
| 19-15-48 | HUB, Worm Shaft, Centerline of Bolt Hole to Centerline of Shaft Hole - .570", PC1 | 6-8 | 60 (2) | 60 (2) | 60 (2) | 60 (2) | 1 | *2200 727 |
| | Centerline of Bolt Hole to Centerline of Shaft Hole - .550", PC1 | 6-8 | 60 (2) | 60 (2) | 60 (2) | 60 (2) | 1 | ⊟2260 484 |
| 19-15-60 | CAGE and ROLLER, Worm Thrust Bearing, PC1 | 6-8 | 60 | 60 | 60 | 60 | 2 | 640 086 |
| 19-15-63 | CUP, Worm Upper Thrust Bearing, PC1 | 6-8 | 60 | 60 | 60 | 60 | 1 | 376 751 |
| | Lower Thrust Bearing, PC1 | 6-8 | 60 | 60 | 60 | 60 | 1 | 637 539 |
| 19-15-109 | DISC, Flexible Joint, PC1 | 6-8 | 60 (2) | 60 (2) | 60 (2) | 60 (2) | 1 | 1856 999 |
| 19-15-110 | BOLT, Coupling, PC1 | 6-8 | 60 (2) | 60 (2) | 60 (2) | 60 (2) | 2 | 1857 003 |
| | Drive, PC1 | 6-8 | 60 (2) | 60 (2) | 60 (2) | 60 (2) | 2 | 1857 001 |
| 19-15-111 | PLATE, Flexible Joint, PC1 | 6-8 | 60 (2) | 60 (2) | 60 (2) | 60 (2) | 4 | 1857 004 |

### 19-19-0 STEERING GEAR SHAFT AND ROLLER TOOTH ASSEMBLY

| | | | | | | | | |
|---|---|---|---|---|---|---|---|---|
| 19-19-4 | SHAFT, w/ROLLER, Tooth, PC1 | 6-8 | 60 | 60 | 60 | 60 | 1 | ⊟2201 612 |
| 19-19-5 | SNAP RING, Shaft, PC1 | 6-8 | 60 | 60 | 60 | 60 | 1 | 1316 862 |
| 19-19-7 | SCREW, Shaft Adjusting, PC1 | 6-8 | 60 | 60 | 60 | 60 | 1 | 682 905 |
| 19-19-19 | BEARING, Upper, Housing, PC1 | 6-8 | 60 | 60 | 60 | 60 | 1 | 2123 169 |
| | Lower, PC1 | 6-8 | 60 | 60 | 60 | 60 | 1 | 2123 170 |
| 19-19-24 | COVER, Shaft, PC1 | 6-8 | 60 | 60 | 60 | 60 | 1 | 1829 128 |
| 19-19-25 | SCREW, Shaft Cover, PC1 | 6-8 | 60 | 60 | 60 | 60 | 4 | 1188 668 |
| 19-19-28 | GASKET, Shaft Cover, PC1 | 6-8 | 60 | 60 | 60 | 60 | 1 | 1738 206 |
| 19-19-35 | OIL SEAL, Shaft, PC1 | 6-8 | 60 | 60 | 60 | 60 | 1 | 1730 985 |

NOTE 1: Not used with Steering Gear Coupling.

NOTE 2: Use only with Steering Gear Coupling.



MyMopar.com

## STANDARD STEERING

### 19-27-0 STEERING GEAR ARM AND IDLER ARM

| CODE | PART NAME AND DESCRIPTION | NO. OF CYL. | PLYMOUTH | DODGE | DESOTO | CHRYSLER AND IMPERIAL | PER CAR | PART NUMBER |
|---|---|---|---|---|---|---|---|---|
| 19-27-2 | ARM, Gear, PC1 | 6-8 | 60 | 60 | 60 | 60 | 1 | 1824 941 |
| 19-27-8 | NUT, Arm, PC1 | 6-8 | 60 | 60 | 60 | 60 | 1 | 1392 770 |
| 19-27-31 | ARM, w/BUSHING, Idler, PC1 | 6-8 | 60 | 60 | 60 | 60 | 1 | 1734 335 |
| | ARM KIT, Idler | 6-8 | 60 | 60 | 60 | 60 | 1 | 1857 962 |
| 19-27-33 | BRACKET, Idler Arm, PC1 | 6-8 | 60 | 60 | 60 | 60 | 1 | 1671 702 |
| 19-27-34 | BUSHING, Linkage Arm, PC1 | 6-8 | 60 | 60 | 60 | 60 | 1 | 1734 327 |
| 19-27-45 | BOLT, Linkage Idler Arm, PC1 | 6-8 | 60 | 60 | 60 | 60 | 1 | 1734 326 |
| 19-27-50 | LINK, Center, PC1 | 6-8 | 60 | 60 | 60 | 60 | 1 | 1673 008 |
| 19-27-55 | SEAL, Center Link, PC1 | 6-8 | 60 | 60 | 60 | 60 | 2 | 1670 299 |

### 19-30-0 STEERING WHEEL

| | | | | | | | | |
|---|---|---|---|---|---|---|---|---|
| 19-30-4 | WHEEL, Plastic, Black | 6-8 | 60 | - | - | - | 1 | *2122 642 |
| | Plastic, Blue | 6-8 | 60 | - | - | - | 1 | *1946 562 |
| | Plastic, Green | 6-8 | 60 | - | - | - | 1 | *2122 638 |
| | Plastic, Red | 6-8 | 60 | - | - | - | 1 | *2122 639 |
| | Plastic, Turquoise | 6-8 | 60 | - | - | - | 1 | *2122 640 |
| | Plastic Oval, Clear w/Silver Flake and Black | 6-8 | 60 | - | - | - | 1 | 1946 568 |
| | Plastic Oval, Clear w/Silver Flake and Blue | 6-8 | 60 | - | - | - | 1 | 2122 645 |
| | Plastic Oval, Clear w/Silver Flake and Green | 6-8 | 60 | - | - | - | 1 | 2122 646 |
| | Plastic Oval, Clear w/Silver Flake and Red | 6-8 | 60 | - | - | - | 1 | 2122 648 |
| | Plastic Oval, Clear w/Silver Flake and Turquoise | 6-8 | 60 | - | - | - | 1 | 2122 647 |
| | Rubber, Blue, w/Std. Trans. | 6-8 | - | 60 | - | - | 1 | 2122 663 |
| | Rubber, Brown, w/Std. Trans. | 6-8 | - | 60 | - | - | 1 | 2122 665 |
| | Rubber, Gray, w/Std. Trans. | 6-8 | - | 60 | - | - | 1 | 2122 666 |
| | Rubber, Green, w/Std. Trans. | 6-8 | - | 60 | - | - | 1 | 2122 664 |
| | Rubber, Black, w/Std. Trans. | 6-8 | - | 60 | - | - | 1 | 2122 667 |
| | Rubber, Blue, w/Auto. Trans., PD1, PD3, PD4 | 6-8 | - | 60 | - | - | 1 | 1948 665 |
| | Rubber, Brown, w/Auto. Trans., PD1, PD3, PD4 | 6-8 | - | 60 | - | - | 1 | 2122 670 |
| | Rubber, Gray, w/Auto. Trans., PD1, PD3, PD4 | 6-8 | - | 60 | - | - | 1 | 2122 671 |
| | Rubber, Green, w/Auto. Trans., PD1, PD3, PD4 | 6-8 | - | 60 | - | - | 1 | 2122 669 |
| | Rubber, Black, w/Auto. Trans., PD3, PD4 | 6-8 | - | 60 | - | - | 1 | 2122 672 |
| | Plastic, Clear w/Silver Flake and Blue, w/Auto. Trans. | 6-8 | - | 60 | - | - | 1 | 1948 673 |
| | Plastic, Clear w/Silver Flake and Brown, w/Auto. Trans. | 6-8 | - | 60 | - | - | 1 | 2122 674 |
| | Plastic, Clear w/Silver Flake and Gray, w/Auto. Trans. | 6-8 | - | 60 | - | - | 1 | 2122 675 |
| | Plastic, Clear w/Silver Flake and Green, w/Auto. Trans. | 6-8 | - | 60 | - | - | 1 | 2122 673 |
| | Plastic, Clear w/Silver Flake and Black, w/Auto. Trans. | 6-8 | - | 60 | - | - | 1 | 2122 676 |
| | Rubber, Blue, PS1 | 8 | - | - | 60 | - | 1 | 2122 629 |
| | Rubber, Gray, PS1 | 8 | - | - | 60 | - | 1 | 2122 630 |
| | Rubber, Green, PS1 | 8 | - | - | 60 | - | 1 | 2122 632 |
| | Rubber, Tan, PS1 | 8 | - | - | 60 | - | 1 | 2122 631 |
| | Rubber, Red, PS1 | 8 | - | - | 60 | - | 1 | 2122 633 |
| | Plastic, White Pearl and Blue | 8 | - | - | 60 | - | 1 | 2122 043 |
| | Plastic, White Pearl and Gray | 8 | - | - | 60 | - | 1 | 2122 044 |
| | Plastic, White Pearl and Green | 8 | - | - | 60 | - | 1 | 2122 047 |
| | Plastic, White Pearl and Tan | 8 | - | - | 60 | - | 1 | 2122 045 |
| | Plastic, White Pearl and Red | 8 | - | - | 60 | - | 1 | 2122 046 |
| | Rubber, Blue, PC1 | 8 | - | - | - | 60 | 1 | 1945 906 |
| | Rubber, Gray, PC1 | 8 | - | - | - | 60 | 1 | 1948 846 |
| | Rubber, Mauve, PC1 | 8 | - | - | - | 60 | 1 | 1948 850 |
| | Rubber, Red, PC1 | 8 | - | - | - | 60 | 1 | 2123 139 |
| | Rubber, Tan, PC1 | 8 | - | - | - | 60 | 1 | 1948 848 |
| | Rubber, Terra Cotta, PC1 | 8 | - | - | - | 60 | 1 | 1948 851 |
| | Rubber, Turquoise, PC1 | 8 | - | - | - | 60 | 1 | 1948 849 |
| | Rubber, White, PC1 | 8 | - | - | - | 60 | 1 | 2123 140 |



MyMopar.com

## STANDARD STEERING

### 19-30-0 STEERING WHEEL - Cont'd

| CODE | PART NAME AND DESCRIPTION | NO. OF CYL. | PLYMOUTH | DODGE | DESOTO | CHRYSLER AND IMPERIAL | PER CAR | PART NUMBER |
|---|---|---|---|---|---|---|---|---|
| 19-30-4 | WHEEL - Cont'd. | | | | | | | |
| | Plastic, Clear and Blue, PC1 | 8 | - | - | - | 60 | 1 | 1945 904 |
| | Plastic, Clear and Gray, PC1 | 8 | - | - | - | 60 | 1 | 1948 840 |
| | Plastic, Clear and Mauve, PC1 | 8 | - | - | - | 60 | 1 | 1948 843 |
| | Plastic, Clear and Red, PC1 | 8 | - | - | - | 60 | 1 | 2123 141 |
| | Plastic, Clear and Tan, PC1 | 8 | - | - | - | 60 | 1 | 1948 841 |
| | Plastic, Clear and Terra Cotta, PC1 | 8 | - | - | - | 60 | 1 | 1948 844 |
| | Plastic, Clear and Turquoise, PC1 | 8 | - | - | - | 60 | 1 | 1948 842 |
| | Plastic, Clear and White, PC1 | 8 | - | - | - | 60 | 1 | 2123 142 |
| 19-30-7 | COVER, Hub | 8 | - | - | 60 | - | 1 | 2122 054 |
| 19-30-18 | NUT, Wheel, PC1 | 6-8 | 60 (1) | 60 (1) | 60 (1) | 60 (1) | 1 | 852 414 |
| | PC1 | 6-8 | 60 (2) | 60 (2) | 60 (2) | 60 (2) | 1 | 2200 577 |

### 19-31-0 STEERING COLUMN BRACKET

| | | | | | | | | |
|---|---|---|---|---|---|---|---|---|
| 19-31-1 | BRACKET, w/Auto Trans. | 6-8 | - | 60 (1) | 60 (1) | - | 1 | 1839 984 |
| | w/Std. Trans. | 6-8 | - | 60 (1) | - | - | 1 | 1839 979 |
| | PC1 | 8 | - | - | - | 60 (1) | 1 | 1902 223 |
| | w/Power Brake, Lower Column to Dash Panel, PC1 | 6-8 | 60 (2) | 60 (2) | 60 (2) | 60 (2) | 1 | *2200 739 |
| | w/Std. Brake, Lower Column to Dash Panel, PC1 | 6-8 | 60 (2) | 60 (2) | 60 (2) | 60 (2) | 1 | *2200 740 |
| 19-31-2 | SUPPORT, w/CLAMP, Bracket, PC1. | 6-8 | 60 | 60 | 60 | 60 | 1 | ⊟2200 738 |
| 19-31-19 | STUD, Cap Attaching | 6-8 | - | 60 | 60 | - | 2 | 1901 587 |
| | SPEED NUT, Bracket Attaching | 6-8 | - | 60 | 60 | - | 2 | 1327 986 |
| | STUD, Bracket, Cap Attaching, PC1 | 8 | - | - | - | 60 | 2 | 6010 043 |
| | NUT, w/WASHER, Column Bracket, PC1 | 6-8 | 60 (2) | 60 (2) | 60 (2) | 60 (2) | 4 | 2076 232 |
| 19-31-24 | CAP, Bracket, w/Auto Trans. | 6-8 | 60 | 60 | 60 | - | 1 | 1839 985 |
| | w/Std. Trans. | 6-8 | 60 | 60 | - | - | 1 | 1839 980 |
| | CAP, Bracket, PC1 | 8 | - | - | - | 60 | 1 | 1839 685 |

### 19-46-0 GEARSHIFT ROD OR TUBE

| | | | | | | | | |
|---|---|---|---|---|---|---|---|---|
| 19-46-2 | BOOT, Rod, w/Std. Trans. | 6-8 | 60 (2) | 60 (2) | - | - | 1 | 2161 726 |
| 19-46-3 | TUBE, w/Std. Trans. | 6-8 | 60 | 60 | - | - | 1 | 2123 677 |
| 19-46-5 | SPRING, Tube Anti-Shake, w/Std. Trans. | 6-8 | 60 | 60 | - | - | 1 | 2123 678 |
| 19-46-6 | BUSHING, Tube, w/Std. Trans. | 6-8 | 60 (2) | 60 (2) | - | - | 1 | 2201 259 |
| 19-46-9 | CUP, Tube Lever Spring Washer, w/Std. Trans. | 6-8 | 60 (1) | 60 (1) | - | - | 1 | 1673 948 |
| | w/Std. Trans. | 6-8 | 60 (2) | 60 (2) | - | - | 1 | 2201 258 |
| 19-46-10 | SPRING, Tube Return, w/Std. Trans. | 6-8 | 60 | 60 | - | - | 1 | 1632 808 |
| | Tube Lever Lock, High Performance | 8 | 60 | - | - | - | 1 | ⊟2122 977 |
| 19-46-11 | WASHER, Tube Lever Spring, w/Std. Trans. | 6-8 | 60 (1) | 60 (1) | - | - | 1 | 1820 387 |
| | w/Std. Trans. | 6-8 | 60 (2) | 60 (2) | - | - | 1 | 2201 260 |
| 19-46-14 | BUSHING, Tube Lever Lock, High Performance | 8 | 60 | - | - | - | 1 | ⊟2122 978 |
| 19-46-16 | LEVER, Tube, w/Std. Trans., 2nd. and 3rd. | 6-8 | 60 (1) | 60 (1) | - | - | 1 | 2122 999 |
| | w/Std. Trans., 2nd and High | 6-8 | 60 (2) | 60 (2) | - | - | 1 | 2122 039 |
| | w/Std. Trans., First and Reverse | 6-8 | 60 (1) | 60 (1) | - | - | 1 | 2123 000 |
| | w/Std. Trans., 1st and Reverse | 6-8 | 60 (2) | 60 (2) | - | - | 1 | 2122 038 |
| 19-46-19 | WASHER, Tube Lever, w/Std. Trans. | 6-8 | 60 | 60 | - | - | 1 | 1670 932 |
| 19-46-23 | PIN, Tube, w/Std. Trans. | 6-8 | 60 | 60 | - | - | 1 | 1946 578 |
| | High Performance | 8 | 60 | - | - | - | 1 | *1675 771 |
| | Tube Lever Lock, High Performance | 8 | 60 | - | - | - | 1 | ⊟2122 979 |
| 19-46-24 | RETAINER, Tube Lever Pin, w/Std. Trans. | 6-8 | 60 | 60 | - | - | 1 | 2123 129 |
| 19-46-26 | SEAL, Tube Bushing Support, w/Std. Trans. | 6-8 | 60 (1) | 60 (1) | - | - | 1 | 1730 984 |
| | w/Std. Trans. | 6-8 | 60 (2) | 60 (2) | - | - | 1 | 2123 012 |
| 19-46-32 | CLAMP, Tube Support, w/Std. Trans. | 6-8 | 60 (1) | 60 (1) | - | - | 1 | 1829 589 |
| 19-46-35 | RETAINER, Tube Support Seal, w/Std. Trans. | 6-8 | 60 (1) | 60 (1) | - | - | 1 | 1738 207 |
| | w/Std. Trans. | 6-8 | 60 (2) | 60 (2) | - | - | 1 | 2123 013 |
| 19-46-41 | WASHER, Rod, Plain, w/Std. Trans. | 6-8 | 60 | 60 | - | - | 2 | * 631 217 |
| 19-46-55 | SUPPORT, Tube, w/Std. Trans. | 6-8 | 60 (1) | 60 (1) | - | - | 1 | 2123 017 |

NOTE 1: Not used with Steering Gear Coupling.

NOTE 2: Use only with Steering Gear Coupling.



MyMopar.com

## STANDARD STEERING

### 19-48-0 GEARSHIFT CONTROL RODS

| CODE | PART NAME AND DESCRIPTION | NO. OF CYL. | PLYMOUTH | DODGE | DESOTO | CHRYSLER AND IMPERIAL | PER CAR | PART NUMBER |
|---|---|---|---|---|---|---|---|---|
| 19-48-1 | ROD, w/Std. Trans., 2nd and High, PD1, PD4 | 8 | 60 (1) | 60 (1) | - | - | 1 | 1856 498 |
| | w/Std. Trans., 2nd and High, PD1, PD4, UP TO | 8 | 60 (3) | 60 (3) | - | - | 1 | *1948 785 |
| | w/Std. Trans., 2nd and High, PD1, PD4, AFTER | 8 | 60 (3) | 60 (3) | - | - | 1 | *2200 480 |
| | w/Std. Trans., 1st and Reverse, PD1, PD4 | 8 | 60 (1) | 60 (1) | - | - | 1 | 1856 499 |
| | w/Std. Trans., 1st and Reverse, PD1, PD4, UP TO | 8 | 60 (3) | 60 (3) | - | - | 1 | *1948 786 |
| | w/Std. Trans., 1st and Reverse, PD1, PD4, AFTER | 8 | 60 (3) | 60 (3) | - | - | 1 | *2200 481 |
| | w/Std. Trans., 2nd and High | 6 | 60 (1) | 60 (1) | - | - | 1 | 2200 478 |
| | w/Std. Trans., 2nd and High | 6 | 60 (2) | 60 (2) | - | - | 1 | 2200 480 |
| | w/Std. Trans., 1st and Reverse | 6 | 60 (1) | 60 (1) | - | - | 1 | 2200 479 |
| | w/Std. Trans., 1st and Reverse | 6 | 60 (2) | 60 (2) | - | - | 1 | 2200 481 |
| | High Performance, w/Std. Trans., 2nd and High, PD1, PD4 | 8 | 60 | 60 | - | - | 1 | 2200 482 |
| | High Performance, w/Std. Trans., 1st and Reverse, PD1, PD4 | 8 | 60 | 60 | - | - | 1 | 2200 483 |
| | w/Std. Trans., 2nd and High, PD2 | 8 | - | 60 | - | - | 1 | 2200 482 |
| | w/Std. Trans., 1st and Reverse, PD2 | 8 | - | 60 | - | - | 1 | 2200 483 |
| 19-48-7 | SMALL PARTS PACKAGE, w/Std. Trans. | 6-8 | 60 | 60 | - | - | 1 | ⊟2240 631 |
| 19-48-16 | SWIVEL, w/Std. Trans. | 6-8 | 60 | 60 | - | - | 1 | 1731 118 |
| 19-48-20 | WASHER, Swivel, Spring, w/Std. Trans. | 6-8 | 60 | 60 | - | - | 1 | 6012 072 |
| 19-48-21 | WASHER, Swivel, w/Std. Trans. | 6-8 | 60 | 60 | - | - | 2 | 632 258 |
| 19-48-23 | CLIP, w/Std. Trans. | 6-8 | 60 | 60 | - | - | 2 | 1137 669 |

NOTE 1: Not used with Steering Gear Coupling.

NOTE 2: Use only with Steering Gear Coupling.

NOTE 3: Engine No. 216116 w/Steering Gear Coupling.

**NOTES**



MyMopar.com

# POWER STEERING

## 19-01-0 STEERING GEAR ASSEMBLY

| CODE | PART NAME AND DESCRIPTION | NO. OF CYL. | PLYMOUTH | DODGE | DESOTO | CHRYSLER AND IMPERIAL | PER CAR | PART NUMBER |
|---|---|---|---|---|---|---|---|---|
| 19-01-4 | "O" RING and SEAL PACKAGE, Gear, PC1, PC2, PC3 | 6-8 | 60 | 60 | 60 | 60 | 1 | 2084 839 |
| | PY1 | 8 | - | - | - | 60 | 1 | 2084 840 |
| 19-01-8 | CHUCK, PC1, PC2 | 6-8 | 60 | 60 | 60 | 60 | 1 | 1733 763 |
| | PC3 w/o Ram Manifold | 8 | - | - | - | 60 | 1 | 1733 763 |
| | w/Ram Manifold, PC3 | 8 | - | - | - | 60 | 1 | 1948 679 |
| | PY1 | 8 | - | - | - | 60 | 1 | 2122 032 |
| 19-01-12 | BOLT, Housing to Frame, 4 5/8" x 7/16" | 6-8 | 60 | 60 | 60 | 60 | ★ | 2201 620 |
| 19-01-50 | SPRING, Reaction, PC1, PC2, PC3 | 6-8 | 60 | 60 | 60 | 60 | 2 | 1822 134 |
| | PY1 | 8 | - | - | - | 60 | 2 | 1822 953 |
| 19-01-51 | RING, Reaction, PC1, PC2, PC3 | 6-8 | 60 | 60 | 60 | 60 | 2 | 1822 150 |
| | PY1 | 8 | - | - | - | 60 | 2 | 1733 791 |
| 19-01-52 | "O" RING, Reaction, Upper, PC1, PC2, PC3 | 6-8 | 60 | 60 | 60 | 60 | 1 | 1822 151 |
| | Lower, PC1, PC2, PC3 | 6-8 | 60 | 60 | 60 | 60 | 1 | 1822 149 |
| | Upper, PY1 | 8 | - | - | - | 60 | 1 | 1733 593 |
| | Lower, PY1 | 8 | - | - | - | 60 | 1 | 1823 091 |
| 19-01-60 | HEAD, Cylinder, PC1, PC2, PC3 | 6-8 | 60 | 60 | 60 | 60 | 1 | 1945 808 |
| | PY1 | 8 | - | - | - | 60 | 1 | 1823 161 |
| 19-01-61 | "O" RING, Cylinder Head Ferrule | 6-8 | 60 | 60 | 60 | 60 | 1 | 1486 205 |
| 19-01-62 | SNAP RING, Cylinder Head | 6-8 | 60 | 60 | 60 | 60 | 1 | 1822 321 |

## 19-02-0 STEERING GEAR HOUSING

| | | | | | | | | |
|---|---|---|---|---|---|---|---|---|
| 19-02-4 | HOUSING PACKAGE | 6-8 | 60 | 60 | 60 | 60 | 1 | ⊟2240 602 |
| 19-02-15 | "O" RING, Housing | 6-8 | 60 | 60 | 60 | 60 | 1 | 1316 849 |
| | "O" RING, Housing Port | 6-8 | 60 | 60 | 60 | 60 | 2 | 1556 385 |
| 19-02-18 | WASHER, Housing to Frame Bolt, Plain | 6-8 | 60 | 60 | 60 | 60 | ★ | 1639 652 |
| 19-02-20 | SPACER, Housing to Frame | 6-8 | 60 | 60 | 60 | 60 | ★ | 2122 980 |
| 19-02-21 | WEDGE, Housing to Frame | 6-8 | 60 | 60 | 60 | 60 | 1 | 1671 587 |
| 19-02-69 | "O" RING, Cylinder Head | 6-8 | 60 | 60 | 60 | 60 | 2 | 1733 562 |

## 19-14-0 STEERING GEAR COLUMN JACKET

| | | | | | | | | |
|---|---|---|---|---|---|---|---|---|
| 19-14-1 | JACKET, w/Std. Trans. | 6-8 | 60 | 60 | - | - | 1 | 2123 009 |
| | w/Auto. Trans. | 6-8 | 60 | - | - | - | 1 | 2122 991 |
| | w/Auto. Trans. | 6-8 | - | 60 | 60 | - | 1 | 1948 862 |
| | w/Auto. Trans., PC1 | 8 | - | - | - | 60 | 1 | 1945 782 |
| | w/Auto. Trans., PC2, PC3 | 8 | - | - | - | 60 | 1 | 1945 777 |
| | w/Auto. Trans., PY1 | 8 | - | - | - | 60 | 1 | 2122 020 |
| 19-14-4 | BEARING | 6-8 | 60 | 60 | 60 | 60 | 1 | 1828 911 |
| 19-14-5 | SPRING, Bearing | 6-8 | 60 | 60 | 60 | 60 | 1 | 1828 566 |
| 19-14-6 | WASHER, Bearing | 6-8 | 60 | 60 | 60 | 60 | 1 | ⊟2260 099 |
| 19-14-7 | PACKAGE, Bearing and Tube | 6-8 | 60 | 60 | 60 | 60 | 1 | 1879 708 |
| 19-14-10 | SUPPORT and INSULATOR PACKAGE, PC1, PC2, PC3 | 6-8 | 60 | 60 | 60 | 60 | 1 | 1879 713 |
| | PY1 | 8 | - | - | - | 60 | 1 | 1823 160 |
| 19-14-13 | WASHER, Support Nut | 6-8 | 60 | 60 | 60 | 60 | 1 | 1733 588 |
| 19-14-15 | SPACER, Bearing | 6-8 | 60 | 60 | 60 | 60 | 1 | 1316 772 |
| 19-14-16 | SNAP RING, Bearing, PC1 | 6-8 | 60 | 60 | 60 | 60 | 2 | 1944 011 |
| 19-14-18 | "O" RING, Support | 6-8 | 60 | 60 | 60 | 60 | 1 | 1733 602 |
| 19-14-19 | NUT, Support | 6-8 | 60 | 60 | 60 | 60 | 1 | 1733 625 |
| 19-14-35 | CLAMP | 6-8 | 60 | 60 | 60 | 60 | 1 | 1820 385 |
| | PY1 | 8 | - | - | - | 60 | 1 | *1902 340 |
| | w/SUPPORT, w/Std. Trans. | 6-8 | 60 | 60 | - | - | 1 | 2123 011 |
| 19-14-38 | INSULATOR | 6-8 | 60 | 60 | 60 | 60 | 1 | 1850 547 |
| 19-14-72 | SCREW and WASHER, Column to Floor Attaching, PC1, PC2, PC3 | 6-8 | 60 | 60 | 60 | 60 | 5 | 6008 218 |
| 19-14-74 | COVER, Jacket Wiring, w/Std. Trans. | 6-8 | 60 | 60 | - | - | 1 | ⊟2123 127 |



MyMopar.com

# POWER STEERING

## 19-15-0 STEERING GEAR TUBE AND WORM

| CODE | PART NAME AND DESCRIPTION | NO. OF CYL. | PLYMOUTH | DODGE | DESOTO | CHRYSLER AND IMPERIAL | PER CAR | PART NUMBER |
|---|---|---|---|---|---|---|---|---|
| 19-15-4 | TUBE | 6-8 | 60 | - | - | - | 1 | 1948 687 |
| | w/Std. Trans., PD1, PD3, PD4 | 6-8 | - | 60 | - | - | 1 | 1948 687 |
| | w/Auto. Trans., PD1, PD3, PD4 | 6-8 | - | 60 | - | - | 1 | 1948 688 |
| | PD2 | 8 | - | 60 | 60 | - | 1 | 1948 688 |
| | PC1 | 8 | - | - | - | 60 | 1 | 1948 691 |
| | PC2, PC3 | 8 | - | - | - | 60 | 1 | 1948 692 |
| | PY1 | 8 | - | - | - | 60 | 1 | 1948 693 |
| 19-15-10 | INSULATOR, Tube | 6-8 | 60 | 60 | 60 | 60 | 1 | 1822 668 |
| 19-15-11 | INSERT, Tube Insulator | 6-8 | 60 | 60 | 60 | 60 | 2 | 1822 667 |
| 19-15-15 | SNAP RING, Tube | 6-8 | 60 | 60 | 60 | 60 | ★ | 1944 011 |
| 19-15-20 | HORN GROUND, Tube | 6-8 | 60 | 60 | 60 | 60 | 1 | 1856 336 |
| 19-15-23 | COUPLING, Worm | 6-8 | 60 | 60 | 60 | 60 | 1 | 1850 524 |
| 19-15-38 | WORM, w/PISTON | 6-8 | 60 | 60 | 60 | 60 | 1 | 1822 736 |
| 19-15-39 | SPRING PACKAGE, Ball Guide | 6-8 | 60 | 60 | 60 | 60 | 1 | 2084 215 |
| 19-15-60 | BEARING, Thrust | 6-8 | 60 | 60 | 60 | 60 | 2 | 1822 158 |
| | BEARING, Worm | 6-8 | 60 | 60 | 60 | 60 | 1 | 1733 594 |
| 19-15-63 | RACE, Thrust Bearing, Inner | 6-8 | 60 | 60 | 60 | 60 | 1 | 1856 292 |
| | Outer | 6-8 | 60 | 60 | 60 | 60 | 1 | 1822 156 |
| 19-15-65 | NUT, Thrust Bearing | 6-8 | 60 | 60 | 60 | 60 | 1 | 1822 157 |
| 19-15-69 | SPACER, w/Center Race | 6-8 | 60 | 60 | 60 | 60 | 1 | 1822 390 |

## 19-19-0 STEERING GEAR SHAFT AND ROLLER TOOTH ASSEMBLY

| | | | | | | | | |
|---|---|---|---|---|---|---|---|---|
| 19-19-4 | SHAFT | 6-8 | 60 | 60 | 60 | 60 | 1 | 1733 577 |
| 19-19-5 | SNAP RING, Shaft Oil Seal | 6-8 | 60 | 60 | 60 | 60 | 1 | 1670 357 |
| 19-19-7 | SCREW, Adjusting | 6-8 | 60 | 60 | 60 | 60 | 1 | 1675 269 |
| 19-19-9 | NUT, Adjusting Screw | 6-8 | 60 | 60 | 60 | 60 | 1 | 1822 204 |
| 19-19-19 | BEARING, Housing Shaft | 6-8 | 60 | 60 | 60 | 60 | 2 | 1734 078 |
| 19-19-24 | COVER, Shaft, w/BEARING | 6-8 | 60 | 60 | 60 | 60 | 1 | 1733 604 |
| 19-19-26 | "O" RING, Shaft Cover | 6-8 | 60 | 60 | 60 | 60 | 1 | 1733 615 |
| 19-19-30 | WASHER, Reaction Seal, Upper | 6-8 | 60 | 60 | 60 | 60 | 1 | 1733 790 |
| 19-19-32 | NUT, Shaft Cover | 6-8 | 60 | 60 | 60 | 60 | 1 | 1733 627 |
| 19-19-35 | OIL SEAL, Shaft | 6-8 | 60 | 60 | 60 | 60 | 1 | 1730 985 |
| | SEAL, Adjusting Screw | 6-8 | 60 | 60 | 60 | 60 | 1 | 1822 203 |
| | OIL SEAL, Worm Shaft, Upper | 6-8 | 60 | 60 | 60 | 60 | 1 | 1733 603 |
| 19-19-36 | RETAINER, Oil Seal | 6-8 | 60 | 60 | 60 | 60 | 1 | 1670 356 |
| 19-19-40 | WASHER, Adjusting Screw Thrust | 6-8 | 60 | 60 | 60 | 60 | 1 | 1675 271 |
| 19-19-70 | SEAL, Worm Sleeve | 6-8 | 60 | 60 | 60 | 60 | 1 | 1822 324 |
| 19-19-71 | RING, Worm Sealing, Plastic | 6-8 | 60 | 60 | 60 | 60 | 1 | 1822 406 |
| 19-19-72 | SLEEVE, Worm | 6-8 | 60 | 60 | 60 | 60 | 1 | 1822 320 |

## 19-27-0 STEERING GEAR ARM AND IDLER ARM

| | | | | | | | | |
|---|---|---|---|---|---|---|---|---|
| 19-27-2 | ARM, Gear, PC1 | 6-8 | 60 | 60 | 60 | 60 | 1 | 1731 414 |
| | PC2, PC3, PY1 | 8 | - | - | - | 60 | 1 | 1731 415 |
| 19-27-8 | NUT, Arm | 6-8 | 60 | 60 | 60 | 60 | 1 | 1392 770 |
| 19-27-31 | ARM, w/BUSHING, Idler, PC1 | 6-8 | 60 | 60 | 60 | 60 | 1 | 1734 335 |
| | PC2, PC3, PY1 | 8 | - | - | - | 60 | 1 | 1734 330 |
| | ARM KIT, Idler | 6-8 | 60 | 60 | 60 | 60 | 1 | 1857 962 |
| 19-27-33 | BRACKET, Idler Arm, | 6-8 | 60 | 60 | 60 | 60 | 1 | 1671 702 |
| 19-27-34 | BUSHING, Linkage Arm | 6-8 | 60 | 60 | 60 | 60 | 1 | 1734 327 |
| 19-27-45 | BOLT, Linkage Idler Arm | 6-8 | 60 | 60 | 60 | 60 | 1 | 1734 326 |
| 19-27-50 | LINK, Center, PC1 | 6-8 | 60 | 60 | 60 | 60 | 1 | 1673 008 |
| | PC2, PC3, PY1 | 8 | - | - | - | 60 | 1 | 1672 980 |
| 19-27-55 | SEAL, Center Link | 6-8 | 60 | 60 | 60 | 60 | 2 | 1670 299 |



MyMopar.com

## POWER STEERING

### 19-30-0 STEERING WHEEL

| CODE | PART NAME AND DESCRIPTION | NO. OF CYL. | PLYMOUTH | DODGE | DESOTO | CHRYSLER AND IMPERIAL | PER CAR | PART NUMBER |
|---|---|---|---|---|---|---|---|---|
| 19-30-4 | WHEEL, Plastic, Black | 6-8 | 60 | - | - | - | 1 | *2122 642 |
| | Plastic, Blue | 6-8 | 60 | - | - | - | 1 | *1946 562 |
| | Plastic, Green | 6-8 | 60 | - | - | - | 1 | *2122 638 |
| | Plastic, Red | 6-8 | 60 | - | - | - | 1 | *2122 639 |
| | Plastic, Turquoise | 6-8 | 60 | - | - | - | 1 | *2122 640 |
| | Plastic Flat, Clear w/Silver Flake and Black | 6-8 | 60 | - | - | - | 1 | 1946 569 |
| | Plastic Flat, Clear w/Silver Flake and Blue | 6-8 | 60 | - | - | - | 1 | 2122 652 |
| | Plastic Flat, Clear w/Silver Flake and Green | 6-8 | 60 | - | - | - | 1 | 2122 653 |
| | Plastic Flat, Clear w/Silver Flake and Red | 6-8 | 60 | - | - | - | 1 | 2122 655 |
| | Plastic Flat, Clear w/Silver Flake and Turquoise | 6-8 | 60 | - | - | - | 1 | 2122 654 |
| | Rubber, Blue, w/Std. Trans. | 6-8 | - | 60 | - | - | 1 | 2122 663 |
| | Rubber, Brown, w/Std. Trans. | 6-8 | - | 60 | - | - | 1 | 2122 665 |
| | Rubber, Gray, w/Std. Trans. | 6-8 | - | 60 | - | - | 1 | 2122 666 |
| | Rubber, Green, w/Std. Trans. | 6-8 | - | 60 | - | - | 1 | 2122 664 |
| | Rubber, Black, w/Std. Trans. | 6-8 | - | 60 | - | - | 1 | 2122 667 |
| | Rubber, Blue, w/Auto. Trans., PD1, PD3, PD4 | 6-8 | - | 60 | - | - | 1 | 1948 665 |
| | Rubber, Brown, w/Auto. Trans., PD1, PD3, PD4 | 6-8 | - | 60 | - | - | 1 | 2122 670 |
| | Rubber, Gray, w/Auto. Trans., PD1, PD3, PD4 | 6-8 | - | 60 | - | - | 1 | 2122 671 |
| | Rubber, Green, w/Auto. Trans., PD1, PD3, PD4 | 6-8 | - | 60 | - | - | 1 | 2122 669 |
| | Rubber, Black, w/Auto. Trans., PD3, PD4 | 6-8 | - | 60 | - | - | 1 | 2122 672 |
| | Plastic, Clear w/Silver Flake and Blue, w/Auto. Trans. | 6-8 | - | 60 | - | - | 1 | 1948 673 |
| | Plastic, Clear w/Silver Flake and Brown, w/Auto. Trans. | 6-8 | - | 60 | - | - | 1 | 2122 674 |
| | Plastic, Clear w/Silver Flake and Gray, w/Auto. Trans. | 6-8 | - | 60 | - | - | 1 | 2122 675 |
| | Plastic, Clear w/Silver Flake and Green, w/Auto. Trans. | 6-8 | - | 60 | - | - | 1 | 2122 673 |
| | Plastic, Clear w/Silver Flake and Black, w/Auto. Trans. | 6-8 | - | 60 | - | - | 1 | 2122 676 |
| | Plastic, Clear w/Silver Flake and Gray, PD2 | 8 | - | 60 | - | - | 1 | 2122 675 |
| | Rubber, Blue, PS1 | 8 | - | - | 60 | - | 1 | 2122 629 |
| | Rubber, Gray, PS1 | 8 | - | - | 60 | - | 1 | 2122 630 |
| | Rubber, Green, PS1 | 8 | - | - | 60 | - | 1 | 2122 632 |
| | Rubber, Tan, PS1 | 8 | - | - | 60 | - | 1 | 2122 631 |
| | Rubber, Red, PS1 | 8 | - | - | 60 | - | 1 | 2122 633 |
| | Plastic, White Pearl and Blue | 8 | - | - | 60 | - | 1 | 2122 043 |
| | Plastic, White Pearl and Gray | 8 | - | - | 60 | - | 1 | 2122 044 |
| | Plastic, White Pearl and Green | 8 | - | - | 60 | - | 1 | 2122 047 |
| | Plastic, White Pearl and Tan | 8 | - | - | 60 | - | 1 | 2122 045 |
| | Plastic, White Pearl and Red | 8 | - | - | 60 | - | 1 | 2122 046 |
| | Rubber, Blue, PC1, PC2 | 8 | - | - | - | 60 | 1 | 1945 906 |
| | Rubber, Gray, PC1, PC2 | 8 | - | - | - | 60 | 1 | 1948 846 |
| | Rubber, Mauve, PC1, PC2 | 8 | - | - | - | 60 | 1 | 1948 850 |
| | Rubber, Red, PC1, PC2 | 8 | - | - | - | 60 | 1 | 2123 139 |
| | Rubber, Tan, PC1, PC2 | 8 | - | - | - | 60 | 1 | 1948 848 |
| | Rubber, Terra Cotta, PC1, PC2 | 8 | - | - | - | 60 | 1 | 1948 851 |
| | Rubber, Turquoise, PC1, PC2 | 8 | - | - | - | 60 | 1 | 1948 849 |
| | Rubber, White, PC1, PC2 | 8 | - | - | - | 60 | 1 | 2123 140 |
| | Plastic, Clear and Blue, PC1, PC2, PC3 | 8 | - | - | - | 60 | 1 | 1945 904 |
| | Plastic, Clear and Gray, PC1, PC2, PC3 | 8 | - | - | - | 60 | 1 | 1948 840 |
| | Plastic, Clear and Mauve, PC1, PC2, PC3 | 8 | - | - | - | 60 | 1 | 1948 843 |
| | Plastic, Clear and Red, PC1, PC2, PC3 | 8 | - | - | - | 60 | 1 | 2123 141 |
| | Plastic, Clear and Tan, PC1, PC2, PC3 | 8 | - | - | - | 60 | 1 | 1948 841 |
| | Plastic, Clear and Terra Cotta, PC1, PC2, PC3 | 8 | - | - | - | 60 | 1 | 1948 844 |
| | Plastic, Clear and Turquoise, PC1, PC2, PC3 | 8 | - | - | - | 60 | 1 | 1948 842 |
| | Plastic, Clear and White, PC1, PC2, PC3 | 8 | - | - | - | 60 | 1 | 2123 142 |
| | Plastic, Clear and Beige, PC3-300 | 8 | - | - | - | 60 | 1 | 1948 845 |
| | Plastic, Black Frost, Round, PY1 | 8 | - | - | - | 60 | 1 | *2200 567 |



MyMopar.com

## POWER STEERING

### 19-30-0 STEERING WHEEL - Cont'd

| CODE | PART NAME AND DESCRIPTION | NO. OF CYL. | PLYMOUTH | DODGE | DESOTO | CHRYSLER AND IMPERIAL | PER CAR | PART NUMBER |
|---|---|---|---|---|---|---|---|---|
| 19-30-4 | WHEEL - Cont'd | | | | | | | |
| | Plastic, Round, Blue, PY1 | 8 | - | - | - | 60 | 1 | *2200 564 |
| | Plastic, Round, Brown, PY1 | 8 | - | - | - | 60 | 1 | *2200 566 |
| | Plastic, Round, Green, PY1 | 8 | - | - | - | 60 | 1 | *2200 565 |
| | Plastic, Round, Red, PY1 | 8 | - | - | - | - | 1 | *2200 568 |
| | Plastic Oval, Black Frost, PY1 | 8 | - | - | - | 60 | 1 | 2122 626 |
| | Plastic Oval, Blue, PY1 | 8 | - | - | - | 60 | 1 | 2122 050 |
| | Plastic Oval, Brown, PY1 | 8 | - | - | - | 60 | 1 | 2122 625 |
| | Plastic Oval, Green, PY1 | 8 | - | - | - | 60 | 1 | 2122 624 |
| | Plastic Oval, Red, PY1 | 8 | - | - | - | 60 | 1 | 2122 628 |
| 19-30-7 | COVER, Hub | 8 | - | - | 60 | - | 1 | 2122 054 |
| 19-30-18 | NUT, Wheel | 6-8 | 60 | 60 | 60 | 60 | 1 | 852 414 |

### 19-31-0 STEERING COLUMN BRACKET

| | | | | | | | | |
|---|---|---|---|---|---|---|---|---|
| 19-31-1 | BRACKET, w/Std. Trans. | 6-8 | - | 60 | - | - | 1 | 1839 979 |
| | w/Auto. Trans. | 6-8 | - | 60 | 60 | - | 1 | 1839 984 |
| | PC1 | 8 | - | - | - | 60 | 1 | 1902 223 |
| | PC2, PC3 | 8 | - | - | - | 60 | 1 | 1902 210 |
| 19-31-7 | BRACE, to Windshield Frame, Upper, PY1 | 8 | - | - | - | 60 | 1 | 1839 327 |
| 19-31-19 | STUD, Cap Attaching | 6-8 | - | 60 | 60 | - | 2 | 1901 587 |
| 19-31-24 | CAP, Bracket, w/Auto. Trans. | 6-8 | 60 | 60 | 60 | - | 1 | 1839 985 |
| | w/Std. Trans. | 6-8 | 60 | 60 | - | - | 1 | 1839 980 |
| | CAP, Bracket, PY1, PC2, PC3 | 8 | - | - | - | 60 | 1 | 1839 685 |
| | CAP, Bracket, PY1 | 8 | - | - | - | 60 | 1 | 1839 703 |
| | CLAMP, PY1 | 8 | - | - | - | 60 | 1 | 1902 340 |

### 19-46-0 GEARSHIFT ROD OR TUBE

| | | | | | | | | |
|---|---|---|---|---|---|---|---|---|
| 19-46-2 | BOOT, Rod, w/Std. Trans. | 6-8 | 60 | 60 | - | - | 1 | 2161 726 |
| 19-46-3 | TUBE, w/Std. Trans. | 6-8 | 60 | 60 | - | - | 1 | 2123 677 |
| 19-46-5 | SPRING, Tube Anti-Shake, w/Std. Trans. | 6-8 | 60 | 60 | - | - | 1 | 2123 678 |
| 19-46-9 | CUP, Tube Lever Spring Washer, w/Std. Trans. | 6-8 | 60 | 60 | - | - | 1 | 1673 948 |
| 19-46-10 | SPRING, Tube Return, w/Std. Trans. | 6-8 | 60 | 60 | - | - | 1 | 1632 808 |
| 19-46-11 | WASHER, Tube Lever Spring, w/Std. Trans. | 6-8 | 60 | 60 | - | - | 1 | 1820 387 |
| 19-46-16 | LEVER, Tube, w/Std. Trans., 2nd and High | 6-8 | 60 | 60 | - | - | 1 | 2122 039 |
| | w/Std. Trans., First and Reverse | 6-8 | 60 | 60 | - | - | 1 | 2122 038 |
| 19-46-19 | WASHER, Tube Lever, w/Std. Trans. | 6-8 | 60 | 60 | - | - | 1 | 1670 932 |
| 19-46-23 | PIN, Tube, w/Std. Trans. | 6-8 | 60 | 60 | - | - | 1 | 1946 578 |
| 19-46-24 | RETAINER, Tube Lever Pin, w/Std. Trans. | 6-8 | 60 | 60 | - | - | 1 | 2123 129 |
| 19-46-26 | SEAL, Tube Bushing Support, w/Std. Trans. | 6-8 | 60 | 60 | - | - | 1 | 2123 012 |
| 19-46-35 | RETAINER, Tube Support Seal, w/Std. Trans. | 6-8 | 60 | 60 | - | - | 1 | 2123 013 |

### 19-48-0 GEARSHIFT CONTROL RODS

| | | | | | | | | |
|---|---|---|---|---|---|---|---|---|
| 19-48-1 | ROD, w/Std. Trans., 2nd and High, PD1, PD4, UP TO | 8 | 60 (1) | 60 (1) | - | - | 1 | *1948 785 |
| | w/Std. Trans., First and Reverse, PD1, PD4, UP TO | 8 | 60 (1) | 60 (1) | - | - | 1 | *1948 786 |
| | w/Std. Trans., 2nd and High, PD1, PD4, AFTER | 8 | 60 (1) | 60 (1) | - | - | 1 | *2200 480 |
| | w/Std. Trans., First and Reverse, PD1, PD4, AFTER | 8 | 60 (1) | 60 (1) | - | - | 1 | *2200 481 |
| | w/Std. Trans., 2nd and High | 6 | 60 | 60 | - | - | 1 | 2200 480 |
| | w/Std. Trans., First and Reverse | 6 | 60 | 60 | - | - | 1 | 2200 481 |
| | w/Std. Trans., 2nd and High, PD2 | 8 | - | 60 | - | - | 1 | 2200 482 |
| | w/Std. Trans., First and Reverse, PD2 | 8 | - | 60 | - | - | 1 | 2200 483 |
| | High Performance, w/Std. Trans., 2nd and High, PD1, PD4 | 8 | 60 | 60 | - | - | 1 | 2200 482 |
| | High Performance, w/Std. Trans., First and Reverse, PD1, PD4 | 8 | 60 | 60 | - | - | 1 | 2200 483 |

NOTE 1: Engine No. 216116.



MyMopar.com

| CODE | PART NAME AND DESCRIPTION | NO. OF CYL. | PLYMOUTH | DODGE | DESOTO | CHRYSLER AND IMPERIAL | PER CAR | PART NUMBER |
|---|---|---|---|---|---|---|---|---|
| | **POWER STEERING** | | | | | | | |
| | **19-54-0 POWER STEERING OIL PUMP** | | | | | | | |
| 19-54-2 | PUMP | 6 | 60 | 60 | - | - | 1 | 2128 663 |
| | | 8 | 60 | 60 | 60 | 60 | 1 | 1947 710 |
| | PUMP PACKAGE, (see Note 1) | 8 | 60 | 60 | 60 | 60 | 1 | 2196 082 |

**POWER STEERING OIL PUMP COMPONENT PARTS**

| CODE | PART NAME | PUMP ASSEMBLIES (1) 2196 082 | (2) 2128 663 | (2) 1947 710 | (2) Production Pump on PY1 | (2) Production Pump on PP2, PD1, PD2, PD4, PS1 | (2) Production Pump on PS3, PC1, PC2, PC3 |
|---|---|---|---|---|---|---|---|
| | NOTE: Quantity 1 per vehicle unless otherwise indicated. | | | | | | |
| 19-54-29 | OIL SEAL, Pump Shaft | 2120 527 | 1734 913 | 1734 913 | 1734 913 | 1734 913 | 1734 913 |
| 19-54-32 | SPRING, Flow Control Valve | ---- --- | 1732 953 | 1732 953 | 1732 953 | 1732 953 | 1732 953 |
| 19-54-60 | FILTER, Pump | 1851 957 | ---- --- | 1851 957 | 1851 957 | 1851 957 | 1851 957 |
| 19-54-86 | PULLEY, Pump | ---- --- | 2128 578 | ---- --- | ---- --- | ---- --- | ---- --- |
| | PULLEY, Pump | ---- --- | ---- --- | ---- --- | ---- --- | 1733 488 | ---- --- |
| | PULLEY, Pump, w/o Car Cooling | 2128 337 | ---- --- | 1826 056 | 1826 056 | ---- --- | 1826 056 |
| | PULLEY, Pump, w/Car Cooling | 2128 338 | ---- --- | 1851 732 | 1947 776 | ---- --- | 1851 732 |
| | PULLEY, Pump, Drive, see Part Type Code 7-06-1 | | | | | | |
| 19-54-90 | BELT, Pump, see Chart Part Type Code 7-03-1 | | | | | | |
| 19-54-115 | BRACKET, Pump | ---- --- | 2128 577 | ---- --- | ---- --- | ---- --- | ---- --- |
| | BRACKET, Pump Mounting | 2128 323 | 2128 564 | ---- --- | ---- --- | ---- --- | ---- --- |
| | BRACKET, Pump Adjusting | 2128 324 | ---- --- | ---- --- | ---- --- | ---- --- | ---- --- |
| | BRACKET, Pump, Front | ---- --- | ---- --- | 1826 058 | 1947 584 | 1945 384 | 1826 058 |
| | BRACKET, Pump, Rear | ---- --- | ---- --- | 1826 057 | 1947 585 | 1851 314 | 1826 057 |
| 19-54-119 | WASHER, Pump Adjusting Screw Lock | ---- --- | ---- --- | 6013 067 | 6013 067 | ---- --- | 6013 067 |
| 19-54-121 | NUT, Pump Front Insert | 2120 012 | 1946 955 | 1946 955 | 1946 955 | 1946 955 | 1946 955 |
| 19-54-123 | BOLT, Pump Mounting Bracket Swivel | 2128 325 | ---- --- | ---- --- | ---- --- | ---- --- | ---- --- |
| 19-54-128 | PACKAGE, Flow Control Valve Plug and Snap Ring | ---- --- | 1879 353 | 1879 353 | 1879 353 | 1879 353 | 1879 353 |
| 19-54-131 | BUMPER, Adjusting Bracket | *1940 147 | ---- --- | ---- --- | ---- --- | ---- --- | ---- --- |
| 19-54-132 | NUT, Pump Mounting Bracket Swivel Bolt | 2129 684 | ---- --- | ---- --- | ---- --- | ---- --- | ---- --- |
| 19-54-180 | RESERVOIR | 2121 559 | 1738 647 | 1738 647 | 1738 647 | 1738 647 | 1738 647 |
| 19-54-181 | OIL SEAL, Reservoir | 2120 018 | 1732 946 | 1732 946 | 1732 946 | 1732 946 | 1732 946 |
| | OIL SEAL, Reservoir Mounting | 2120 019 | 1738 662 | 1738 662 | 1738 662 | 1738 662 | 1738 662 |
| 19-54-182 | CAP, Reservoir Filler | 2127 157 | 2120 617 | 2120 617 | 2120 617 | 2120 617 | 2120 617 |
| 19-54-183 | GASKET, Cap | ---- --- | 1732 924 | ---- --- | ---- --- | ---- --- | ---- --- |
| | SEAL, Cap | ⊟2127 159 | ---- --- | ---- --- | ---- --- | ---- --- | ---- --- |
| 19-54-188 | SEAT, Outlet Fitting Ball | 1738 683 | 1738 683 | 1738 683 | 1738 683 | 1738 683 | 1738 683 |
| 19-54-246 | VALVE, Pressure Relief, PY1 | *1944 792 | ---- --- | ---- --- | ---- --- | ---- --- | ---- --- |
| | VALVE, Pressure Relief, PP2, PD1, PD2, PD4, PS1, PS3, PC1, PC2, PC3. | *2121 600 | ---- --- | ---- --- | ---- --- | ---- --- | ---- --- |
| | VALVE, Pressure Relief | ---- --- | 1852 855 | 1859 940 | 1947 779 | 1852 855 | 1859 940 |
| 19-54-248 | GASKET, Pressure Relief Valve | 1852 920 | 1852 920 | 1852 920 | 1852 920 | 1852 920 | 1852 920 |
| 19-54-258 | OIL SEAL, Pump Front Insert | 2128 275 | ---- --- | ---- --- | ---- --- | ---- --- | ---- --- |

NOTE 1: Power Steering Pump Package 2196 082, Part Type Code 19-54-2, will be used on all 8-cylinder 1960 Passenger Cars, except with 318 cubic inch engines. This package will service only the pumps that have the automatic load reaction belt tensioner, which consists of the flexible swivel type mounting brackets.

NOTE 2: Pumps not used with load reaction belt tensioner.



MyMopar.com

# POWER STEERING

## 19-56-0 POWER STEERING GEAR PISTON

| CODE | PART NAME AND DESCRIPTION | NO. OF CYL. | PLYMOUTH | DODGE | DESOTO | CHRYSLER AND IMPERIAL | PER CAR | PART NUMBER |
|---|---|---|---|---|---|---|---|---|
| 19-56-6 | RING, Piston | 6-8 | 60 | 60 | 60 | 60 | 1 | 1822 672 |
| | "O" RING, Piston Ring | 6-8 | 60 | 60 | 60 | 60 | 1 | 1822 671 |
| 19-56-83 | SPRING, Pressure Control Valve, Lower | 6-8 | 60 | 60 | 60 | 60 | 1 | 1822 442 |
| 19-56-90 | "O" RING, Pressure Control Valve | 6-8 | 60 | 60 | 60 | 60 | 1 | 1536 268 |

## 19-57-0 POWER STEERING GEAR VALVES

| | | | | | | | | |
|---|---|---|---|---|---|---|---|---|
| 19-57-2 | PISTON and SPRING PACKAGE, Pressure Control Valve | 6-8 | 60 | 60 | 60 | 60 | 1 | 1879 509 |
| 19-57-3 | VALVE, used w/o Ram Manifold, PC1 | 6-8 | 60 | 60 | 60 | 60 | 1 | 1823 148 |
| | Used w/Ram Manifold, PC3 | 8 | 60 | 60 | 60 | 60 | 1 | 1948 662 |
| | PC2, PC3, PY1 | 8 | - | - | - | 60 | 1 | 1944 004 |
| 19-57-13 | "O" RING, Valve Housing | 6-8 | 60 | 60 | 60 | 60 | 1 | 1733 612 |
| 19-57-63 | LEVER, Valve | 6-8 | 60 | 60 | 60 | 60 | 1 | 1822 380 |
| 19-57-64 | SPRING, Valve Lever | 6-8 | 60 | 60 | 60 | 60 | 1 | 1822 871 |

## 19-58-0 POWER STEERING GEAR HOSE

| | | | | | | | | |
|---|---|---|---|---|---|---|---|---|
| 19-58-7 | HOSE, Pressure | 6 | 60 | 60 | - | - | 1 | 2200 576 |
| | Not used w/Auto. Pilot, Ram Manifold | 8 | 60 (1) | 60 (1) | 60 (1) | 60 (1) | 1 | ⊟2201 765 |
| | Not used w/Ram Manifold, Auto. Pilot | 8 | 60 (2) | 60 (2) | 60 (2) | 60 (2) | 1 | *2123 717 |
| | w/Ram Manifold, Auto. Pilot | 8 | 60 (2) | 60 (2) | 60 (2) | 60 (2) | 1 | *2123 718 |
| | w/Auto. Pilot, Ram Manifold | 8 | - | 60 (1) | 60 (1) | 60 (1) | 1 | ⊟2201 764 |
| 19-58-9 | BUMPER, Pressure Hose, w/Ram Manifold, PC3 | 8 | 60 | 60 | 60 | 60 | 1 | 1637 502 |
| | w/Auto. Pilot | 8 | - | 60 | 60 | 60 | 1 | 1637 502 |
| 19-58-14 | HOSE, Return | 6-8 | 60 | 60 | 60 | 60 | 1 | 2200 560 |
| 19-58-30 | ADAPTER, Pressure Hose, on Housing | 6-8 | 60 | 60 | 60 | 60 | 1 | 1618 610 |
| 19-58-31 | GASKET, Pressure Hose Adapter, on Housing | 6-8 | 60 | 60 | 60 | 60 | 1 | 1618 611 |

NOTE 1: Use on Pumps with load reaction belt tensioner.

NOTE 2: Not used on Pumps with load reaction belt tensioner.

## NOTES

★ Indicates use as required. Numerals in parentheses ( ) refer to notes. Printed in U.S.A.
⊟ Indicates parts not listed in any previous parts book. Prices and specifications subject to change without notice.
* Indicates change or addition.



Dec. 9, 1960 Supersedes April 20, 1960.

MyMopar.com

| CODE | PART NAME AND DESCRIPTION | NO. OF CYL. | PLYMOUTH | DODGE | DESOTO | CHRYSLER AND IMPERIAL | PER CAR | PART NUMBER |
|---|---|---|---|---|---|---|---|---|

## NOTES



MyMopar.com

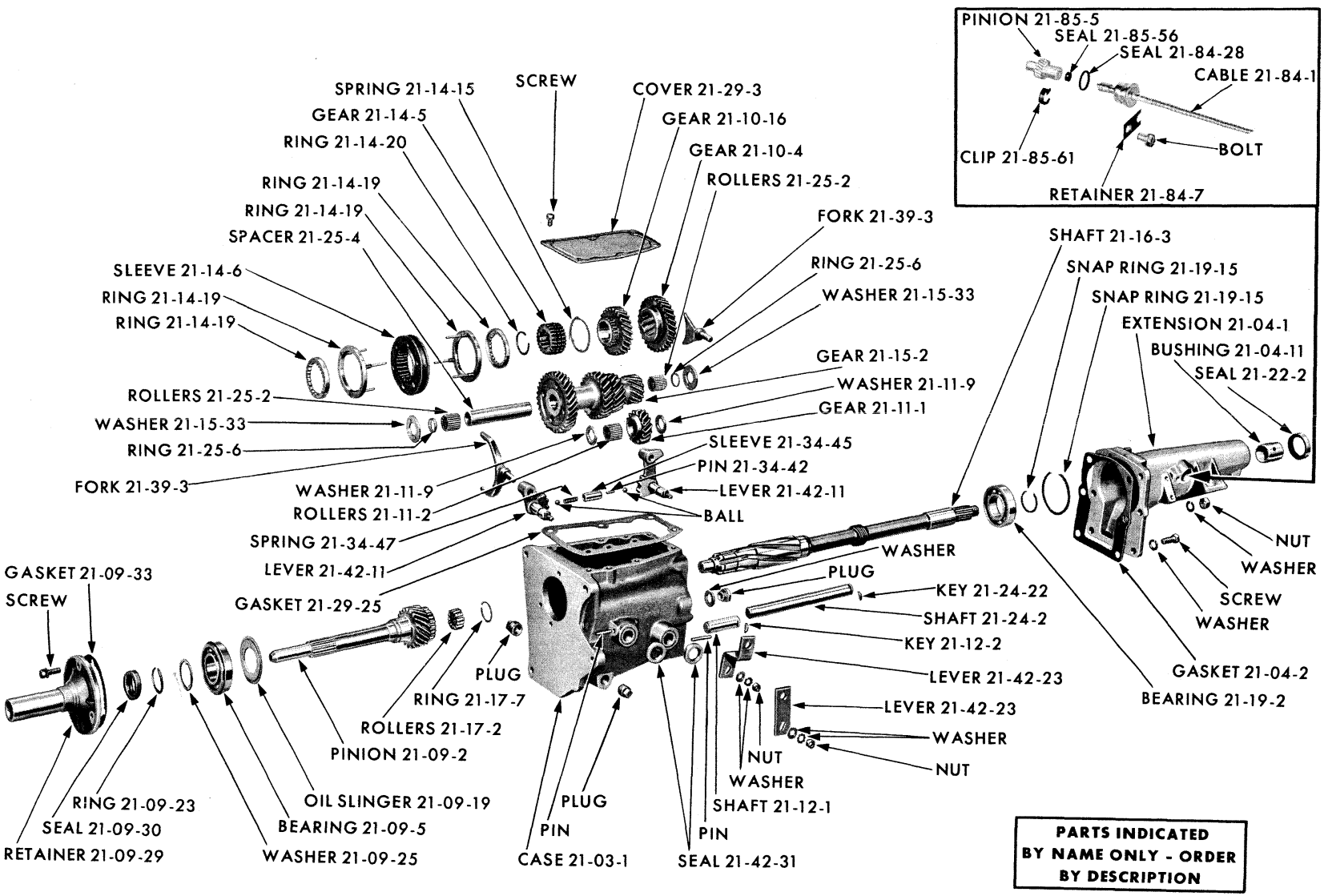


STANDARD TRANSMISSION - 6 CYLINDER

MyMopar.com

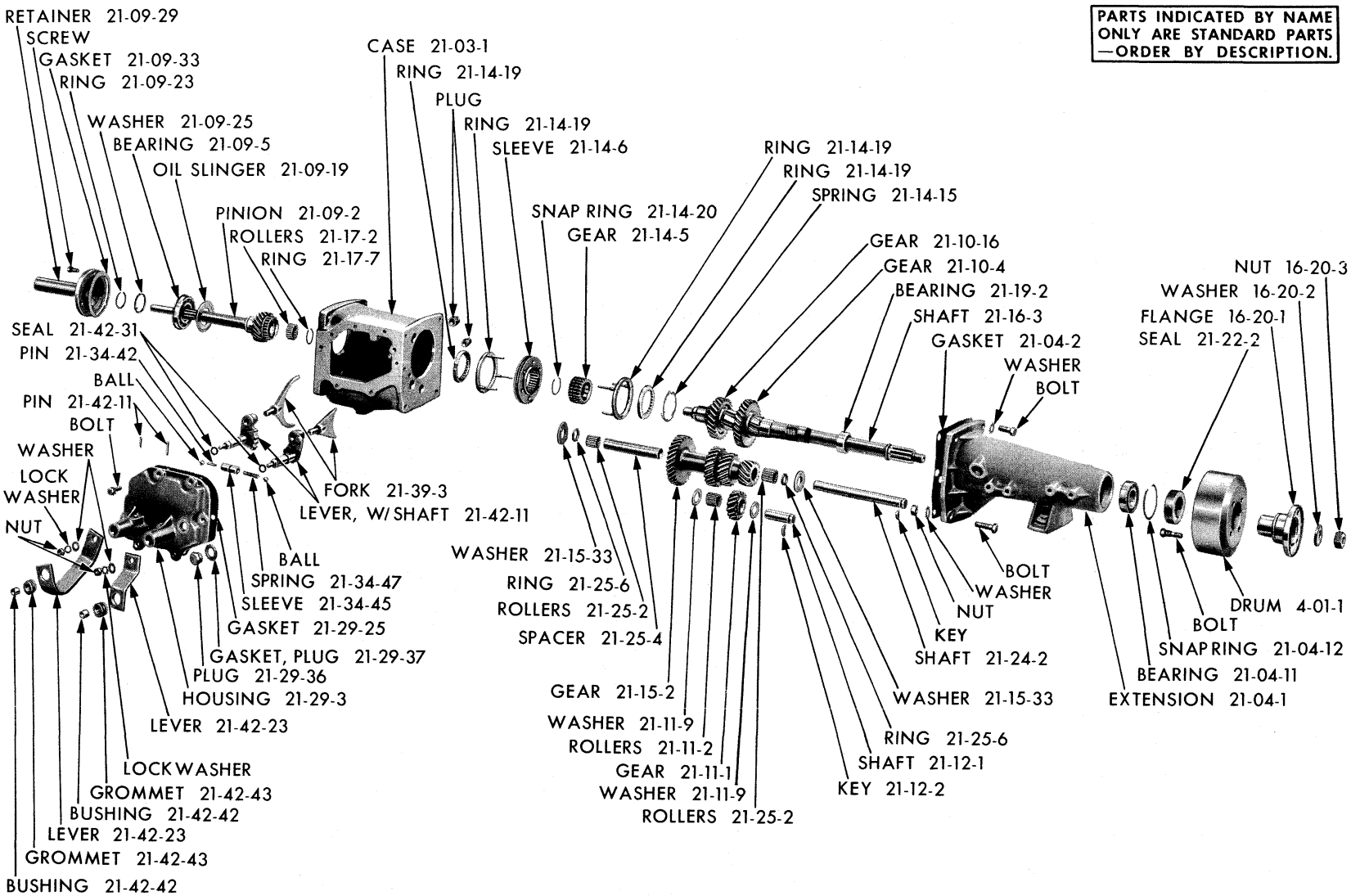


19x8241C

STANDARD TRANSMISSION - V8 CYLINDER

MyMopar.com

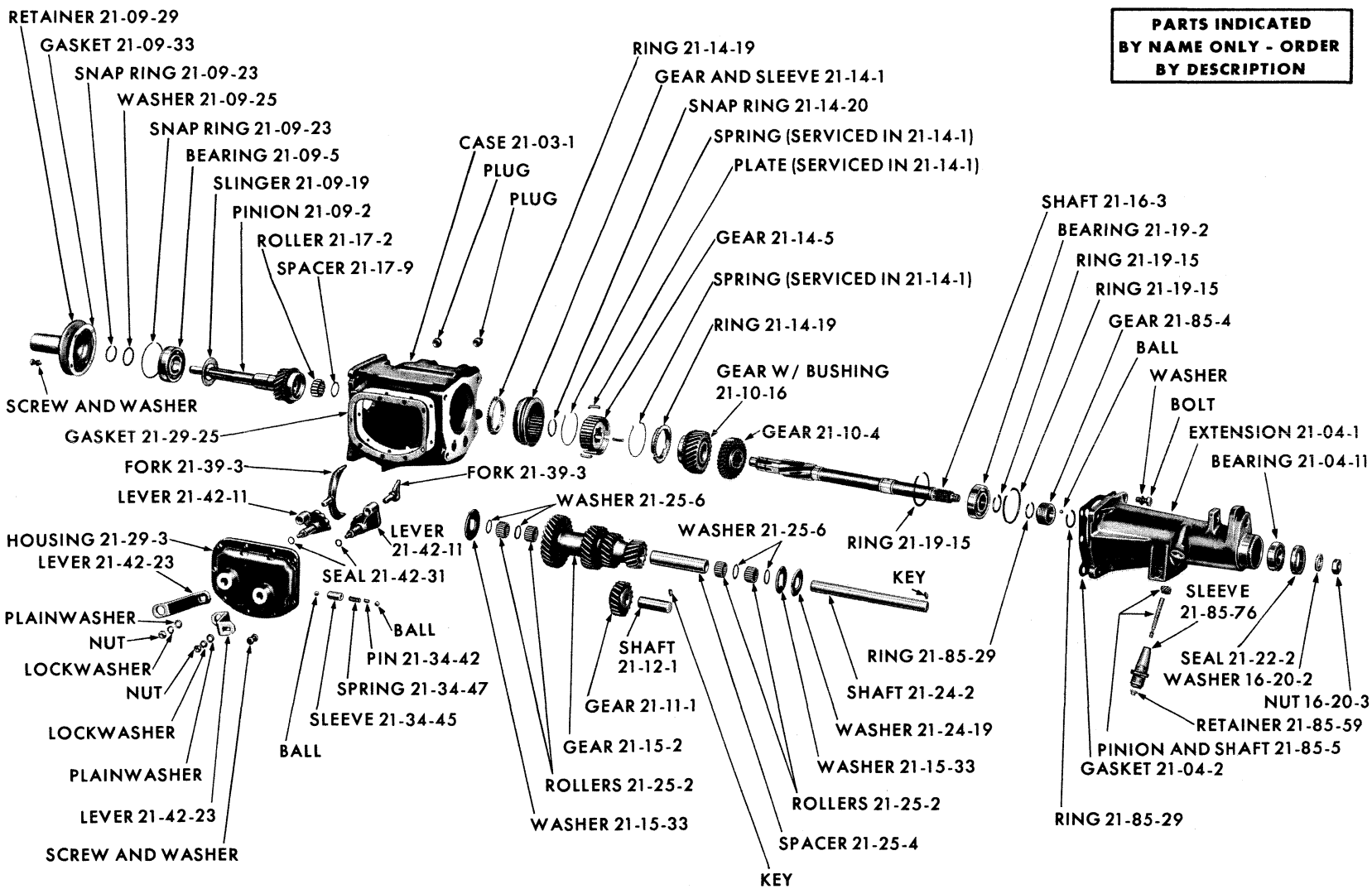


STANDARD TRANSMISSION - V8 CYLINDER (USED WITH 361 AND 383 CU. IN. ENGINES)

MyMopar.com

| CODE | PART NAME AND DESCRIPTION | NO. OF CYL. | PLYMOUTH | DODGE | DESOTO | CHRYSLER AND IMPERIAL | PER CAR | PART NUMBER |
|---|---|---|---|---|---|---|---|---|

## NOTES


MyMopar.com

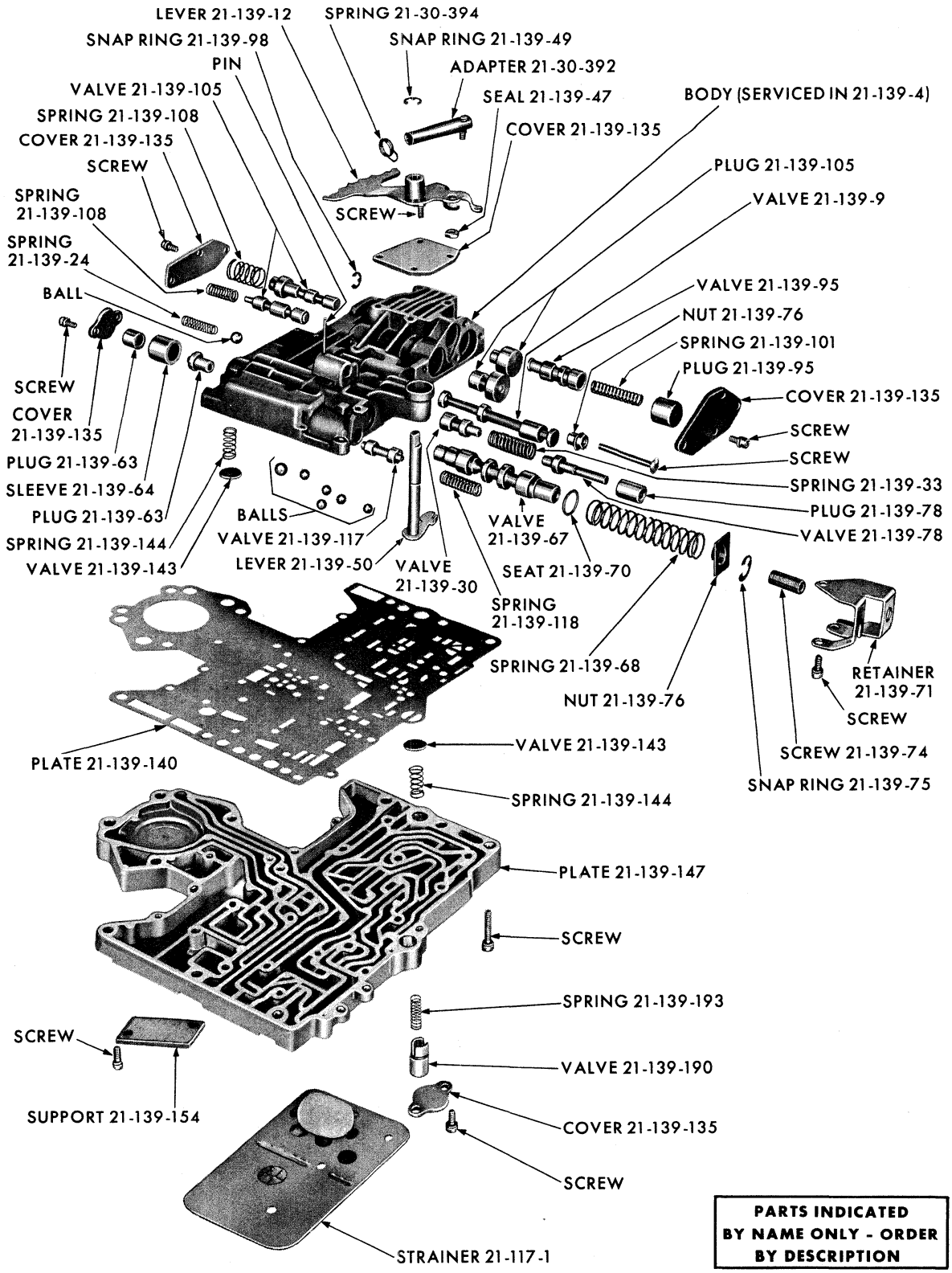


**PARTS INDICATED BY NAME ONLY - ORDER BY DESCRIPTION**

19x8761



MyMopar.com

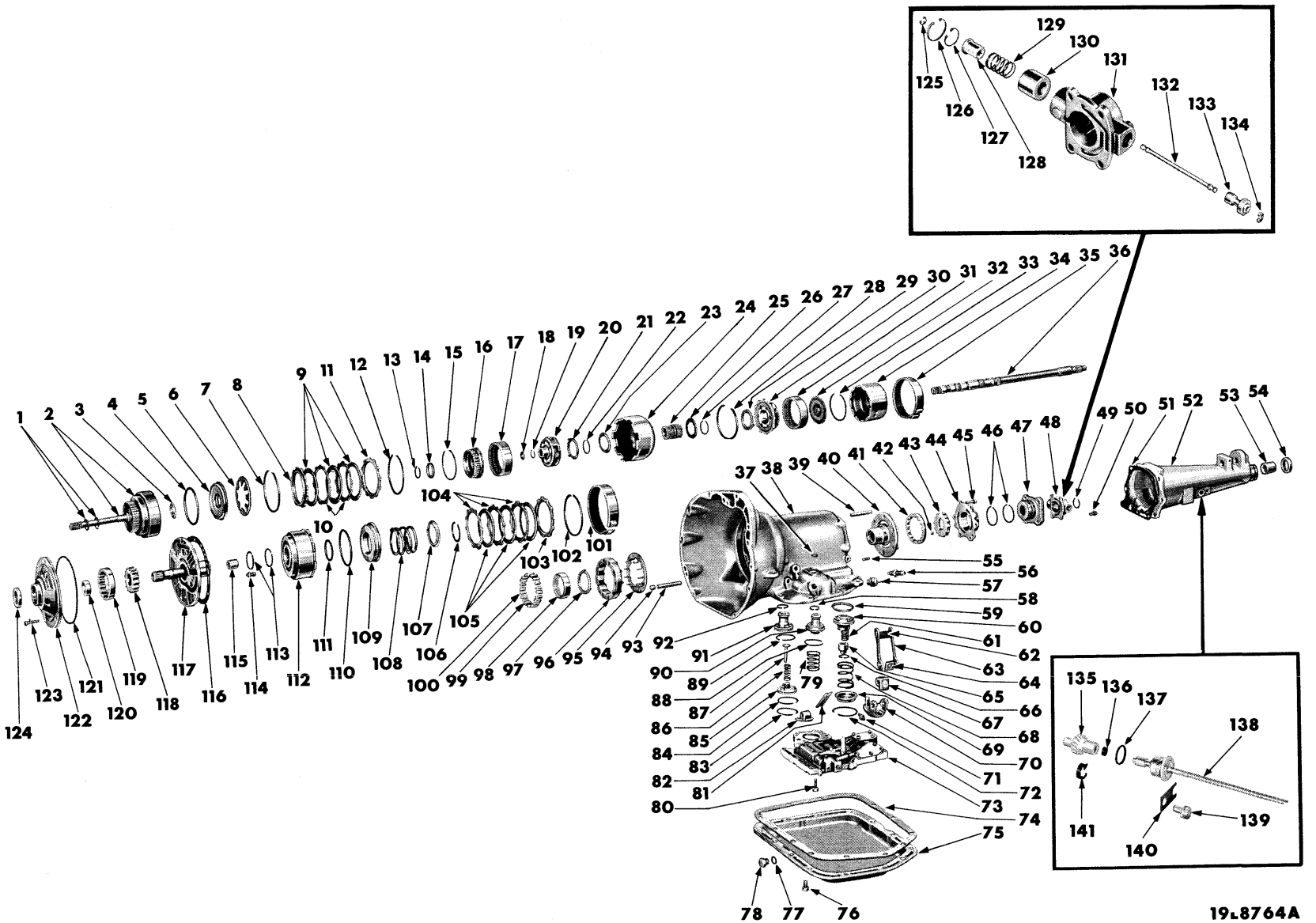


AUTOMATIC 3-SPEED TRANSMISSION - 6 CYLINDER

MyMopar.com

AUTOMATIC 3-SPEED TRANSMISSION - 6 CYLINDER

| Ref. No. | Name | Part Type Code |
|---|---|---|
| 1 | Seal | 21-129-7 |
| 2 | Shaft | 21-129-5 |
| 3 | Seal | 21-133-17 |
| 4 | Seal | 21-133-17 |
| 5 | Piston | 21-133-15 |
| 6 | Spring | 21-133-20 |
| 7 | Ring | 21-133-25 |
| 8 | Plate | 21-133-39 |
| 9 | Disc | 21-133-36 |
| 10 | Plate | 21-133-38 |
| 11 | Plate | 21-133-39 |
| 12 | Ring | 21-133-43 |
| 13 | Ring | 21-134-40 |
| 14 | Washer | 21-134-45 |
| 15 | Ring | 21-134-40 |
| 16 | Support | 21-134-36 |
| 17 | Gear | 21-134-38 |
| 18 | Washer | 21-05-35 |
| 19 | Ring | 21-05-19 |
| 20 | Carrier | 21-134-5 |
| 21 | Washer | 21-133-48 |
| 22 | Ring | 21-133-46 |
| 23 | Plate | 21-133-47 |
| 24 | Shell | 21-133-42 |
| 25 | Gear | 21-133-40 |
| 26 | Plate | 21-133-47 |
| 27 | Ring | 21-133-46 |
| 28 | Ring | 21-136-68 |
| 29 | Washer | 21-133-48 |
| 30 | Carrier | 21-134-5 |
| 31 | Gear | 21-134-38 |
| 32 | Support | 21-134-36 |
| 33 | Ring | 21-134-40 |
| 34 | Drum | 21-136-65 |
| 35 | Band | 21-136-30 |
| 36 | Shaft | 21-05-1 |
| 37 | Nut | |
| 38 | Case | 21-03-1 |
| 39 | Shaft | 21-136-49 |
| 40 | Housing | 21-118-40 |
| 41 | Rotor | 21-118-7 |
| 42 | Ball | |
| 43 | Rotor (Serviced in 21-118-6) | |
| 44 | Cover | 21-118-53 |
| 45 | Screw | |
| 46 | Ring | 21-138-38 |
| 47 | Support | 21-138-10 |
| 48 | Housing (Serviced in 21-138-2) | |
| 49 | Ring | 21-138-7 |
| 50 | Screw | 21-138-6 |
| 51 | Gasket | 21-04-2 |
| 52 | Extension | 21-04-1 |
| 53 | Bushing | 21-04-11 |
| 54 | Seal | 21-05-12 |
| 55 | Pin | |
| 56 | Screw | 21-136-17 |
| 57 | Switch | 21-113-24 |
| 58 | Ring | 21-137-202 |
| 59 | Ring | 21-137-50 |
| 60 | Piston | 21-137-35 |
| 61 | Spring | 21-137-41 |
| 62 | Anchor | 21-136-41 |
| 63 | Link | 21-136-44 |
| 64 | Strut | 21-136-41 |
| 65 | Plug | 21-137-47 |
| 66 | Ring | 21-137-44 |
| 67 | Lever | 21-136-47 |
| 68 | Spring | 21-137-53 |
| 69 | Retainer | 21-137-56 |
| 70 | Lever | 21-136-47 |
| 71 | Screw | 21-136-52 |
| 72 | Ring | 21-137-59 |
| 73 | Body, w/Plate | 21-139-4 |
| 74 | Gasket | 21-119-5 |
| 75 | Pan | 21-119-3 |
| 76 | Screw | 21-119-3 |
| 77 | Gasket | |
| 78 | Plug | |
| 79 | Spring | 21-137-205 |
| 80 | Screw | |
| 81 | Strut | 21-136-15 |
| 82 | Lever | 21-136-20 |
| 83 | Ring | 21-137-19 |
| 84 | Ring | 21-137-8 |
| 85 | Guide | 21-137-13 |
| 86 | Spring | 21-137-22 |
| 87 | Rod | 21-137-11 |
| 88 | Ring | 21-137-202 |
| 89 | Ring | 21-137-8 |
| 90 | Piston | 21-137-200 |
| 91 | Piston | 21-137-5 |
| 92 | Ring | 21-137-8 |
| 93 | Shaft | 21-136-23 |
| 94 | Plug | |
| 95 | Retainer (Serviced in 21-03-1) | |
| 96 | Cam (Serviced in 21-03-1) | |
| 97 | Washer | 21-136-237 |
| 98 | Race | 21-136-232 |
| 99 | Spring | 21-136-236 |
| 100 | Roller | 21-136-235 |
| 101 | Band | 21-136-5 |
| 102 | Ring | 21-133-43 |
| 103 | Plate | 21-133-39 |
| 104 | Plate | 21-133-38 |
| 105 | Disc | 21-33-36 |
| 106 | Ring | 21-133-43 |
| 107 | Retainer | 21-133-22 |
| 108 | Spring | 21-133-20 |
| 109 | Piston | 21-133-15 |
| 110 | Seal | 21-133-17 |
| 111 | Seal | 21-133-17 |
| 112 | Retainer | 21-133-7 |
| 113 | Ring | 21-129-13 |
| 114 | Screw | |
| 115 | Bushing | 21-129-23 |
| 116 | Gasket | 21-129-24 |
| 117 | Shaft, w/Support | 21-129-10 |
| 118 | Rotor, Inner | 21-118-8 |
| 119 | Rotor (Serviced in 21-118-6) | |
| 120 | Bushing | 21-118-47 |
| 121 | Seal | 21-118-45 |
| 122 | Housing | 21-118-40 |
| 123 | Screw | 21-118-55 |
| 124 | Seal | 21-118-42 |
| 125 | Ring | 21-138-29 |
| 126 | Ring | 21-138-19 |
| 127 | Ring | 21-138-19 |
| 128 | Weight | 21-138-13 |
| 129 | Spring | 21-138-15 |
| 130 | Weight | 21-138-13 |
| 131 | Body (Serviced in 21-138-2) | |
| 132 | Shaft | 21-138-26 |
| 133 | Valve | 21-138-23 |
| 134 | Ring | 21-138-29 |
| 135 | Pinion | 21-85-5 |
| 136 | Seal | 21-85-56 |
| 137 | Seal | 21-84-28 |
| 138 | Cable | 21-84-1 |
| 139 | Bolt | |
| 140 | Retainer | 21-84-7 |
| 141 | Clip | 21-85-61 |

PARTS INDICATED BY NAME ONLY - ORDER BY DESCRIPTION



MyMopar.com

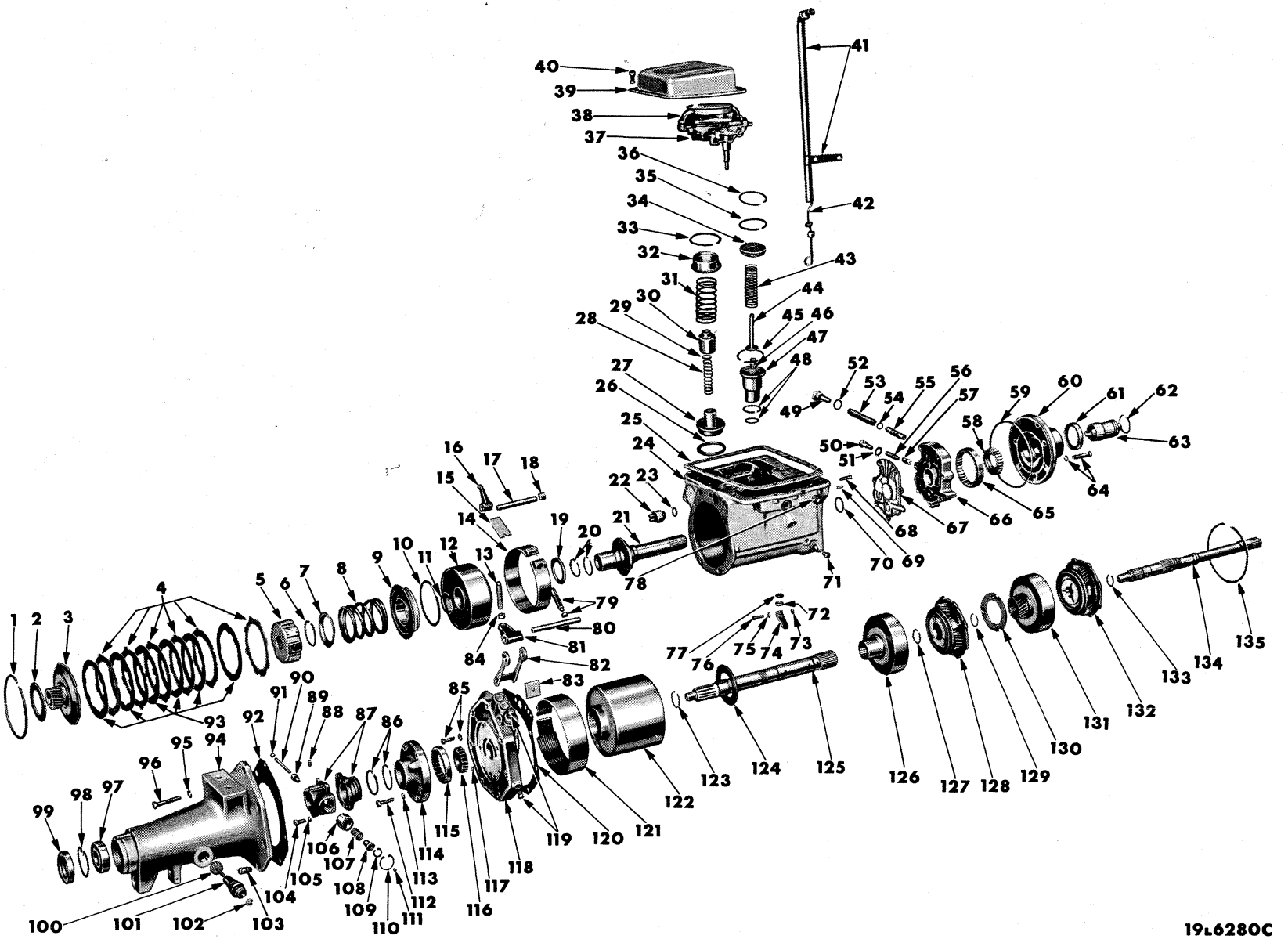


POWERFLITE TRANSMISSION - V8 CYLINDER

MyMopar.com

## POWERFLITE TRANSMISSION - V8 CYLINDER

| Ref. No. | Name | Part Type Code |
|---|---|---|
| 1 | Snap Ring | 21-133-43 |
| 2 | Washer | 21-134-30 |
| 3 | Sun Gear Assembly | 21-133-40 |
| 4 | Plate | 21-133-38 |
| 5 | Hub | 21-133-35 |
| 6 | Snap Ring | 21-133-25 |
| 7 | Retainer | 21-133-22 |
| 8 | Spring | 21-133-20 |
| 9 | Piston | 21-133-15 |
| 10 | Ring | 21-133-17 |
| 11 | Ring | 21-133-12 |
| 12 | Retainer | 21-133-7 |
| 13 | Screw | 21-136-52 |
| 14 | Band, Kickdown | 21-136-5 |
| 15 | Strut | 21-136-15 |
| 16 | Lever | 21-136-20 |
| 17 | Shaft | 21-136-23 |
| 18 | Plug | 21-136-23 |
| 19 | Washer | 21-133-30 |
| 20 | Ring | 21-129-13 |
| 21 | Shaft | 21-129-10 |
| 22 | Switch Package | 21-113-24 |
| 23 | Washer | 21-113-29 |
| 24 | Case | 21-03-1 |
| 25 | Pan Gasket | 21-119-5 |
| 26 | Ring | 21-137-50 |
| 27 | Piston | 21-137-35 |
| 28 | Spring | 21-137-41 |
| 29 | Snap Ring | 21-137-44 |
| 30 | Plug | 21-137-47 |
| 31 | Spring | 21-137-53 |
| 32 | Retainer | 21-137-56 |
| 33 | Snap Ring | 21-137-59 |
| 34 | Guide | 21-137-13 |
| 35 | Ring | 21-137-16 |
| 36 | Snap Ring | 21-137-19 |
| 37 | Valve Body and Transfer Plate | 21-139-4 |
| 38 | Strainer | 21-117-1 |
| 39 | Pan | 21-119-3 |
| 40 | Screw and Washer | 21-119-3 |
| 41 | Tube, w/Bracket | 21-119-15 |
| 42 | Indicator | 21-119-19 |
| 43 | Spring | 21-137-22 |
| 44 | Rod | 21-137-11 |
| 45 | Ring | 21-137-8 |
| 46 | Spring | 21-137-20 |
| 47 | Piston | 21-137-5 |
| 48 | Ring | 21-137-8 |
| 49 | Retainer | 21-131-25 |
| 50 | Retainer | 21-131-45 |
| 51 | Gasket | 21-131-50 |
| 52 | Gasket | 21-131-27 |
| 53 | Spring | 21-131-15 |
| 54 | Seat | 21-131-20 |
| 55 | Valve | 21-131-10 |
| 56 | Spring | 21-131-40 |
| 57 | Valve | 21-131-35 |
| 58 | Front Oil Pump Pinion | 21-118-6 |
| 59 | Oil Seal | 21-118-45 |
| 60 | Housing | 21-118-40 |
| 61 | Oil Seal | 21-118-42 |
| 62 | Ring | 21-118-38 |
| 63 | Sleeve, w/Ring | 21-118-37 |
| 64 | Screw and Washer | |
| 65 | Front Oil Pump Gear | 21-118-6 |
| 66 | Body Package | 21-131-1 |
| 67 | Gasket | 21-131-6 |
| 68 | Screw | |
| 69 | Dowel | 21-129-16 |
| 70 | Seal | 21-129-12 |
| 71 | Plug | |
| 72 | Retainer | 21-139-45 |
| 73 | Nut | |
| 74 | Lever | 21-142-12 |
| 75 | Washer | |
| 76 | Screw | |
| 77 | Felt | 21-139-42 |
| 78 | Plug | |
| 79 | Screw and Nut | 21-136-17 |
| 80 | Shaft | 21-136-49 |
| 81 | Lever | 21-136-47 |
| 82 | Link | 21-136-44 |
| 83 | Strut | 21-136-41 |
| 84 | Nut | |
| 85 | Screw and Washer | |
| 86 | Rings | 21-138-38 |
| 87 | Support, Serviced in Repair Package. | 21-138-2 |
| 88 | Screw | 21-138-9 |
| 89 | Valve | 21-138-23 |
| 90 | Shaft | 21-138-26 |
| 91 | Snap Ring | 21-138-29 |
| 92 | Gasket | 21-04-2 |
| 93 | Disc | 21-133-36 |
| 94 | Extension | 21-04-1 |
| 95 | Washers | |
| 96 | Screw | |
| 97 | Bearing | 21-05-2 |
| 98 | Snap Ring | 21-05-8 |
| 99 | Oil Seal | 21-05-12 |
| 100 | Pinion | 21-85-5 |
| 101 | Sleeve | 21-85-59 |
| 102 | Retainer | 21-85-76 |
| 103 | Breather | 21-02-6 |
| 104 | Screw | 21-138-6 |
| 105 | Washer | |
| 106 | Primary Weight | 21-138-13 |
| 107 | Spring | 21-138-15 |
| 108 | Secondary Weight | 21-138-13 |
| 109 | Secondary Snap Ring | 21-138-19 |
| 110 | Snap Ring | 21-138-19 |
| 111 | Snap Ring | 21-138-29 |
| 112 | Screw | |
| 113 | Washer | |
| 114 | Housing | 21-118-40 |
| 115 | Rear Oil Pump Gear | 21-118-7 |
| 116 | Rear Oil Pump Pinion | 21-118-8 |
| 117 | Ball | 21-118-8 |
| 118 | Support | 21-05-25 |
| 119 | Plugs | |
| 120 | Gasket | 21-05-26 |
| 121 | Reverse Band | 21-136-30 |
| 122 | Housing | 21-135-33 |
| 123 | Ring | 21-05-18 |
| 124 | Washer | 21-135-35 |
| 125 | Shaft | 21-05-1 |
| 126 | Reverse Gear | 21-135-25 |
| 127 | Snap Ring | 21-135-28 |
| 128 | Reverse Pinion Carrier | 21-135-5 |
| 129 | Snap Ring | 21-134-40 |
| 130 | Washer | 21-134-30 |
| 131 | Kickdown Gear | 21-134-38 |
| 132 | Kickdown Pinion Carrier | 21-134-5 |
| 133 | Ring | 21-134-40 |
| 134 | Input Shaft | 21-129-5 |
| 135 | Snap Ring | 21-134-33 |

PARTS INDICATED BY NAME ONLY ARE STANDARD PARTS - ORDER BY DESCRIPTION



MyMopar.com

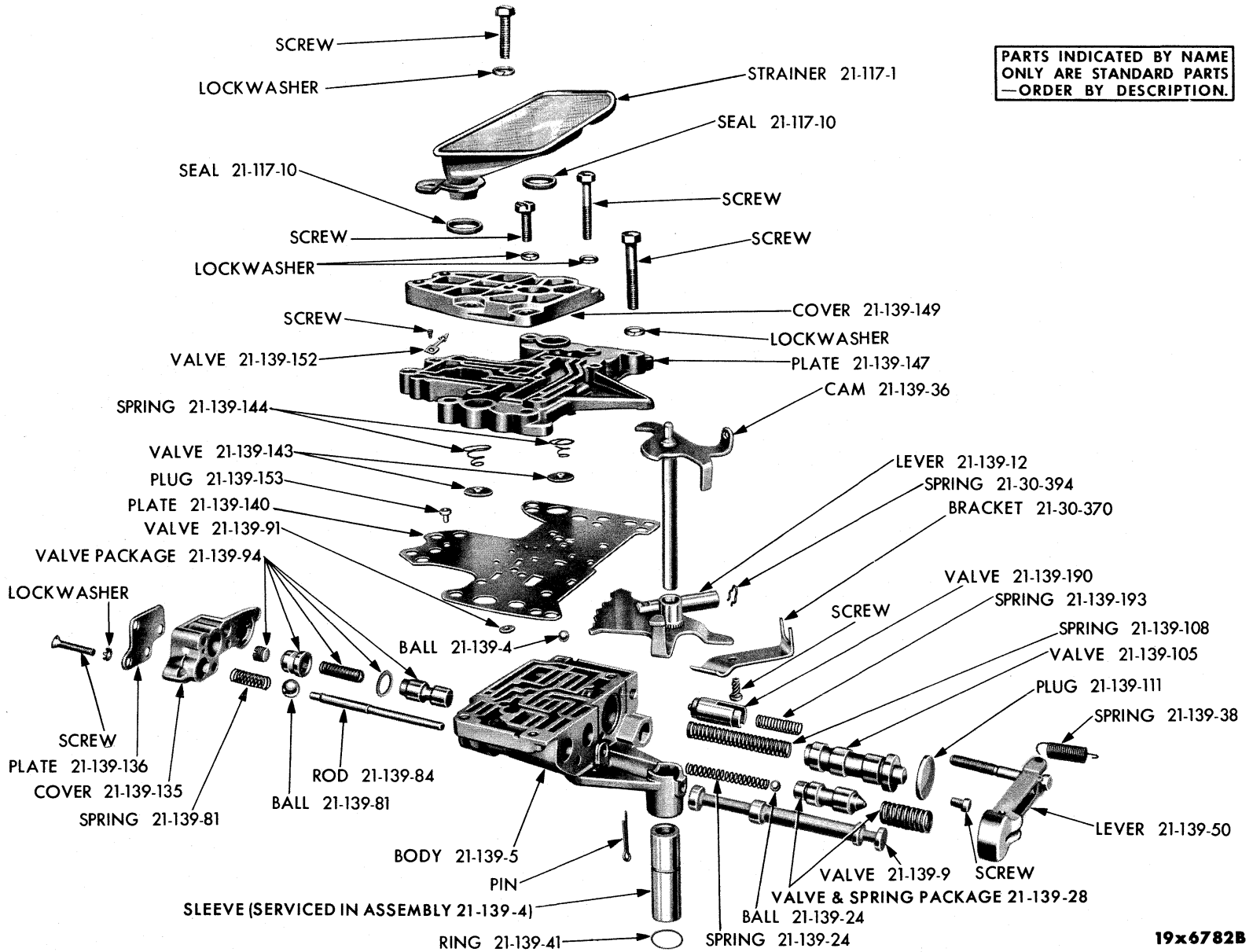


POWERFLITE TRANSMISSION (V8 CYLINDER) - VALVE AND TRANSFER PLATE

MyMopar.com

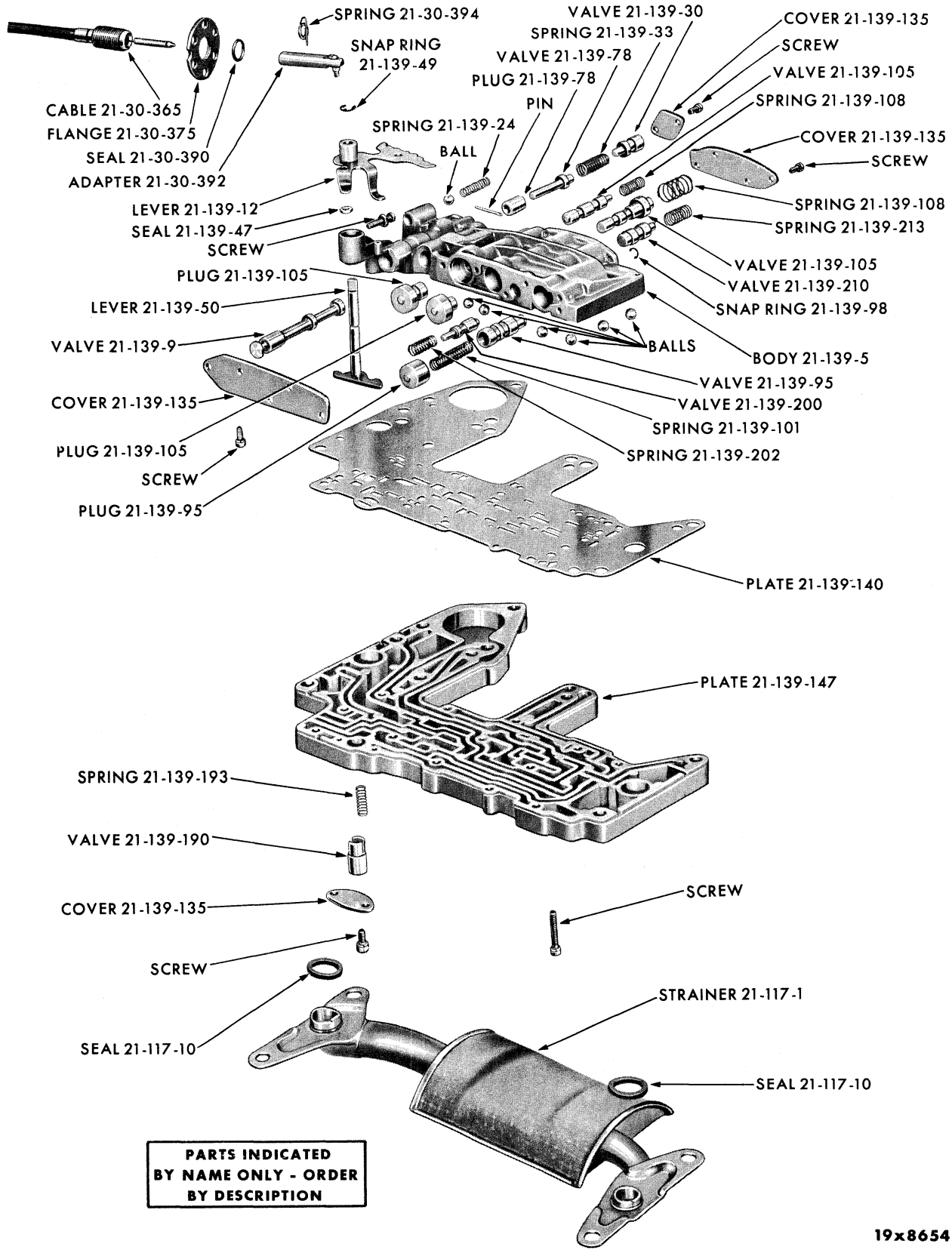
SPRING 21-30-394
SNAP RING 21-139-49
CABLE 21-30-365
FLANGE 21-30-375
SEAL 21-30-390
ADAPTER 21-30-392
LEVER 21-139-12
SEAL 21-139-47
SCREW
PLUG 21-139-105
LEVER 21-139-50
VALVE 21-139-9
COVER 21-139-135
PLUG 21-139-105
SCREW
PLUG 21-139-95
VALVE 21-139-30
SPRING 21-139-33
VALVE 21-139-78
PLUG 21-139-78
PIN
SPRING 21-139-24
BALL
COVER 21-139-135
SCREW
VALVE 21-139-105
SPRING 21-139-108
COVER 21-139-135
SCREW
SPRING 21-139-108
SPRING 21-139-213
VALVE 21-139-105
VALVE 21-139-210
SNAP RING 21-139-98
BALLS
BODY 21-139-5
VALVE 21-139-95
VALVE 21-139-200
SPRING 21-139-101
SPRING 21-139-202
PLATE 21-139-140
PLATE 21-139-147
SPRING 21-139-193
VALVE 21-139-190
COVER 21-139-135
SCREW
SCREW
SEAL 21-117-10
STRAINER 21-117-1
SEAL 21-117-10
PARTS INDICATED BY NAME ONLY - ORDER BY DESCRIPTION
19x8654



MyMopar.com

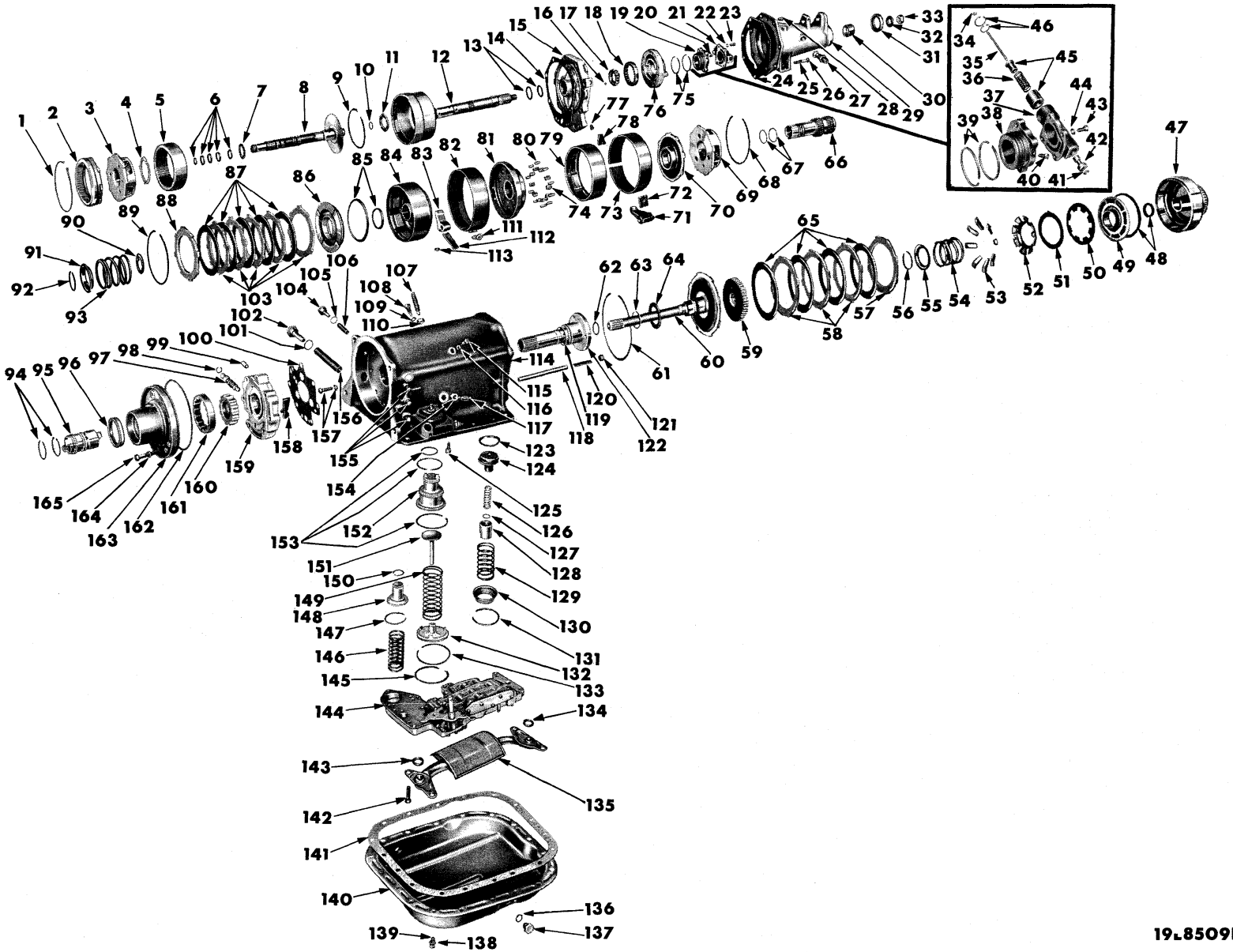


AUTOMATIC 3-SPEED TRANSMISSION - V8 CYLINDER

MyMopar.com

## AUTOMATIC 3-SPEED TRANSMISSION - V8 CYLINDER

| Ref. No. | Name | Part Type Code |
|---|---|---|
| 1 | Snap Ring | 21-135-9 |
| 2 | Gear, Reverse Annulus | 21-135-25 |
| 3 | Carrier, Kickdown | 21-134-5 |
| 4 | Washer | 21-134-30 |
| 5 | Gear, Kickdown Annulus | 21-134-38 |
| 6 | Ring | 21-129-33 |
| 7 | Washer or Bearing | 21-134-51 |
| 8 | Shaft, Intermediate | 21-129-30 |
| 9 | Snap Ring | 21-134-40 |
| 10 | Ring, Small | 21-129-33 |
| 11 | Washer | 21-05-35 |
| 12 | Shaft, Output | 21-05-1 |
| 13 | Ring | 21-05-18 |
| 14 | Gasket | 21-05-26 |
| 15 | Support, Output Shaft | 21-05-25 |
| 16 | Ball | |
| 17 | Pinion | 21-118-8 |
| 18 | Gear | 21-118-7 |
| 19 | Support, Serviced in Package | 21-138-2 |
| 20 | Screw | 21-138-9 |
| 21 | Body, Serviced in Package | 21-138-2 |
| 22 | Washer | |
| 23 | Screw | 21-138-6 |
| 24 | Gasket | 21-04-2 |
| 25 | Washer | |
| 26 | Bolt | |
| 27 | Pinion, Retainer, Sleeve | 21-85-5 |
| 28 | Breather | 21-02-6 |
| 29 | Extension | 21-04-1 |
| 30 | Bushing | 21-04-11 |
| 31 | Oil Seal | 21-05-12 |
| 32 | Washer | 16-02-2 |
| 33 | Nut | 16-02-3 |
| 34 | Snap Ring | 21-138-29 |
| 35 | Shaft | 21-138-26 |
| 36 | Spring | 21-138-15 |
| 37 | Body, Serviced in Package | 21-138-2 |
| 38 | Support, Serviced in Package | 21-138-2 |
| 39 | Rings | 21-138-38 |
| 40 | Screw | 21-138-9 |
| 41 | Snap Ring | 21-138-29 |
| 42 | Valve | 21-138-23 |
| 43 | Screw | 21-138-6 |
| 44 | Washer | |
| 45 | Weight | 21-138-13 |
| 46 | Snap Ring | 21-138-19 |
| 47 | Retainer, Front Clutch | 21-133-7 |
| 48 | Ring | 21-133-17 |
| 49 | Piston, Front Clutch | 21-133-15 |
| 50 | Spring | 21-133-70 |
| 51 | Washer | 21-133-71 |
| 52 | Retainer | 21-133-34 |
| 53 | Levers, Front Clutch | 21-133-32 |
| 54 | Spring | 21-133-20 |
| 55 | Retainer | 21-133-22 |
| 56 | Snap Ring | 21-133-25 |
| 57 | Plate | 21-133-39 |
| 58 | Plate | 21-133-38 |
| 59 | Hub, Driving Disc | 21-133-35 |
| 60 | Shaft, Input | 21-129-5 |
| 61 | Snap Ring | 21-133-43 |
| 62 | Ring, Small | 21-129-7 |
| 63 | Ring, Large | 21-129-7 |
| 64 | Washer | 21-129-8 |
| 65 | Disc | 21-133-36 |
| 66 | Gear, Reverse Sun | 21-134-50 |
| 67 | Ring | 21-133-45 |
| 68 | Snap Ring | 21-136-68 |
| 69 | Carrier, Low & Reverse | 21-135-50 |
| 70 | Hub, "O" Running Clutch | 21-136-230 |
| 71 | Lever, Low & Reverse Band | 21-136-200 |
| 72 | Strut, Reverse Band | 21-136-41 |
| 73 | Band, Low & Reverse | 21-136-80 |
| 74 | Spring | 21-136-236 |
| 75 | Rings | 21-138-38 |
| 76 | Housing, Rear Pump | 21-118-40 |
| 77 | Plug | |
| 78 | Anchor, Reverse Band | 21-136-41 |
| 79 | Drum, Low & Reverse | 21-136-210 |
| 80 | Roller | 21-136-235 |
| 81 | Support, Intermediate | 21-136-214 |
| 82 | Band, Kickdown | 21-136-5 |
| 83 | Lever, Kickdown Band | 21-136-20 |
| 84 | Retainer, Rear Clutch | 21-133-7 |
| 85 | Ring | 21-133-17 |
| 86 | Piston, Rear Clutch | 21-133-15 |
| 87 | Disc | 21-133-36 |
| 88 | Plate | 21-133-39 |
| 89 | Snap Ring | 21-133-43 |
| 90 | Washer | 21-133-30 |
| 91 | Retainer | 21-133-22 |
| 92 | Snap Ring | 21-133-25 |
| 93 | Spring | 21-133-20 |
| 94 | Ring | 21-118-38 |
| 95 | Sleeve, Serviced in Package | 21-118-9 |
| 96 | Seal | 21-118-42 |
| 97 | Valve, Retainer | 21-131-10 |
| 98 | Seat | 21-131-20 |
| 99 | Valve | 21-131-35 |
| 100 | Gasket | 21-131-6 |
| 101 | Gasket | 21-131-27 |
| 102 | Retainer | 21-131-25 |
| 103 | Plate | 21-133-38 |
| 104 | Retainer | 21-131-45 |
| 105 | Gasket | 21-131-50 |
| 106 | Spring | 21-131-40 |
| 107 | Screw | 21-136-17 |
| 108 | Screw | 21-136-225 |
| 109 | Washer | |
| 110 | Nut | |
| 111 | Anchor, Kickdown Band | 21-136-15 |
| 112 | Strut, Kickdown Band | 21-136-15 |
| 113 | Seal | 21-139-47 |
| 114 | Case | 21-03-1 |
| 115 | Screw | 21-136-225 |
| 116 | Washer | |
| 117 | Screw | 21-136-52 |
| 118 | Shaft | 21-137-32 |
| 119 | Ring | 21-129-13 |
| 120 | Spacer | 21-137-33 |
| 121 | Plug | |
| 122 | Shaft, Reaction | 21-129-10 |
| 123 | Ring | 21-137-50 |
| 124 | Piston, Reverse Servo | 21-137-35 |
| 125 | Screw | |
| 126 | Spring | 21-137-41 |
| 127 | Snap Ring | 21-137-44 |
| 128 | Plug | 21-137-47 |
| 129 | Spring | 21-137-53 |
| 130 | Retainer | 21-137-56 |
| 131 | Snap Ring | 21-137-59 |
| 132 | Guide | 21-137-13 |
| 133 | Ring | 21-137-8 |
| 134 | Seal | 21-117-10 |
| 135 | Strainer | 21-117-1 |
| 136 | Gasket | |
| 137 | Plug | |
| 138 | Washer | |
| 139 | Bolt | 21-119-3 |
| 140 | Pan | 21-119-3 |
| 141 | Gasket | 21-119-5 |
| 142 | Screw | |
| 143 | Seal | 21-117-10 |
| 144 | Body, w/Transfer Plate | 21-139-4 |
| 145 | Snap Ring | 21-137-19 |
| 146 | Spring | 21-137-205 |
| 147 | Ring, Large | 21-137-202 |
| 148 | Piston, Accumulator | 21-137-200 |
| 149 | Spring | 21-137-22 |
| 150 | Ring, Small | 21-137-202 |
| 151 | Rod, Kickdown Piston | 21-137-11 |
| 152 | Piston, Kickdown Servo | 21-137-5 |
| 153 | Rings | 21-137-8 |
| 154 | Nut | |
| 155 | Plugs | |
| 156 | Spring | 21-131-15 |
| 157 | Bolt and Washer | |
| 158 | Valve | 21-131-12 |
| 159 | Body, Regulator Valve | 21-131-5 |
| 160 | Rotor, Inner, Serviced in Package | 21-118-9 |
| 161 | Rotor, Outer | 21-118-7 |
| 162 | Seal | 21-118-45 |
| 163 | Housing, Front Oil Pump | 21-118-5 |
| 164 | Washer | |
| 165 | Bolt | |

PARTS INDICATED BY NAME ONLY - ORDER BY DESCRIPTION



MyMopar.com

| CODE | PART NAME AND DESCRIPTION | NO. OF CYL. | PLYMOUTH | DODGE | DESOTO | CHRYSLER AND IMPERIAL | PER CAR | PART NUMBER |
|---|---|---|---|---|---|---|---|---|

## NOTES



MyMopar.com

# GROUP 21 - TRANSMISSION

## STANDARD TRANSMISSION

| CODE | PART NAME AND DESCRIPTION | NO. OF CYL. | PLYMOUTH | DODGE | DESOTO | CHRYSLER AND IMPERIAL | PER CAR | PART NUMBER |
|---|---|---|---|---|---|---|---|---|
| **21-01-0** | **TRANSMISSION SETS OR PACKAGES** | | | | | | | |
| 21-01-3 | GASKET SET, PD3, PD4 | 6-8 | 60 (1) | 60 (1) | - | - | 1 | *2196 069 |
| | PP2 w/361 cu. in. Eng., PD1, PD2, w/383 cu. in. Eng., PD4 w/361 and 383 cu. in. Eng. | 8 | 60 | 60 | - | - | 1 | 2084 243 |
| | PD1, PD4 | 8 | 60 (2) | 60 (2) | - | - | 1 | *1752 479 |
| **21-02-0** | **TRANSMISSION ASSEMBLY** | | | | | | | |
| 21-02-1 | TRANSMISSION | 6 | 60 | 60 | - | - | 1 | 2124 376 |
| | PD1, PD4 | 8 | 60 (2) | 60 (2) | - | - | 1 | *1853 841 |
| | PP2, PD4, AFTER Eng. No. 261116 | 8 | 60 | 60 | - | - | 1 | ⊟2124 377 |
| | PP2 w/361 cu. in. Eng., PD1, PD2, w/383 cu. in. Eng., PD4 w/361 and 383 cu. in. Eng. | 8 | 60 | 60 | - | - | 1 | 2124 540 |
| 21-02-6 | VENT, PD3, PD4 | 6-8 | 60 (1) | 60 (1) | - | - | 1 | *2124 715 |
| | PP2 w/361 cu. in. Eng., PD1, PD2, w/383 cu. in. Eng., PD4 w/361 and 383 cu. in. Eng. | 8 | 60 | 60 | - | - | 1 | 1139 204 |
| **21-03-0** | **TRANSMISSION CASE** | | | | | | | |
| 21-03-1 | CASE, PD3, PD4 | 6-8 | 60 (1) | 60 (1) | - | - | 1 | *1949 910 |
| | PD1, PD4 | 8 | 60 (2) | 60 (2) | - | - | 1 | *1853 851 |
| | PP2 w/361 cu. in. Eng., PD1, PD2, w/383 cu. in. Eng., PD4 w/361 and 383 cu. in. Eng. | 8 | 60 | 60 | - | - | 1 | 2124 271 |
| 21-03-24 | PLUG, Back-Up Light Switch Hole | 6-8 | 60 | 60 | - | - | 1 | 1139 153 |
| 21-03-25 | GASKET | 6-8 | 60 | 60 | - | - | 1 | 1302 807 |
| **21-04-0** | **TRANSMISSION CASE EXTENSION** | | | | | | | |
| 21-04-1 | EXTENSION, PD3, PD4 | 6-8 | 60 (1) | 60 (1) | - | - | 1 | *2124 281 |
| | PD1, PD4 | 8 | 60 (2) | 60 (2) | - | - | 1 | *1735 718 |
| | PP2 w/361 cu. in. Eng., PD1, PD2, w/383 cu. in. Eng., PD4 w/361 and 383 cu. in. Eng. | 8 | 60 | 60 | - | - | 1 | 1949 969 |
| 21-04-2 | GASKET, PD3, PD4 | 6-8 | 60 (1) | 60 (1) | - | - | 1 | *1949 361 |
| | PD1, PD4 | 8 | 60 (2) | 60 (2) | - | - | 1 | *1635 273 |
| | PP2 w/361 cu. in. Eng., PD1, PD2, w/383 cu. in. Eng., PD4 w/361 and 383 cu. in. Eng. | 8 | 60 | 60 | - | - | 1 | 1921 480 |
| 21-04-11 | BUSHING, PD3, PD4 | 6-8 | 60 (1) | 60 (1) | - | - | 1 | *1941 887 |
| | BEARING | 8 | 60 (2) | 60 (2) | - | - | 1 | *1672 194 |
| 21-04-12 | SNAP RING, Bearing, .086" thk., PD1, PD4 | 8 | 60 (2) | 60 (2) | - | - | ★ | *1736 432 |
| | .091" thk., PD1, PD4 | 8 | 60 (2) | 60 (2) | - | - | ★ | *1736 433 |
| **21-09-0** | **TRANSMISSION MAIN DRIVE PINION** | | | | | | | |
| 21-09-2 | PINION, 24T., 20T., 10 Splines, 12 43/64" lgh., UP TO | 6 | 60 | 60 | - | - | 1 | *1949 362 |
| | 24T., 19T., 23 Splines, 12 43/64" lgh., AFTER | 6 | 60 | 60 | - | - | 1 | *2124 875 |
| | 24T., 22T., 12 1/2" lgh., PD1, PD4 | 8 | 60 (2) | 60 (2) | - | - | 1 | *1853 626 |
| | 24T., 22T., 23 Splines, 12 3/8" lgh., PD4 | 8 | 60 (1) | 60 (1) | - | - | 1 | ⊟2124 365 |
| | 36T., 19T., 13" lgh., PP2 w/361 cu.in. Eng., PD1, PD2, w/383 cu. in. Eng., PD4 w/361 and 383 cu. in. Eng. | 8 | 60 | 60 | - | - | 1 | 1949 968 |
| 21-09-5 | BEARING, PD1, PD3, PD4 | 6-8 | 60 | 60 | - | - | 1 | 1633 718 |
| | PP2 w/361 cu. in. Eng., PD1, PD2, w/383 cu. in. Eng., PD4 w/361 and 383 cu. in. Eng. | 8 | 60 | 60 | - | - | 1 | 927 630 |
| 21-09-19 | SLINGER, Bearing Oil, PD1, PD3, PD4 | 6-8 | 60 | 60 | - | - | 1 | 1633 669 |
| | PP2 w/361 cu. in. Eng., PD1, PD2, w/383 cu. in. Eng., PD4 w/361 and 383 cu. in. Eng. | 8 | 60 | 60 | - | - | 1 | 1921 471 |

NOTE 1: PP2, PD4, AFTER Engine No. 261116.
NOTE 2: PP2, PD4, UP TO Engine No. 261116.

★ Indicates use as required. Numerals in parentheses ( ) refer to notes. Printed in U.S.A.
⊟ Indicates parts not listed in any previous parts book. Prices and specifications subject to change without notice.
* Indicates change or addition.



Dec. 9, 1960 Supersedes April 20, 1960.

MyMopar.com

## STANDARD TRANSMISSION

### 21-09-0 TRANSMISSION MAIN DRIVE PINION - Cont'd

| CODE | PART NAME AND DESCRIPTION | NO. OF CYL. | PLYMOUTH | DODGE | DESOTO | CHRYSLER AND IMPERIAL | PER CAR | PART NUMBER |
|---|---|---|---|---|---|---|---|---|
| 21-09-23 | SNAP RING, Bearing, .088" thk., PD1, PD3, PD4 | 6-8 | 60 | 60 | - | - | ★ | 631 823 |
| | .091" thk., PD1, PD3, PD4 | 6-8 | 60 | 60 | - | - | ★ | 631 824 |
| | .094" thk., PD1, PD3, PD4 | 6-8 | 60 | 60 | - | - | ★ | 631 825 |
| | .097" thk., PD1, PD3, PD4 | 6-8 | 60 | 60 | - | - | ★ | 640 332 |
| | PP2 w/361 cu. in. Eng., PD1, PD2, w/383 cu. in. Eng., PD4 w/361 and 383 cu. in. Eng., Large | 8 | 60 | 60 | - | - | 1 | 1569 909 |
| | PP2 w/361 cu. in. Eng., PD1, PD2, w/383 Small | 8 | 60 | 60 | - | - | 1 | 1921 472 |
| | cu. in. Eng., PD4 w/361 and 383 cu. in. Eng., small | 8 | 60 | 60 | - | - | 1 | 1921 472 |
| 21-09-25 | WASHER, Bearing, PD1, PD3, PD4 | 6-8 | 60 | 60 | - | - | 1 | 631 877 |
| | PP2 w/361 cu. in. Eng., PD1, PD2, w/383 cu. in. Eng., PD4 w/361 and 383 cu. in. Eng. | 8 | 60 | 60 | - | - | 1 | 1921 473 |
| 21-09-29 | RETAINER, Bearing, PD3, PD4 | 6-8 | 60 (1) | 60 (1) | - | - | 1 | *1949 363 |
| | PD1, PD4 | 8 | 60 (2) | 60 (2) | - | - | 1 | *1632 041 |
| | PP2 w/361 cu. in. Eng., PD1, PD2, w/383 cu. in. Eng., PD4 w/361 and 383 cu. in. Eng. | 8 | 60 | 60 | - | - | 1 | 1949 957 |
| 21-09-30 | OIL SEAL, Retainer, PD3, PD4 | 6-8 | 60 (1) | 60 (1) | - | - | 1 | *1949 933 |
| 21-09-33 | GASKET, Bearing Retainer, .009" thk., PD1, PD3, PD4 | 6-8 | 60 | 60 | - | - | ★ | 865 180 |
| | .0135" thk., PD1, PD3, PD4 | 6-8 | 60 | 60 | - | - | ★ | * 865 181 |
| | PP2 w/361 cu. in. Eng., PD1, PD2, w/383 cu. in. Eng., PD4 w/361 and 383 cu. in. Eng. | 8 | 60 | 60 | - | - | 1 | 1921 475 |

### 21-10-0 TRANSMISSION GEARS

| | | | | | | | | |
|---|---|---|---|---|---|---|---|---|
| 21-10-4 | GEAR, Sliding, First and Reverse, 29T., 6 Splines, PD1, PD3, PD4 | 6-8 | 60 | 60 | - | - | 1 | 1853 855 |
| | First and Reverse, PP2 w/361 cu. in. Eng., PD1, PD2, w/383 cu. in. Eng., PD4 w/361 and 383 cu. in. Eng. | 8 | 60 | 60 | - | - | 1 | 1921 500 |
| 21-10-16 | GEAR, Second, 24T., 25T., PD1, PD3, PD4 | 6-8 | 60 | 60 | - | - | 1 | 1322 765 |
| | PP2 w/361 cu. in. Eng., PD1, PD2, w/383 cu. in. Eng., PD4 w/361 and 383 cu. in. Eng. | 8 | 60 | 60 | - | - | 1 | 1921 483 |

### 21-11-0 TRANSMISSION REVERSE IDLER GEAR

| | | | | | | | | |
|---|---|---|---|---|---|---|---|---|
| 21-11-1 | GEAR, 15T., PD1, PD3, PD4 | 6-8 | 60 | 60 | - | - | 1 | 1853 695 |
| | PP2 w/361 cu. in. Eng., PD1, PD2, w/383 cu. in. Eng., PD4 w/361 and 383 cu. in. Eng. | 8 | 60 | 60 | - | - | 1 | 1921 501 |
| 21-11-2 | ROLLER, Bearing, PD1, PD3, PD4 | 6-8 | 60 | 60 | - | - | 22 | 666 927 |
| | BUSHING, PP2 w/361 cu. in. Eng., PD1, PD2, w/383 cu. in. Eng., PD4 w/361 and 383 cu. in. Eng. | 8 | 60 | 60 | - | - | 1 | 1921 503 |
| 21-11-9 | WASHER, PD1, PD3, PD4 | 6-8 | 60 | 60 | - | - | 2 | 666 924 |

### 21-12-0 TRANSMISSION REVERSE IDLER GEAR SHAFT

| | | | | | | | | |
|---|---|---|---|---|---|---|---|---|
| 21-12-1 | SHAFT, PD1, PD3, PD4 | 6-8 | 60 | 60 | - | - | 1 | 1635 290 |
| | PP2 w/361 cu. in. Eng., PD1, PD2, w/383 cu. in. Eng., PD4 w/361 and 383 cu. in. Eng. | 8 | 60 | 60 | - | - | 1 | 1921 504 |
| 21-12-2 | KEY, PD1, PD3, PD4 | 6-8 | 60 | 60 | - | - | 1 | 1635 293 |

### 21-14-0 TRANSMISSION CLUTCH GEAR

| | | | | | | | | |
|---|---|---|---|---|---|---|---|---|
| 21-14-1 | SYNCHRONIZER UNIT, PD1, PD3, PD4 | 6-8 | 60 | 60 | - | - | 1 | 1853 909 |
| | PP2 w/361 cu. in. Eng., PD1, PD2, w/383 cu. in. Eng., PD4 w/361 and 383 cu. in. Eng. | 8 | 60 | 60 | - | - | 1 | 1921 487 |

NOTE 1: PP2, PD4, AFTER Engine No. 261116.
NOTE 2: PP2, PD4, UP TO Engine No. 261116.

★ Indicates use as required. Numerals in parentheses ( ) refer to notes. Printed in U.S.A.
⊟ Indicates parts not listed in any previous parts book. Prices and specifications subject to change without notice.
Dec. 9, 1960 Supersedes April 20, 1960. Page 21-8 * Indicates change or addition.

MyMopar.com

| CODE | PART NAME AND DESCRIPTION | NO. OF CYL. | PLYMOUTH | DODGE | DESOTO | CHRYSLER AND IMPERIAL | PER CAR | PART NUMBER |
|---|---|---|---|---|---|---|---|---|
| | **STANDARD TRANSMISSION** | | | | | | | |
| **21-14-0** | **TRANSMISSION CLUTCH GEAR - Cont'd** | | | | | | | |
| 21-14-5 | GEAR, 24T., PD1, PD3, PD4 | 6-8 | 60 | 60 | - | - | 1 | 1853 672 |
| | PP2 w/361 cu. in. Eng., PD1, PD2, w/383 cu. in. Eng., PD4 w/361 and 383 cu. in. Eng. | 8 | 60 | 60 | - | - | 1 | 1921 486 |
| 21-14-6 | SLEEVE, PD1, PD3, PD4 | 6-8 | 60 | 60 | - | - | 1 | 1676 197 |
| 21-14-15 | SPRING, Synchronizer Stop Ring, PD1, PD3, PD4 | 6-8 | 60 | 60 | - | - | 1 | 1823 916 |
| 21-14-19 | RING, Synchronizer Stop, Outer, PD1, PD3, PD4 | 6-8 | 60 | 60 | - | - | 2 | 1196 894 |
| | Inner, PD1, PD3, PD4 | 6-8 | 60 | 60 | - | - | 2 | 1322 763 |
| | Synchronizer Blocking, PP2 w/361 cu. in. Eng., PD1, PD2, w/383 cu. in. Eng., PD4 w/361 and 383 cu. in. Eng. | 8 | 60 | 60 | - | - | 2 | 1921 499 |
| 21-14-20 | SNAP RING, .088" thk., PD1, PD3, PD4 | 6-8 | 60 | 60 | - | - | ★ | 631 823 |
| | .091" thk., PD1, PD3, PD4. | 6-8 | 60 | 60 | - | - | ★ | 631 824 |
| | .094" thk., PD1, PD3, PD4 | 6-8 | 60 | 60 | - | - | ★ | 631 825 |
| | .097" thk., PD1, PD3, PD4 | 6-8 | 60 | 60 | - | - | ★ | 640 332 |
| | PP2 w/361 cu. in. Eng., PD1, PD2, w/383 cu. in. Eng., PD4 w/361 and 383 cu. in. Eng. | 8 | 60 | 60 | - | - | 1 | 1921 472 |
| **21-15-0** | **TRANSMISSION COUNTERSHAFT GEAR** | | | | | | | |
| 21-15-2 | GEAR, 31T., 23T., 18T., 14T., UP TO | 6 | 60 | 60 | - | - | 1 | 1633 761 |
| | 32T., 23T., 18T., 14T., AFTER | 6 | 60 | 60 | - | - | 1 | 1949 843 |
| | 29T., 23T., 18T., 14T., PD1, PD4 | 8 | 60 (2) | 60 (2) | - | - | 1 | *1853 627 |
| | 32T., 23T., 18T., 14T., PD4 | 8 | 60 (1) | 60 (1) | - | - | 1 | *1949 843 |
| | PP2 w/361 cu. in. Eng., PD1, PD2, w/383 cu. in. Eng., PD4 w/361 and 383 cu. in. Eng. | 8 | 60 | 60 | - | - | 1 | 1921 490 |
| 21-15-33 | WASHER, Thrust, .057" thk., PD1, PD3, PD4 | 6-8 | 60 | 60 | - | - | ★ | 1633 763 |
| | .062" thk., PD1, PD3, PD4. | 6-8 | 60 | 60 | - | - | ★ | 1633 762 |
| | Front, PP2 w/361 cu. in. Eng., PD1, PD2, w/383 cu. in. Eng., PD4 w/361 and 383 cu. in. Eng. | 8 | 60 | 60 | - | - | 1 | 1921 492 |
| | Rear, PP2 w/361 cu. in. Eng., PD1, PD2, w/383 cu. in. Eng., PD4 w/361 and 383 cu. in. Eng. | 8 | 60 | 60 | - | - | 1 | 1921 493 |
| **21-16-0** | **TRANSMISSION MAIN SHAFT** | | | | | | | |
| 21-16-3 | SHAFT, 23 Splines, 25 1/2" lgh., PD3, PD4 | 6-8 | 60 (1) | 60 (1) | - | - | 1 | *2124 283 |
| | 23 Splines, 25 9/64" lgh., PD1, PD4 | 8 | 60 (2) | 60 (2) | - | - | 1 | *1735 716 |
| | PP2 w/361 cu. in. Eng., PD1, PD2, w/383 cu. in. Eng., PD4 w/361 and 383 cu. in. Eng. | 8 | 60 | 60 | - | - | 1 | 1949 967 |
| 21-16-17 | SNAP RING, PP2 w/361 cu. in. Eng., PD1, PD2, w/383 cu. in. Eng., PD4 w/361 and 383 cu. in. Eng. | 8 | 60 | 60 | - | - | 1 | 1921 472 |
| **21-17-0** | **TRANSMISSION MAIN SHAFT PILOT BEARING** | | | | | | | |
| 21-17-2 | ROLLER, PD1, PD3, PD4 | 6-8 | 60 | 60 | - | - | 14 | 1949 834 |
| | PP2 w/361 cu. in. Eng., PD1, PD2, w/383 cu. in. Eng., PD4 w/361 and 383 cu. in. Eng. | 8 | 60 | 60 | - | - | 14 | 1921 482 |
| 21-17-7 | SNAP RING, Roller, PD1, PD3, PD4 | 6-8 | 60 | 60 | - | - | 1 | 601 108 |
| 21-17-9 | SPACER, Oil Retaining Washer, PP2 w/361 cu. in. Eng., PD1, PD2, w/383 cu. in. Eng., PD4 w/361 and 383 cu. in. Eng. | 8 | 60 | 60 | - | - | 1 | 1923 509 |
| **21-19-0** | **TRANSMISSION MAIN SHAFT BEARING** | | | | | | | |
| 21-19-2 | BEARING, PD3, PD4 | 6-8 | 60 (1) | 60 (1) | - | - | 1 | *1505 652 |
| | PD1, PD4 | 8 | 60 (2) | 60 (2) | - | - | 1 | *1633 663 |
| | PP2 w/361 cu. in. Eng., PD1, PD2, w/383 cu. in. Eng., PD4 w/361 and 383 cu. in. Eng. | 8 | 60 | 60 | - | - | 1 | 1672 194 |
| 21-19-15 | SNAP RING, Inner, .088" thk., PD3, PD4 | 6-8 | 60 (1) | 60 (1) | - | - | ★ | * 631 823 |
| | Inner, .091" thk., PD3, PD4 | 6-8 | 60 (1) | 60 (1) | - | - | ★ | * 631 824 |
| | Inner, .095" thk., PD3, PD4 | 6-8 | 60 (1) | 60 (1) | - | - | ★ | * 631 825 |

NOTE 1: PP2, PD4, AFTER Engine No. 261116.
NOTE 2: PP2, PD4, UP TO Engine No. 261116.


MyMopar.com

## STANDARD TRANSMISSION

### 21-19-0 TRANSMISSION MAIN SHAFT BEARING - Cont'd

| CODE | PART NAME AND DESCRIPTION | NO. OF CYL. | PLYMOUTH | DODGE | DESOTO | CHRYSLER AND IMPERIAL | PER CAR | PART NUMBER |
|---|---|---|---|---|---|---|---|---|
| 21-19-15 | SNAP RING - Cont'd | | | | | | | |
| | Inner, .097" thk., PD3, PD4 | 6-8 | 60 (1) | 60 (1) | - | - | ★ | * 640 332 |
| | Outer, .086" thk., PD3, PD4 | 6-8 | 60 (1) | 60 (1) | - | - | ★ | * 640 280 |
| | Outer, .089" thk., PD3, PD4 | 6-8 | 60 (1) | 60 (1) | - | - | ★ | * 631 809 |
| | Outer, .092" thk., PD3, PD4 | 6-8 | 60 (1) | 60 (1) | - | - | ★ | * 631 810 |
| | Outer, .095" thk., PD3, PD4 | 6-8 | 60 (1) | 60 (1) | - | - | ★ | * 640 331 |
| | PP2 w/361 cu. in. Eng., PD1, PD2, w/383 cu. in. Eng., PD4 w/361 and 383 cu. in. Eng. | 8 | 60 | 60 | - | - | 2 | 1921 481 |

### 21-22-0 TRANSMISSION MAIN SHAFT BEARING OIL SEAL

| | | | | | | | | |
|---|---|---|---|---|---|---|---|---|
| 21-22-2 | OIL SEAL, PD3, PD4 | 6-8 | 60 (1) | 60 (1) | - | - | 1 | *1854 449 |
| | PD1, PD4 | 8 | 60 (2) | 60 (2) | - | - | 1 | * 670 752 |
| | PP2 w/361 cu. in. Eng., PD1, PD2, w/383 cu. in. Eng., PD4 w/361 and 383 cu. in. Eng. | 8 | 60 | 60 | - | - | 1 | 1671 763 |

### 21-24-0 TRANSMISSION COUNTERSHAFT

| | | | | | | | | |
|---|---|---|---|---|---|---|---|---|
| 21-24-2 | COUNTERSHAFT, PD1, PD3, PD4 | 6-8 | 60 | 60 | - | - | 1 | 1635 282 |
| | PP2 w/361 cu. in. Eng., PD1, PD2, w/383 cu. in. Eng., PD4 w/361 and 383 cu. in. Eng. | 8 | 60 | 60 | - | - | 1 | 1921 491 |
| 21-24-19 | WASHER, Thrust Rear, PP2 w/361 cu. in. Eng., PD1, PD2, w/383 cu. in. Eng., PD4 w/361 and 383 cu. in. Eng. | 8 | 60 | 60 | - | - | 1 | 1921 494 |
| 21-24-22 | KEY, PD1, PD3, PD4 | 6-8 | 60 | 60 | - | - | 1 | 1635 293 |

### 21-25-0 TRANSMISSION COUNTERSHAFT BEARING

| | | | | | | | | |
|---|---|---|---|---|---|---|---|---|
| 21-25-2 | ROLLER, PD1, PD3, PD4 | 6-8 | 60 | 60 | - | - | 44 | 666 927 |
| | PP2 w/361 cu. in. Eng., PD1, PD2, w/383 cu. in. Eng., PD4 w/361 and 383 cu. in. Eng. | 8 | 60 | 60 | - | - | 80 | 1921 495 |
| 21-25-4 | SPACER, PD1, PD3, PD4 | 6-8 | 60 | 60 | - | - | 1 | 697 812 |
| | PP2 w/361 cu. in. Eng., PD1, PD2, w/383 cu. in. Eng., PD4 w/361 and 383 cu. in. Eng. | 8 | 60 | 60 | - | - | 1 | 1921 496 |
| 21-25-6 | WASHER or RING, Roller Thrust, PD1, PD3, PD4 | 6-8 | 60 | 60 | - | - | 2 | 1630 878 |
| | PP2 w/361 cu. in. Eng., PD1, PD2, w/383 cu. in. Eng., PD4 w/361 and 383 cu. in. Eng. | 8 | 60 | 60 | - | - | 4 | 1921 497 |

### 21-29-0 TRANSMISSION CASE COVER OR HOUSING

| | | | | | | | | |
|---|---|---|---|---|---|---|---|---|
| 21-29-3 | COVER, PD3, PD4 | 6-8 | 60 (1) | 60 (1) | - | - | 1 | *1949 345 |
| | HOUSING, PD1, PD4 | 8 | 60 (2) | 60 (2) | - | - | 1 | *1853 739 |
| | HOUSING, PP2 w/361 cu. in. Eng., PD1, PD2, w/383 cu. in. Eng., PD4 w/361 and and 383 cu. in. Eng. | 8 | 60 | 60 | - | - | 1 | 1921 506 |
| 21-29-25 | GASKET, PD3, PD4 | 6-8 | 60 (1) | 60 (1) | - | - | 1 | *1949 346 |
| | PD1, PD4 | 8 | 60 (2) | 60 (2) | - | - | 1 | *1853 856 |
| | PP2 w/361 cu. in. Eng., PD1, PD2, w/383 cu. in. Eng., PD4 w/361 and 383 cu. in. Eng. | 8 | 60 | 60 | - | - | 1 | 1921 507 |
| 21-29-36 | PLUG, Back-Up Light Switch Hole, PD1, PD4 | 8 | 60 (2) | 60 (2) | - | - | 1 | *1139 153 |
| 21-29-37 | GASKET, Plug, PD1, PD4 | 8 | 60 (2) | 60 (2) | - | - | 1 | *1302 807 |

### 21-30-0 TRANSMISSION GEARSHIFT LEVER

| | | | | | | | | |
|---|---|---|---|---|---|---|---|---|
| 21-30-2 | LEVER | 6-8 | 60 | 60 | - | - | 1 | 2123 130 |
| 21-30-6 | KNOB | 6-8 | 60 | - | - | - | 1 | 2122 634 |
| | | 6-8 | - | 60 | - | - | 1 | 1327 279 |
| 21-30-22 | PIN or BOLT | 6-8 | 60 | 60 | - | - | 1 | 1946 589 |
| 21-30-107 | CUSHION | 6-8 | 60 | 60 | - | - | 1 | 2122 993 |
| | GROMMET | 6-8 | 60 | 60 | - | - | 1 | 2122 992 |

NOTE 1: PP2, PD4, AFTER Engine No. 261116.
NOTE 2: PP2, PD4, UP TO Engine No. 261116.



MyMopar.com

## STANDARD TRANSMISSION

### 21-34-0 TRANSMISSION GEARSHIFT RAIL

| CODE | PART NAME AND DESCRIPTION | NO. OF CYL. | PLYMOUTH | DODGE | DESOTO | CHRYSLER AND IMPERIAL | PER CAR | PART NUMBER |
|---|---|---|---|---|---|---|---|---|
| 21-34-42 | PIN, Interlock, PD1, PD3, PD4 | 6-8 | 60 | 60 | - | - | 1 | 1949 356 |
| | PP2 w/361 cu. in. Eng., PD1, PD2, w/383 cu. in. Eng., PD4 w/361 and 383 cu. in. Eng. | 8 | 60 | 60 | - | - | 1 | 1921 522 |
| 21-34-45 | SLEEVE, Interlock, PD1, PD3, PD4 | 6-8 | 60 | 60 | - | - | 1 | 1949 355 |
| | Thin, PP2 w/361 cu. in. Eng., PD1, PD2, w/383 cu. in. Eng., PD4 w/361 and 383 cu. in. Eng. | 8 | 60 | 60 | - | - | ★ | 1921 518 |
| | Medium | 8 | 60 | 60 | - | - | ★ | 1921 519 |
| | Thick | 8 | 60 | 60 | - | - | ★ | 1921 520 |
| | Ext. Thick | 8 | 60 | 60 | - | - | ★ | 1921 521 |
| 21-34-47 | SPRING, Interlock Ball, PD1, PD3, PD4 | 6-8 | 60 | 60 | - | - | 1 | 1853 745 |
| | PP2 w/361 cu. in. Eng., PD1, PD2, w/383 cu. in. Eng., PD4 w/361 and 383 cu. in. Eng. | 8 | 60 | 60 | - | - | 1 | 1921 523 |

### 21-39-0 TRANSMISSION GEARSHIFT FORK

| | | | | | | | | |
|---|---|---|---|---|---|---|---|---|
| 21-39-3 | FORK, Low and Reverse, PD3, PD4 | 6-8 | 60 (1) | 60 (1) | - | - | 1 | *1949 351 |
| | Second and Direct | 6 | 60 | 60 | - | - | 1 | 1949 354 |
| | Second and Direct, PD4 | 8 | 60 (1) | 60 (1) | - | - | 1 | ⊟2125 059 |
| | Low and Reverse, PD1, PD4 | 8 | 60 (2) | 60 (2) | - | - | 1 | *1632 044 |
| | Second and Direct, PD1, PD4 | 8 | 60 (2) | 60 (2) | - | - | 1 | *1676 198 |
| | Low and Reverse, PP2 w/361 cu. in. Eng., PD1, PD2, w/383 cu. in. Eng., PD4 w/361 and 383 cu. in. Eng. | 8 | 60 | 60 | - | - | 1 | 1921 517 |
| | Second and Direct | 8 | 60 | 60 | - | - | 1 | 1921 516 |

### 21-42-0 TRANSMISSION REMOTE CONTROL GEARSHIFT

| | | | | | | | | |
|---|---|---|---|---|---|---|---|---|
| 21-42-11 | LEVER, w/SHAFT, Low and Reverse, PD3, PD4 | 6-8 | 60 (1) | 60 (1) | - | - | 1 | *1949 347 |
| | Second and Direct, PD3, PD4 | 6-8 | 60 (1) | 60 (1) | - | - | 1 | *1949 352 |
| | Low and Reverse, PD1, PD4 | 8 | 60 (2) | 60 (2) | - | - | 1 | *1949 467 |
| | Second and Direct, PD1, PD4 | 8 | 60 (2) | 60 (2) | - | - | 1 | *1949 471 |
| | Low and Reverse, PP2 w/361 cu. in. Eng., PD1, PD2, w/383 cu. in. Eng., PD4 w/361 and 383 cu. in. Eng. | 8 | 60 | 60 | - | - | 1 | 1923 508 |
| | Second and Direct | 8 | 60 | 60 | - | - | 1 | 1921 508 |
| | PIN, PD3, PD4 | 6-8 | 60 (1) | 60 (1) | - | - | 2 | * 103 566 |
| | PIN, PD1, PD4 | 8 | 60 (2) | 60 (2) | - | - | 2 | * 271 448 |
| 21-42-16 | PIN, Lever Shaft | 6 | 60 | 60 | - | - | 2 | ⊟6022 161 |
| 21-42-23 | LEVER, Operating, Low and Reverse, LHD., PD3, PD4 | 6-8 | 60 (1) | 60 (1) | - | - | 1 | *2124 276 |
| | Second and Direct, LHD., PD3, PD4 | 6-8 | 60 (1) | 60 (1) | - | - | 1 | *2124 278 |
| | Low and Reverse, LHD., PD1, PD4 | 8 | 60 (2) | 60 (2) | - | - | 1 | *1941 698 |
| | Second and Direct, LHD., PD1, PD4 | 8 | 60 (2) | 60 (2) | - | - | 1 | *1949 159 |
| | Low and Reverse, PP2 w/361 cu. in. Eng., PD1, PD2, w/383 cu. in. Eng., PD4 w/361 and 383 cu. in. Eng. | 8 | 60 | 60 | - | - | 1 | 2124 260 |
| | Second and Direct | 8 | 60 | 60 | - | - | 1 | 2124 259 |
| 21-42-31 | SEAL, Lever Shaft, PD3, PD4 | 6-8 | 60 (1) | 60 (1) | - | - | 2 | *1949 350 |
| | PD1, PD4 | 8 | 60 (2) | 60 (2) | - | - | 2 | *1536 267 |
| | PP2 w/361 cu. in. Eng., PD1, PD2, w/383 cu. in. Eng., PD4 w/361 and 383 cu. in. Eng. | 8 | 60 | 60 | - | - | 2 | 1921 513 |
| 21-42-42 | BUSHING, Operating Lever Grommet | 6-8 | 60 | 60 | - | - | 2 | 1676 200 |
| 21-42-43 | GROMMET, Operating Lever | 6-8 | 60 | 60 | - | - | 2 | 1941 699 |

### 21-84-0 TRANSMISSION SPEEDOMETER CABLE INCLUDES SHAFT AND HOUSING

| | | | | | | | | |
|---|---|---|---|---|---|---|---|---|
| 21-84-1 | HOUSING, w/SHAFT, 69 1/2" lgh., PP1, PD3, PD4 AFTER Engine No. 261116 | 6-8 | 60 | 60 | - | - | 1 | *2097 629 |
| | 71 5/32" lgh., PP2, PD4 UP TO Engine No. 261116, PD1 | 8 | 60 | 60 | - | - | 1 | *2097 488 |
| | | 8 | 60 (1) | - | - | - | 1 | ⊟2209 156 |

NOTE 1: PP2, PD4 AFTER Engine No. 261116.
NOTE 2: PP2, PD4, UP TO Engine No. 261116.


MyMopar.com

## STANDARD TRANSMISSION

### 21-84-0 TRANSMISSION SPEEDOMETER CABLE INCLUDES SHAFT AND HOUSING - Cont'd

| CODE | PART NAME AND DESCRIPTION | NO. OF CYL. | PLYMOUTH | DODGE | DESOTO | CHRYSLER AND IMPERIAL | PER CAR | PART NUMBER |
|---|---|---|---|---|---|---|---|---|
| 21-84-1 | HOUSING - Cont'd | | | | | | | |
| | 71 5/32" lgh., w/ADAPTER and 4.1 or 4.56 ratio, Export | 6 | 60 | 60 | - | - | 1 | *2097 488 |
| 21-84-4 | SHAFT, Drive, 69 1/2" lgh. | 6 | 60 | - | - | - | 1 | *2097 630 |
| | 66 1/2" lgh., PD3, PD4 | 6-8 | - | 60 (1) | - | - | 1 | *2076 271 |
| | 68 5/32" lgh., PD1, PD4 | 8 | 60 (2) | 60 (2) | - | - | 1 | * 920 402 |
| | 69 1/2" lgh. | 8 | 60 (1) | - | - | - | 1 | *2097 630 |
| 21-84-7 | RETAINER, Cable, PD3, PD4 | 6-8 | 60 (1) | 60 (1) | - | - | 1 | *1942 167 |
| 21-84-28 | SEAL, Speedometer Cable Adapter, PD3, PD4 | 6-8 | 60 (1) | 60 (1) | - | - | 1 | *1942 259 |

### 21-85-0 TRANSMISSION SPEEDOMETER GEAR AND PINION

| | | | | | | | | |
|---|---|---|---|---|---|---|---|---|
| 21-85-4 | GEAR, PP2 w/361 cu. in. Eng., PD1, PD2, w/383 cu. in. Eng., PD4 w/361 and 383 cu. in. Eng., Heavy Duty Trans. | 8 | 60 | 60 | - | - | 1 | 1638 291 |
| 21-85-5 | PINION, 15T., Steel w/3.31 to 1 ratio and 7.50 and 8.00 x 14 Tires, PP2 w/361 cu. in. Eng., PD1, PD2, w/383 cu. in. Eng., PD4 w/361 and 383 cu. in. Eng., Heavy Duty Trans. | 8 | 60 | 60 | - | - | 1 | 2124 361 |
| | 16T., Plastic w/3.54 and 3.58 to 1 ratio and 7.50 and 8.00 x 14 Tires, PP2 w/361 cu. in. Eng., PD1, PD2, w/383 cu. in. Eng., PD4 w/361 and 383 cu. in. Eng., Heavy Duty Trans. | 8 | 60 | 60 | - | - | 1 | 1732 063 |

STD. TRANSMISSION, PP1, PP2, PD3, PD4, PLUG IN TYPE

| Tire Size | 3.31 to 1 Ratio Pinion Teeth | 3.54 to 1 Ratio 3.55 to 1 Ratio Pinion Teeth | 3.58 to 1 Ratio Pinion Teeth | 3.73 to 1 Ratio Pinion Teeth | 3.91 to 1 Ratio Pinion Teeth | 4.1 to 1 Ratio Pinion Teeth |
|---|---|---|---|---|---|---|
| 7.50 x 14 | 1949 401 17 | 1949 402 18 | 1949 403 19 | 1949 403 19 | 1949 404 20 | 1949 405 21 |
| 8.00 x 14 | 1949 401 17 | 1949 402 18 | 1949 403 19 | 1949 403 19 | 1949 404 20 | 1949 405 21 |
| 8.50 x 14 | 1949 401 17 | 1949 402 18 | 1949 403 19 | 1949 403 19 | 1949 404 20 | 1949 405 21 |
| 6.70 x 15 | 1949 401 17 | 1949 402 18 | 1949 403 19 | 1949 403 19 | 1949 404 20 | |

STD. TRANSMISSION, PP2, PD1, PD4, EXCEPT HEAVY DUTY TRANS., SCREW IN TYPE

| Tire Size | 3.31 to 1 Ratio Pinion Teeth | 3.54 to 1 Ratio 3.55 to 1 Ratio 3.58 to 1 Ratio Pinion Teeth | 3.73 to 1 Ratio Pinion Teeth | 3.9 to 1 Ratio Pinion Teeth | 4.1 to 1 Ratio Pinion Teeth | 4.3 to 1 Ratio Pinion Teeth |
|---|---|---|---|---|---|---|
| 7.50 x 14 | 1635 300 15 | 1635 301 16 | 1635 299 17 | 1635 299 17 | 1635 302 18 | 1635 303 19 |
| 8.00 x 14 | 1635 300 15 | 1635 301 16 | 1635 299 17 | 1635 299 17 | 1635 302 18 | 1635 303 19 |
| 8.50 x 14 | 1635 300 15 | 1635 301 16 | 1635 301 16 | 1635 299 17 | 1635 302 18 | 1635 303 19 |

| CODE | PART NAME AND DESCRIPTION | NO. OF CYL. | PLYMOUTH | DODGE | DESOTO | CHRYSLER AND IMPERIAL | PER CAR | PART NUMBER |
|---|---|---|---|---|---|---|---|---|
| 21-85-29 | SNAP RING, Drive Gear, PP2 w/361 cu. in. Eng., PD1, PD2, w/383 cu. in. Eng., PD4 w/361 and 383 cu. in. Eng., Heavy Duty Trans. | 8 | 60 | 60 | - | - | 2 | 631 823 |
| 21-85-56 | SEAL, Pinion, PD3, PD4 | 6-8 | 60 (1) | 60 (1) | - | - | 1 | *2124 328 |
| 21-85-59 | RETAINER, Pinion, PD1, PD4 | 8 | 60 (2) | 60 (2) | - | - | 1 | *1559 341 |
| 21-85-61 | CLIP, Pinion, PD3, PD4 | 6-8 | 60 (1) | 60 (1) | - | - | 1 | *1942 174 |
| 21-85-76 | SLEEVE, Pinion, PD1, PD4 | 8 | 60 (2) | 60 (2) | - | - | 1 | *1635 304 |
| | PP2 w/361 cu. in. Eng., PD1, PD2, w/383 cu. in. Eng., PD4 w/361 and 383 cu. in. Eng., Heavy Duty Trans. | 8 | 60 | 60 | - | - | 1 | 1559 342 |

NOTE 1: PP2, PD4, AFTER Engine No. 261116.
NOTE 2: PP2, PD4, UP TO Engine No. 261116.



MyMopar.com

## POWERFLITE TRANSMISSION

| CODE | PART NAME AND DESCRIPTION | NO. OF CYL. | PLYMOUTH | DODGE | DESOTO | CHRYSLER AND IMPERIAL | PER CAR | PART NUMBER |
|---|---|---|---|---|---|---|---|---|
| **21-01-0** | **TRANSMISSION SETS OR PACKAGES** | | | | | | | |
| 21-01-3 | GASKET and SEAL PACKAGE, Partial, PD1, PD4, PS1 | 8 | 60 | 60 | 60 | - | 1 | 2084 616 |
| | Complete, PD1, PD4, PS1 | 8 | 60 | 60 | 60 | - | 1 | 2084 617 |
| | Complete Overhaul, PD1, PD4, PS1 | 8 | 60 | 60 | 60 | - | 1 | ⊟2240 194 |
| **21-02-0** | **TRANSMISSION ASSEMBLY** | | | | | | | |
| 21-02-1 | TRANSMISSION, PD4 | 8 | 60 | 60 | - | - | 1 | 1949 388 |
| | PD1, PS1 | 8 | - | 60 | 60 | - | 1 | 1949 389 |
| 21-02-6 | BREATHER, PD1, PD4, PS1 | 8 | 60 | 60 | 60 | - | 1 | 1139 204 |
| **21-03-0** | **TRANSMISSION CASE** | | | | | | | |
| 21-03-1 | CASE, PD1, PD4, PS1 | 8 | 60 | 60 | 60 | - | 1 | 1824 493 |
| 21-03-45 | BALL, Case Seal, Large, PD1, PD4, PS1 | 8 | 60 | 60 | 60 | - | ★ | 1824 321 |
| **21-04-0** | **TRANSMISSION CASE EXTENSION** | | | | | | | |
| 21-04-1 | EXTENSION, PD1, PD4, PS1 | 8 | 60 | 60 | 60 | - | 1 | 1949 192 |
| 21-04-2 | GASKET, PD1, PD4, PS1 | 8 | 60 | 60 | 60 | - | 1 | 1408 254 |
| **21-05-0** | **TRANSMISSION OUTPUT SHAFT** | | | | | | | |
| 21-05-1 | SHAFT, w/BUSHING, 23, 28, Splines, 7T., 18 1/2" lgh., PD1, PD4, PS1 | 8 | 60 | 60 | 60 | - | 1 | 1673 194 |
| 21-05-2 | BEARING, Rear, PD1, PD4, PS1 | 8 | 60 | 60 | 60 | - | 1 | 1672 194 |
| 21-05-8 | SNAP RING, Rear Bearing, .086" thk., PD1, PD4, PS1 | 8 | 60 | 60 | 60 | - | ★ | 1736 432 |
| | .091" thk., PD1, PD4, PS1 | 8 | 60 | 60 | 60 | - | ★ | 1736 433 |
| 21-05-12 | OIL SEAL, Rear Bearing, PD1, PD4, PS1 | 8 | 60 | 60 | 60 | - | 1 | 1671 763 |
| 21-05-18 | RING, Seal, PD1, PD4, PS1 | 8 | 60 | 60 | 60 | - | 1 | 1736 376 |
| 21-05-22 | BUSHING, PD1, PD4, PS1 | 8 | 60 | 60 | 60 | - | 1 | 1559 106 |
| 21-05-25 | SUPPORT, PD1, PD4, PS1 | 8 | 60 | 60 | 60 | - | 1 | 1408 334 |
| 21-05-26 | GASKET, Support, PD1, PD4, PS1 | 8 | 60 | 60 | 60 | - | 1 | 1408 255 |
| **21-30-0** | **TRANSMISSION GEARSHIFT BUTTONS AND CABLE** | | | | | | | |
| 21-30-28 | SOCKET, Selector Bulb, w/CABLE, PD1, PD4. | 8 | 60 | 60 | - | - | 1 | 1885 977 |
| 21-30-320 | HOUSING, w/SLIDES, PD1, PD4, PS1 | 8 | 60 | 60 | 60 | - | 1 | 1946 342 |
| 21-30-325 | ACTUATOR, Back-Up Light Switch, PD1, PD4, PS1 | 8 | 60 | 60 | 60 | - | 1 | 1676 629 |
| 21-30-336 | BUTTON, w/COVER, Neutral | 8 | 60 | - | - | - | 1 | 1945 864 |
| | Drive | 8 | 60 | - | - | - | 1 | 1945 875 |
| | Low | 8 | 60 | - | - | - | 1 | ⊟1946 189 |
| | Reverse | 8 | 60 | - | - | - | 1 | 1945 861 |
| | Neutral, PD1, PD4, PS1 | 8 | - | 60 | 60 | - | 1 | 1946 197 |
| | Drive, PD1, PD4, PS1 | 8 | - | 60 | 60 | - | 1 | 1946 210 |
| | Low, PD1, PD4, PS1 | 8 | - | 60 | 60 | - | 1 | 1946 208 |
| | Reverse, PD1, PD4, PS1 | 8 | - | 60 | 60 | - | 1 | 1946 194 |
| 21-30-340 | BUMPER, Slide, PD1, PD4, PS1 | 8 | 60 | 60 | 60 | - | 4 | 1731 143 |
| 21-30-345 | SPRING, Slide, PD1, PD4, PS1 | 8 | 60 | 60 | 60 | - | 4 | 1639 970 |
| 21-30-365 | CABLE, Control, PD1, PD4, PS1 | 8 | 60 | 60 | 60 | - | 1 | 1945 856 |
| 21-30-370 | BRACKET, on Dash or Housing, PD1, PD4, PS1 | 8 | 60 | 60 | 60 | - | 1 | 1639 975 |
| | BRACKET, Cable, on Trans., PD4, California Built | 8 | 60 | 60 | 60 | - | 1 | 1638 686 |
| | PD1, PD4, except California Built | 8 | - | 60 | - | - | 1 | 1672 213 |
| | CLIP, Cable Adapter, on Trans., PD1, PD4, PS1 | 8 | 60 | 60 | 60 | - | 1 | 1638 685 |
| | CLIP, Cable Adapter, on Trans., PD1, PD4, except California Built | 8 | - | 60 | - | - | 1 | 1672 215 |

★ Indicates use as required. Numerals in parentheses ( ) refer to notes. Printed in U.S.A.
⊟ Indicates parts not listed in any previous parts book. Prices and specifications subject to change without notice.
* Indicates change or addition. Page 21-13 April 20, 1960 Supersedes Oct. 1, 1959.

MyMopar.com

## POWERFLITE TRANSMISSION

| CODE | PART NAME AND DESCRIPTION | NO. OF CYL. | PLYMOUTH | DODGE | DESOTO | CHRYSLER AND IMPERIAL | PER CAR | PART NUMBER |
|---|---|---|---|---|---|---|---|---|
| **21-30-0** | **TRANSMISSION GEARSHIFT BUTTONS AND CABLE - Cont'd** | | | | | | | |
| 21-30-371 | STUD, Bracket, PD1, PD4, except California Built | 8 | - | 60 | - | - | 2 | 1636 523 |
| 21-30-390 | SEAL, Cable, on Trans., PD1, PD4, PS1 | 8 | 60 | 60 | 60 | - | 1 | 1316 864 |
| 21-30-394 | SPRING, Adapter, on Trans., PD1, PD4, PS1. | 8 | 60 | 60 | 60 | - | 1 | 1673 184 |
| **21-84-0** | **TRANSMISSION SPEEDOMETER CABLE INCLUDES SHAFT AND HOUSING** | | | | | | | |
| 21-84-1 | HOUSING, w/SHAFT, 71 5/32" lgh., PD1, PD4, PS1 | 8 | 60 | 60 | 60 | - | 1 | *2097 488 |
| 21-84-4 | SHAFT, Drive, 71 5/32" lgh. | 8 | 60 | - | - | - | 1 | 1527 492 |
| | 65 1/32" lgh., PD1, PD4, PS1 | 8 | - | 60 | 60 | - | 1 | 1089 709 |
| **21-85-0** | **TRANSMISSION SPEEDOMETER PINION** | | | | | | | |
| 21-85-7 | TRANSMISSION SPEEDOMETER PINION PACKAGE | | | | | | | |

| Tire Size | 3.15 to 1 Ratio 3.18 to 1 Ratio Pinion Teeth | 3.31 to 1 Ratio 3.36 to 1 Ratio Pinion Teeth | 3.55 to 1 Ratio 3.54 to 1 Ratio Pinion Teeth | 3.58 to 1 Ratio 3.73 to 1 Ratio Pinion Teeth | 3.9 to 1 Ratio Pinion Teeth | 4.1 to 1 Ratio Pinion Teeth |
|---|---|---|---|---|---|---|
| 7.50 x 14 | ---- --- -- | 1752 244 17 | 1752 245 18 | 1752 246 19 | 1752 247 20 | 1752 247 20 |
| 8.00 x 14 | ---- --- -- | 1752 244 17 | 1752 245 18 | 1752 246 19 | 1752 247 20 | 1752 247 20 |
| 8.50 x 14 | 1752 243 16 | 1752 244 17 | 1752 245 18 | 1752 246 19 | 1752 247 20 | 1752 247 20 |

| CODE | PART NAME AND DESCRIPTION | NO. OF CYL. | PLYMOUTH | DODGE | DESOTO | CHRYSLER AND IMPERIAL | PER CAR | PART NUMBER |
|---|---|---|---|---|---|---|---|---|
| 21-85-9 | ADAPTER, PD4, w/4.1 Radio, Export | 8 | 60 | 60 | - | - | 1 | ⊟1819 874 |
| 21-85-59 | RETAINER, Pinion, PD1, PD4, PS1 | 8 | 60 | 60 | 60 | - | 1 | 1559 341 |
| 21-85-76 | SLEEVE, Pinion, PD1, PD4, PS1 | 8 | 60 | 60 | 60 | - | 1 | 1559 342 |
| **21-113-0** | **TRANSMISSION NEUTRAL STARTER SWITCH** | | | | | | | |
| 21-113-24 | SWITCH PACKAGE, w/WASHER and "O" RING, on Trans., PD1, PD4, PS1 | 8 | 60 | 60 | 60 | - | 1 | 1704 283 |
| 21-113-28 | "O" RING, Mounting, PD1, PD4, PS1 | 8 | 60 | 60 | 60 | - | 1 | 1316 849 |
| 21-113-29 | WASHER, Mounting, PD1, PD4, PS1 | 8 | 60 | 60 | 60 | - | 1 | 1704 482 |
| **21-117-0** | **TRANSMISSION OIL PUMP STRAINER** | | | | | | | |
| 21-117-1 | STRAINER, PD1, PD4, PS1 | 8 | 60 | 60 | 60 | - | 1 | 1619 366 |
| 21-117-10 | SEAL, Tube, PD1, PD4, PS1 | 8 | 60 | 60 | 60 | - | 2 | 1401 256 |
| 21-117-24 | WASHER, Support Screw Lock, PD1, PD4, PS1 | 8 | 60 | 60 | 60 | - | 2 | 1559 377 |
| **21-118-0** | **TRANSMISSION OIL PUMP** | | | | | | | |
| 21-118-6 | GEAR and PINION SET, Front Pump, used w/Housing Stamped A, PD1, PD4, PS1 | 8 | 60 | 60 | 60 | - | 1 | 1603 360 |
| | Used w/Housing Stamped B, PD1, PD4, PS1 | 8 | 60 | 60 | 60 | - | 1 | 1603 361 |
| | Used w/Housing Stamped C, PD1, PD4, PS1 | 8 | 60 | 60 | 60 | - | 1 | 1603 362 |
| | Used w/Housing Stamped D, PD1, PD4, PS1 | 8 | 60 | 60 | 60 | - | 1 | 1603 363 |
| 21-118-7 | GEAR, Rear Pump, PD1, PD4, PS1 | 8 | 60 | 60 | 60 | - | 1 | 1672 315 |
| 21-118-8 | PINION, Rear Pump, PD1, PD4, PS1 | 8 | 60 | 60 | 60 | - | 1 | 1327 576 |
| | Ball | 8 | 60 | 60 | 60 | - | 1 | 147 483 |
| 21-118-37 | SLEEVE PACKAGE, Front Pump, w/RING, PD1, PD4, PS1 | 8 | 60 | 60 | 60 | - | 1 | 1752 606 |

★ Indicates use as required. Numerals in parentheses ( ) refer to notes. Printed in U.S.A.
⊟ Indicates parts not listed in any previous parts book. Prices and specifications subject to change without notice.
April 20, 1960 Supersedes Oct. 1, 1959. Page 21-14 * Indicates change or addition.

MyMopar.com

| CODE | PART NAME AND DESCRIPTION | NO. OF CYL. | PLYMOUTH | DODGE | DESOTO | CHRYSLER AND IMPERIAL | PER CAR | PART NUMBER |
|---|---|---|---|---|---|---|---|---|
| | **POWERFLITE TRANSMISSION** | | | | | | | |
| | **21-118-0 TRANSMISSION OIL PUMP - Cont'd** | | | | | | | |
| 21-118-38 | RING, Front Pump Drive Sleeve Seal, PD1, PD4, PS1 | 8 | 60 | 60 | 60 | - | 1 | 1738 264 |
| 21-118-40 | HOUSING, Front Pump, Stamped w/Letter A, PD1, PD4, PS1 | 8 | 60 | 60 | 60 | - | 1 | 1630 726 |
| | Stamped w/Letter B, PD1, PD4, PS1 | 8 | 60 | 60 | 60 | - | 1 | 1630 727 |
| | Stamped w/Letter C, PD1, PD4, PS1 | 8 | 60 | 60 | 60 | - | 1 | 1630 728 |
| | Stamped w/Letter D, PD1, PD4, PS1 | 8 | 60 | 60 | 60 | - | 1 | 1630 729 |
| | Rear Pump, PD1, PD4, PS1 | 8 | 60 | 60 | 60 | - | 1 | 1823 666 |
| 21-118-42 | OIL SEAL, Front Pump Housing, 2 7/8" O.D., PD1, PD4, PS1 | 8 | 60 | 60 | 60 | - | 1 | *1738 263 |
| 21-118-45 | OIL SEAL, Front Pump Housing, 6 9/32" O.D., PD1, PD4, PS1 | 8 | 60 | 60 | 60 | - | 1 | 1408 245 |
| | **21-119-0 TRANSMISSION OIL PAN** | | | | | | | |
| 21-119-3 | PAN, PD1, PD4, PS1 | 8 | 60 | 60 | 60 | - | 1 | 1408 280 |
| | Screw | 8 | 60 | 60 | 60 | - | 18 | 180 075 |
| 21-119-5 | GASKET, PD1, PD4, PS1 | 8 | 60 | 60 | 60 | - | 1 | 1408 282 |
| 21-119-15 | TUBE, Filler, w/BRACKET, PD4 | 8 | 60 | 60 | - | - | 1 | 1941 730 |
| | PD1, PS1 | 8 | - | 60 | 60 | - | 1 | 1941 731 |
| 21-119-19 | INDICATOR, Oil Level, PD1, PD4, PS1 | 8 | 60 | 60 | 60 | - | 1 | 1949 383 |
| | **21-129-0 TRANSMISSION INPUT SHAFT AND TORQUE CONVERTER REACTION SHAFT** | | | | | | | |
| 21-129-5 | SHAFT, Input, PD1, PD4, PS1 | 8 | 60 | 60 | 60 | - | 1 | 1672 122 |
| 21-129-10 | SHAFT, Reaction, 27 splines, 9 37/64" lgh., PD1, PD4, PS1 | 8 | 60 | 60 | 60 | - | 1 | 1633 731 |
| 21-129-12 | SEAL, Reaction Shaft, PD1, PD4, PS1 | 8 | 60 | 60 | 60 | - | 1 | *1738 265 |
| 21-129-13 | RING, Reaction Shaft Seal, PD1, PD4, PS1 | 8 | 60 | 60 | 60 | - | 2 | 1537 149 |
| 21-129-16 | DOWEL, Reaction Shaft, PD1, PD4, PS1 | 8 | 60 | 60 | 60 | - | 1 | 1327 588 |
| 21-129-20 | SLEEVE, Reaction Shaft, PD1, PD4, PS1 | 8 | 60 | 60 | 60 | - | 1 | 1559 029 |
| 21-129-23 | BUSHING, Reaction Shaft, PD1, PD4, PS1 | 8 | 60 | 60 | 60 | - | 1 | 1559 026 |
| | **21-131-0 TRANSMISSION REGULATOR VALVE BODY AND VALVES** | | | | | | | |
| 21-131-1 | BODY PACKAGE, PD1, PD4, PS1 | 8 | 60 | 60 | 60 | - | 1 | 1643 243 |
| 21-131-6 | GASKET, Body, PD1, PD4, PS1 | 8 | 60 | 60 | 60 | - | 1 | 1672 066 |
| 21-131-10 | VALVE, Regulator, PD1, PD4, PS1 | 8 | 60 | 60 | 60 | - | 1 | 1327 673 |
| 21-131-15 | SPRING, Regulator Valve, PD1, PD4, PS1 | 8 | 60 | 60 | 60 | - | 1 | 1941 693 |
| 21-131-20 | SEAT, Regulator Valve Spring, PD1, PD4, PS1 | 8 | 60 | 60 | 60 | - | 1 | 1327 675 |
| 21-131-25 | RETAINER, Regulator Valve Spring, PD1, PD4, PS1 | 8 | 60 | 60 | 60 | - | 1 | 1408 373 |
| 21-131-27 | GASKET, Regulator Valve Spring Retainer, PD1, PD4, PS1 | 8 | 60 | 60 | 60 | - | 1 | 1117 819 |
| 21-131-35 | VALVE, Torque Converter Control, PD1, PD4, PS1 | 8 | 60 | 60 | 60 | - | 1 | 2124 247 |
| 21-131-40 | SPRING, Torque Converter Control Valve, PD1, PD4, PS1 | 8 | 60 | 60 | 60 | - | 1 | 1630 812 |
| 21-131-45 | RETAINER, Torque Converter Control Valve Spring, PD1, PD4, PS1 | 8 | 60 | 60 | 60 | - | 1 | 1941 779 |
| 21-131-50 | GASKET, Torque Converter Control Valve Spring Retainer, PD1, PD4, PS1 | 8 | 60 | 60 | 60 | - | 1 | 1408 375 |
| | **21-133-0 TRANSMISSION DIRECT CLUTCH** | | | | | | | |
| 21-133-5 | RETAINER, Piston, w/PISTON, DISC and GEAR, PD4 | 8 | 60 | 60 | - | - | 1 | 1854 111 |
| | PD1, PS1 | 8 | - | 60 | 60 | - | 1 | 1853 989 |
| 21-133-7 | RETAINER, w/BUSHING, PD1, PD4, PS1 | 8 | 60 | 60 | 60 | - | 1 | 1854 112 |



MyMopar.com

## POWERFLITE TRANSMISSMION

| CODE | PART NAME AND DESCRIPTION | NO. OF CYL. | PLYMOUTH | DODGE | DESOTO | CHRYSLER AND IMPERIAL | PER CAR | PART NUMBER |
|---|---|---|---|---|---|---|---|---|
| **21-133-0** | **TRANSMISSION DIRECT CLUTCH - Cont'd** | | | | | | | |
| 21-133-12 | RING, Piston Retainer Seal, PD1, PD4, PS1 . | 8 | 60 | 60 | 60 | - | 1 | 1738 262 |
| 21-133-15 | PISTON, Clutch, PD4 . . . . . | 8 | 60 | 60 | - | - | 1 | 1633 768 |
| | PD1, PS1 . . . . . | 8 | - | 60 | 60 | - | 1 | 1633 728 |
| 21-133-17 | RING, Piston Seal, PD1, PD4, PS1 . . . . . | 8 | 60 | 60 | 60 | - | 1 | 1738 261 |
| 21-133-20 | SPRING, PD1, PD4, PS1 . . . . . | 8 | 60 | 60 | 60 | - | 1 | 1556 112 |
| 21-133-22 | RETAINER, Return Spring, PD1, PD4, PS1 . . | 8 | 60 | 60 | 60 | - | 1 | 1556 111 |
| 21-133-25 | SNAP RING, Spring Retainer, PD1, PD4, PS1. | 8 | 60 | 60 | 60 | - | 1 | 1327 749 |
| 21-133-30 | WASHER, Piston Retainer Thrust, .043" thk., Yellow, PD1, PD4, PS1 . . . . . | 8 | 60 | 60 | 60 | - | ★ | 1559 470 |
| | .060" thk., Green, PD1, PD4, PS1 . . . . . | 8 | 60 | 60 | 60 | - | ★ | 1559 471 |
| | .078" thk., Orange, PD1, PD4, PS1 . . . . . | 8 | 60 | 60 | 60 | - | ★ | 1559 472 |
| 21-133-35 | HUB, PD1, PD4, PS1 . . . . . | 8 | 60 | 60 | 60 | - | 1 | 1633 842 |
| 21-133-36 | DISC, Direct Clutch Driving, PD1, PD4, PS1 . | 8 | 60 | 60 | 60 | - | ★ | 1633 843 |
| 21-133-37 | PLATE and DISC PACKAGE, Direct Clutch Driving, PD1, PD4, PS1. . . . . | 8 | 60 | 60 | 60 | - | 1 | 1643 259 |
| 21-133-38 | PLATE, Direct Clutch Driving, PD1, PD4, PS1 . . . . . | 8 | 60 | 60 | 60 | - | ★ | 1408 232 |
| 21-133-40 | GEAR, Kickdown Sun, PD1, PD4, PS1 . . . . . | 8 | 60 | 60 | 60 | - | 1 | 1672 081 |
| 21-133-43 | SNAP RING, Kickdown Sun Gear, .059" thk., PD1, PD4, PS1. . . . . | 8 | 60 | 60 | 60 | - | ★ | 1327 729 |
| | .062" thk., PD1, PD4, PS1. . . . . | 8 | 60 | 60 | 60 | - | ★ | 1327 730 |
| **21-134-0** | **TRANSMISSION KICKDOWN PLANET PINION CARRIER AND COMPONENT PARTS** | | | | | | | |
| 21-134-5 | CARRIER, w/PINIONS, PD1, PD4, PS1 . . . . | 8 | 60 | 60 | 60 | - | 1 | 1853 934 |
| 21-134-30 | WASHER, Carrier Front Thrust, 3 1/2" dia., 3 tabs, PD1, PD4, PS1 . . . . . | 8 | 60 | 60 | 60 | - | 1 | 1638 462 |
| 21-134-33 | SNAP RING, .062" thk., PD1, PD4, PS1 . . . | 8 | 60 | 60 | 60 | - | ★ | 1327 730 |
| | .072" thk., PD1, PD4, PS1. . . . . | 8 | 60 | 60 | 60 | - | ★ | 1559 275 |
| | .082" thk., PD1, PD4, PS1. . . . . | 8 | 60 | 60 | 60 | - | ★ | 1559 332 |
| 21-134-38 | GEAR, Annulus, PD1, PD4, PS1 . . . . . | 8 | 60 | 60 | 60 | - | 1 | 1638 544 |
| 21-134-40 | SNAP RING, Annulus Gear, PD1, PD4, PS1. . | 8 | 60 | 60 | 60 | - | 1 | 1672 126 |
| **21-135-0** | **TRANSMISSION REVERSE PLANET PINION CARRIER AND COMPONENT PARTS** | | | | | | | |
| 21-135-5 | CARRIER, w/PINIONS, PD1, PD4, PS1 . . . . | 8 | 60 | 60 | 60 | - | 1 | 1672 135 |
| 21-135-25 | GEAR, Annulus, PD1, PD4, PS1 . . . . . | 8 | 60 | 60 | 60 | - | 1 | 1559 440 |
| 21-135-28 | SNAP RING, Annulus Gear, .078" thk., PD1, PD4, PS1 . . . . . | 8 | 60 | 60 | 60 | - | ★ | 1329 608 |
| | .082" thk., PD1, PD4, PS1. . . . . | 8 | 60 | 60 | 60 | - | ★ | 1329 609 |
| | .086" thk., PD1, PD4, PS1. . . . . | 8 | 60 | 60 | 60 | - | ★ | 1329 610 |
| 21-135-33 | HOUSING, PD1, PD4, PS1 . . . . . | 8 | 60 | 60 | 60 | - | 1 | 1559 331 |
| 21-135-35 | WASHER, Housing Thrust, PD1, PD4, PS1 . . | 8 | 60 | 60 | 60 | - | 1 | 1672 083 |
| **21-136-0** | **TRANSMISSION BANDS** | | | | | | | |
| 21-136-5 | BAND, Kickdown, PD1, PD4, PS1 . . . . . | 8 | 60 | 60 | 60 | - | 1 | 1854 128 |
| 21-136-15 | STRUT, Kickdown Band, PD1, PD4, PS1 . . . | 8 | 60 | 60 | 60 | - | 1 | 1630 896 |
| | ANCHOR, PD1, PD4, PS1. . . . . | 8 | 60 | 60 | 60 | - | 1 | 1736 427 |
| 21-136-17 | SCREW, Kickdown Band Adjustment, PD1, PD4, PS1 . . . . . | 8 | 60 | 60 | 60 | - | 1 | 1736 215 |
| 21-136-20 | LEVER, Kickdown Band, PD1, PD4, PS1 . . . | 8 | 60 | 60 | 60 | - | 1 | 1633 745 |
| 21-136-23 | SHAFT, Kickdown Band Lever, PD1, PD4, PS1 | 8 | 60 | 60 | 60 | - | 1 | 1402 685 |
| 21-136-30 | BAND, Reverse, PD1, PD4, PS1 . . . . . | 8 | 60 | 60 | 60 | - | 1 | 1854 170 |
| 21-136-41 | STRUT, Reverse Band, PD1, PD4, PS1 . . . . | 8 | 60 | 60 | 60 | - | 1 | 1854 172 |
| 21-136-44 | LINK, Reverse Band, PD1, PD4, PS1 . . . . . | 8 | 60 | 60 | 60 | - | 1 | 1854 171 |
| 21-136-47 | LEVER, Reverse Band, PD1, PD4, PS1 . . . . | 8 | 60 | 60 | 60 | - | 1 | 1559 480 |
| 21-136-49 | SHAFT, Reverse Band Lever, PD1, PD4, PS1. | 8 | 60 | 60 | 60 | - | 1 | 1402 685 |
| 21-136-52 | SCREW, Reverse Band Lever Adjusting, PD1, PD4, PS1 . . . . . | 8 | 60 | 60 | 60 | - | 1 | 1406 531 |

★ Indicates use as required. Numerals in parentheses ( ) refer to notes. Printed in U.S.A.
⊟ Indicates parts not listed in any previous parts book. Prices and specifications subject to change without notice.



MyMopar.com

## POWERFLITE TRANSMISSION

| CODE | PART NAME AND DESCRIPTION | NO. OF CYL. | PLYMOUTH | DODGE | DESOTO | CHRYSLER AND IMPERIAL | PER CAR | PART NUMBER |
|---|---|---|---|---|---|---|---|---|
| **21-137-0** | **TRANSMISSION SERVOS** | | | | | | | |
| 21-137-5 | PISTON, Kickdown, PD1, PD4, PS1 | 8 | 60 | 60 | 60 | - | 1 | 1633 747 |
| 21-137-8 | RING, Kickdown Piston, Small, PD1, PD4, PS1 | 8 | 60 | 60 | 60 | - | 1 | 1402 695 |
| | Intermediate, PD1, PD4, PS1 | 8 | 60 | 60 | 60 | - | 1 | 1322 445 |
| | Large, PD1, PD4, PS1 | 8 | 60 | 60 | 60 | - | 1 | 1329 693 |
| 21-137-11 | ROD, Kickdown Piston, PD1, PD4, PS1 | 8 | 60 | 60 | 60 | - | 1 | 1530 834 |
| 21-137-13 | GUIDE, Kickdown Piston Rod, PD1, PD4, PS1 | 8 | 60 | 60 | 60 | - | 1 | 1633 750 |
| 21-137-16 | RING, Kickdown Piston Rod Guide Seal, PD1, PD4, PS1 | 8 | 60 | 60 | 60 | - | 1 | 1329 693 |
| 21-137-19 | SNAP RING, Kickdown Piston Rod Guide, PD1, PD4, PS1 | 8 | 60 | 60 | 60 | - | 1 | 1329 648 |
| 21-137-20 | SPRING, Kickdown Piston Cushion, PD1, PD4, PS1 | 8 | 60 | 60 | 60 | - | 1 | 1638 562 |
| 21-137-22 | SPRING, Kickdown Piston, PD1, PD4, PS1 | 8 | 60 | 60 | 60 | - | 1 | 1633 748 |
| 21-137-35 | PISTON, Reverse Servo, PD1, PD4, PS1 | 8 | 60 | 60 | 60 | - | 1 | 1732 099 |
| 21-137-41 | SPRING, Reverse Servo Cushion, PD1, PD4, PS1 | 8 | 60 | 60 | 60 | - | 1 | 1732 102 |
| 21-137-44 | SNAP RING, Reverse Servo Piston Plug, PD1, PD4, PS1 | 8 | 60 | 60 | 60 | - | 1 | 1732 101 |
| 21-137-47 | PLUG, Reverse Servo Piston, PD1, PD4, PS1 | 8 | 60 | 60 | 60 | - | 1 | 1732 100 |
| 21-137-50 | RING, Reverse Servo Piston, PD1, PD4, PS1 | 8 | 60 | 60 | 60 | - | 1 | 1329 638 |
| 21-137-53 | SPRING, Reverse Servo Piston, PD1, PD4, PS1 | 8 | 60 | 60 | 60 | - | 1 | 1824 316 |
| 21-137-56 | RETAINER, Reverse Servo Piston Spring, PD1, PD4, PS1 | 8 | 60 | 60 | 60 | - | 1 | 1824 317 |
| 21-137-59 | SNAP RING, Reverse Servo Piston Spring Retainer, PD1, PD4, PS1 | 8 | 60 | 60 | 60 | 60 | 1 | 1329 642 |
| **21-138-0** | **TRANSMISSION GOVERNOR** | | | | | | | |
| 21-138-2 | REPAIR PACKAGE, Governor, PD1, PD4, PS1 | 8 | 60 | 60 | 60 | - | 1 | 1653 463 |
| 21-138-6 | SCREW, Body, w/WASHER, PD1, PD4, PS1 | 8 | 60 | 60 | 60 | - | 4 | 1823 543 |
| 21-138-9 | SCREW, Locating, PD1, PD4, PS1 | 8 | 60 | 60 | 60 | - | 1 | 1736 468 |
| 21-138-13 | WEIGHT, Outer, PD1, PD4, PS1 | 8 | 60 | 60 | 60 | - | 1 | 1559 494 |
| | Inner, PD1, PD4, PS1 | 8 | 60 | 60 | 60 | - | 1 | 1559 497 |
| | Intermediate | 8 | 60 | 60 | 60 | - | 1 | 1559 496 |
| 21-138-15 | SPRING, Weight, PD1, PD4, PS1 | 8 | 60 | 60 | 60 | - | 1 | 1559 498 |
| 21-138-19 | SNAP RING, Weight, PD1, PD4, PS1 | 8 | 60 | 60 | 60 | - | 1 | 1329 702 |
| | Outer, PD1, PD4, PS1 | 8 | 60 | 60 | 60 | - | 1 | 1559 495 |
| 21-138-23 | VALVE, PD1, PD4, PS1 | 8 | 60 | 60 | 60 | - | 1 | 1315 155 |
| 21-138-26 | SHAFT, Valve, PD1, PD4, PS1 | 8 | 60 | 60 | 60 | - | 1 | 1556 082 |
| 21-138-29 | SNAP RING, Valve Shaft, PD1, PD4, PS1 | 8 | 60 | 60 | 60 | - | 2 | 1638 461 |
| 21-138-38 | RING, Support Piston, PD1, PD4, PS1 | 8 | 60 | 60 | 60 | - | 2 | *2124 255 |
| **21-139-0** | **TRANSMISSION VALVE BODY AND VALVES** | | | | | | | |
| 21-139-4 | BODY, Valve, w/Transfer PLATE, PD1, PD4, PS1 | 8 | 60 | 60 | 60 | - | 1 | 1731 833 |
| 21-139-5 | BODY, PD1, PD4, PS1 | 8 | 60 | 60 | 60 | - | 1 | 1638 689 |
| 21-139-9 | VALVE, Manual, PD1, PD4, PS1 | 8 | 60 | 60 | 60 | - | 1 | 1408 388 |
| 21-139-12 | LEVER, Manual Valve, PD1, PD4, PS1 | 8 | 60 | 60 | 60 | - | 1 | 1638 633 |
| 21-139-24 | SPRING, Manual Valve Lever Detent Plunger, PD1, PD4, PS1 | 8 | 60 | 60 | 60 | - | 1 | 1638 455 |
| | Ball | 8 | 60 | 60 | 60 | - | 1 | 114 861 |
| 21-139-28 | VALVE and SPRING PACKAGE, Throttle, PD1, PD4, PS1 | 8 | 60 | 60 | 60 | - | 1 | 1879 506 |
| 21-139-36 | CAM, Throttle Valve, PD1, PD4, PS1 | 8 | 60 | 60 | 60 | - | 1 | 1672 129 |
| 21-139-38 | SPRING, Throttle Valve Cam, PD1, PD4, PS1 | 8 | 60 | 60 | 60 | - | 1 | 1559 212 |

★ Indicates use as required. Numerals in parentheses ( ) refer to notes. Printed in U.S.A.
⊟ Indicates parts not listed in any previous parts book. Prices and specifications subject to change without notice.
* Indicates change or addition.



MyMopar.com

## POWERFLITE TRANSMISSION

### 21-139-0 TRANSMISSION VALE BODY AND VALVES - Cont'd

| CODE | PART NAME AND DESCRIPTION | NO. OF CYL. | PLYMOUTH | DODGE | DESOTO | CHRYSLER AND IMPERIAL | PER CAR | PART NUMBER |
|---|---|---|---|---|---|---|---|---|
| 21-139-41 | RING, Cam Shaft Sleeve, 37/64" I.D., PD1, PD4, PS1 | 8 | 60 | 60 | 60 | - | 1 | 1638 635 |
| | SEAL, Sleeve, 31/64" I.D., PD1, PD4, PS1 | 8 | 60 | 60 | 60 | - | 1 | 1672 358 |
| | RING, Cam, 21/64" I.D., PD1, PD4, PS1 | 8 | 60 | 60 | 60 | - | 1 | 1672 150 |
| 21-139-42 | FELT, Throttle Valve Cam Shaft, PD1, PD4, PS1 | 8 | 60 | 60 | 60 | - | 1 | 1322 496 |
| 21-139-45 | RETAINER, Throttle Valve Cam Shaft Felt, PD1, PD4, PS1 | 8 | 60 | 60 | 60 | - | 1 | 1322 497 |
| 21-139-50 | LEVER, Throttle Valve Operating, PD1, PD4, PS1 | 8 | 60 | 60 | 60 | - | 1 | 1732 058 |
| 21-139-81 | SPRING, Kickdown Valve, PD1, PD4, PS1 | 8 | 60 | 60 | 60 | - | 1 | 1408 384 |
| | Ball | 8 | 60 | 60 | 60 | - | 1 | 104 921 |
| 21-139-84 | ROD, Kickdown Valve, PD1, PD4, PS1 | 8 | 60 | 60 | 60 | - | 1 | 1559 483 |
| 21-139-91 | VALVE, Servo Pressure Bleed, PD1, PD4, PS1 | 8 | 60 | 60 | 60 | - | 1 | 1530 821 |
| 21-139-94 | VALVE PACKAGE, Shuttle, PD1, PD4, PS1 | 8 | 60 | 60 | 60 | - | 1 | 1643 118 |
| 21-139-105 | VALVE, Direct Clutch Shift, PD1, PD4, PS1 | 8 | 60 | 60 | 60 | - | 1 | 1408 392 |
| 21-139-108 | SPRING, Direct Clutch Shift Valve, PD1, PD4, PS1 | 8 | 60 | 60 | 60 | - | 1 | 1408 393 |
| 21-139-111 | PLUG, Direct Clutch Shift Valve, PD1, PD4, PS1 | 8 | 60 | 60 | 60 | - | 1 | 1402 740 |
| 21-139-135 | COVER, Direct Valve Body End, PD1, PD4, PS1 | 8 | 60 | 60 | 60 | - | 1 | 1530 820 |
| 21-139-136 | PLATE, Valve Body End Cover, PD1, PD4, PS1 | 8 | 60 | 60 | 60 | - | 1 | 1530 813 |
| 21-139-140 | PLATE, Valve Body, PD1, PD4, PS1 | 8 | 60 | 60 | 60 | - | 1 | 1408 395 |
| 21-139-143 | VALVE, Front and Rear Pump Check, PD1, PD4, PS1 | 8 | 60 | 60 | 60 | - | 2 | 1823 762 |
| 21-139-144 | SPRING, Front and Rear Pump, PD1, PD4, PS1 | 8 | 60 | 60 | 60 | - | 2 | 1315 130 |
| 21-139-147 | PLATE, Transfer, PD1, PD4, PS1 | 8 | 60 | 60 | 60 | - | 1 | 1530 822 |
| 21-139-149 | COVER, Transfer Plate, PD1, PD4, PS1 | 8 | 60 | 60 | 60 | - | 1 | 1559 108 |
| 21-139-151 | WASHER, Transfer Plate Screw Lock, PD1, PD4, PS1 | 8 | 60 | 60 | 60 | - | 5 | 1559 377 |
| 21-139-152 | VALVE, Servo Restrictor, PD1, PD4, PS1 | 8 | 60 | 60 | 60 | - | 1 | 1486 436 |
| 21-139-153 | PLUG, Servo Restrictor Valve Operating, PD1, PD4, PS1 | 8 | 60 | 60 | 60 | - | 1 | 1538 295 |
| 21-139-190 | VALVE, Reverse Blocker, PD1, PD4, PS1 | 8 | 60 | 60 | 60 | - | 1 | 1672 078 |
| 21-139-193 | SPRING, Reverse Blocker Valve, PD1, PD4, PS1 | 8 | 60 | 60 | 60 | - | 1 | 1672 323 |

### 21-142-0 TRANSMISSION CONTROL LEVERS

| | | | | | | | | |
|---|---|---|---|---|---|---|---|---|
| 21-142-12 | LEVER, Throttle Control, PD1, PD4, PS1 | 8 | 60 | 60 | 60 | - | 1 | 1859 866 |
| 21-142-20 | INSULATOR, Throttle Control Lever Sound, PD1, PD4, PS1 | 8 | 60 | 60 | 60 | - | 1 | 1859 767 |
| 21-142-21 | BUSHING, Throttle Control Lever, PD1, PD4, PS1 | 8 | 60 | 60 | 60 | - | 1 | 1859 768 |



MyMopar.com

## AUTOMATIC 3-SPEED TRANSMISSION

| CODE | PART NAME AND DESCRIPTION | NO. OF CYL. | PLYMOUTH | DODGE | DESOTO | CHRYSLER AND IMPERIAL | PER CAR | PART NUMBER |
|---|---|---|---|---|---|---|---|---|
| **21-01-0** | **TRANSMISSION SETS OR PACKAGES** | | | | | | | |
| 21-01-3 | SEAL and GASKET PACKAGE | 6 | 60 | 60 | - | - | 1 | 2196 063 |
| | | 8 | 60 | 60 | 60 | 60 | 1 | 1879 507 |
| | COMPLETE OVERHAUL PACKAGE | 8 | 60 | 60 | 60 | 60 | 1 | 2240 192 |
| **21-02-0** | **TRANSMISSION ASSEMBLY** | | | | | | | |
| 21-02-1 | TRANSMISSION, UP TO Engine No. P-22-1-18 | 6 | 60 | 60 | - | - | 1 | 2124 441 |
| | Heavy Duty, UP TO Engine No. P-22-1-18 | 6 | 60 | 60 | - | - | 1 | 2124 725 |
| | AFTER Engine No. P-22-1-18 | 6 | 60 | 60 | - | - | 1 | 2125 075 |
| | PD4 | 8 | 60 | 60 | - | - | 1 | 1949 902 |
| | High Performance | 8 | 60 | - | - | - | 1 | 1949 907 |
| | PD1, PD2 | 8 | - | 60 | 60 | 60 | 1 | 1949 904 |
| | w/Ram Manifold, PD1-D500, PD2-D500 PD4-D500, PC3-300 | 8 | 60 | 60 | 60 | 60 | 1 | 1949 808 |
| | Heavy Duty, PD4, w/Heavy Duty Seals and Accumulator Spring | 8 | 60 | 60 | - | - | 1 | 1949 905 |
| | Heavy Duty, PD1, PD4, PC1, PC2, PC3, w/Heavy Duty Seals and w/o Accumulator Spring | 8 | 60 | 60 | - | 60 | 1 | 1949 906 |
| 21-02-6 | BREATHER | 6-8 | 60 | 60 | 60 | 60 | 1 | 1139 204 |
| **21-03-0** | **TRANSMISSION CASE** | | | | | | | |
| 21-03-1 | CASE | 6 | 60 | 60 | - | - | 1 | 1942 457 |
| | | 8 | 60 | 60 | 60 | 60 | 1 | 1941 628 |
| 21-03-6 | COVER, Case | 6 | 60 | 60 | - | - | 1 | 1949 767 |
| 21-03-23 | SCREW, Bracket to Cylinder Block, w/WASHER | 6 | 60 | 60 | - | - | 2 | 2124 409 |
| | Cylinder Block to Trans. Case | 6 | 60 | 60 | - | - | ★ | 2124 411 |
| | Cylinder Block to Trans. Case | 6 | 60 | 60 | - | - | ★ | 2124 410 |
| 21-03-28 | BRACKET, Case to Cylinder Block | 6 | 60 | 60 | - | - | 1 | 1949 701 |
| **21-04-0** | **TRANSMISSION CASE EXTENSION** | | | | | | | |
| 21-04-1 | EXTENSION | 6 | 60 | 60 | - | - | 1 | 1942 527 |
| | | 8 | 60 | 60 | 60 | 60 | 1 | 1949 185 |
| 21-04-2 | GASKET, UP TO Trans. No. 116816 | 6 | 60 | 60 | - | - | 1 | *1949 556 |
| | AFTER Trans. No. 116816 | 6 | 60 | 60 | - | - | 1 | ⊟2125 239 |
| | | 8 | 60 | 60 | 60 | 60 | 1 | 1853 891 |
| 21-04-11 | BUSHING | 6 | 60 | 60 | - | - | 1 | 2124 607 |
| | | 8 | 60 | 60 | 60 | 60 | 1 | 1941 887 |
| **21-05-0** | **TRANSMISSION OUTPUT SHAFT** | | | | | | | |
| 21-05-1 | SHAFT, w/PLUG | 6 | 60 | 60 | - | - | 1 | 1942 542 |
| | w/HOUSING | 8 | 60 | 60 | 60 | 60 | 1 | 1949 186 |
| 21-05-12 | OIL SEAL, Output Shaft | 6 | 60 | 60 | - | - | 1 | 1942 401 |
| | | 8 | 60 | 60 | 60 | 60 | 1 | 1824 075 |
| 21-05-18 | RING, Seal, Small | 8 | 60 | 60 | 60 | 60 | 1 | 1736 376 |
| | Large | 8 | 60 | 60 | 60 | 60 | 1 | 1314 249 |
| 21-05-19 | SNAP RING, Output Shaft | 6 | 60 | 60 | - | - | 1 | 1942 426 |
| 21-05-25 | SUPPORT | 8 | 60 | 60 | 60 | 60 | 1 | 1853 769 |
| 21-05-26 | GASKET, Support | 8 | 60 | 60 | 60 | 60 | 1 | 1853 888 |
| 21-05-35 | WASHER, Output Shaft Thrust, .052" thk., Natural, Fiber | 6 | 60 | 60 | - | - | 1 | *1942 454 |
| | .068" thk., Red, Fiber | 6 | 60 | 60 | - | - | 1 | *1942 455 |
| | .083" thk., Black, Fiber | 6 | 60 | 60 | - | - | 1 | *1942 456 |
| | Support Thrust, w/4 TABS | 8 | 60 | 60 | 60 | 60 | 1 | 1824 403 |
| | Shaft Thrust, w/2 TABS | 8 | 60 | 60 | 60 | 60 | 1 | 1636 290 |

★ Indicates use as required. Numerals in parentheses ( ) refer to notes. Printed in U.S.A.
⊟ Indicates parts not listed in any previous parts book. Prices and specifications subject to change without notice.
* Indicates change or addition.



Dec. 9, 1960 Supersedes April 20, 1960.

MyMopar.com

## AUTOMATIC 3-SPEED TRANSMISSION

### 21-30-0 TRANSMISSION GEARSHIFT BUTTONS AND CABLE

| CODE | PART NAME AND DESCRIPTION | NO. OF CYL. | PLYMOUTH | DODGE | DESOTO | CHRYSLER AND IMPERIAL | PER CAR | PART NUMBER |
|---|---|---|---|---|---|---|---|---|
| 21-30-28 | SOCKET, Selector Bulb, w/CABLE | 8 | 60 | 60 | 60 | 60 | 1 | 1885 977 |
| 21-30-320 | HOUSING, w/SLIDES | 6-8 | 60 | 60 | 60 | 60 | 1 | 1946 547 |
| 21-30-325 | ACTUATOR, Back-Up Light Switch | 6-8 | 60 | 60 | 60 | 60 | 1 | 1676 629 |
| 21-30-336 | BUTTON, w/COVER Neutral | 6-8 | 60 | - | - | - | 1 | 1945 864 |
| | Drive | 6-8 | 60 | - | - | - | 1 | 1945 867 |
| | First | 6-8 | 60 | - | - | - | 1 | 1945 873 |
| | Second | 6-8 | 60 | - | - | - | 1 | 1945 870 |
| | Reverse | 6-8 | 60 | - | - | - | 1 | 1945 861 |
| | Neutral | 6-8 | - | 60 | 60 | - | 1 | 1946 197 |
| | Drive | 6-8 | - | 60 | 60 | - | 1 | 1946 200 |
| | First | 6-8 | - | 60 | 60 | - | 1 | 1946 206 |
| | Second | 6-8 | - | 60 | 60 | - | 1 | 1946 203 |
| | Reverse | 6-8 | - | 60 | 60 | - | 1 | 1946 194 |
| | Neutral, PC1, PC2, PC3 | 8 | - | - | - | 60 | 1 | 1946 505 |
| | Drive, PC1, PC2, PC3 | 8 | - | - | - | 60 | 1 | 1946 508 |
| | First, PC1, PC2, PC3 | 8 | - | - | - | 60 | 1 | 1946 514 |
| | Second, PC1, PC2, PC3 | 8 | - | - | - | 60 | 1 | 1946 511 |
| | Reverse, PC1, PC2, PC3 | 8 | - | - | - | 60 | 1 | 1946 502 |
| | Neutral, PY1 | 8 | - | - | - | 60 | 1 | 1948 781 |
| | Drive, PY1 | 8 | - | - | - | 60 | 1 | 1948 782 |
| | First, PY1 | 8 | - | - | - | 60 | 1 | 1948 784 |
| | Second, PY1 | 8 | - | - | - | 60 | 1 | 1948 783 |
| | Reverse, PY1 | 8 | - | - | - | 60 | 1 | 1948 780 |
| 21-30-340 | BUMPER, Slide | 6-8 | 60 | 60 | 60 | 60 | 4 | 1731 143 |
| 21-30-345 | SPRING, Slide | 6-8 | 60 | 60 | 60 | 60 | 5 | 1639 970 |
| 21-30-365 | CABLE, Control, PC1, PC2, PC3 | 6-8 | 60 | 60 | 60 | 60 | 1 | 1946 545 |
| | PY1 | 8 | - | - | - | 60 | 1 | 1856 491 |
| 21-30-367 | GROMMET, Cable Dash | 6-8 | 60 | 60 | 60 | 60 | 1 | 1370 460 |
| 21-30-370 | BRACKET, Cable, on Housing | 6-8 | 60 | 60 | 60 | 60 | 1 | *1673 921 |
| 21-30-375 | FLANGE or WHEEL, Control Cable Adjusting | 6-8 | 60 | 60 | 60 | 60 | 1 | 1856 492 |
| 21-30-390 | SEAL, Cable, on Trans. | 6-8 | 60 | 60 | 60 | 60 | 1 | 1316 813 |
| 21-30-392 | ADAPTER, Control Cable, w/PIN | 6-8 | 60 | 60 | 60 | 60 | 1 | 1941 636 |
| 21-30-394 | SPRING, Control Cable Adapter | 6-8 | 60 | 60 | 60 | 60 | 1 | 1673 184 |

### 21-84-0 TRANSMISSION SPEEDOMETER CABLE INCLUDES SHAFT AND HOUSING

| | | | | | | | | |
|---|---|---|---|---|---|---|---|---|
| 21-84-1 | HOUSING, w/SHAFT, 69 1/2" lgh. | 6 | 60 | 60 | - | - | 1 | 2097 629 |
| | 71 5/32" lgh. | 8 | 60 | 60 | 60 | 60 | 1 | *2097 488 |
| | 71 59/64 lgh., w/ADAPTER 4.1 and 4.56 to 28 5/32" lgh. w/Auto. Pilot | 8 | 60 | 60 | 60 | 60 | 1 | 2097 124 |
| | 1 ratio, Export | 6 | 60 | 60 | - | - | 1 | ⊟2097 488 |
| 21-84-4 | SHAFT, Drive, 69 1/2" lgh. | 6 | 60 | - | - | - | 1 | 2097 630 |
| | 66 1/2" lgh. | 6 | - | 60 | - | - | 1 | 2076 271 |
| | 71 5/32" lgh. | 8 | 60 | - | - | - | 1 | 1527 492 |
| | 65 1/32" lgh. | 8 | - | 60 | 60 | 60 | 1 | 1089 709 |
| | 28 5/32" lgh., w/Auto. Pilot, PC1, PC2, PC3 | 8 | 60 | 60 | 60 | 60 | 1 | *1887 657 |
| | 25 21/32" lgh., w/Auto. Pilot, PY1 | 8 | - | - | - | 60 | 1 | ⊟2198 243 |
| 21-84-7 | RETAINER, Cable | 6 | 60 | 60 | - | - | 1 | 1942 167 |
| 21-84-28 | SEAL, Cable Adapter | 6 | 60 | 60 | - | - | 1 | 1942 259 |

### 21-85-0 TRANSMISSION SPEEDOMETER PINION

21-85-5 PINION

6 CYLINDER CARS ONLY

| Tire Size | 3.31 to 1 Ratio Pinion Teeth | 3.54 to 1 Ratio 3.55 to 1 Ratio Pinion Teeth | 3.91 to 1 Ratio Pinion Teeth |
|---|---|---|---|
| 7.50 x 14 | 1942 517 17 | 1942 521 18 | 1942 523 20 |
| 8.00 x 14 | 1942 517 17 | 1942 521 18 | 1942 523 20 |
| 8.50 x 14 | 1942 517 17 | 1942 521 18 | 1942 523 20 |
| 6.70 x 15 | 1942 517 17 | 1942 521 18 | 1942 523 20 |

★ Indicates use as required. Numerals in parentheses ( ) refer to notes. Printed in U.S.A.
⊟ Indicates parts not listed in any previous parts book. Prices and specifications subject to change without notice.



MyMopar.com

# AUTOMATIC 3-SPEED TRANSMISSION

## 21-85-0 TRANSMISSION SPEEDOMETER PINION - Cont'd

8 CYLINDER CARS ONLY

| Tire Size | 2.93 to 1 Ratio<br>Pinion Teeth | 3.15 to 1 Ratio<br>3.18 to 1 Ratio<br>Pinion Teeth | 3.23 to 1 Ratio<br>Pinion Teeth | 3.31 to 1 Ratio<br>Pinion Teeth | 3.54 to 1 Ratio<br>3.55 to 1 Ratio<br>Pinion Teeth | 3.58 to 1 Ratio<br>3.73 to 1 Ratio<br>Pinion Teeth |
|---|---|---|---|---|---|---|
| 7.50 x 14 | 1636 406 17 | 1636 408 19 | 1636 408 19 | 1636 409 20 | 1636 410 21 | 1636 410 21 |
| 8.00 x 14 | 1636 406 17 | 1636 408 19 | 1636 408 19 | 1636 409 20 | 1636 410 21 | 1636 410 21 |
| 8.50 x 14 | 1636 406 17 | 1636 407 18 | 1636 408 19 | 1636 408 19 | 1636 409 20 | 1636 410 21 |
| 9.00 x 14 | 1636 406 17 | 1636 407 18 | ---- --- -- | 1636 408 19 | 1636 409 20 | 1636 410 21 |
| 9.50 x 14 | 1732 113 16 | 1636 407 18 | ---- --- -- | 1636 408 19 | 1636 409 20 | ---- --- -- |
| 8.20 x 15 | 1732 113 16 | ---- --- -- | ---- --- -- | 1636 407 18 | ---- --- -- | ---- --- -- |
| 11.00 x 15 | 1636 408 18 | ---- --- -- | ---- --- -- | 1636 406 17 | ---- --- -- | ---- --- -- |

| CODE | PART NAME AND DESCRIPTION | NO. OF CYL. | PLYMOUTH | DODGE | DESOTO | CHRYSLER AND IMPERIAL | PER CAR | PART NUMBER |
|---|---|---|---|---|---|---|---|---|
| 21-85-9 | ADAPTER, w/4.56 to 1 ratio, Export | 6 | 60 | 60 | - | - | 1 | 2198 113 |
| 21-85-56 | SEAL, Pinion | 6 | 60 | 60 | - | - | 1 | 2124 328 |
| 21-85-59 | RETAINER, Pinion | 8 | 60 | 60 | 60 | 60 | 1 | 1559 341 |
| 21-85-61 | CLIP, Pinion | 6 | 60 | 60 | - | - | 1 | 1942 174 |
| 21-85-76 | SLEEVE, Pinion | 8 | 60 | 60 | 60 | 60 | 1 | 1633 676 |
| **21-113-0** | **TRANSMISSION NEUTRAL STARTER SWITCH** | | | | | | | |
| 21-113-24 | SWITCH PACKAGE, w/WASHER and "O" RING, on Trans. | 6-8 | 60 | 60 | 60 | 60 | 1 | 1704 283 |
| 21-113-28 | "O" RING, Mounting | 6-8 | 60 | 60 | 60 | 60 | 1 | 1316 849 |
| 21-113-29 | WASHER, Mounting | 6-8 | 60 | 60 | 60 | 60 | 1 | 1704 482 |
| **21-117-0** | **TRANSMISSION OIL PUMP STRAINER** | | | | | | | |
| 21-117-1 | STRAINER | 6 | 60 | 60 | - | - | 1 | 1949 964 |
| | | 8 | 60 | 60 | 60 | 60 | 1 | 1736 216 |
| 21-117-10 | SEAL, Tube | 8 | 60 | 60 | 60 | 60 | 2 | 1401 256 |
| **21-118-0** | **TRANSMISSION OIL PUMP** | | | | | | | |
| 21-118-1 | GASKET SET, Front Pump | 8 | 60 | 60 | 60 | 60 | 1 | 1843 230 |
| | Rear Pump | 8 | 60 | 60 | 60 | 60 | 1 | 1879 508 |
| 21-118-5 | HOUSING, Front Pump, w/ROTORS and SLEEVE | 8 | 60 | 60 | 60 | 60 | 1 | *2084 319 |
| 21-118-6 | ROTOR PACKAGE, Front Pump PP1, PD3 UP TO Engine No. P-22-1-18 | 6 | 60 | 60 | - | - | 1 | 2196 796 |
| | Front Pump, PP1, PD3, AFTER Engine No. P-22-1-18 | 6 | 60 | 60 | - | - | 1 | 2240 302 |
| | Rear Pump | 6 | 60 | 60 | - | - | 1 | 2196 795 |
| 21-118-7 | ROTOR, Rear Pump, Outer | 6 | 60 | 60 | - | - | 1 | 1672 296 |
| | Front Pump, Outer | 8 | 60 | 60 | 60 | 60 | 1 | 1736 163 |
| | Gear, Rear Pump, Outer | 8 | 60 | 60 | 60 | 60 | 1 | 1672 315 |
| 21-118-8 | ROTOR, Rear Pump, Inner | 8 | 60 | 60 | 60 | 60 | 1 | 1327 576 |
| | Front Pump, Inner | 8 | 60 | 60 | 60 | 60 | 1 | 1949 600 |
| 21-118-9 | ROTOR PACKAGE, Front Pump, w/SLEEVE, Inner | 8 | 60 | 60 | 60 | 60 | 1 | 2084 321 |
| 21-118-37 | SLEEVE, Front Pump | 8 | 60 | 60 | 60 | 60 | 1 | 1949 601 |
| 21-118-38 | RING, Front Pump Drive Sleeve, Steel | 8 | 60 | 60 | 60 | 60 | 1 | 1854 304 |
| | Rubber | 8 | 60 | 60 | 60 | 60 | 1 | 1738 264 |



MyMopar.com

## AUTOMATIC 3-SPEED TRANSMISSION

### 21-118-0 TRANSMISSION OIL PUMP - Cont'd

| CODE | PART NAME AND DESCRIPTION | NO. OF CYL. | PLYMOUTH | DODGE | DESOTO | CHRYSLER AND IMPERIAL | PER CAR | PART NUMBER |
|---|---|---|---|---|---|---|---|---|
| 21-118-40 | HOUSING, Front Pump, w/BUSHING | 6 | 60 | 60 | - | - | 1 | 1942 381 |
| | Rear Pump | 6 | 60 | 60 | - | - | 1 | 1942 463 |
| | Rear Pump | 8 | 60 | 60 | 60 | 60 | 1 | 1823 667 |
| 21-118-42 | OIL SEAL, Front Pump Housing, 2 1/4" O.D. | 6 | 60 | 60 | - | - | 1 | 1942 303 |
| | Heavy Duty | 6 | 60 | 60 | - | - | 1 | 2124 705 |
| | 2 7/8" O.D. | 8 | 60 | 60 | 60 | 60 | 1 | 1738 263 |
| 21-118-45 | OIL SEAL, Front Pump Housing, 8 17/64" O.D. | 6 | 60 | 60 | - | - | 1 | *1942 384 |
| | 6 31/64" O.D. | 8 | 60 | 60 | 60 | 60 | 1 | 1408 245 |
| 21-118-47 | BUSHING, Front Pump Housing | 6 | 60 | 60 | - | - | 1 | 1853 595 |
| 21-118-53 | COVER, Rear Pump Housing | 6 | 60 | 60 | - | - | 1 | 1942 107 |
| 21-118-55 | SCREW, Front Pump Housing, w/WASHER | 6 | 60 | 60 | - | - | 6 | 2124 600 |

### 21-119-0 TRANSMISSION OIL PAN

| | | | | | | | | |
|---|---|---|---|---|---|---|---|---|
| 21-119-3 | PAN, Oil | 6 | 60 | 60 | - | - | 1 | 1942 514 |
| | | 8 | 60 | 60 | 60 | 60 | 1 | 1636 286 |
| | SCREW | 6-8 | 60 | 60 | 60 | 60 | ★ | 180 075 |
| 21-119-5 | GASKET, Oil Pan | 6 | 60 | 60 | - | - | 1 | 1942 516 |
| | | 8 | 60 | 60 | 60 | 60 | 1 | 1636 448 |
| 21-119-11 | PLUG, Oil Pan Drain | 6 | 60 | 60 | - | - | 1 | 863 986 |
| 21-119-12 | GASKET, Drain Plug | 6 | 60 | 60 | - | - | 1 | 863 987 |
| 21-119-15 | TUBE, Oil Filler | 6 | 60 | 60 | - | - | 1 | 2124 339 |
| | PD4 | 8 | 60 | 60 | - | - | 1 | 1941 632 |
| | PP2 High Performance, PD1, PD2 | 8 | 60 | 60 | 60 | 60 | 1 | 1941 634 |
| | w/Ram Manifold | 8 | 60 | - | 60 | - | 1 | 1949 583 |
| | PD1-D500, PD2-D500, PD4-D500 | 8 | - | 60 | - | - | 1 | 1949 583 |
| | PC3-C300 | 8 | - | - | - | 60 | 1 | 1949 542 |
| 21-119-19 | INDICATOR, Oil Level | 6 | 60 | 60 | - | - | 1 | 2124 338 |
| | | 8 | 60 | 60 | 60 | 60 | 1 | 1949 383 |
| | w/Ram Manifold, PD1-D500, PD2-D500, PD4-D500, PC3-C300 | 8 | 60 | 60 | 60 | 60 | 1 | 1949 545 |
| 21-119-25 | SEAL, Oil Filler Tube | 6 | 60 | 60 | - | - | 1 | 1316 815 |

### 21-129-0 TRANSMISSION INPUT SHAFT, TORQUE CONVERTER REACTION SHAFT AND INTERMEDIATE SHAFT

| | | | | | | | | |
|---|---|---|---|---|---|---|---|---|
| 21-129-5 | SHAFT, Input, w/Rear Clutch Piston RETAINER, 18 T., 23 T., UP TO Trans. No. 184159 | 6 | 60 | 60 | - | - | 1 | *1942 383 |
| | AFTER Trans. No. 184159 | 6 | 60 | 60 | - | - | 1 | ⊟2125 201 |
| | w/BUSHING, 19 Spline, 9 29/32" lgh. | 8 | 60 | 60 | 60 | 60 | 1 | 1853 673 |
| 21-129-7 | RING, Input Shaft Seal | 6 | 60 | 60 | - | - | 2 | 1401 221 |
| | Small | 8 | 60 | 60 | 60 | 60 | 1 | 1941 831 |
| | Large | 8 | 60 | 60 | 60 | 60 | 1 | 1323 593 |
| | SNAP RING, Input Shaft | 6 | 60 | 60 | - | - | 1 | ⊟1942 426 |
| 21-129-8 | WASHER, Input Shaft Thrust, .059" thk., Orange | 8 | 60 | 60 | 60 | 60 | ★ | *1823 872 |
| | .078" thk. Black | 8 | 60 | 60 | 60 | 60 | * | *1638 671 |
| | .097" thk., Red | 8 | 60 | 60 | 60 | 60 | ★ | *1638 670 |
| 21-129-10 | SHAFT, Reaction, w/SUPPORT, 27 T., 6 5/8" lgh. | 6 | 60 | 60 | - | - | 1 | 1942 419 |
| | 27 Splines, 7 5/8" lgh. | 8 | 60 | 60 | 60 | 60 | 1 | 1853 594 |
| 21-129-13 | RING, Reaction Shaft Support Seal | 6 | 60 | 60 | - | - | 2 | 1942 389 |
| | Shaft Seal | 8 | 60 | 60 | 60 | 60 | 1 | 1638 664 |
| | Heavy Duty | 8 | 60 | 60 | 60 | 60 | 1 | 1824 553 |
| 21-129-23 | BUSHING, Reaction Shaft | 8 | 60 | 60 | 60 | 60 | 1 | 1853 595 |
| 21-129-24 | GASKET, Reaction Shaft Support | 6 | 60 | 60 | - | - | 1 | 1942 390 |
| 21-129-30 | SHAFT, Intermediate, w/TUBES, 66 T., 26 Splines, 12 45/64" lgh. | 8 | 60 | 60 | 60 | 60 | 1 | 1636 468 |
| 21-129-33 | RING, Intermediate Seal, Small | 8 | 60 | 60 | 60 | 60 | 2 | 1636 324 |
| | Large | 8 | 60 | 60 | 60 | 60 | 4 | 1672 287 |



MyMopar.com

## AUTOMATIC 3-SPEED TRANSMISSION

### 21-131-0 TRANSMISSION REGULATOR VALVE BODY AND PARTS

| CODE | PART NAME AND DESCRIPTION | NO. OF CYL. | PLYMOUTH | DODGE | DESOTO | CHRYSLER AND IMPERIAL | PER CAR | PART NUMBER |
|---|---|---|---|---|---|---|---|---|
| 21-131-5 | BODY | 8 | 60 | 60 | 60 | 60 | 1 | 1636 311 |
| 21-131-6 | GASKET, Body | 8 | 60 | 60 | 60 | 60 | 1 | 1636 303 |
| 21-131-10 | VALVE, Regulator | 8 | 60 | 60 | 60 | 60 | 1 | 1672 359 |
| 21-131-12 | VALVE, Front and Rear Pump Check | 8 | 60 | 60 | 60 | 60 | 1 | 1636 396 |
| 21-131-15 | SPRING, Regulator Valve | 8 | 60 | 60 | 60 | 60 | 1 | 1854 319 |
| | w/Ram Manifold, PD1-D500, PD2-D500, PD4-D500, PC3-C300 | 8 | 60 | 60 | 60 | 60 | 1 | 1949 673 |
| 21-131-20 | SEAT, Regulator Valve Spring | 8 | 60 | 60 | 60 | 60 | 1 | 1672 362 |
| | CUP, Regulator Valve Spring | 8 | 60 | 60 | 60 | 60 | 1 | 1672 363 |
| 21-131-25 | RETAINER, Regulator Valve Spring | 8 | 60 | 60 | 60 | 60 | 1 | 1672 364 |
| 21-131-27 | GASKET, Regulator Valve Spring Retainer | 8 | 60 | 60 | 60 | 60 | 1 | 1117 819 |
| 21-131-29 | SLEEVE, Regulator Valve Spring | 8 | 60 | 60 | 60 | 60 | 1 | 1672 361 |
| 21-131-31 | SCREW, Regulator Valve Spring Adjusting | 8 | 60 | 60 | 60 | 60 | 1 | 1672 365 |
| 21-131-35 | VALVE, Torque Converter Control | 8 | 60 | 60 | 60 | 60 | 1 | 2124 247 |
| 21-131-40 | SPRING, Torque Converter Control Valve | 8 | 60 | 60 | 60 | 60 | 1 | 1630 812 |
| 21-131-45 | RETAINER, Torque Converter Control Valve Spring | 8 | 60 | 60 | 60 | 60 | 1 | 1941 779 |
| 21-131-50 | GASKET, Torque Converter Control Valve Spring Retainer | 8 | 60 | 60 | 60 | 60 | 1 | 1408 375 |

### 21-133-0 TRANSMISSION CLUTCH

| | | | | | | | | |
|---|---|---|---|---|---|---|---|---|
| 21-133-3 | GASKET and SEAL PACKAGE, Front and Rear Clutch and Input Shaft | 8 | 60 | 60 | 60 | 60 | 1 | 1843 229 |
| 21-133-4 | RETAINER PACKAGE, Rear Clutch Piston UP TO Trans. No. 1566318 | 8 | 60 | 60 | 60 | 60 | 1 | 2240 383 |
| 21-133-5 | RETAINER, Front Clutch Piston, w/DISC, Piston and Spring, also specify 2 of 2204369 | 6 | 60 | 60 | - | - | 1 | ⊟2125 241 |
| | Rear Clutch, PD4, UP TO Trans. No. 1566318 | 8 | 60 | 60 | - | - | 1 | 1824 562 |
| | Rear Clutch, PD4, AFTER Trans. No. 1566318 | 8 | 60 | 60 | - | - | 1 | 2125 011 |
| | Rear Clutch, PD1, PD2, UP TO Trans. No. 1566318 | 8 | - | 60 | 60 | 60 | 1 | 1853 754 |
| | Rear Clutch, PD1, PD2, AFTER Trans. No. 1566318 | 8 | - | 60 | 60 | 60 | 1 | 2125 010 |
| | Rear Clutch, PP2 High Performance and Heavy Duty, PD4 Heavy Duty, UP TO Trans. No. 1566318 | 8 | 60 | 60 | - | - | 1 | 1853 754 |
| | Rear Clutch, PP2 High Performance and Heavy Duty, PD4 Heavy Duty, AFTER Trans. No. 1566318 | 8 | 60 | 60 | - | - | 1 | 2125 010 |
| | Rear Clutch, Heavy Duty, w/o Accumulator Spring, PD1, PD4, PC1, PC2, PC3, UP TO Trans. No. 1566318 | 8 | 60 | 60 | - | 60 | 1 | 1854 300 |
| | Rear Clutch, Heavy Duty, w/o Accumulator Spring, PD1, PD4, PC1, PC2, PC3, AFTER Trans. No. 1566318 | 8 | 60 | 60 | - | 60 | 1 | 2125 012 |
| | Rear Clutch, w/Ram Manifold, PD1-D500, PD2-D500, PD4-D500, PC3-C300, UP TO Trans. No. 1566318 | 8 | 60 | 60 | 60 | 60 | 1 | 1854 300 |
| | Rear Clutch, w/Ram Manifold, PD1-D500, PD2-D500, PD4-D500, PC3-C300, AFTER Trans. No. 1566318 | 8 | 60 | 60 | 60 | 60 | 1 | 2125 012 |
| 21-133-7 | RETAINER, Front Clutch Piston, w/BUSHING, UP TO Trans. No. 118379 | 6 | 60 | 60 | - | - | 1 | *1942 392 |
| | Front Clutch Piston, AFTER Trans. No. 118379 | 6 | 60 | 60 | - | - | 1 | ⊟2125 242 |
| | Front Clutch Piston | 8 | 60 | 60 | 60 | 60 | 1 | 1853 923 |
| | Rear Clutch Piston, UP TO Trans. 1566318 | 8 | 60 | 60 | 60 | 60 | 1 | 1732 122 |
| | Rear Clutch Piston, AFTER Trans. No. 1566318 | 8 | 60 | 60 | 60 | 60 | 1 | 2125 009 |


MyMopar.com

## AUTOMATIC 3-SPEED TRANSMISSION

### 21-133-0 TRANSMISSION CLUTCH - Cont'd

| CODE | PART NAME AND DESCRIPTION | NO. OF CYL. | PLYMOUTH | DODGE | DESOTO | CHRYSLER AND IMPERIAL | PER CAR | PART NUMBER |
|---|---|---|---|---|---|---|---|---|
| 21-133-15 | PISTON, Front Clutch | 6 | 60 | 60 | - | - | 1 | 1942 395 |
| | Rear Clutch, UP TO Trans. No. 184159 | 6 | 60 | 60 | - | - | 1 | *1942 411 |
| | Rear Clutch, AFTER Trans. No. 184159 | 6 | 60 | 60 | - | - | 1 | ⊟2125 198 |
| | Front Clutch | 8 | 60 | 60 | 60 | 60 | 1 | 1853 858 |
| | Rear Clutch, PD4 | 8 | 60 | 60 | - | - | 1 | 1736 333 |
| | Rear Clutch, PP2 Heavy Duty and High Performance, PD4 Heavy Duty | 8 | 60 | 60 | - | - | 1 | 1636 276 |
| | Rear Clutch, PD1, PD2 | 8 | - | 60 | 60 | 60 | 1 | 1636 276 |
| 21-133-17 | SEAL, Front Clutch Piston, Inner | 6 | 60 | 60 | - | - | 1 | 1942 396 |
| | Outer | 6 | 60 | 60 | - | - | 1 | 1942 397 |
| | Rear Clutch, Inner, UP TO Trans. No. 184159 | 6 | 60 | 60 | - | - | 1 | *1942 412 |
| | Rear Clutch, Inner, AFTER Trans. No. 184159 | 6 | 60 | 60 | - | - | 1 | ⊟2125 187 |
| | Outer | 6 | 60 | 60 | - | - | 1 | 1942 397 |
| | Front Clutch, Inner | 8 | 60 | 60 | 60 | 60 | 1 | 1824 551 |
| | Outer | 8 | 60 | 60 | 60 | 60 | 1 | 1824 549 |
| | Rear Clutch, Inner | 8 | 60 | 60 | 60 | 60 | 1 | 1824 552 |
| | Outer | 8 | 60 | 60 | 60 | 60 | 1 | 1824 550 |
| 21-133-20 | SPRING, Front Clutch Piston Return | 6 | 60 | 60 | - | - | 1 | 1942 467 |
| | Rear Clutch | 6 | 60 | 60 | - | - | 1 | 1942 414 |
| | Front Clutch, Inner | 8 | 60 | 60 | 60 | 60 | 1 | 1636 365 |
| | Rear Clutch, PD4 | 8 | 60 | 60 | - | - | 1 | 1636 364 |
| | Rear Clutch, PD1, PD2 | 8 | - | 60 | 60 | 60 | 1 | 1738 235 |
| | Rear Clutch, PP2 High Performance and Heavy Duty, PD4 Heavy Duty | 8 | 60 | 60 | - | - | 1 | 1738 235 |
| | Rear Clutch, Heavy Duty, PD1, PC1, PC2, PC3 | 8 | - | 60 | - | 60 | 1 | 1636 364 |
| | w/Ram Manifold, PD1-D500, PD2-D500, PD4-D500, PC3-C300 | 8 | - | 60 | 60 | 60 | 1 | 1636 364 |
| 21-133-22 | RETAINER, Front Clutch Piston Spring | 6 | 60 | 60 | - | - | 1 | 1942 399 |
| | | 8 | 60 | 60 | 60 | 60 | 1 | 1619 392 |
| | Rear Clutch | 8 | 60 | 60 | 60 | 60 | 1 | 1636 289 |
| 21-133-25 | SNAP RING, Front Clutch Piston Return Spring | 8 | 60 | 60 | 60 | 60 | 1 | 1636 356 |
| | Rear Clutch | 8 | 60 | 60 | 60 | 60 | 1 | 1636 326 |
| | Rear Clutch | 6 | 60 | 60 | - | - | 1 | 1942 415 |
| 21-133-30 | WASHER, Front Clutch and Sun Gear Thrust, w/2 TABS | 8 | 60 | 60 | 60 | 60 | 1 | 1636 290 |
| 21-133-32 | LEVER, Front Clutch | 8 | 60 | 60 | 60 | 60 | 8 | 1853 860 |
| 21-133-34 | RETAINER, Front Clutch Piston Lever | 8 | 60 | 60 | 60 | 60 | 1 | 1949 381 |
| 21-133-35 | HUB, Front Clutch Driving Disc | 8 | 60 | 60 | 60 | 60 | 1 | 1853 859 |
| 21-133-36 | DISC, Front Clutch Driving | 6 | 60 | 60 | - | - | 4 | 1942 404 |
| | Rear Clutch | 6 | 60 | 60 | - | - | 3 | 1942 418 |
| | Front Clutch, .060" to .063" thk. | 8 | 60 | 60 | 60 | 60 | ★ | 1949 196 |
| | .073" to .076" thk. | 8 | 60 | 60 | 60 | 60 | ★ | 1949 197 |
| | .087" to .090" thk. | 8 | 60 | 60 | 60 | 60 | ★ | 1949 198 |
| | Rear Clutch | 8 | 60 | 60 | 60 | 60 | ★ | 1732 116 |
| 21-133-38 | PLATE, Front Clutch | 6 | 60 | 60 | - | - | 4 | 1942 403 |
| | Rear Clutch | 6 | 60 | 60 | - | - | 2 | 1942 403 |
| | Front Clutch | 8 | 60 | 60 | 60 | 60 | 3 | 1636 262 |
| | Rear Clutch | 8 | 60 | 60 | 60 | 60 | ★ | 1636 262 |
| 21-133-39 | PLATE, Front Clutch Pressure | 6 | 60 | 60 | - | - | 1 | 1942 402 |
| | Rear Clutch, Front | 6 | 60 | 60 | - | - | 1 | 1949 930 |
| | Rear Clutch, Rear | 6 | 60 | 60 | - | - | 1 | 1942 402 |
| | Front Clutch Pressure | 8 | 60 | 60 | 60 | 60 | 1 | *2124 991 |
| | Rear Clutch Pressure | 8 | 60 | 60 | 60 | 60 | 1 | *2124 991 |
| 21-133-40 | GEAR, Sun, w/BUSHING | 6 | 60 | 60 | - | - | 1 | 1942 434 |
| 21-133-42 | SHELL, Sun Gear Driving | 6 | 60 | 60 | - | - | 1 | 1942 438 |
| 21-133-43 | SNAP RING, Front Clutch, Outer | 6 | 60 | 60 | - | - | 1 | 1942 421 |
| | Inner | 6 | 60 | 60 | - | - | 1 | 1942 400 |
| | Rear Clutch Retainer, .060" thk. | 6 | 60 | 60 | - | - | ★ | 1942 421 |
| | .068" thk. | 6 | 60 | 60 | - | - | ★ | 1942 422 |
| | .076" thk. | 6 | 60 | 60 | - | - | ★ | 1942 423 |

★ Indicates use as required. Numerals in parentheses ( ) refer to notes. Printed in U.S.A.
⊟ Indicates parts not listed in any previous parts book. Prices and specifications subject to change without notice.
Dec. 9, 1960 Supersedes April 20, 1960. * Indicates change or addition.



MyMopar.com

## AUTOMATIC 3 - SPEED TRANSMISSION

### 21-133-0 TRANSMISSION CLUTCH - Cont'd

| CODE | PART NAME AND DESCRIPTION | NO. OF CYL. | PLYMOUTH | DODGE | DESOTO | CHRYSLER AND IMPERIAL | PER CAR | PART NUMBER |
|---|---|---|---|---|---|---|---|---|
| 21-133-43 | SNAP RING - Cont'd | | | | | | | |
| | Front and Rear Clutch, .060" thk. | 8 | 60 | 60 | 60 | 60 | ★ | 1636 315 |
| | .064" thk. | 8 | 60 | 60 | 60 | 60 | ★ | 1636 316 |
| | .069" thk. | 8 | 60 | 60 | 60 | 60 | ★ | 1636 317 |
| 21-133-45 | RING, Sun Gear Rear Clutch | 8 | 60 | 60 | 60 | 60 | 2 | 1636 469 |
| 21-133-46 | RING, Sun Gear Driving Shell Lock | 6 | 60 | 60 | - | - | 2 | 1942 439 |
| 21-133-47 | PLATE, Sun Gear Driving Shell Thrust | 6 | 60 | 60 | - | - | 2 | 2124 258 |
| 21-133-48 | WASHER, Sun Gear Driving Shell Thrust | 6 | 60 | 60 | - | - | 2 | 1942 441 |
| 21-133-65 | WASHER, Front Clutch Thrust .042" thk., Plastic, UP TO Trans. No. 118379 | 6 | 60 | 60 | - | - | 1 | *2124 581 |
| | Front Clutch, Front and Rear, AFTER Trans. No. 118379, Plastic | 6 | 60 | 60 | - | - | 2 | E2204 369 |
| 21-133-70 | SPRING, Front Clutch Cushion | 8 | 60 | 60 | 60 | 60 | 1 | 1823 731 |
| 21-133-71 | WASHER, Front Clutch Cushion Spring Spacer, Front Clutch Lever, Heavy Duty Trans. Only, PD1, PD4, PC1, PC2, PC3 | 8 | 60 | 60 | - | 60 | 1 | 1853 943 |

### 21-134-0 TRANSMISSION KICKDOWN PLANET PINION CARRIER AND COMPONENTS, FRONT AND REAR PLANET PINION CARRIER AND COMPONENTS

| | | | | | | | | |
|---|---|---|---|---|---|---|---|---|
| 21-134-5 | CARRIER, w/PINIONS, Front | 6 | 60 | 60 | - | - | 1 | 1942 427 |
| | Rear | 6 | 60 | 60 | - | - | 1 | 1942 433 |
| | Kickdown | 8 | 60 | 60 | 60 | 60 | 1 | 1736 194 |
| | Kickdown, w/Ram Manifold, PD1-D500, PD4-D500, PC3-C300 | 8 | 60 | 60 | 60 | 60 | 1 | 1949 676 |
| 21-134-30 | PLATE, Kickdown Carrier Thrust, 3.42" O.D. | 8 | 60 | 60 | 60 | 60 | 1 | 1638 667 |
| | WASHER, Kickdown Carrier Thrust, w/3 TABS, 3.38" O.D. | 8 | 60 | 60 | 60 | 60 | 1 | 1636 376 |
| 21-134-36 | SUPPORT, Front Annulus Gear | 6 | 60 | 60 | - | - | 1 | 1942 446 |
| | Rear Annulus Gear | 6 | 60 | 60 | - | - | 1 | 1942 450 |
| 21-134-38 | Gear, Front and Rear Annulus | 6 | 60 | 60 | - | - | 2 | 1942 443 |
| | Kickdown Annulus | 8 | 60 | 60 | 60 | 60 | 1 | 1636 264 |
| 21-134-40 | SNAP RING, Front and Rear Annulus Gear | 6 | 60 | 60 | - | - | 2 | 1942 444 |
| | Front Annulus Gear Support | 6 | 60 | 60 | - | - | 1 | 1942 448 |
| | Kickdown Annulus Gear, .060" thk. | 8 | 60 | 60 | 60 | 60 | ★ | 1636 357 |
| | .064" thk. | 8 | 60 | 60 | 60 | 60 | ★ | 1636 358 |
| 21-134-45 | WASHER, Front Annulus Gear Support Thrust | 6 | 60 | 60 | - | - | 1 | 1942 447 |
| 21-134-50 | Gear, Reverse Sun, w/BUSHING | 8 | 60 | 60 | 60 | 60 | 1 | 1636 307 |
| 21-134-51 | WASHER, Sun Gear Thrust | 8 | 60 | 60 | 60 | 60 | 1 | 1636 314 |

### 21-135-0 TRANSMISSION REVERSE PLANET PINION CARRIER AND COMPONENT PARTS

| | | | | | | | | |
|---|---|---|---|---|---|---|---|---|
| 21-135-9 | SNAP RING, Output Shaft Drive Housing | 8 | 60 | 60 | 60 | 60 | 1 | 1636 319 |
| 21-135-25 | GEAR, Reverse Annulus | 8 | 60 | 60 | 60 | 60 | 1 | 1736 193 |
| 21-135-50 | CARRIER, Low and Reverse Planet Pinion, UP TO Trans. No. 1687801 | 8 | 60 | 60 | 60 | 60 | 1 | *1736 194 |
| | AFTER Trans. No. 1687801 | 8 | 60 | 60 | 60 | 60 | 1 | E2125 070 |
| | w/Ram Manifold, PD1-D500, PD2-D500, PD4-D500, PC3-C300, UP TO Trans. No. 1687801 | 8 | 60 | 60 | 60 | 60 | 1 | *1949 676 |
| | w/Ram Manifold, PD1-D500, PD2-D500, PD4-D500, PC3-300, AFTER Trans. No. 1687801 | 8 | 60 | 60 | 60 | 60 | 1 | E2125 071 |

### 21-136-0 TRANSMISSION BANDS

| | | | | | | | | |
|---|---|---|---|---|---|---|---|---|
| 21-136-5 | BAND, Kickdown | 6 | 60 | 60 | - | - | 1 | 2124 595 |
| | | 8 | 60 | 60 | 60 | 60 | 1 | 1636 362 |
| 21-136-15 | STRUT, Kickdown Band | 6-8 | 60 | 60 | 60 | 60 | 1 | 1630 896 |
| | ANCHOR, Kickdown Band | 8 | 60 | 60 | 60 | 60 | 1 | 1736 427 |
| 21-136-17 | SCREW, Kickdown Band Adjusting | 6 | 60 | 60 | - | - | 1 | 1942 477 |
| | | 8 | 60 | 60 | 60 | 60 | 1 | 1736 215 |



MyMopar.com

# AUTOMATIC 3-SPEED TRANSMISSION

## 21-136-0 TRANSMISSION BANDS - Cont'd

| CODE | PART NAME AND DESCRIPTION | NO. OF CYL. | PLYMOUTH | DODGE | DESOTO | CHRYSLER AND IMPERIAL | PER CAR | PART NUMBER |
|---|---|---|---|---|---|---|---|---|
| 21-136-20 | LEVER, Kickdown Band | 6 | 60 | 60 | - | - | 1 | 2124 579 |
| | | 8 | 60 | 60 | 60 | 60 | 1 | 1949 655 |
| | High Performance and Heavy Duty | 8 | 60 | - | - | - | 1 | 1736 217 |
| | Heavy Duty, PD1, PD4, PC1, PC2, PC3 | 8 | - | 60 | - | 60 | 1 | 1736 217 |
| | w/Ram Manifold, PD1-D500, PD2-D500, PD4-D500, PC3-C300 | 8 | - | 60 | 60 | 60 | 1 | 1736 217 |
| 21-136-23 | SHAFT, Kickdown Band Lever | 6 | 60 | 60 | - | - | 1 | 1942 132 |
| 21-136-30 | BAND, Reverse | 6 | 60 | 60 | - | - | 1 | 1942 487 |
| 21-136-41 | ANCHOR, Reverse Band | 6 | 60 | 60 | - | - | 1 | 1942 496 |
| | STRUT, Reverse Band | 6 | 60 | 60 | - | - | 1 | 1942 497 |
| | STRUT, Low and Reverse Band | 8 | 60 | 60 | 60 | 60 | 1 | 1736 423 |
| | ANCHOR, Low and Reverse Band | 8 | 60 | 60 | 60 | 60 | 1 | 1736 427 |
| 21-136-44 | LINK, Reverse Band | 6 | 60 | 60 | - | - | 1 | 1942 494 |
| 21-136-47 | LEVER, Reverse Band, w/STEM | 6 | 60 | 60 | - | - | 1 | 1942 491 |
| | Reverse Band, Short | 6 | 60 | 60 | - | - | 1 | 1942 140 |
| 21-136-49 | SHAFT, Reverse Band Lever | 6 | 60 | 60 | - | - | 1 | 1942 493 |
| 21-136-52 | SCREW, Reverse Band Adjusting | 6 | 60 | 60 | - | - | 1 | 1942 543 |
| | Low and Reverse Band Adjusting | 8 | 60 | 60 | 60 | 60 | 1 | 1736 215 |
| 21-136-65 | DRUM, Reverse | 6 | 60 | 60 | - | - | 1 | 1942 451 |
| 21-136-68 | SNAP RING, Reverse Drum | 6 | 60 | 60 | - | - | 1 | 1942 452 |
| | Low and Reverse Band Drum, .060" thk. | 8 | 60 | 60 | 60 | 60 | ★ | 1636 315 |
| | .064" thk. | 8 | 60 | 60 | 60 | 60 | ★ | 1636 316 |
| | .068" thk. | 8 | 60 | 60 | 60 | 60 | ★ | 1636 317 |
| 21-136-80 | BAND, Low and Reverse | 8 | 60 | 60 | 60 | 60 | 1 | 1636 367 |
| 21-136-200 | LEVER, Low and Reverse Band | 8 | 60 | 60 | 60 | 60 | 1 | 1736 519 |
| 21-136-210 | DRUM, Low and Reverse Band | 8 | 60 | 60 | 60 | 60 | 1 | 1736 187 |
| 21-136-214 | SUPPORT, Intermediate, w/CAM | 8 | 60 | 60 | 60 | 60 | 1 | 1636 281 |
| 21-136-225 | SCREW, Intermediate Support | 8 | 60 | 60 | 60 | 60 | 3 | 1636 418 |
| 21-136-230 | HUB, "O" Running Clutch, w/BUSHING | 8 | 60 | 60 | 60 | 60 | 1 | 1736 207 |
| 21-136-232 | RACE, "O" Running Clutch | 6 | 60 | 60 | - | - | 1 | 1942 461 |
| 21-136-235 | ROLLER, "O" Running Clutch Cam | 6 | 60 | 60 | - | - | 10 | 670 776 |
| | | 8 | 60 | 60 | 60 | 60 | 10 | 1619 370 |
| 21-136-236 | SPRING, "O" Running Clutch Cam Roller | 6 | 60 | 60 | - | - | 10 | 1942 187 |
| | | 8 | 60 | 60 | 60 | 60 | 10 | 1539 546 |
| 21-136-237 | WASHER, "O" Running Clutch Race Thrust | 6 | 60 | 60 | - | - | 1 | 1942 441 |

## 21-137-0 TRANSMISSION SERVOS

| | | | | | | | | |
|---|---|---|---|---|---|---|---|---|
| 21-137-5 | PISTON, Kickdown Servo | 6 | 60 | 60 | - | - | 1 | 1942 478 |
| | | 8 | 60 | 60 | 60 | 60 | 1 | 1736 218 |
| 21-137-8 | RING, Kickdown Servo Piston Seal, | | | | | | | |
| | Small | 6 | 60 | 60 | - | - | 1 | 1672 287 |
| | Large | 6 | 60 | 60 | - | - | 1 | 1636 470 |
| | Small | 8 | 60 | 60 | 60 | 60 | 1 | 1314 249 |
| | Medium | 8 | 60 | 60 | 60 | 60 | 1 | 1322 363 |
| | Large | 8 | 60 | 60 | 60 | 60 | 1 | 1736 224 |
| | Kickdown Servo Guide Seal | 6 | 60 | 60 | - | - | 1 | 1636 470 |
| | | 8 | 60 | 60 | 60 | 60 | 1 | 1736 224 |
| 21-137-11 | ROD, Kickdown Servo Piston | 6 | 60 | 60 | - | - | 1 | 1942 482 |
| | | 8 | 60 | 60 | 60 | 60 | 1 | 1736 221 |
| 21-137-13 | GUIDE, Kickdown Servo Piston Rod | 6 | 60 | 60 | - | - | 1 | 1942 485 |
| | | 8 | 60 | 60 | 60 | 60 | 1 | 1736 219 |
| 21-137-19 | SNAP RING, Kickdown Servo Piston Rod Guide | 6 | 60 | 60 | - | - | 1 | 1942 486 |
| | | 8 | 60 | 60 | 60 | 60 | 1 | 1736 223 |
| 21-137-22 | SPRING, Kickdown Servo Piston | 6 | 60 | 60 | - | - | 1 | 1942 481 |
| | | 8 | 60 | 60 | 60 | 60 | 1 | 1736 222 |
| 21-137-32 | SHAFT, Kickdown and Reverse Lever | 8 | 60 | 60 | 60 | 60 | 1 | 1638 565 |
| 21-137-33 | SPACER, Servo Lever Shaft | 8 | 60 | 60 | 60 | 60 | 1 | 1636 446 |


MyMopar.com

## AUTOMATIC 3-SPEED TRANSMISSION

### 21-137-0 TRANSMISSION SERVOS - Cont'd

| CODE | PART NAME AND DESCRIPTION | NO. OF CYL. | PLYMOUTH | DODGE | DESOTO | CHRYSLER AND IMPERIAL | PER CAR | PART NUMBER |
|---|---|---|---|---|---|---|---|---|
| 21-137-35 | PISTON, Reverse Servo | 6 | 60 | 60 | - | - | 1 | 1942 498 |
| | | 8 | 60 | 60 | 60 | 60 | 1 | 1732 099 |
| 21-137-41 | SPRING, Reverse Servo Piston Cushion | 6 | 60 | 60 | - | - | 1 | 1823 941 |
| | | 8 | 60 | 60 | 60 | 60 | 1 | 1732 102 |
| 21-137-44 | SNAP RING, Reverse Servo Piston Plug | 6 | 60 | 60 | - | - | 1 | 1823 940 |
| | | 8 | 60 | 60 | 60 | 60 | 1 | 1732 101 |
| 21-137-47 | PLUG, Reverse Servo Piston | 6 | 60 | 60 | - | - | 1 | 1942 152 |
| | | 8 | 60 | 60 | 60 | 60 | 1 | 1736 214 |
| 21-137-50 | RING, Reverse Servo Piston Seal, Rubber | 6 | 60 | 60 | - | - | 1 | 1942 499 |
| | | 8 | 60 | 60 | 60 | 60 | 1 | 1329 638 |
| 21-137-53 | SPRING, Reverse Servo Piston | 6 | 60 | 60 | - | - | 1 | 1942 458 |
| | | 8 | 60 | 60 | 60 | 60 | 1 | 1824 316 |
| 21-137-56 | RETAINER, Reverse Servo Piston Spring | 6 | 60 | 60 | - | - | 1 | 1942 501 |
| | | 8 | 60 | 60 | 60 | 60 | 1 | 1824 317 |
| 21-137-59 | SNAP RING, Reverse Servo Piston Spring Retainer | 6 | 60 | 60 | - | - | 1 | 1942 502 |
| | | 8 | 60 | 60 | 60 | 60 | 1 | 1329 642 |
| 21-137-200 | PISTON, Accumulator | 6 | 60 | 60 | - | - | 1 | 1942 153 |
| | | 8 | 60 | 60 | 60 | 60 | 1 | 1736 226 |
| 21-137-202 | RING, Accumulator Piston Seal, Small | 6 | 60 | 60 | - | - | 1 | 1941 831 |
| | Large | 6 | 60 | 60 | - | - | 1 | 2124 255 |
| | Small | 8 | 60 | 60 | 60 | 60 | 1 | 1672 287 |
| | Large | 8 | 60 | 60 | 60 | 60 | 1 | 1736 233 |
| 21-137-205 | SPRING, Accumulator Piston | 6 | 60 | 60 | - | - | 1 | 1942 156 |
| | | 8 | 60 | 60 | 60 | 60 | 1 | *1949 837 |

### 21-138-0 TRANSMISSION GOVERNOR

| | | | | | | | | |
|---|---|---|---|---|---|---|---|---|
| 21-138-2 | REPAIR PACKAGE, Governor | 6 | 60 | 60 | - | - | 1 | 2196 998 |
| | | 8 | 60 | 60 | 60 | 60 | 1 | 2084 602 |
| | High Performance | 8 | - | - | 60 | - | 1 | 2084 603 |
| | w/Ram Manifold, PD2-D500, PD4-D500, PC3-C300 | 8 | 60 | 60 | 60 | 60 | 1 | 1843 403 |
| 21-138-6 | SCREW, Governor Body, w/WASHER | 6-8 | 60 | 60 | 60 | 60 | 4 | 1823 543 |
| 21-138-7 | SNAP RING, Governor Body, UP TO Trans. No. 169478 | 6 | 60 | 60 | - | - | 1 | *1942 471 |
| | AFTER Trans. No. 169478 | 6 | 60 | 60 | - | - | 1 | ⊟6022 583 |
| 21-138-9 | SCREW, Governor Locating | 8 | 60 | 60 | 60 | 60 | 1 | 1736 468 |
| 21-138-10 | SUPPORT, Governor | 6 | 60 | 60 | - | - | 1 | 1949 776 |
| 21-138-13 | WEIGHT, Governor, Outer | 6-8 | 60 | 60 | 60 | 60 | 1 | 1636 461 |
| | Inner | 6-8 | 60 | 60 | 60 | 60 | 1 | 1636 462 |
| | w/Ram Manifold, Outer, PD1-D500, PD2-D500, PD4-D500, PC3-C300 | 8 | 60 | 60 | 60 | 60 | 1 | 1823 726 |
| 21-138-15 | SPRING, Governor Weight | 6 | 60 | 60 | - | - | 1 | 2124 662 |
| | | 8 | 60 | 60 | 60 | 60 | 1 | 1949 858 |
| | High Performance | 8 | 60 | - | 60 | - | 1 | 1949 859 |
| | w/Ram Manifold, PD1-D500, PD2-D500, PD4-D500, PC3-C300 | 8 | 60 | 60 | 60 | 60 | 1 | 2124 252 |
| 21-138-19 | SNAP RING, Governor Weight, Inner | 6-8 | 60 | 60 | 60 | 60 | 1 | 1636 464 |
| | Outer | 6-8 | 60 | 60 | 60 | 60 | 1 | 1636 465 |
| 21-138-21 | LOCK, Body Bolt | 6 | 60 | 60 | - | - | 2 | 2125 024 |
| 21-138-23 | VALVE, Governor | 6 | 60 | 60 | - | - | 1 | 2124 663 |
| | | 8 | 60 | 60 | 60 | 60 | 1 | 1736 424 |
| 21-138-26 | SHAFT, Governor Valve | 6-8 | 60 | 60 | 60 | 60 | 1 | 1556 082 |
| 21-138-29 | SNAP RING, Governor Valve Shaft | 6-8 | 60 | 60 | 60 | 60 | 2 | 1638 461 |
| 21-138-38 | RING, Governor Support Seal | 6 | 60 | 60 | - | - | 2 | 1942 109 |
| | | 8 | 60 | 60 | 60 | 60 | 2 | 1636 470 |


MyMopar.com

## AUTOMATIC 3-SPEED TRANSMISSION

### 21-139-0 TRANSMISSION VALVE BODY AND VALVES

| CODE | PART NAME AND DESCRIPTION | NO. OF CYL. | PLYMOUTH | DODGE | DESOTO | CHRYSLER AND IMPERIAL | PER CAR | PART NUMBER |
|---|---|---|---|---|---|---|---|---|
| 21-139-4 | BODY, w/Transfer PLATE | 6 | 60 | 60 | - | - | 1 | 1942 242 |
| | | 8 | 60 | 60 | 60 | 60 | 1 | 1854 269 |
| 21-139-5 | BODY | 8 | 60 | 60 | 60 | 60 | 1 | 1949 418 |
| 21-139-9 | VALVE, Manual | 6 | 60 | 60 | - | - | 1 | 1942 211 |
| | | 8 | 60 | 60 | 60 | 60 | 1 | 1941 625 |
| 21-139-12 | LEVER, Manual Valve | 6 | 60 | 60 | - | - | 1 | 1942 223 |
| | | 8 | 60 | 60 | 60 | 60 | 1 | 1941 688 |
| 21-139-24 | SPRING, Manual Valve, Lever Detent | 6-8 | 60 | 60 | 60 | 60 | 1 | 1942 225 |
| 21-139-30 | VALVE, Throttle | 6 | 60 | 60 | - | - | 1 | 1636 423 |
| | | 8 | 60 | 60 | 60 | 60 | 1 | 1941 622 |
| 21-139-33 | SPRING, Throttle Valve | 6-8 | 60 | 60 | 60 | 60 | 1 | 1949 847 |
| 21-139-47 | SEAL, Throttle Lever Shaft | 6-8 | 60 | 60 | 60 | 60 | 1 | 1732 183 |
| 21-139-48 | WASHER, Throttle Lever Shaft | 6-8 | 60 | 60 | 60 | 60 | 1 | 1949 565 |
| 21-139-49 | SNAP RING, Throttle Valve Lever Shaft | 6-8 | 60 | 60 | 60 | 60 | 1 | 1539 430 |
| 21-139-50 | LEVER, Throttle Valve | 6 | 60 | 60 | - | - | 1 | 1949 652 |
| | | 8 | 60 | 60 | 60 | 60 | 1 | 1941 626 |
| 21-139-63 | PLUG, Regulator Valve Throttle Pressure | 6 | 60 | 60 | - | - | 1 | 1942 245 |
| | Regulator Valve Line Pressure | 6 | 60 | 60 | - | - | 1 | 1942 218 |
| 21-139-64 | SLEEVE, Regulator Valve Line Pressure Plug | 6 | 60 | 60 | - | - | 1 | 1942 213 |
| 21-139-67 | VALVE, Regulator | 6 | 60 | 60 | - | - | 1 | 1942 216 |
| 21-139-68 | SPRING, Regulator Valve | 6 | 60 | 60 | - | - | 1 | 2124 246 |
| 21-139-70 | SEAT, Regulator Valve Spring | 6 | 60 | 60 | - | - | 1 | 2124 285 |
| 21-139-71 | RETAINER, Regulator Valve Spring | 6 | 60 | 60 | - | - | 1 | 1942 222 |
| 21-139-74 | SCREW, Line Pressure Adjusting | 6 | 60 | 60 | - | - | 1 | 1949 760 |
| 21-139-75 | SNAP RING, Line Pressure Adjusting Screw | 6 | 60 | 60 | - | - | 1 | 2124 284 |
| 21-139-76 | NUT, Line Pressure Adjusting Screw | 6 | 60 | 60 | - | - | 1 | 1949 762 |
| | Throttle Pressure Adjusting Screw Lock | 6 | 60 | 60 | - | - | 1 | 1949 523 |
| 21-139-78 | VALVE, Kickdown | 6-8 | 60 | 60 | 60 | 60 | 1 | 1941 623 |
| | PLUG, Kickdown Detent | 6-8 | 60 | 60 | 60 | 60 | 1 | 1941 624 |
| 21-139-79 | SCREW, Kickdown Detent Plug Stop, w/WASHER | 8 | 60 | 60 | 60 | 60 | 1 | 2124 382 |
| 21-139-95 | VALVE, Shuttle | 6-8 | 60 | 60 | 60 | 60 | 1 | 1854 275 |
| | PLUG, Shuttle Valve | 6-8 | 60 | 60 | 60 | 60 | 1 | 1854 274 |
| 21-139-98 | SNAP RING, Shuttle Valve | 6-8 | 60 | 60 | 60 | 60 | 1 | 1539 430 |
| 21-139-101 | SPRING, Shuttle Valve | 6 | 60 | 60 | - | - | 1 | 2124 697 |
| | UP TO Trans. No. 1542032 | 8 | 60 | 60 | 60 | 60 | 1 | 1854 278 |
| | AFTER Trans. No. 1542032 | 8 | 60 | 60 | 60 | 60 | 1 | 2124 697 |
| 21-139-105 | VALVE, 1-2 Shift | 6-8 | 60 | 60 | 60 | 60 | 1 | 1941 602 |
| | PLUG, 1-2 Shift Valve | 6-8 | 60 | 60 | 60 | 60 | 1 | 1941 603 |
| | Valve, 2-3 Shift | 6-8 | 60 | 60 | 60 | 60 | 1 | 1941 600 |
| | PLUG, 2-3 Shift Valve | 6-8 | 60 | 60 | 60 | 60 | 1 | 1941 601 |
| 21-139-108 | SPRING, 1-2 Shift Valve | 8 | 60 | 60 | 60 | 60 | 1 | *1942 229 |
| | 1-2 Shift Valve, UP TO Trans. No. 132644 | 6 | 60 | 60 | - | - | 1 | *1942 229 |
| | 1-2 Shift Valve, AFTER Trans. No. 132644 | 6 | 60 | 60 | - | - | 1 | ⊟2204 547 |
| | 2-3 Shift Valve | 6-8 | 60 | 60 | 60 | 60 | 1 | 1942 231 |
| 21-139-117 | VALVE, Torque Converter Control Valve | 6 | 60 | 60 | - | - | 1 | 2124 256 |
| 21-139-118 | SPRING, Torque Converter Control Valve | 6 | 60 | 60 | - | - | 1 | 2124 257 |
| 21-139-135 | COVER, Regulator Valve | 6 | 60 | 60 | - | - | 1 | 1942 226 |
| | Shift Valve | 6 | 60 | 60 | - | - | 1 | 1942 228 |
| | Shuttle Valve | 6 | 60 | 60 | - | - | 1 | 1942 227 |
| | Shift Valve Plug | 6 | 60 | 60 | - | - | 1 | 1942 230 |
| | Reverse Blocker Valve | 6 | 60 | 60 | - | - | 1 | 1942 226 |
| | Reverse Blocker Valve | 8 | 60 | 60 | 60 | 60 | 1 | 1854 272 |
| | Throttle Valve | 8 | 60 | 60 | 60 | 60 | 1 | 1854 258 |
| | Governor Plug | 8 | 60 | 60 | 60 | 60 | 1 | 1854 245 |
| | Shift Valve | 8 | 60 | 60 | 60 | 60 | 1 | 1854 273 |
| 21-139-140 | PLATE, Valve Body | 6 | 60 | 60 | - | - | 1 | 1942 235 |
| | | 8 | 60 | 60 | 60 | 60 | 1 | 1941 606 |
| 21-139-143 | VALVE, Front and Rear Pump Check | 6 | 60 | 60 | - | - | 2 | 2124 552 |



MyMopar.com

## AUTOMATIC 3-SPEED TRANSMISSION

### 21-139-0 TRANSMISSION VALVE BODY AND VALVES - Cont'd

| CODE | PART NAME AND DESCRIPTION | NO. OF CYL. | PLYMOUTH | DODGE | DESOTO | CHRYSLER AND IMPERIAL | PER CAR | PART NUMBER |
|---|---|---|---|---|---|---|---|---|
| 21-139-144 | SPRING, Front and Rear Pump Check Valve | 6 | 60 | 60 | - | - | 2 | 1942 233 |
| 21-139-147 | PLATE, Transfer | 6 | 60 | 60 | - | - | 1 | 1942 236 |
| | | 8 | 60 | 60 | 60 | 60 | 1 | 1941 605 |
| 21-139-150 | SCREW, Valve Body and Transfer Plate to Case, w/WASHER | 6 | 60 | 60 | - | - | 10 | 2124 340 |
| 21-139-154 | SUPPORT, Transfer Plate | 6 | 60 | 60 | - | - | 1 | 1942 237 |
| 21-139-190 | VALVE, Reverse Blocker | 6-8 | 60 | 60 | 60 | 60 | 1 | 1854 217 |
| 21-139-193 | SPRING, Reverse Blocker, UP TO Trans. No. 163771 | 6 | 60 | 60 | - | - | 1 | *1638 691 |
| | AFTER Trans. No. 163771 | 6 | 60 | 60 | - | - | 1 | ⊟2204 493 |
| | UP TO Trans. No. 1657763 | 8 | 60 | 60 | 60 | 60 | 1 | *1638 691 |
| | AFTER Trans. No. 1657763 | 8 | 60 | 60 | 60 | 60 | 1 | ⊟2204 493 |
| 21-139-200 | VALVE, 1-2 Relay | 8 | 60 | 60 | 60 | 60 | 1 | 1854 276 |
| 21-139-202 | SPRING, 1-2 Relay Valve | 8 | 60 | 60 | 60 | 60 | 1 | 1854 277 |
| 21-139-210 | VALVE, Throttle Compensator | 8 | 60 | 60 | 60 | 60 | 1 | 1941 604 |
| 21-139-213 | SPRING, Throttle Compensator Valve | 8 | 60 | 60 | 60 | 60 | 1 | 1949 516 |

### 21-142-0 TRANSMISSION CONTROL LEVERS

| | | | | | | | | |
|---|---|---|---|---|---|---|---|---|
| 21-142-12 | LEVER | 6 | 60 | 60 | - | - | 1 | 2128 761 |
| | | 8 | 60 | 60 | 60 | 60 | 1 | 2121 473 |
| 21-142-20 | INSULATOR, Throttle Control Lever Sound | 8 | 60 | 60 | 60 | 60 | 1 | 1859 767 |
| 21-142-21 | BUSHING, Throttle Control Lever | 8 | 60 | 60 | 60 | 60 | 1 | 1859 768 |

**NOTES**


MyMopar.com

| CODE | PART NAME AND DESCRIPTION | NO. OF CYL. | PLYMOUTH | DODGE | DESOTO | CHRYSLER AND IMPERIAL | PER CAR | PART NUMBER |
|---|---|---|---|---|---|---|---|---|

## NOTES



MyMopar.com

# GROUP 22 - WHEELS

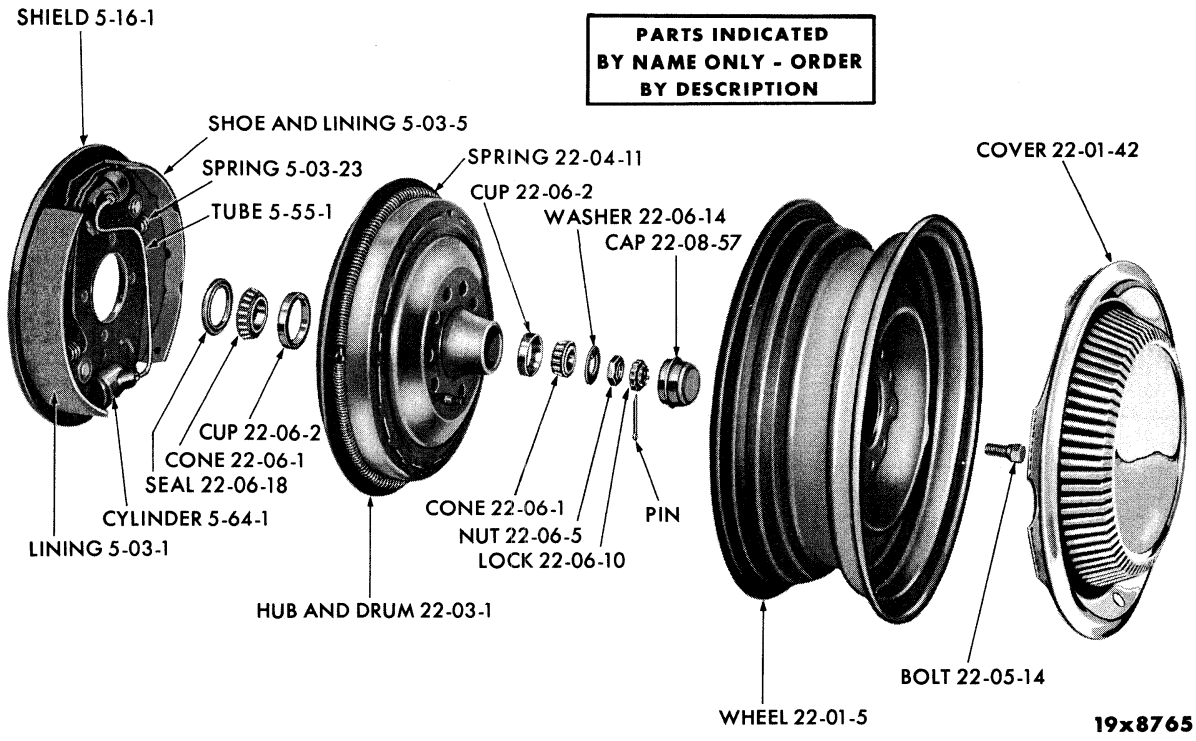


FRONT WHEEL

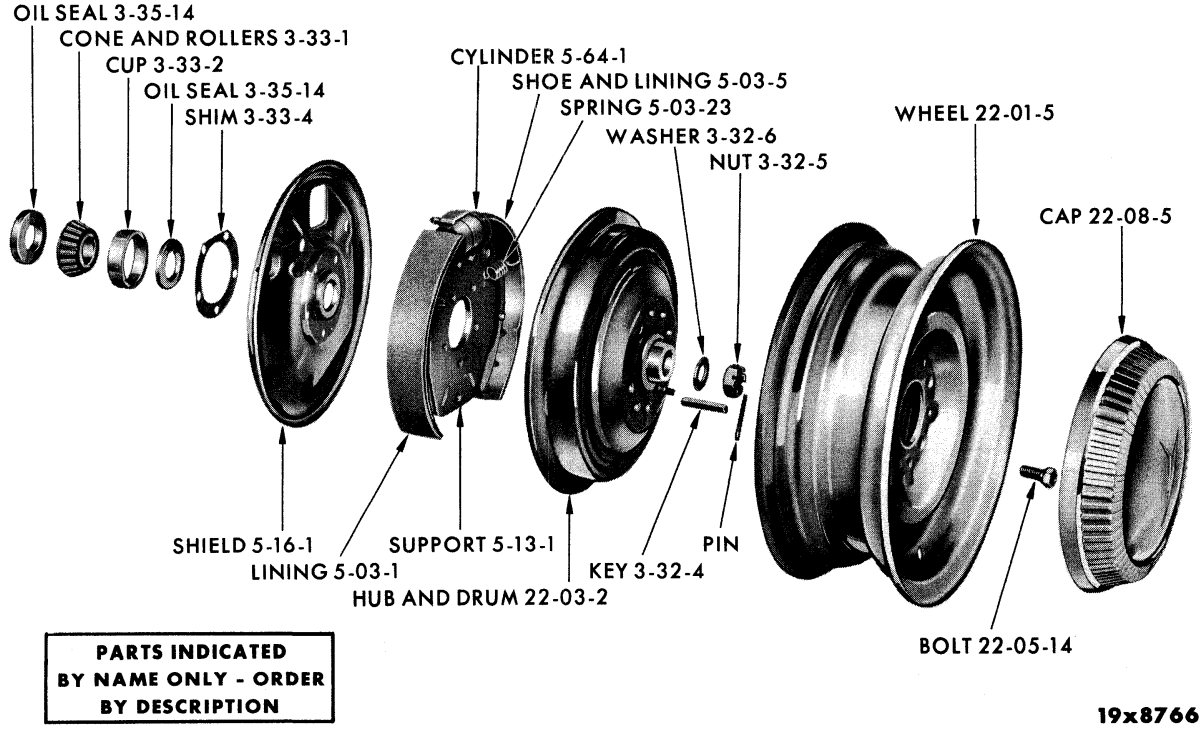


REAR WHEEL



MyMopar.com

| CODE | PART NAME AND DESCRIPTION | NO. OF CYL. | PLYMOUTH | DODGE | DESOTO | CHRYSLER AND IMPERIAL | PER CAR | PART NUMBER |
|---|---|---|---|---|---|---|---|---|

## NOTES


MyMopar.com

# GROUP 22 - WHEELS

## 22-01-0 WHEELS

TIRE CHART

| Wheel Size | Tire Size |
|---|---|
| 14 x 5.00 | 7.50 x 14 |
| 14 x 5.50 | 8.00 x 14 |
| 14 x 6.00 | 8.50 x 14 |
| 14 x 6.50 | 9.00 x 14 |
| 15 x 5.50 | 6.70 x 15 |
| 15 x 6.00 | 7.60 x 15 |
| 15 x 6.00 | 8.00 x 15 |
| 15 x 6.00 | 8.20 x 15 |

| CODE | PART NAME AND DESCRIPTION | NO. OF CYL. | PLYMOUTH | DODGE | DESOTO | CHRYSLER AND IMPERIAL | PER CAR | PART NUMBER |
|---|---|---|---|---|---|---|---|---|
| 22-01-5 | WHEEL, 14 x 5.00, PD3, PD4-H | 6-8 | 60 | 60 | - | - | 5 | 2122 448 |
| | 15 x 5.50 | 6-8 | 60 | - | - | - | 5 | 2122 453 |
| | 14 x 5.50 | 6-8 | 60 | - | 60 | - | 5 | 2084 628 |
| | 14 x 5.00, PD4-L 2 D., 4 D., PD4-M 2 D., 4 D., Sp. Cl. Cp. | 8 | - | 60 | - | - | 5 | 2122 448 |
| | 14 x 5.50, PD1, PD2, PD3, PD4-L 4 D. Sub., Cl. Sed., 4 D., PD4-M Cl. Sed., Sp. Cl. Cp. | 6-8 | - | 60 | - | - | 5 | 2084 628 |
| | 14 x 6.00, PC1, PC2 | 6-8 | 60 | 60 | 60 | 60 | 5 | 2122 433 |
| | 14 x 6.50, PC1, PC2, PC3 | 8 | - | - | - | 60 | 5 | 2122 468 |
| | 14 x 5.50, PC1 | 8 | - | - | - | 60 | 5 | *2084 628 |
| | 15 x 6.00, PY1 | 8 | - | - | - | 60 | 5 | 2122 478 |
| 22-01-42 | COVER, Wheel, use w/14" Wheel | 6-8 | 60 | - | - | - | 4 | 1943 742 |
| | Use w/15" Wheel | 6-8 | 60 | - | - | - | 4 | 1637 339 |
| | w/DOME, Spinner Type | 6-8 | - | 60 | - | - | 4 | *2122 534 |
| | w/o Dome | 6-8 | - | 60 | - | - | 4 | *1940 831 |
| | | 8 | - | - | 60 | - | 4 | 1940 830 |
| | PC1, PC2, PC3 | 8 | - | - | - | 60 | 4 | 2122 532 |
| | PC3-300 | 8 | - | - | - | 60 | 4 | 2122 530 |
| | PY1-L, PY1-M, 15" Wheel | 8 | - | - | - | 60 | 4 | *2122 537 |
| | PY1-H, 15" Wheel | 8 | - | - | - | 60 | 4 | *2122 540 |
| 22-01-43 | MEDALLION, Wheel Cover, PC3-300 | 8 | - | - | - | 60 | 4 | 1856 423 |
| | PY1 | 8 | - | - | - | 60 | 4 | 2122 542 |
| | LUG, Spinner Type | 6-8 | - | 60 | - | - | 16 | *2122 536 |
| | PY1 | 8 | - | - | - | 60 | ★ | 2122 539 |
| 22-01-51 | DOME, Wheel Cover, PC3-300 | 8 | - | - | - | 60 | 4 | 1829 639 |
| 22-01-53 | RETAINER, Wheel Cover Name Plate and Medallion, PY1-H | 8 | - | - | - | 60 | 4 | 2122 543 |

## 22-03-0 HUB AND BRAKE DRUM

| | | | | | | | | |
|---|---|---|---|---|---|---|---|---|
| 22-03-1 | HUB and DRUM, Front Right, 11" x 2" Brakes, except Sub. | 6-8 | 60 | - | - | - | 1 | *2200 130 |
| | Left, 11" x 2" Brakes, except Sub. | 6-8 | 60 | - | - | - | 1 | *2200 131 |
| | Right, 11" x 2" Brakes, PD3, PD4, except Sub. | 6-8 | - | 60 | - | - | 1 | *2122 206 |
| | Left, 11" x 2" Brakes, PD3, PD4, except Sub. | 6-8 | - | 60 | - | - | 1 | *2122 207 |
| | Right, 11" x 2 1/2" Brakes, PP1, PP2, Sub., except Cal. Blt., PD3, PD4, Sub., PD1, PD2, PD3, Taxi, PD4 Taxi | 6-8 | 60 | 60 | - | - | 1 | 2200 132 |
| | Left, 11" x 2 1/2" Brakes, PP1, PP2, Sub., except Cal. Blt., PD3, PD4, Sub., PD1, PD2, PD3 Taxi, PD4 Taxi | 6-8 | 60 | 60 | - | - | 1 | 2200 133 |

★ Indicates use as required. Numerals in parentheses ( ) refer to notes. Printed in U.S.A.
⊟ Indicates parts not listed in any previous parts book. Prices and specifications subject to change without notice.
* Indicates change or addition.



Dec. 9, 1960 Supersedes April 20, 1960.

MyMopar.com

| CODE | PART NAME AND DESCRIPTION | NO. OF CYL. | PLYMOUTH | DODGE | DESOTO | CHRYSLER AND IMPERIAL | PER CAR | PART NUMBER |
|---|---|---|---|---|---|---|---|---|
| **22-03-0** | **HUB AND BRAKE DRUM - Cont'd** | | | | | | | |
| 22-03-1 | HUB and DRUM - Cont'd | | | | | | | |
| | Right, 11" x 2 1/2" brake, PP1, PP2, Sub., Cal. Blt. | 6-8 | 60 | - | - | - | 1 | 1948 112 |
| | Left, 11" x 2 1/2" Brake, PP1, PP2, Sub., Cal. Blt. | 6-8 | 60 | - | - | - | 1 | 1948 113 |
| | Right, 11" x 2 1/2" Brake, PD3-L, PD4, Sub., PD1, PD2, PD4-D500, PC1 except Sub. | 6-8 | - | 60 | 60 | 60 | 1 | 1948 112 |
| | Left, 11" x 2 1/2" Brake, PD3-L, PD4, Sub., PD1, PD2, PD4-D500, PC1 except Sub. | 6-8 | - | 60 | 60 | 60 | 1 | 1948 113 |
| | Right, 12" x 2 1/2" Brake, PC1, PC2, PC3 | 6-8 | 60 | 60 | 60 | 60 | 1 | 2084 798 |
| | Left, 12" x 2 1/2" Brake, PC1, PC2, PC3 | 6-8 | 60 | 60 | 60 | 60 | 1 | 2084 799 |
| | Right, 12" x 2 1/2" Brake, PY1 | 8 | - | - | - | 60 | 1 | 1732 294 |
| | Left, 12" x 2 1/2" Brake, PY1 | 8 | - | - | - | 60 | 1 | 1732 295 |
| 22-03-2 | HUB and DRUM, Rear Right, 11" x 2" Brake | 6-8 | 60 | - | - | - | 1 | 2200 134 |
| | Left, 11" x 2" Brake | 6-8 | 60 | - | - | - | 1 | 2200 135 |
| | Right, 11" x 2" Brake, PD3, PD4, except Det. Blt. | 6-8 | - | 60 | - | - | 1 | 2200 134 |
| | Left, 11" x 2" Brake, PD3, PD4, except Det. Blt. | 6-8 | - | 60 | - | - | 1 | 2200 135 |
| | Right, 11" x 2" Brake, PD3, PD4, Det. Blt. | 6-8 | - | 60 | - | - | 1 | 1734 162 |
| | Left, 11" x 2" Brake, PD3, PD4, Det. Blt. | 6-8 | - | 60 | - | - | 1 | 1734 163 |
| | Right, 11" x 2 1/2" Brake, PD1, PD2, PD3, Taxi, PD4, PD4-D500, PC1 except Sub. | 6-8 | - | 60 | 60 | 60 | 1 | 1730 826 |
| | Left, 11" x 2 1/2" Brake, PD1, PD2, PD3 Taxi, PD4, PD4-500, PC1 except Sub. | 6-8 | - | 60 | 60 | 60 | 1 | 1730 827 |
| | Right, 12" x 2 1/2" Brake, PC1, PC2, PC3 | 6-8 | 60 | 60 | 60 | 60 | 1 | 1732 512 |
| | Left, 12" x 2 1/2" Brake, PC1, PC2, PC3 | 6-8 | 60 | 60 | 60 | 60 | 1 | 1732 513 |
| | Right, 12" x 2 1/2" Brake, PY1 | 8 | - | - | - | 60 | 1 | 1732 296 |
| | Left, 12" x 2 1/2" Brake, PY1 | 8 | - | - | - | 60 | 1 | 1732 297 |
| **22-04-0** | **WHEEL BRAKE DRUM** | | | | | | | |
| 22-04-11 | SPRING, Dampener w/379 Coils, 35 3/16" lgh. | 6-8 | 60 | 60 | 60 | 60 | ★ | 1142 258 |
| | w/344 Coils, 32" lgh. | 6-8 | 60 | 60 | 60 | 60 | ★ | 1142 259 |
| **22-05-0** | **WHEEL HUB** | | | | | | | |
| 22-05-14 | STUD, 11" Brakes, Right, Front and Rear except Sub., Std. | 6-8 | 60 | - | - | - | 10 | 679 118 |
| | Left | 6-8 | 60 | - | - | - | 10 | 679 119 |
| | .030 O/S, Right, Front and Rear, except Sub. | 6-8 | 60 | - | - | - | 10 | 687 901 |
| | Left | 6-8 | 60 | - | - | - | 10 | 687 902 |
| | Right, Front, Sub., Std. | 6-8 | 60 | - | - | - | 5 | 1948 116 |
| | Left | 6-8 | 60 | - | - | - | 5 | 1948 117 |
| | Right, Rear, Sub., Std. | 6-8 | 60 | - | - | - | 5 | 679 118 |
| | Left | 6-8 | 60 | - | - | - | 5 | 679 119 |
| | Right, Rear, Sub., .030 O/S | 6-8 | 60 | - | - | - | 5 | 687 901 |
| | Left | 6-8 | 60 | - | - | - | 5 | 687 902 |
| | Right, Front, PC1 except Sub., Std. | 6-8 | - | 60 | 60 | 60 | 5 | 1948 116 |
| | Left | 6-8 | - | 60 | 60 | 60 | 5 | 1948 117 |
| | Right, Rear, PC1 except Sub., Std. | 6-8 | - | 60 | 60 | 60 | 5 | 679 118 |
| | Left | 6-8 | - | 60 | 60 | 60 | 5 | 679 119 |
| | Right, Rear, PC1 except Sub., .030 O/S | 6-8 | - | 60 | 60 | 60 | 5 | 687 901 |
| | Left | 6-8 | - | 60 | 60 | 60 | 5 | 687 902 |
| | Right, Front and Rear, PC1 Sub., Std. | 8 | - | - | - | 60 | 10 | 679 118 |
| | Left | 8 | - | - | - | 60 | 10 | 679 119 |
| | Right, Front and Rear, PC1 Sub., .030 O/S | 8 | - | - | - | 60 | 10 | 687 901 |
| | Left | 8 | - | - | - | 60 | 10 | 687 902 |
| | Right, Front, Sub., .030 O/S | 6-8 | 60 | - | - | - | 5 | 2122 208 |
| | Left | 6-8 | 60 | - | - | - | 5 | 2122 209 |
| | Right, Front, PC1 except Sub., .030 O/S | 6-8 | - | 60 | 60 | 60 | 5 | 2122 208 |
| | Left | 6-8 | - | 60 | 60 | 60 | 5 | 2122 209 |



MyMopar.com

| CODE | PART NAME AND DESCRIPTION | NO. OF CYL. | PLYMOUTH | DODGE | DESOTO | CHRYSLER AND IMPERIAL | PER CAR | PART NUMBER |
|---|---|---|---|---|---|---|---|---|
| **22-05-0** | **WHEEL HUB - Cont'd** | | | | | | | |
| 22-05-14 | STUD - Cont'd | | | | | | | |
| | 12" Brakes, Right, Front and Rear, PC1 Sub., PC2, PC3 | 6-8 | 60 | 60 | 60 | 60 | 10 | 1633 050 |
| | Left | 6-8 | 60 | 60 | 60 | 60 | 10 | 1633 051 |
| | Right, Front and Rear, PY1 | 8 | - | - | - | 60 | 10 | 1633 052 |
| | Left | 8 | - | - | - | 60 | 10 | 1633 053 |
| 22-05-24 | NUT, Right, PC1, PC2, PC3 | 6-8 | 60 | 60 | 60 | 60 | 10 | 1139 316 |
| | Left, PC1, PC2, PC3 | 6-8 | 60 | 60 | 60 | 60 | 10 | 1139 317 |
| | Right, PY1 | 8 | - | - | - | 60 | 10 | 1315 697 |
| | Left, PY1 | 8 | - | - | - | 60 | 10 | 1315 698 |
| **22-06-0** | **FRONT WHEEL BEARINGS** | | | | | | | |
| 22-06-1 | CONE and ROLLER, Inner, PC1, PC2, PC3 | 6-8 | 60 | 60 | 60 | 60 | 2 | 1619 701 |
| | Outer, PC1, PC2, PC3 | 6-8 | 60 | 60 | 60 | 60 | 2 | 1619 703 |
| | Inner, PY1 | 8 | - | - | - | 60 | 2 | 1789 755 |
| | Outer, PY1 | 8 | - | - | - | 60 | 2 | 1790 241 |
| 22-06-2 | CUP, Inner, PC1, PC2, PC3 | 6-8 | 60 | 60 | 60 | 60 | 2 | 1619 700 |
| | Outer, PC1, PC2, PC3 | 6-8 | 60 | 60 | 60 | 60 | 2 | 1619 702 |
| | Inner, PY1 | 8 | - | - | - | 60 | 2 | 1789 754 |
| | Outer, PY1 | 8 | - | - | - | 60 | 2 | 1790 244 |
| 22-06-5 | NUT | 6-8 | 60 | 60 | 60 | 60 | 2 | 1732 300 |
| 22-06-10 | LOCK, Bearing Nut | 6-8 | 60 | 60 | 60 | 60 | 2 | 1673 324 |
| 22-06-14 | WASHER | 6-8 | 60 | 60 | 60 | 60 | 2 | 600 194 |
| 22-06-18 | SEAL, Dust, PC1, PC2, PC3 | 6-8 | 60 | 60 | 60 | 60 | 2 | 1613 409 |
| | PY1 | 8 | - | - | - | 60 | 2 | 1671 340 |
| **22-08-0** | **WHEEL HUB CAPS** | | | | | | | |
| 22-08-5 | CAP, Wheel Hub | 6-8 | 60 | - | - | - | 4 | 1943 743 |
| | | 6-8 | - | 60 | - | - | 4 | 1948 163 |
| | **15 inch.** | 6-8 | - | 60 | - | - | 4 | 1637 342 |
| | PS1 | 8 | - | - | 60 | - | 4 | 1732 338 |
| | PC1 | 8 | - | - | - | 60 | 4 | 1736 676 |
| 22-08-57 | CAP, Front Wheel Hub Grease, PC1, PC2, PC3 | 6-8 | 60 | 60 | 60 | 60 | 2 | 1613 416 |
| | PY1 | 8 | - | - | - | 60 | 2 | 1671 341 |
| **22-09-0** | **WHEEL BALANCE WEIGHT** | | | | | | | |
| 22-09-1 | WEIGHT, 1/2 oz. | 6-8 | 60 | 60 | 60 | 60 | ★ | 1615 349 |
| | 1 oz. | 6-8 | 60 | 60 | 60 | 60 | ★ | 1615 350 |
| | 1 1/2 oz. | 6-8 | 60 | 60 | 60 | 60 | ★ | 1615 351 |
| | 2 oz. | 6-8 | 60 | 60 | 60 | 60 | ★ | 1615 352 |
| | 2 1/2 oz. | 6-8 | 60 | 60 | 60 | 60 | ★ | 1615 353 |
| | 3 oz. | 6-8 | 60 | 60 | 60 | 60 | ★ | 1615 354 |
| | NOTE: The following are used with full Wheel Cover and extended Rim Flange. | | | | | | | |
| | WEIGHT, 1/2 oz. | 6-8 | - | 60 | 60 | - | ★ | 1940 813 |
| | 1 oz. | 6-8 | - | 60 | 60 | - | ★ | 1940 814 |
| | 1 1/2 oz. | 6-8 | - | 60 | 60 | - | ★ | 1940 815 |
| | 2 oz. | 6-8 | - | 60 | 60 | - | ★ | 1940 816 |
| | 2 1/2 oz. | 6-8 | - | 60 | 60 | - | ★ | 1940 817 |
| | 3 oz. | 6-8 | - | 60 | 60 | - | ★ | 1940 818 |
| **22-20-0** | **SPARE WHEEL CARRIER** | | | | | | | |
| 22-20-80 | PLATE, Spare Wheel Anchor, PY1 | 8 | - | - | - | 60 | 1 | 1750 747 |
| 22-20-87 | ROD, Spare Wheel Anchor, Sub., 2-Seater | 6-8 | 60 | 60 | - | - | 1 | 1963 237 |
| | Sub., 3-Seater | 6-8 | 60 | 60 | - | 60 | 1 | 1963 236 |
| | Except Cv. Cp. | 6-8 | - | 60 | - | - | 1 | 1963 236 |
| | PY1 | 8 | - | - | - | 60 | 1 | *1963 237 |
| 22-20-89 | NUT, Spare Wheel Anchor Rod Wing | 6-8 | 60 | 60 | 60 | 60 | 1 | 6000 332 |



MyMopar.com

| CODE | PART NAME AND DESCRIPTION | NO. OF CYL. | PLYMOUTH | DODGE | DESOTO | CHRYSLER AND IMPERIAL | PER CAR | PART NUMBER |
|---|---|---|---|---|---|---|---|---|

## NOTES



MyMopar.com

# GROUP 23 - BODY

# INSTRUCTIONS FOR ORDERING TRIM MATERIAL

The following pages contain line drawings of basic interior body trim sketches for use in ordering trim material. These drawings represent the various body styles and should be used in selecting the proper sketch for ordering material.

By placing a piece of tracing paper (or any piece of transparent paper) over the drawing which applies to the body style, it can be easily traced for the section for which the trim is being ordered. The particular design which varies in different vehicles can be drawn in to show the pattern and design. Then label each section with "A", "B", "C", etc. on the sketch and include a small piece of material also labeled to correspond to the sketch - see sample below.

Always furnish vehicle serial number. Also specify "right" or "left" when ordering material requiring this description.

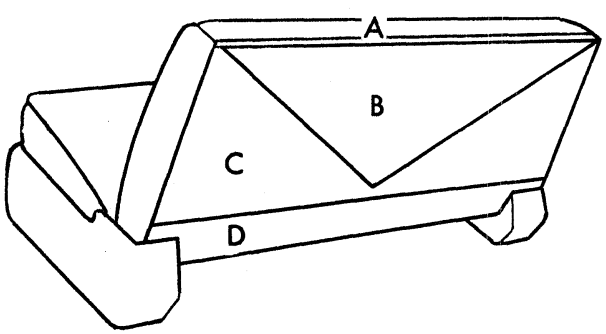


Small pieces of material labeled to correspond to sketch.

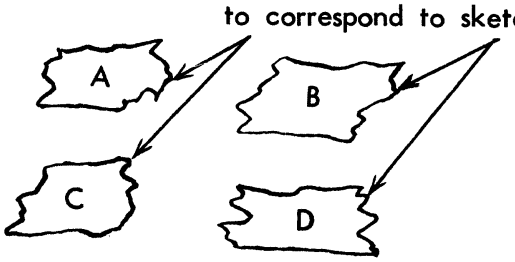


19x6975



MyMopar.com

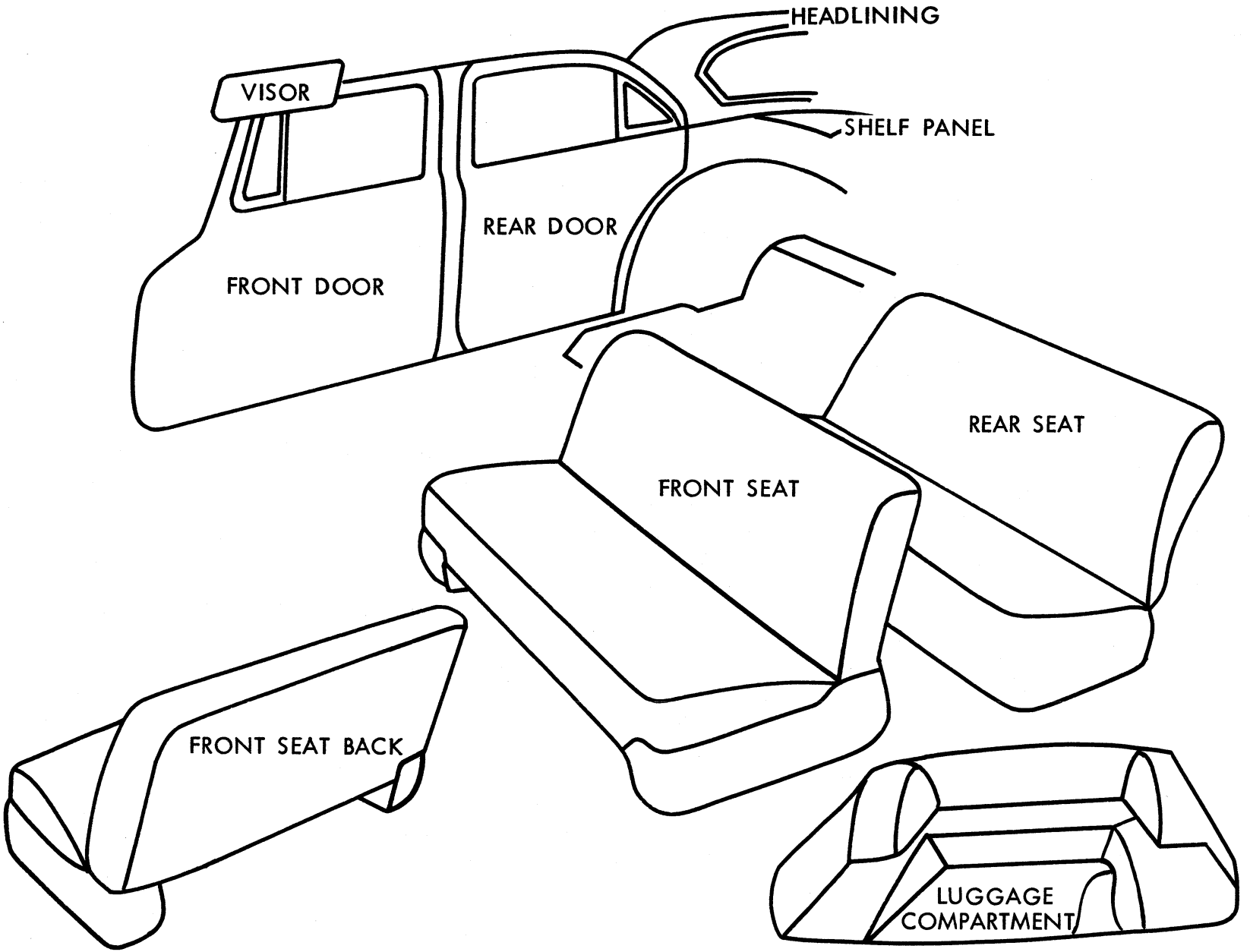


**4 DOOR SEDAN AND SPECIAL 4 DOOR SEDAN** 19x6960

MyMopar.com

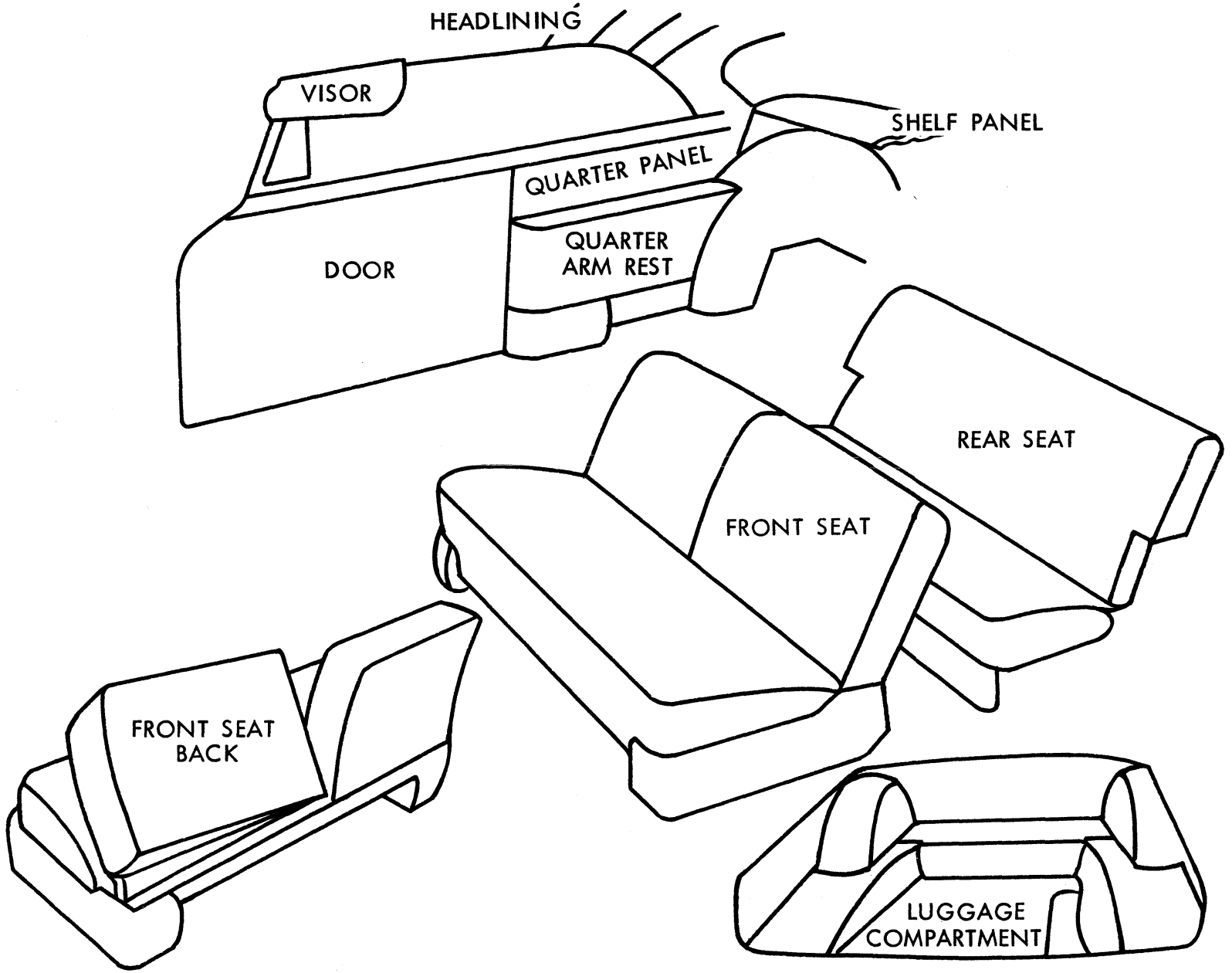


**SPECIAL CLUB COUPE**

19x6962



MyMopar.com

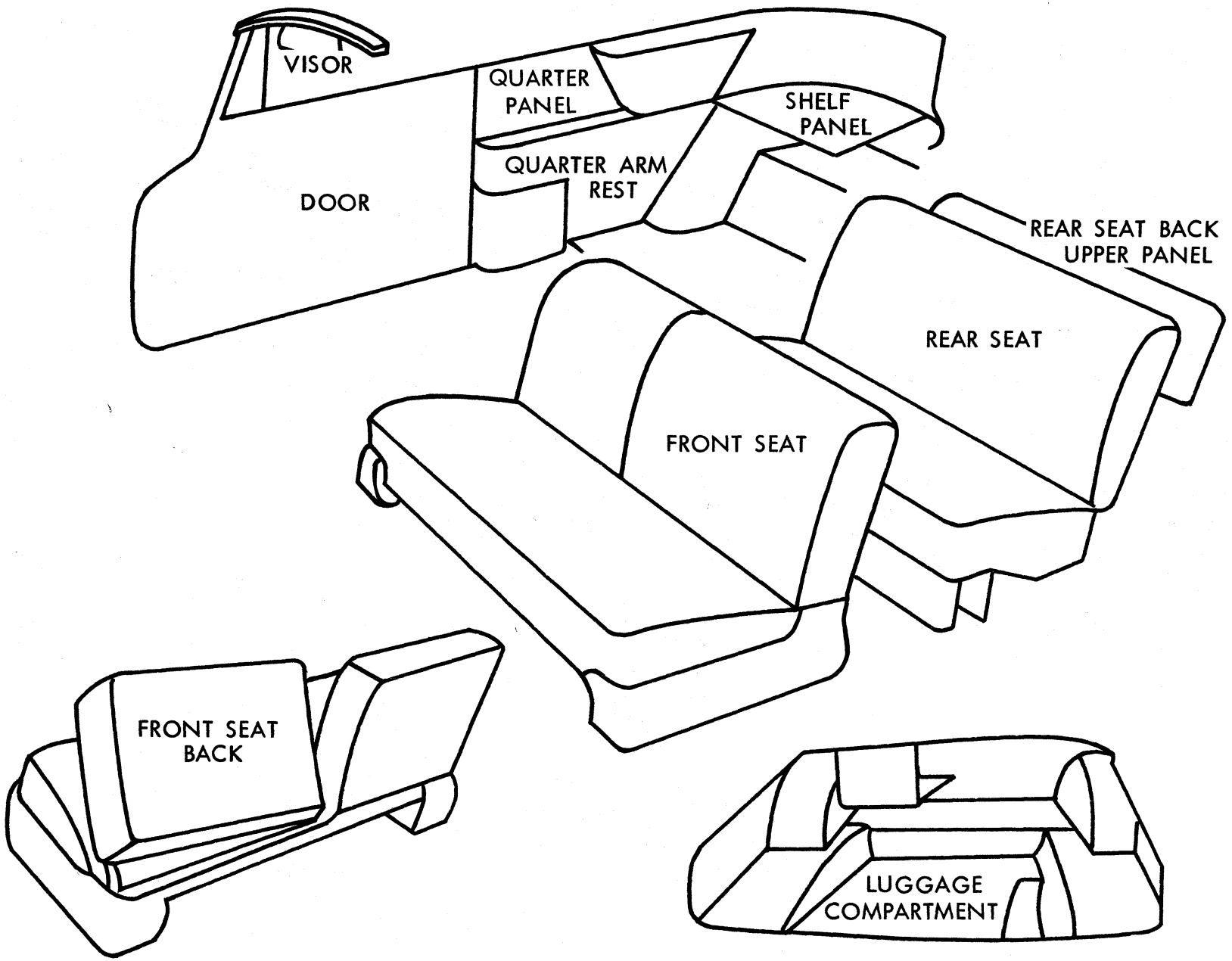


**CONVERTIBLE COUPE**

19x6963

MyMopar.com

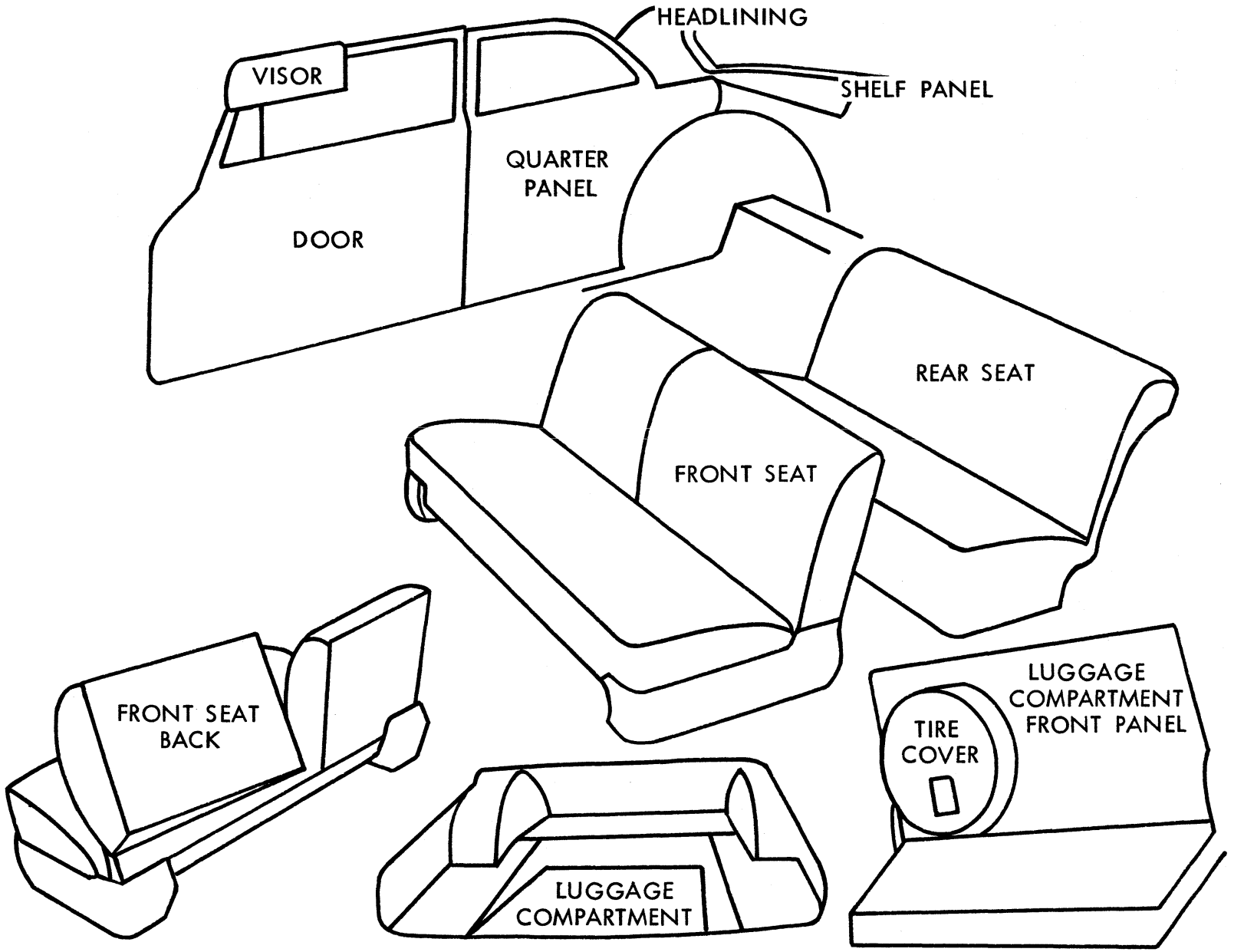


**CLUB SEDAN AND 3 PASSENGER COUPE**

MyMopar.com

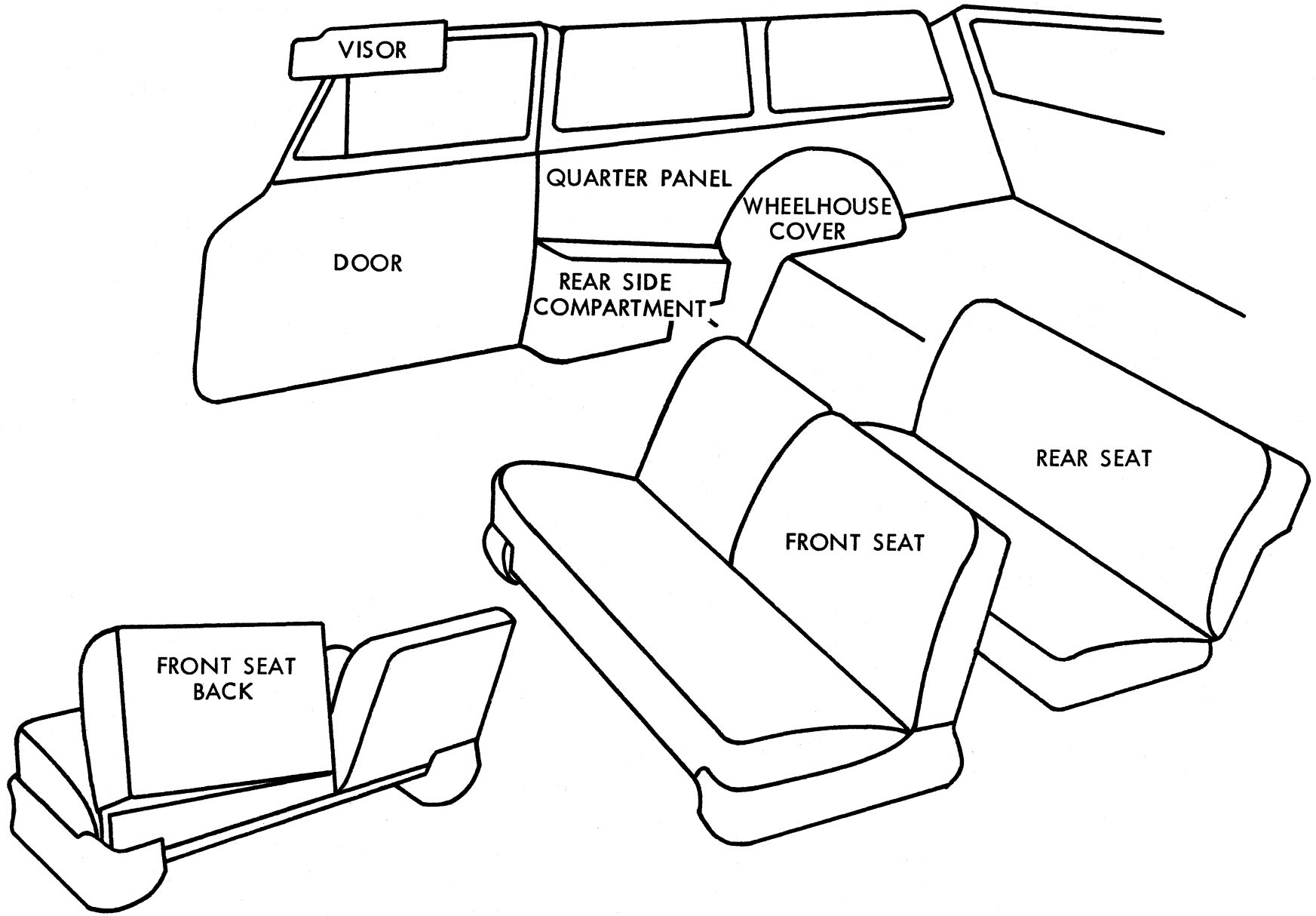


**2 DOOR SUBURBAN**

19x6964

MyMopar.com

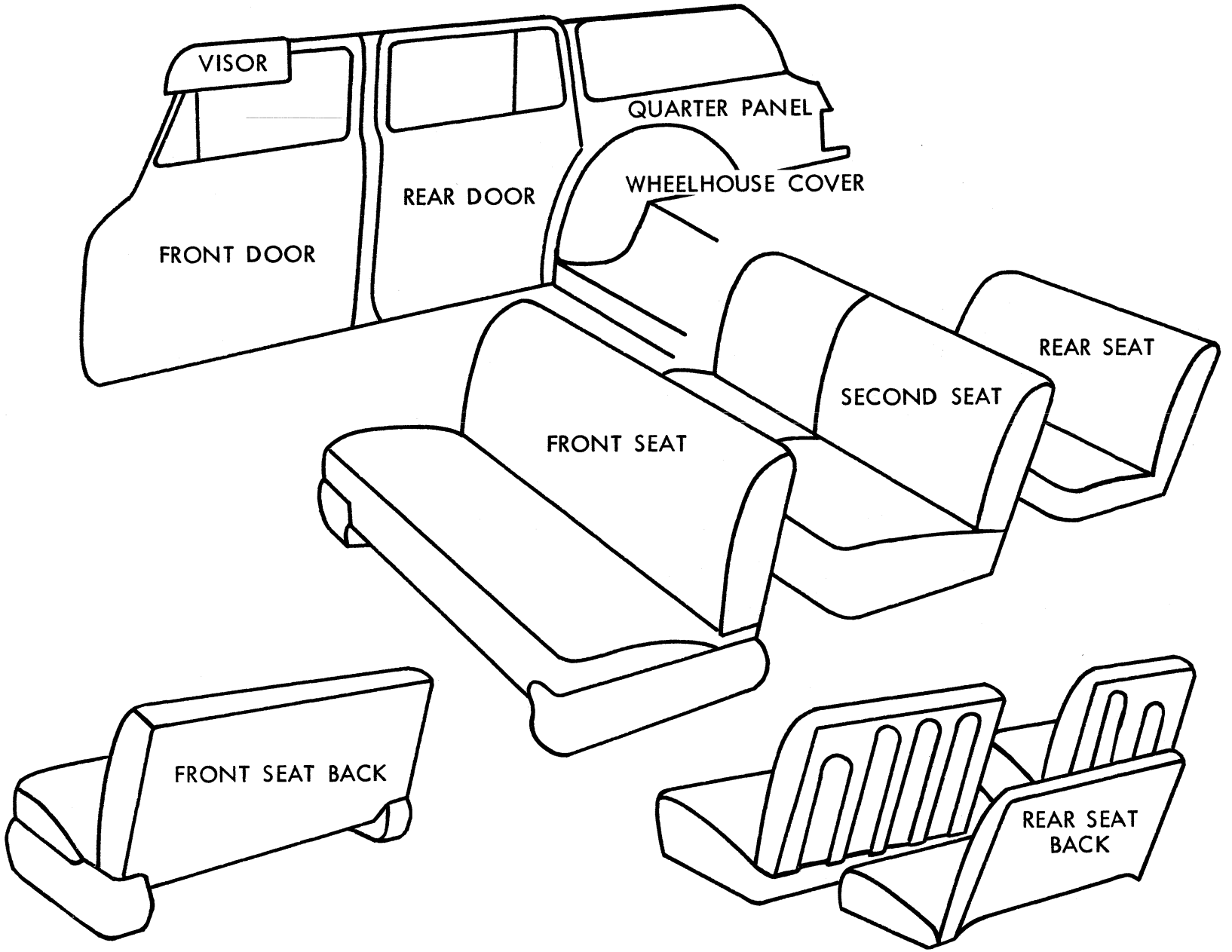


**4 DOOR SUBURBAN**

19x6965

MyMopar.com

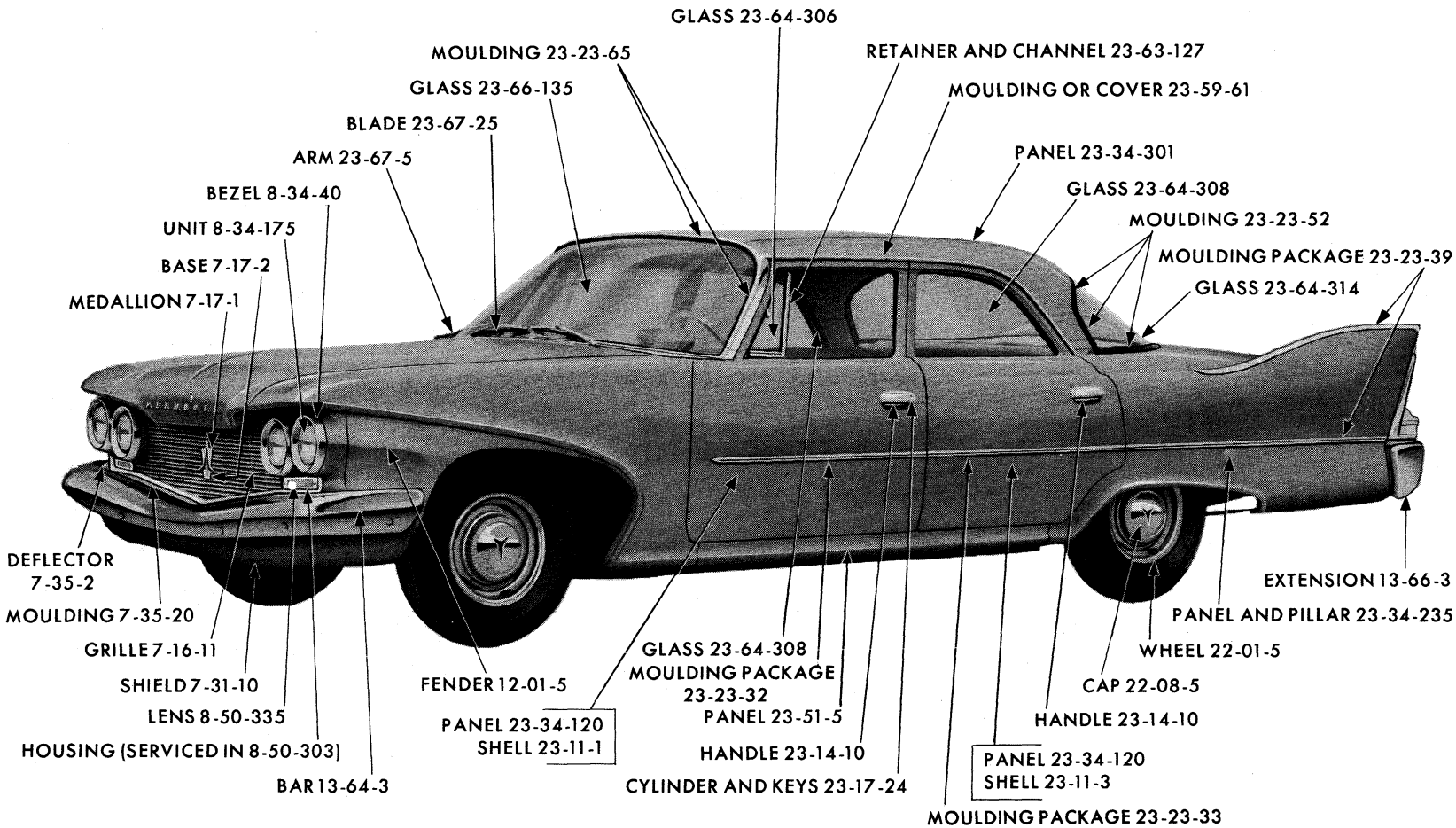


19x8647A

**FRONT EXTERIOR - PLYMOUTH PP1-2 4 DOOR SEDAN**

MyMopar.com

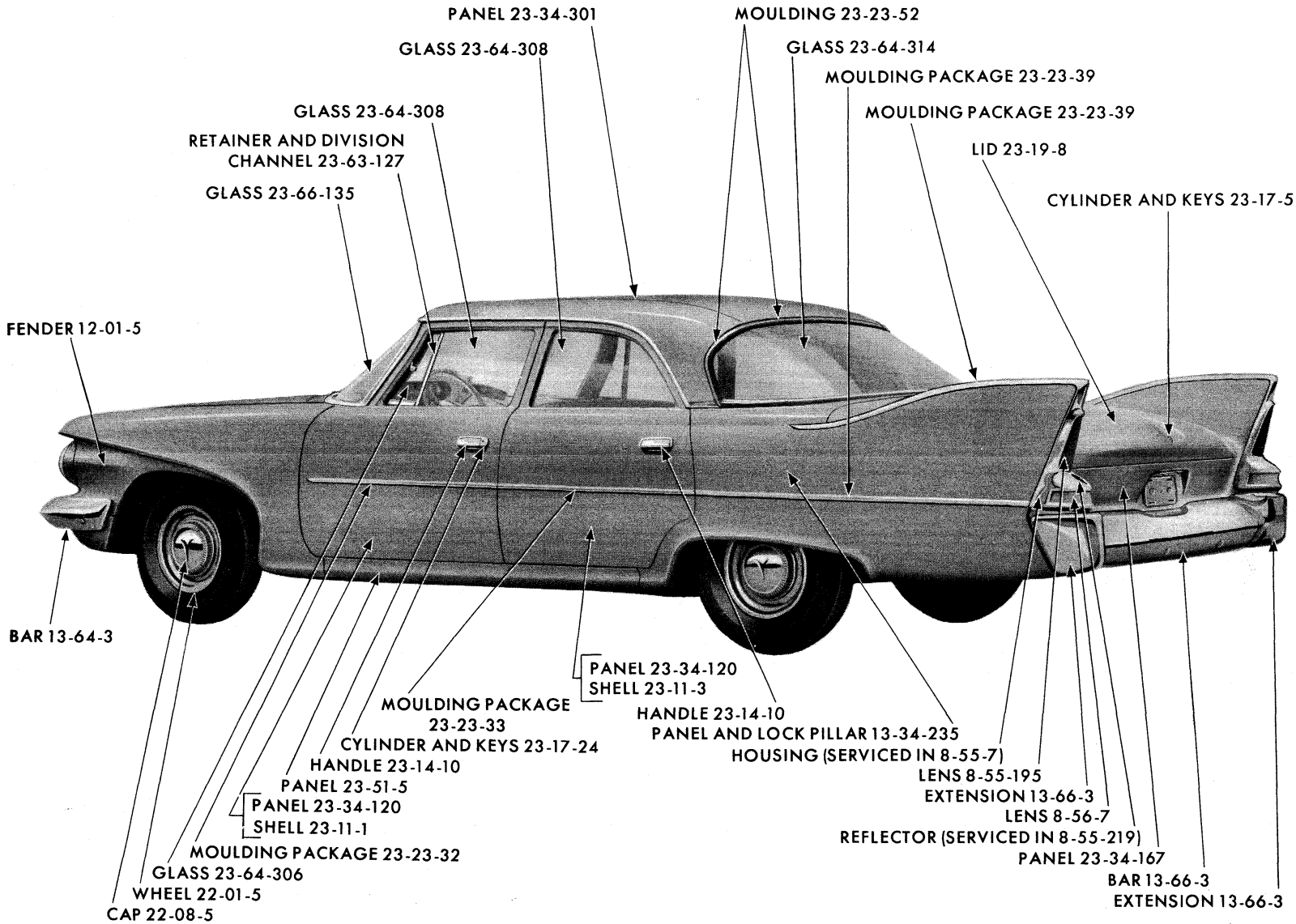


**REAR EXTERIOR - PLYMOUTH PP1-2 4 DOOR SEDAN**

MyMopar.com

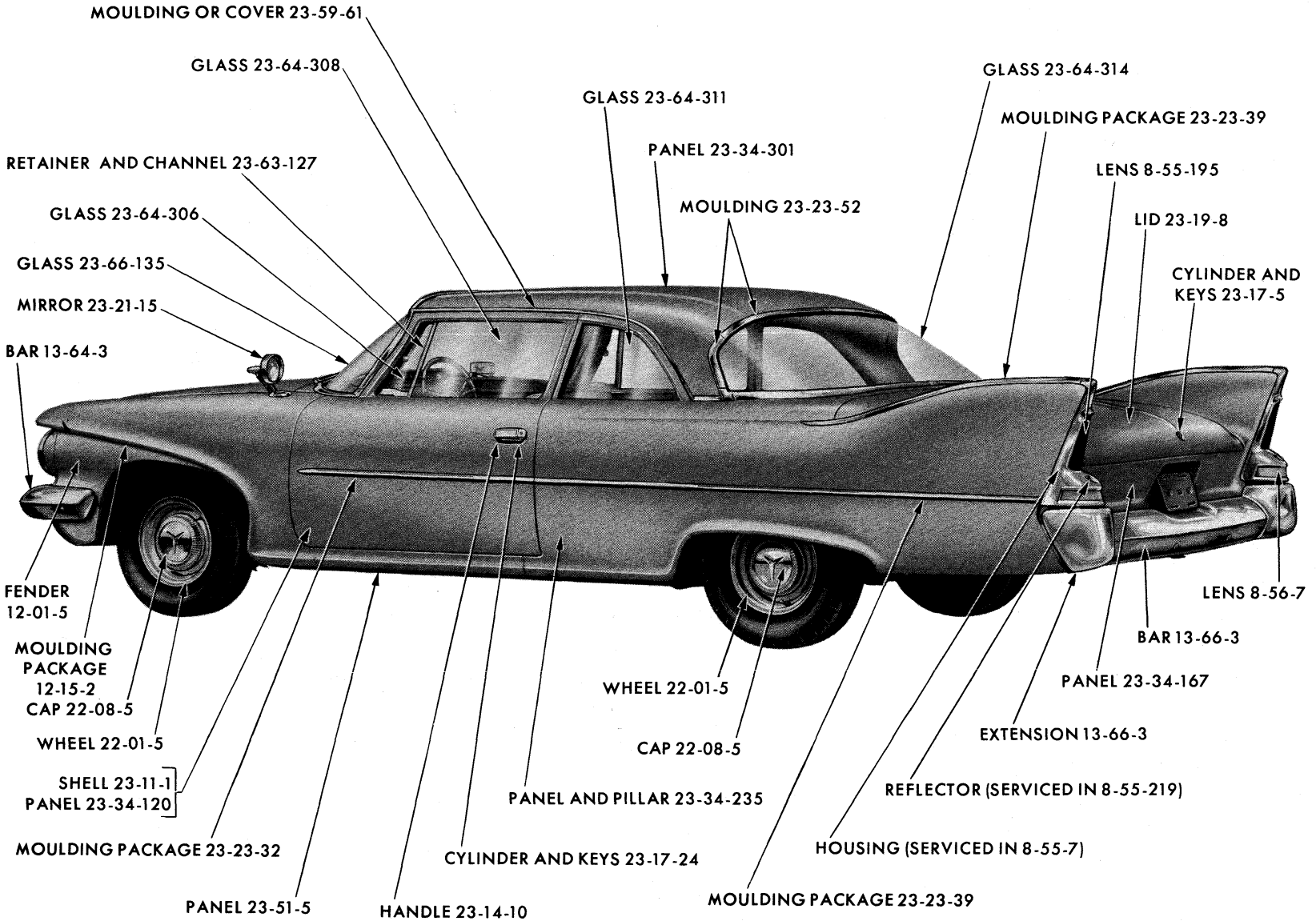


REAR EXTERIOR - PLYMOUTH PP1-2 CLUB SEDAN

MyMopar.com

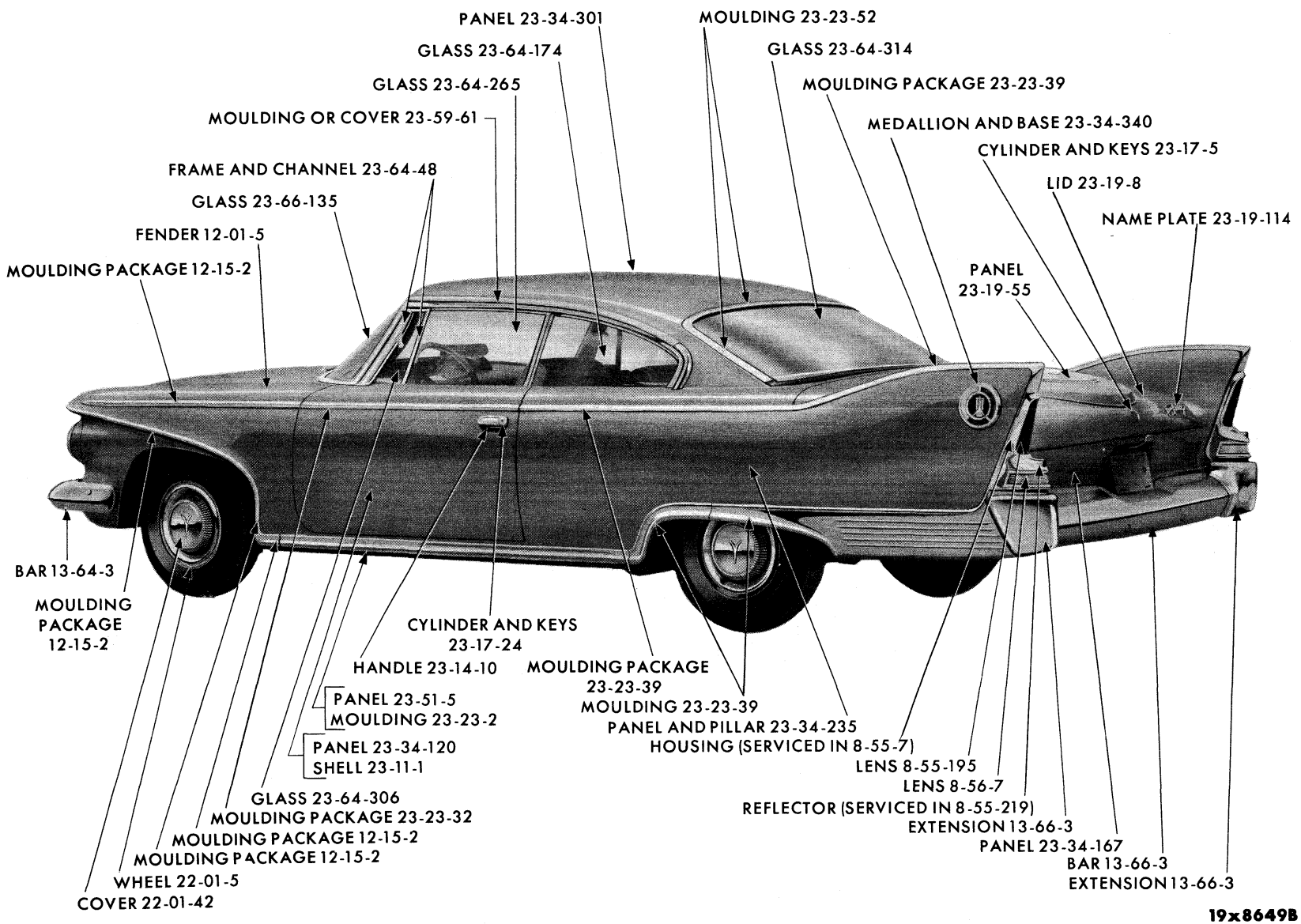


**REAR EXTERIOR - PLYMOUTH PP1-2 SPECIAL CLUB COUPE**

MyMopar.com

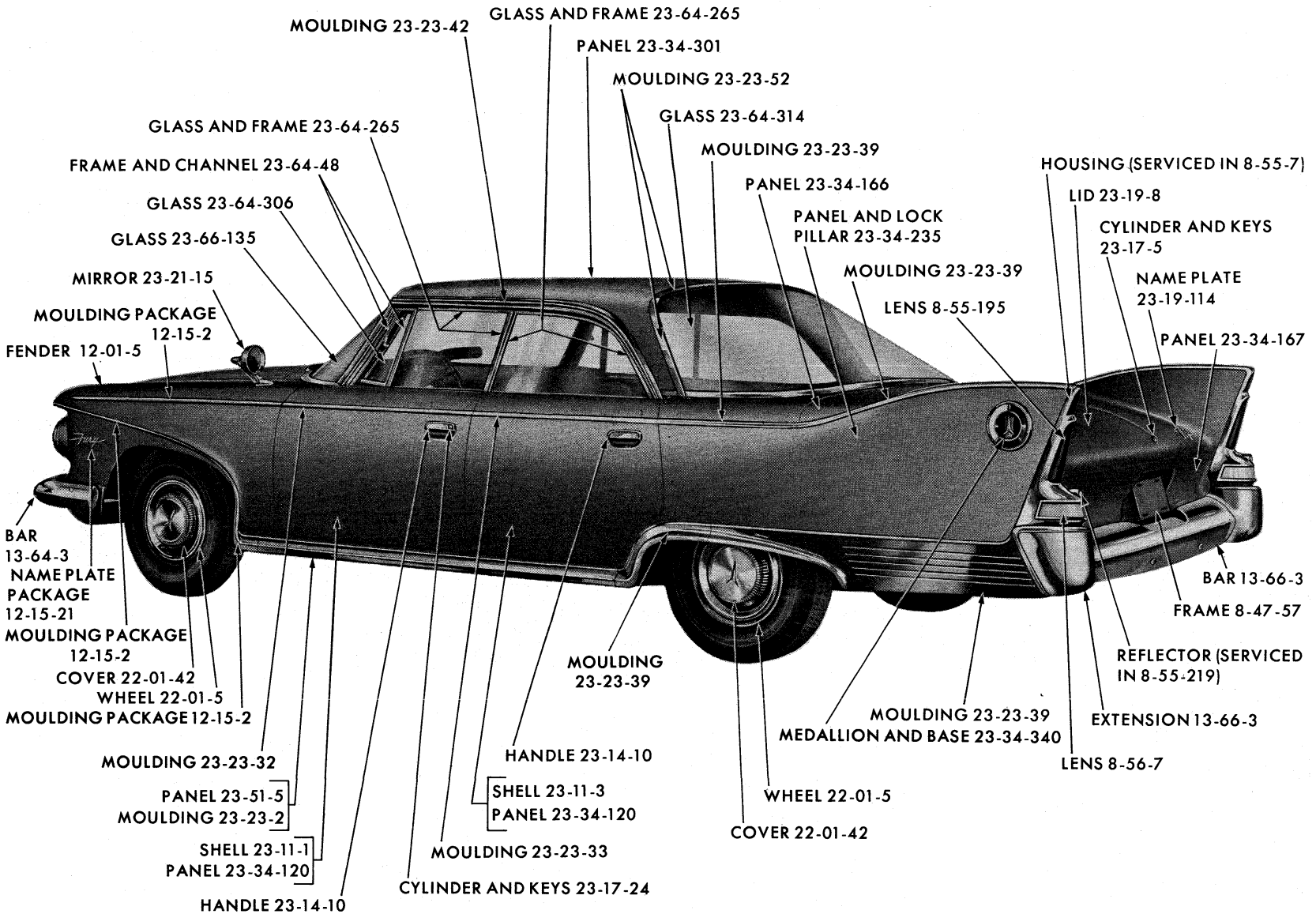


**REAR EXTERIOR - PLYMOUTH PP1-2 SPECIAL 4 DOOR SEDAN**

MyMopar.com

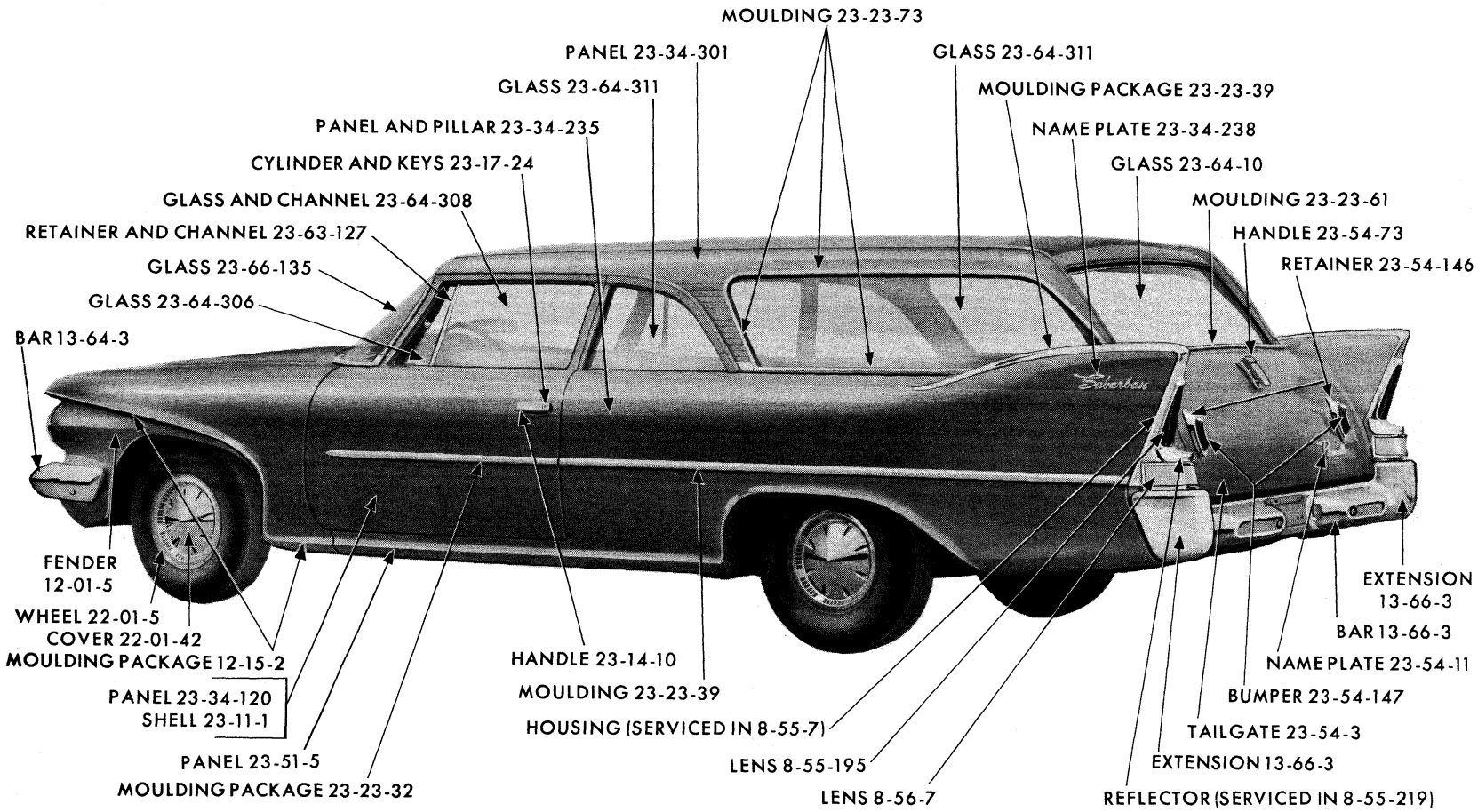


REAR EXTERIOR - PLYMOUTH PP1-2 2 DOOR SUBURBAN

MyMopar.com

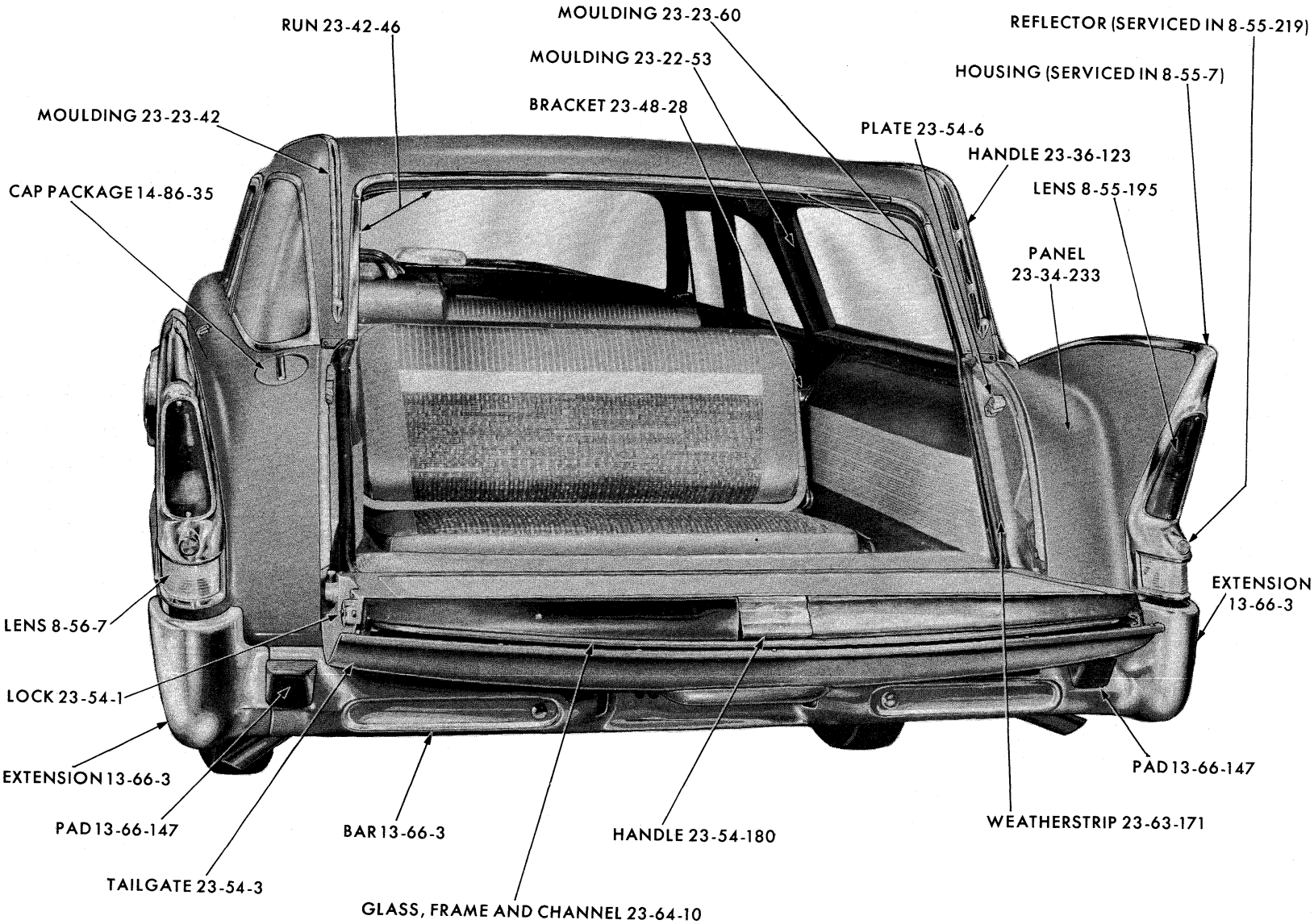


REAR VIEW - PLYMOUTH PP1-2 SUBURBAN

MyMopar.com

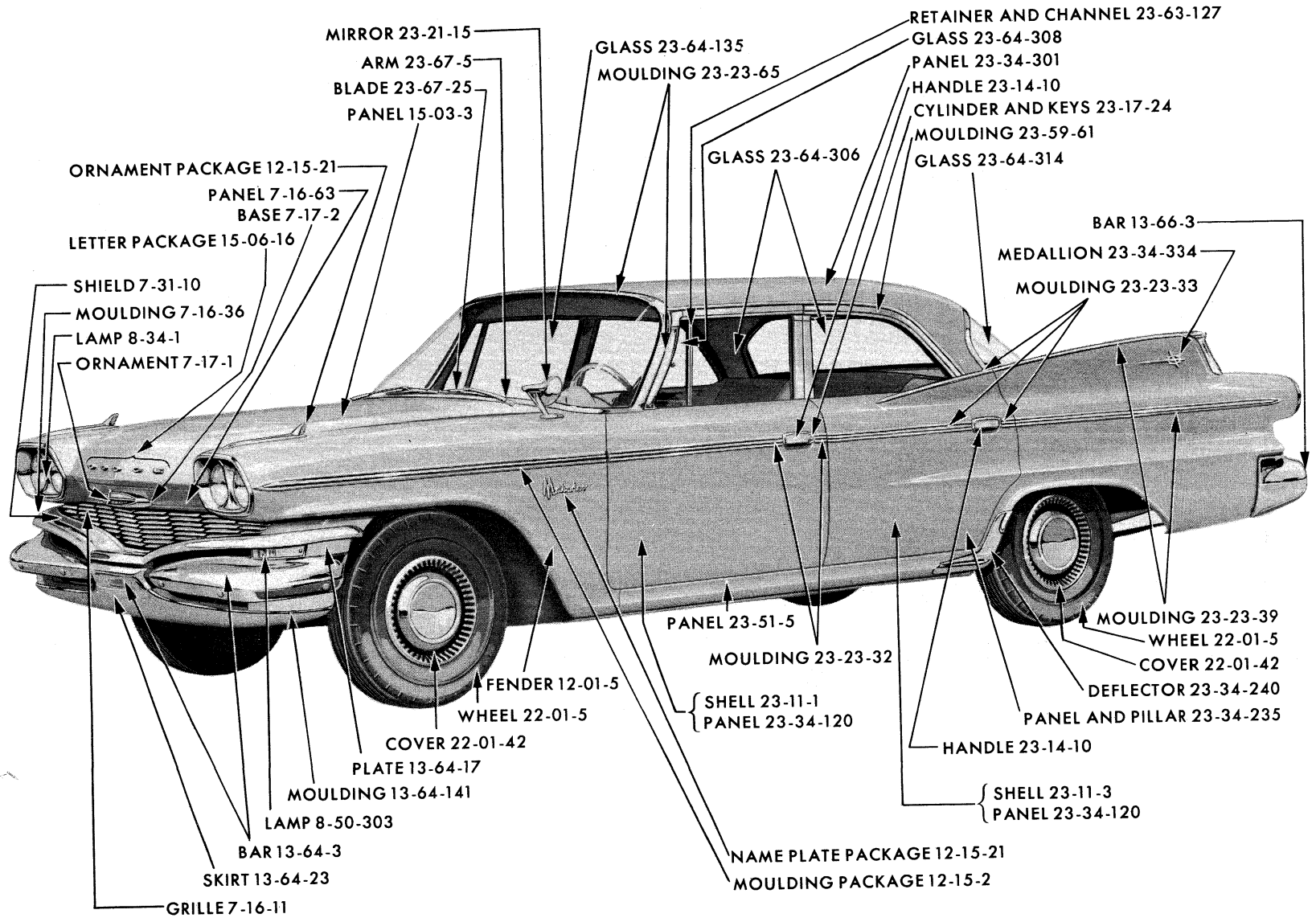


19x8790

FRONT EXTERIOR - DODGE PD1-2 4 DOOR SEDAN

MyMopar.com

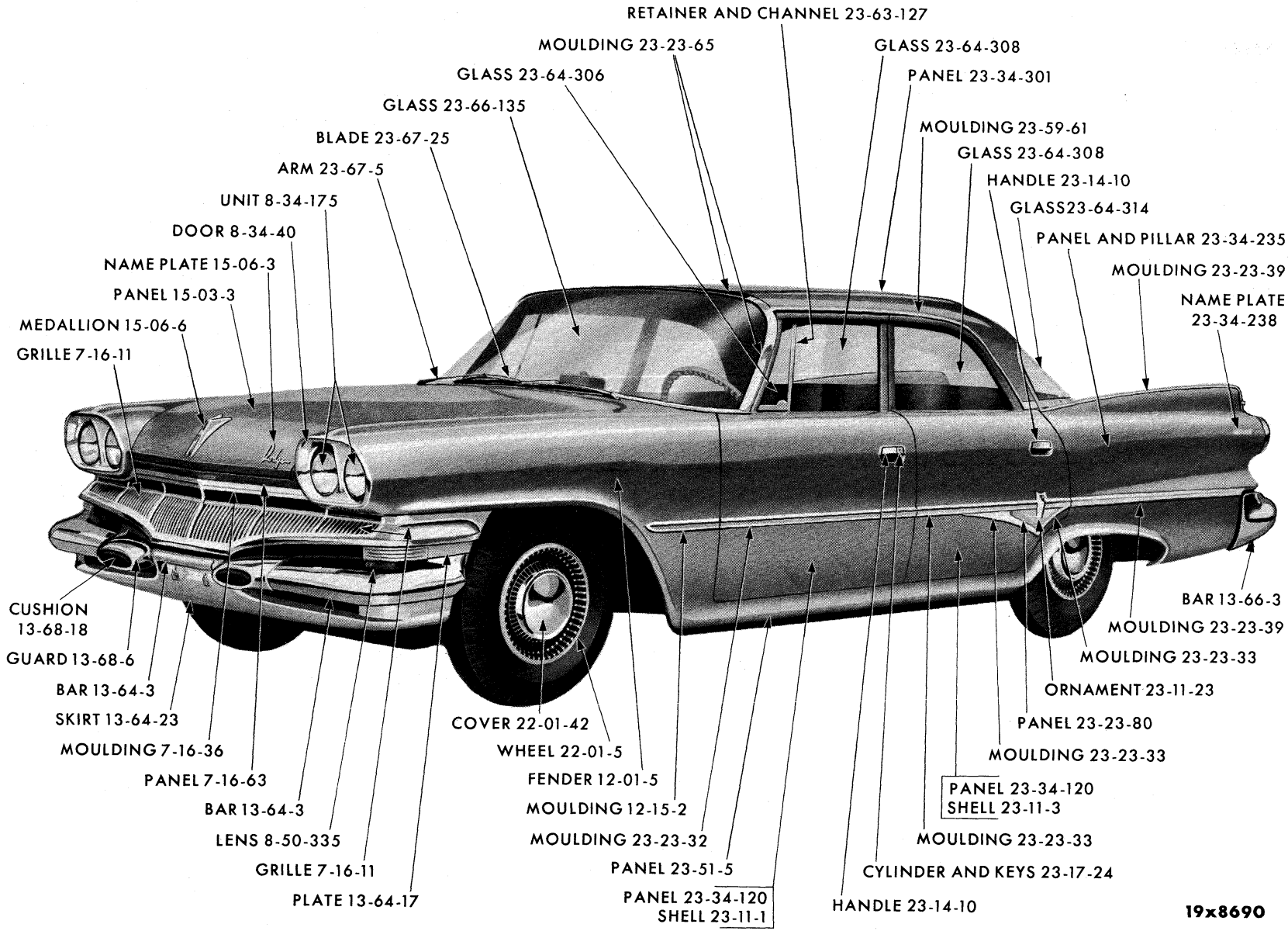


**FRONT EXTERIOR - DODGE PD3-4 4 DOOR SEDAN**

MyMopar.com

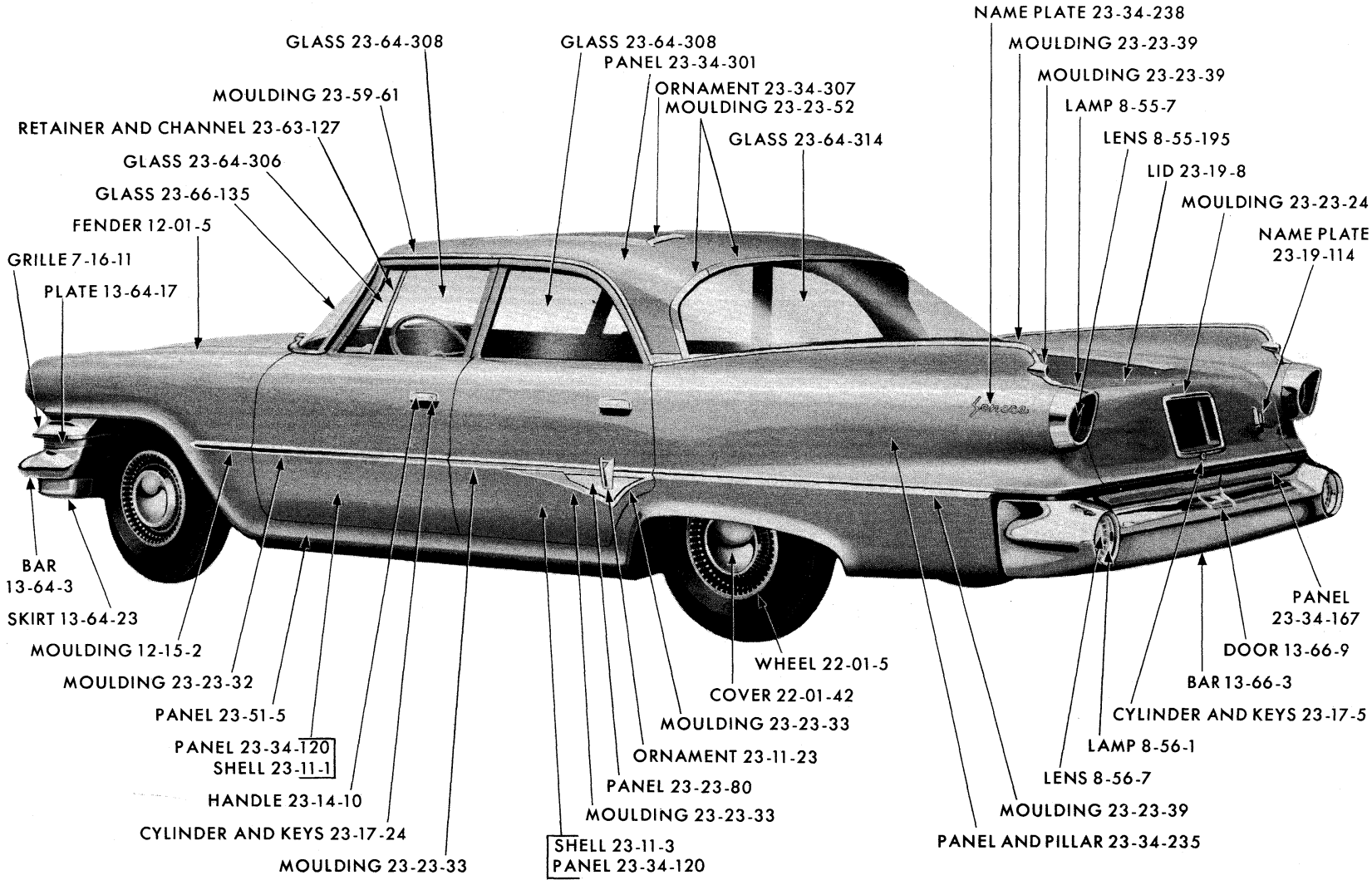


**REAR EXTERIOR - DODGE PD3-4 4 DOOR SEDAN**

MyMopar.com

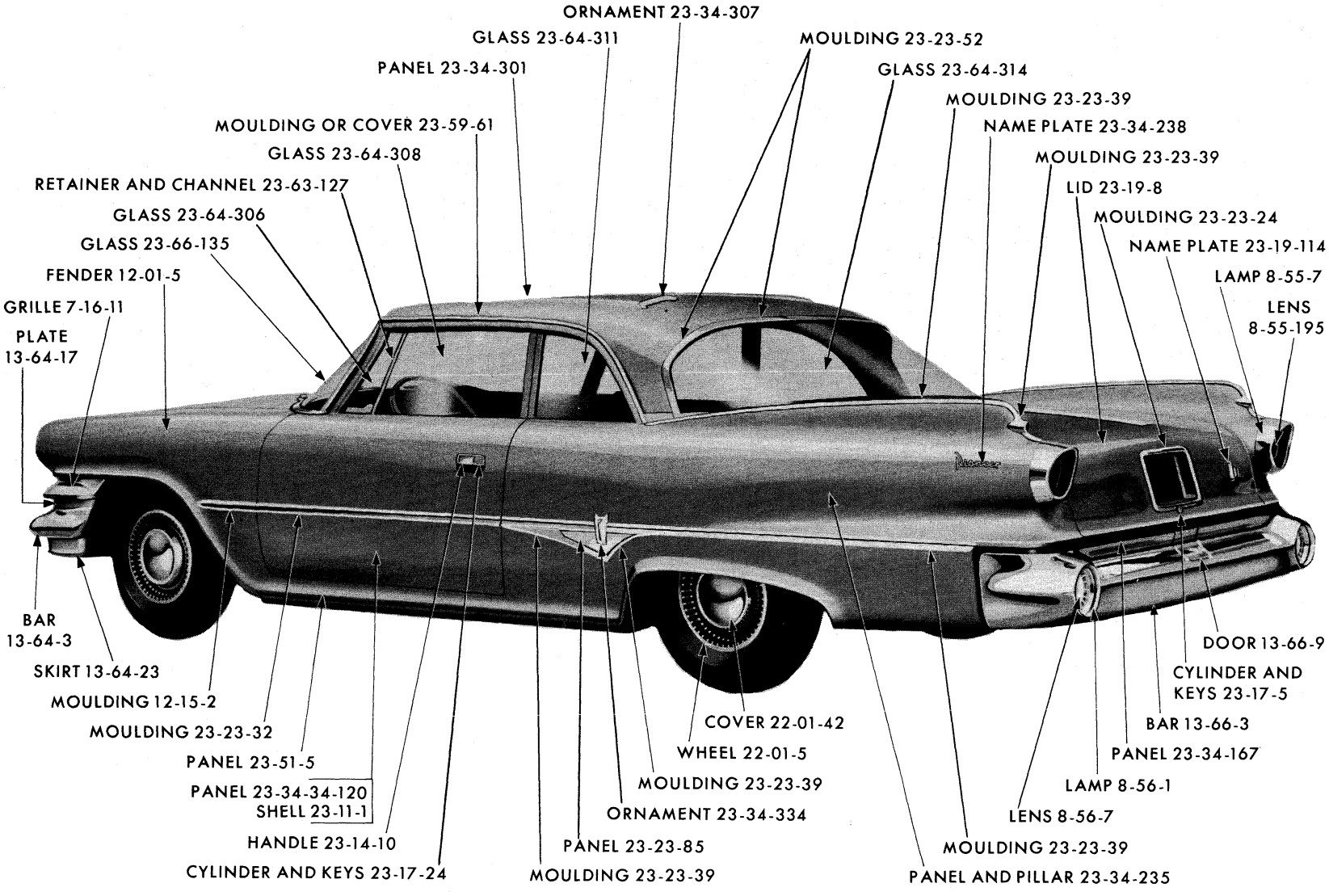


19x8693A

REAR EXTERIOR - DODGE PD3-4 CLUB SEDAN

MyMopar.com

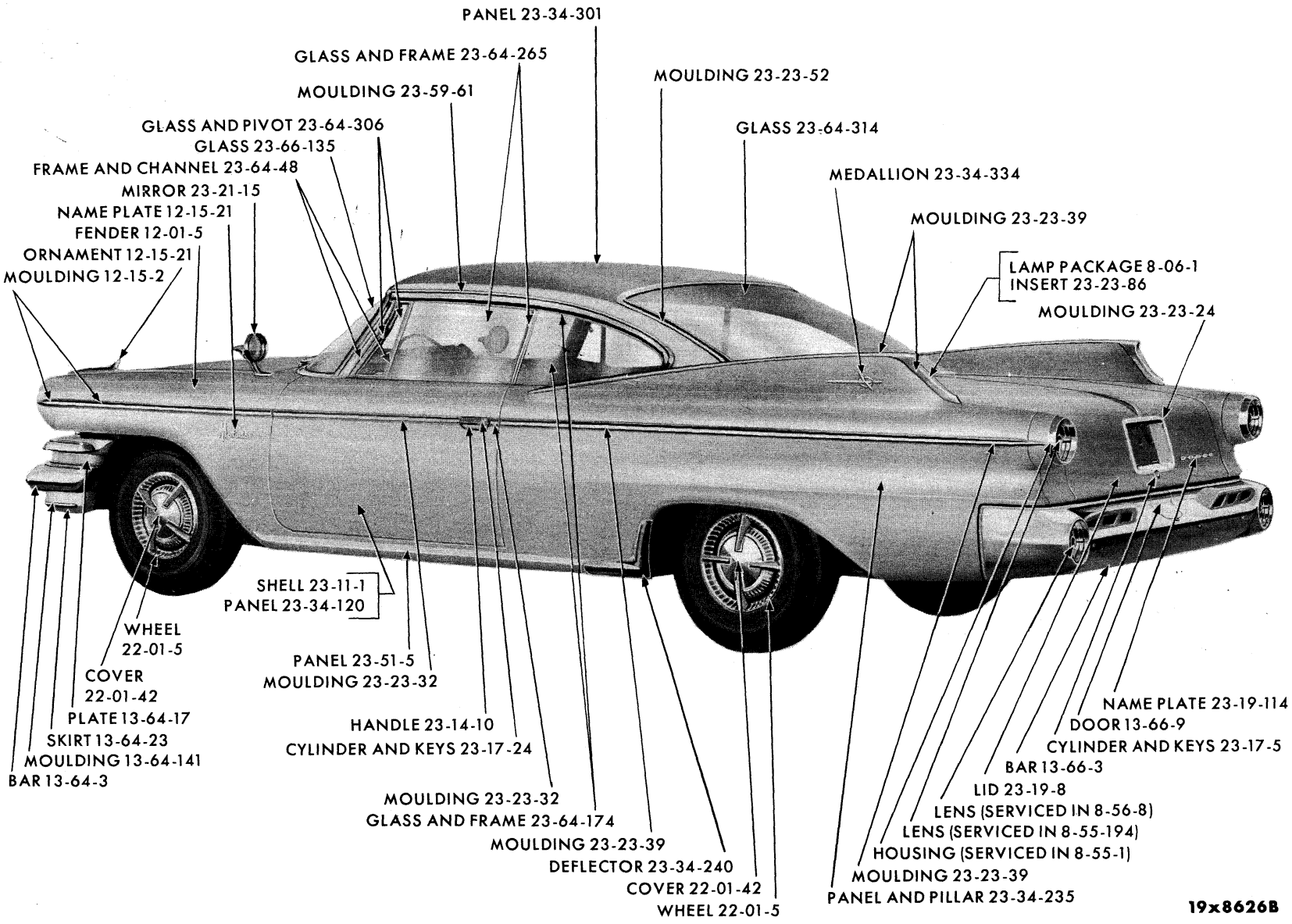


REAR EXTERIOR - DODGE PD1-2 SPECIAL CLUB COUPE

MyMopar.com

Printed in U.S.A.
Page 23-19
Dec. 30, 1959 Supersedes Oct. 1, 1959.

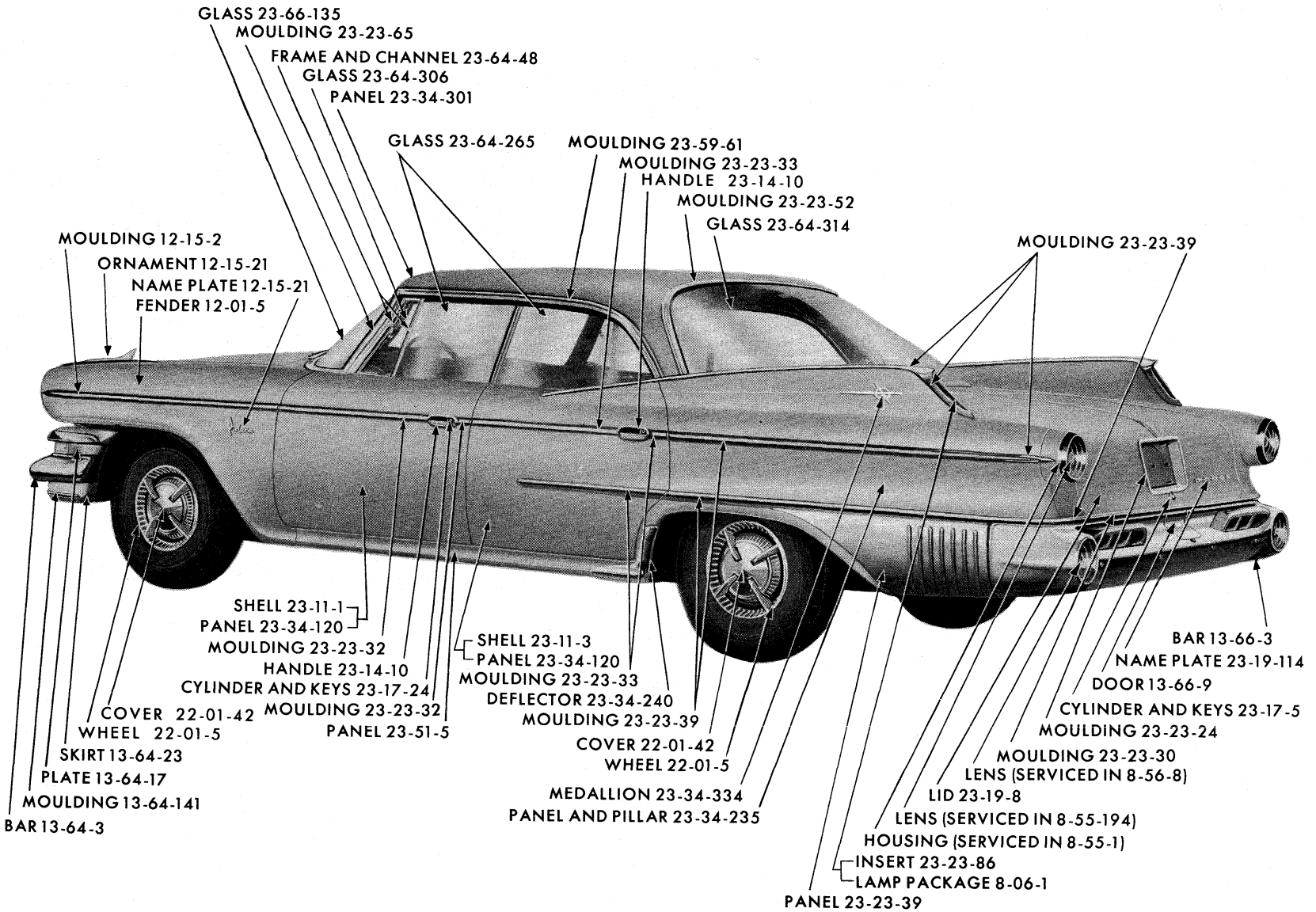


**REAR EXTERIOR - DODGE PD1-2 SPECIAL 4 DOOR SEDAN**

MyMopar.com

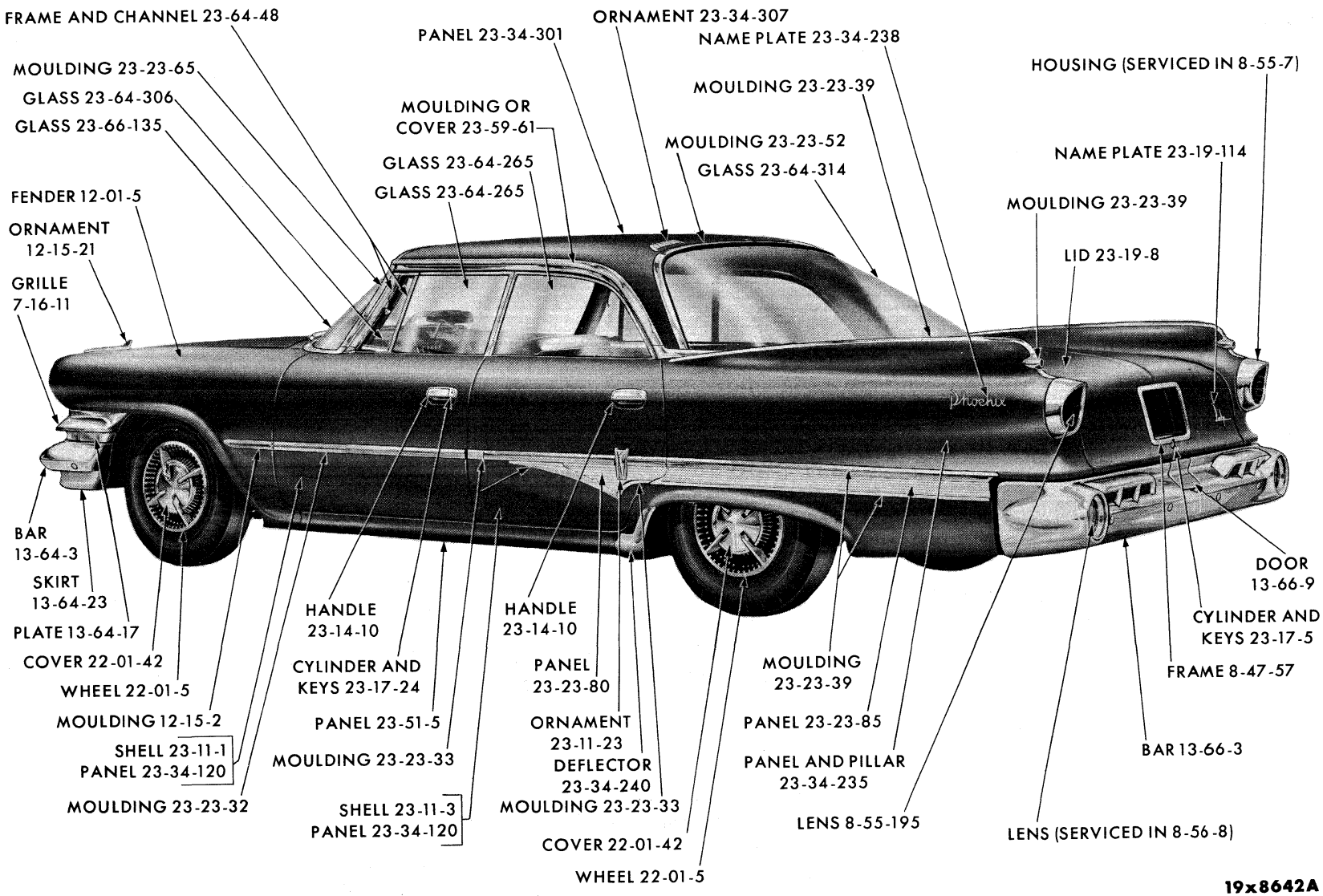


**REAR EXTERIOR - DODGE PDS-4 SPECIAL 4 DOOR SEDAN**

MyMopar.com

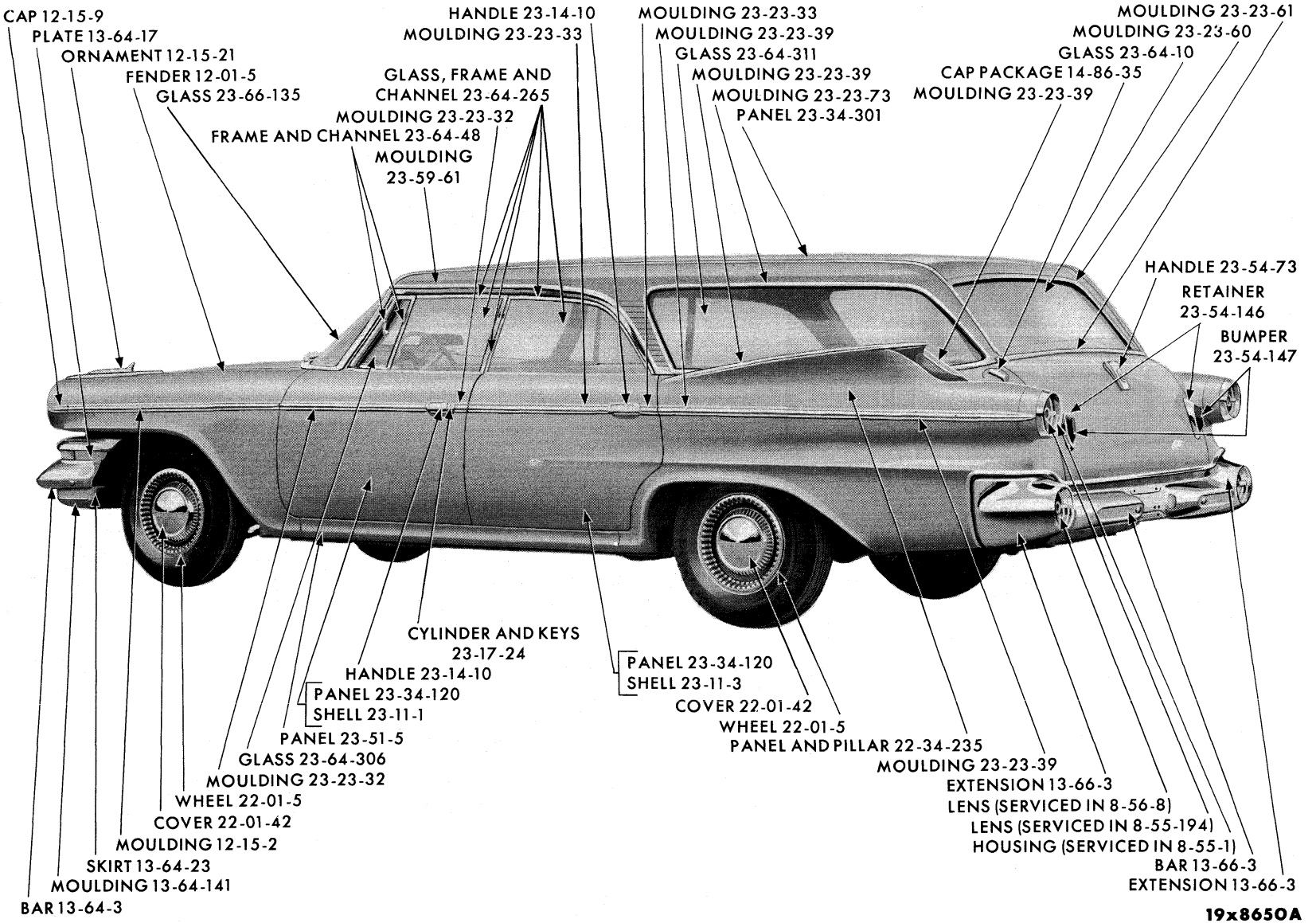


REAR EXTERIOR - DODGE PD1-2 4 DOOR SUBURBAN

MyMopar.com

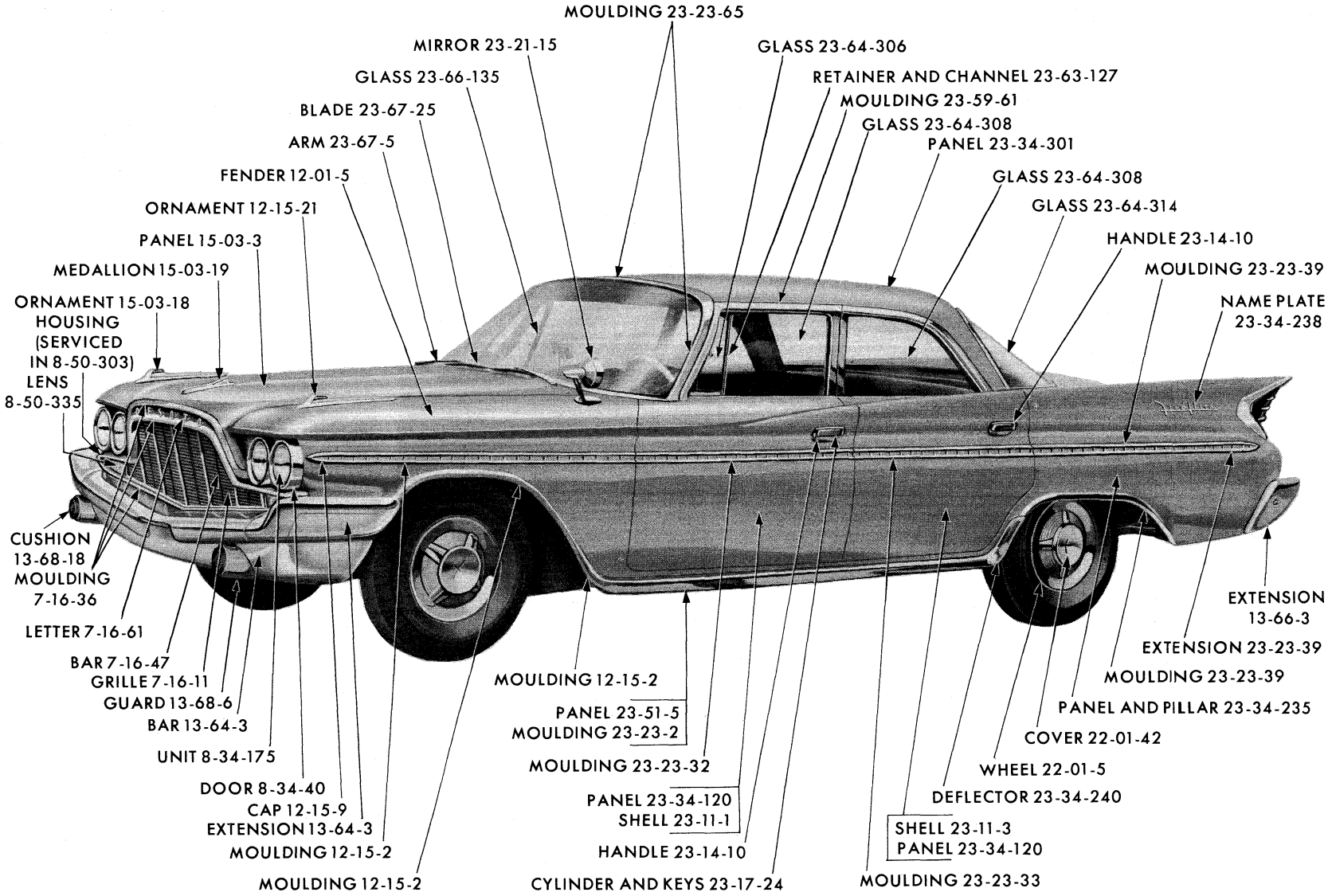


FRONT EXTERIOR - DESOTO PS1-3 4 DOOR SEDAN

MyMopar.com

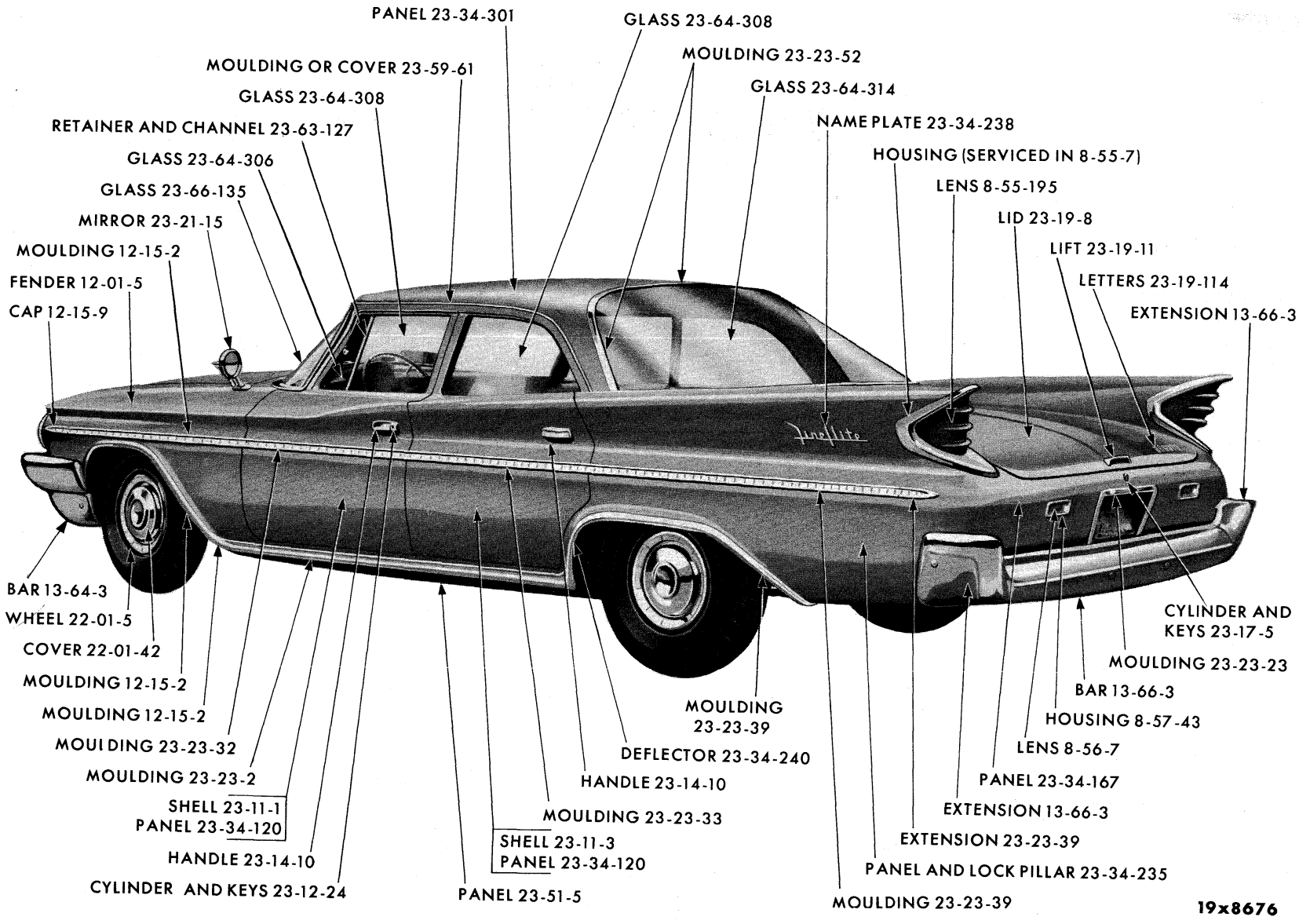


**REAR EXTERIOR - DESOTO PS1-3 4 DOOR SEDAN**

MyMopar.com

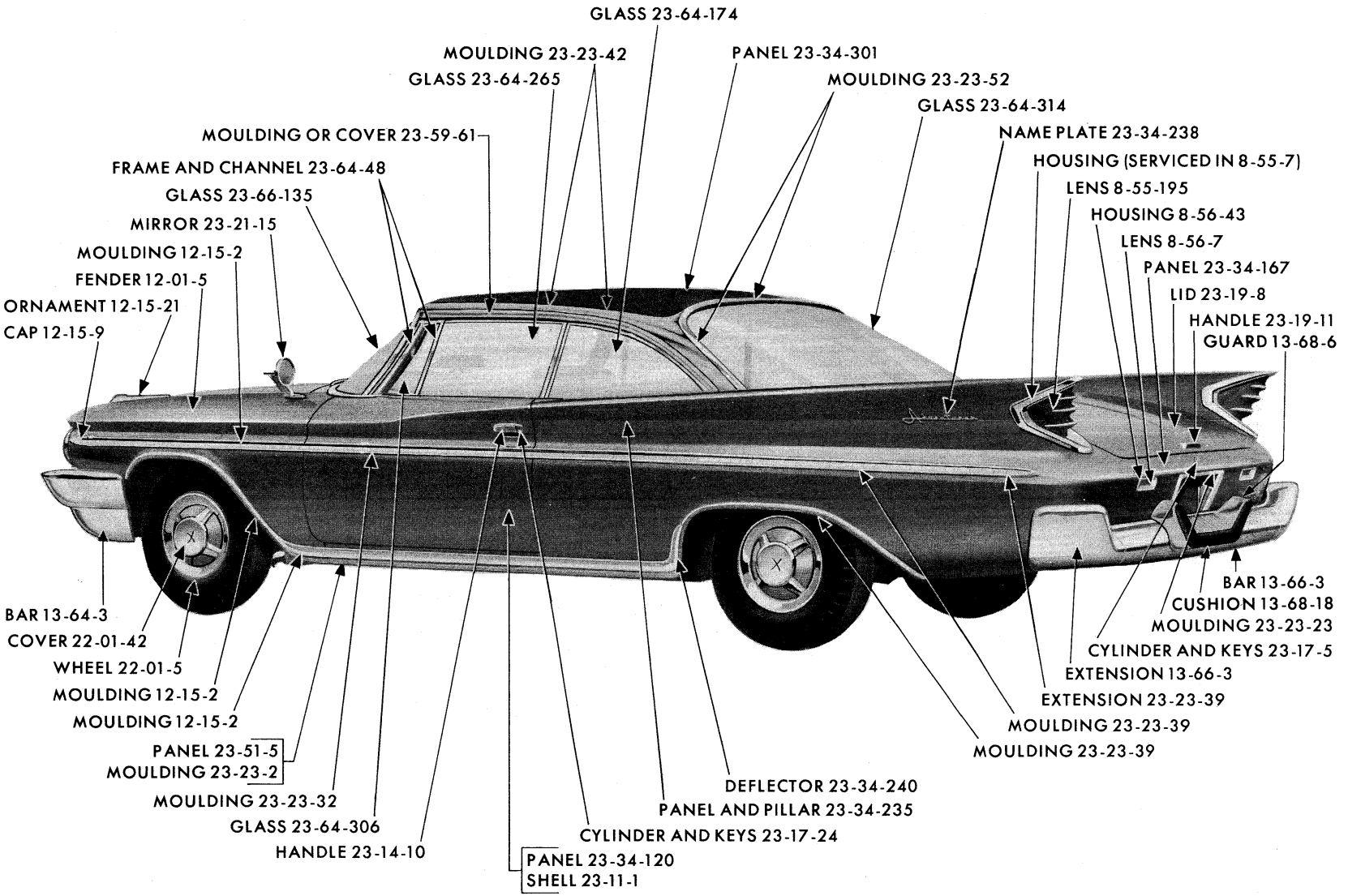


19x8653B

REAR EXTERIOR - DESOTO PS1-3 SPECIAL CLUB COUPE

MyMopar.com

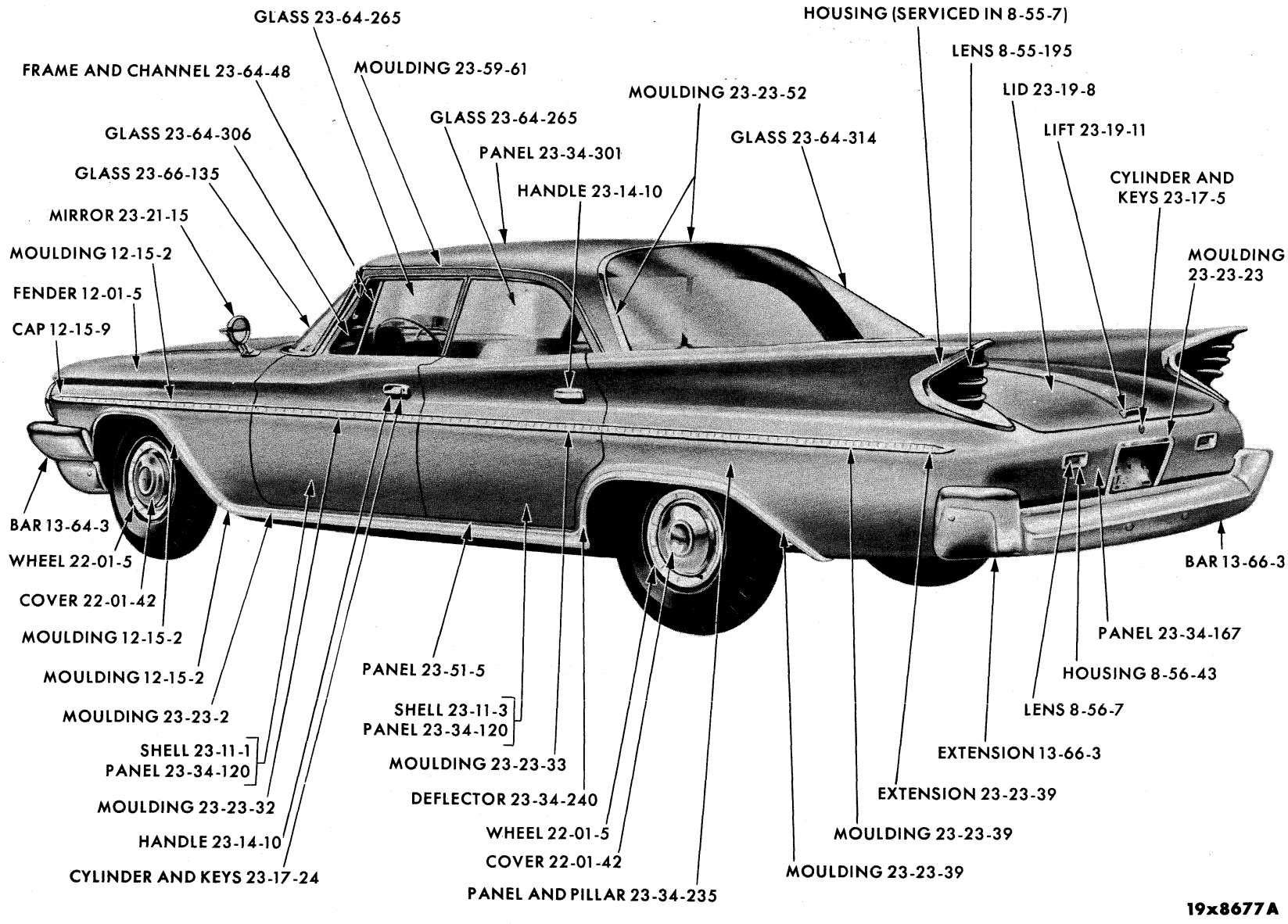


REAR EXTERIOR - DESOTO PS1-3 SPECIAL 4 DOOR SEDAN

MyMopar.com

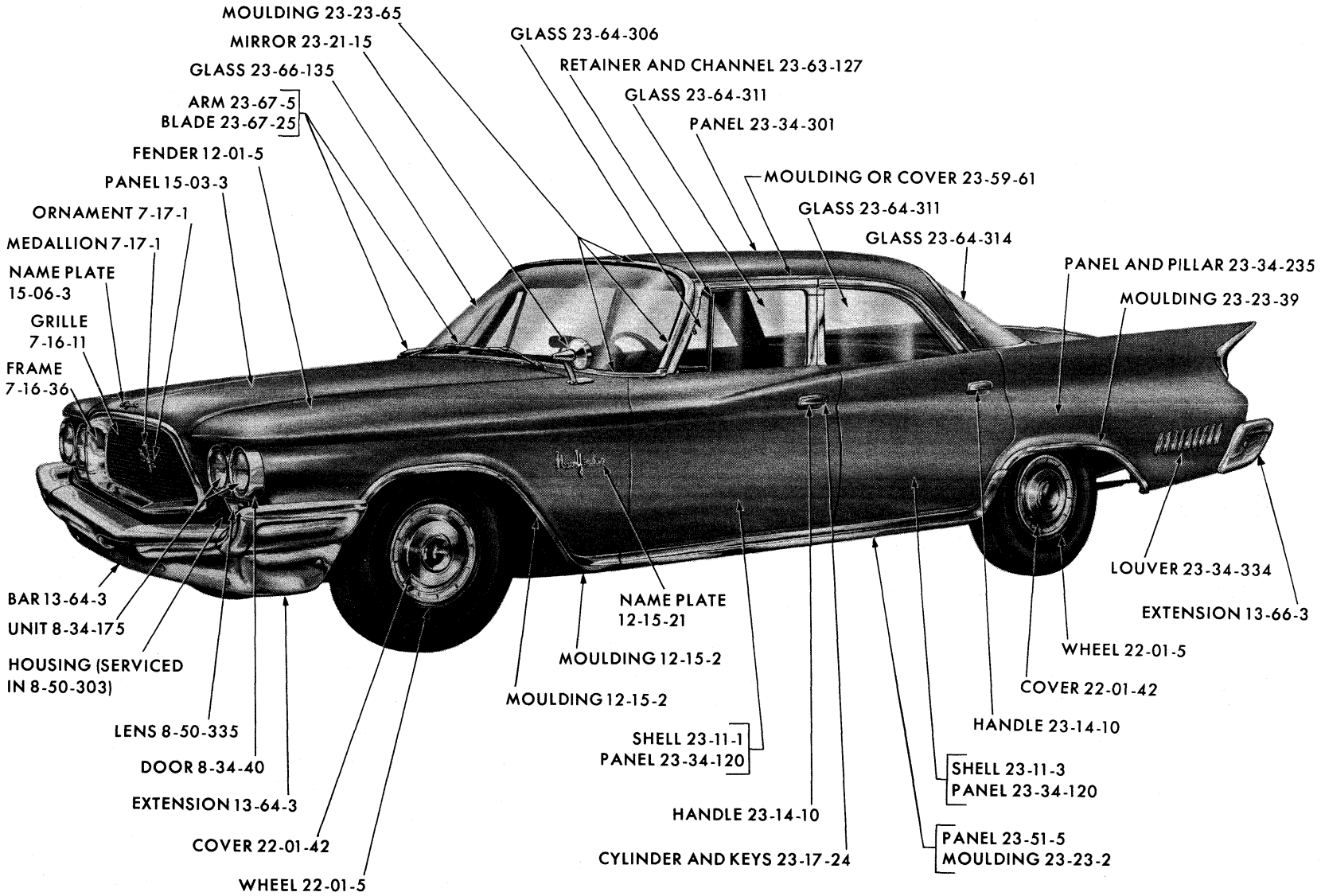


19x8630

FRONT EXTERIOR - CHRYSLER PC1-2-3 4 DOOR SEDAN

MyMopar.com

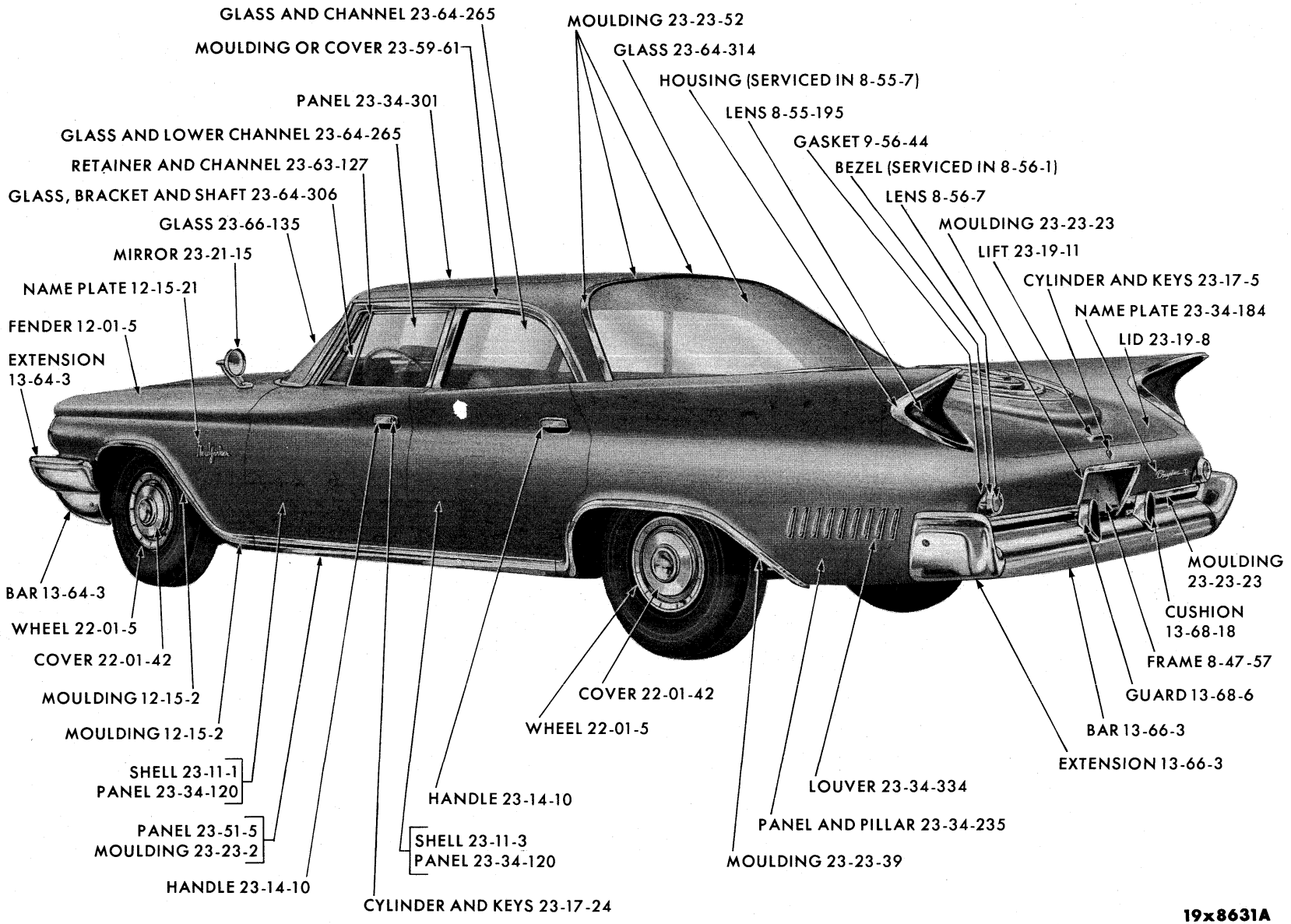


**REAR EXTERIOR - CHRYSLER PC1-2-3 4 DOOR SEDAN**

MyMopar.com

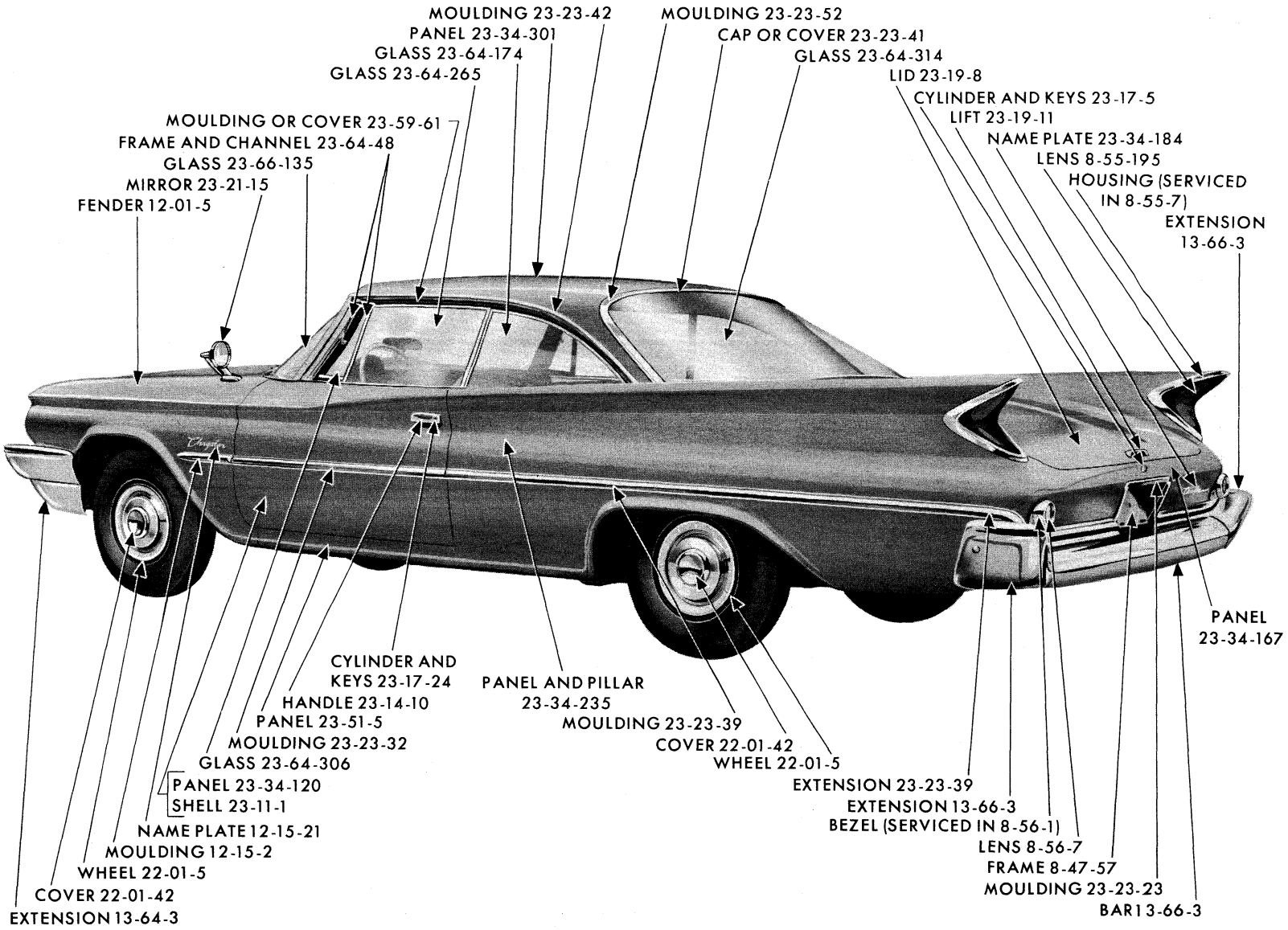


REAR EXTERIOR - CHRYSLER PC1-2-3 SPECIAL CLUB COUPE

MyMopar.com

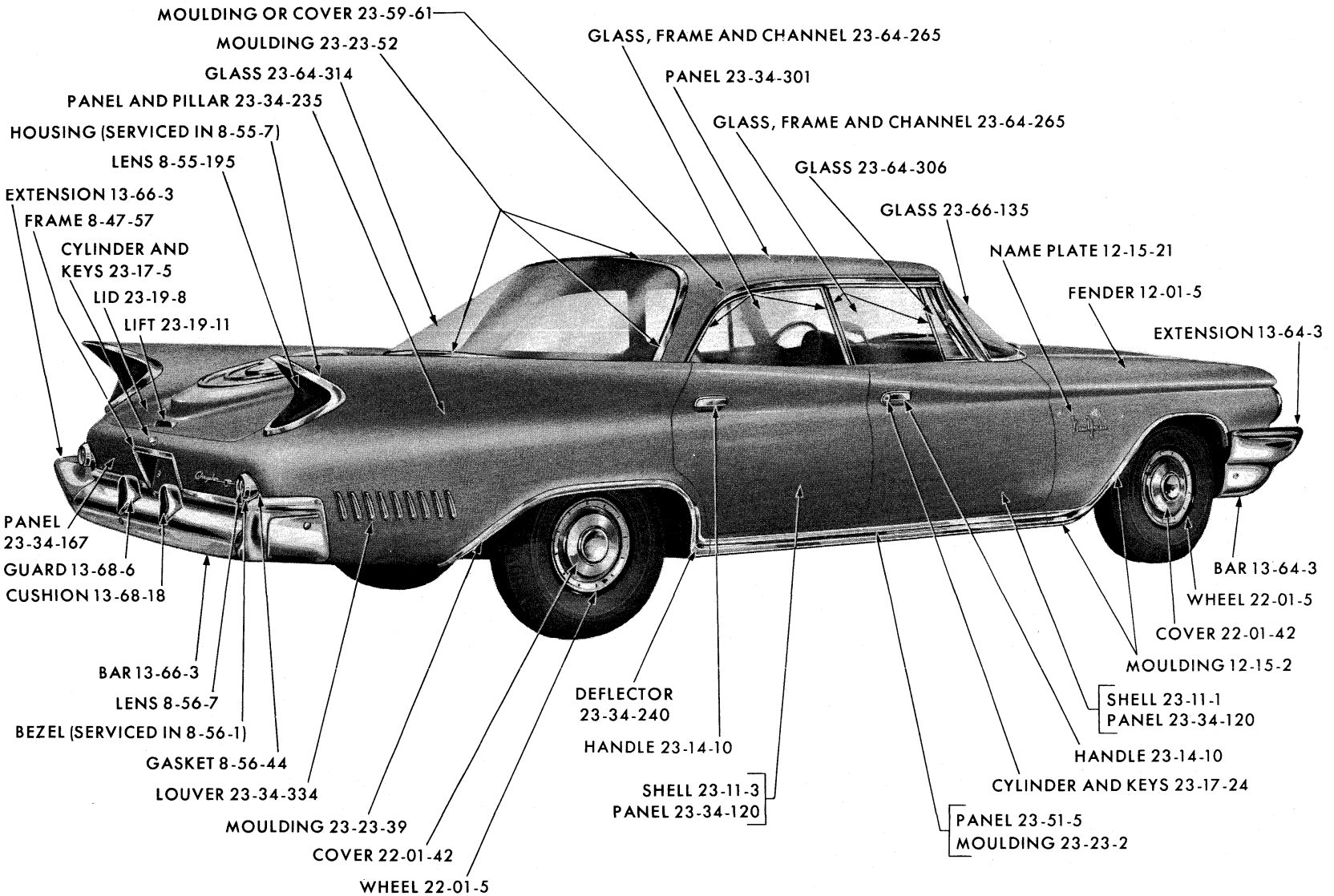


**REAR EXTERIOR - CHRYSLER PC1-2-3 SPECIAL 4 DOOR SEDAN**

MyMopar.com

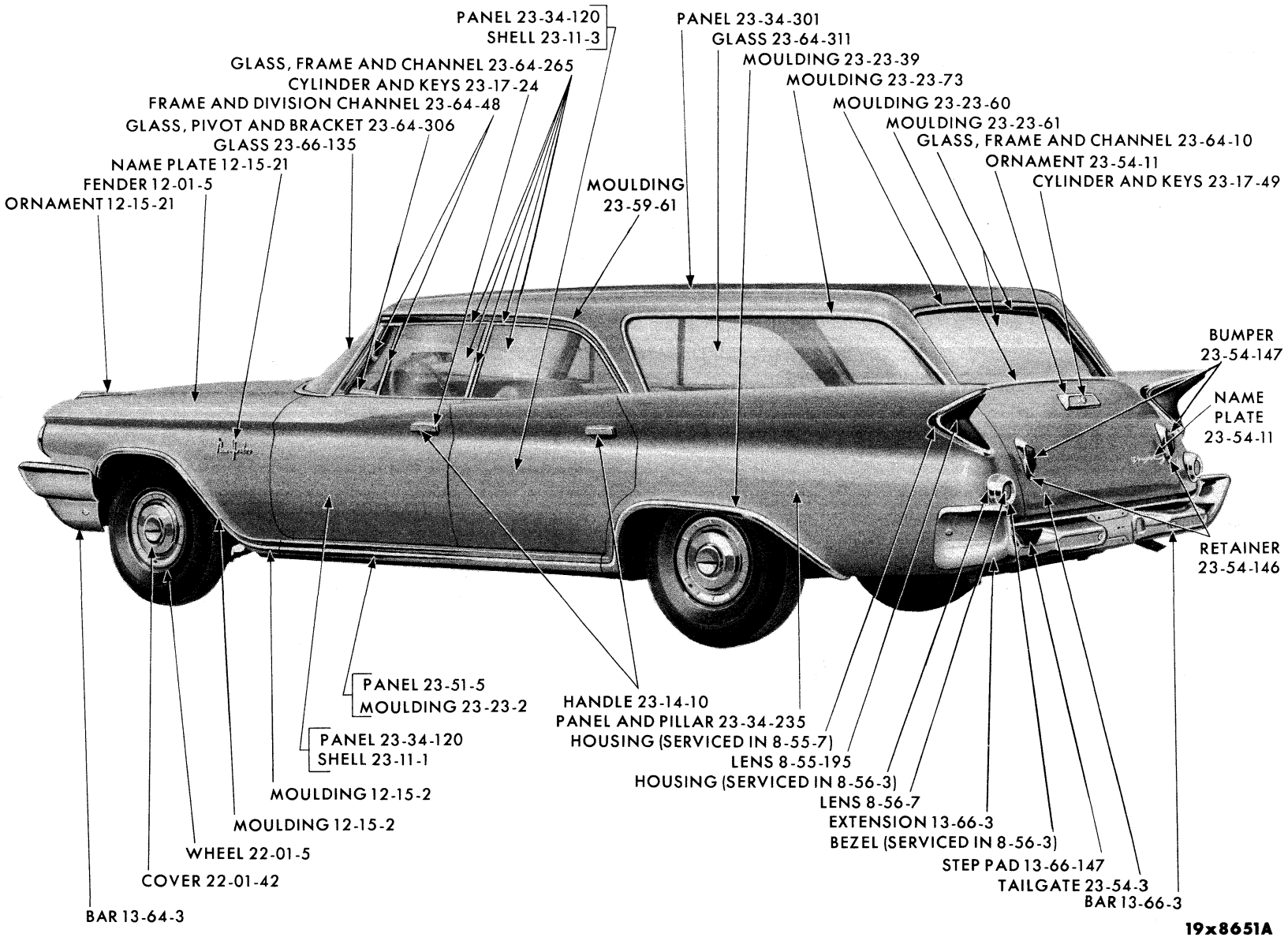


**REAR EXTERIOR - CHRYSLER PC1-2-3 SPECIAL 4 DOOR SUBURBAN**

MyMopar.com

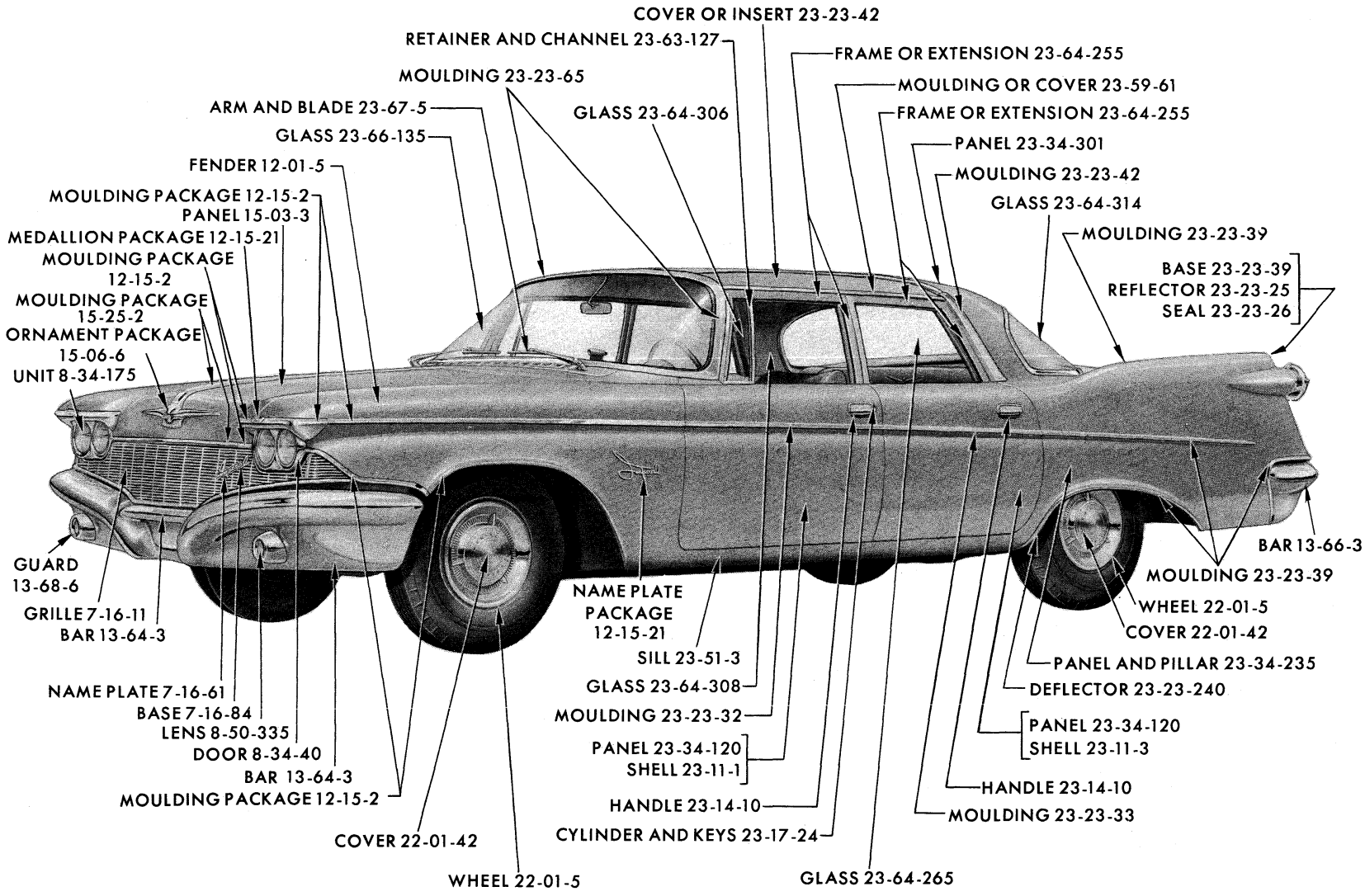


FRONT EXTERIOR - IMPERIAL PY1 4 DOOR SEDAN

MyMopar.com

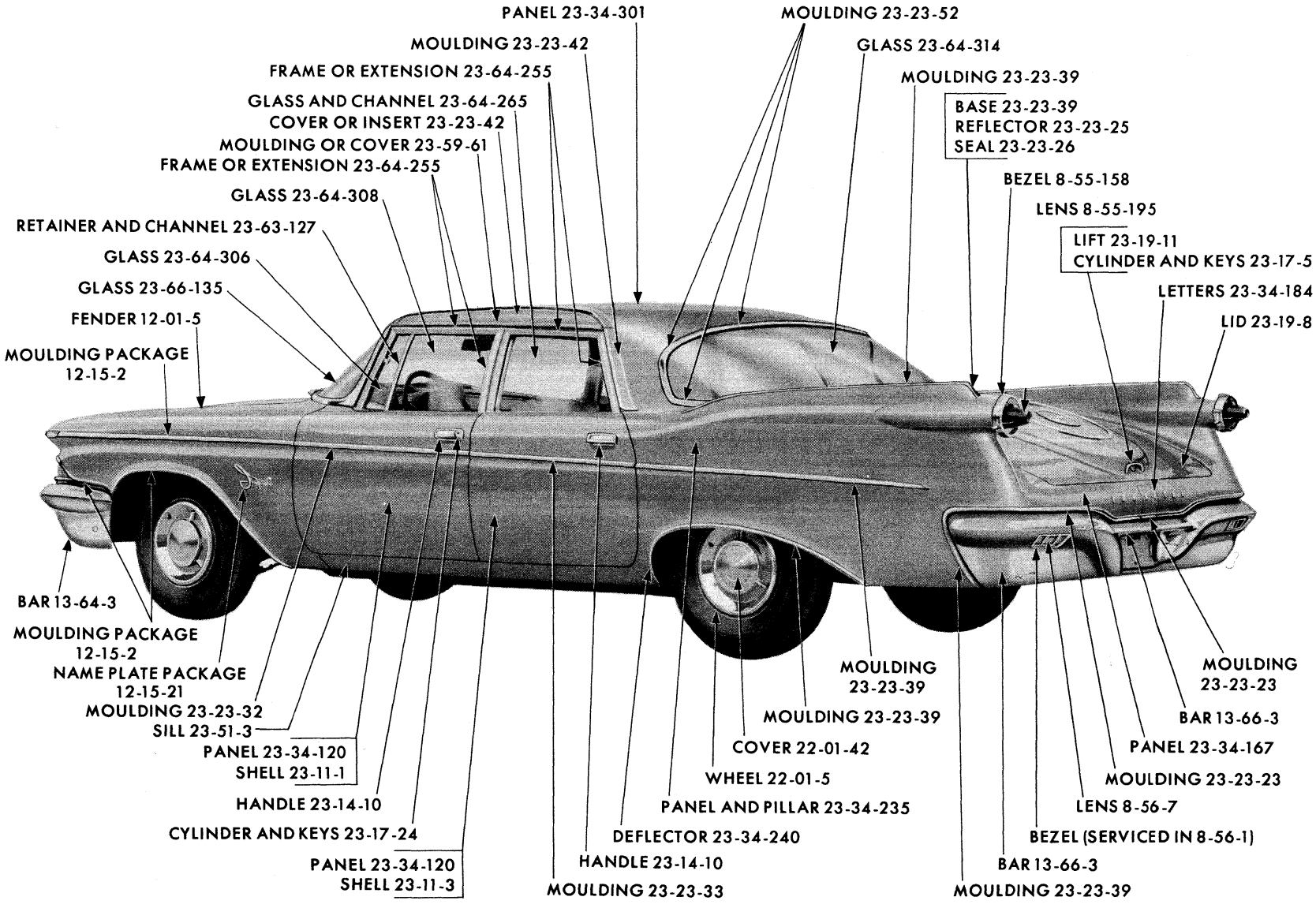


REAR EXTERIOR - IMPERIAL PY1 4 DOOR SEDAN

MyMopar.com

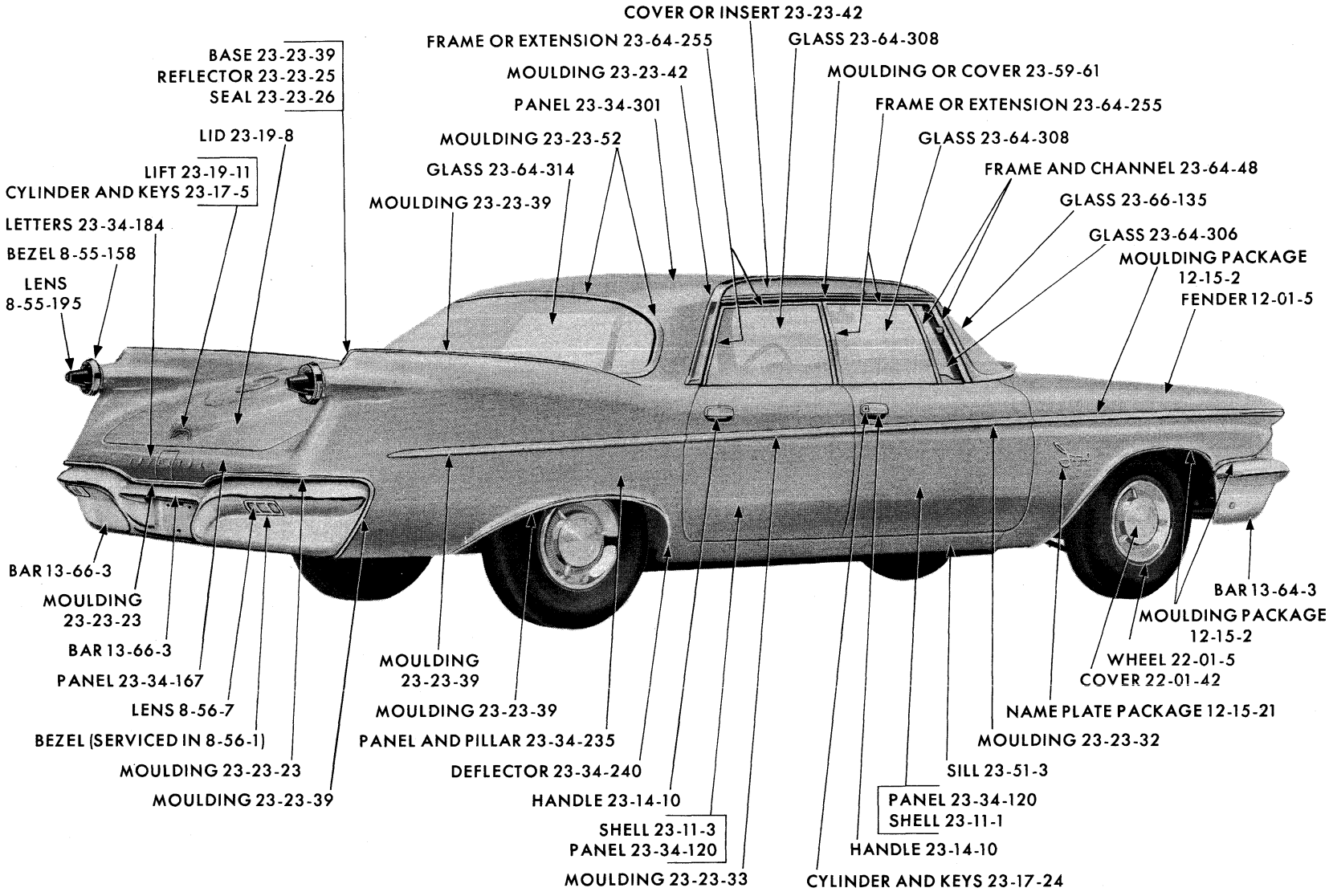


REAR EXTERIOR - IMPERIAL PY1 SPECIAL 4 DOOR SEDAN

MyMopar.com

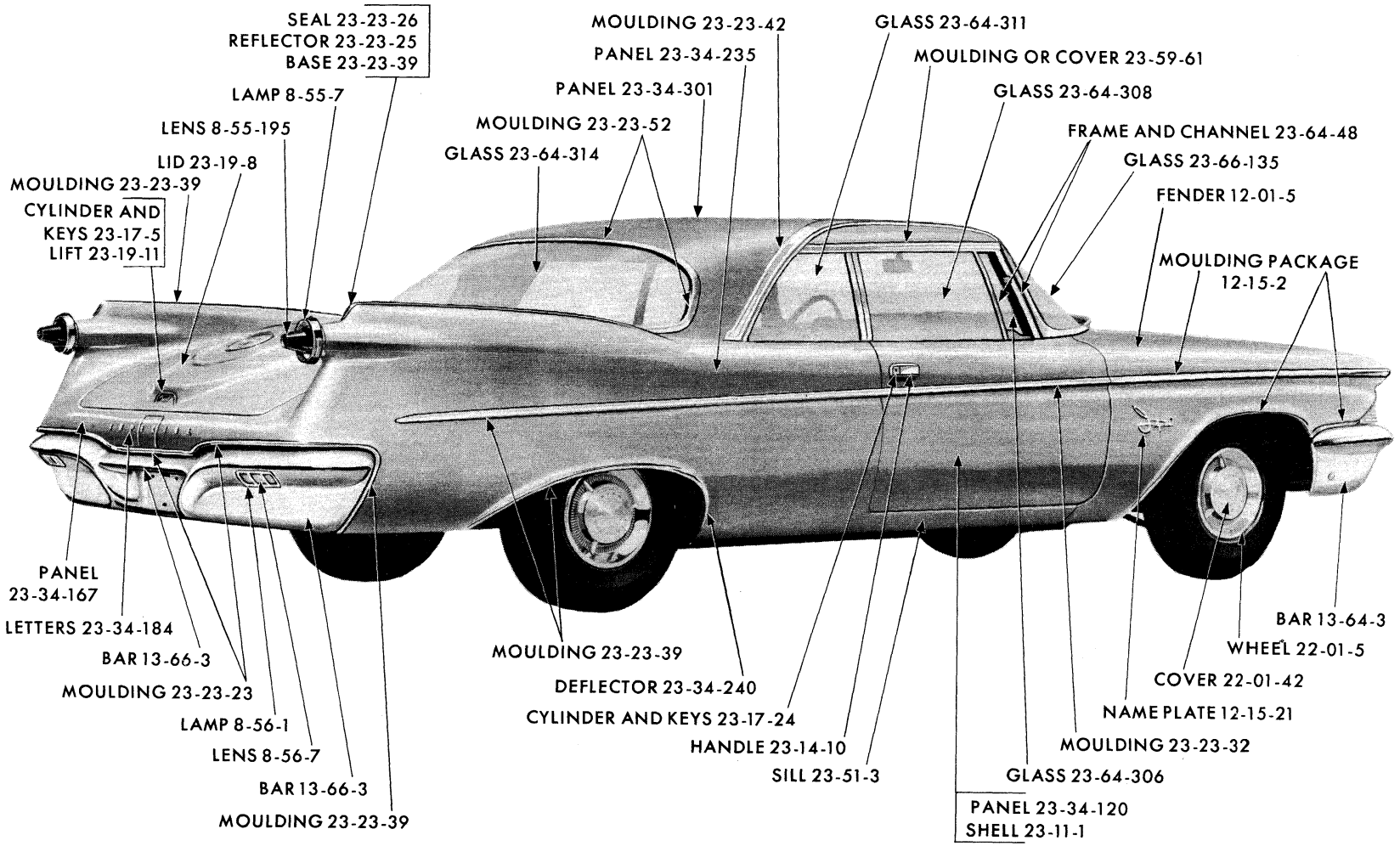


19x8688A

REAR EXTERIOR - IMPERIAL PY1 SPECIAL CLUB COUPE

MyMopar.com

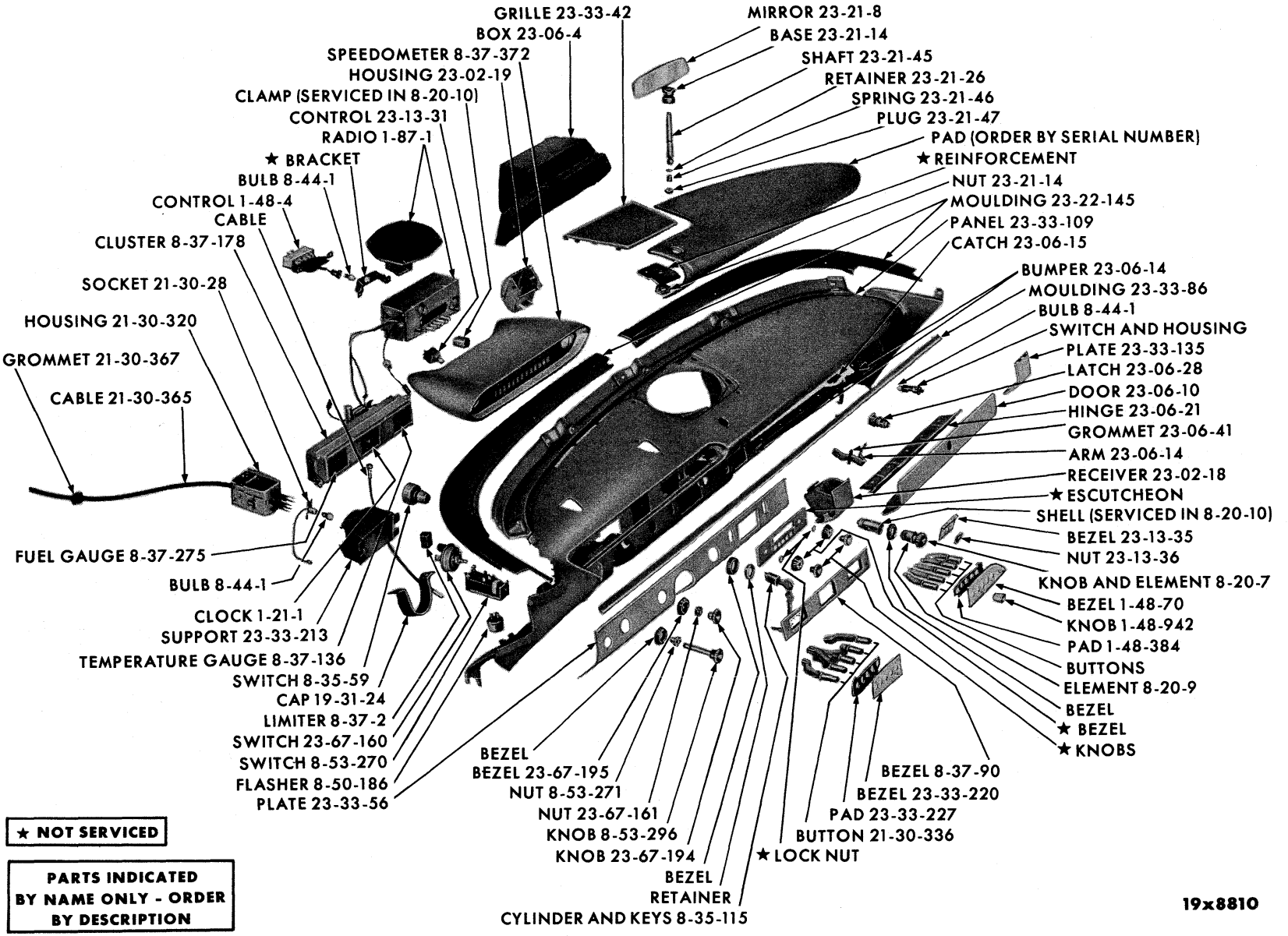


INSTRUMENT PANEL - PLYMOUTH PP1-2

MyMopar.com

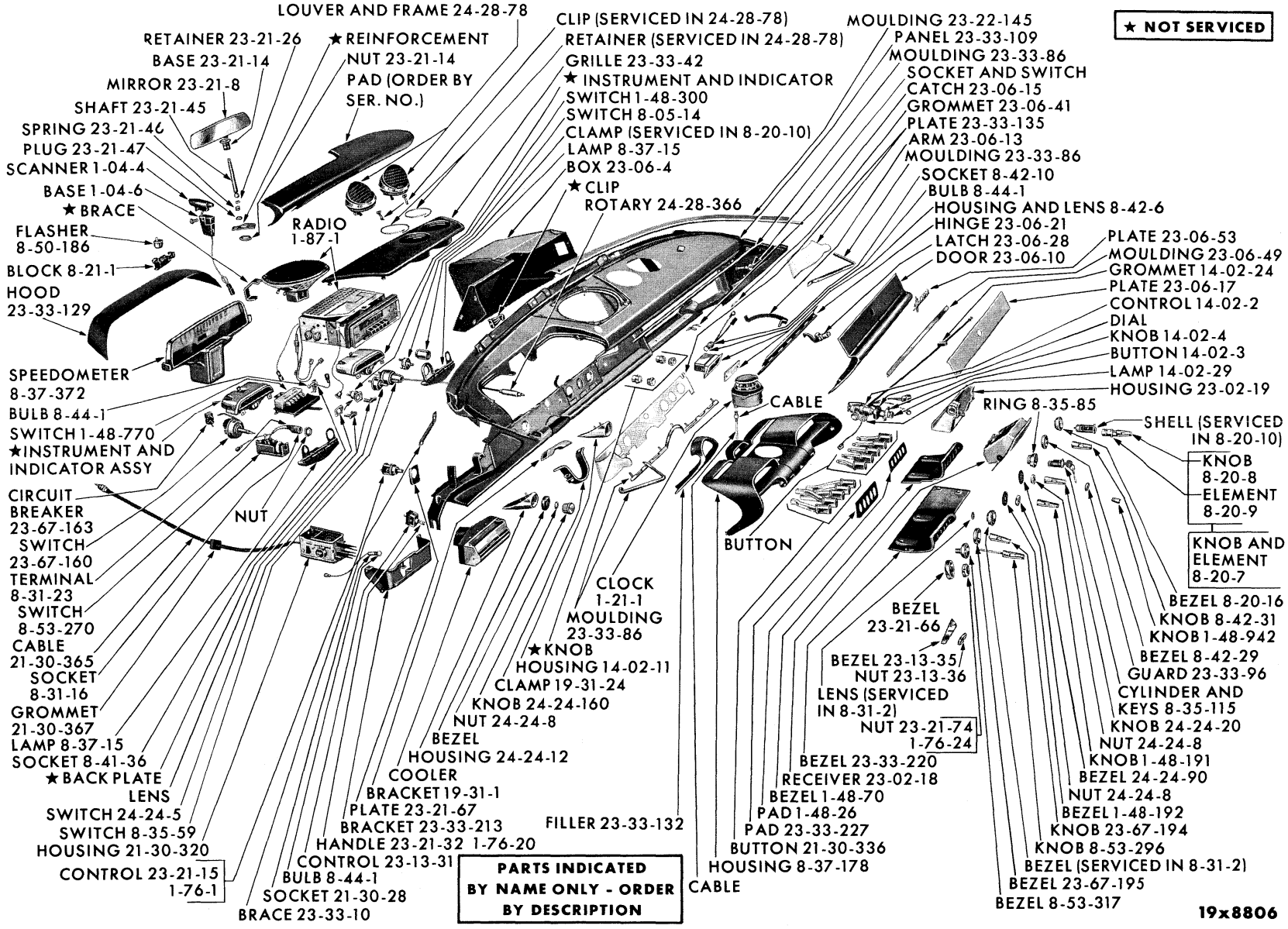


INSTRUMENT PANEL - DODGE PD1-2-3-4

MyMopar.com

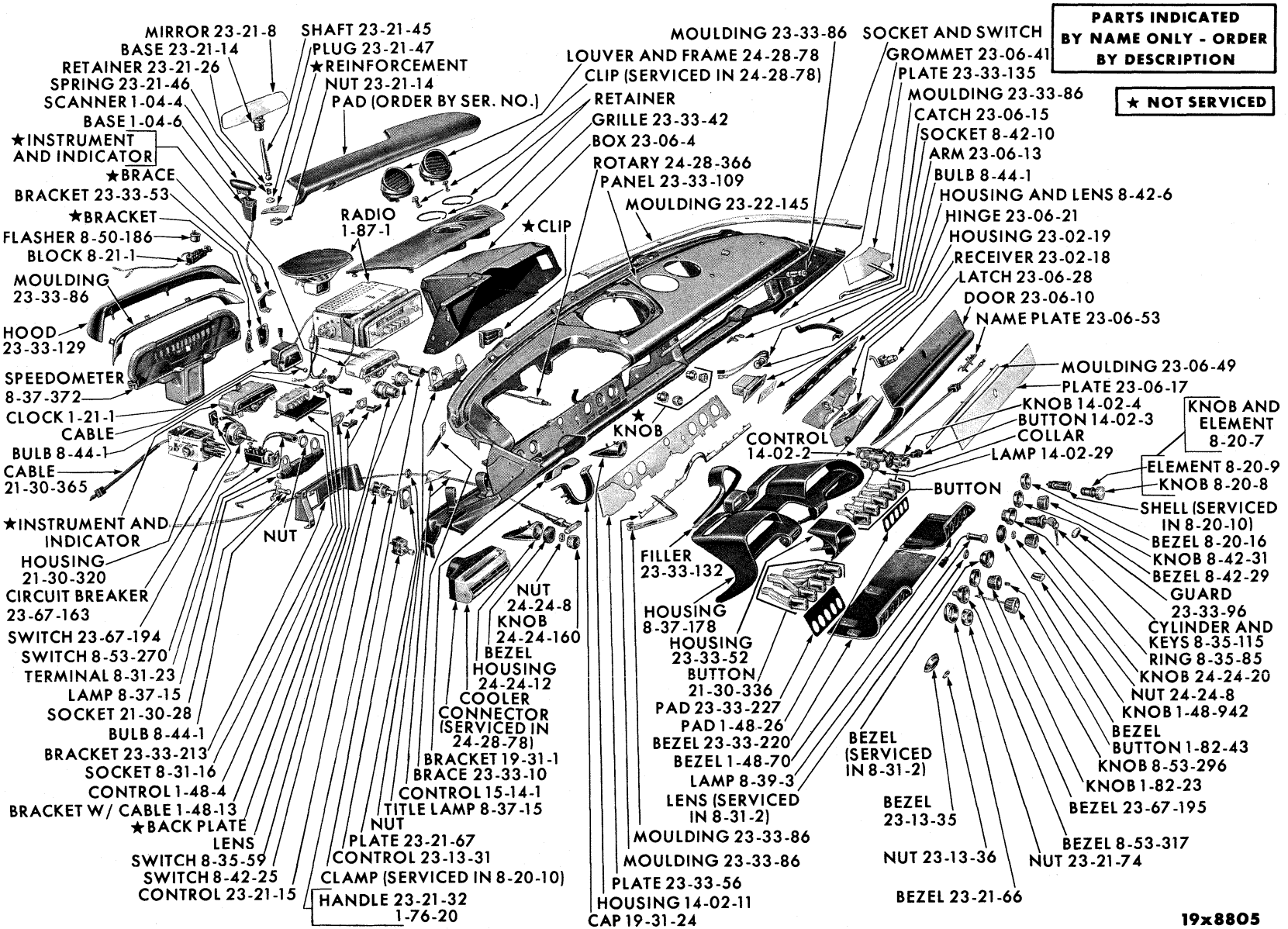


INSTRUMENT PANEL - DESOTO PS1-3

MyMopar.com

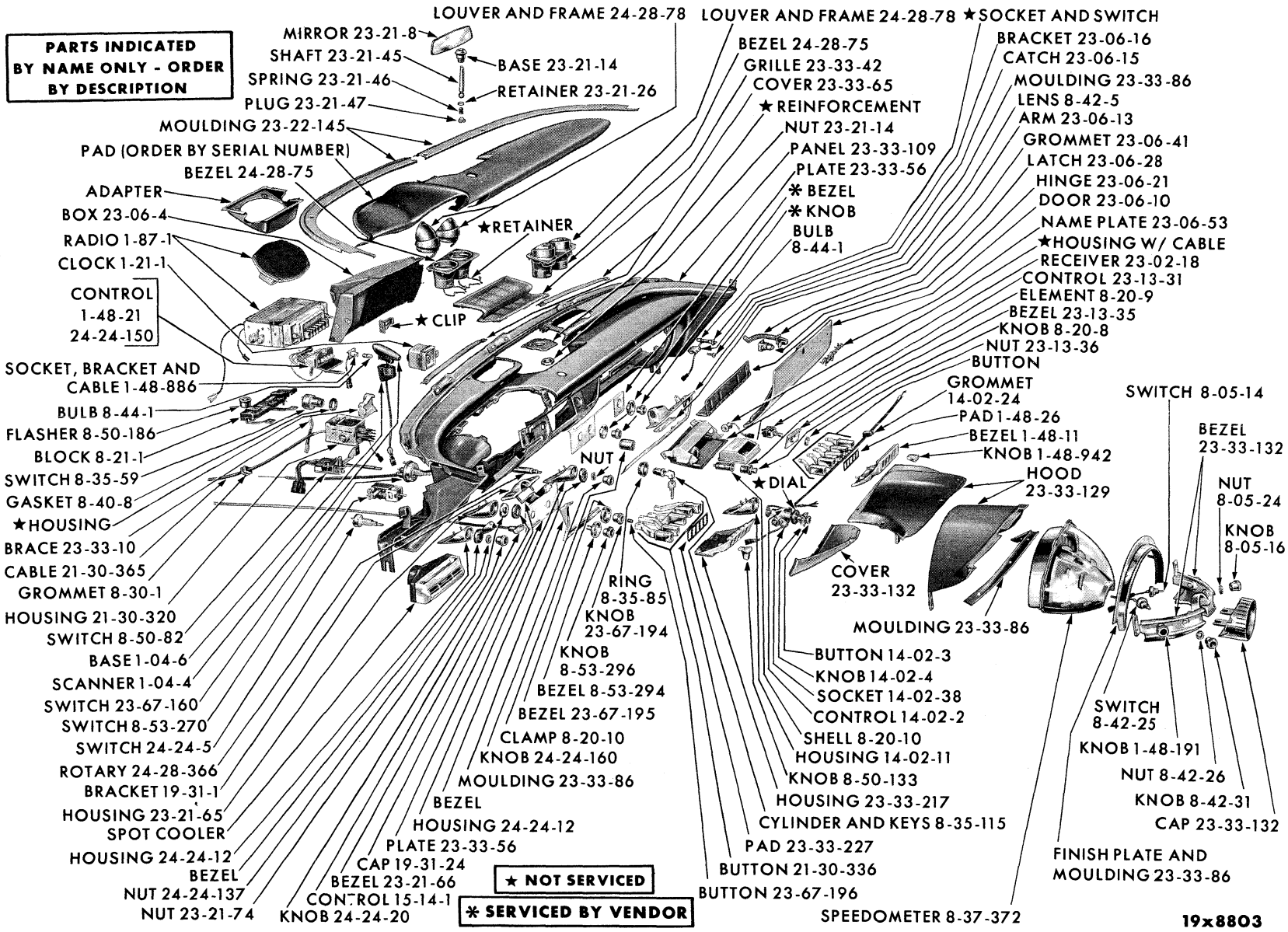


INSTRUMENT PANEL - CHRYSLER PC1-2-3

MyMopar.com

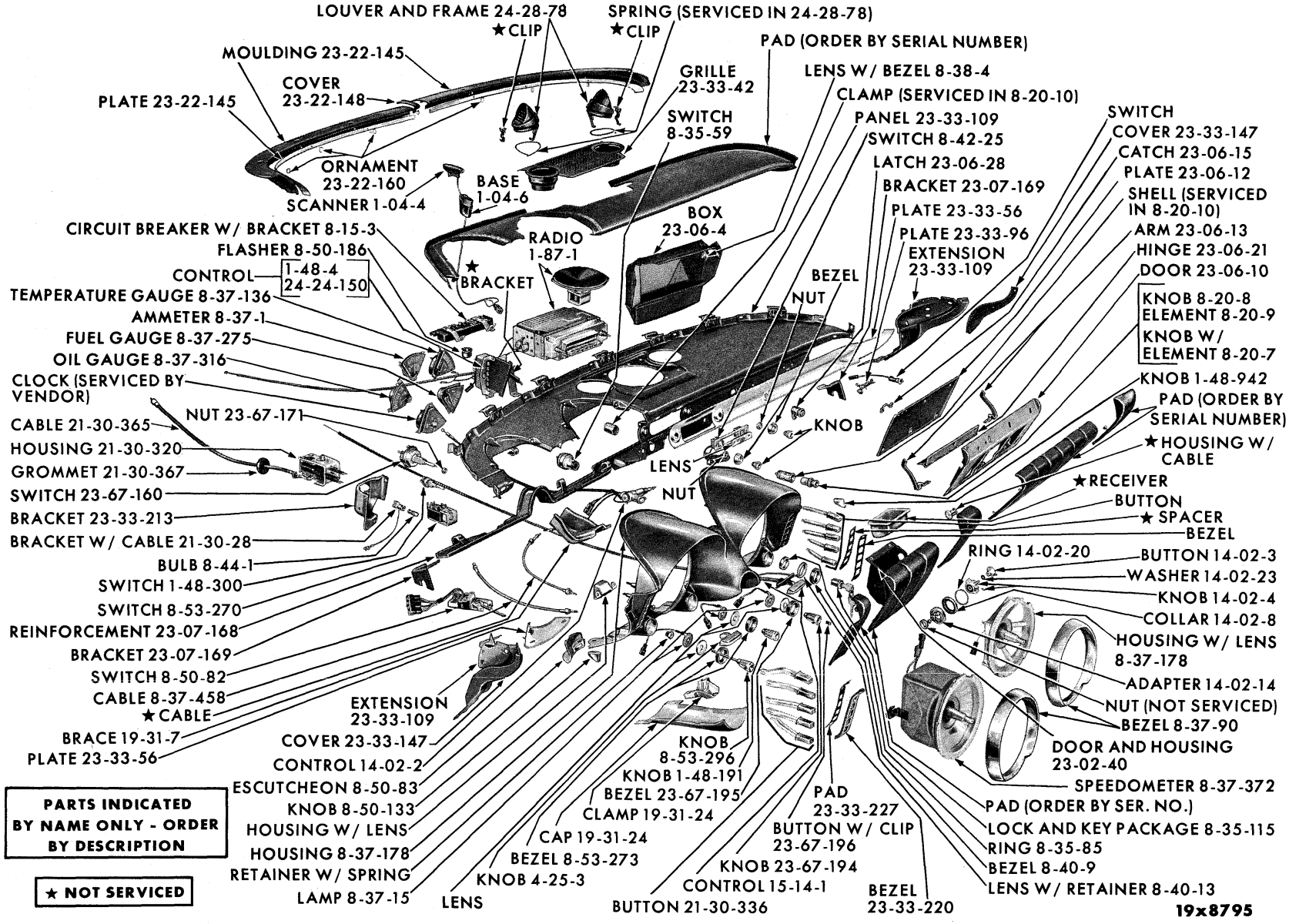


INSTRUMENT PANEL - IMPERIAL PY1

MyMopar.com

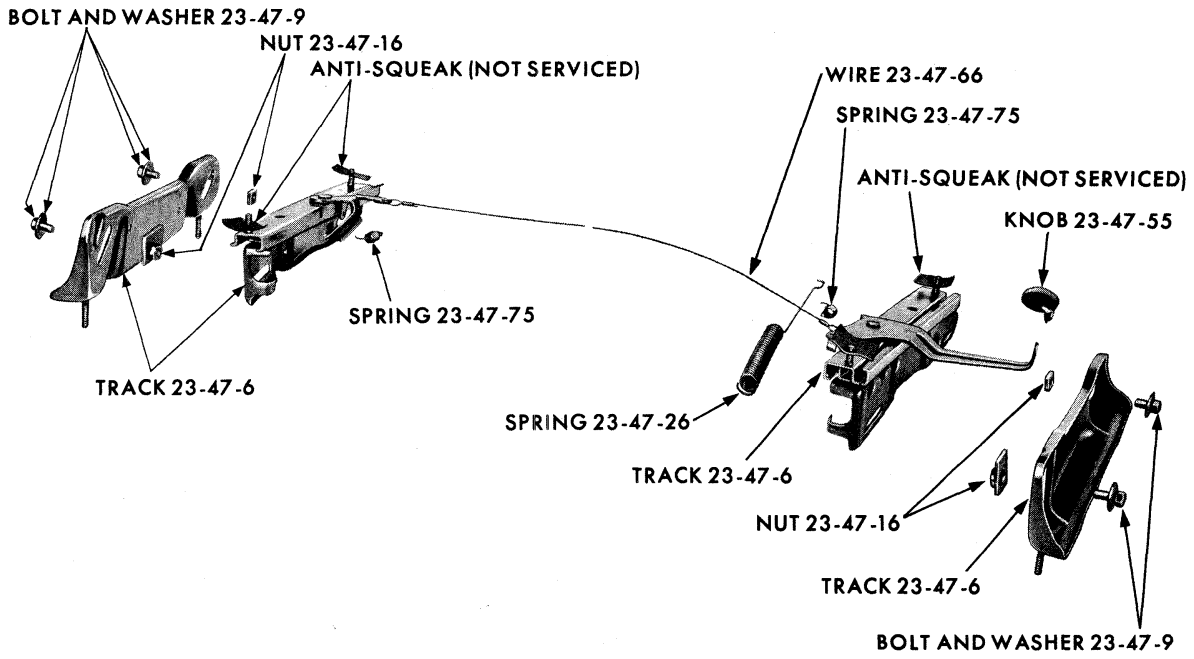


MANUAL SEAT GUIDE

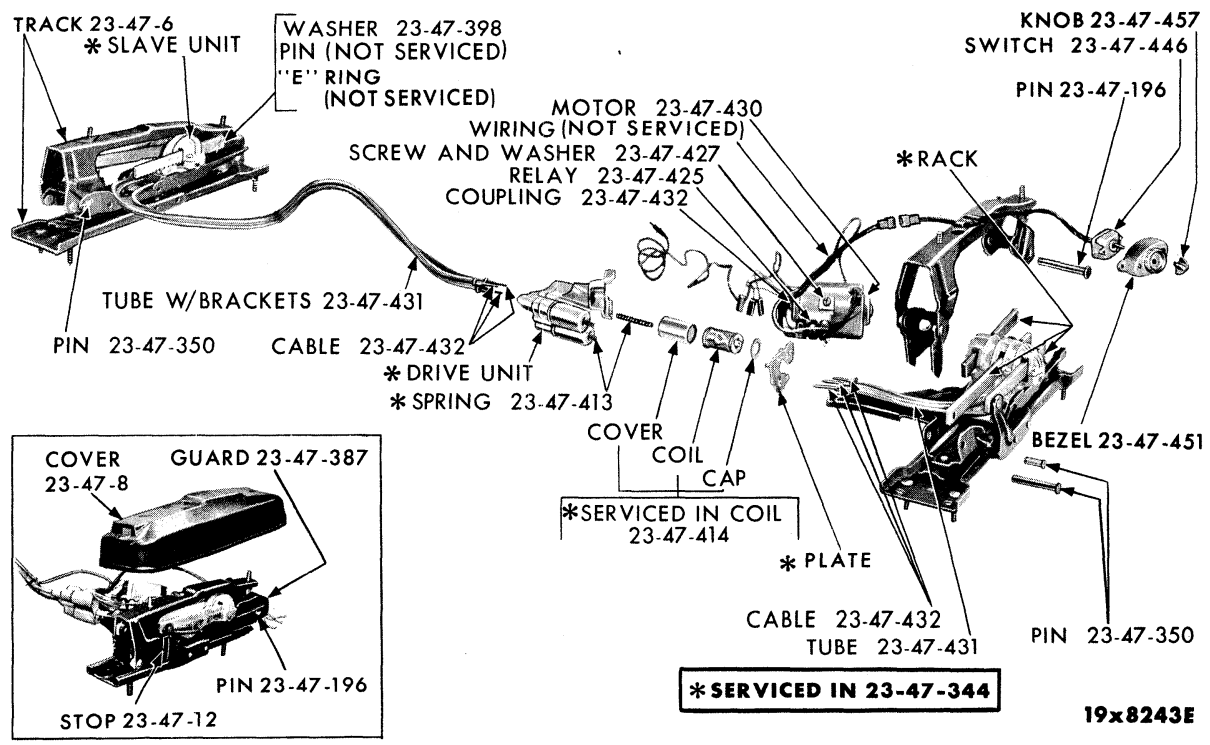


SEAT ADJUSTER - ELECTRIC, 6-WAY



MyMopar.com

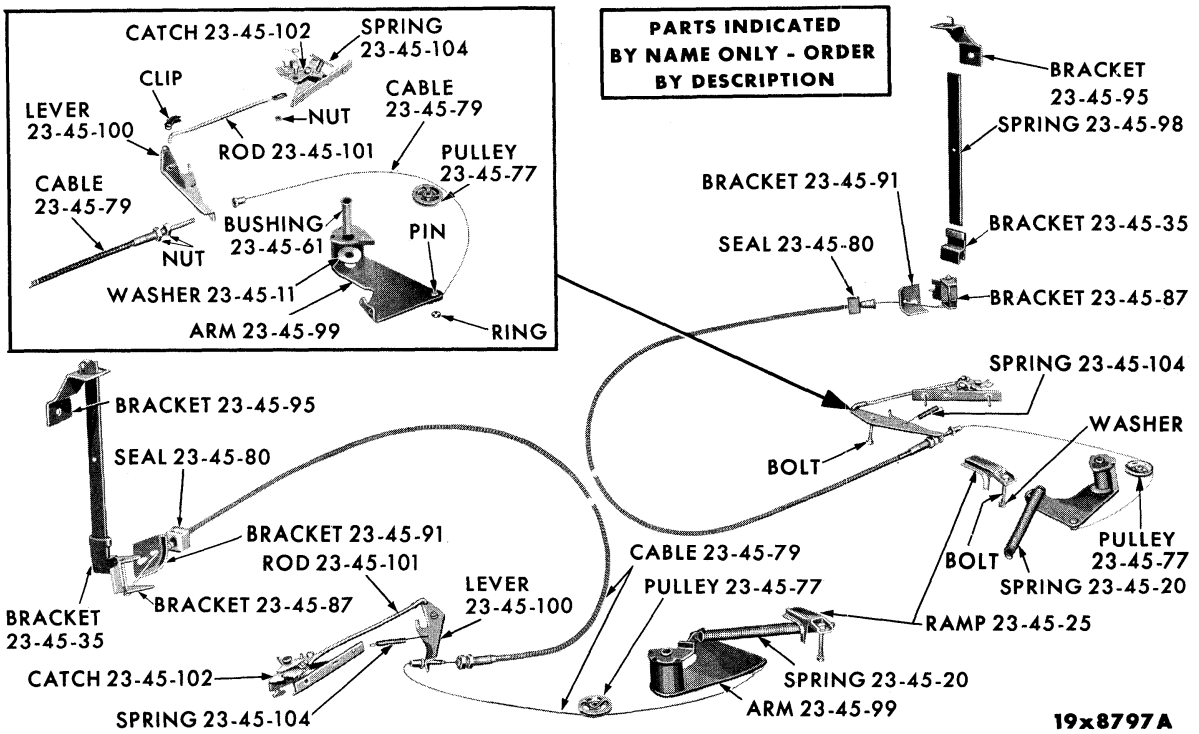


SWIVEL SEAT MECHANISM

## NOTES



MyMopar.com

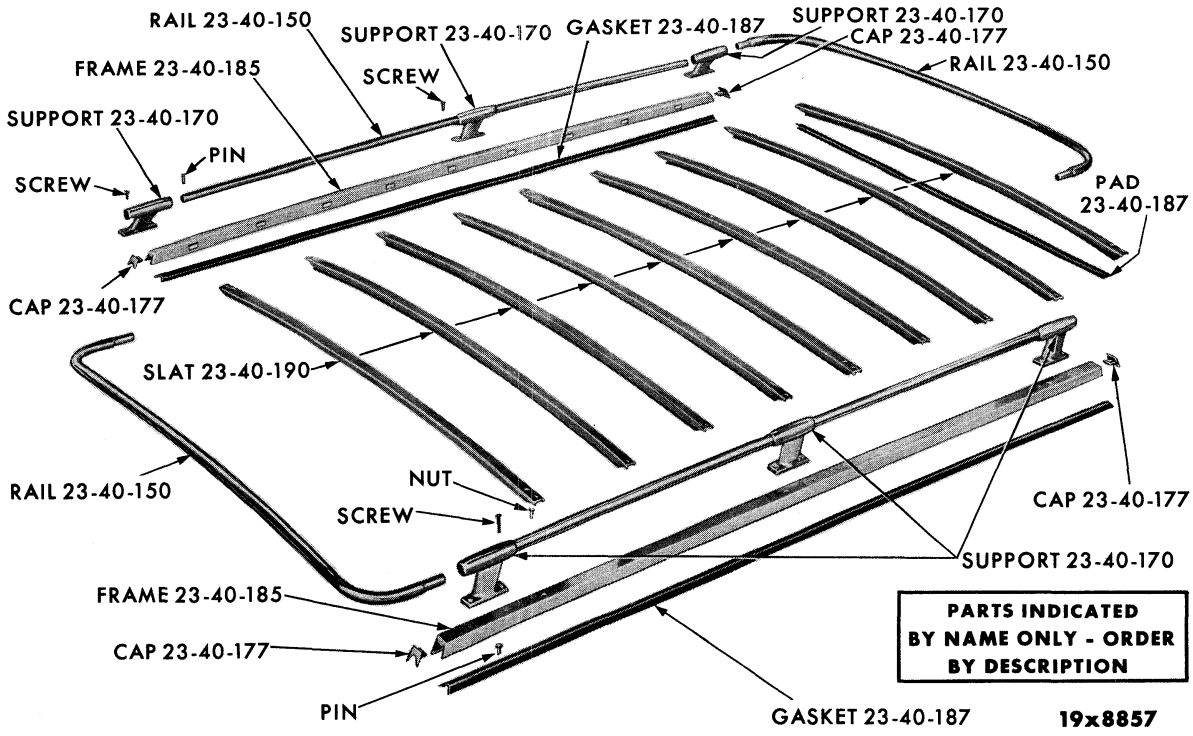


ROOF RACK

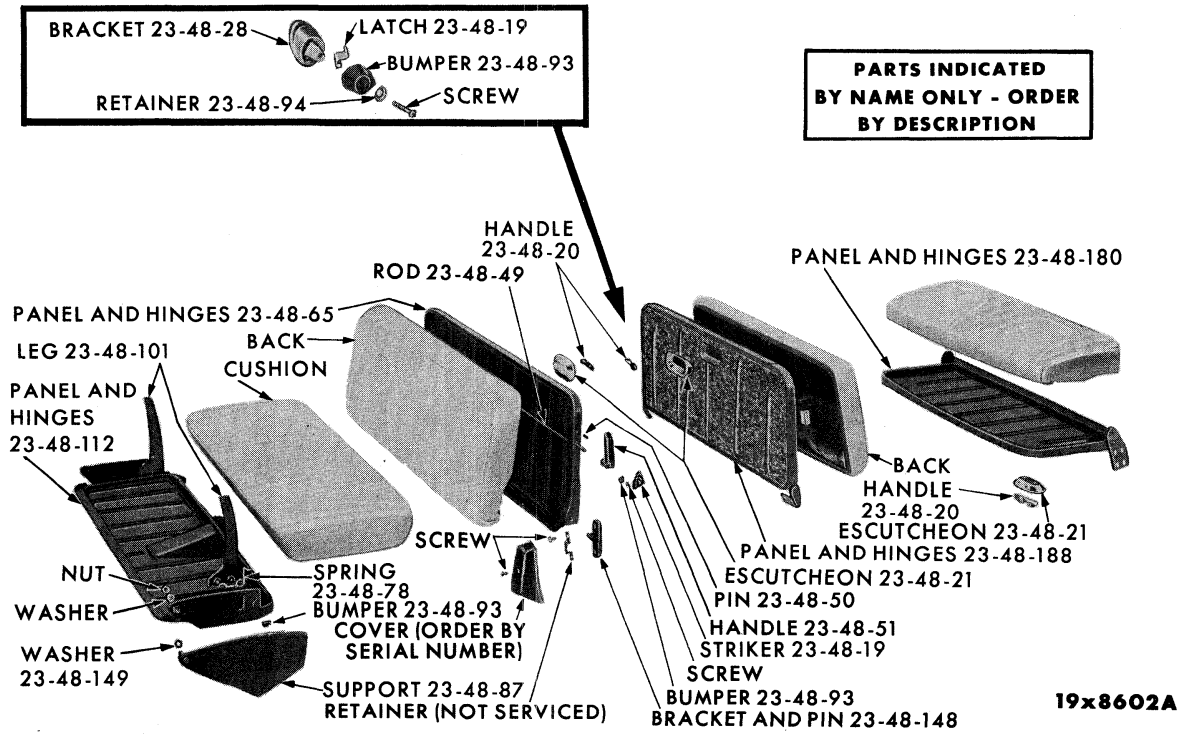


SEATS - SUBURBANS



MyMopar.com

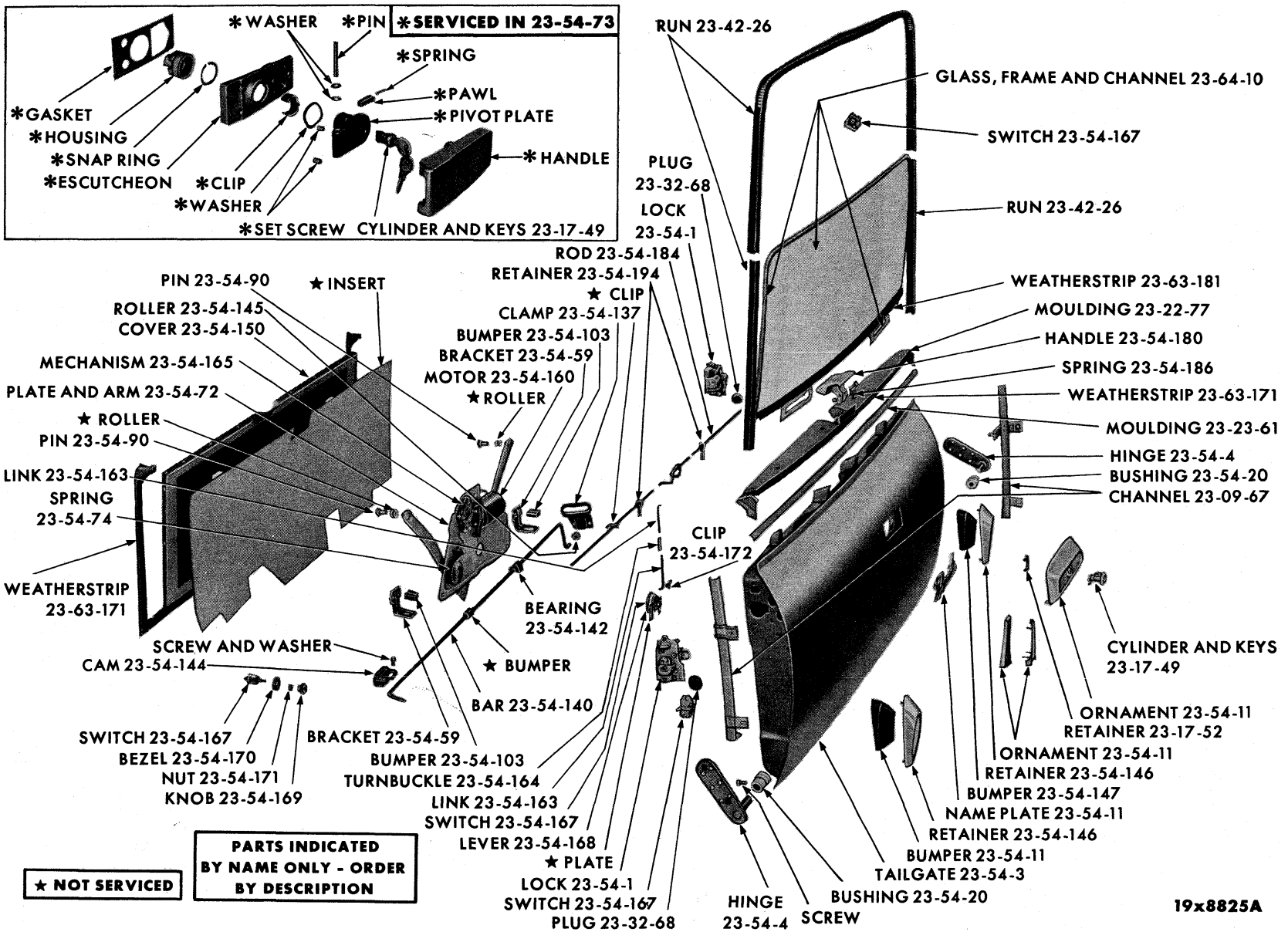


TAILGATE - SUBURBANS

MyMopar.com

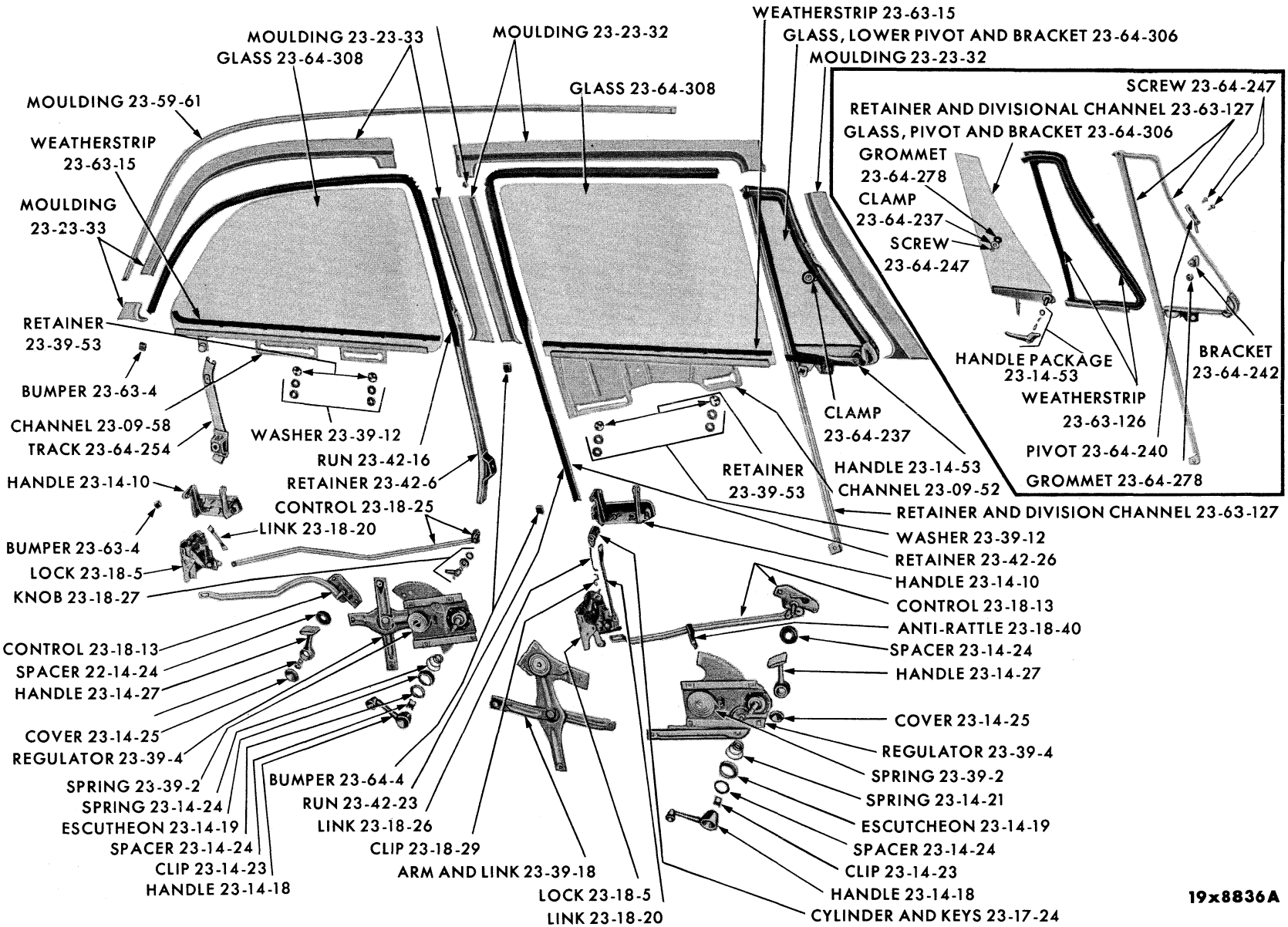


WINDOWS, REGULATORS AND RUNS - PLYMOUTH PP1-2 4 DOOR SEDAN

MyMopar.com

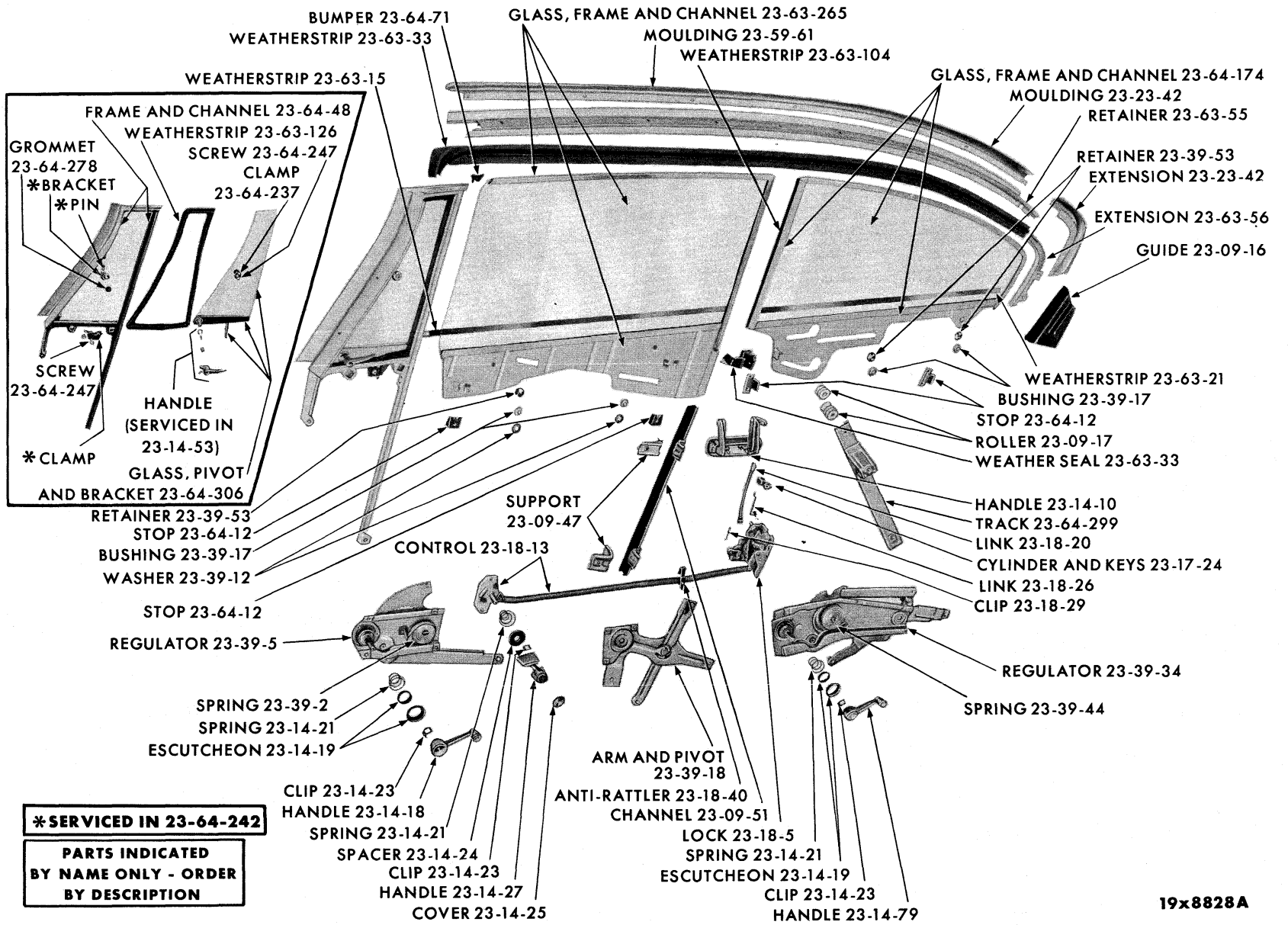


WINDOWS, REGULATORS AND RUNS - PLYMOUTH PP1-2 SPECIAL CLUB COUPE

MyMopar.com

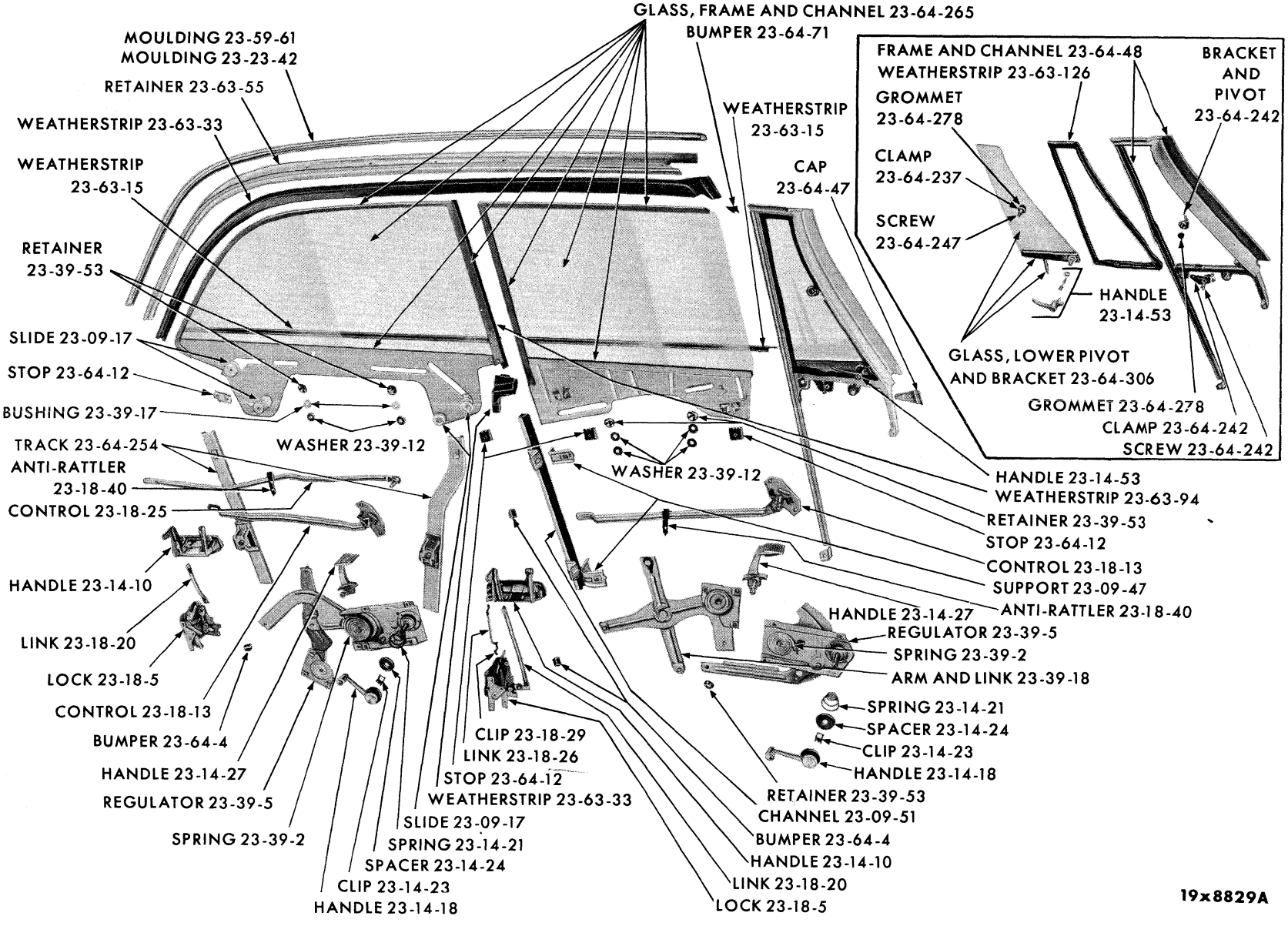


WINDOWS, REGULATORS AND RUNS - DODGE PD1-2-3-4, DESOTO PS1-3 AND CHRYSLER PC1-2-3 SPECIAL 4 DOOR SEDAN

MyMopar.com

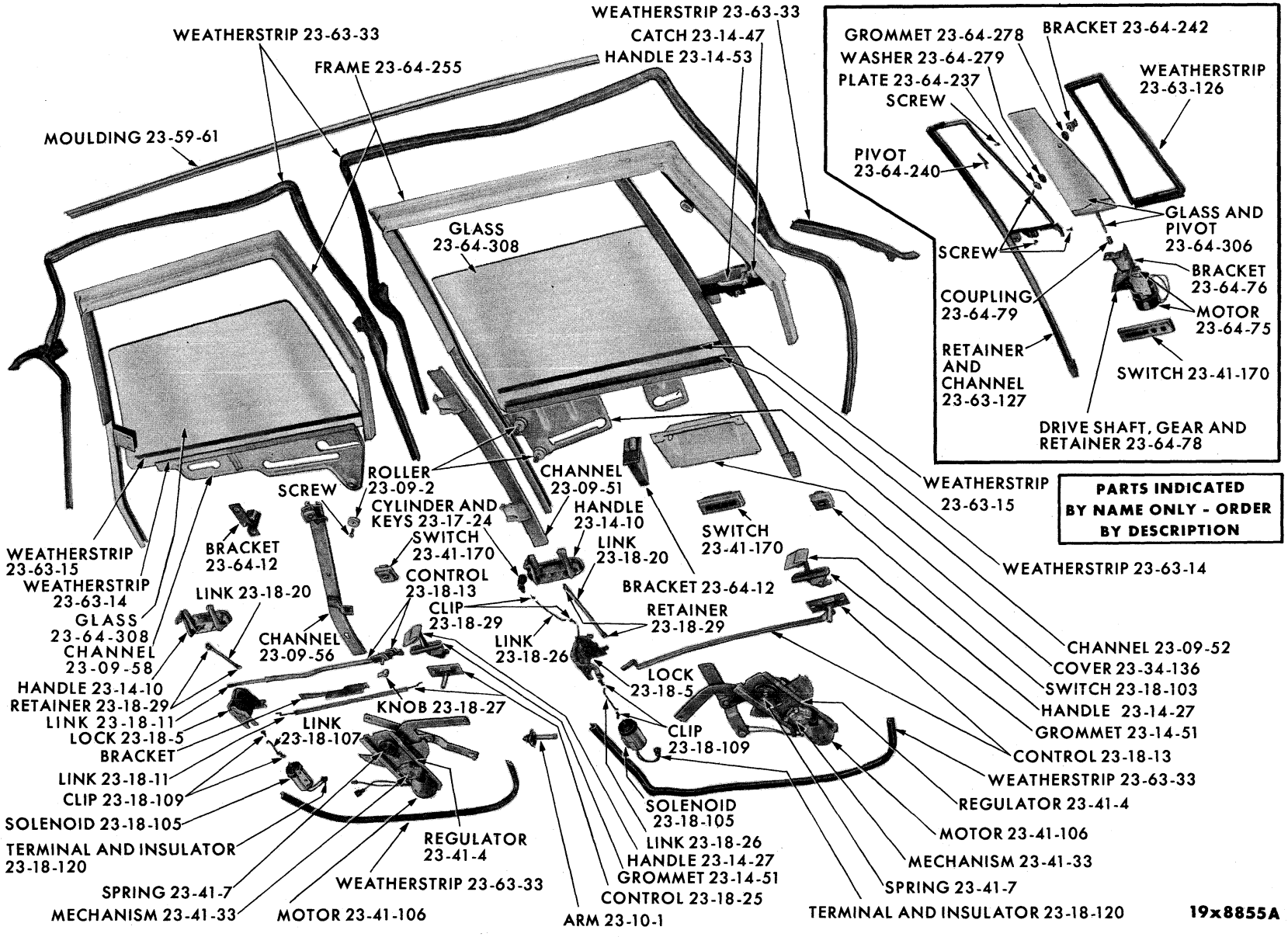


WINDOWS, REGULATORS AND RUNS - IMPERIAL PY1 4 DOOR SEDAN

MyMopar.com

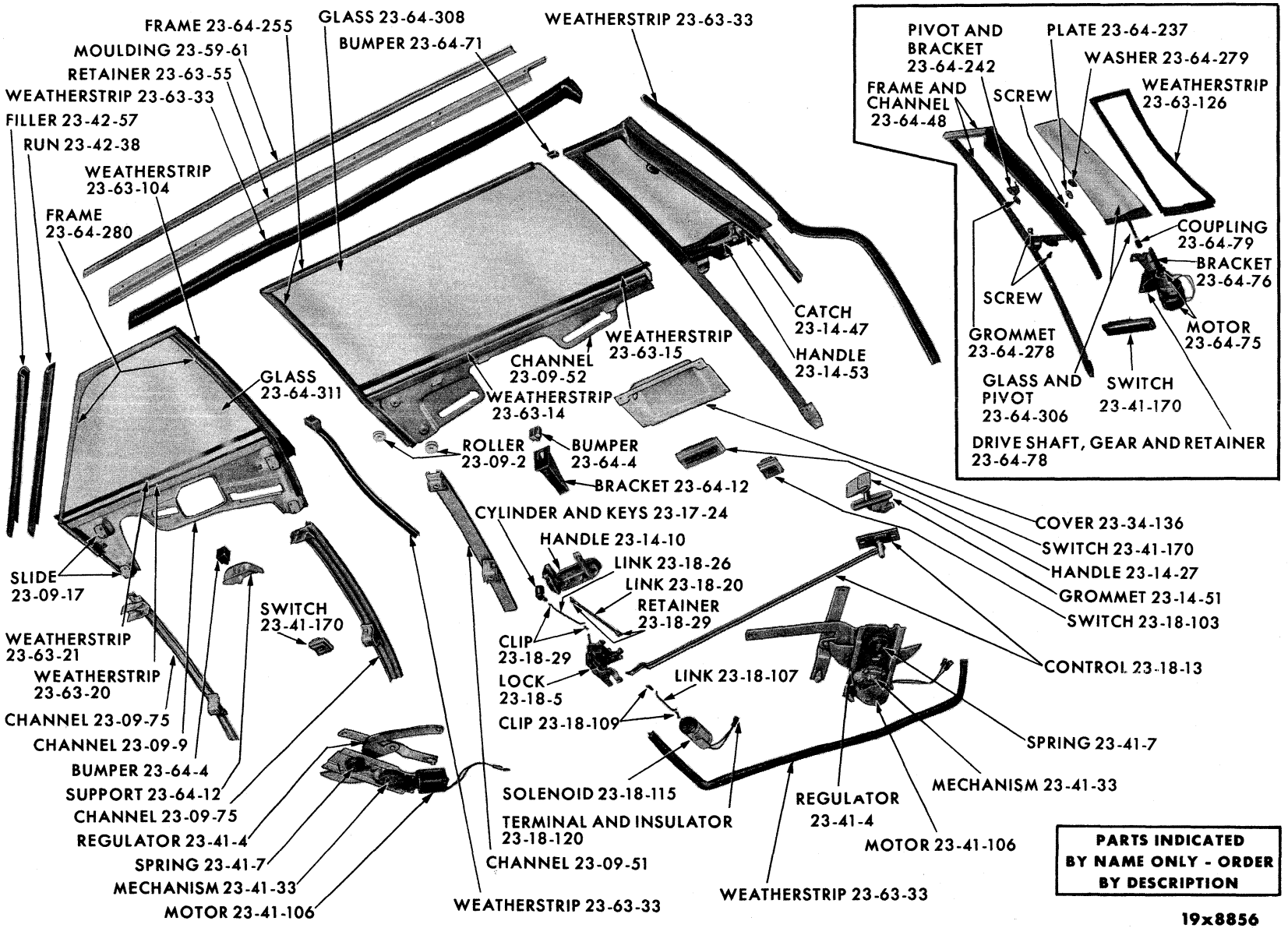


WINDOWS, REGULATORS AND RUNS - IMPERIAL PY1 SPECIAL CLUB COUPE

MyMopar.com

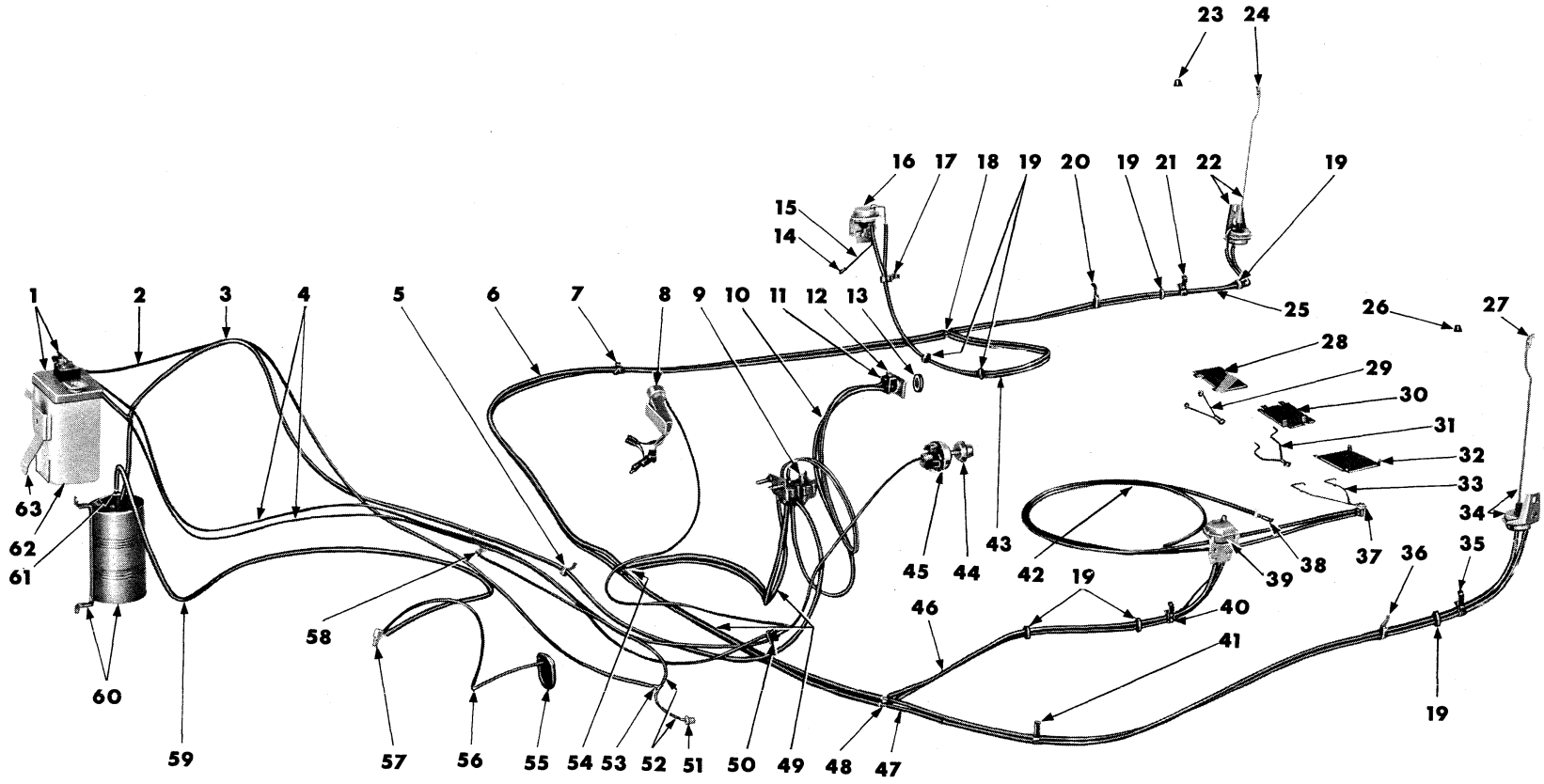


SAFE-T-MATIC DOOR LOCK SYSTEM AND PUSH-BUTTON CONTROLLED VACUUM WINDSHIELD WASHER SYSTEM

MyMopar.com

## SAFE-T-MATIC DOOR LOCK SYSTEM AND PUSH-BUTTON CONTROLLED VACUUM WINDSHIELD WASHER SYSTEM

| Ref. No. | Name | Part No. | Part Type Code |
|---|---|---|---|
| 1 | Pump, w/Cover | 1-2096 686 | 1-82-25 |
| 2 | Hose, Reservoir to Tee | 1-2197 650 | 1-82-44 |
| 3 | Hose, Tank to Distributor Valve (1/4" I.D. x 96" Long) | 1-2097 055 | 23-13-50 |
| 4 | Hose, Reservoir to Actuator Inst. Panel | 1-2096 623 | 1-82-44 |
| | Hose, Reservoir to Coord. Switch | 1-2096 623 | 1-82-44 |
| 5 | Strap | | Not Serv. |
| 6 | Tube, Floor Pan, Right (3/16" I.D. x 87" Long) | 2-1964 204 | 23-13-10 |
| 7 | Clamp | ★-2165 090 | 23-13-25 |
| 8 | Switch, Windshield Washer Coordinator | 1-1971 660 | 1-82-14 |
| 9 | Valve, Distributor | 1-2096 690 | 23-13-41 |
| 10 | Tube, Control (or Switch) to Distributor Valve (1/8" I.D. x 32" Long) | 1-1964 685 | 23-13-10 |
| | (5/32" I.D. x 32" Long) | 1-1964 641 | |
| 11 | Control, Instrument Panel (or Switch) | 1-2096 487 | 23-13-31 |
| 12 | Bezel (Round, use without pad) | 1-2096 488 | 23-13-35 |
| | (Oblong, use with pad) | 1-2096 489 | |
| 13 | Nut, Control and Bezel Mounting | 1-2096 490 | 23-13-36 |
| 14 | Clip, Rod End to Door Lock, Front | 1-6000 798-9 | 23-13-17 |
| 15 | Rod, Front Door Power Unit to Door Lock (Plymouth and Dodge) | 2-1963 671 | 23-13-20 |
| | (DeSoto and Chrysler) | 2-1963 673 | |
| 16 | Unit, Front Door Power (Right) | 1963 196 | 23-13-6 |
| 17 | Clamp | | Not Serv. |
| 18 | Tee, Tube (3/16" x 3/16" x 1/4") | ★-1964 610 | 23-13-13 |
| 19 | Grommet (to fit 3/8" hole) | ★-1964 012 | 23-13-11 |
| | (to fit 39/64" hole) | ★-1964 013 | |
| | (to fit 15/16" hole) | ★-1963 094 | |
| | (with dab of green paint) | ★-1963 095 | |
| | (with dab of white paint) | ★-1963 096 | |
| | (with dab of red paint) | ★-1963 097 | |
| 20 | Clamp | | Not Serv. |
| 21 | Clamp | ★-2165 090 | 23-13-25 |
| 22 | Unit, Rear Door Power, w/Rod (Right) | 1-1964 918 | 23-13-6 |
| 23 | Knob, Rear Door Lock Locking Control | 1-1964 394 | 23-13-37 |
| 24 | Clip, Rod End to Door Lock (Rear, Right) | 1-6008 144 | 23-13-17 |
| 25 | Tube, Rear Door (3/16" I.D. x 120" Long) | 2-1964 206 | 23-13-10 |
| 26 | Knob, Rear Door Lock Locking Control | 1-1964 394 | 23-13-37 |
| 27 | Clip, Rod End to Door Lock (Rear, Left) | 1-6008 145 | 23-13-17 |
| 28 | Plate, De-Activator Valve (Plymouth only)(use with swivel seat) | | Not Serv. |
| 29 | Support, Front Seat De-Activator Valve (Plymouth only)(use with swivel seat) | 1-1964 522 | 23-13-8 |
| 30 | Plate, De-Activator Valve (Plymouth only)(use with Saginaw type seat springs) | | Not Serv. |
| 31 | Support, Front Seat De-Activator Valve (Ply. only)(use with L.A. Young type seat Springs) | 1-1964 425 | 23-13-8 |
| 32 | Plate, De-Activator Valve (Ply. only)(use with L.A. Young type seat springs) | | Not Serv. |
| 33 | Support, Front Seat De-Activator Valve (Ply. only)(use with Saginaw type seat Springs) | 1-1964 504 | 23-13-8 |
| 34 | Unit, Rear Door Power, w/Rod (except Dodge 3-Seat Suburbans, Left) | 1-1964 919 | 23-13-6 |
| | (Dodge 3-Seat Suburbans, Left) | 1-2165 778 | |
| 35 | Clamp | ★-2165 090 | 23-13-25 |
| 36 | Clamp | | Not Serv. |
| 37 | Valve, Front Seat De-Activator (Plymouth only) | 1-1964 190 | 23-13-7 |
| 38 | Connector, Tube (Plymouth only - 1/8" x 1/8") | 1-1964 881 | 23-13-13 |
| 39 | Unit, Front Door Power (Left) | 1963 197 | 23-13-6 |
| 40 | Clamp | ★-2165 090 | 23-13-25 |
| 41 | Clamp | | Not Serv. |
| 42 | Tube, Distributor Valve to De-Activator Valve (Ply. only-1/8" I.D. x 126" Long) | 2-1964 708 | 23-13-10 |
| 43 | Tube, Front Door (3/16" I.D. x 79" Long) | 2-1964 203 | 23-13-10 |
| 44 | Knob | | 23-67-194 |
| 45 | Switch | | 1-82-41 |
| 46 | Tube, Front Door (3/16" I.D. x 79" Long) | 2-1964 203 | 23-13-10 |
| 47 | Tube, Rear Door (3/16" I.D. x 120" Long) | 2-1964 206 | 23-13-10 |
| 48 | Tee, Tube (3/16" x 3/16" x 1/4") | ★-1964 610 | 23-13-13 |
| 49 | Tube, Distributor Valve to Main Tee (1/4" I.D. x 29" Long) | 2-1964 573 | 23-13-10 |
| 50 | Grommet | 1-2097 815 | 1-82-28 |
| 51 | Nozzle, Windshield Washer (PY1) | 2-1887 319 | 1-82-6 |
| | (except PY1) | 2-1887 321 | 1-82-6 |
| 52 | Tube, Floor Pan (Left, 1/4" I.D. x 29" Long) | 2-1964 573 | |
| 53 | Tee, Windshield Washer Hose | 1-1523 160 | 1-82-8 |
| | Hose, Tee to Nozzle, Right | 1-2096 623 | 1-82-44 |
| | Hose, Tee to Nozzle, Left | 1-2096 623 | 1-82-44 |
| 54 | Tee, Tube (1/4" x 1/4" x 1/4") | 2-1964 609 | 23-13-13 |
| 55 | Grommet | | Not Serv. |
| 56 | Hose, Windshield Washer | 1-2096 623 | 1-82-44 |
| 57 | Connector, Vacuum Control | 1-2121 942 | 1-82-48 |
| 58 | Nozzle, Windshield Washer (PY1) | 2-1887 319 | 1-82-6 |
| | (except PY1) | 2-1887 321 | 1-82-6 |
| 59 | Hose, Tank to Manifold Tee (1/4" I.D. x 76" Long) | 1-1887 477 | 23-13-50 & 1-82-44 |
| 60 | Tank, w/Bracket | 1-2096 822 | 23-13-45 |
| 61 | Tee, Tank Hose (5/16" x 5/16" x 5/16") | 1-2097 209 | 23-13-51 |
| 62 | Reservoir | 1-2096 688 | 1-82-4 |
| 63 | Bracket, Reservoir Mounting | | Not Serv. |

**PARTS INDICATED BY NAME ONLY - ORDER BY DESCRIPTION**



MyMopar.com

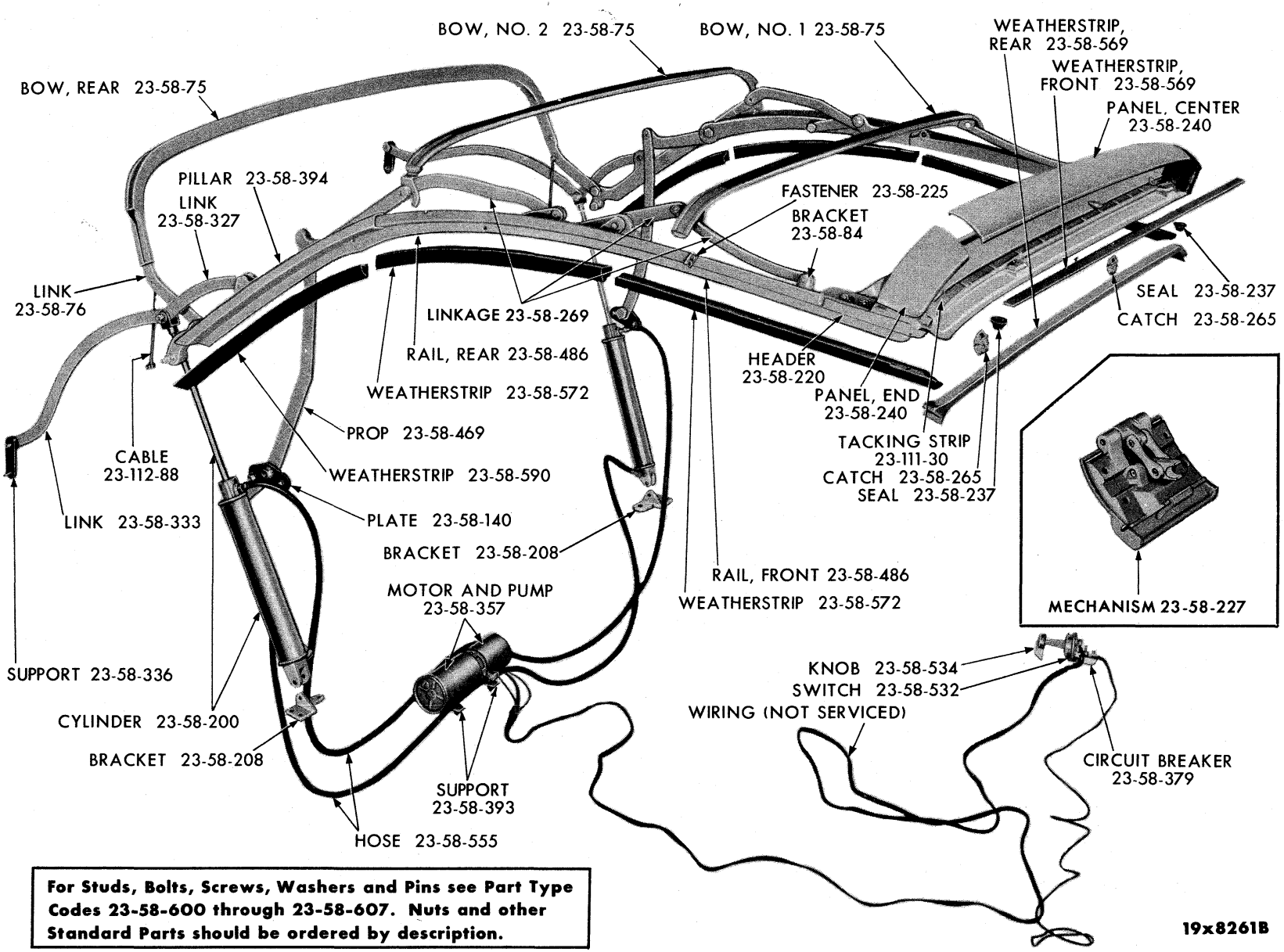


**For Studs, Bolts, Screws, Washers and Pins see Part Type Codes 23-58-600 through 23-58-607. Nuts and other Standard Parts should be ordered by description.**

CONVERTIBLE COUPE FOLDING TOP - EXCEPT IMPERIAL PY1

MyMopar.com

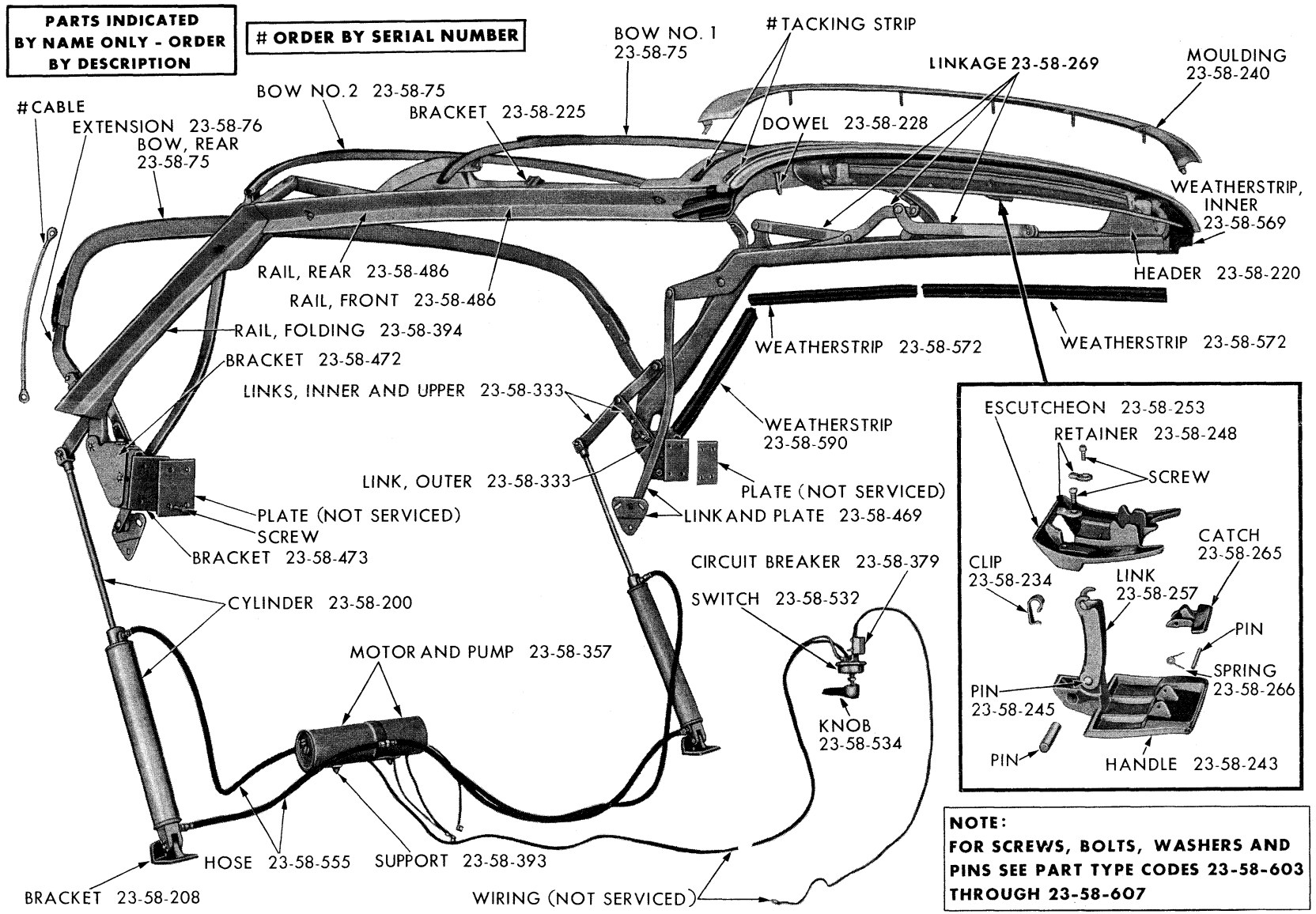


CONVERTIBLE COUPE FOLDING TOP - IMPERIAL PY1

MyMopar.com

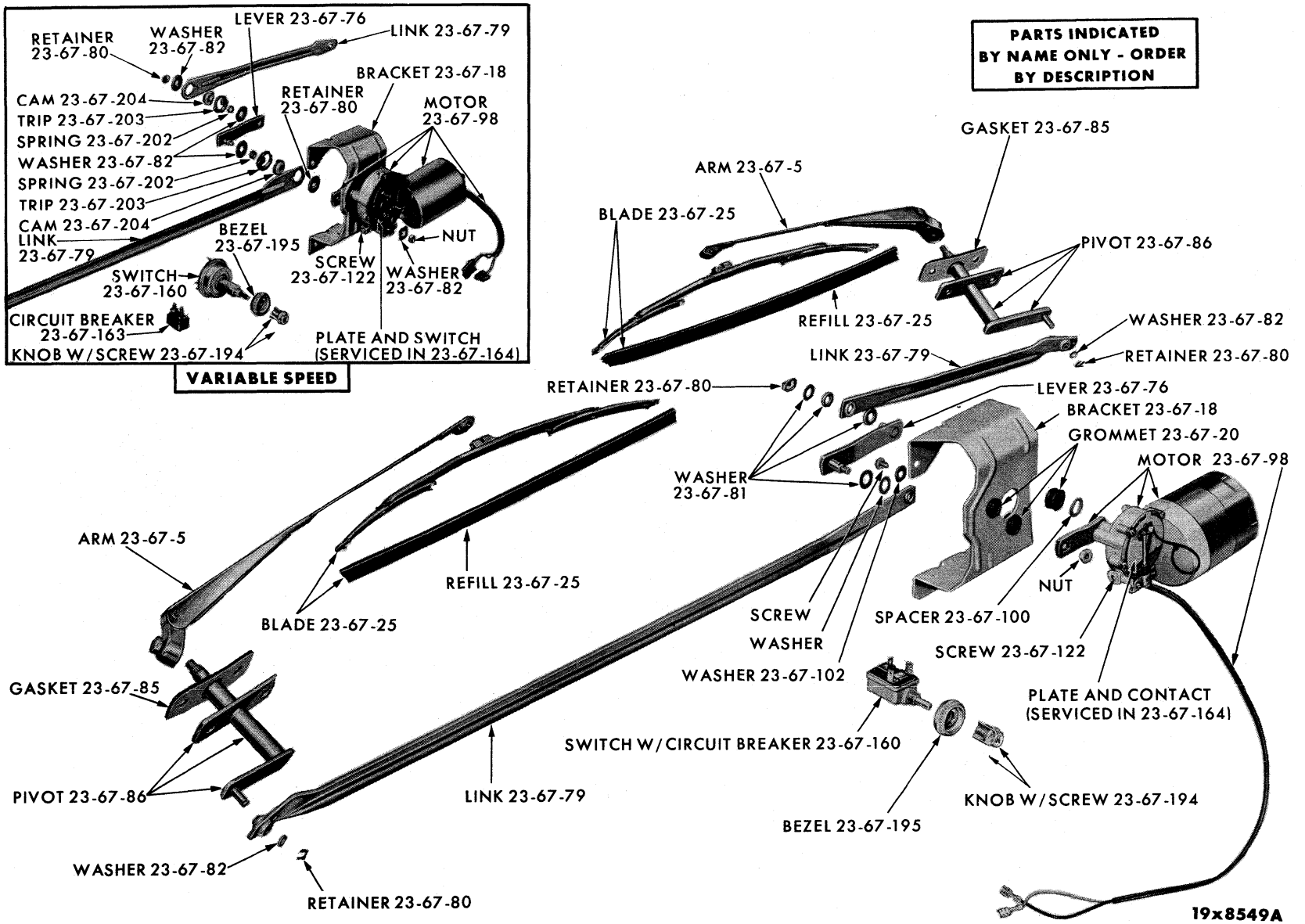


WINDSHIELD WIPER - EXCEPT IMPERIAL PY1

MyMopar.com

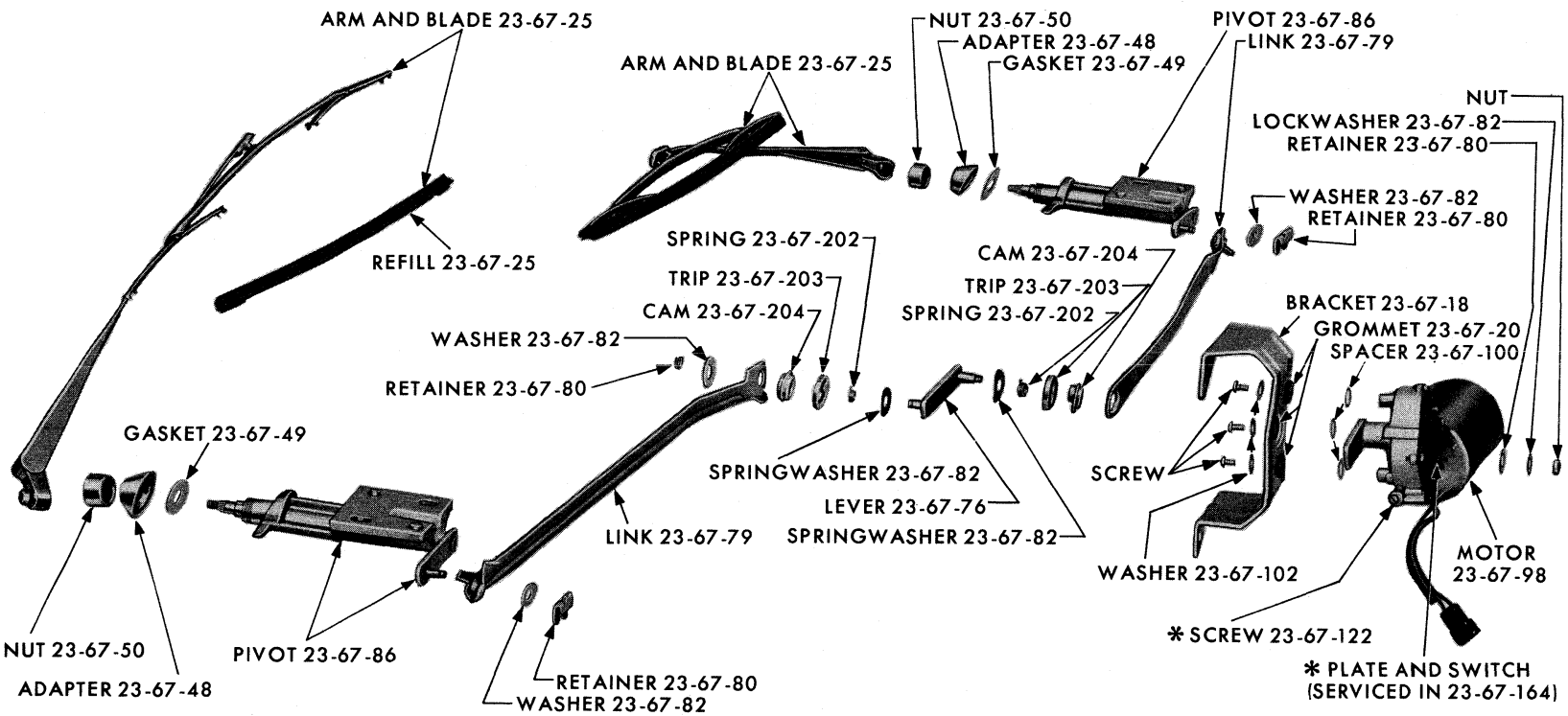


*** ALSO SERVICED IN 23-67-98**

**PARTS INDICATED BY NAME ONLY ARE STANDARD PARTS —ORDER BY DESCRIPTION.**

19x8542B

WINDSHIELD WIPER - IMPERIAL PY1

MyMopar.com

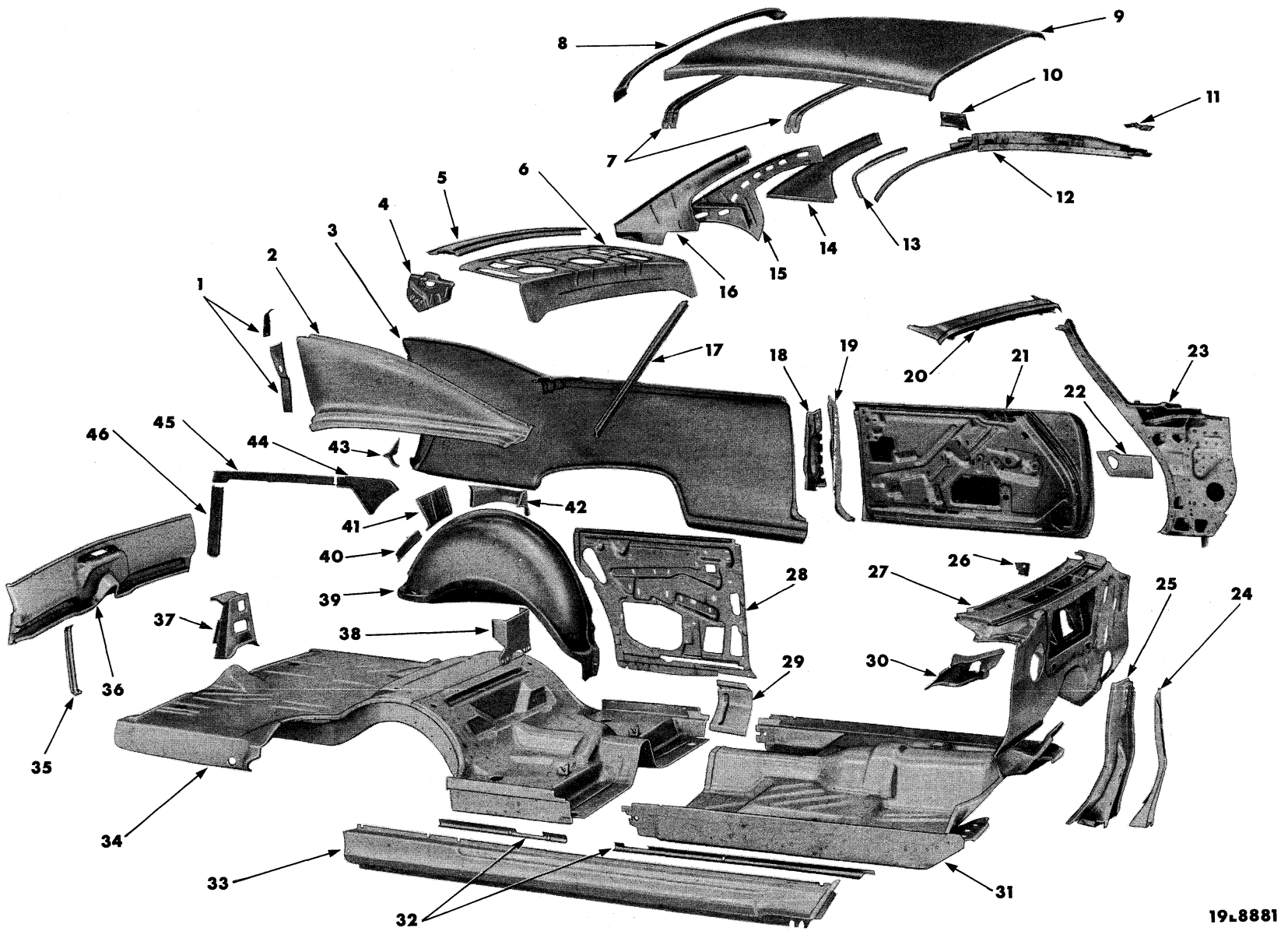


BODY - PLYMOUTH PP1-2 SPECIAL CLUB COUPE

MyMopar.com

## BODY - PLYMOUTH PP1-2 SPECIAL CLUB COUPE

| Ref. No. | Name | Part Type Code |
|---|---|---|
| 1 | Reinforcement | 8-55-23 |
| 2 | Panel | 23-34-233 |
| 3 | Panel | 23-34-235 |
| 4 | Support | 23-19-82 |
| 5 | Panel | 23-34-166 |
| 6 | Shelf Panel | Not Serviced |
| 7 | Bow | |
| 8 | Frame | 23-64-66 |
| 9 | Roof Panel | 23-34-301 |
| 10 | Extension | 23-64-68 |
| 11 | Reinforcement | Not Serviced |
| 12 | Rail | 23-40-85 |
| 13 | Trough | 23-59-56 |
| 14 | Extension | 23-34-280 |
| 15 | Gusset | 23-64-70 |
| 16 | Brace | 23-40-97 |
| 17 | Brace | Not Serviced |
| 18 | Reinforcement (Serviced in 23-36-53) | |
| 19 | Pillar | 23-36-53 |
| 20 | Header & Reinforcement | 23-34-354 |
| 21 | Door Shell | 23-11-1 |
| 22 | Bracket (Serviced in 23-34-80) | |
| 23 | Cowl Side Panel | 23-34-80 |
| 24 | Support Brace | Not Serviced |
| 25 | Brace (Serviced in 23-34-80) | |
| 26 | Bracket | Not Serviced |
| 27 | Dash Panel (Serviced in 23-34-80) | |
| 28 | Panel | 23-34-234 |
| 29 | Tie Plate | Not Serviced |
| 30 | Brace (Serviced in 23-34-80) | |
| 31 | Front Floor Pan | |
| 32 | Reinforcement | Not Serviced |
| 33 | Panel | 23-51-5 |
| 34 | Rear Floor Pan (Complete) | 23-32-48 |
| 35 | Support | Not Serviced |
| 36 | Panel | 23-34-167 |
| 37 | Support | 23-19-74 |
| 38 | Bracket | Not Serviced |
| 39 | Panel | 23-34-27 |
| 40 | Support | Not Serviced |
| 41 | Support | 23-19-82 |
| 42 | End Panel (Serviced in 23-34-354) | |
| 43 | Support | 23-34-285 |
| 44 | Support | Not Serviced |
| 45 | Reinforcement | 23-34-177 |
| 46 | Brace | Not Serviced |

PARTS INDICATED BY NAME ONLY - ORDER BY DESCRIPTION



MyMopar.com

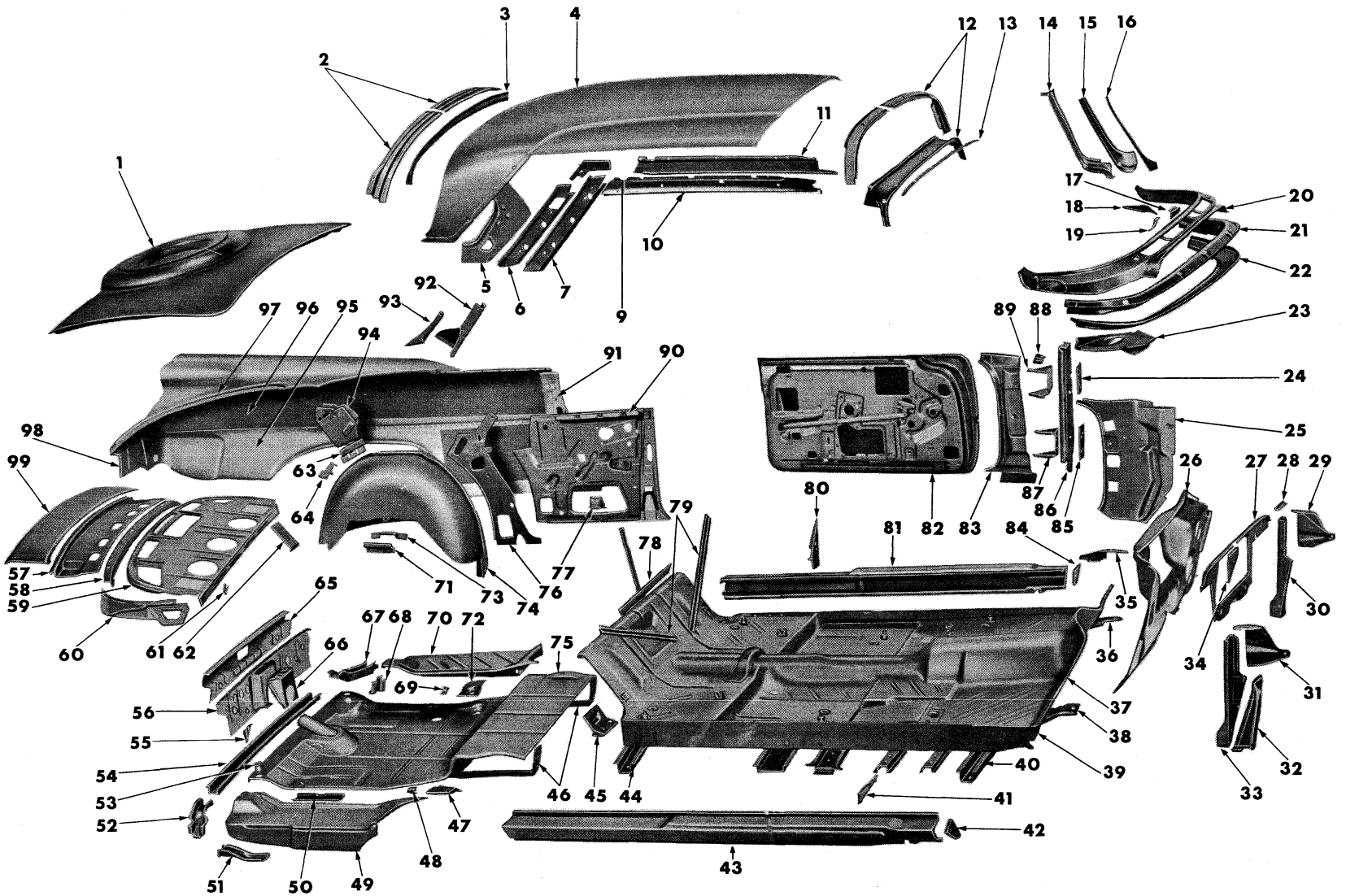


BODY - IMPERIAL PY1 SPECIAL CLUB COUPE

MyMopar.com

## BODY - IMPERIAL PY1 SPECIAL CLUB COUPE

| Ref. No. | Name | Part Type Code |
|---|---|---|
| 1 | Deck Lid | 23-19-8 |
| 2 | Rear Window Opening Upper Frame Reinforcement | 23-64-67 |
| 3 | Rear Window Opening Upper Frame. | 23-64-66 |
| 4 | Roof Panel | 23-34-301 |
| 5 | Rear Window Side Frame | 23-64-66 |
| 6 | Roof Side Rear Outer Rail | 23-40-85 |
| 7 | Roof Side Rear Inner Rail | 23-40-85 |
| 8 | Roof Side Inner Front Rail to Roof Side Rear Rail Gusset | Not Serviced |
| 9 | Panel, Roof | 23-34-301 |
| 10 | Roof Side Rail | 23-40-85 |
| 11 | Roof Side Rail | 23-40-85 |
| 12 | Windshield Opening Upper Frame (Serviced in 23-34-80) | |
| 13 | Windshield Header Trim Retainer (Serviced in 23-34-80) | |
| 14 | Front Hinge Pillar Extension (Serviced in 23-34-80) | |
| 15 | Windshield Opening Side Frame (Serviced in 23-34-80) | |
| 16 | Cowl Top Panel Extension (Serviced in 23-34-80) | |
| 17 | Dash Panel Brake Bellow Reinforcement Assy. | Not Serviced |
| 18 | Dash Panel Hood Support to Front Pillar (Serviced in 23-34-80) | |
| 19 | Front Pillar to Fender Support Upper Bracket | Not Serviced |
| 20 | Cowl Top Panel (Serviced in 23-34-80) | |
| 21 | Windshield Opening Lower Frame (Serviced in 23-34-80) | |
| 22 | Windshield Opening Lower Frame Reinforcement (Serviced in 23-34-80) | |
| 23 | Front Pillar to Cowl Side Filler (Serviced in 23-34-80) | |
| 24 | Front Pillar Door Hinge Tapping Plate | 23-15-13 |
| 25 | Cowl Side Panel | 23-34-80 |
| 26 | Dash Panel | 23-34-110 |
| 27 | Dash Panel Air Duct Cover | 23-34-116 |
| 28 | Cowl Top Panel Hood Seal Support (Serviced in 23-34-80) | |
| 29 | Hood Hinge Support and Clinch Nut (Serviced in 23-34-80) | |
| 30 | Dash Panel No. 1 & 1A Body Bolt Brace and Clinch Nut | 23-34-122 |
| 31 | Hood Hinge Support and Clinch Nut (Serviced in 23-34-80) | |
| 32 | Dash Panel No. 1 & 1A Body Bolt Brace and Clinch Nut Reinforcement | 23-34-126 |
| 33 | Dash Panel No. 1 & 1A Body Bolt Brace and Clinch Nut | 23-34-122 |
| 34 | Windshield Wiper Motor Mounting Reinforcement | 23-67-129 |
| 35 | Dash Panel Hood Hinge Support to Front Cowl Filler Reinforcement | Not Serviced |
| 36 | No. 1 to No. 2 Body Bolt Strainer | Not Serviced |
| 37 | Front Floor Pan | Not Serviced |
| 38 | No. 1 to No. 2 Body Bolt Strainer | Not Serviced |
| 39 | Body Side Inner Sill | 23-51-5 |
| 40 | Body Floor Pan Reinforcement | Not Serviced |
| 41 | Front Floor Seat Track Reinforcement | Not Serviced |
| 42 | Body Side Sill Front End Cover | 23-51-8 |
| 43 | Body Side Outer Sill | 23-51-5 |
| 44 | Body Floor Pan Reinforcement | Not Serviced |
| 45 | Axle Drive Pinion Carrier Bumper Reinforcement | Not Serviced |
| 46 | Fuel Tank Rear Floor Pan Reinforcement | Not Serviced |
| 47 | No. 5 Body Bolt Floor Pan Reinforcement | Not Serviced |
| 48 | Fuel Tank Hanger | Not Serviced |
| 49 | Rear Floor Pan Side Extension | 23-32-49 |
| 50 | Floor Pan Spare Wheel Bracket Reinforcement | Not Serviced |
| 51 | Fuel Tank Rear Floor Pan Reinforcement Extension | Not Serviced |
| 52 | No. 6 Body Bolt Floor Pan Reinforcement Extension | Not Serviced |
| 53 | No. 6 Body Bolt Reinforcement to Floor Pan Spacer | 23-05-36 |
| 54 | No. 6 Body Bolt Floor Pan Reinforcement | Not Serviced |
| 55 | Deck Opening Lower Panel Drain Trough Support | Not Serviced |
| 56 | Deck Opening Lower Panel Reinforcement | 23-34-179 |
| 57 | Deck Opening Upper Panel Reinforcement (Serviced in 23-34-166) | |
| 58 | Belt Center Bar (Serviced in 23-34-166) | |
| 59 | Shelf Panel | Not Serviced |
| 60 | Belt Side Bar | 23-51-41 |
| 61 | Rear Seat Back Hanger | Not Serviced |
| 62 | Shelf Panel to Wheelhouse Gusset. | Not Serviced |
| 63 | Deck Lid Hinge Support to Wheelhouse Bracket | Not Serviced |
| 64 | Wheelhouse Jack Stowage Bracket. | Not Serviced |
| 65 | Deck Opening Lower Panel | 23-34-167 |
| 66 | Deck Opening Lower Panel Lock Support | 23-19-74 |
| 67 | No. 6 Body Bolt Floor Pan Reinforcement | Not Serviced |
| 68 | Rear Floor Pan Jack Stowage Bracket | Not Serviced |
| 69 | Spare Wheel Anchor Stud Bracket. | Not Serviced |
| 70 | Rear Floor Pan Side Extension | 23-32-49 |
| 71 | Deck Lid Hinge Support to Wheelhouse Lower Bracket | Not Serviced |
| 72 | No. 5 Body Bolt Floor Pan Reinforcement | Not Serviced |
| 73 | Deck Lid Hinge Support to Wheelhouse Bracket | 23-19-76 |
| 74 | Wheelhouse Panel Assy. | 23-34-27 |
| 75 | Rear Floor Pan. | 23-32-48 |
| 76 | Quarter Inside Panel to Wheelhouse Reinforcement | 23-34-249 |
| 77 | Quarter Window Lower Stop Support | 23-64-12 |
| 78 | Shelf Panel to Floor Center Brace Support | Not Serviced |
| 79 | Shelf Panel to Floor Brace | Not Serviced |
| 80 | Quarter Inside Panel to Seat Riser Brace | Not Serviced |
| 81 | Body Side Sill Outer Panel | 23-51-5 |
| 82 | Door Shell. | 23-11-1 |
| 83 | Front Pillar, Rear Half (Serviced in 23-34-80) | |
| 84 | Body Side Sill Front End Cover and Clinch Nut | Not Serviced |
| 85 | Front Pillar Door Hinge Tapping Plate | 23-15-13 |
| 86 | Front Pillar Front Half (Serviced in 23-34-80) | |
| 87 | Front Pillar Lower Hinge Reinforcement (Serviced in 23-34-80) | |
| 88 | Windshield Opening Lower Frame to Upper Steering Column Bracket (Serviced in 23-34-80) | |
| 89 | Front Pillar Upper Hinge Reinforcement (Serviced in 23-34-80) | |
| 90 | Quarter Inner Panel Assembly | 23-34-234 |
| 91 | Body Lock Pillar | 23-36-53 |
| 92 | Roof Side Rail Extension | 23-40-92 |
| 93 | Rear Window Side Frame to Wheelhouse Extension. | Not Serviced |
| 94 | Deck Lid Hinge Body Bracket Support | 23-19-82 |
| 95 | Quarter Outside Panel Lower | 23-34-235 |
| 96 | Quarter Outside Panel Upper | 23-34-235 |
| 97 | Quarter Outside Rear Panel or Extension | 23-34-233 |
| 98 | Deck Opening Lower Panel Side Extension | 23-34-176 |
| 99 | Deck Opening Upper Panel | 23-34-166 |



MyMopar.com

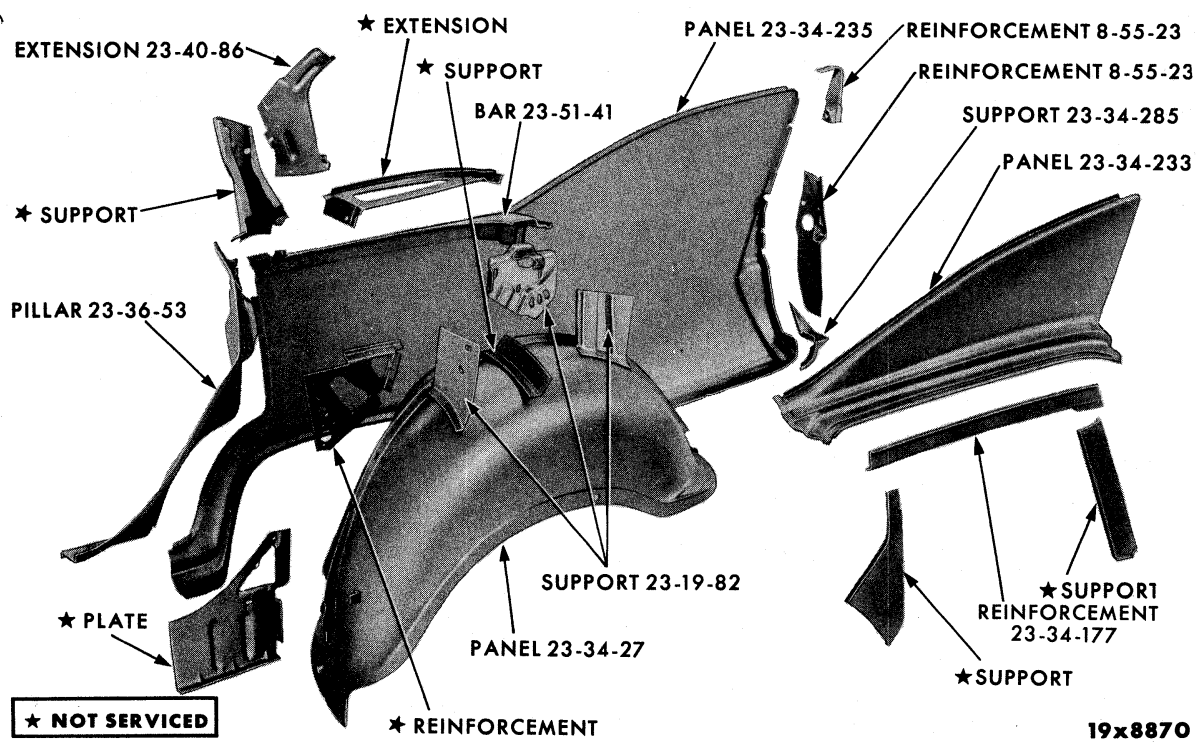


REAR QUARTER PANEL - PLYMOUTH PP1-2 4 DOOR SEDAN AND SPECIAL 4 DOOR SEDAN

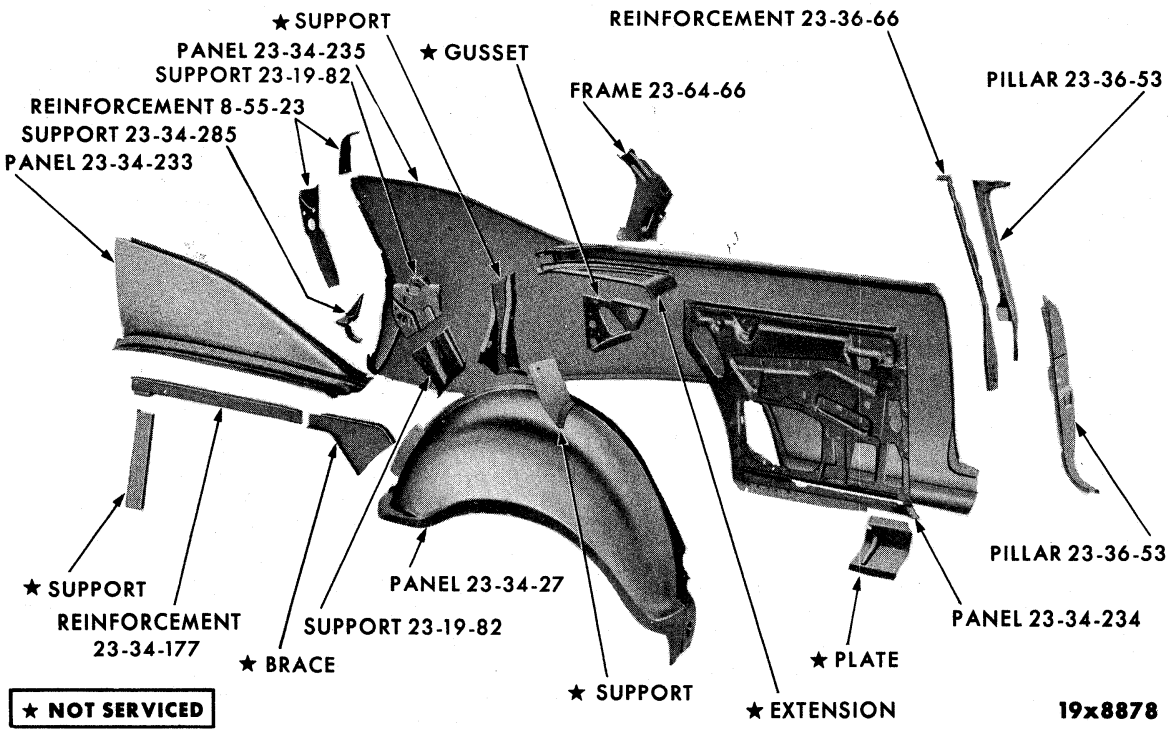


REAR QUARTER PANEL - PLYMOUTH PP1-2 CLUB SEDAN



MyMopar.com

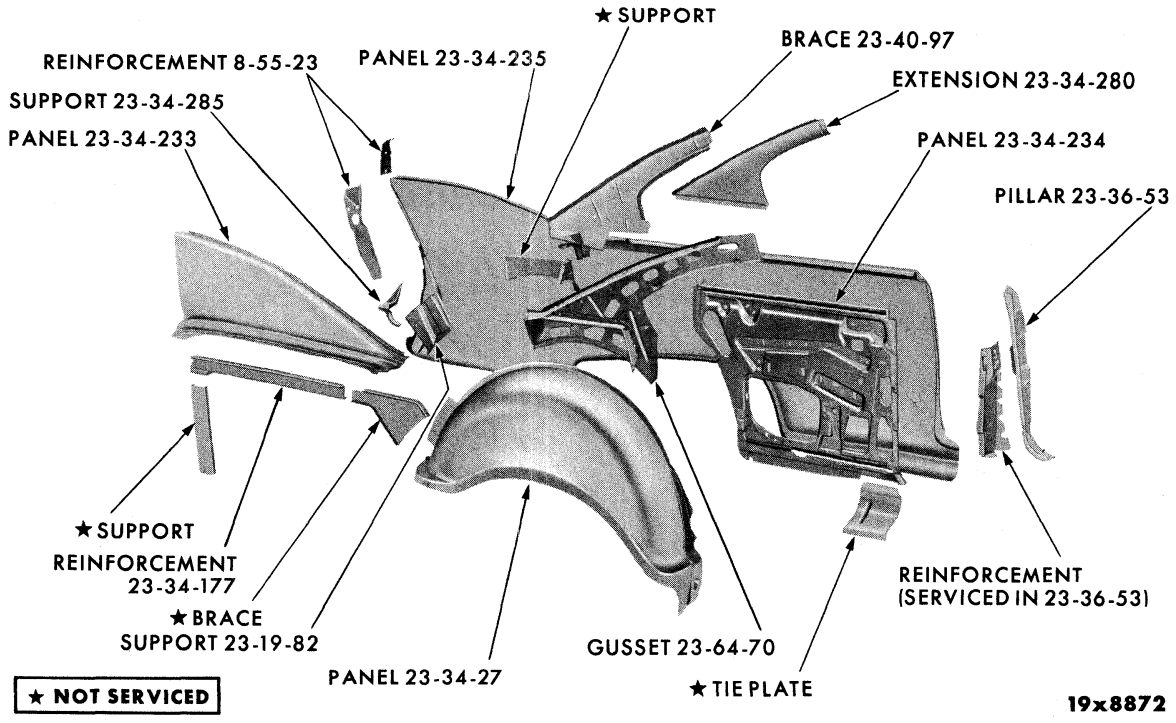


REAR QUARTER PANEL - PLYMOUTH PP1-2 SPECIAL CLUB COUPE

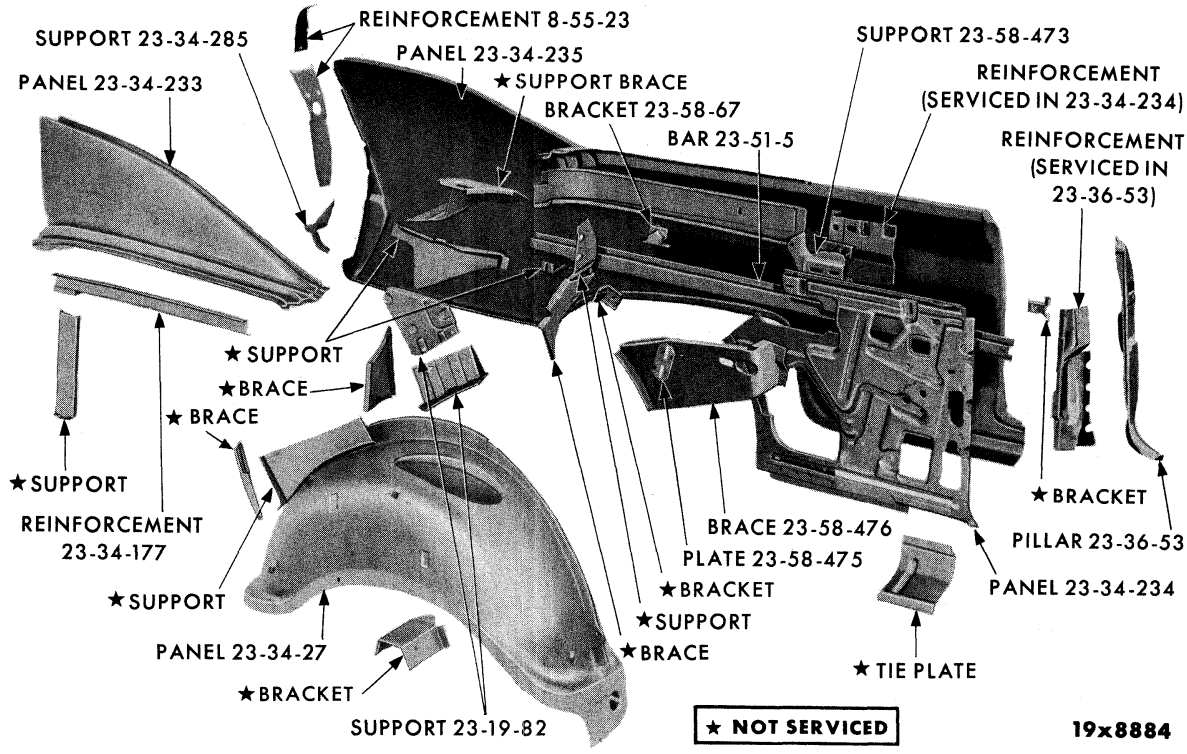


REAR QUARTER PANEL - PLYMOUTH PP1-2 CONVERTIBLE COUPE



MyMopar.com

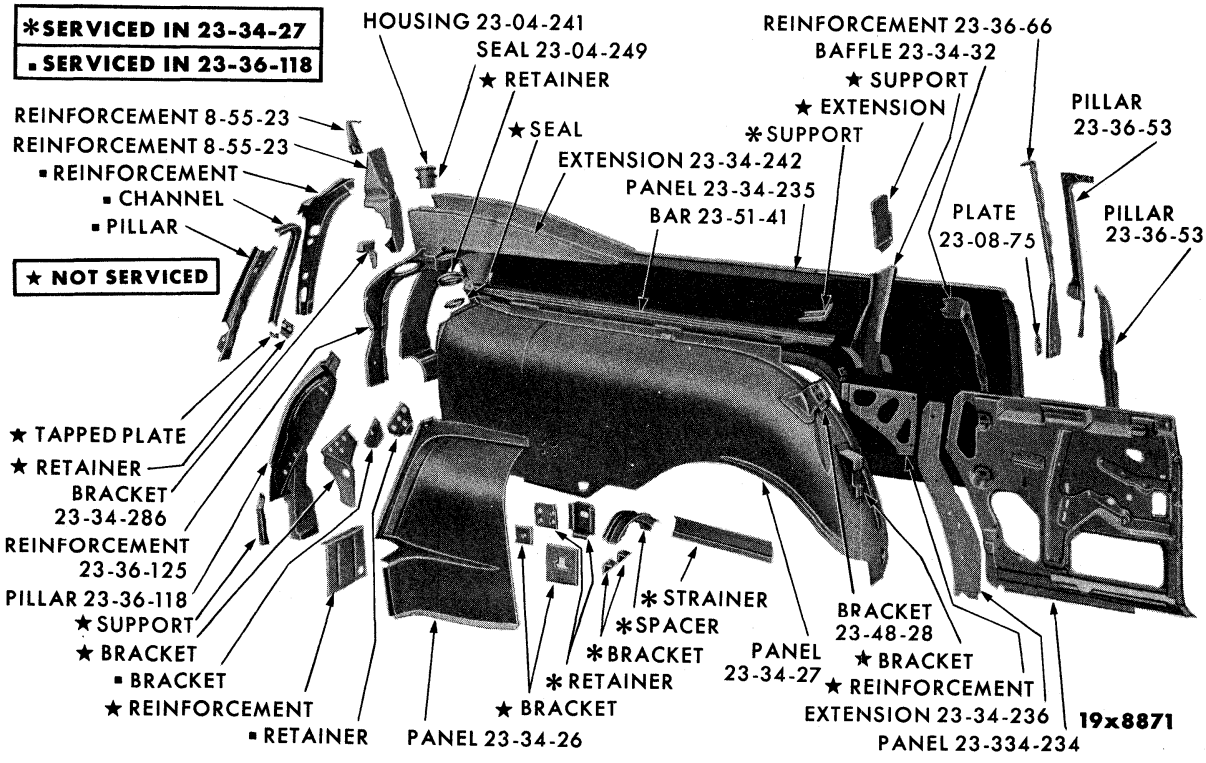


REAR QUARTER PANEL - PLYMOUTH PP1-2 2 DOOR SUBURBAN

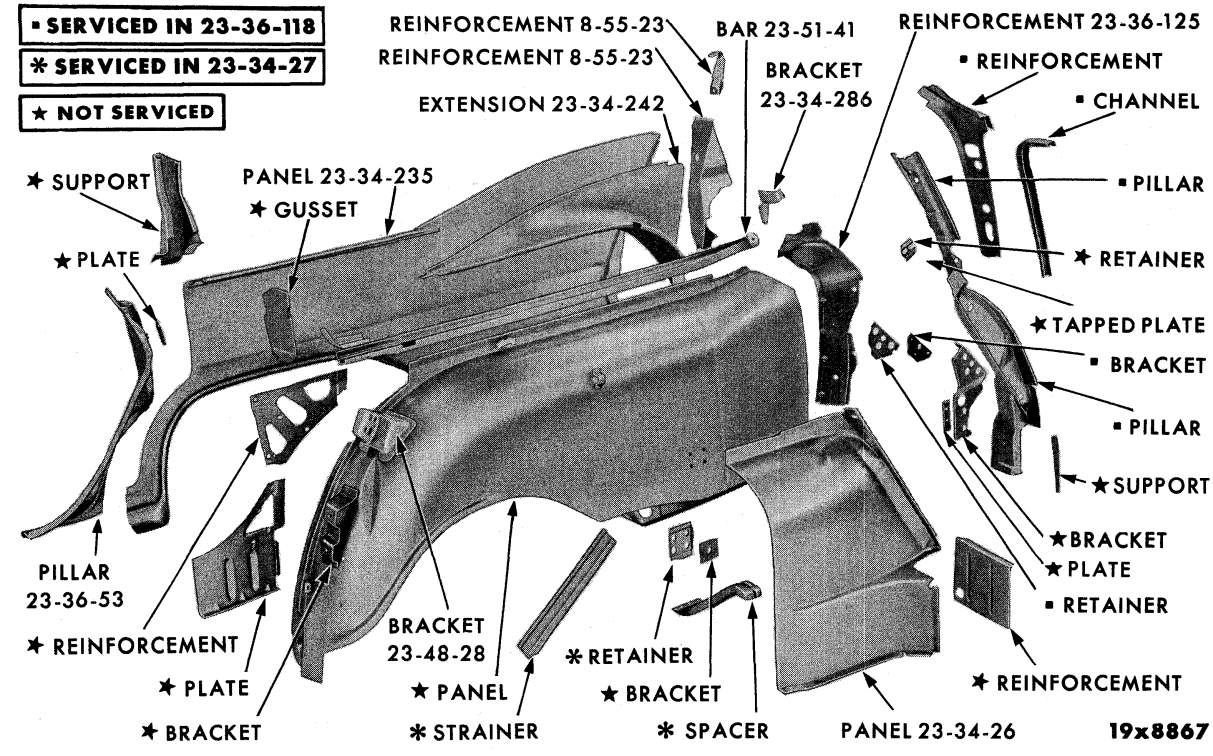


REAR QUARTER PANEL - PLYMOUTH PP1-2 4 DOOR SUBURBAN



MyMopar.com

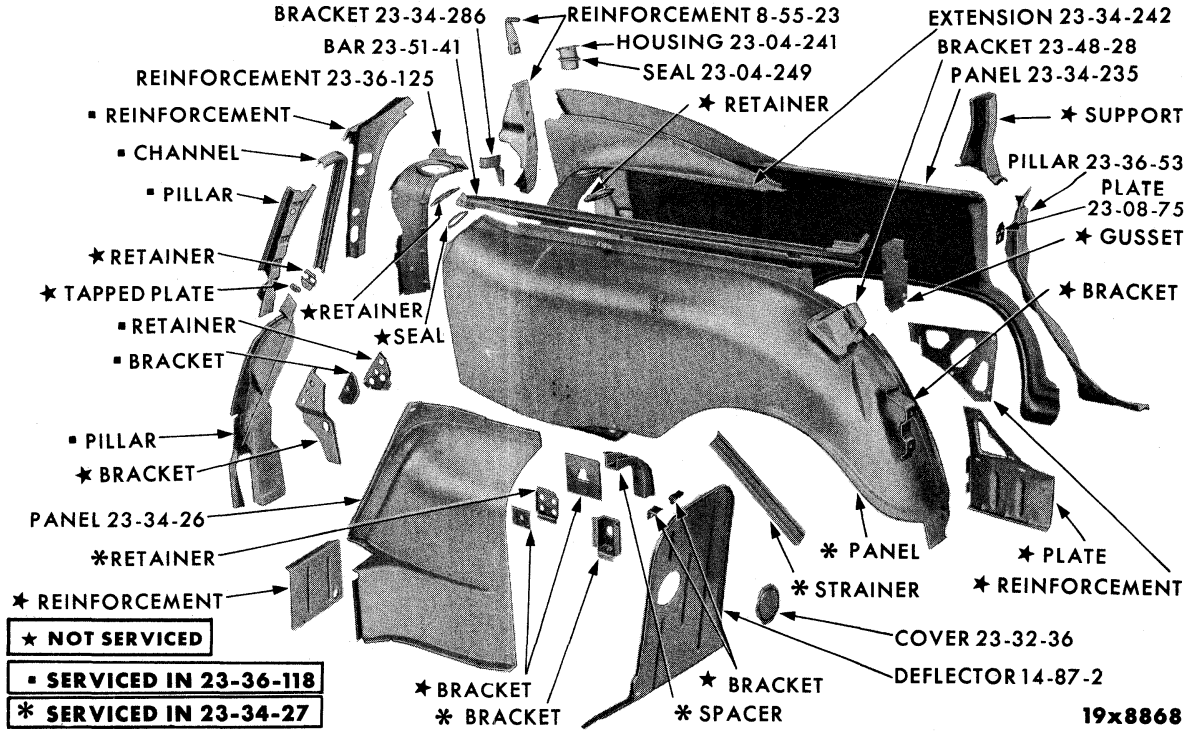


REAR QUARTER PANEL - PLYMOUTH PP1-2 4 DOOR SUBURBAN (LEFT-GAS TANK SIDE)

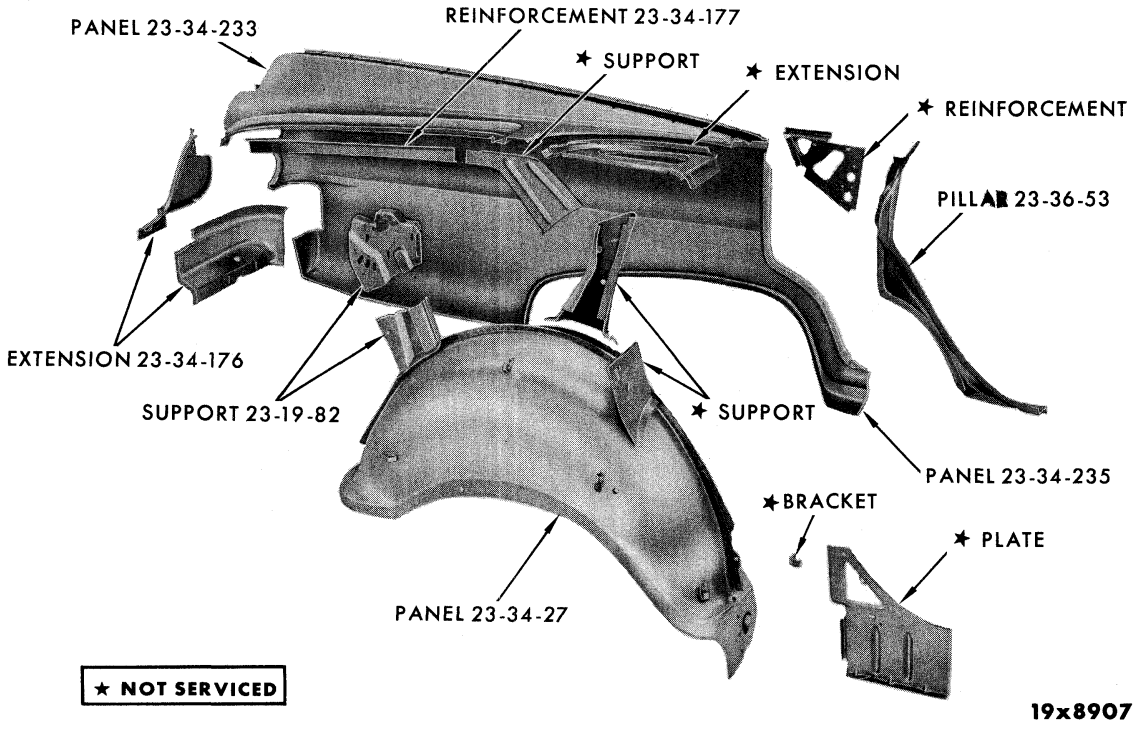


REAR QUARTER PANEL - DODGE PD3-4 4 DOOR SEDAN AND SPECIAL 4 DOOR SEDAN



MyMopar.com

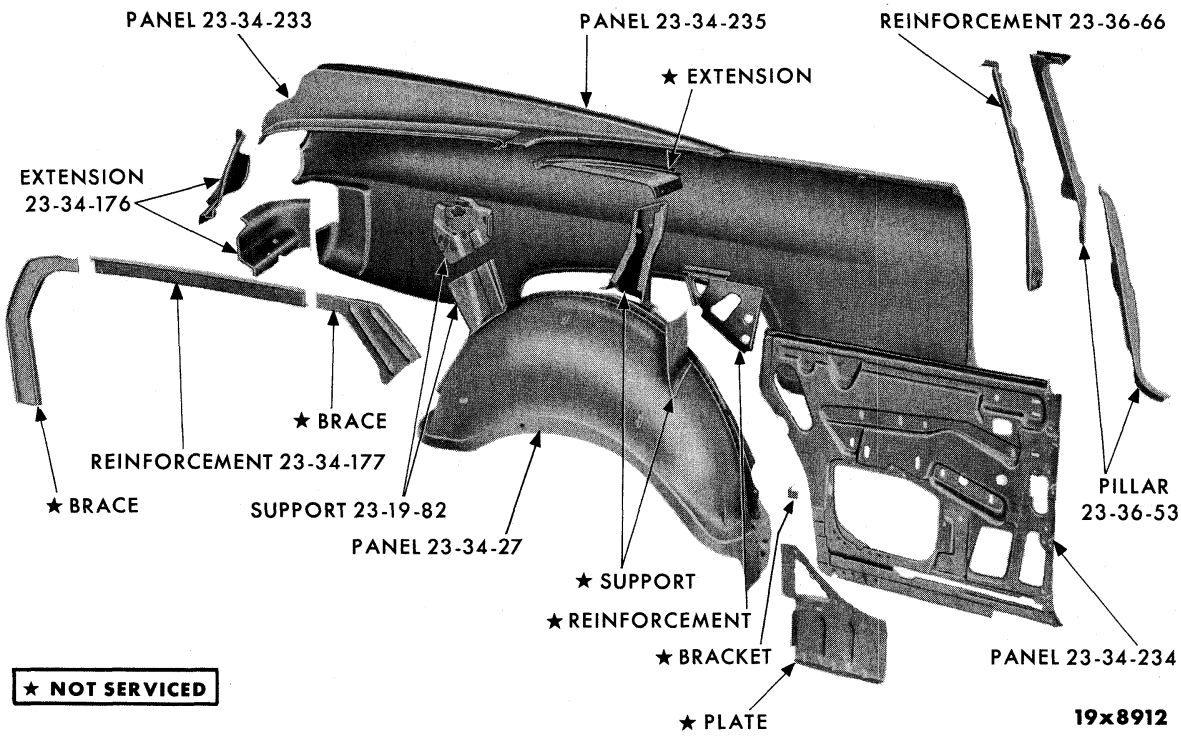


REAR QUARTER PANEL - DODGE PD3-4 CLUB SEDAN

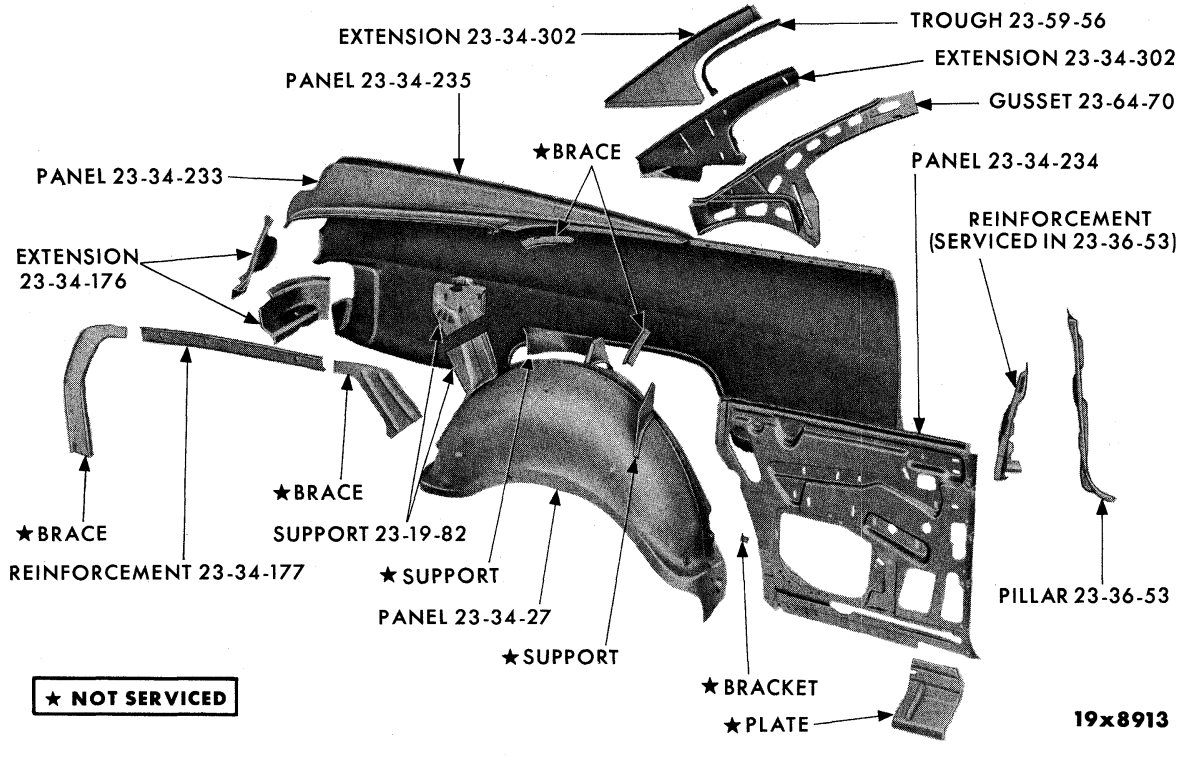


REAR QUARTER PANEL - DODGE PD3-4 SPECIAL CLUB COUPE



MyMopar.com

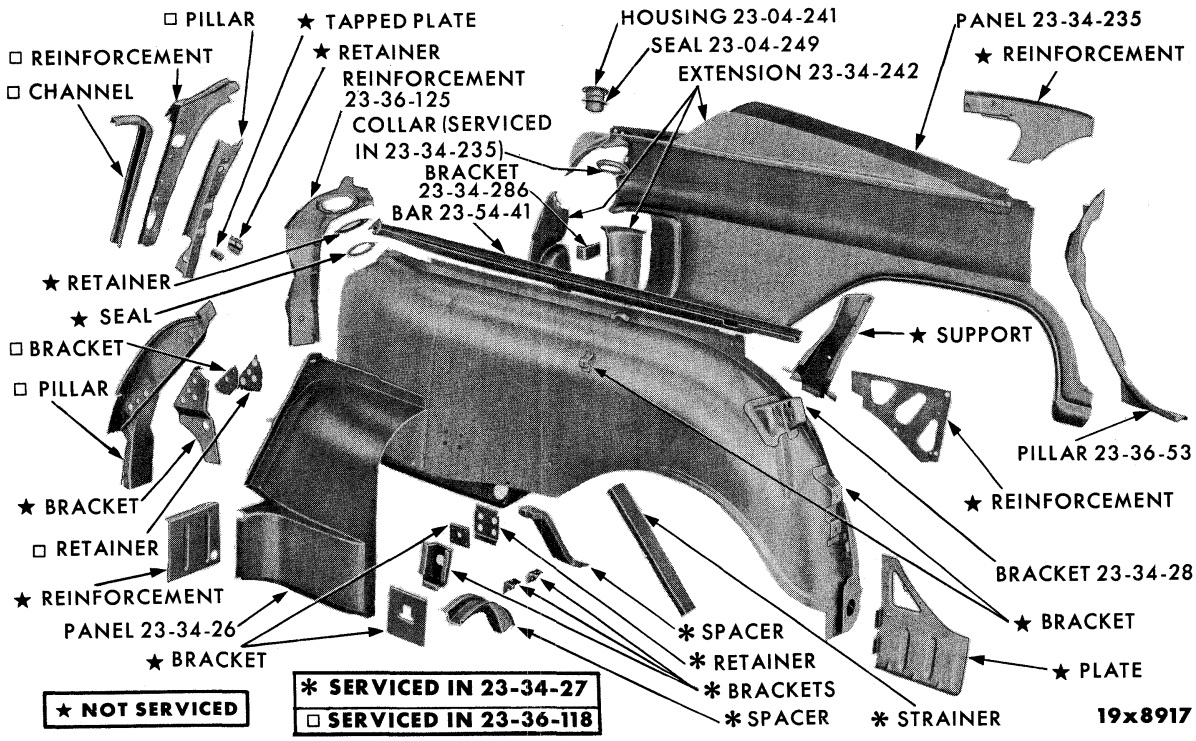


REAR QUARTER PANEL - DODGE PD3-4 4 DOOR SUBURBAN

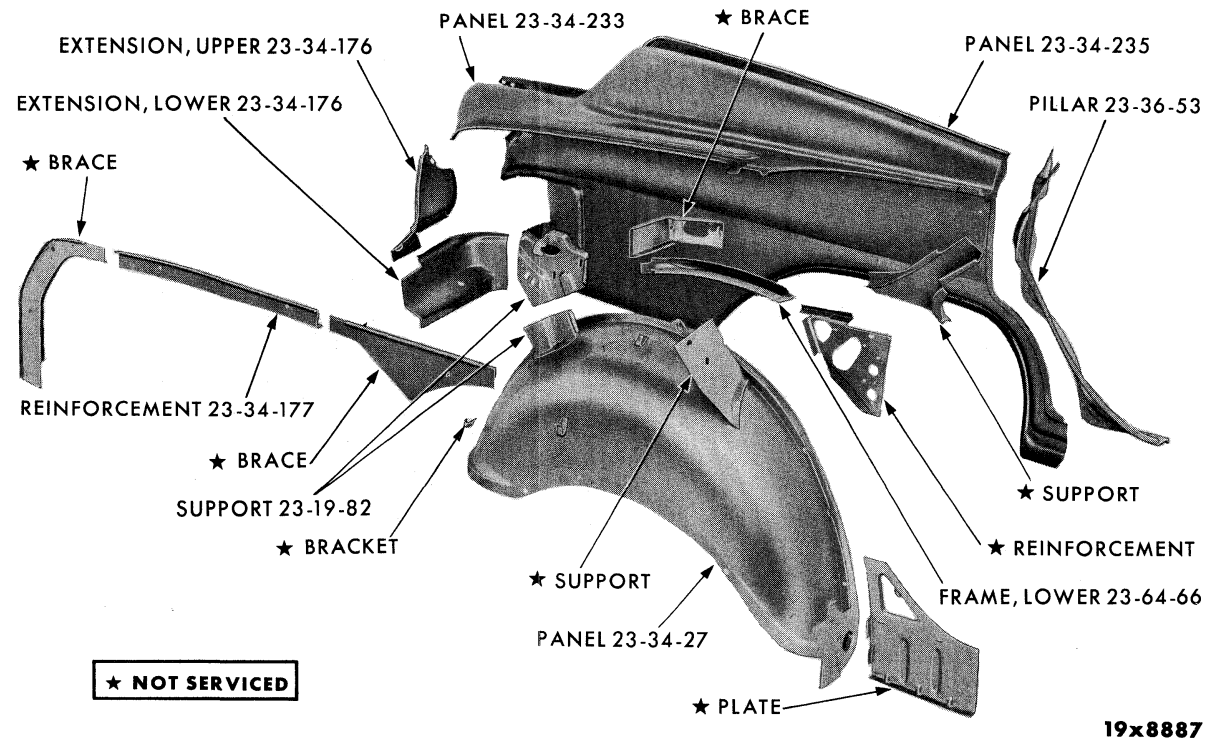


REAR QUARTER PANEL - DODGE PD1-2 4 DOOR SEDAN AND SPECIAL 4 DOOR SEDAN



MyMopar.com

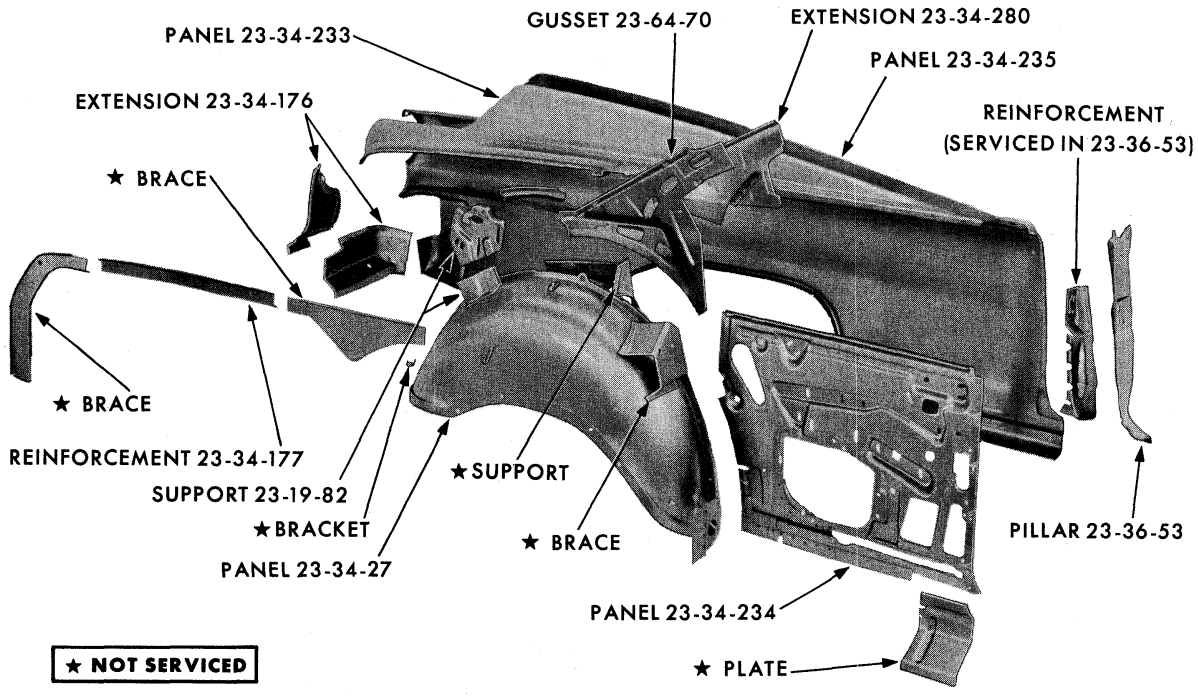


REAR QUARTER PANEL - DODGE PD1-2 SPECIAL CLUB COUPE

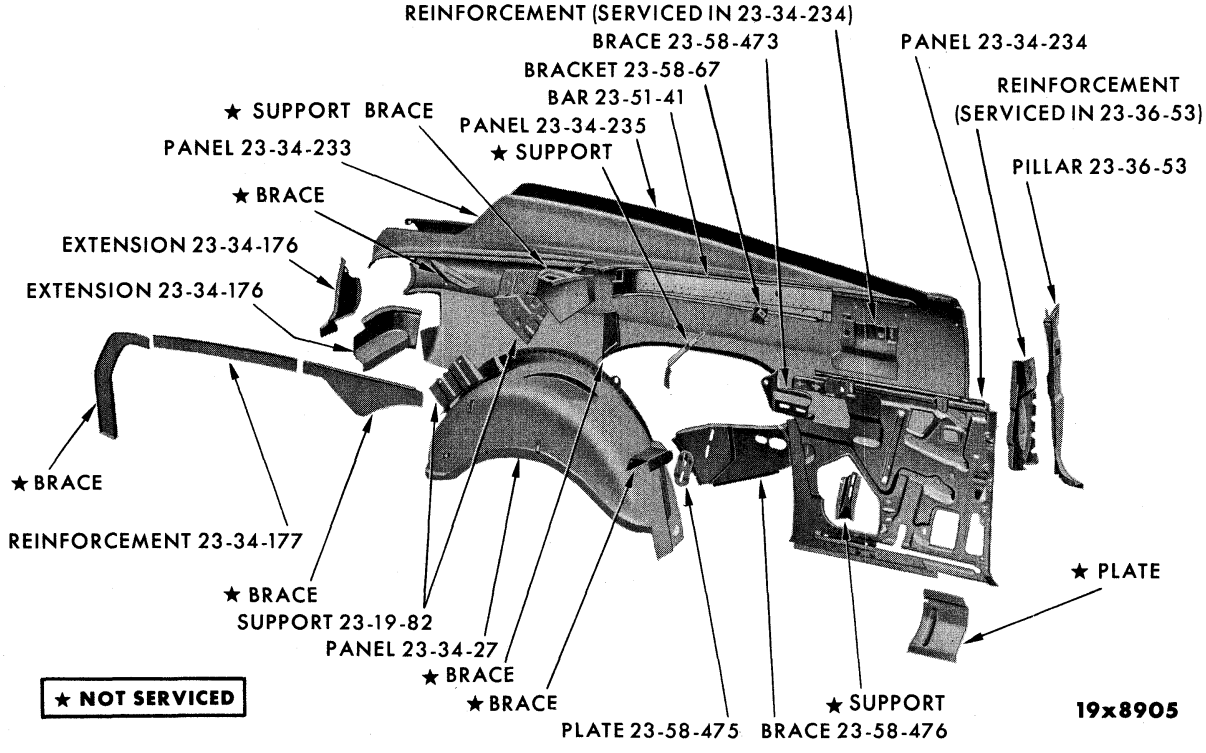


REAR QUARTER PANEL - DODGE PD1-2 CONVERTIBLE COUPE



MyMopar.com

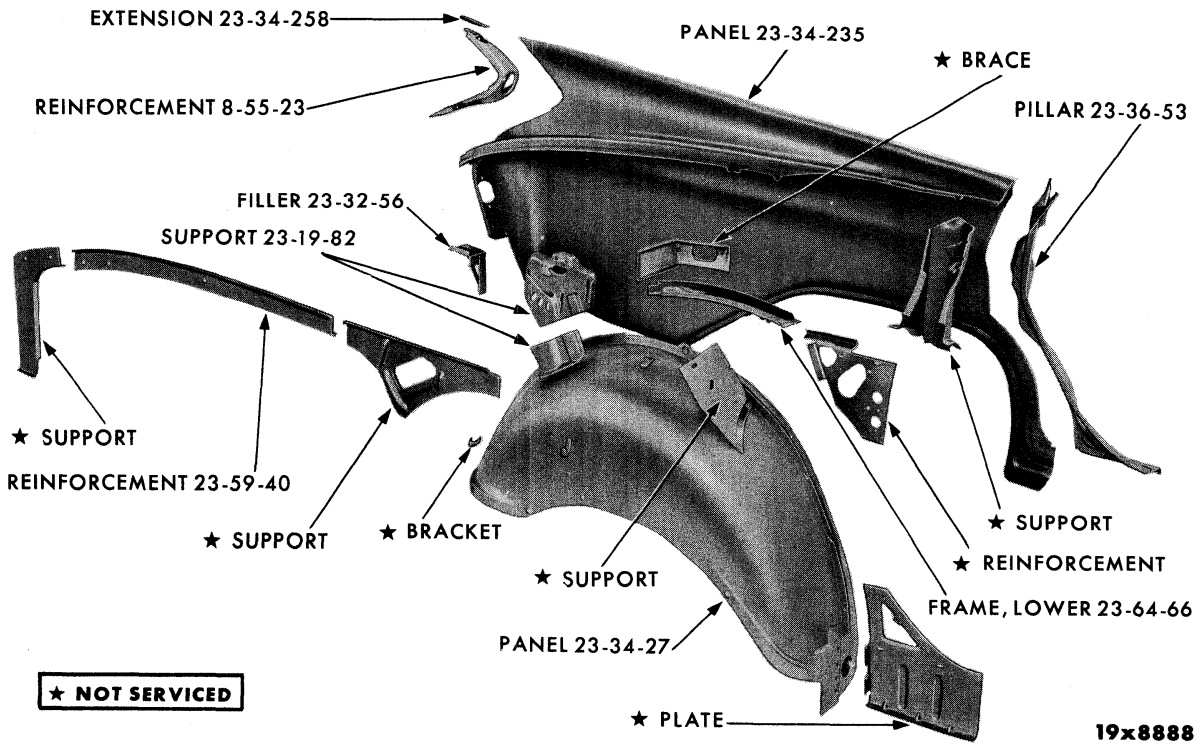


REAR QUARTER PANEL - DESOTO PS1-3 AND CHRYSLER PC1-2-3
4 DOOR SEDAN AND SPECIAL 4 DOOR SEDAN

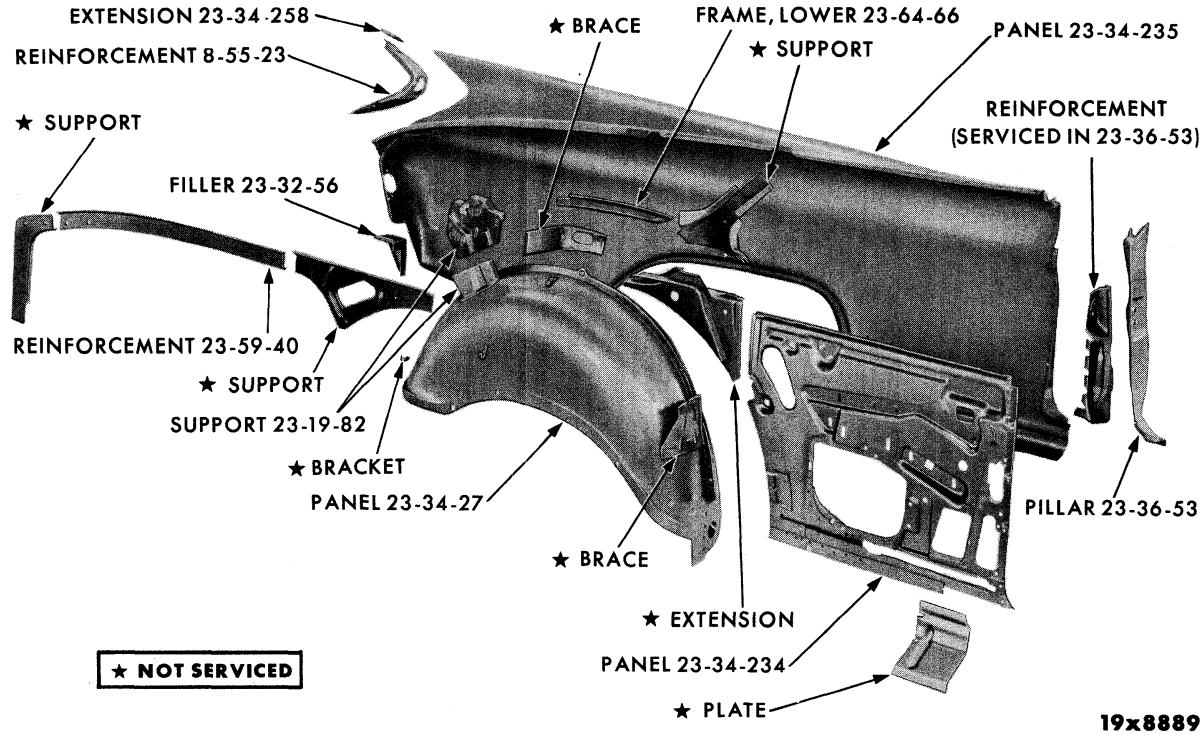


REAR QUARTER PANEL - DESOTO PS1-3 AND CHRYSLER PC1-2-3 SPECIAL CLUB COUPE



MyMopar.com

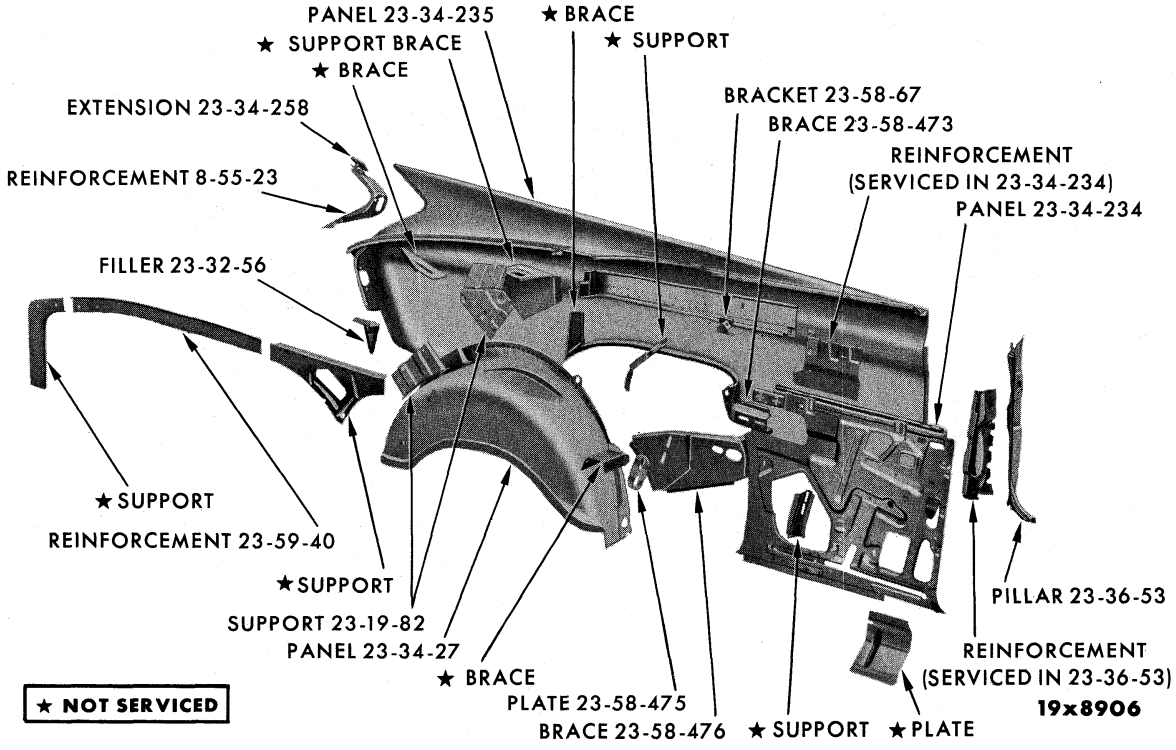


REAR QUARTER PANEL - CHRYSLER PC1-3-4 CONVERTIBLE COUPE

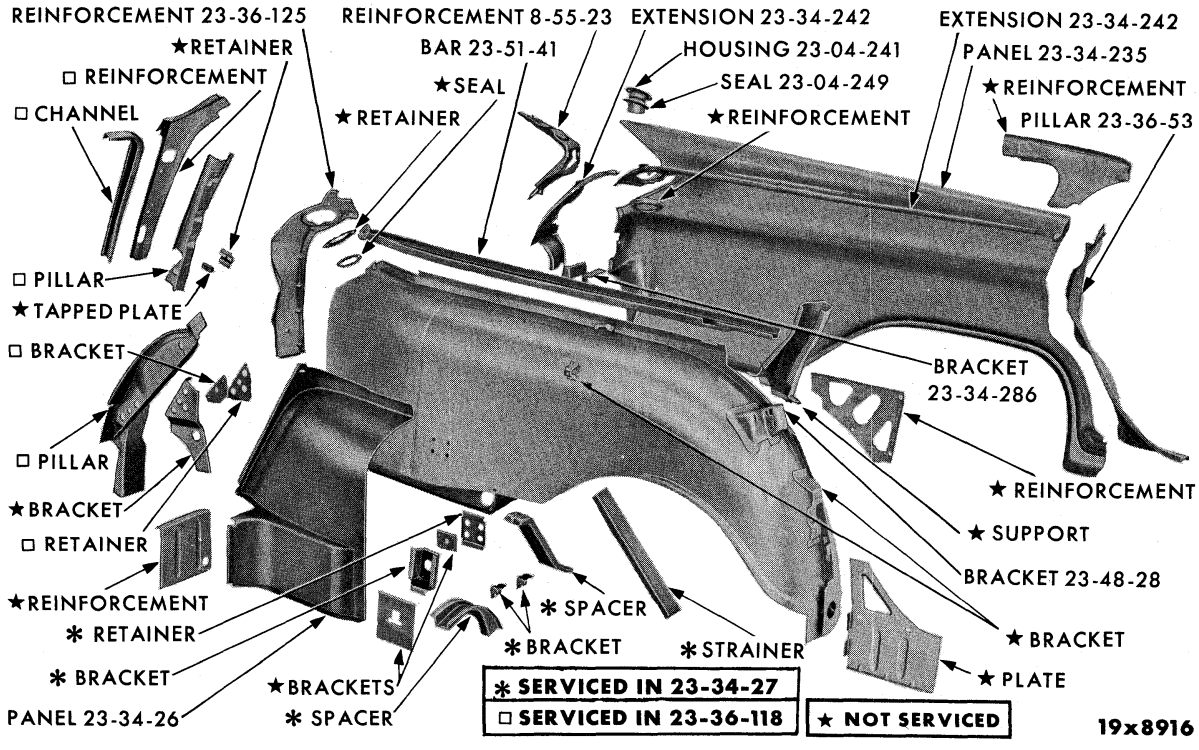


REAR QUARTER PANEL - CHRYSLER PC1-3 SPECIAL 4 DOOR SUBURBAN



MyMopar.com

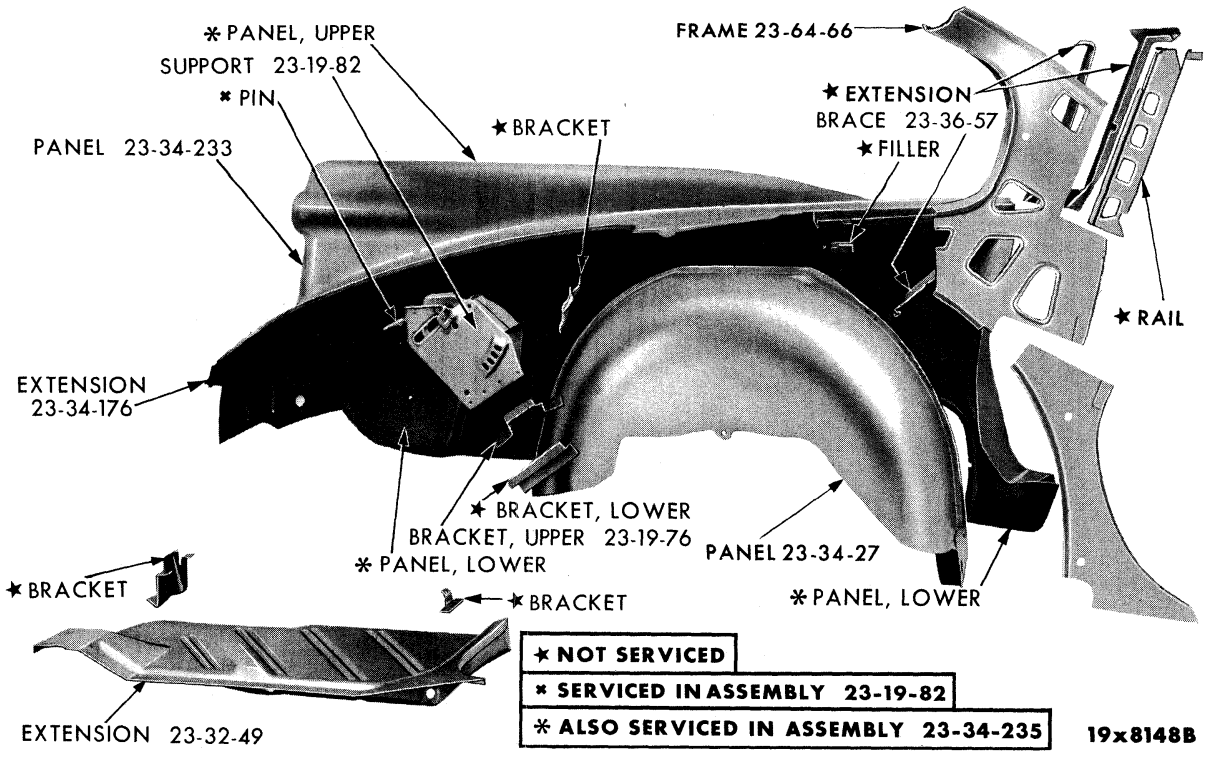


REAR QUARTER PANEL - IMPERIAL PY1 4 DOOR SEDAN

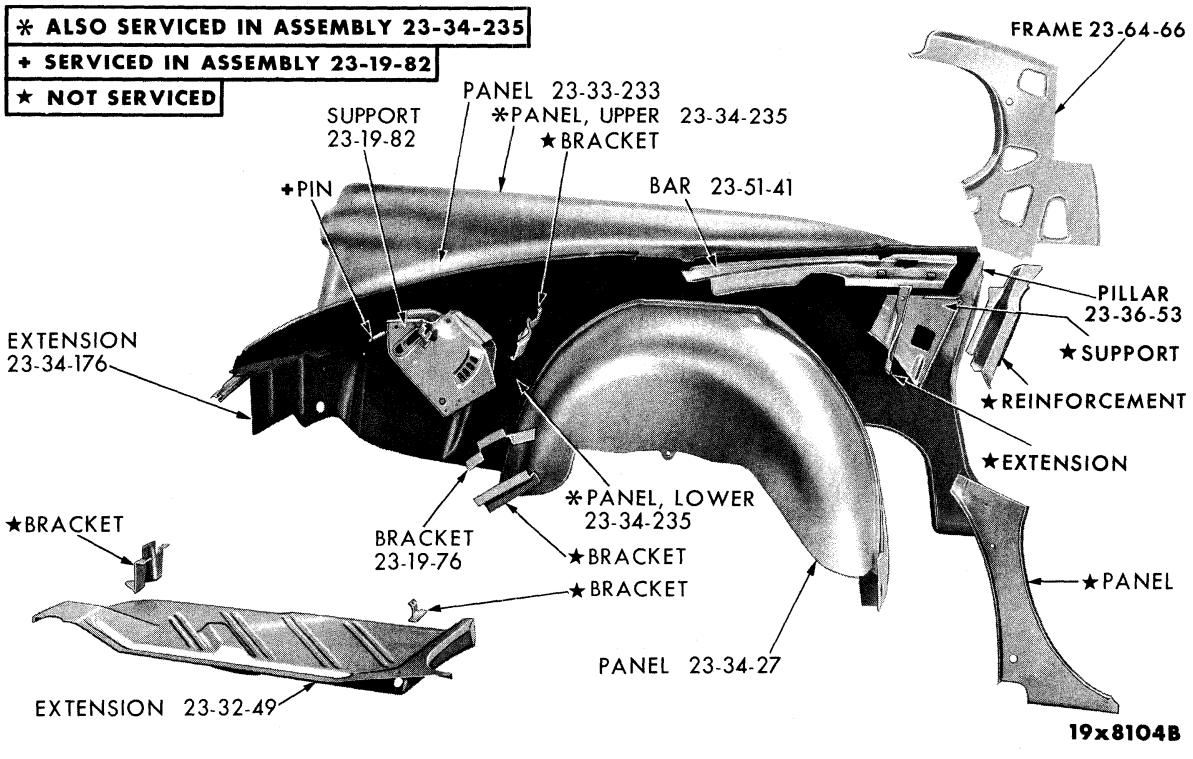


REAR QUARTER PANEL - IMPERIAL PY1 SPECIAL 4 DOOR SEDAN



MyMopar.com

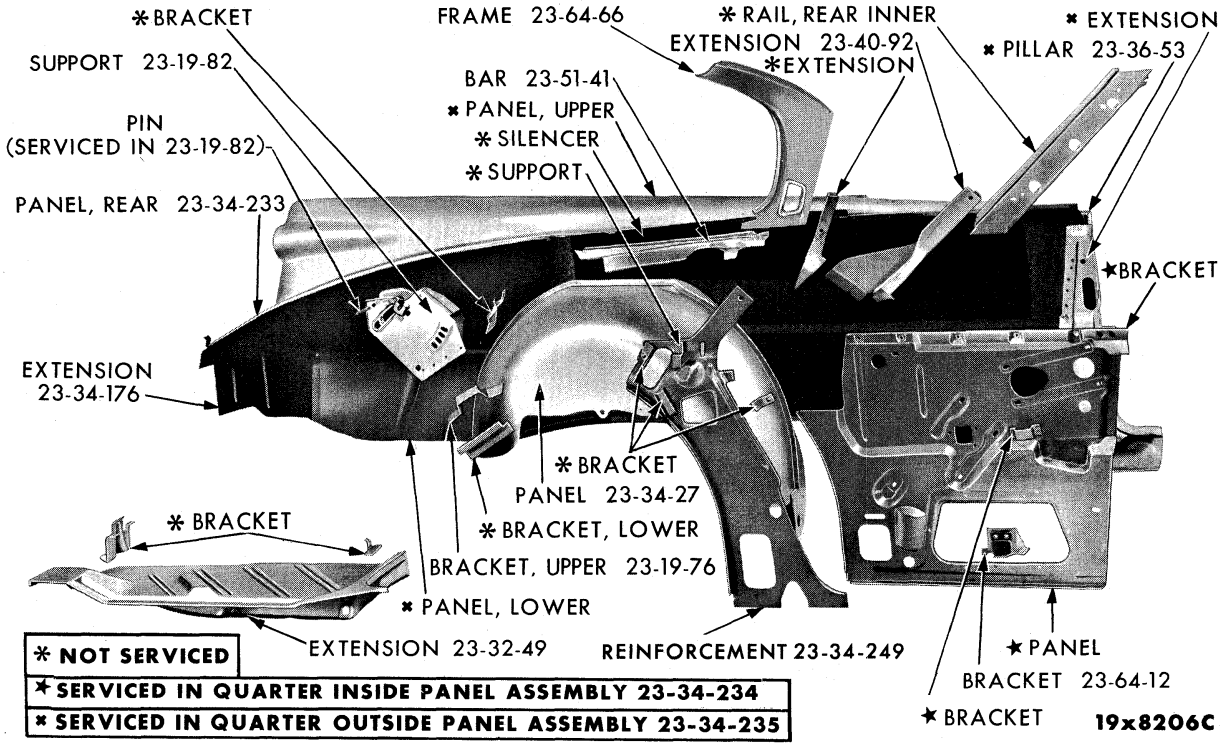


REAR QUARTER PANEL - IMPERIAL PY1 SPECIAL CLUB COUPE

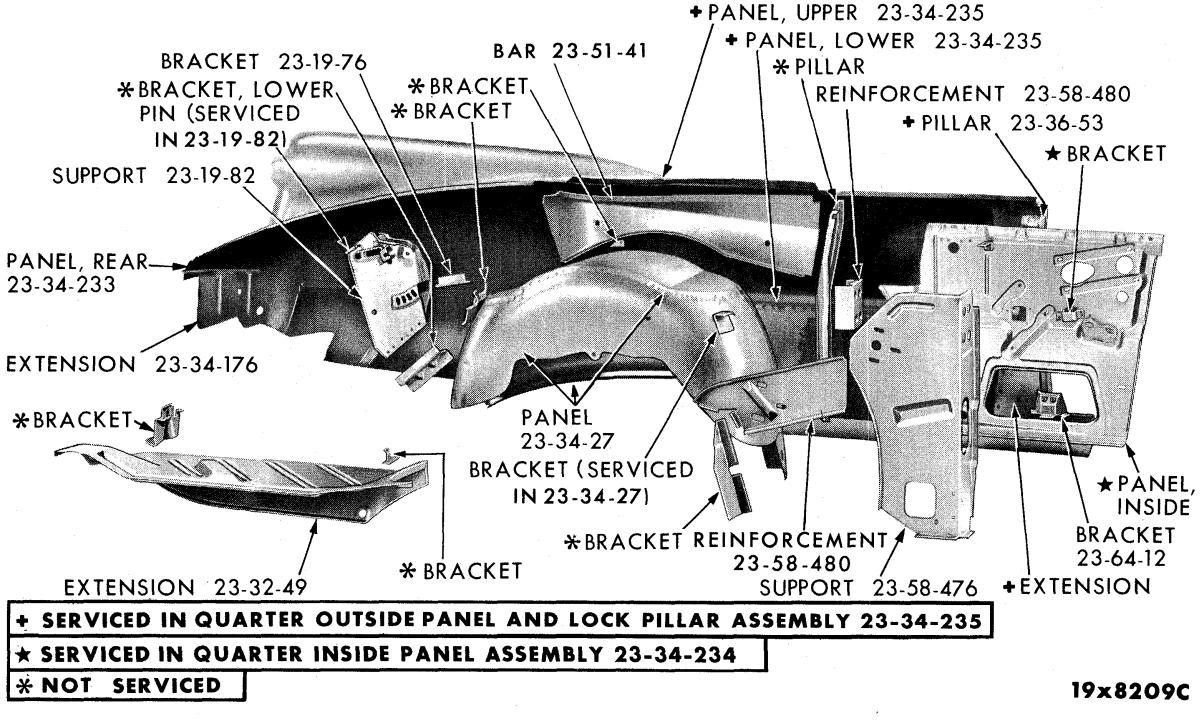


REAR QUARTER PANEL - IMPERIAL PY1 CONVERTIBLE COUPE



MyMopar.com

1960 PLYMOUTH Savoy MOULDINGS for 4Door Sedans, Special 4Door Sedans and 4 Door Suburbans

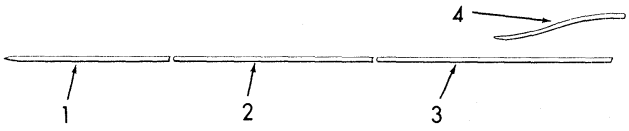


| REF. NO. | PART NUMBER | DESCRIPTION |
|---|---|---|
| 1 | 2084 552-3 | MOULDING PACKAGE, Front Door |
| | *10-6000 836 | Clip |
| 2 | 2084 554-5 | MOULDING PACKAGE, Rear Door, 4D, Sp. 4D. |
| | *8-6000 836 | Clip |
| | *2-6006 514 | Retainer and Bolt |
| | *2-151 497 | Nut |
| | 2196 196-7 | MOULDING PACKAGE, Rear Door, Sub. |
| | 8-6010 210 | Clip |
| | *2-6006 514 | Clip and Bolt |
| | 2-151 497 | Nut |
| 3 | 2084 558-9 | MOULDING PACKAGE, Quarter Panel, 4D., Sp. 4D. |
| | *12-6000 836 | Clip |
| | 2-6000 745 | Clip and Seal |
| | *2-151 497 | Nut |
| | 2196 190-1 | MOULDING PACKAGE, Quarter Panel, Sub. |
| | *16-6000 733 | Clip and Seal |
| 4 | 2084 560-1 | MOULDING PACKAGE, Quarter Panel, 4D., Sp. 4D. |
| | 2-6000 730 | Retainer and Bolt |
| | *2-151 497 | Nut |
| | 10-6000 686 | Clip |
| | 2196 176-7 | MOULDING PACKAGE, Quarter Panel, Sub. |
| | 8-6000 686 | Clip |
| | 2-6006 265 | Clip |

1960 PLYMOUTH Savoy MOULDINGS for Special Club Coupes, Club Sedans and 2 Door Suburbans

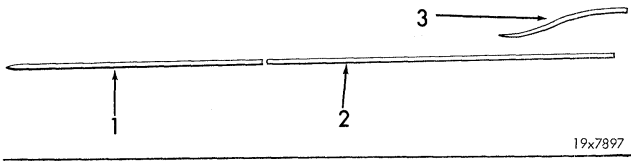


| REF. NO. | PART NUMBER | DESCRIPTION |
|---|---|---|
| 1 | 2084 550-1 | MOULDING PACKAGE, Door |
| | *12-6000 836 | Clip |
| 2 | *2084 556-7 | MOULDING PACKAGE, Quarter Panel, Sp. Cl. Cp., Cl. Sed. |
| | *18-6000 836 | Clip and Seal |
| | 2-6000 745 | Clip and Bolt |
| | *2-151 497 | Nut |
| | 2196 188-9 | MOULDING PACKAGE, Quarter Panel, Sub. |
| | *22-6000 733 | Clip and Seal |

| REF. NO. | PART NUMBER | DESCRIPTION |
|---|---|---|
| 3 | *2084 560-1 | MOULDING PACKAGE, Quarter Panel, Sp. Cl. Cp., Cl. Sed. |
| | *2-6000 730 | Retainer and Bolt |
| | *2-151 497 | Nut |
| | 10-6000 686 | Clip |
| | 2196 176-7 | MOULDING PACKAGE, Quarter Panel, Sub. |
| | 8-6000 686 | Clip |
| | 2-6006 265 | Clip |

1960 PLYMOUTH Belvedere and Fury MOULDINGS for 4 Door Sedans, Special 4 Door Sedans and 4 Door Suburbans

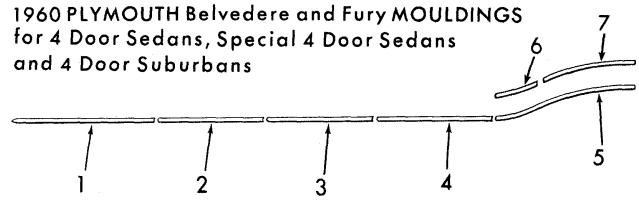


| REF. NO. | PART NUMBER | DESCRIPTION |
|---|---|---|
| 1 | 2196 170-1 | MOULDING PACKAGE, Front Fender |
| | 2-6010 219 | Clip |
| | 8-6010 210 | Clip |
| | 4-6010 029 | Clip and Bolt |
| | 4-151 497 | Nut |
| 2 | 2084 570-1 | MOULDING PACKAGE, Front Door, 4D., Sp. 4D. |
| | 10-6010 210 | Clip |
| | *2196 198-9 | MOULDING PACKAGE, Front Door, Sub. |
| | *10-6010 210 | Clip |
| 3 | 2084 572-3 | MOULDING PACKAGE, Rear Door, 4D., Sp. 4D. |
| | 10-6010 210 | Clip |
| | 2196 182-3 | MOULDING PACKAGE, Rear Door, Sub. |
| | 8-6010 210 | Clip |
| | *2-6006 514 | Clip and Bolt |
| | 2-151 497 | Nut |
| 4 | 2084 574-5 | MOULDING PACKAGE, Quarter Panel, 4D, Sp. 4D. |
| | 2-6010 210 | Clip |
| | 2-6000 738 | Clip and Seal |
| | 2-6000 730 | Retainer and Bolt |
| | *2-151 497 | Nut |
| | 2196 194-5 | MOULDING PACKAGE, Quarter Panel, Sub. |
| | 6-6010 210 | Clip |
| 5 | 2-2084 565 | MOULDING PACKAGE, Quarter Panel, 4D., Sp. 4D. |
| | 10-6000 686 | Clip |
| 6 | 2196 192-3 | MOULDING PACKAGE, Quarter Panel, Sub. |
| | 2-6000 686 | Clip |
| | 2-6006 462 | Clip |
| | 2-6010 210 | Clip |
| 7 | 2196 178-9 | MOULDING PACKAGE, Quarter Panel, Sub. |
| | 8-6000 686 | Clip |


MyMopar.com

1960 PLYMOUTH Belvedere and Fury MOULDINGS for Special Club Coupes, Convertible Coupes and Club Sedans

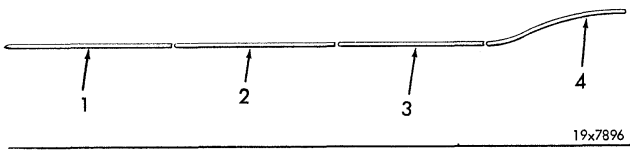


| REF. NO. | PART NUMBER | DESCRIPTION |
|---|---|---|
| 1 | 2196 170-1 | MOULDING PACKAGE, Front Fender |
| | 2-6010 219 | Clip |
| | 8-6010 210 | Clip |
| | 4-6010 029 | Clip and Bolt |
| | 4-151-497 | Nut |
| 2 | 2084 566-7 | MOULDING PACKAGE, Door |
| | 12-6010 210 | Clip |
| 3 | 2084 568-9 | MOULDING PACKAGE, Quarter Panel |
| | 2-6010 210 | Clip |
| | 2-6000 741 | Clip |
| | 2-6000 740 | Clip |
| | *2-6000 800 | Clip |
| | *2-6000 801 | Clip |
| | 2-6000 739 | Clip and Seal |
| | 2-6000 730 | Retainer and Bolt |
| | *2-151 497 | Nut |
| 4 | 2-2084 565 | MOULDING PACKAGE, Quarter Panel |
| | 10-6000 686 | Clip |

1960 DODGE PD1-2 MOULDINGS for 4 Door Sedans and Special 4 Door Sedans

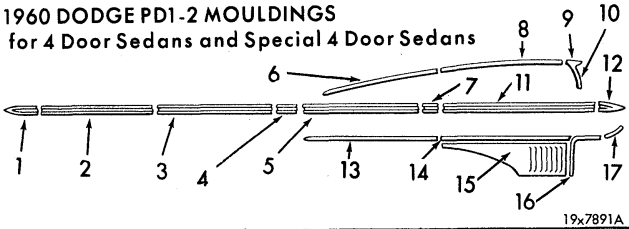


| REF. NO. | PART NUMBER | DESCRIPTION |
|---|---|---|
| 1 | 2-2196 428 | CAP PACKAGE, Front Fender Moulding |
| | 2-6006 143 | Clip |
| | 2-446 059 | Nut |
| 2 | 2196 426-7 | MOULDING PACKAGE, Front Fender |
| | 2-6006 429 | Clip |
| | 10-6000 710 | Clip |
| 3 | 2196 368-9 | MOULDING PACKAGE, Front Door |
| | 8-6000 710 | Clip |
| 4 | 2196 370-1 | MOULDING PACKAGE, Front Door |
| | 2-6000 780 | Clip |
| | *2-2165 357 | Screw and Washer |
| 5 | 2196 372-3 | MOULDING PACKAGE, Rear Door |
| | 8-6000 710 | Clip |
| 6 | 2196 376-7 | MOULDING PACKAGE, Rear Door |
| | 8-6000 788 | Clip |
| 7 | 2196 374-5 | MOULDING PACKAGE, Rear Door |
| | 2-6000 780 | Clip |
| | *2-2165 357 | Screw and Washer |
| 8 | 2196 388-9 | MOULDING PACKAGE, Quarter Panel |
| | 12-6000 788 | Clip and Seal |
| 9 | *1-2196 406 | MOULDING PACKAGE, Quarter Panel, Right |
| | *1-2196 877 | MOULDING PACKAGE, Quarter Panel, Left |
| | 2-125 591 | Screw |
| | 4-151 497 | Nut |
| | 2-6006 160 | Washer |
| 10 | 2-2196 417 | INSERT PACKAGE, Quarter Panel Moulding, PD1 |
| | 2-2196 416 | INSERT PACKAGE, Quarter Panel Moulding, PD2 |
| | 4-1961 538 | SEAL |
| | 2-6006 160 | Washer |
| | 4-151 497 | Nut |
| 11 | 2196 384-5 | MOULDING PACKAGE, Quarter Panel |
| | 12-6000 716 | Clip |
| 12 | 2-2196 367 | MOULDING PACKAGE, Quarter Panel |
| | *2-6010 029 | Clip |
| | *2-6000 834 | Clip |
| | 2-1963 302 | RETAINER |
| | *2-2165 097 | Nut |
| | 2-6000 028 | Nut |
| 13 | 2196 378-9 | MOULDING PACKAGE, Rear Door |
| | 8-6000 736 | Clip |
| 14 | 2196 394-5 | MOULDING PACKAGE, Quarter Panel |
| | 12-6000 735 | Clip |
| 15 | 2196 402-3 | PANEL PACKAGE, Quarter Panel Finish |
| | *2-6000 700 | Retainer and Bolt |
| | 2-6000 028 | Nut and Seal |
| | 10-125 978 | Screw |
| 16 | 2196 392-3 | MOULDING PACKAGE, Quarter Panel |
| | *4-6000 137 | Clip and Seal |
| | 2-125 978 | Screw |
| 17 | 2196 390-1 | MOULDING PACKAGE, Quarter Panel |
| | *6-6000 793 | Clip and Bolt |
| | *6-151 497 | Nut |

1960 DODGE PD1-2 MOULDINGS for Special Club Coupes and Convertible Coupes

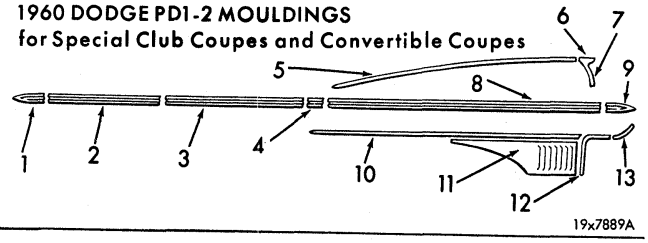


| REF. NO. | PART NUMBER | DESCRIPTION |
|---|---|---|
| 1 | 2-2196 428 | CAP PACKAGE, Front Fender Moulding |
| | 2-6006 143 | Clip |
| | 2-446 059 | Nut |
| 2 | 2196 426-7 | MOULDING PACKAGE, Front Fender |
| | 2-6006 429 | Clip |
| | 10-6000 710 | Clip |

★ Indicates use as required. Numerals in parentheses ( ) refer to notes. Printed in U.S.A.
⊟ Indicates parts not listed in any previous parts book. Prices and specifications subject to change without notice.
April 20, 1960 Supersedes Dec. 30, 1959 * Indicates change or addition.

MyMopar.com

| REF. NO. | PART NUMBER | DESCRIPTION |
|---|---|---|
| 3 | 2196 380-1 | MOULDING PACKAGE, Door |
| | 10-6000 710 | Clip |
| 4 | 2196 382-3 | MOULDING PACKAGE, Door |
| | 2-6000 717 | Clip |
| | *2-2165 357 | Screw |
| 5 | 2-2196 835 | MOULDING PACKAGE, Quarter Panel |
| | 18-6000 788 | Clip and Seal |
| | 2-125 591 | Screw |
| 6 | *1-2196 406 | MOULDING PACKAGE, Quarter Panel, Right |
| | *1-2196 877 | MOULDING PACKAGE, Quarter Panel, Left |
| | 2-125 591 | Screw |
| | 4-151 497 | Nut |
| | 2-6006 160 | Washer |
| 7 | 2-2196 417 | INSERT PACKAGE, Quarter Panel Moulding, PD1 |
| | *2-2196 416 | INSERT PACKAGE, Quarter Panel Moulding, PD2 |
| | 4-1961 538 | Seal |
| | 4-151-497 | Nut |
| 8 | 2196 396-7 | MOULDING PACKAGE, Quarter Panel |
| | 18-6000 716 | Clip |
| 9 | 2-2196 367 | MOULDING PACKAGE, Quarter Panel |
| | 2-1963 302 | RETAINER |
| | 2-6000 720 | Clip and Bolt |
| | 2-6000 028 | Nut and Seal |
| 10 | 2196 398-9 | MOULDING PACKAGE, Quarter Panel |
| | 18-6000 735 | Clip |
| 11 | 2196 402-3 | PANEL, Quarter Panel Finish |
| | 2-6000 700 | Retainer and Bolt |
| | 2-6000 028 | Nut and Seal |
| | 10-125 978 | Screw |
| 12 | 2196 392-3 | MOULDING PACKAGE, Quarter Panel |
| | 2-125 978 | Screw |
| | 4-6000 793 | Clip and Bolt |
| | 4-6006 492 | Clip |
| 13 | 2196 390-1 | MOULDING PACKAGE, Quarter Panel |
| | *4-6000 137 | Clip and Seal |
| | *2-125 978 | Screw |

**1960 DODGE PD3-4 MOULDINGS for 4 Door Sedans and Special 4 Door Sedans**

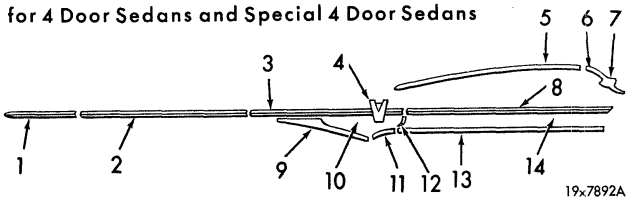


| REF. NO. | PART NUMBER | DESCRIPTION |
|---|---|---|
| 1 | 2196 424-5 | MOULDING PACKAGE, Front Fender |
| | 4-6010 215 | Clip |
| 2 | 2196 110-1 | MOULDING PACKAGE, Front Door |
| | 12-6000 744 | Clip |

| REF. NO. | PART NUMBER | DESCRIPTION |
|---|---|---|
| 3 | *1963 136-7 | MOULDING, Rear Door |
| | 2-145 186 | Screw |
| 4 | 2-2196 109 | ORNAMENT PACKAGE, Rear Door Moulding |
| | 4-6006 264 | Nut |
| 5 | 2-2196 362 | MOULDING PACKAGE, Quarter Panel |
| | 18-6000 788 | Clip and Seal |
| 6 | 2196 418-9 | MOULDING PACKAGE, Quarter Panel |
| | 8-1963 070 | Seal |
| | 4-151 497 | Nut |
| 7 | *2-1881 736 | REFLECTOR PACKAGE, Quarter Panel Moulding |
| | *2 ---- --- | Reflector |
| | *2 ---- --- | Retainer |
| | *2 ---- --- | Gasket |
| 8 | *2196 358-9 | MOULDING PACKAGE, Quarter Panel |
| | 12-6000 755 | Clip |
| 9 | *2196 350-1 | MOULDING PACKAGE, Rear Door |
| | 1963 182-3 | RETAINER |
| | 4-6006 461 | Clip |
| 10 | *1963 110-1 | PANEL, Rear Door Finish, PD3-H, PD4-H |
| | 1964 320-1 | PANEL, Rear Door Finish, PD3-M, PD4-M |
| 11 | *2196 352-3 | MOULDING PACKAGE, Rear Door, PD3-H, PD4-H |
| | 2-6000 749 | Clip |
| | 4-6000 754 | Clip and Seal |
| | 1963 182-3 | RETAINER |
| | 2-159 254 | Screw |
| | 2-131 044 | Washer |
| | 2196 296-7 | MOULDING PACKAGE, Rear Door, PD3-M, PD4-M |
| | 1963 182-3 | RETAINER |
| | 4-6000 754 | Clip and Seal |
| 12 | *2196 841-2 | MOULDING PACKAGE, Quarter Panel, PD3-H, PD4-H |
| | *2 ---- --- | Screw |
| 13 | *2196 354-5 | MOULDING PACKAGE, Quarter Panel, PD3-H, PD4-H |
| | 16-6000 754 | Clip and Seal |
| 14 | *1963 112-3 | PANEL, Quarter Panel Finish, PD3-H, PD4-H |

**1960 DODGE PD3-4 MOULDINGS for Special Club Coupes, Convertible Coupes and Club Sedans**

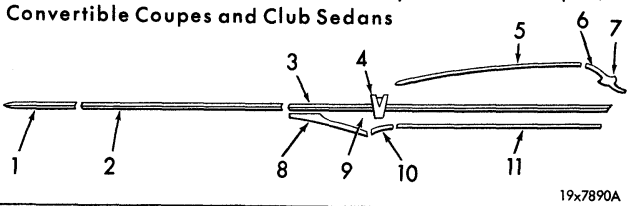


| REF. NO. | PART NUMBER | DESCRIPTION |
|---|---|---|
| 1 | 2196 424-5 | MOULDING PACKAGE, Front Fender |
| | 4-6010 215 | Clip |
| 2 | 2196 112-3 | MOULDING PACKAGE, Door |
| | 18-6000 744 | Clip |


MyMopar.com

| REF. NO. | PART NUMBER | DESCRIPTION |
|---|---|---|
| 3 | 2196 360-1 | MOULDING PACKAGE, Quarter Panel |
| | 20-6000 755 | Clip |
| 4 | 2-2196 298 | ORNAMENT PACKAGE, Quarter Panel Moulding |
| | 4-6006 264 | Nut |
| 5 | 2-2196 362 | MOULDING PACKAGE, Quarter Panel |
| | 18-6000 788 | Clip and Seal |
| 6 | 2196 418-9 | MOULDING PACKAGE, Quarter Panel |
| | 8-1963 070 | Seal |
| | 4-151 497 | Nut |
| 7 | *2-1881 736 | REFLECTOR PACKAGE, Quarter Panel Moulding |
| | *2 ---- --- | Reflector |
| | *2 ---- --- | Retainer |
| | *2 ---- --- | Gasket |
| 8 | *2196 350-1 | MOULDING PACKAGE, Quarter Panel |
| | 1963 182-3 | RETAINER |
| | 4-6006 461 | Clip |
| 9 | *1963 126-7 | PANEL, Quarter Panel Finish, PD3-M, PD4-M |
| | 1963 114-5 | PANEL, Quarter Panel Finish, PD3-H, PD4-H |
| 10 | *2196 296-7 | MOULDING PACKAGE, Quarter Panel, PD3-M, PD4-M |
| | 1963 182-3 | RETAINER |
| | 4-6000 754 | Clip and Seal |
| | 2196 352-3 | MOULDING PACKAGE, Quarter Panel, PD3-H, PD4-H |
| | 2-6000 754 | Clip and Seal |
| | 2-131 044 | Washer |
| | 2-6000 749 | Clip |
| | 1963 182-3 | RETAINER |
| | 2-159 254 | Screw |
| 11 | *2196 356-7 | MOULDING PACKAGE, Quarter Panel, PD3-H, PD4-H |
| | 16-6000 754 | Clip and Seal |
| | 1963 182-3 | RETAINER |

1960 DODGE MOULDINGS
for 4 Door Suburbans and Special 4 Door Suburbans

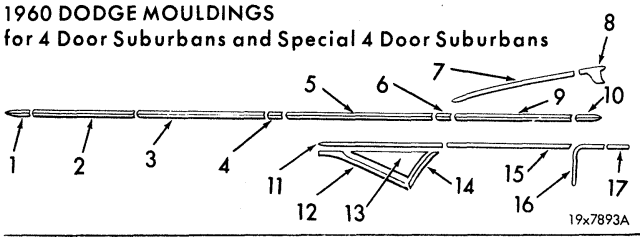


| REF. NO. | PART NUMBER | DESCRIPTION |
|---|---|---|
| 1 | 2-2196 428 | CAP PACKAGE, Front Fender Moulding |
| | 2-6006 143 | Clip |
| | 2-446 059 | Nut |
| 2 | 2196 426-7 | MOULDING PACKAGE, Front Fender |
| | 10-6000 710 | Clip |
| | 2-6006 429 | Clip |
| 3 | 2196 368-9 | MOULDING PACKAGE, Front Door |
| | 8-6000 710 | Clip |
| 4 | 2196 370-1 | MOULDING PACKAGE, Front Door |
| | 2-6000 780 | Clip |
| | *2165 357 | Screw and Washer |
| 5 | *2196 372-3 | MOULDING PACKAGE, Rear Door, D1, D2 |
| | 8-6000 710 | Clip |
| 6 | *2196 374-5 | MOULDING PACKAGE, Rear Door, D1, D2 |
| | 2-6000 780 | Clip |
| | *2-2165 357 | Screw and Washer |
| 7 | 2-2196 429 | MOULDING PACKAGE, Quarter Panel |
| | 12-6000 788 | Clip |
| 8 | 2196 430-1 | MOULDING PACKAGE, Quarter Panel, PD1, PD2 |
| | 2-125 591 | Screw |
| | 2-151 497 | Nut |
| | 2-6006 500 | Clip |
| | 2-1961 944 | SPACER |
| | 2-187 572 | Screw |
| | 2196 432-3 | MOULDING PACKAGE, Quarter Panel, PD3, PD4 |
| | *2-125 591 | Screw |
| | *2-151 497 | Nut |
| | 2-6006 500 | Clip |
| 9 | *2196 384-5 | MOULDING PACKAGE, Quarter Panel, D1, D2 |
| | 12-6000 716 | Clip |
| 10 | *2-2196 367 | MOULDING PACKAGE, Quarter, Panel, D1, D2 |
| | *2-6010 029 | Clip |
| | 2-1963 302 | RETAINER |
| | *2-6000 834 | Clip |
| | *2-2165 097 | Nut |
| | 2-6000 028 | Nut and Seal |
| 11 | 2196 440-1 | MOULDING PACKAGE, Rear Door, PD3, PD4 |
| | 8-6000 744 | Clip |
| | 2-6000 705 | Clip and Bolt |
| | 2-151 497 | Nut |
| 12 | 2196 442-3 | MOULDING PACKAGE, Rear Door, PD3, PD4 |
| | 2-6006 461 | Retainer |
| | 2093 438-9 | RETAINER |
| 13 | 2196 438-9 | PLATE PACKAGE, Rear Door Finish, PD3, PD4 |
| | 4-145 186 | Screw |
| 14 | 2196 444-5 | MOULDING PACKAGE, Rear Door, PD3, PD4 |
| | 2-6000 754 | Clip and Seal |
| | 2093 438-9 | RETAINER |
| 15 | 2196 436-7 | MOULDING PACKAGE, Quarter Panel, PD3, PD4 |
| | 14-6006 455 | Retainer |
| 16 | 2196 392-3 | MOULDING PACKAGE, Quarter Panel, PD1, PD2 |
| | *4-6000 137 | Clip and Bolt |
| | 2-125 978 | Screw |
| 17 | 2196 434-5 | MOULDING PACKAGE, Quarter Panel, PD1, PD2 |
| | 8-3006 492 | Clip |


MyMopar.com

### 1960 DESOTO Mouldings for 4 Door Sedans and Special 4 Door Sedans

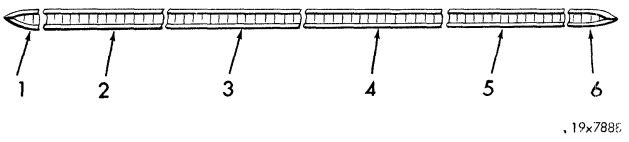


| REF. NO. | PART NUMBER | DESCRIPTION |
|---|---|---|
| 1 | 2196 505-6 | CAP PACKAGE, Front Fender Moulding |
| | 2-6013 066 | Clip and Bolt |
| | *2-446 059 | Nut |
| 2 | 2196 507-8 | MOULDING PACKAGE, Front Fender |
| | 12-6006 516 | Clip |
| 3 | 2196 536-7 | MOULDING PACKAGE, Front Door |
| | 10-6006 453 | Clip |
| 4 | 2196 538-9 | MOULDING PACKAGE, Rear Door |
| | 8-6006 453 | Clip |
| | 2-6003 459 | Retainer and Bolt |
| | 2-271 166 | Nut |
| 5 | 2196 542-3 | MOULDING PACKAGE, Quarter Panel |
| | 14-6006 454 | Clip |
| 6 | 2196 530-1 | EXTENSION, Quarter Panel Moulding |
| | 2-6006 459 | Retainer and Bolt |
| | 2-6013 066 | Retainer and Bolt |
| | *4-6000 028 | Nut |

### 1960 DESOTO Mouldings for Special Club Coupes and Convertible Coupes

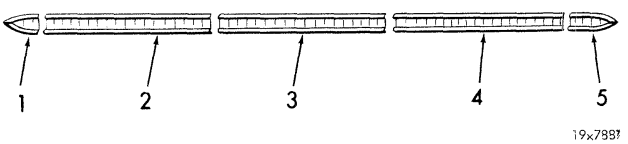


| REF. NO. | PART NUMBER | DESCRIPTION |
|---|---|---|
| 1 | 2196 505-6 | CAP PACKAGE, Front Fender Moulding |
| | 2-6013 066 | Clip and Bolt |
| | 2- 446 059 | Nut |
| 2 | 2196 507-8 | MOULDING PACKAGE, Front Fender |
| | 12-6006 516 | Clip |
| 3 | 2196 534-5 | MOULDING PACKAGE, Door |
| | 12-6006 453 | Clip |
| 4 | 2196 540-1 | MOULDING PACKAGE, Quarter Panel |
| | 20-6006 453 | Clip |
| 5 | 2196 530-1 | EXTENSION PACKAGE, Quarter Panel Moulding |
| | 2-6006 459 | Retainer and Bolt |
| | 2-6013 066 | Retainer and Bolt |
| | *4-6000 028 | Nut |

### 1960 CHRYSLER Windsor and Saratoga MOULDINGS for 4 Door Sedans, Special 4 Door Sedans and Special 4 Door Suburbans

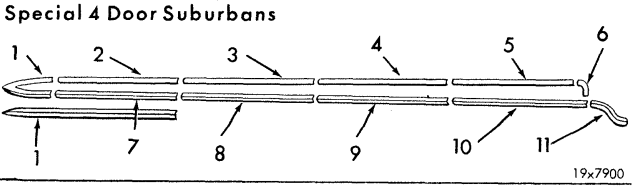


| REF. NO. | PART NUMBER | DESCRIPTION |
|---|---|---|
| 1 | 2196 552-3 | MOULDING PACKAGE, Front Fender, PC1 |
| | 2-6006 429 | Clip |
| | 2-6010 215 | Clip |
| | 2-2196 554 | MOULDING PACKAGE, Front Fender, PC2 |
| | 4-6006 429 | Clip |
| | 2-6010 215 | Clip |
| | 2196 559-60 | CAP PACKAGE, Front Fender Moulding Spec. Equip. |
| | 2-6010 215 | Clip |
| | 2-6000 442 | Clip |
| | 2-6006 286 | Clip |
| 2 | 2196 567-8 | MOULDING PACKAGE, Front Fender, PC1, Spec. Equip. |
| | 2-6003 490 | Clip |
| | 2196 565-6 | MOULDING PACKAGE, Front Fender, PC2, Spec. Equip. |
| | 4-6006 470 | Clip |
| 3 | 2-2196 577 | MOULDING PACKAGE, Front Door, Spec. Equip. |
| | 10-6006 287 | Clip |
| 4 | 2196 583-4 | MOULDING PACKAGE, Rear Door, Spec. Equip. |
| | 8-6006 287 | Clip |
| | 2-6010 029 | Clip and Bolt |
| | 2- 151 497 | Nut |
| 5 | 2196 587-8 | MOULDING PACKAGE, Quarter Panel Spec. Equip. |
| | 14-6006 471 | Clip |
| 6 | 2196 591-2 | EXTENSION PACKAGE, Quarter Panel Moulding, Spec. Equip. |
| | 2-6006 488 | Clip and Bolt |
| | 2-6000 028 | Nut |
| 7 | 2-2196 563 | MOULDING PACKAGE, Front Fender, PC1, Spec. Equip. |
| | 2-6006 429 | Clip |
| | 2-2196 561 | MOULDING PACKAGE, Front Fender, PC2, Spec. Equip. |
| | 4-6006 429 | Clip |
| 8 | 2196 579-80 | MOULDING PACKAGE, Front Door |
| | 10-6006 429 | Clip |
| 9 | 2196 585-6 | MOULDING PACKAGE, Rear Door |
| | 8-6006 429 | Clip |
| | 2-6010 046 | Clip and Bolt |
| | 2- 151 497 | Nut |
| 10 | 2196 593-4 | MOULDING PACKAGE, Quarter Panel |
| | 14-6000 716 | Clip |


MyMopar.com

| REF. NO. | PART NUMBER | DESCRIPTION |
|---|---|---|
| 11 | 2196 597-8 | EXTENSION PACKAGE, Quarter Panel Moulding, 4D., Sp. 4D. |
| | 2093 662-3 | EXTENSION, Quarter Panel Moulding, Sp. 4D. Sub. |
| | 4-6010 046 | Clip and Bolt |
| | 2-6000 745 | Clip and Bolt |
| | 6-6000 028 | Nut |

## 1960 CHRYSLER Windsor and Saratoga MOULDINGS for Special Club Coupes and Convertible Coupes

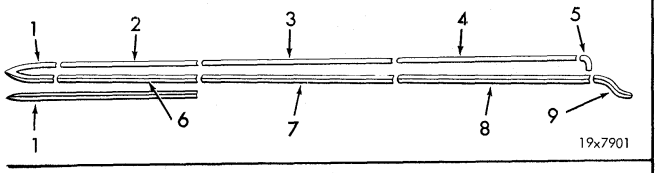


| REF. NO. | PART NUMBER | DESCRIPTION |
|---|---|---|
| 1 | 2196 552-3 | MOULDING PACKAGE, Front Fender, PC1 |
| | 2-6006 429 | Clip |
| | 2-6010 215 | Clip |
| | 2-2196 554 | MOULDING PACKAGE, Front Fender, PC2 |
| | 4-6006 429 | Clip |
| | 2-6010 215 | Clip |
| | 2196 559-60 | CAP PACKAGE, Front Fender Moulding, Spec. Equip. |
| | 2-6010 215 | Clip |
| | 2-6000 442 | Clip |
| | 2-6006 286 | Clip |
| 2 | 2196 567-8 | MOULDING PACKAGE, Front Fender, PC1, Spec. Equip. |
| | 2-6006 470 | Clip |
| | 2196 565-6 | MOULDING PACKAGE, Front Fender, PC2, Spec. Equip. |
| | 4-6006 470 | Clip |
| 3 | 2-2196 578 | MOULDING PACKAGE, Door, Spec. Equip. |
| | 12-6006 287 | Clip |
| 4 | 2196 589-90 | MOULDING PACKAGE, Quarter Panel, Spec. Equip. |
| | 20-6006 471 | Clip |
| 5 | 2196 591-2 | EXTENSION PACKAGE, Quarter Panel Moulding, Spec. Equip. |
| | 2-6006 488 | Clip and Bolt |
| | 2-6000 028 | Nut |
| 6 | 2-2196 563 | MOULDING PACKAGE, Front Fender, PC1, Spec. Equip. |
| | 2-6006 429 | Clip |
| | 2-2196 561 | MOULDING PACKAGE, Front Fender, PC2, Spec. Equip. |
| | 4-6006 429 | Clip |
| 7 | 2196 581-2 | MOULDING PACKAGE, Door |
| | 12-6006 429 | Clip |
| 8 | 2196 595-6 | MOULDING PACKAGE, Quarter Panel |
| | 20-6000 716 | Clip |
| 9 | 2196 597-8 | EXTENSION PACKAGE, Quarter Panel Moulding |
| | 4-6010 046 | Clip and Bolt |
| | 2-6000 745 | Clip and Bolt |
| | 6-6000 028 | Nut |

## 1960 CHRYSLER PC300F MOULDINGS for Special Club Coupes and Convertible Coupes

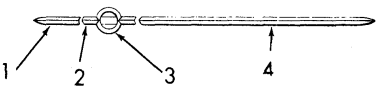


| REF. NO. | PART NUMBER | DESCRIPTION |
|---|---|---|
| 1 | 2-2196 574 | MOULDING PACKAGE, Quarter Panel |
| | 2-6000 716 | Clip |
| | 2-6010 002 | Clip and Bolt |
| | 2-6000 028 | Nut |
| 2 | 2196 575 | BASE PACKAGE, Quarter Panel Medallion |
| | 4-6006 215 | Nut and Seal |
| 3 | 2-1961 141 | MEDALLION, Quarter Panel |
| 4 | 2-2196 576 | MOULDING PACKAGE, Quarter Panel |
| | 16-6000 716 | Clip |

## 1960 IMPERIAL MOULDINGS for 4 Door Sedans and Special 4 Door Sedans

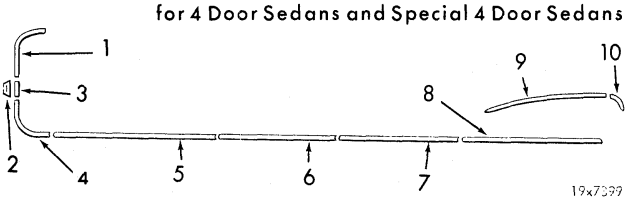


| REF. NO. | PART NUMBER | DESCRIPTION |
|---|---|---|
| 1 | 2196 714-5 | MOULDING PACKAGE, Front Fender |
| | 2-273 329 | Nut |
| 2 | 2-1863 120 | MEDALLION, Front Fender Moulding |
| 3 | 2-2196 728 | BASE PACKAGE, Front Fender Moulding Medallion |
| | 4- 161 895 | Screw |
| 4 | 2196 726-7 | MOULDING PACKAGE, Front Fender |
| | 4-273 329 | Nut |
| 5 | 2196 712-3 | MOULDING PACKAGE, Front Fender |
| | 6-6006 448 | Clip |
| | 12-6010 213 | Clip and Bolt |
| | 12-273 329 | Nut |
| 6 | 2196 675-6 | MOULDING PACKAGE, Front Door |
| | *10-6006 448 | Clip |
| 7 | 2196 743-4 | MOULDING PACKAGE, Rear Door |
| | 10-6006 448 | Clip |
| 8 | 2196 745-6 | MOULDING PACKAGE, Quarter Panel |
| | 8-6006 448 | Clip |
| | 6-6000 709 | Clip and Bolt |
| | 6- 273 329 | Nut |
| 9 | 2-2196 679 | MOULDING PACKAGE, Quarter Panel |
| | *12-6006 446 | Clip |
| | *2-6006 521 | Retainer |


MyMopar.com

| REF. NO. | PART NUMBER | DESCRIPTION |
|---|---|---|
| 10 | 2-2196 832 | BASE PACKAGE, Quarter Panel Reflector |
| | 2-6000 028 | Nut |
| | 2-1960 060 | REFLECTOR, Quarter Panel Base |
| | 2-1960 499 | SEAL, Quarter Panel Reflector |
| | 2-2093 307 | Nut |

1960 IMPERIAL MOULDINGS
for Special Club Coupes and Convertible Coupes

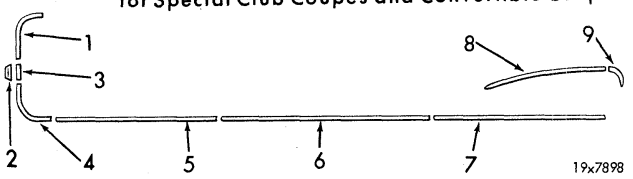


| REF. NO. | PART NUMBER | DESCRIPTION |
|---|---|---|
| 1 | 2196 714-5 | MOULDING PACKAGE, Front Fender |
| | 2-273 329 | Nut |
| 2 | 2-1863 120 | MEDALLION, Front Fender Moulding |
| 3 | 2-2196 728 | BASE PACKAGE, Front Fender Moulding Medallion |
| | 4-161 895 | Screw |
| 4 | 2196 726-7 | MOULDING PACKAGE, Front Fender |
| | 4-273 329 | Nut |
| 5 | 2196 712-3 | MOULDING PACKAGE, Front Fender |
| | 12-6010 213 | Clip and Bolt |
| | 12-273 329 | Nut |
| 6 | 2196 677-8 | MOULDING PACKAGE, Door |
| | 20-6006 448 | Clip |
| 7 | 2196 747-8 | MOULDING PACKAGE, Quarter Panel |
| | 14-6006 448 | Clip |
| | 6-6000 709 | Retainer and Bolt |
| | 6-273 329 | Nut |
| 8 | 2-2196 679 | MOULDING PACKAGE, Quarter Panel |
| | *12-6006 446 | Clip |
| | *2-6006 521 | Retainer |
| 9 | 2-2196 832 | BASE PACKAGE, Quarter Panel Reflector |
| | 2-6000 028 | Nut |
| | 2-1960 060 | REFLECTOR, Quarter Panel Base |
| | 2-1960 499 | SEAL, Quarter Panel Reflector |
| | 2-2093 307 | Nut |

## NOTES

★ Indicates use as required.
⊟ Indicates parts not listed in any previous parts book.
* Indicates change or addition.

Numerals in parentheses ( ) refer to notes.

Printed in U.S.A.
Prices and specifications subject to change without notice.



MyMopar.com

| CODE | REMARKS | PER CAR | PLYMOUTH | DODGE | DESOTO | CHRYSLER | IMPERIAL |
|---|---|---|---|---|---|---|---|

## NOTES


MyMopar.com

# GROUP 23 - BODY

## 23-02-0 ASH RECEIVERS

| CODE | REMARKS | PER CAR | PLYMOUTH | DODGE | DESOTO | CHRYSLER | IMPERIAL |
|---|---|---|---|---|---|---|---|
| 23-02-1 | RECEIVER, Front Seat Back Ash | | | | | | |
| | w/Face PLATE | 1 | 2086 611 | 2086 611 | ---- --- | ---- --- | ---- --- |
| | Complete, use w/Swivel Seat | 1 | 2161 119 | 2161 119 | 2161 119 | 2161 119 | ---- --- |
| | Use w/Swivel Seat, w/Face PLATE | 1 | 2161 115 | 2161 115 | 2161 115 | 2161 115 | ---- --- |
| | Complete, use w/o Lighter | 1 | ---- --- | ---- --- | 2080 642 | 2080 641 | ---- --- |
| | Complete, use w/Lighter | 1 | ---- --- | ---- --- | ---- --- | 2080 639 | ---- --- |
| | Use w/o Lighter | 1 | ---- --- | ---- --- | 2080 184 | 2080 184 | ---- --- |
| | Use w/Lighter | 1 | ---- --- | ---- --- | ---- --- | 2080 181 | ---- --- |
| 23-02-2 | RETAINER, Swivel Seat Back Ash Receiver, w/BEZEL | 1 | 2080 784 | 2080 784 | 2080 784 | 2080 784 | ---- --- |
| 23-02-11 | HOUSING, Front Seat Back Ash Receiver | 1 | 1902 375 | 1902 375 | 1902 375 | ---- --- | ---- --- |
| 23-02-12 | SNUFFER, Front Seat Back Ash Receiver | 1 | 1902 374 | 1902 374 | 1902 374 | 1902 374 | ---- --- |
| 23-02-18 | RECEIVER, Instrument Panel Ash | 1 | ---- --- | 1901 938 | 1901 938 | 1901 739 | ⊟1901 826 |
| | Complete | 1 | 1902 337 | ---- --- | ---- --- | 1839 704 | ---- --- |
| 23-02-19 | HOUSING, Instrument Panel Ash Receiver | 1 | 1901 751 | 1901 944 | 1901 944 | ---- --- | ---- --- |
| 23-02-38 | BUMPER, Instrument Panel Ash Receiver | ★ | ---- --- | ---- --- | ---- --- | ---- --- | 2080 480 |
| 23-02-40 | DOOR and HOUSING, Instrument Panel Ash Receiver | 1 | ---- --- | ---- --- | ---- --- | ---- --- | 1900 878 |
| 23-02-42 | HANDLE, Instrument Panel Ash Receiver | 1 | ---- --- | ---- --- | ---- --- | 1698 140 | ---- --- |
| 23-02-43 | SPRING, Instrument Panel Ash Receiver Door | | | | | | |
| | Right | 1 | ---- --- | ---- --- | ---- --- | ⊟2080 234 | 1901 844 |
| | Left | 1 | ---- --- | ---- --- | ---- --- | ---- --- | 1901 845 |
| 23-02-62 | RECEIVER, Rear Quarter Ash | | | | | | |
| | Sp. Cl. Cp., Cv. Cp. | 2 | ---- --- | ---- --- | ---- --- | ---- --- | 2080 413 |
| 23-02-78 | RECEIVER, Rear Door Ash | 2 | ---- --- | ---- --- | ---- --- | ---- --- | 2080 413 |
| 23-02-81 | RETAINER, Rear Floor Tunnel Console Ash Receiver | | | | | | |
| | Sp. Cl. Cp., Cv. Cp., C3 | 1 | ---- --- | ---- --- | ---- --- | ⊟2086 114 | ---- --- |
| 23-02-89 | BEZEL and LID, Rear Door and Quarter Arm Rest Ash Receiver | | | | | | |
| | 4 D., Sp. 4 D. Right | 1 | ---- --- | ---- --- | ---- --- | ---- --- | 2085 514 |
| | Left | 1 | ---- --- | ---- --- | ---- --- | ---- --- | 2085 515 |
| | Sp. Cl. Cp., Cv. Cp. Right | 1 | ---- --- | ---- --- | ---- --- | ---- --- | 2080 670 |
| | Left | 1 | ---- --- | ---- --- | ---- --- | ---- --- | 2080 671 |
| 23-02-105 | RECEIVER, Floor Tunnel Console Ash, C3-300 Front | 1 | ---- --- | ---- --- | ---- --- | 2161 028 | ---- --- |
| | w/Face PLATE, Rear | 1 | ---- --- | ---- --- | ---- --- | 2161 115 | ---- --- |
| 23-02-107 | BEZEL, Rear Floor Tunnel Console Ash Receiver | | | | | | |
| | C3-300 | 1 | ---- --- | ---- --- | ---- --- | *2161 035 | ---- --- |
| 23-02-145 | RECEIVER, Third Seat Ash | | | | | | |
| | Sub. | 1 | ---- --- | ---- --- | ---- --- | 2086 611 | ---- --- |
| 23-02-149 | BRACKET, Third Seat Ash Receiver Mounting | | | | | | |
| | Sub. | 1 | ---- --- | ---- --- | ---- --- | 2080 596 | ---- --- |
| 23-02-150 | HOUSING, Third Seat Ash Receiver | | | | | | |
| | Sub. | 1 | ---- --- | ---- --- | ---- --- | 1902 375 | ---- --- |

## 23-04-0 FLOOR BOARDS

| | | | | | | | |
|---|---|---|---|---|---|---|---|
| 23-04-2 | COVER, Steering Column Opening | 1 | ---- --- | ---- --- | ---- --- | ---- --- | *1878 145 |
| 23-04-4 | SCREW and WASHER, Steering Column Opening Cover | ★ | ---- --- | 6000 160 | 6000 160 | ---- --- | 6000 160 |
| 23-04-117 | BOLT and RETAINER, Steering Column Opening Cover | 3 | ---- --- | ---- --- | ---- --- | ---- --- | 1475 900 |
| 23-04-229 | PANEL, Spare Tire Cover, except Sub. | 1 | ---- --- | ---- --- | 1708 248 | *1708 248 | 1708 248 |
| | COVER, Spare Tire (plastic) | | | | | | |
| | Sub., 3 Seat Black | 1 | 2170 087 | 2170 087 | ---- --- | 2170 087 | ---- --- |
| | Sp. 4 D. Sub., 3 Seat, C3-H Terra Cotta | 1 | ---- --- | ---- --- | ---- --- | 2170 086 | ---- --- |
| | Blue | 1 | ---- --- | ---- --- | ---- --- | 2170 085 | ---- --- |
| 23-04-241 | HOUSING, Fuel Tank Filler Tube, Sub. w/COLLAR | 1 | 1960 502 | 1960 501 | ---- --- | 1960 500 | ---- --- |
| | All Upper | 1 | ---- --- | ---- --- | ---- --- | ---- --- | 1877 354 |
| | Lower | 1 | ---- --- | ---- --- | ---- --- | ---- --- | 1877 353 |

★ Indicates use as required.
⊟ Indicates parts not listed in any previous parts book.
* Indicates change or addition.



MyMopar.com

Printed in U.S.A.
Prices and specifications subject to change without notice.
Dec. 9, 1960 Supersedes April 20, 1960.

| CODE | REMARKS | PER CAR | PLYMOUTH | DODGE | DESOTO | CHRYSLER | IMPERIAL |
|---|---|---|---|---|---|---|---|
| **23-04-0** | **FLOOR BOARDS - Cont'd** | | | | | | |
| 23-04-249 | SEAL, Fuel Tank Filler Tube | | | | | | |
| | 4 D. Sub., Sp. 4 D. Sub. Housing | 1 | 1833 900 | 1833 900 | ---- --- | 1833 900 | ---- --- |
| | All to Door Housing | 1 | ---- --- | ---- --- | ---- --- | ---- --- | 1877 516 |
| | Collar | 1 | ---- --- | ---- --- | ---- --- | ---- --- | 1877 488 |
| 23-04-250 | RETAINER, Fuel Tank Filler Tube Seal | 1 | ---- --- | ---- --- | ---- --- | ---- --- | 1877 355 |
| **23-06-0** | **GLOVE BOX** | | | | | | |
| 23-06-4 | BOX, Glove | 1 | 2080 550 | 1901 784 | 1901 784 | 1901 793 | 1901 808 |
| | SCREW | ★ | 1901 828 | 1901 828 | 1901 828 | 1901 828 | 1901 828 |
| 23-06-10 | DOOR, Glove Box | 1 | ⊟2162 116 | 1901 931 | 1901 931 | 1901 734 | 1839 569 |
| 23-06-12 | PLATE, Glove Box Door Inner | | | | | | |
| | Prime | 1 | ---- --- | ---- --- | ---- --- | ---- --- | 1839 568 |
| 23-06-13 | ARM, Glove Box Door Check | ★ | 2080 554 | 1901 790 | 1901 790 | 1901 764 | ---- --- |
| | SCREW | ★ | 1901 691 | 1901 691 | 1901 691 | 1901 691 | ---- --- |
| | Right | 1 | ---- --- | ---- --- | ---- --- | ---- --- | 1902 176 |
| | Left | 1 | ---- --- | ---- --- | ---- --- | ---- --- | 1902 177 |
| 23-06-14 | BUMPER, Glove Box Door | 2 | 729 152 | 729 152 | ---- --- | 2080 201 | 2080 480 |
| | Large | 1 | *1298 930 | 1298 930 | 1298 930 | ---- --- | ---- --- |
| 23-06-15 | CATCH, Glove Box Door Lock | 1 | 6008 203 | 2161 217 | 2161 217 | 6008 016 | 2161 469 |
| | BOLT | 2 | ---- --- | ---- --- | ---- --- | ---- --- | 2161 473 |
| 23-06-16 | BRACKET, Glove Box Door Lock Catch | 1 | ---- --- | ---- --- | ---- --- | 1685 782 | ---- --- |
| 23-06-17 | FINISH PLATE, Glove Box Door | 1 | ---- --- | 1839 734 | 2161 002 | ---- --- | ---- --- |
| 23-06-21 | HINGE, Glove Box Door | 1 | 2080 458 | 2161 621 | 2161 621 | 1901 727 | 1902 201 |
| | SCREW, to Door | ★ | 1901 691 | 1901 691 | 1901 691 | 1901 691 | ---- --- |
| 23-06-28 | LATCH, Glove Box Door w/o Lock | 1 | 2080 736 | ---- --- | ---- --- | ---- --- | ---- --- |
| | w/LOCK | 1 | 1830 415 | 2080 321 | 2080 321 | 1830 415 | 2086 051 |
| 23-06-41 | GROMMET, Glove Box Door Check Arm | 1 | 2080 488 | 2080 488 | 2080 488 | 2080 488 | 2080 488 |
| 23-06-49 | MOULDING, Glove Box Door Horizontal | | | | | | |
| | D1, D2 | 1 | ---- --- | 1902 313 | 1902 313 | ---- --- | ---- --- |
| | NUT | 3 | ---- --- | 6008 128 | 6008 128 | ---- --- | ---- --- |
| 23-06-53 | NAME PLATE, Glove Box Door | | | | | | |
| | Dodge | 1 | ---- --- | 2080 987 | ---- --- | ---- --- | ---- --- |
| | Seneca | 1 | ---- --- | 2080 986 | ---- --- | ---- --- | ---- --- |
| | Pioneer | 1 | ---- --- | 2080 984 | ---- --- | ---- --- | ---- --- |
| | Phoenix | 1 | ---- --- | 2080 985 | ---- --- | ---- --- | ---- --- |
| | NUT | 2 | ---- --- | 6008 128 | ---- --- | ---- --- | ---- --- |
| | FireFlite | 1 | ---- --- | ---- --- | 2161 003 | ---- --- | ---- --- |
| | Adventurer | 1 | ---- --- | ---- --- | 2161 004 | ---- --- | ---- --- |
| | NUT | 2 | ---- --- | ---- --- | 6008 153 | ---- --- | ---- --- |
| | Windsor | 1 | ---- --- | ---- --- | ---- --- | 1901 847 | ---- --- |
| | Saratoga | 1 | ---- --- | ---- --- | ---- --- | 1901 848 | ---- --- |
| | New Yorker | 1 | ---- --- | ---- --- | ---- --- | 1901 849 | ---- --- |
| | Chrysler | 1 | ---- --- | ---- --- | ---- --- | 1902 430 | ---- --- |
| | NUT | 3 | ---- --- | ---- --- | ---- --- | 6008 153 | ---- --- |
| 23-06-102 | CLIP, Glove Box Door Road Map | 1 | 2080 950 | ---- --- | ---- --- | ---- --- | ---- --- |
| | SCREW | 2 | 1901 828 | ---- --- | ---- --- | ---- --- | ---- --- |
| **23-07-0** | **BRACKETS AND REINFORCEMENTS** | | | | | | |
| 23-07-168 | REINFORCEMENT, Instrument Panel Lower | 1 | ---- --- | ---- --- | ---- --- | ---- --- | 1839 570 |
| 23-07-169 | BRACKET, Instrument Panel Lower Reinforcement to Pillar | | | | | | |
| | Right | 1 | ---- --- | ---- --- | ---- --- | ---- --- | 2080 652 |
| | Left | 1 | ---- --- | ---- --- | ---- --- | ---- --- | 2080 653 |



MyMopar.com

| CODE | REMARKS | | PER CAR | PLYMOUTH | DODGE | DESOTO | CHRYSLER | IMPERIAL |
|---|---|---|---|---|---|---|---|---|
| **23-08-0 BUMPERS AND STRIKERS** | | | | | | | | |
| 23-08-12 | BUMPER or WEDGE, Door | | | | | | | |
| | Sp. Cl. Cp., Cv. Cp. | Door | 2 | 989 513 | 989 513 | 989 513 | 989 513 | 989 513 |
| | | Body | 2 | 1544 841 | 1544 841 | 1544 841 | 1544 841 | 1750 995 |
| | Cl. Sed., 2 D. Sub. | Upper | 2 | 2080 201 | 2080 201 | ---- --- | ---- --- | ---- --- |
| | | Center and Lower | 4 | 1954 393 | 1954 393 | ---- --- | ---- --- | ---- --- |
| | 4 D., 4 D. Sub. | Front Upper | 2 | 2080 201 | 2080 201 | 2080 201 | 2080 201 | 2093 675 |
| | | Center | 2 | 1883 740 | 1883 740 | 1954 393 | 1954 393 | ---- --- |
| | | Lower | 2 | 1883 740 | 1883 740 | 1883 740 | 1883 740 | 2093 675 |
| | | Rear Upper and Lower | 4 | 1883 740 | 1883 740 | 1883 740 | 1883 740 | ---- --- |
| | Sp. 4 D., Sp. 4 D. Sub. | Front Upper and Lower | 4 | 1883 740 | 1883 740 | 1883 740 | 1883 740 | ---- --- |
| | | Rear Upper and Lower | 2 | 1883 740 | 1883 740 | 1883 740 | 1883 740 | ---- --- |
| | Sp. Cl. Cp., Cv. Cp. | Upper | 2 | 1954 393 | 1954 393 | 1954 393 | 1954 393 | ---- --- |
| | | Lower | 2 | 1954 393 | 1954 393 | 1954 397 | 1954 397 | ---- --- |
| | Sp. Cl. Cp., Cv. Cp. | | 4 | ---- --- | ---- --- | ---- --- | ---- --- | 2093 950 |
| 23-08-13 | STOP, Front Door Bumper | | | | | | | |
| | 4 D., Sp. 4 D. | Chrome | 4 | ---- --- | ---- --- | ---- --- | ---- --- | 2080 982 |
| | SCREW | | 4 | ---- --- | ---- --- | ---- --- | ---- --- | 161 378 |
| 23-08-54 | SPACER, Door Lock Striker | | | | | | | |
| | | Thin | ★ | 1954 717 | 1954 717 | 1954 717 | 1954 717 | 1954 717 |
| 23-08-60 | STRIKER, Door Lock | Right | ★ | 1954 234 | 1954 234 | 1954 234 | 1954 234 | 1954 234 |
| | | Left | ★ | 1954 235 | 1954 235 | 1954 235 | 1954 235 | 1954 235 |
| 23-08-75 | PLATE, Door Lockstriker Tapping | | ★ | 1952 214 | 1952 214 | 1952 214 | 1952 214 | 1952 214 |
| **23-09-0 GLASS CHANNELS** | | | | | | | | |
| 23-09-2 | ROLLER, Door Glass Lower Channel | | | | | | | |
| | 4 D., 4 D. Sub. | Rear, Single Groove | ★ | 1697 607 | 1697 607 | 1697 607 | 1697 607 | ---- --- |
| | 4 D., Sp. 4 D., Sp. Cl. Cp. | Single Groove | ★ | ---- --- | ---- --- | ---- --- | ---- --- | 1750 490 |
| | Sp. 4 D. | Rear Door, Electric | 6 | ---- --- | ---- --- | ---- --- | ---- --- | 2094 112 |
| 23-09-9 | CHANNEL, Quarter Window Glass Lower | | | | | | | |
| | Cl. Sed., 2 D. Sub. | Right | 1 | 1950 560 | 1950 560 | ---- --- | ---- --- | ---- --- |
| | | Left | 1 | 1950 561 | 1950 561 | ---- --- | ---- --- | ---- --- |
| | Sp. Cl. Cp., Cv. Cp. | Right | 1 | ---- --- | ---- --- | ---- --- | ---- --- | 1691 086 |
| | | Left | 1 | ---- --- | ---- --- | ---- --- | ---- --- | 1691 087 |
| 23-09-10 | ROLLER, Quarter Window Glass Lower Channel | | | | | | | |
| | Cv. Cp., Cl. Sed., 2 D. Sub. | Single Groove | 2 | 1697 607 | 1697 607 | ---- --- | 1697 607 | ---- --- |
| 23-09-13 | NUT, Quarter Window Rear Track Roller Sleeve | | | | | | | |
| | Cv. Cp. | | 2 | 1909 708 | 1909 708 | ---- --- | 1909 708 | ---- --- |
| 23-09-16 | GUIDE, Quarter Window Glass, w/BRACKET | | | | | | | |
| | Sp. Cl. Cp. | w/HOLES, Right | 1 | *1964 018 | *1964 018 | ---- --- | ---- --- | ---- --- |
| | | Left | 1 | 1964 019 | 1964 019 | ---- --- | ---- --- | ---- --- |
| | | w/SLOTS, Right | 1 | ⊟2166 034 | ⊟2166 034 | ---- --- | ---- --- | ---- --- |
| | | Left | 1 | ⊟2166 035 | ⊟2166 035 | ---- --- | ---- --- | ---- --- |
| 23-09-17 | SLIDE, Quarter Window Lower Channel Guide, Nylon | | | | | | | |
| | Sp. Cl. Cp., Cv. Cp. | | | | | | | |
| | | 1 Piece Double Groove Roller | ★ | 1883 819 | 1883 819 | 1883 819 | 1883 819 | ---- --- |
| | | 5 Piece Double Groove Roller | ★ | 2165 992 | 2165 992 | 2165 992 | 2165 992 | ---- --- |
| | Sp. Cl. Cp., Cv. Cp. | | 8 | ---- --- | ---- --- | ---- --- | ---- --- | 1690 950 |
| | Rear Door Window Lower Channel Guide | | | | | | | |
| | | 1 Piece Double Groove Roller | 6 | 1883 819 | 1883 819 | 1883 819 | 1883 819 | ---- --- |
| | | 5 Piece Double Groove Roller | 6 | 2165 992 | 2165 992 | 2165 992 | 2165 992 | ---- --- |
| 23-09-47 | SUPPORT, Front Door Glass Rear Run Channel | | | | | | | |
| | Sp. 4 D., Sp. 4 D. Sub., Sp. Cl. Cp., Cv. Cp. | | | | | | | |
| | | Upper | 2 | 1963 732 | 1963 732 | 1963 732 | 1963 732 | ---- --- |
| | | Lower | 2 | 1954 446 | 1954 446 | 1954 446 | 1954 446 | ---- --- |
| 23-09-51 | CHANNEL, Front Door Window Glass Rear Run | | | | | | | |
| | Sp. 4 D., Sp. 4 D. Sub., Sp. Cl. Cp., Cv. Cp., | w/RUN, Right | 1 | *1950 812 | *1950 812 | *1950 812 | *1950 812 | ---- --- |
| | | Left | 1 | 1950 813 | 1950 813 | 1950 813 | 1950 813 | ---- --- |
| | Except 4 D. | Right | 1 | ---- --- | ---- --- | ---- --- | ---- --- | *1961 382 |
| | | Left | 1 | ---- --- | ---- --- | ---- --- | ---- --- | *1961 383 |
| | 4 D. | Right | 1 | ---- --- | ---- --- | ---- --- | ---- --- | *1750 614 |
| | | Left | 1 | ---- --- | ---- --- | ---- --- | ---- --- | *1750 615 |

★ Indicates use as required.
⊟ Indicates parts not listed in any previous parts book.
* Indicates change or addition.



MyMopar.com

Printed in U.S.A.
Prices and specifications subject to change without notice.
Dec. 9, 1960 Supersedes April 20, 1960.

| CODE | REMARKS | | PER CAR | PLYMOUTH | DODGE | DESOTO | CHRYSLER | IMPERIAL |
|---|---|---|---|---|---|---|---|---|
| **23-09-0** | **GLASS CHANNELS-Cont'd** | | | | | | | |
| 23-09-52 | CHANNEL, Front Door Window Glass Lower | | | | | | | |
| | Cl. Sed., 2 D. Sub. | Right | 1 | 2165 714 | 2165 714 | ---- --- | ---- --- | ---- --- |
| | | Left | 1 | 2165 715 | 2165 715 | ---- --- | ---- --- | ---- --- |
| | 4 D., 4 D. Sub. | Right | 1 | 2165 712 | 2165 712 | 2165 712 | 2165 712 | 1750 816 |
| | | Left | 1 | 2165 713 | 2165 713 | 2165 713 | 2165 713 | 1750 817 |
| | Sp. 4 D. | Right | 1 | ---- --- | ---- --- | ---- --- | ---- --- | *1750 578 |
| | | Left | 1 | ---- --- | ---- --- | ---- --- | ---- --- | *1750 579 |
| | Sp. Cl. Cp., Cv. Cp. | Right | 1 | ---- --- | ---- --- | ---- --- | ---- --- | 1751 056 |
| | | Left | 1 | ---- --- | ---- --- | ---- --- | ---- --- | 1751 057 |
| 23-09-56 | CHANNEL, Rear Door Window Glass Run | | | | | | | |
| | 4 D. | Front, Right | 1 | ---- --- | ---- --- | ---- --- | ---- --- | 1961 390 |
| | | Left | 1 | ---- --- | ---- --- | ---- --- | ---- --- | 1961 391 |
| | Sp. 4 D. | Front, Right | 1 | ---- --- | ---- --- | ---- --- | ---- --- | 1961 378 |
| | | Left | 1 | ---- --- | ---- --- | ---- --- | ---- --- | 1961 379 |
| | | Rear, Right | 1 | ---- --- | ---- --- | ---- --- | ---- --- | 1961 380 |
| | | Left | 1 | ---- --- | ---- --- | ---- --- | ---- --- | 1961 381 |
| 23-09-58 | CHANNEL, Rear Door Window Glass Lower | | | | | | | |
| | 4 D., D3, D4 | Right | 1 | 1950 582 | 1950 582 | 1950 648 | 1950 648 | ---- --- |
| | | Left | 1 | 1950 583 | 1950 583 | 1950 649 | 1950 649 | ---- --- |
| | 4 D. Sub. | Right | 1 | 1950 648 | 1950 648 | ---- --- | ---- --- | ---- --- |
| | | Left | 1 | 1950 649 | 1950 649 | ---- --- | ---- --- | ---- --- |
| | 4 D., D1, D2 | Right | 1 | ---- --- | 1950 648 | ---- --- | ---- --- | ---- --- |
| | | Left | 1 | ---- --- | 1950 649 | ---- --- | ---- --- | ---- --- |
| | Sp. 4 D. | Right | 1 | ---- --- | ---- --- | ---- --- | ---- --- | 1692 152 |
| | | Left | 1 | ---- --- | ---- --- | ---- --- | ---- --- | 1692 153 |
| 23-09-67 | CHANNEL, Tailgate Glass Run | | | | | | | |
| | Sub. | Side Lower, Right | 1 | 1960 008 | 1960 008 | ---- --- | 1960 008 | ---- --- |
| | | Left | 1 | 1960 009 | 1960 009 | ---- --- | 1960 009 | ---- --- |
| 23-09-75 | CHANNEL, Quarter Window Guide | | | | | | | |
| | Sp. Cl. Cp., Cv. Cp. | Front, Right | 1 | ---- --- | ---- --- | ---- --- | ---- --- | 1961 392 |
| | | Left | 1 | ---- --- | ---- --- | ---- --- | ---- --- | 1961 393 |
| | | Rear, Right | 1 | ---- --- | ---- --- | ---- --- | ---- --- | 1961 394 |
| | | Left | 1 | ---- --- | ---- --- | ---- --- | ---- --- | 1961 395 |
| **23-10-0** | **DOOR CHECK** | | | | | | | |
| 23-10-1 | ARM, Rear Door Check | | 2 | ---- --- | ---- --- | ---- --- | ---- --- | 1860 829 |
| 23-10-2 | BRACKET, Rear Door Check Arm | | 2 | ---- --- | ---- --- | ---- --- | ---- --- | 1750 686 |
| 23-10-17 | GUIDE, Rear Door Check Arm | | 2 | ---- --- | ---- --- | ---- --- | ---- --- | 1476 900 |
| **23-11-0** | **DOORS** | | | | | | | |
| 23-11-1 | SHELL, Front Door | | | | | | | |
| | Cl. Sed., 2 D. Sub. | Right | 1 | 1964 122 | 1964 122 | ---- --- | ---- --- | ---- --- |
| | | Left | 1 | 1964 123 | 1964 123 | ---- --- | ---- --- | ---- --- |
| | 4 D., 4 D. Sub. | Right | 1 | 1964 118 | 1964 118 | 1952 508 | 1952 508 | 1961 372 |
| | | Left | 1 | 1964 119 | 1964 119 | 1952 509 | 1952 509 | 1961 373 |
| | Sp. 4 D., Sp. 4 D. Sub. | Right | 1 | 2165 326 | 2165 326 | 2165 338 | 2165 338 | 1961 374 |
| | | Left | 1 | 2165 327 | 2165 327 | 2165 339 | 2165 339 | 1961 375 |
| | Sp. Cl. Cp., Cv. Cp. | Right | 1 | 1964 124 | 1964 124 | 1952 516 | 1952 516 | 1961 370 |
| | | Left | 1 | 1964 125 | 1964 125 | 1952 517 | 1952 517 | 1961 371 |
| 23-11-2 | DOOR, Front, Trimmed, Includes HARDWARE and GLASS. All Codes. | | | | | | | |

NOTE: Door assemblies complete, will no longer be listed by part number in the parts books. Door assemblies complete will be available during the production run of the car model and will be furnished on special order only. The vehicle SERIAL NUMBER must be noted on the order.

| | | | | | | | | |
|---|---|---|---|---|---|---|---|---|
| 23-11-3 | SHELL, Rear Door | | | | | | | |
| | 4 D. Sub. | Right | 1 | 1964 130 | 1964 130 | ---- --- | ---- --- | ---- --- |
| | | Left | 1 | 1964 131 | 1964 131 | ---- --- | ---- --- | ---- --- |
| | 4 D., D1, D2 | Right | 1 | 1964 126 | 1964 138 | 1952 510 | 1952 510 | 1961 402 |
| | | Left | 1 | 1964 127 | 1964 139 | 1952 511 | 1952 511 | 1961 403 |
| | Sp. 4 D., D1, D2 | Right | 1 | 1964 128 | 1964 140 | 1952 514 | 1952 514 | 1961 404 |
| | | Left | 1 | 1964 129 | 1964 141 | 1952 515 | 1952 515 | 1961 405 |



MyMopar.com

| CODE | REMARKS | | PER CAR | PLYMOUTH | DODGE | DESOTO | CHRYSLER | IMPERIAL |
|---|---|---|---|---|---|---|---|---|
| **23-11-0** | **DOORS - Cont'd** | | | | | | | |
| 23-11-3 | SHELL - Cont'd | | | | | | | |
| | 4 D., D3, D4 | Right | 1 | ---- --- | 1964 132 | ---- --- | ---- --- | ---- --- |
| | | Left | 1 | ---- --- | 1964 133 | ---- --- | ---- --- | ---- --- |
| | Sp. 4 D. Sub. | Right | 1 | ---- --- | 1964 136 | ---- --- | 1952 514 | ---- --- |
| | | Left | 1 | ---- --- | 1964 137 | ---- --- | 1952 515 | ---- --- |
| | Sp. 4 D., D3, D4 | Right | 1 | ---- --- | 1964 134 | ---- --- | ---- --- | ---- --- |
| | | Left | 1 | ---- --- | 1964 135 | ---- --- | ---- --- | ---- --- |
| 23-11-4 | DOOR, Rear, Trimmed, Includes HARDWARE and GLASS. All Codes. | | | | | | | |
| | NOTE: Door assemblies complete, will no longer be listed by part number in the parts books. Door assemblies complete will be available during the production run of the car model and will be furnished on special order only. The vehicle SERIAL NUMBER must be noted on the order. | | | | | | | |
| 23-11-23 | ORNAMENT PACKAGE, Rear Door | | | | | | | |
| | Sub. | | 2 | ---- --- | 2084 547 | ---- --- | ---- --- | ---- --- |
| | CLIP | | 4 | ---- --- | 6000 752 | ---- --- | ---- --- | ---- --- |
| | 4 D., Sp. 4 D., D3, D4 | | 2 | ---- --- | 2196 109 | ---- --- | ---- --- | ---- --- |
| | NUT | | 4 | ---- --- | 6006 264 | ---- --- | ---- --- | ---- --- |
| **23-13-0** | **SAFE-T-MATIC DOOR LOCKS** | | | | | | | |
| | NOTE: See Illustration in Front of Group | | | | | | | |
| **23-14-0** | **DOOR REGULATORS AND REMOTE CONTROL HANDLES** | | | | | | | |
| 23-14-7 | HANDLE, Rear Door Outside Assist | | | | | | | |
| | Taxi | Right | 1 | 2165 276 | ---- --- | ---- --- | ---- --- | ---- --- |
| | | Left | 1 | 2165 277 | ---- --- | ---- --- | ---- --- | ---- --- |
| | RIVET | | 8 | 2165 341 | ---- --- | ---- --- | ---- --- | ---- --- |
| 23-14-10 | HANDLE, Door Outside | | | | | | | |
| | | Front, Right | 1 | 1961 600 | 1961 600 | 1961 600 | 1961 600 | 1961 600 |
| | | Left | 1 | 1961 601 | 1961 601 | 1961 601 | 1961 601 | 1961 601 |
| | | Rear, Right | 1 | 1961 606 | 1961 606 | 1961 606 | 1961 606 | 1961 606 |
| | | Left | 1 | 1961 607 | 1961 607 | 1961 607 | 1961 607 | 1961 607 |
| | NUT | | ★ | 151 497 | 151 497 | 151 497 | 151 497 | 151 497 |
| 23-14-18 | HANDLE, Door Window Regulator | | ★ | 1952 818 | 1952 819 | ---- --- | ---- --- | ---- --- |
| | | w/ESCUTCHEON | ★ | ---- --- | ---- --- | 1900 870 | 1900 870 | 1900 870 |
| 23-14-19 | ESCUTCHEON, Doors and Quarter Window Regulator Handle | | ★ | *1954 124 | ⊟2192 685 | ⊟2192 685 | ⊟2192 685 | ---- --- |
| | ESCUTCHEON, Quarter Window Regulator Handle | | | | | | | |
| | Sp. Cl. Cp., Cv. Cp., Cl. Sed. | 1/4" Thick | 2 | 2192 685 | ---- --- | ---- --- | ---- --- | ---- --- |
| 23-14-21 | SPRING, Regulator and Remote Control Handle | | 2 | 1963 964 | 1963 964 | 1963 964 | 1963 964 | 2086 036 |
| 23-14-23 | CLIP, Regulator and Remote Control Handle | | ★ | 1602 532 | 1602 532 | 1602 532 | 1602 532 | 1602 532 |
| 23-14-24 | SPACER, Regulator and Remote Control | | | | | | | |
| | | Plastic | ★ | 1954 128 | 1954 128 | 1900 872 | 1900 872 | 1900 872 |
| | | 1 23/64" O.D. x 1 7/32 I.D. x 1/4" | ★ | 2165 667 | ---- --- | ---- --- | ---- --- | ---- --- |
| 23-14-25 | COVER, Door Remote Control Handle | | | | | | | |
| | D3, D4 | | ★ | 1952 955 | 1952 955 | ---- --- | ---- --- | ---- --- |
| 23-14-27 | HANDLE, Door Remote Control | | | | | | | |
| | C1, C2 | Right | ★ | 1954 568 | 1954 570 | 2086 674 | 2086 674 | ---- --- |
| | | Left | ★ | 1954 569 | 1954 571 | 2086 675 | 2086 675 | ---- --- |
| | C3 | Right | ★ | ---- --- | ---- --- | ---- --- | 1900 860 | 1900 856 |
| | | Left | ★ | ---- --- | ---- --- | ---- --- | 1900 861 | 1900 857 |
| | SCREW | on Handle | ★ | ---- --- | ---- --- | ---- --- | 6008 191 | 6008 191 |
| 23-14-39 | HANDLE, Front Door Vent Wing | | | | | | | |
| | NOTE: See Part Type Code 23-14-53. | | | | | | | |
| 23-14-46 | WASHER, Front Door Vent Wing Handle Shaft | | 2 | 6000 110 | 6000 110 | 6000 110 | 6000 110 | 6000 110 |

★ Indicates use as required.
⊟ Indicates parts not listed in any previous parts book.
* Indicates change or addition.



Printed in U.S.A.
Prices and specifications subject to change without notice.
Dec. 9, 1960 Supersedes April 20, 1960.

MyMopar.com

## 23-14-0 DOOR REGULATORS AND REMOTE CONTROL HANDLES - Cont'd

| CODE | REMARKS | | PER CAR | PLYMOUTH | DODGE | DESOTO | CHRYSLER | IMPERIAL |
|---|---|---|---|---|---|---|---|---|
| 23-14-47 | CATCH, Front Door Vent Wing Handle | | | | | | | |
| | 4 D. | Right | 1 | ---- --- | ---- --- | ---- --- | ---- --- | 2094 186 |
| | | Left | 1 | ---- --- | ---- --- | ---- --- | ---- --- | 2094 187 |
| | Except 4 D. | Right | 1 | ---- --- | ---- --- | ---- --- | ---- --- | 2093 828 |
| | | Left | 1 | ---- --- | ---- --- | ---- --- | ---- --- | 2093 829 |
| 23-14-51 | GROMMET, Door Remote Control Handle, w/CLIP | | | | | | | |
| | C3 | | ★ | ---- --- | ---- --- | ---- --- | 2085 899 | 2085 862 |
| 23-14-52 | PIN, Door Vent Wing Handle to Shaft | | 2 | 6000 116 | 6000 116 | 6000 116 | 6000 116 | 6000 116 |
| 23-14-53 | HANDLE PACKAGE, Front Door Vent Wing | | | | | | | |
| | | Right | 1 | 1954 110 | 1954 110 | 1954 110 | 1954 110 | 1954 110 |
| | | Left | 1 | 1954 111 | 1954 111 | 1954 111 | 1954 111 | 1954 111 |
| 23-14-79 | HANDLE, Quarter Window Regulator | | | | | | | |
| | Cl.Sed. | | 2 | 1954 540 | 1954 541 | ---- --- | ---- --- | ---- --- |
| | Sp.Cl.Cp., Cv.Cp., 2 D. Sub. | | 2 | 1952 818 | 1952 819 | ---- --- | ---- --- | ---- --- |
| | Sp.Cl.Cp., Cv.Cp. | w/ESCUTCHEON | 2 | ---- --- | ---- --- | 2085 252 | 2085 252 | 2085 252 |
| 23-14-153 | BUMPER, Door Outside Handle | | ★ | 1651 493 | 1651 493 | 1651 493 | 1651 493 | 1651 493 |
| | | Center | ★ | *1707 384 | *1707 384 | *1707 384 | *1707 384 | *1707 384 |

## 23-15-0 DOOR HINGE

| CODE | REMARKS | | PER CAR | PLYMOUTH | DODGE | DESOTO | CHRYSLER | IMPERIAL |
|---|---|---|---|---|---|---|---|---|
| 23-15-1 | HINGE, Door Upper, w/Integral CHECK | | | | | | | |
| | | Front, Right | 1 | 1882 028 | 1882 028 | 1882 028 | 1882 028 | 1651 394 |
| | | Left | 1 | 1882 029 | 1882 029 | 1882 029 | 1882 029 | 1651 395 |
| | Sp. 4 D., Sp. 4 D. Sub. | Rear, Right | 1 | 1882 400 | 1882 400 | 1950 604 | 1950 604 | 1651 400 |
| | | Left | 1 | 1882 401 | 1882 401 | 1950 605 | 1950 605 | 1750 565 |
| | 4 D., 4 D. Sub. | Rear, Right | 1 | 1950 610 | 1950 610 | 1884 448 | 1884 448 | 1651 400 |
| | | Left | 1 | 1950 611 | 1950 611 | 1884 449 | 1884 449 | 1750 565 |
| 23-15-3 | HINGE, Door Lower | | | | | | | |
| | | Front, Right | 1 | *1882 048 | *1882 048 | *1882 048 | *1882 048 | *2094 238 |
| | | Left | 1 | 1882 049 | 1882 049 | 1882 049 | 1882 049 | 2094 239 |
| | 4 D., 4 D. Sub. | Rear, Right | 1 | 2166 452 | 2166 452 | 2166 452 | 2166 452 | 1651 400 |
| | | Left | 1 | 2166 453 | 2166 453 | 2166 453 | 2166 453 | 1750 565 |
| | Sp.4 D., Sp.4 D.Sub., w/CHECK | Rear, Right | 1 | 2166 466 | 2166 466 | 2166 466 | 2166 466 | 1651 400 |
| | | Left | 1 | 2166 467 | 2166 467 | 2166 467 | 2166 467 | 1750 565 |
| 23-15-6 | ROLLER, Door Hinge Integral Check | | | | | | | |
| | | Front Upper | 2 | 1883 802 | 1883 802 | 1883 802 | 1883 802 | ---- --- |
| | | Rear Lower | 2 | 1882 967 | 1882 967 | 1882 967 | 1882 967 | ---- --- |
| 23-15-7 | SHIM, Rear Door Upper Hinge | | | | | | | |
| | Sp. 4 D., Sp. 4 D. Sub. | Thin | ★ | 1950 670 | 1950 670 | ---- --- | ---- --- | ---- --- |
| | All | Thin | ★ | ---- --- | ---- --- | *1909 421 | *1909 421 | ---- --- |
| 23-15-9 | PIN, Door Hinge Integral Check | | | | | | | |
| | | Upper | ★ | 1882 054 | 1882 054 | 1882 054 | 1882 054 | ---- --- |
| | | Lower | ★ | 1882 964 | 1882 964 | 1882 964 | 1882 964 | ---- --- |
| | PIN, Door Hinge | | | | | | | |
| | | Upper | ★ | 1882 053 | 1882 053 | 1882 053 | 1882 053 | ---- --- |
| | | Lower | ★ | 1882 965 | 1882 965 | 1882 965 | 1882 965 | ---- --- |
| 23-15-10 | SCREW and WASHER, Door Hinge | | ★ | 1244 818 | 1244 818 | 1244 818 | 1244 818 | 1244 818 |
| 23-15-11 | RING, Door Hinge Integral Check Roller Retainer | | | | | | | |
| | | Front | 2 | 1884 405 | 1884 405 | 1884 405 | 1884 405 | ---- --- |
| | | Rear | 2 | 1882 961 | 1882 961 | 1882 961 | 1882 961 | ---- --- |
| 23-15-13 | PLATE, Front Pillar Door Hinge Tapping | | 4 | ---- --- | ---- --- | ---- --- | ---- --- | 6006 086 |
| 23-15-14 | SPRING, Door Hinge Integral Check Pin | | | | | | | |
| | | Upper | ★ | 1882 055 | 1882 055 | 1882 055 | 1882 055 | ---- --- |
| | | Lower | ★ | 1882 963 | 1882 963 | 1882 963 | 1882 963 | ---- --- |
| 23-15-17 | SPACER, Front Door Upper Hinge or Sleeve | | 4 | 1909 975 | 1909 975 | 1909 975 | 1909 975 | ---- --- |
| | SPACER, Rear Door Hinge Integral Check Pin | | 2 | 1950 559 | 1950 559 | 1950 559 | 1950 559 | ---- --- |
| 23-15-21 | RETAINER, Center Pillar Rear Door Hinge Tapping Plate | | | | | | | |
| | | Upper, Right | 1 | ---- --- | ---- --- | ---- --- | ---- --- | 1750 602 |
| | | Left | 1 | ---- --- | ---- --- | ---- --- | ---- --- | 1750 603 |
| | | Lower | 2 | ---- --- | ---- --- | ---- --- | ---- --- | 1750 484 |
| 23-15-22 | GROMMET, Front Door Hinge | Lower | 2 | 1758 813 | 1758 813 | 1758 813 | 1758 813 | ---- --- |
| | SEAL, Door Hinge | | ★ | ---- --- | ---- --- | ---- --- | ---- --- | 1961 262 |

★ Indicates use as required.
⊟ Indicates parts not listed in any previous parts book.
Dec. 9, 1960 Supersedes April 20, 1960.



MyMopar.com

Printed in U.S.A.
Prices and specifications subject to change without notice.
* Indicates change or addition.

| CODE | REMARKS | | PER CAR | PLYMOUTH | DODGE | DESOTO | CHRYSLER | IMPERIAL |
|---|---|---|---|---|---|---|---|---|
| **23-17-0** | **LOCK CYLINDER AND KEYS** | | | | | | | |
| | NOTE: For Glove Box See Part Type Code 23-06-28. | | | | | | | |
| 23-17-2 | CYLINDER and KEY, Door and Ignition Lock | | | | | | | |
| | | CJ Series | 1 | ⊟2161 503 | ⊟2161 503 | ⊟2161 503 | ⊟2161 503 | ⊟2161 503 |
| | Taxi | CJ Series | 1 | 2080 227 | ---- --- | ---- --- | ---- --- | ---- --- |
| | CYLINDER and KEYS, Door, Ignition and Electric Tailgate Lock | | | | | | | |
| | Sp. 4 D. Sub. | CJ Series | 1 | ---- --- | ---- --- | ---- --- | 1838 985 | ---- --- |
| 23-17-4 | PACKAGE, Deck Lid and Glove Box Door Lock Cylinder and Keys | | | | | | | |
| | Taxi | | 1 | 2086 052 | ---- --- | ---- --- | ---- --- | ---- --- |
| 23-17-5 | CYLINDER and KEYS, Deck Lid Lock | | 1 | 2086 049 | 2086 049 | 2086 049 | 2086 049 | 2086 050 |
| 23-17-9 | GASKET, Deck Lid Lock Cylinder | | 1 | 1883 896 | 1883 896 | 1883 896 | 1883 896 | ---- --- |
| 23-17-10 | RETAINER, Deck Lid Lock Cylinder | | 1 | 2080 575 | 2080 575 | 2080 575 | 2080 575 | ---- --- |
| 23-17-11 | SPRING, Deck Lid Lock Cylinder Cover | | 1 | ---- --- | ---- --- | ---- --- | ---- --- | 1961 074 |
| 23-17-13 | COVER, Deck Lid Lock Cylinder, w/MEDALLION | | 1 | ---- --- | ---- --- | ---- --- | ---- --- | 1960 544 |
| 23-17-18 | RETAINER, Rear Floor Pan Cover Lock Cylinder | | | | | | | |
| | Sub. | | 1 | 1866 686 | 1866 686 | ---- --- | 1866 686 | ---- --- |
| 23-17-24 | CYLINDER and KEYS, Door Lock (consists of 2 Cylinders and 2 Keys) | | 1 | 2086 048 | 2086 048 | 2086 048 | 2086 048 | 2086 048 |
| 23-17-25 | KEY, Door and Ignition Lock Cylinder Blank | | | | | | | |
| | | CJ Series | ★ | 1649 628 | 1649 628 | 1649 628 | 1649 628 | 1698 845 |
| 23-17-49 | CYLINDER and KEYS, Tailgate Lock Sub. | | | | | | | |
| | | Manual | 1 | ⊟2161 599 | ⊟2161 599 | ---- --- | ⊟2161 599 | ---- --- |
| | | Electric | 1 | 1972 966 | 1972 966 | ---- --- | 1972 966 | ---- --- |
| 23-17-51 | GASKET, Electric Tailgate Lock Cylinder Sub. | | 1 | 1819 316 | 1819 316 | ---- --- | 1819 316 | ---- --- |
| 23-17-52 | RETAINER, Electric Tailgate Lock Cylinder Sub. | | 1 | 1819 317 | 1819 317 | ---- --- | 1819 317 | ---- --- |
| 23-17-66 | KEY, Deck Lid and Glove Box Lock Cylinder Blank | | 2 | ---- --- | ---- --- | ---- --- | ---- --- | 1520 798 |
| 23-17-72 | CYLINDER and KEYS, Tirewell Cover Lock Sub. | | 1 | 1830 044 | 1830 044 | ---- --- | 1830 044 | ---- --- |
| **23-18-0** | **DOOR LOCKS AND REMOTE CONTROLS** | | | | | | | |
| 23-18-5 | LOCK, Door | Front, Right | 1 | 1954 056 | 1954 056 | 1954 056 | 1954 056 | 1961 744 |
| | | Left | 1 | 1954 057 | 1954 057 | 1954 057 | 1954 057 | 1961 745 |
| | | Rear, Right | 1 | 1954 058 | 1954 058 | 1954 058 | 1954 058 | 1961 746 |
| | | Left | 1 | 1954 059 | 1954 059 | 1954 059 | 1954 059 | 1961 747 |
| 23-18-11 | LINK, Rear Door Lock Remote Control | | 2 | ---- --- | ---- --- | ---- --- | ---- --- | *1961 717 |
| 23-18-13 | REMOTE CONTROL, Door Lock, w/LINK | | | | | | | |
| | Sp. Cl. Cp., Cv. Cp., Cl. Sed., 2 D. Sub., C1, C2 | Right | 1 | 1964 836 | 1964 836 | 1964 836 | 1964 836 | 1961 750 |
| | | Left | 1 | 1964 837 | 1964 837 | 1964 837 | 1964 837 | 1961 751 |
| | 4 D., Sp. 4 D., 4 D. Sub., Sp. 4 D. Sub., C1, C2 | Front, Right | 1 | 1964 834 | 1964 834 | 1964 834 | 1964 834 | ---- --- |
| | | Left | 1 | 1964 835 | 1964 835 | 1964 835 | 1964 835 | ---- --- |
| | 4 D., Sp. 4 D., D1, D2, C1, C2 | Rear, Right | 1 | 1964 784 | 1964 782 | 1964 782 | 1964 782 | ---- --- |
| | | Left | 1 | 1964 785 | 1964 783 | 1964 783 | 1964 783 | ---- --- |
| | 4 D., Sp. 4 D., D3, D4, C3 | Rear, Right | 1 | ---- --- | 1964 784 | ---- --- | 2165 232 | ---- --- |
| | | Left | 1 | ---- --- | 1964 785 | ---- --- | 2165 233 | ---- --- |
| | 4 D. Sub., Sp. 4 D. Sub., D1, D2, C3 | Rear, Right | 1 | ---- --- | 1964 782 | ---- --- | 2165 232 | ---- --- |
| | | Left | 1 | ---- --- | 1964 783 | ---- --- | 2165 233 | ---- --- |
| | 4 D., Sp. 4 D., Sp. 4 D. Sub., C3 | Front, Right | 1 | ---- --- | ---- --- | ---- --- | 2165 224 | 1961 748 |
| | | Left | 1 | ---- --- | ---- --- | ---- --- | 2165 225 | 1961 749 |
| | Sp. Cl. Cp., Cv. Cp. | Right | 1 | ---- --- | ---- --- | ---- --- | 2165 226 | ---- --- |
| | | Left | 1 | ---- --- | ---- --- | ---- --- | 2165 227 | ---- --- |
| | REMOTE CONTROL, Door Lock | | | | | | | |
| | | Rear, Right | 1 | ---- --- | ---- --- | ---- --- | ---- --- | 1961 704 |
| | | Left | 1 | ---- --- | ---- --- | ---- --- | ---- --- | 1961 705 |

★ Indicates use as required.
⊟ Indicates parts not listed in any previous parts book.
* Indicates change or addition.

MyMopar.com



Printed in U.S.A.
Prices and specifications subject to change without notice.
Dec. 9, 1960 Supersedes April 20, 1960.

## 23-18-0 DOOR LOCKS AND REMOTE CONTROLS - Cont'd

| CODE | REMARKS | PER CAR | PLYMOUTH | DODGE | DESOTO | CHRYSLER | IMPERIAL |
|---|---|---|---|---|---|---|---|
| 23-18-14 | SCREW and WASHER, Door Remote Control | 4 | ---- --- | ---- --- | ---- --- | ---- --- | 1277 755 |
| 23-18-20 | LINK, Door Outside Handle to Lock | | | | | | |
| | Front | 2 | 1963 638 | 1963 638 | 1963 639 | 1963 639 | ---- --- |
| | 4 D., Sp. 4 D., D3, D4 Rear | 2 | 1954 909 | 1954 909 | 1954 911 | 1954 911 | 1961 736 |
| | 4 D. Sub., Sp. 4 D. Sub. Rear | 2 | 1954 910 | 1954 910 | 1954 911 | 1954 911 | ---- --- |
| | 4 D., Sp. 4 D., D1, D2 Rear | 2 | ---- --- | 1954 910 | ---- --- | ---- --- | ---- --- |
| | 4 D., Sp. 4 D. Front | 2 | ---- --- | ---- --- | ---- --- | ---- --- | 1961 752 |
| | Sp. Cl. Cp., Cv. Cp. | 2 | ---- --- | ---- --- | ---- --- | ---- --- | 1961 753 |
| 23-18-21 | SPRING, Door Lock Remote Control Lever | ★ | 849 517 | 849 517 | 849 517 | 849 517 | 849 517 |
| 23-18-23 | CLIP, Door Lock Remote Control Link | ★ | ---- --- | ---- --- | 6000 094 | 6000 094 | 6000 394 |
| 23-18-25 | CONTROL, Rear Door Lock Locking, w/LINK | | | | | | |
| | 4 D., Sp. 4 D., D3, D4 Right | 1 | 1884 486 | 1884 486 | ---- --- | ---- --- | ---- --- |
| | Left | 1 | 1884 487 | 1884 487 | ---- --- | ---- --- | ---- --- |
| | Sub. Right | 1 | 1884 488 | ---- --- | ---- --- | ---- --- | ---- --- |
| | Left | 1 | 1884 489 | ---- --- | ---- --- | ---- --- | ---- --- |
| | D1, D2 Right | 1 | ---- --- | 1884 488 | 1884 488 | 1884 488 | 1961 724 |
| | Left | 1 | ---- --- | 1884 489 | 1884 489 | 1884 489 | 1961 725 |
| 23-18-26 | LINK or ROD, Front Door Lock to Lock Cylinder | | | | | | |
| | Except Sp. Cl. Cp., Cv. Cp. Right | 1 | 1954 818 | 1954 818 | 1954 830 | 1954 830 | 1961 862 |
| | Left | 1 | 1954 819 | 1954 819 | 1954 831 | 1954 831 | 2093 412 |
| | Sp. Cl. Cp., Cv. Cp. Right | 1 | 1954 818 | 1954 818 | 1954 830 | 1954 830 | 1961 863 |
| | Left | 1 | 1954 819 | 1954 819 | 1954 831 | 1954 831 | 2093 413 |
| 23-18-27 | KNOB, Rear Door Lock Locking Control | 2 | 1952 601 | 1952 601 | 1952 601 | 1952 601 | 1952 601 |
| | SCREW | 2 | 158 414 | 158 414 | 158 414 | 158 414 | 158 414 |
| 23-18-28 | SPRING, Rear Door Lock Locking Control | | | | | | |
| | Right | 1 | 1458 246 | 1458 246 | 1458 246 | 1458 246 | ---- --- |
| | Left | 1 | 1458 247 | 1458 247 | 1458 247 | 1458 247 | ---- --- |
| 23-18-29 | RETAINER, Door Outside Handle to Lock | ★ | 1954 851 | 1954 851 | 1954 851 | 1954 851 | 1954 851 |
| | CLIP, Front Door Lock Cylinder to Locking Lever | 2 | 6000 551 | 6000 551 | 6000 551 | 6000 551 | 6000 551 |
| 23-18-37 | WASHER, Rear Door Lock Locking Control Knob | 2 | 1952 603 | 1952 603 | 1952 603 | 1952 603 | 1952 603 |
| 23-18-40 | ANTI-RATTLER, Door Remote Control Link | ★ | 1952 778 | 1952 778 | 1952 778 | 1952 778 | ---- --- |
| 23-18-42 | CLIP, Rear Door Remote Control and Lock Link Anti-Rattle | 4 | ---- --- | ---- --- | ---- --- | ---- --- | ⊟6006 506 |
| 23-18-45 | CLIP, Door Lock Release Lever Ball | ★ | ---- --- | ---- --- | ---- --- | ---- --- | 1954 851 |
| 23-18-74 | NUT, Door Lock Remote Control | ★ | ---- --- | ---- --- | 6000 437 | 6000 437 | ---- --- |
| 23-18-103 | SWITCH, Electric Door Lock | 2 | ---- --- | ---- --- | ---- --- | ---- --- | 2096 398 |
| 23-18-104 | SPRING, Electric Door Lock Switch and Bezel Retaining | 8 | ---- --- | ---- --- | ---- --- | ---- --- | *2096 169 |
| 23-18-106 | RELAY, Electric Door Lock | 1 | ---- --- | ---- --- | ---- --- | ---- --- | 2198 105 |
| 23-18-107 | LINK, Electric Door Lock Solenoid to Lock | | | | | | |
| | 4 D., Sp. 4 D. Front | 2 | ---- --- | ---- --- | ---- --- | ---- --- | 1972 952 |
| | Rear | 2 | ---- --- | ---- --- | ---- --- | ---- --- | 1972 953 |
| | Sp. Cl. Cp., Cv. Cp. | 2 | ---- --- | ---- --- | ---- --- | ---- --- | 1972 954 |
| 23-18-109 | CLIP, Door Lock Solenoid to Lock Link Right | ★ | ---- --- | ---- --- | ---- --- | ---- --- | 6015 106 |
| | Left | ★ | ---- --- | ---- --- | ---- --- | ---- --- | 6015 107 |
| 23-18-111 | CONNECTOR, Electric Door Lock Switch Single | 2 | ---- --- | ---- --- | ---- --- | ---- --- | 2096 905 |
| 23-18-112 | BREAKER, Electric Door Lock Circuit | 1 | ---- --- | ---- --- | ---- --- | ---- --- | *1566 038 |
| 23-18-115 | SOLENOID, Electric Door Lock, w/BRACKET | | | | | | |
| | 4 D., Sp. 4 D. Front | 2 | ---- --- | ---- --- | ---- --- | ---- --- | 1972 940 |
| | SCREW and WASHER | 4 | ---- --- | ---- --- | ---- --- | ---- --- | *2096 129 |
| | Rear, Right | 1 | ---- --- | ---- --- | ---- --- | ---- --- | 1972 938 |
| | Left | 1 | ---- --- | ---- --- | ---- --- | ---- --- | 1972 939 |
| | SCREW and WASHER | 4 | ---- --- | ---- --- | ---- --- | ---- --- | ⊟6015 005 |
| | Sp. Cl. Cp., Cv. Cp. Right | 1 | ---- --- | ---- --- | ---- --- | ---- --- | 1972 942 |
| | Left | 1 | ---- --- | ---- --- | ---- --- | ---- --- | 1972 943 |
| | SCREW and WASHER | 4 | ---- --- | ---- --- | ---- --- | ---- --- | ⊟6015 005 |
| 23-18-120 | PACKAGE, Electric Door Lock Solenoid Terminal and Insulator | ★ | ---- --- | ---- --- | ---- --- | ---- --- | 1843 226 |

★ Indicates use as required.
⊟ Indicates parts not listed in any previous parts book.
Dec. 9, 1960 Supersedes April 20, 1960.



Printed in U.S.A.
Prices and specifications subject to change without notice.
* Indicates change or addition.
MyMopar.com

## 23-19-0 DECK LID

| CODE | REMARKS | PER CAR | PLYMOUTH | DODGE | DESOTO | CHRYSLER | IMPERIAL |
|---|---|---|---|---|---|---|---|
| 23-19-8 | LID, Deck | | | | | | |
| | D1, D2 | 1 | 1882 196 | 1882 197 | 2165 686 | 2165 686 | 1877 584 |
| | D3, D4 | 1 | ---- --- | 1963 664 | ---- --- | ---- --- | ---- --- |
| | All w/Spare Tire PANEL | 1 | ---- --- | ---- --- | ---- --- | 1954 447 | 1877 585 |
| 23-19-11 | LIFT PACKAGE, Deck Lid | 1 | ---- --- | ---- --- | 2196 515 | 2196 515 | ---- --- |
| | NUT and SEAL | 2 | ---- --- | ---- --- | 6006 403 | 6006 403 | ---- --- |
| | All | 1 | ---- --- | ---- --- | ---- --- | ---- --- | 2196 806 |
| | NUT | 2 | ---- --- | ---- --- | ---- --- | ---- --- | 151 497 |
| | Use w/False Spare Wheel | 1 | ---- --- | ---- --- | ---- --- | ---- --- | 2196 805 |
| | NUT | 2 | ---- --- | ---- --- | ---- --- | ---- --- | 151 497 |
| 23-19-21 | PLUG, Deck Lid Inside Panel Drain Hole | | | | | | |
| | Small | 2 | 1878 752 | 1878 752 | 1878 752 | 1878 752 | ---- --- |
| | Large | 2 | ---- --- | ---- --- | 1882 735 | 1882 735 | ---- --- |
| 23-19-22 | GASKET, Deck Lid Lift | 1 | ---- --- | ---- --- | ---- --- | ---- --- | 1960 546 |
| | Use w/False Spare Wheel | 1 | ---- --- | ---- --- | ---- --- | ---- --- | 1877 749 |
| 23-19-45 | RING or MOULDING PACKAGE, Deck Lid | | | | | | |
| | Spare Tire Cover | 1 | ---- --- | ---- --- | ---- --- | 2196 663 | ---- --- |
| | CLIP and BOLT | 6 | ---- --- | ---- --- | ---- --- | 6006 428 | ---- --- |
| | NUT | 6 | ---- --- | ---- --- | ---- --- | 151 497 | ---- --- |
| | Ring | 1 | ---- --- | ---- --- | ---- --- | ---- --- | 2196 493 |
| | NUT and SEAL | 6 | ---- --- | ---- --- | ---- --- | ---- --- | 6000 490 |
| | | 1 | ---- --- | ---- --- | ---- --- | ---- --- | 2196 494 |
| | RETAINER and BOLT | 8 | ---- --- | ---- --- | ---- --- | ---- --- | 6006 520 |
| | NUT and SEAL | 8 | ---- --- | ---- --- | ---- --- | ---- --- | ---- --- |
| 23-19-52 | WELT, Deck Lid Spare Tire Cover | 1 | 2165 356 | ---- --- | ---- --- | ---- --- | ---- --- |
| 23-19-53 | MEDALLION, Deck Lid Spare Tire Cover | 1 | 1963 527 | ---- --- | ---- --- | ---- --- | 1877 699 |
| 23-19-55 | PANEL, Deck Lid Spare Tire Cover | 1 | 1963 461 | ---- --- | ---- --- | ---- --- | ---- --- |
| | NUT and WASHER | 2 | 6010 007 | ---- --- | ---- --- | ---- --- | ---- --- |
| 23-19-57 | INSERT or ORNAMENT, Deck Lid Spare Tire Cover | 1 | 1963 478 | ---- --- | ---- --- | ---- --- | ---- --- |
| | Except C3-300 Pkg. | 1 | ---- --- | ---- --- | ---- --- | 2196 662 | ---- --- |
| | NUT | 4 | ---- --- | ---- --- | ---- --- | 151 497 | ---- --- |
| | C3-300 Pkg. | 1 | ---- --- | ---- --- | ---- --- | 2196 661 | ---- --- |
| | NUT | 4 | ---- --- | ---- --- | ---- --- | 151 497 | ---- --- |
| 23-19-58 | GASKET, Deck Lid Spare Tire Cover Medallion Retainer Ring | 1 | ---- --- | ---- --- | ---- --- | ---- --- | 2094 658 |
| 23-19-60 | TUBE, Deck Lid Spare Tire Ornament Drain | 1 | ---- --- | ---- --- | ---- --- | 1961 489 | ---- --- |
| 23-19-61 | RETAINER, Deck Lid Spare Tire Cover, w/STUDS | 1 | 1963 528 | ---- --- | ---- --- | ---- --- | ---- --- |
| 23-19-63 | BUMPER, Deck Lid | 2 | 1954 763 | 1954 764 | ---- --- | ---- --- | ---- --- |
| | Lower | 1 | ---- --- | ---- --- | 2094 759 | 2094 759 | ---- --- |
| | All | 2 | ---- --- | ---- --- | ---- --- | ---- --- | 1960 624 |
| | Upper Corner | 2 | ---- --- | ---- --- | ---- --- | ---- --- | 1961 737 |
| | | 2 | ---- --- | ---- --- | ---- --- | ---- --- | 1960 714 |
| 23-19-64 | REFLECTOR, Deck Lid Spare Tire Cover Medallion | 1 | ---- --- | ---- --- | ---- --- | ---- --- | 2093 718 |
| 23-19-70 | CATCH, Deck Lid Lock | 1 | 1867 661 | 1867 661 | 1867 661 | 1867 661 | 1867 661 |
| 23-19-74 | SUPPORT, Deck Lid Lower Panel Lock Striker | 1 | 1960 784 | 1960 785 | 1960 098 | 1960 098 | 1960 149 |
| 23-19-75 | PLATE or REINFORCEMENT, Deck Lid Lock | 1 | ---- --- | ---- --- | 1960 486 | 1960 486 | 1960 560 |
| 23-19-76 | BRACKET, Deck Lid Hinge Support to Wheel House | | | | | | |
| | except Cv. Cp. Upper | 2 | ---- --- | ---- --- | ---- --- | ---- --- | 1750 991 |
| | Cv. Cp. Right | 1 | ---- --- | ---- --- | ---- --- | ---- --- | 1751 130 |
| | Left | 1 | ---- --- | ---- --- | ---- --- | ---- --- | 1751 131 |
| 23-19-82 | SUPPORT, Deck Lid Hinge Body Bracket | | | | | | |
| | except Cv. Cp. Upper, Right | 1 | 1909 410 | 1909 410 | ---- --- | ---- --- | ---- --- |
| | Left | 1 | 1909 411 | 1909 411 | ---- --- | ---- --- | ---- --- |
| | Lower, Right | 1 | 1884 630 | 1884 630 | ---- --- | ---- --- | ---- --- |
| | Left | 1 | 1884 631 | 1884 631 | ---- --- | ---- --- | ---- --- |
| | Upper, Right | 1 | ⊟2165 636 | ⊟2165 636 | ---- --- | ⊟2165 636 | ---- --- |
| | Left | 1 | ⊟2165 637 | ⊟2165 637 | ---- --- | ⊟2165 637 | ---- --- |
| | Lower, Right | 1 | 1950 518 | 1884 632 | ---- --- | 1909 548 | ---- --- |
| | Left | 1 | 1950 519 | 1884 633 | ---- --- | 1909 549 | ---- --- |



MyMopar.com

## 23-19-0 DECK LID - Cont'd

| CODE | REMARKS | | PER CAR | PLYMOUTH | DODGE | DESOTO | CHRYSLER | IMPERIAL |
|---|---|---|---|---|---|---|---|---|
| 23-19-82 | SUPPORT - Cont'd | | | | | | | |
| | Except Cv. Cp. | Right | 1 | ---- --- | ---- --- | ---- --- | ---- --- | 1961 078 |
| | | Left | 1 | ---- --- | ---- --- | ---- --- | ---- --- | 1961 079 |
| | Cv. Cp. | Right | 1 | ---- --- | ---- --- | ---- --- | ---- --- | 1961 080 |
| | | Left | 1 | ---- --- | ---- --- | ---- --- | ---- --- | 1961 081 |
| 23-19-84 | HINGE, Deck Lid | | | | | | | |
| | except Cv. Cp. | Right | 1 | 1884 620 | 1884 620 | 1884 620 | 1884 620 | ---- --- |
| | | Left | 1 | 1884 621 | 1884 621 | 1884 621 | 1884 621 | ---- --- |
| | Cv. Cp., D2 | Right | 1 | 1909 308 | 2165 570 | ---- --- | 2165 570 | ---- --- |
| | | Left | 1 | 1909 309 | 2165 571 | ---- --- | 2165 571 | ---- --- |
| | Cv. Cp., D4 | Right | 1 | ---- --- | 1909 308 | ---- --- | ---- --- | ---- --- |
| | | Left | 1 | ---- --- | 1909 309 | ---- --- | ---- --- | ---- --- |
| | All | | 2 | ---- --- | ---- --- | ---- --- | ---- --- | 2093 530 |
| 23-19-85 | PIN, Deck Lid Hinge | | 2 | ---- --- | ---- --- | ---- --- | ---- --- | 1691 899 |
| 23-19-89 | BOLT Deck Lid Link to Arm Shoulder | | 2 | ---- --- | ---- --- | ---- --- | ---- --- | 2093 422 |
| | SCREW and WASHER, Deck Lid Hinge | | 4 | 2165 408 | 2165 408 | 2165 408 | 2165 408 | 2165 408 |
| | SCREW and WASHER, Deck Lid Hinge Bracket or Support to Deck Lid | | ★ | 2165 245 | 2165 245 | 2165 245 | 2165 245 | 6006 522 |
| 23-19-92 | SPRING, Deck Lid Hinge | | | | | | | |
| | Cv. Cp. | | 2 | 1909 678 | 1909 678 | ---- --- | 1909 678 | ---- --- |
| 23-19-105 | LOCK, Deck Lid | | 1 | 1843 920 | 1843 920 | 1961 038 | 1961 038 | 1961 057 |
| 23-19-114 | NAME PLATE PACKAGE, Deck Lid | | | | | | | |
| | | Plymouth | 1 | 2196 118 | ---- --- | ---- --- | ---- --- | ---- --- |
| | CLIP | | 3 | 6000 037 | ---- --- | ---- --- | ---- --- | ---- --- |
| | D1, D2 | Letter, D | 2 | ---- --- | 2196 258 | ---- --- | ---- --- | ---- --- |
| | CLIP | | 4 | ---- --- | 6010 174 | ---- --- | ---- --- | ---- --- |
| | NUT and SEAL | | 4 | ---- --- | 6000 490 | ---- --- | ---- --- | ---- --- |
| | | O | 1 | ---- --- | 2196 259 | ---- --- | ---- --- | ---- --- |
| | CLIP | | 2 | ---- --- | 6010 174 | ---- --- | ---- --- | ---- --- |
| | NUT and SEAL | | 2 | ---- --- | 6000 490 | ---- --- | ---- --- | ---- --- |
| | | G | 1 | ---- --- | 2196 260 | ---- --- | ---- --- | ---- --- |
| | CLIP | | 2 | ---- --- | 6010 174 | ---- --- | ---- --- | ---- --- |
| | NUT and SEAL | | 2 | ---- --- | 6000 490 | ---- --- | ---- --- | ---- --- |
| | | E | 1 | ---- --- | 2196 261 | ---- --- | ---- --- | ---- --- |
| | CLIP | | 2 | ---- --- | 6010 174 | ---- --- | ---- --- | ---- --- |
| | NUT and SEAL | | 2 | ---- --- | 6000 490 | ---- --- | ---- --- | ---- --- |
| | D3, D4 | Dodge | 1 | ---- --- | 2196 108 | ---- --- | ---- --- | ---- --- |
| | NUT and SEAL | | 4 | ---- --- | 6000 490 | ---- --- | ---- --- | ---- --- |
| | All | Letter, D | 1 | ---- --- | ---- --- | 2196 509 | ---- --- | ---- --- |
| | NUT | | 2 | ---- --- | ---- --- | 6000 490 | ---- --- | ---- --- |
| | | E | 1 | ---- --- | ---- --- | 2196 510 | ---- --- | ---- --- |
| | NUT | | 2 | ---- --- | ---- --- | 6000 490 | ---- --- | ---- --- |
| | | S | 1 | ---- --- | ---- --- | 2196 511 | ---- --- | ---- --- |
| | NUT | | 2 | ---- --- | ---- --- | 6000 490 | ---- --- | ---- --- |
| | | O | 2 | ---- --- | ---- --- | 2196 512 | ---- --- | ---- --- |
| | NUT | | 4 | ---- --- | ---- --- | 6000 490 | ---- --- | ---- --- |
| | | T | 1 | ---- --- | ---- --- | 2196 513 | ---- --- | ---- --- |
| | NUT | | 2 | ---- --- | ---- --- | 6000 490 | ---- --- | ---- --- |
| | | Le | 1 | ---- --- | ---- --- | ---- --- | ---- --- | 2196 484 |
| | NUT and SEAL | | 2 | ---- --- | ---- --- | ---- --- | ---- --- | 6000 490 |
| | | Baron | 1 | ---- --- | ---- --- | ---- --- | ---- --- | 2196 485 |
| | NUT and SEAL | | 3 | ---- --- | ---- --- | ---- --- | ---- --- | 6000 490 |
| | MEDALLION or ORNAMENT PACKAGE, Deck Lid | 500 | 1 | ---- --- | 2196 107 | ---- --- | ---- --- | ---- --- |
| | NUT and SEAL | | 2 | ---- --- | 6000 490 | ---- --- | ---- --- | ---- --- |
| | C3 | | 1 | ---- --- | ---- --- | ---- --- | 2196 650 | ---- --- |
| | CLIP | | 2 | ---- --- | ---- --- | ---- --- | 6000 050 | ---- --- |
| | C1, C2 | | 1 | ---- --- | ---- --- | ---- --- | 2196 837 | ---- --- |
| | CLIP | | 2 | ---- --- | ---- --- | ---- --- | 6000 050 | ---- --- |
| 23-19-117 | BASE, Deck Lid Name Plate | Le | 1 | ---- --- | ---- --- | ---- --- | ---- --- | 1961 322 |
| | | Baron | 1 | ---- --- | ---- --- | ---- --- | ---- --- | 1961 323 |
| 23-19-133 | COVER, Deck Lid Lock Striker Support | | 1 | ---- --- | ---- --- | ---- --- | ---- --- | □2086 735 |



MyMopar.com

| CODE | REMARKS | | PER CAR | PLYMOUTH | DODGE | DESOTO | CHRYSLER | IMPERIAL |
|---|---|---|---|---|---|---|---|---|
| **23-19-0 DECK LID - Cont'd** | | | | | | | | |
| 23-19-177 | BAR, Deck Lid Hinge Torsion | | | | | | | |
| | D1, D2, except Cv.Cp. | Right | 1 | 1884 614 | 1884 616 | 1884 614 | 1884 614 | ---- --- |
| | | Left | 1 | 1884 615 | 1884 617 | 1884 615 | 1884 615 | ---- --- |
| | D3, D4, except Cv.Cp. | Right | 1 | ---- --- | 1964 512 | ---- --- | ---- --- | 1877 540 |
| | | Left | 1 | ---- --- | 1964 513 | ---- --- | ---- --- | 1877 541 |
| 23-19-178 | ROLLER or SUPPORT, Deck Lid Hinge Torsion Bar End | | | | | | | |
| | except Cv.Cp. | | 2 | 1952 228 | 1952 228 | 1952 228 | 1952 228 | 6006 243 |
| | Cv.Cp. | | 2 | ---- --- | ---- --- | ---- --- | ---- --- | 6006 243 |
| | All RETAINER, Center | | 2 | ---- --- | ---- --- | ---- --- | ---- --- | 6000 594 |
| 23-19-185 | LINK, Deck Lid Hinge to Torsion Bar | | | | | | | |
| | except Cv.Cp. | | 2 | ---- --- | ---- --- | ---- --- | ---- --- | 1877 521 |
| | Cv.Cp. | | 2 | ---- --- | ---- --- | ---- --- | ---- --- | 1877 520 |
| **23-20-0 FLOOR MATS** | | | | | | | | |
| 23-20-8 | MAT, Front Floor | | | | | | | |
| | Taxi | Black | 1 | 2192 413 | ---- --- | ---- --- | ---- --- | ---- --- |
| | except P1-H, P2-H | Black | 1 | 2163 520 | ---- --- | ---- --- | ---- --- | ---- --- |
| | P1-M, P2-M, except Sub. | Green | 1 | 2163 519 | ---- --- | ---- --- | ---- --- | ---- --- |
| | | Turquoise | 1 | 2163 522 | ---- --- | ---- --- | ---- --- | ---- --- |
| | | Blue | 1 | 2163 518 | ---- --- | ---- --- | ---- --- | ---- --- |
| | Sub., C1 | Black | 1 | 2163 520 | ---- --- | ---- --- | 2163 520 | ---- --- |
| | 4 D. Sub. | Blue | 1 | 2163 518 | ---- --- | ---- --- | ---- --- | ---- --- |
| | | Green | 1 | 2163 519 | ---- --- | ---- --- | ---- --- | ---- --- |
| | | Turquoise | 1 | 2163 522 | ---- --- | ---- --- | ---- --- | ---- --- |
| | All | Blue | 1 | ---- --- | 2163 518 | ---- --- | ---- --- | ---- --- |
| | | Green | 1 | ---- --- | 2163 519 | ---- --- | ---- --- | ---- --- |
| | | Black | 1 | ---- --- | 2163 520 | ---- --- | ---- --- | ---- --- |
| | | Brown | 1 | ---- --- | 2091 545 | ---- --- | ---- --- | ---- --- |
| 23-20-11 | MAT, Intermediate Floor | | | | | | | |
| | 4 D. Sub., 2 D. Sub. | Blue | 1 | *2163 606 | *2163 606 | ---- --- | ---- --- | ---- --- |
| | | Green | 1 | 2163 607 | 2163 607 | ---- --- | ---- --- | ---- --- |
| | | Turquoise | 1 | *2163 609 | ---- --- | ---- --- | ---- --- | ---- --- |
| | | Black | 1 | 2163 608 | 2163 608 | ---- --- | ---- --- | ---- --- |
| | | Brown | 1 | ---- --- | ⊟2091 764 | ---- --- | ---- --- | ---- --- |
| | Sp. 4 D. Sub., C1 | Black | 1 | ---- --- | ---- --- | ---- --- | 2163 608 | ---- --- |
| 23-20-14 | PLATE, Door Sill Scuff | | | | | | | |
| | 4 D. | Front, Right | 1 | 1882 886 | 1882 888 | 1882 890 | 1882 892 | 1839 950 |
| | | Left | 1 | 1882 887 | 1882 889 | 1882 891 | 1882 893 | 1839 951 |
| | 4 D., D3, D4 | Rear, Right | 1 | 1882 902 | 1882 902 | 1884 454 | 1884 454 | 1839 954 |
| | | Left | 1 | 1882 903 | 1882 903 | 1884 455 | 1884 455 | 1839 955 |
| | 4 D. Sub. | Front, Right | 1 | 1882 886 | 1882 888 | ---- --- | ---- --- | ---- --- |
| | | Left | 1 | 1882 887 | 1882 889 | ---- --- | ---- --- | ---- --- |
| | | Rear, Right | 1 | 1884 454 | 1884 454 | ---- --- | ---- --- | ---- --- |
| | | Left | 1 | 1884 455 | 1884 455 | ---- --- | ---- --- | ---- --- |
| | Sp. 4 D. | Front, Right | 1 | 1884 420 | 1884 422 | 1884 424 | 1884 426 | 1839 950 |
| | | Left | 1 | 1884 421 | 1884 423 | 1884 425 | 1884 427 | 1839 951 |
| | Sp. 4 D., D3, D4 | Rear, Right | 1 | 1884 452 | 1884 452 | 1884 456 | 1884 456 | 1839 954 |
| | | Left | 1 | 1884 453 | 1884 453 | 1884 457 | 1884 457 | 1839 955 |
| | Sp. 4 D. Sub. | Front, Right | 1 | ---- --- | 1884 422 | ---- --- | 1884 426 | ---- --- |
| | | Left | 1 | ---- --- | 1884 423 | ---- --- | 1884 427 | ---- --- |
| | Sp. 4 D. Sub., D1, D2 | Rear, Right | 1 | ---- --- | 1884 456 | ---- --- | 1884 456 | ---- --- |
| | | Left | 1 | ---- --- | 1884 457 | ---- --- | 1884 457 | ---- --- |
| | Sp. Cl. Cp., Cv. Cp., Cl. Sed., S1 | Right | 1 | 1882 894 | 1882 896 | 1882 898 | 1882 900 | 1839 952 |
| | | Left | 1 | 1882 895 | 1882 897 | 1882 899 | 1882 901 | 1839 953 |
| | Sp. 4 D., D1, D2 | Rear, Right | 1 | ---- --- | 1884 456 | ---- --- | ---- --- | ---- --- |
| | | Left | 1 | ---- --- | 1884 457 | ---- --- | ---- --- | ---- --- |
| | 4 D., D1, D2 | Rear, Right | 1 | ---- --- | 1884 454 | ---- --- | ---- --- | ---- --- |
| | | Left | 1 | ---- --- | 1884 455 | ---- --- | ---- --- | ---- --- |
| 23-20-16 | INSERT, Door Sill Plate Tread | | | | | | | |
| | C3-300 | | ★ | ---- --- | ---- --- | ---- --- | 1766 986 | 1839 956 |

★ Indicates use as required.
⊟ Indicates parts not listed in any previous parts book.
* Indicates change or addition.



MyMopar.com

Printed in U.S.A.
Prices and specifications subject to change without notice.
Dec. 9, 1960 Supersedes April 20, 1960.

| CODE | REMARKS | | PER CAR | PLYMOUTH | DODGE | DESOTO | CHRYSLER | IMPERIAL |
|---|---|---|---|---|---|---|---|---|
| **23-20-0** | **FLOOR MATS - Cont'd** | | | | | | | |
| 23-20-19 | SUPPORT, Door Sill Scuff Plate | | | | | | | |
| | Cl.Sed., Sp.Cl.Cp., Cv.Cp., 2 D.Sub. | Right | 1 | 1954 316 | 1954 316 | 1954 316 | 1954 316 | ---- --- |
| | | Left | 1 | 1954 317 | 1954 317 | 1954 317 | 1954 317 | ---- --- |
| | 4 D., Sp. 4 D., 4 D.Sub., Sp. 4 D.Sub. | Front, Right | 1 | 1954 286 | 1954 286 | 1954 286 | 1954 286 | ---- --- |
| | | Left | 1 | 1954 287 | 1954 287 | 1954 287 | 1954 287 | ---- --- |
| | | Rear, Right | 1 | 1954 288 | 1954 288 | 1954 288 | 1954 288 | ---- --- |
| | | Left | 1 | 1954 289 | 1954 289 | 1954 289 | 1954 289 | ---- --- |
| | 4 D., Sp. 4 D. | Front | 2 | ---- --- | ---- --- | ---- --- | ---- --- | 1692 173 |
| | | Rear, Right | 1 | ---- --- | ---- --- | ---- --- | ---- --- | 1692 172 |
| | Sp.Cl.Cp., Cv.Cp. | | 2 | ---- --- | ---- --- | ---- --- | ---- --- | 1690 742 |
| 23-20-20 | EXTENSION, Door Sill Scuff Plate Support, Galvanized | | | | | | | |
| | 2 D.Sub. | Right | 1 | 1963 354 | ---- --- | ---- --- | ---- --- | ---- --- |
| | | Left | 1 | 1963 343 | ---- --- | ---- --- | ---- --- | ---- --- |
| | 4 D. Sub., Sp. 4 D. Sub. | Rear, Right | 1 | 1963 380 | 1963 380 | ---- --- | 1963 380 | ---- --- |
| | | Left | 1 | 1963 381 | 1963 381 | ---- --- | 1963 381 | ---- --- |
| 23-20-24 | EXTENSION, Door Sill Scuff Plate, Aluminum | | | | | | | |
| | Cl.Sed. | Right | 1 | 1963 352 | 1963 352 | ---- --- | ---- --- | ---- --- |
| | | Left | 1 | 1963 353 | 1963 353 | ---- --- | ---- --- | ---- --- |
| | 2 D. Sub. | Right | 1 | 1963 310 | ---- --- | ---- --- | ---- --- | ---- --- |
| | | Left | 1 | 1963 311 | ---- --- | ---- --- | ---- --- | ---- --- |
| | Sp.Cl.Cp., Cv.Cp. | Right | 1 | 1954 866 | 1954 866 | 1954 866 | 1954 866 | ---- --- |
| | | Left | 1 | 1954 867 | 1954 867 | 1954 867 | 1954 867 | ---- --- |
| | 4 D., Sp. 4 D. | Rear, Right | 1 | 1963 308 | 1963 308 | 1963 308 | 1963 308 | ---- --- |
| | | Left | 1 | 1963 309 | 1963 309 | 1963 309 | 1963 309 | ---- --- |
| | 4 D.Sub., Sp. 4 D.Sub. | Rear, Right | 1 | 1963 378 | 1963 378 | 1963 378 | 1963 378 | ---- --- |
| | | Left | 1 | 1963 379 | 1963 379 | 1963 379 | 1963 379 | ---- --- |
| | 4 D.Sub., Sp. 4 D.Sub., use w/Air Conditioning | Right | 1 | 2094 276 | 2094 276 | ---- --- | 2094 276 | ---- --- |
| | | Left | 1 | 2094 277 | 2094 277 | ---- --- | 2094 277 | ---- --- |
| | C3-300 | Right | 1 | ---- --- | ---- --- | ---- --- | 1963 648 | ---- --- |
| | | Left | 1 | ---- --- | ---- --- | ---- --- | 1963 649 | ---- --- |
| | All | On Cowl, Right | 1 | 1963 654 | 1963 654 | 1963 654 | 1963 654 | ---- --- |
| | | Left | 1 | 1963 655 | 1963 655 | 1963 655 | 1963 655 | ---- --- |
| 23-20-29 | MAT, Rear Deck Floor | | 1 | 2163 847 | 2192 630 | 2169 672 | 2169 672 | ---- --- |
| 23-20-41 | MAT, Rear Floor | | | | | | | |
| | except Sub., P1-H, P2-H | Black | 1 | 2163 526 | ---- --- | ---- --- | ---- --- | ---- --- |
| | P1-L, P1-M, P2-L, P2-M, except Sub. | Turquoise | 1 | *2163 528 | ---- --- | ---- --- | ---- --- | ---- --- |
| | | Blue | 1 | 2163 524 | ---- --- | ---- --- | ---- --- | ---- --- |
| | | Red | 1 | 2163 527 | ---- --- | ---- --- | ---- --- | ---- --- |
| | | Green | 1 | 2163 525 | ---- --- | ---- --- | ---- --- | ---- --- |
| | Sub., P1-L, P2-L | Black | 1 | 2163 700 | ---- --- | ---- --- | ---- --- | ---- --- |
| | 4 D., Sp.Cl.Cp., Cv.Cp. | Blue | 1 | ---- --- | *2163 524 | ---- --- | ---- --- | ---- --- |
| | | Green | 1 | ---- --- | 2163 525 | ---- --- | ---- --- | ---- --- |
| | | Black | 1 | ---- --- | 2163 526 | ---- --- | ---- --- | ---- --- |
| | | Brown | 1 | ---- --- | 2091 552 | ---- --- | ---- --- | ---- --- |
| | Cl. Sed. | Blue | 1 | ---- --- | 2163 524 | ---- --- | ---- --- | ---- --- |
| | | Green | 1 | ---- --- | 2163 525 | ---- --- | ---- --- | ---- --- |
| | | Black | 1 | ---- --- | 2163 526 | ---- --- | ---- --- | ---- --- |
| | | Brown | 1 | ---- --- | 2192 408 | ---- --- | ---- --- | ---- --- |
| | Sub., 3rd Seat Well | Black | 1 | 2163 919 | 2163 919 | ---- --- | 2163 919 | ---- --- |
| 23-20-65 | PLATE, Center Pillar Scuff | | | | | | | |
| | 4 D., 4 D.Sub. | | 2 | 1954 648 | 1954 648 | 1954 648 | 1954 648 | ---- --- |
| | Sp. 4 D., Sp. 4 D.Sub. | Right | 1 | 1954 650 | 1954 650 | 1954 650 | 1954 650 | ---- --- |
| | | Left | 1 | 1954 651 | 1954 651 | 1954 651 | 1954 651 | ---- --- |
| **23-21-0** | **MIRRORS** | | | | | | | |
| 23-21-3 | MIRROR PACKAGE, Rear View Inside Mirror-Matic | | 1 | 2161 079 | 2161 079 | 2161 079 | 2161 079 | 2161 079 |
| | Consists of: | | | | | | | |
| | 1 - ---- --- Mirror | | | | | | | |
| | 1 - ---- --- Cable | | | | | | | |
| | 1 - ---- --- Terminal | | | | | | | |
| | 1 - ---- --- Instruction Sheet | | | | | | | |

★ Indicates use as required.
⊟ Indicates parts not listed in any previous parts book.
Dec. 9, 1960 Supersedes April 20, 1960.



Printed in U.S.A.
Prices and specifications subject to change without notice.
* Indicates change or addition.
MyMopar.com

## 23-21-0 MIRRORS - Cont'd

| CODE | REMARKS | PER CAR | PLYMOUTH | DODGE | DESOTO | CHRYSLER | IMPERIAL |
|---|---|---|---|---|---|---|---|
| 23-21-3 | MIRROR PACKAGE - Cont'd | | | | | | |
| | Outside Remote Control | ★ | 2084 787 | 2084 787 | 2084 787 | 2084 787 | ---- --- |
| | Consists of: | | | | | | |
| | 1 - ---- --- Mirror | | | | | | |
| | 1 - 2080 541 Nut | | | | | | |
| | 1 - ---- --- Bracket | | | | | | |
| | 2 - ---- --- Screw | | | | | | |
| | 2 - 274 791 Screw | | | | | | |
| | 1 - ---- --- Instruction Sheet | | | | | | |
| | Outside Hood Type, Double Strut | ★ | 2196 255 | 2196 255 | 2196 255 | 2196 255 | 2196 255 |
| | Also Matching Mirror for Remote Control Mirror | | | | | | |
| | Consists of: | | | | | | |
| | 1 - ---- --- Mirror | | | | | | |
| | 2 - 274 791 Screw | | | | | | |
| | 1 - ---- --- Anti-Squeak | | | | | | |
| | 1 - ---- --- Instruction Sheet | | | | | | |
| 23-21-8 | MIRROR, Rear View Inside | | | | | | |
| | Chrome | 1 | 1876 331 | 1876 331 | 1876 331 | 1876 331 | 1876 331 |
| | Prismatic Stainless Steel | 1 | 1902 138 | 1902 138 | 1902 138 | 1902 138 | 1902 138 |
| | Chrome | 1 | ---- --- | ---- --- | 1902 053 | ---- --- | ---- --- |
| 23-21-14 | BASE, Rear View Inside Mirror | | | | | | |
| | Chrome | 1 | 2086 275 | 2086 275 | 2086 275 | 2086 275 | ---- --- |
| | NUT | 1 | 145 509 | 145 509 | 145 509 | 145 509 | ---- --- |
| | w/PAD, Chrome | 1 | ---- --- | ---- --- | 2080 411 | 2080 411 | ---- --- |
| | Except Cv. Cp. | 1 | ---- --- | ---- --- | ---- --- | ---- --- | 2080 774 |
| | Cv. Cp. | 1 | ---- --- | ---- --- | ---- --- | ---- --- | 2080 897 |
| | All Mirror-Matic | 1 | ---- --- | ---- --- | ---- --- | ---- --- | 2161 609 |
| 23-21-15 | MIRROR, Rear View Outside | | | | | | |
| | Double Strut | ★ | 1773 071 | 1773 071 | 1773 071 | 1773 071 | ---- --- |
| | SCREW | 2 | 274 791 | 274 791 | 274 791 | 274 791 | ---- --- |
| | Hood Type Single Strut | 1 | 1839 852 | 1839 852 | 1839 852 | 1839 852 | 1839 852 |
| | SCREW | 2 | 274 791 | 274 791 | 274 791 | 274 791 | 274 791 |
| | Single Strut | ★ | 1772 447 | 1772 447 | 1772 447 | 1772 447 | 1772 447 |
| | BRACKET | 1 | *1609 540 | *1609 540 | *1609 540 | *1609 540 | *1609 540 |
| | SCREW | 1 | * 125 978 | * 125 978 | * 125 978 | * 125 978 | * 125 978 |
| | Remote Control | 1 | ---- --- | ---- --- | ---- --- | ---- --- | 2080 921 |
| 23-21-18 | ANTI-SQUEAK or SEAL, Rear View Outside Mirror Base | | | | | | |
| | Round | ★ | 1609 381 | 1609 381 | 1609 381 | 1609 381 | 1609 381 |
| | Oblong | ★ | 1839 670 | 1839 670 | 1839 670 | 1839 670 | 1839 670 |
| 23-21-26 | RETAINER, Rear View Inside Mirror Shaft | 1 | 1839 965 | 1839 965 | 1839 965 | 1839 965 | ---- --- |
| | Except Cv. Cp. | 1 | ---- --- | ---- --- | ---- --- | ---- --- | 2080 776 |
| 23-21-27 | RING, Rear View Inside Mirror Shaft Wire Retaining (Mirror-Matic) Upper | 1 | ---- --- | ---- --- | ---- --- | ---- --- | 2161 293 |
| | Lower | 1 | ---- --- | ---- --- | ---- --- | ---- --- | 2161 294 |
| 23-21-32 | HANDLE, Rear View Outside Mirror Remote Control | 1 | 2080 721 | 2080 721 | 2080 721 | 2080 721 | 2080 861 |
| 23-21-33 | CLIP, Rear View Inside Mirror Wiring (Mirror-Matic) | 1 | ---- --- | ---- --- | ---- --- | ---- --- | 1798 154 |
| 23-21-45 | SHAFT, Rear View Inside Mirror Chrome | 1 | 2080 875 | 2080 874 | 2080 874 | 2080 874 | ---- --- |
| | w/PAD | 1 | ---- --- | ---- --- | ---- --- | ⊟2161 467 | ---- --- |
| | Except Cv. Cp. Mirror-Matic | 1 | ---- --- | ---- --- | ---- --- | ---- --- | *2161 329 |
| 23-21-46 | SPRING, Rear View Inside Mirror Shaft Tension | 1 | 1839 966 | 1839 966 | 1839 966 | 1839 966 | ---- --- |
| 23-21-47 | PLUG, Rear View Inside Mirror Shaft Tension Adjusting | 1 | 1839 967 | 1839 967 | 1839 967 | 1839 967 | ---- --- |
| 23-21-65 | HOUSING, Rear View Outside Mirror Remote Control | 1 | ---- --- | ---- --- | ---- --- | 2080 471 | ---- --- |
| | STUD | 2 | ---- --- | ---- --- | ---- --- | 6010 020 | ---- --- |
| 23-21-66 | BEZEL, Rear View Outside Mirror Remote Control Housing | 1 | 2080 698 | 2080 539 | 2080 539 | 2080 489 | 2080 699 |
| 23-21-67 | PLATE, Rear View Outside Mirror Remote Control Mounting | 1 | ---- --- | 2080 540 | 2080 540 | ---- --- | ---- --- |
| 23-21-74 | NUT, Rear View Outside Mirror Remote Control Attaching | 1 | 2080 839 | 2080 541 | 2080 541 | 1901 838 | 2080 839 |

★ Indicates use as required.
⊟ Indicates parts not listed in any previous parts book.
* Indicates change or addition.



Printed in U.S.A.
Prices and specifications subject to change without notice.
Dec. 9, 1960 Supersedes April 20, 1960.

MyMopar.com

## 23-22-0 GARNISH MOULDINGS

| CODE | REMARKS | | PER CAR | PLYMOUTH | DODGE | DESOTO | CHRYSLER | IMPERIAL |
|---|---|---|---|---|---|---|---|---|
| 23-22-7 | MOULDING, Door Garnish | | | | | | | |
| | Cl. Sed., 2 D. Sub. | Prime, Right | 1 | 1883 092 | 1883 092 | ---- --- | ---- --- | ---- --- |
| | | Left | 1 | 1883 093 | 1883 093 | ---- --- | ---- --- | ---- --- |
| | 4 D., C1, C2 | Prime, Front, Right | 1 | 1883 148 | 1883 148 | 1883 148 | 1883 148 | ---- --- |
| | | Left | 1 | 1883 149 | 1883 149 | 1883 149 | 1883 149 | ---- --- |
| | 4 D., D1, D2, C1, C2 | Prime, Rear, Right | 1 | 1883 160 | 1883 168 | 1883 168 | 1883 168 | ---- --- |
| | | Left | 1 | 1883 161 | 1883 169 | 1883 169 | 1883 169 | ---- --- |
| | 4 D. Sub. | Prime, Front, Right | 1 | 1883 148 | 1883 148 | ---- --- | ---- --- | ---- --- |
| | | Left | 1 | 1883 149 | 1883 149 | ---- --- | ---- --- | ---- --- |
| | | Rear, Right | 1 | 1883 168 | 1883 168 | ---- --- | ---- --- | ---- --- |
| | | Left | 1 | 1883 169 | 1883 169 | ---- --- | ---- --- | ---- --- |
| | Sp. 4 D., Sp. 4 D. Sub. | Prime, Front, Right | 1 | 1883 116 | 1883 116 | 1883 116 | 1883 116 | ---- --- |
| | | Left | 1 | 1883 117 | 1883 117 | 1883 117 | 1883 117 | ---- --- |
| | Sp. 4 D., Sp. 4 D. Sub., D1, D2 | Rear, Right | 1 | 1883 128 | 1883 132 | 1883 132 | 1883 132 | ---- --- |
| | | Left | 1 | 1883 129 | 1883 133 | 1883 133 | 1883 133 | ---- --- |
| | 4 D., D3, D4 | Prime, Rear, Right | 1 | ---- --- | 1883 160 | ---- --- | ---- --- | ---- --- |
| | | Left | 1 | ---- --- | 1883 161 | ---- --- | ---- --- | ---- --- |
| | Sp. 4 D., D3, D4 | Prime, Rear, Right | 1 | ---- --- | 1883 128 | ---- --- | ---- --- | ---- --- |
| | | Left | 1 | ---- --- | 1883 129 | ---- --- | ---- --- | ---- --- |
| | Sp. Cl. Cp., Cv. Cp., S1, C1 | Prime, Right | 1 | 1883 084 | 1883 084 | 1883 084 | 1883 084 | ---- --- |
| | | Left | 1 | 1883 085 | 1883 085 | 1883 085 | 1883 085 | ---- --- |
| | Sp. 4 D., D3, D4 | Chrome, Rear, Right | 1 | ---- --- | 1964 534 | ---- --- | ---- --- | ---- --- |
| | | Left | 1 | ---- --- | 1964 535 | ---- --- | ---- --- | ---- --- |
| | Sp. 4 D., Sp. 4 D. Sub., | Chrome, Front, Right | 1 | ---- --- | *1963 952 | *1963 952 | ---- --- | ---- --- |
| | | Left | 1 | ---- --- | 1963 953 | 1963 953 | ---- --- | ---- --- |
| | Sp. 4 D., Sp. 4 D. Sub., D1, D2, | Chrome, Rear, Right | 1 | ---- --- | *1964 004 | *1964 004 | ---- --- | ---- --- |
| | | Left | 1 | ---- --- | 1964 005 | 1964 005 | ---- --- | ---- --- |
| | Sp. Cl. Cp., Cv. Cp. | Chrome, Right | 1 | 1963 918 | 1963 918 | 1963 918 | ---- --- | ---- --- |
| | | Left | 1 | 1963 919 | 1963 919 | 1963 919 | ---- --- | ---- --- |
| | 4 D., C2, C3 | Prime, Front, Right | 1 | ---- --- | ---- --- | ---- --- | 1883 156 | ---- --- |
| | | Left | 1 | ---- --- | ---- --- | ---- --- | 1883 157 | ---- --- |
| | | Rear, Right | 1 | ---- --- | ---- --- | ---- --- | 1883 176 | ---- --- |
| | | Left | 1 | ---- --- | ---- --- | ---- --- | 1883 177 | ---- --- |
| | 4 D., C3 | Chrome, Front, Right | 1 | ---- --- | ---- --- | ---- --- | 1963 690 | ---- --- |
| | | Left | 1 | ---- --- | ---- --- | ---- --- | 1963 691 | ---- --- |
| | | Rear, Right | 1 | ---- --- | ---- --- | ---- --- | 1963 692 | ---- --- |
| | | Left | 1 | ---- --- | ---- --- | ---- --- | 1963 693 | ---- --- |
| 23-22-8 | SCREW, Windshield Garnish Moulding | | | | | | | |
| | Cv. Cp. | Side | 6 | 892 569 | 892 569 | ---- --- | 892 569 | ---- --- |
| 23-22-9 | SUPPORT, Rear Door Garnish Moulding Front | | | | | | | |
| | Sp. 4 D. | | 2 | ⊟2166 418 | ⊟2166 418 | ⊟2166 418 | ⊟2166 418 | ---- --- |
| 23-22-13 | CLIP, Rear Window Lower Garnish Moulding | | | | | | | |
| | 4 D., Sp. 4 D., YH | | 9 | ---- --- | ---- --- | ---- --- | ---- --- | 6008 223 |
| 23-22-15 | SUPPORT, Windshield Upper Garnish Moulding and Visor Hook | | | | | | | |
| | Cv. Cp. | | 1 | *1964 348 | *1964 348 | ---- --- | *1964 348 | ---- --- |
| 23-22-53 | MOULDING, Front Quarter Window Garnish | | | | | | | |
| | 2 D. Sub. | Right | 1 | 1883 100 | ---- --- | ---- --- | ---- --- | ---- --- |
| | | Left | 1 | 1883 101 | ---- --- | ---- --- | ---- --- | ---- --- |
| | MOULDING, Rear Quarter Window Garnish | | | | | | | |
| | 4 D. Sub., 2 D. Sub. | Front to Roof Rail, Right | 1 | 1902 304 | 1902 304 | ---- --- | ---- --- | ---- --- |
| | | Left | 1 | 1902 305 | 1902 305 | ---- --- | ---- --- | ---- --- |
| | Sp. 4 D. Sub. | Front to Roof Rail, Right | 1 | ---- --- | 1902 306 | ---- --- | 1902 306 | ---- --- |
| | | Left | 1 | ---- --- | 1902 307 | ---- --- | 1902 307 | ---- --- |
| | Sub. | Front, Right | 1 | 1839 926 | 1839 926 | ---- --- | 1839 926 | ---- --- |
| | | Left | 1 | 1839 927 | 1839 927 | ---- --- | 1839 927 | ---- --- |
| | | Upper Center, Right | 1 | 1839 928 | 1839 928 | ---- --- | 1839 928 | ---- --- |
| | | Left | 1 | 1839 929 | 1839 929 | ---- --- | 1839 929 | ---- --- |
| | | Upper Rear, Right | 1 | 1839 932 | 1839 932 | ---- --- | 1839 932 | ---- --- |
| | | Left | 1 | 1839 933 | 1839 933 | ---- --- | 1839 933 | ---- --- |
| | | Lower Center, Right | 1 | 1839 930 | 1839 930 | ---- --- | 1839 930 | ---- --- |
| | | Left | 1 | 1839 931 | 1839 931 | ---- --- | 1839 931 | ---- --- |
| | | Lower Rear, Right | 1 | 1839 934 | 1839 934 | ---- --- | 1839 934 | ---- --- |
| | | Left | 1 | 1839 935 | 1839 935 | ---- --- | 1839 935 | ---- --- |



MyMopar.com

## 23-22-0 GARNISH MOULDINGS - Cont'd

| CODE | REMARKS | | PER CAR | PLYMOUTH | DODGE | DESOTO | CHRYSLER | IMPERIAL |
|---|---|---|---|---|---|---|---|---|
| 23-22-53 | MOULDING, Quarter Window Garnish | | | | | | | |
| | Cl. Sed. | Prime, Right | 1 | 1963 722 | 1963 722 | ---- --- | ---- --- | ---- --- |
| | | Left | 1 | 1963 723 | 1963 723 | ---- --- | ---- --- | ---- --- |
| | Cv. Cp. | Chrome, Right | 1 | 1963 914 | 1964 914 | ---- --- | ---- --- | ---- --- |
| | | Left | 1 | 1963 915 | 1963 915 | ---- --- | ---- --- | ---- --- |
| | Sp. Cl. Cp., C3 | Chrome, Right | 1 | *1963 910 | 1963 910 | 2161 402 | 2161 402 | ---- --- |
| | | Left | 1 | *1963 911 | 1963 911 | 2161 403 | 2161 403 | ---- --- |
| | | End, Right | 1 | ---- --- | ---- --- | 2086 054 | 2080 314 | ---- --- |
| | | Left | 1 | ---- --- | ---- --- | 2086 055 | 2080 315 | ---- --- |
| | Sp. Cl. Cp., C1, C2 | Prime, Right | 1 | 1883 006 | 1883 006 | 1839 942 | 1839 942 | ---- --- |
| | | Left | 1 | 1883 007 | 1883 007 | 1839 943 | 1839 943 | ---- --- |
| | | End, Right | 1 | ---- --- | ---- --- | 1901 866 | 1901 866 | ---- --- |
| | | Left | 1 | ---- --- | ---- --- | 1901 867 | 1901 867 | ---- --- |
| | Cv. Cp., C1 | Prime, Right | 1 | 1883 014 | 1883 014 | ---- --- | 1883 022 | ---- --- |
| | | Left | 1 | 1883 015 | 1883 015 | ---- --- | 1883 023 | ---- --- |
| | Sp. 4 D., S1, C1, C2, w/Low Window, | Prime, Belt, Right | 1 | 1884 828 | 1884 828 | 1884 828 | 1884 828 | ---- --- |
| | | Left | 1 | 1884 829 | 1884 829 | 1884 829 | 1884 829 | ---- --- |
| | Sp. 4 D., D3, D4, w/High Window, | Prime, Belt, Right | 1 | 1952 972 | 1952 972 | 1952 976 | 1952 976 | ---- --- |
| | | Left | 1 | 1952 973 | 1952 973 | 1952 977 | 1952 977 | ---- --- |
| | Sp. 4 D., D3-H, D4-H, C3, w/High Window, | Chrome, Belt, Right | 1 | 1964 540 | 1964 540 | 1963 710 | 1963 710 | ---- --- |
| | | Left | 1 | 1964 541 | 1964 541 | 1963 711 | 1963 711 | ---- --- |
| | Sp. 4 D., D1, D2, w/High Window, | Prime, Belt, Right | 1 | ---- --- | 1952 976 | ---- --- | ---- --- | ---- --- |
| | | Left | 1 | ---- --- | 1952 977 | ---- --- | ---- --- | ---- --- |
| | Sp. 4 D., D2-H, w/High Window, Chrome, Belt, | Right | 1 | ---- --- | 1963 710 | ---- --- | ---- --- | ---- --- |
| | | Left | 1 | ---- --- | 1963 711 | ---- --- | ---- --- | ---- --- |
| | Sp. 4 D., S1, w/Low Window | Chrome, Belt, Right | 1 | ---- --- | ---- --- | 1963 708 | ---- --- | ---- --- |
| | | Left | 1 | ---- --- | ---- --- | 1963 709 | ---- --- | ---- --- |
| | 4 D. | Chrome, Belt, Right | 1 | ---- --- | ---- --- | ---- --- | ---- --- | 1902 002 |
| | | Left | 1 | ---- --- | ---- --- | ---- --- | ---- --- | 1902 003 |
| | | Rear, Right | 1 | ---- --- | ---- --- | ---- --- | ---- --- | 2080 858 |
| | | Left | 1 | ---- --- | ---- --- | ---- --- | ---- --- | 2080 859 |
| | Sp. 4 D. | Chrome, Belt, Right | 1 | ---- --- | ---- --- | ---- --- | ---- --- | 1901 994 |
| | | Left | 1 | ---- --- | ---- --- | ---- --- | ---- --- | 1901 995 |
| | | Rear, Right | 1 | ---- --- | ---- --- | ---- --- | ---- --- | 2080 858 |
| | | Left | 1 | ---- --- | ---- --- | ---- --- | ---- --- | 2080 859 |
| 23-22-55 | SUPPORT, Quarter Window Garnish Moulding | | | | | | | |
| | Cl. Sed. | Right | 1 | 1909 488 | 1909 488 | ---- --- | ---- --- | ---- --- |
| | | Left | 1 | 1909 489 | 1909 489 | ---- --- | ---- --- | ---- --- |
| | 2 D. Sub. | Right | 1 | 1909 490 | ---- --- | ---- --- | ---- --- | ---- --- |
| | | Left | 1 | 1909 491 | ---- --- | ---- --- | ---- --- | ---- --- |
| 23-22-77 | MOULDING, Tailgate Belt Garnish | | | | | | | |
| | Sub. | Prime | 1 | 1839 977 | 1839 977 | 1839 977 | 1839 977 | ---- --- |
| 23-22-78 | MOULDING, Tailgate Opening Garnish | | | | | | | |
| | Sub. | Upper | 1 | 1839 976 | 1839 976 | ---- --- | 1839 976 | ---- --- |
| 23-22-80 | SPACER, Tailgate Belt Garnish Moulding | | | | | | | |
| | Sub. | Outer | 2 | 2094 449 | 2094 449 | ---- --- | 2094 449 | ---- --- |
| 23-22-81 | SEAL, Tailgate Garnish Moulding End | | 2 | ⊟2161 818 | ⊟2161 818 | ---- --- | ⊟2161 818 | ---- --- |
| 23-22-85 | COVER, Rear Window Garnish Moulding Joint | | | | | | | |
| | Sp. Cl. Cp., High Window | Prime, Upper, Right | 1 | ---- --- | 1954 848 | ---- --- | ---- --- | ---- --- |
| | | Left | 1 | ---- --- | 1954 849 | ---- --- | ---- --- | ---- --- |
| | Sp. Cl. Cp., Low Window | Prime, Upper, Right | 1 | ---- --- | 1963 630 | ---- --- | ---- --- | ---- --- |
| | | Left | 1 | ---- --- | 1963 631 | ---- --- | ---- --- | ---- --- |
| | Sp. Cl. Cp., D4, High Window, | Chrome, Upper, Right | 1 | ---- --- | 1964 492 | ---- --- | ---- --- | ---- --- |
| | | Left | 1 | ---- --- | 1964 493 | ---- --- | ---- --- | ---- --- |
| | Sp. 4 D. | High Window, Chrome, Upper | 1 | ---- --- | 1963 670 | 1963 670 | 1963 670 | ---- --- |
| | Sp. Cl. Cp. | High Window, Chrome, Center | 1 | ---- --- | ---- --- | *2086 168 | *2086 168 | ---- --- |
| | All | Low Window, Chrome, Upper | 1 | ---- --- | ---- --- | ---- --- | ---- --- | 1901 990 |
| | | Lower | 1 | ---- --- | ---- --- | ---- --- | ---- --- | 1901 991 |

★ Indicates use as required.
⊟ Indicates parts not listed in any previous parts book.
* Indicates change or addition.



Printed in U.S.A.
Prices and specifications subject to change without notice.
Dec. 9, 1960 Supersedes April 20, 1960.
MyMopar.com

## 23-22-0 GARNISH MOULDINGS - Cont'd

| CODE | REMARKS | PER CAR | PLYMOUTH | DODGE | DESOTO | CHRYSLER | IMPERIAL |
|---|---|---|---|---|---|---|---|
| 23-22-86 | MOULDING, Rear Low Window Garnish | | | | | | |
| | 4 D., Sp. 4 D., Cl. Sed., D1, D2, S1 | | | | | | |
| | Prime, Upper | 1 | ---- --- | 1882 955 | 1882 955 | 1882 955 | ---- --- |
| | Sp. 4 D., D1, D2, S1, C1, C2 | | | | | | |
| | Prime, Side, Right | 1 | ---- --- | 1883 002 | 1883 002 | 1883 002 | ---- --- |
| | Left | 1 | ---- --- | 1883 003 | 1883 003 | 1883 003 | ---- --- |
| | 4 D., Cl. Sed., S1 Prime, Side, Right | 1 | ---- --- | 2165 460 | 1883 002 | 1883 002 | ---- --- |
| | Left | 1 | ---- --- | 2165 461 | 1883 003 | 1883 003 | ---- --- |
| | 4 D., S1, C3 Chrome, Upper | 1 | ---- --- | ---- --- | *1964 154 | *1964 154 | ---- --- |
| | Side, Right | 1 | ---- --- | ---- --- | *1964 152 | 1964 152 | ---- --- |
| | Left | 1 | ---- --- | ---- --- | *1964 153 | 1964 153 | ---- --- |
| | Sp. Cl. Cp. Prime, Side, Right | 1 | ---- --- | 1882 998 | ---- --- | ---- --- | ---- --- |
| | Left | 1 | ---- --- | 1882 999 | ---- --- | ---- --- | ---- --- |
| | MOULDING, Rear High Window Garnish | | | | | | |
| | Sp. 4 D., D1, D2, S3 | | | | | | |
| | Prime, Upper and Side, Right | 1 | ---- --- | 1952 654 | ---- --- | 1952 654 | ---- --- |
| | Left | 1 | ---- --- | 1952 655 | ---- --- | 1952 655 | ---- --- |
| | 4 D., Sp. 4 D. Prime, Upper and Side, Right | 1 | ---- --- | ---- --- | *1952 654 | ---- --- | ---- --- |
| | Left | 1 | ---- --- | ---- --- | 1952 655 | ---- --- | ---- --- |
| | 4 D., Sp. 4 D., Chrome, Upper and Side, Right | 1 | ---- --- | *1963 668 | *1963 668 | ---- --- | ---- --- |
| | Left | 1 | ---- --- | *1963 669 | 1963 669 | ---- --- | ---- --- |
| | Sp. 4 D., C3 Chrome, Upper and Side, Right | 1 | ---- --- | ---- --- | ---- --- | *1963 668 | ---- --- |
| | Left | 1 | ---- --- | ---- --- | ---- --- | 1963 669 | ---- --- |
| | Sp. Cl. Cp. Prime, Upper | 1 | ---- --- | 1952 693 | ---- --- | ---- --- | ---- --- |
| | Side, Right | 1 | ---- --- | 1952 696 | ---- --- | ---- --- | ---- --- |
| | Left | 1 | ---- --- | 1952 697 | ---- --- | ---- --- | ---- --- |
| | Sp. Cl. Cp., D2-H Chrome, Upper | 1 | ---- --- | 1964 416 | ---- --- | ---- --- | ---- --- |
| | Side, Right | 1 | ---- --- | 1964 414 | ---- --- | ---- --- | ---- --- |
| | Left | 1 | ---- --- | 1964 415 | ---- --- | ---- --- | ---- --- |
| | Sp. Cl. Cp., C3 Chrome, Upper, Right | 1 | ---- --- | ---- --- | 2086 056 | 2086 056 | ---- --- |
| | Left | 1 | ---- --- | ---- --- | 2086 057 | 2086 057 | ---- --- |
| | Sp. Cl. Cp. Prime, Upper, Right | 1 | ---- --- | ---- --- | 1839 940 | 1839 940 | ---- --- |
| | Left | 1 | ---- --- | ---- --- | 1839 941 | 1839 941 | ---- --- |
| | MOULDING, Rear Window Garnish | | | | | | |
| | 4 D., Sp. 4 D. Chrome, Upper, Right | 1 | ---- --- | ---- --- | ---- --- | ---- --- | 1901 971 |
| | Left | 1 | ---- --- | ---- --- | ---- --- | ---- --- | 1901 972 |
| | Lower, Right | 1 | ---- --- | ---- --- | ---- --- | ---- --- | 1901 969 |
| | Left | 1 | ---- --- | ---- --- | ---- --- | ---- --- | 1901 970 |
| | Lower Corner, Right | 1 | ---- --- | ---- --- | ---- --- | ---- --- | 1901 992 |
| | Left | 1 | ---- --- | ---- --- | ---- --- | ---- --- | 1901 993 |
| | Sp. Cl. Cp. Chrome, Upper, Right | 1 | ---- --- | ---- --- | ---- --- | ---- --- | ⊟1901 988 |
| | Left | 1 | ---- --- | ---- --- | ---- --- | ---- --- | ⊟1901 989 |
| | Lower, Right | 1 | ---- --- | ---- --- | ---- --- | ---- --- | 1901 986 |
| | Left | 1 | ---- --- | ---- --- | ---- --- | ---- --- | 1901 987 |
| | Lower Corner, Right | 1 | ---- --- | ---- --- | ---- --- | ---- --- | 1902 000 |
| | Left | 1 | ---- --- | ---- --- | ---- --- | ---- --- | 1902 001 |
| 23-22-145 | MOULDING, Windshield Garnish | | | | | | |
| | Except Cv. Cp. Prime, Upper | 1 | 1882 913 | 1882 913 | 1882 913 | 1882 913 | ---- --- |
| | Side, Right | 1 | 1882 918 | 1882 918 | 1882 918 | 1882 918 | ---- --- |
| | Left | 1 | 1882 919 | 1882 919 | 1882 919 | 1882 919 | ---- --- |
| | Lower, Right | 1 | *1839 546 | *1839 546 | *1839 546 | *1839 558 | ---- --- |
| | Left | 1 | *1839 547 | *1839 547 | *1839 547 | *1839 559 | ---- --- |
| | Cv. Cp. Chrome, Upper | 1 | 1954 048 | 1954 048 | ---- --- | 1954 048 | 2093 619 |
| | Side, Right | 1 | 1963 346 | 1963 346 | ---- --- | 1963 346 | 1901 998 |
| | Left | 1 | 1963 347 | 1963 347 | ---- --- | 1963 347 | 1901 999 |
| | Cv. Cp. Prime, Upper | 1 | 1882 915 | 1882 915 | ---- --- | 1882 915 | ---- --- |
| | Lower, Right | 1 | *1839 546 | *1839 546 | ---- --- | 1839 558 | ---- --- |
| | Left | 1 | *1839 547 | *1839 547 | ---- --- | 1839 559 | ---- --- |
| | Sp. 4 D., Sp. Cl. Cp., P1-H, P2-H | | | | | | |
| | Chrome, Upper | 1 | 1963 957 | ---- --- | ---- --- | ---- --- | ---- --- |
| | Side, Right | 1 | 1963 958 | ---- --- | ---- --- | ---- --- | ---- --- |
| | Left | 1 | 1963 959 | ---- --- | ---- --- | ---- --- | ---- --- |



MyMopar.com

| CODE | REMARKS | | PER CAR | PLYMOUTH | DODGE | DESOTO | CHRYSLER | IMPERIAL |
|---|---|---|---|---|---|---|---|---|
| **23-22-0** | **GARNISH MOULDINGS - Cont'd** | | | | | | | |
| 23-22-145 | MOULDING - Cont'd | | | | | | | |
| | C3, except Cv. Cp. | Chrome, Upper | 1 | ---- --- | ---- --- | 1963 957 | 1963 957 | ---- --- |
| | | Side, Right | 1 | ---- --- | ---- --- | 1963 958 | 1963 958 | ---- --- |
| | | Left | 1 | ---- --- | ---- --- | 1963 959 | 1963 959 | ---- --- |
| | Except Cv. Cp. | Chrome, Upper, Right | 1 | ---- --- | ---- --- | ---- --- | ---- --- | 2080 782 |
| | | Left | 1 | ---- --- | ---- --- | ---- --- | ---- --- | 2080 783 |
| | | Side, Right | 1 | ---- --- | ---- --- | ---- --- | ---- --- | 1901 996 |
| | | Left | 1 | ---- --- | ---- --- | ---- --- | ---- --- | 1901 997 |
| | All | Plate, Inner, Right | 1 | ---- --- | ---- --- | ---- --- | ---- --- | 2080 306 |
| | | Left | 1 | ---- --- | ---- --- | ---- --- | ---- --- | 2080 307 |
| | | Outer, Right | 1 | ---- --- | ---- --- | ---- --- | ---- --- | 1902 274 |
| | | Left | 1 | ---- --- | ---- --- | ---- --- | ---- --- | 1902 275 |
| | All | Prime, Lower, Right | 1 | ---- --- | ---- --- | ---- --- | ---- --- | 1839 566 |
| | | Left | 1 | ---- --- | ---- --- | ---- --- | ---- --- | 1839 567 |
| | Sp. 4 D., Sp. Cl. Cp., | Chrome, Upper Corner, Right | 1 | ---- --- | ---- --- | ---- --- | ---- --- | 1901 974 |
| | | Left | 1 | ---- --- | ---- --- | ---- --- | ---- --- | 1901 975 |
| 23-22-148 | COVER, Windshield Garnish Moulding Center Joint | | | | | | | |
| | | Prime, Upper | 1 | ---- --- | ---- --- | ---- --- | ---- --- | 2080 125 |
| | | Chrome, Lower | 1 | ---- --- | ---- --- | ---- --- | ---- --- | 2080 284 |
| 23-22-151 | SUPPORT, Windshield Garnish Moulding | | | | | | | |
| | | Side Upper | 2 | 1963 956 | 1963 956 | 1963 956 | 1963 956 | ---- --- |
| | | Upper | 1 | 1964 348 | 1964 348 | 1964 348 | 1964 348 | ---- --- |
| 23-22-152 | SPACER, Windshield Upper Garnish Moulding except Cv. Cp. | | 6 | ---- --- | ---- --- | ---- --- | ---- --- | *1901 973 |
| 23-22-160 | ORNAMENT, Windshield Lower Garnish Moulding | | 6 | ---- --- | ---- --- | ---- --- | ---- --- | 2080 285 |
| | NUT | | ★ | ---- --- | ---- --- | ---- --- | ---- --- | 6008 032 |
| **23-23-0** | **OUTSIDE FINISH MOULDINGS** | | | | | | | |
| 23-23-2 | MOULDING PACKAGE, Body Side Sill Outside Finish | | | | | | | |
| | P1-H, P2-H, except 4 D. Sub. | Right | 1 | *2084 737 | ---- --- | ---- --- | ---- --- | ---- --- |
| | CLIP | | 6 | *6000 732 | ---- --- | ---- --- | ---- --- | ---- --- |
| | SCREW | | 1 | * 161 895 | ---- --- | ---- --- | ---- --- | ---- --- |
| | | Left | 1 | ⊟2196 874 | ---- --- | ---- --- | ---- --- | ---- --- |
| | CLIP | | 6 | *6000 732 | ---- --- | ---- --- | ---- --- | ---- --- |
| | SCREW | | 1 | * 161 895 | ---- --- | ---- --- | ---- --- | ---- --- |
| | 4 D. Sub., P1-H, P2-H | Right | 1 | 2196 186 | ---- --- | ---- --- | ---- --- | ---- --- |
| | CLIP | | 5 | 6000 732 | ---- --- | ---- --- | ---- --- | ---- --- |
| | | Left | 1 | 2196 187 | ---- --- | ---- --- | ---- --- | ---- --- |
| | CLIP | | 5 | 6000 732 | ---- --- | ---- --- | ---- --- | ---- --- |
| | All | Right | 1 | ---- --- | ---- --- | 2196 524 | ---- --- | ---- --- |
| | CLIP | | 4 | ---- --- | ---- --- | 6000 732 | ---- --- | ---- --- |
| | | Left | 1 | ---- --- | ---- --- | 2196 525 | ---- --- | ---- --- |
| | CLIP | | 4 | ---- --- | ---- --- | 6000 732 | ---- --- | ---- --- |
| | C1 | Right | 1 | ---- --- | ---- --- | ---- --- | 2196 730 | ---- --- |
| | CLIP | | 7 | ---- --- | ---- --- | ---- --- | 6000 732 | ---- --- |
| | CLIP and BOLT | | 1 | ---- --- | ---- --- | ---- --- | 6010 046 | ---- --- |
| | NUT | | 1 | ---- --- | ---- --- | ---- --- | 151 497 | ---- --- |
| | | Left | 1 | ---- --- | ---- --- | ---- --- | 2196 731 | ---- --- |
| | CLIP | | 7 | ---- --- | ---- --- | ---- --- | 6000 732 | ---- --- |
| | CLIP and BOLT | | 1 | ---- --- | ---- --- | ---- --- | 6010 046 | ---- --- |
| | NUT | | 1 | ---- --- | ---- --- | ---- --- | 151 497 | ---- --- |
| | C2 | Right | 1 | ---- --- | ---- --- | ---- --- | 2196 732 | ---- --- |
| | CLIP | | 7 | ---- --- | ---- --- | ---- --- | 6000 732 | ---- --- |
| | CLIP and BOLT | | 1 | ---- --- | ---- --- | ---- --- | 6010 046 | ---- --- |
| | NUT | | 1 | ---- --- | ---- --- | ---- --- | 151 497 | ---- --- |
| | | Left | 1 | ---- --- | ---- --- | ---- --- | 2196 733 | ---- --- |
| | CLIP | | 7 | ---- --- | ---- --- | ---- --- | 6000 732 | ---- --- |
| | CLIP and BOLT | | 1 | ---- --- | ---- --- | ---- --- | 6010 046 | ---- --- |
| | NUT | | 1 | ---- --- | ---- --- | ---- --- | 151 497 | ---- --- |



MyMopar.com

## 23-23-0 OUTSIDE FINISH MOULDING-Cont'd

| CODE | REMARKS | | PER CAR | PLYMOUTH | DODGE | DESOTO | CHRYSLER | IMPERIAL |
|---|---|---|---|---|---|---|---|---|
| 23-23-2 | MOULDING PACKAGE - Cont'd | | | | | | | |
| | C3 | Right | 1 | ---- --- | ---- --- | ---- --- | 2196 734 | ---- --- |
| | CLIP | | 6 | ---- --- | ---- --- | ---- --- | 6000 732 | ---- --- |
| | CLIP and BOLT | | 1 | ---- --- | ---- --- | ---- --- | 6010 046 | ---- --- |
| | NUT | | 1 | ---- --- | ---- --- | ---- --- | 151 497 | ---- --- |
| | | Left | 1 | ---- --- | ---- --- | ---- --- | 2196 735 | ---- --- |
| | CLIP | | 6 | ---- --- | ---- --- | ---- --- | 6000 732 | ---- --- |
| | CLIP and BOLT | | 1 | ---- --- | ---- --- | ---- --- | 6010 046 | ---- --- |
| | NUT | | 1 | ---- --- | ---- --- | ---- --- | 151 497 | ---- --- |
| | All | Right | 1 | ---- --- | ---- --- | ---- --- | ---- --- | 2196 680 |
| | CLIP | | 8 | ---- --- | ---- --- | ---- --- | ---- --- | 6006 449 |
| | | Left | 1 | ---- --- | ---- --- | ---- --- | ---- --- | 2196 681 |
| | CLIP | | 8 | ---- --- | ---- --- | ---- --- | ---- --- | 6006 449 |
| 23-23-14 | MOULDING, Front Pillar Face | | | | | | | |
| | Cv. Cp. | Right | 1 | ---- --- | ---- --- | ---- --- | ---- --- | ⊟2093 136 |
| | | Left | 1 | ---- --- | ---- --- | ---- --- | ---- --- | ⊟2093 137 |
| 23-23-22 | SUPPORT, Rear Window Lower Moulding Clip | | ★ | ---- --- | 1954 662 | 1954 662 | 1954 662 | ---- --- |
| 23-23-23 | MOULDING PACKAGE, Deck Opening Lower Panel | License Well | 1 | ---- --- | ---- --- | 2196 514 | 2196 664 | ---- --- |
| | NUT and SEAL | | 6 | ---- --- | ---- --- | 6006 264 | 6006 264 | ---- --- |
| | C1, C2, C3-300 | Right | 1 | ---- --- | ---- --- | ---- --- | 2196 655 | ---- --- |
| | CLIP | | 3 | ---- --- | ---- --- | ---- --- | 6006 443 | ---- --- |
| | | Left | 1 | ---- --- | ---- --- | ---- --- | 2196 656 | ---- --- |
| | CLIP | | 3 | ---- --- | ---- --- | ---- --- | 6006 443 | ---- --- |
| | C3 | Right | 1 | ---- --- | ---- --- | ---- --- | 2196 657 | ---- --- |
| | CLIP | | 3 | ---- --- | ---- --- | ---- --- | 6006 443 | ---- --- |
| | | Left | 1 | ---- --- | ---- --- | ---- --- | 2196 658 | ---- --- |
| | CLIP | | 3 | ---- --- | ---- --- | ---- --- | 6006 443 | ---- --- |
| | | Right | 1 | ---- --- | ---- --- | ---- --- | ---- --- | 2196 828 |
| | CLIP and BOLT | | 5 | ---- --- | ---- --- | ---- --- | ---- --- | 6000 709 |
| | | Left | 1 | ---- --- | ---- --- | ---- --- | ---- --- | 2196 829 |
| | CLIP and BOLT | | 5 | ---- --- | ---- --- | ---- --- | ---- --- | 6000 709 |
| | | Filler Door | 1 | ---- --- | ---- --- | ---- --- | ---- --- | 2196 549 |
| | SCREW | | 2 | ---- --- | ---- --- | ---- --- | ---- --- | 159 229 |
| 23-23-24 | MOULDING PACKAGE, Deck Lid License Insert Panel | | | | | | | |
| | | Chrome | 1 | ---- --- | 2196 106 | ---- --- | ---- --- | ---- --- |
| | NUT and SEAL | | 6 | ---- --- | 6000 616 | ---- --- | ---- --- | ---- --- |
| 23-23-25 | REFLECTOR, Quarter Panel | | 2 | ---- --- | ---- --- | ---- --- | ---- --- | 1960 060 |
| 23-23-26 | SEAL, Quarter Panel Reflector | | 2 | ---- --- | ---- --- | ---- --- | ---- --- | 1960 499 |
| 23-23-30 | MOULDING PACKAGE, Deck Lid | | 1 | ---- --- | 2196 262 | ---- --- | ---- --- | ---- --- |
| | CLIP and BOLT | | 7 | ---- --- | 6000 709 | ---- --- | ---- --- | ---- --- |
| | NUT | | 7 | ---- --- | 441 256 | ---- --- | ---- --- | ---- --- |
| | C3 | Center | 1 | ---- --- | ---- --- | ---- --- | 2196 838 | ---- --- |
| | NUT | | 6 | ---- --- | ---- --- | ---- --- | 6006 215 | ---- --- |
| | All | | 1 | ---- --- | ---- --- | ---- --- | ---- --- | 2196 548 |
| | RETAINER | | 4 | ---- --- | ---- --- | ---- --- | ---- --- | 6006 467 |
| | SCREW | | 4 | ---- --- | ---- --- | ---- --- | ---- --- | 161 788 |
| 23-23-32 | MOULDING, Front Door Outside Window Opening Frame | | | | | | | |
| | NOTE: See illustration in front of group for Mouldings not listed. | | | | | | | |
| | 4 D. | Front, Right | 1 | 1884 976 | 1884 976 | 1954 914 | 1954 914 | ---- --- |
| | | Left | 1 | 1884 977 | 1884 977 | 1954 915 | 1954 915 | ---- --- |
| | | Upper, Right | 1 | 1884 978 | 1884 978 | 1884 978 | 1884 978 | ---- --- |
| | | Left | 1 | 1884 979 | 1884 979 | 1884 979 | 1884 979 | ---- --- |
| | | Rear, Right | 1 | 1884 980 | 1884 980 | 1884 980 | 1884 980 | ---- --- |
| | | Left | 1 | 1884 981 | 1884 981 | 1884 981 | 1884 981 | ---- --- |
| | MOULDING PACKAGE, Front Door Outside Finish | | | | | | | |
| | 4 D. | Belt, Front, Right | 1 | ---- --- | ---- --- | ---- --- | ---- --- | 2196 686 |
| | SCREW | | 1 | ---- --- | ---- --- | ---- --- | ---- --- | 274 831 |
| | SCREW | | 1 | ---- --- | ---- --- | ---- --- | ---- --- | ---- --- |
| | | Left | 1 | ---- --- | ---- --- | ---- --- | ---- --- | 2196 687 |
| | SCREW | | 1 | ---- --- | ---- --- | ---- --- | ---- --- | 274 831 |


MyMopar.com

| CODE | REMARKS | PER CAR | PLYMOUTH | DODGE | DESOTO | CHRYSLER | IMPERIAL |
|---|---|---|---|---|---|---|---|
| **23-23-0** | **OUTSIDE FINISH MOULDING - Cont'd** | | | | | | |
| 23-23-32 | MOULDING PACKAGE - Cont'd | | | | | | |
| | Rear, Right | 1 | ---- --- | ---- --- | ---- --- | ---- --- | 2196 718 |
| | RETAINER | 4 | ---- --- | ---- --- | ---- --- | ---- --- | 6006 469 |
| | Left | 1 | ---- --- | ---- --- | ---- --- | ---- --- | 2196 719 |
| | RETAINER | 4 | ---- --- | ---- --- | ---- --- | ---- --- | 6006 469 |
| 23-23-33 | MOULDING, Rear Door Outside Window Opening Frame | | | | | | |
| | NOTE: See illustration in front of group for Mouldings not listed. | | | | | | |
| | 4 D. Front, Right | 1 | 1884 982 | 1884 982 | 1884 982 | 1884 982 | ---- --- |
| | Left | 1 | 1884 983 | 1884 983 | 1884 983 | 1884 983 | ---- --- |
| | 4 D., D3, D4 Upper, Right | 1 | 1909 844 | 1909 844 | 1884 984 | 1884 984 | ---- --- |
| | Left | 1 | 1909 845 | 1909 845 | 1884 985 | 1884 985 | ---- --- |
| | 4 D., D1, D2 Upper, Right | 1 | ---- --- | 1884 984 | ---- --- | ---- --- | ---- --- |
| | Left | 1 | ---- --- | 1884 985 | ---- --- | ---- --- | ---- --- |
| | 4 D., D3, D4 Upper Extension, Right | 1 | 1952 466 | 1952 466 | 1954 916 | 1954 916 | ---- --- |
| | Left | 1 | 1952 467 | 1952 467 | 1954 917 | 1954 917 | ---- --- |
| | 4 D., D1, D2 Upper Extension Right | 1 | ---- --- | 1952 856 | ---- --- | ---- --- | ---- --- |
| | Left | 1 | ---- --- | 1952 857 | ---- --- | ---- --- | ---- --- |
| | MOULDING PACKAGE, Rear Door Outside Finish | | | | | | |
| | 4 D. Belt, Front, Right | 1 | ---- --- | ---- --- | ---- --- | ---- --- | 2196 720 |
| | RETAINER | 4 | ---- --- | ---- --- | ---- --- | ---- --- | 6006 469 |
| | Left | 1 | ---- --- | ---- --- | ---- --- | ---- --- | 2196 721 |
| | RETAINER | 4 | ---- --- | ---- --- | ---- --- | ---- --- | 6006 469 |
| | Rear, Right | 1 | ---- --- | ---- --- | ---- --- | ---- --- | 2196 722 |
| | RETAINER | 2 | ---- --- | ---- --- | ---- --- | ---- --- | 6006 469 |
| | Left | 1 | ---- --- | ---- --- | ---- --- | ---- --- | 2196 723 |
| | RETAINER | 2 | ---- --- | ---- --- | ---- --- | ---- --- | 6006 469 |
| 23-23-36 | MOULDING, Front Door Vent Wing Division Channel | | | | | | |
| | Inner | 2 | ---- --- | ---- --- | ---- --- | ---- --- | 1751 325 |
| | Outer | 2 | ---- --- | ---- --- | ---- --- | ---- --- | 1751 323 |
| 23-23-39 | MOULDING PACKAGE, Quarter Panel Outside Finish | | | | | | |
| | NOTE: See illustration in front of group for Mouldings not listed. | | | | | | |
| | P1-H, P2-H Wheel Opening, Right | 1 | *2196 180 | ---- --- | ---- --- | ---- --- | ---- --- |
| | SCREW | 7 | 125 978 | ---- --- | ---- --- | ---- --- | ---- --- |
| | Left | 1 | 2196 181 | ---- --- | ---- --- | ---- --- | ---- --- |
| | SCREW | 7 | 125 978 | ---- --- | ---- --- | ---- --- | ---- --- |
| | P2-H, except Sub. Front, Right | 1 | *2084 738 | ---- --- | ---- --- | ---- --- | ---- --- |
| | RETAINER and BOLT | 3 | 6000 701 | ---- --- | ---- --- | ---- --- | ---- --- |
| | RETAINER and BOLT | 1 | 1954 886 | ---- --- | ---- --- | ---- --- | ---- --- |
| | NUT and SEAL | 4 | ---- --- | ---- --- | ---- --- | ---- --- | ---- --- |
| | Left | 1 | 2084 739 | ---- --- | ---- --- | ---- --- | ---- --- |
| | RETAINER and BOLT | 3 | 6000 701 | ---- --- | ---- --- | ---- --- | ---- --- |
| | RETAINER and BOLT | 1 | 1954 887 | ---- --- | ---- --- | ---- --- | ---- --- |
| | NUT and SEAL | 4 | ---- --- | ---- --- | ---- --- | ---- --- | ---- --- |
| | Rear, Right | 1 | 2084 740 | ---- --- | ---- --- | ---- --- | ---- --- |
| | RETAINER and BOLT | 4 | 6000 700 | ---- --- | ---- --- | ---- --- | ---- --- |
| | RETAINER and BOLT | 1 | 6000 702 | ---- --- | ---- --- | ---- --- | ---- --- |
| | NUT and SEAL | 5 | 6000 028 | ---- --- | ---- --- | ---- --- | ---- --- |
| | Rear, Left | 1 | 2084 741 | ---- --- | ---- --- | ---- --- | ---- --- |
| | RETAINER and BOLT | 4 | 6000 700 | ---- --- | ---- --- | ---- --- | ---- --- |
| | RETAINER and BOLT | 1 | 6000 702 | ---- --- | ---- --- | ---- --- | ---- --- |
| | NUT and SEAL | 5 | 6000 028 | ---- --- | ---- --- | ---- --- | ---- --- |
| | 4 D., Sp. 4 D., Cl.Sed., D3, D4, w/Low Window Belt, Right | 1 | 2084 772 | 2084 772 | ---- --- | ---- --- | ---- --- |
| | CLIP and SEAL | 1 | 6000 862 | 6000 862 | ---- --- | ---- --- | ---- --- |
| | Left | 1 | 2084 773 | 2084 773 | ---- --- | ---- --- | ---- --- |
| | CLIP and SEAL | 1 | 6000 862 | 6000 862 | ---- --- | ---- --- | ---- --- |



MyMopar.com

## 23-23-0 OUTSIDE FINISH MOULDING - Cont'd

| CODE | REMARKS | PER CAR | PLYMOUTH | DODGE | DESOTO | CHRYSLER | IMPERIAL |
|---|---|---|---|---|---|---|---|
| 23-23-39 | MOULDING PACKAGE - Cont'd | | | | | | |
| | All Wheel Opening, Right | 1 | ---- --- | ---- --- | 2196 526 | 2196 526 | ---- --- |
| | SCREW | 7 | ---- --- | ---- --- | 125 978 | 125 978 | ---- --- |
| | Left | 1 | ---- --- | ---- --- | 2196 527 | 2196 527 | ---- --- |
| | SCREW | 7 | ---- --- | ---- --- | 125 978 | 125 978 | ---- --- |
| | Sub. Belt, Right | 1 | 2196 814 | 2196 814 | ---- --- | 2196 814 | ---- --- |
| | CLIP and SEAL | 1 | 6000 721 | 6000 721 | ---- --- | 6000 721 | ---- --- |
| | Left | 1 | 2196 815 | 2196 815 | ---- --- | 2196 815 | ---- --- |
| | CLIP and SEAL | 1 | 6000 721 | 6000 721 | ---- --- | 6000 721 | ---- --- |
| | Y1-L Wheel Opening, Right | 1 | ---- --- | ---- --- | ---- --- | ---- --- | 2196 820 |
| | SCREW | 5 | ---- --- | ---- --- | ---- --- | ---- --- | 9414 080 |
| | Left | 1 | ---- --- | ---- --- | ---- --- | ---- --- | 2196 821 |
| | SCREW | 5 | ---- --- | ---- --- | ---- --- | ---- --- | 9414 080 |
| | All Lower Rear, Right | 1 | ---- --- | ---- --- | ---- --- | ---- --- | 2196 830 |
| | CLIP and BOLT | 3 | ---- --- | ---- --- | ---- --- | ---- --- | 6000 709 |
| | SCREW | 1 | ---- --- | ---- --- | ---- --- | ---- --- | 9414 080 |
| | Left | 1 | ---- --- | ---- --- | ---- --- | ---- --- | 2196 831 |
| | CLIP and BOLT | 3 | ---- --- | ---- --- | ---- --- | ---- --- | 6000 709 |
| | SCREW | 1 | ---- --- | ---- --- | ---- --- | ---- --- | 9414 080 |
| 23-23-41 | CAP or COVER, Body Outside Finish Moulding Joint | | | | | | |
| | 4 D., Cl. Sed., D3, D4, Rear Window Side and Lower | 2 | 1954 784 | 1954 784 | ---- --- | ---- --- | ---- --- |
| | Sp. 4 D., P1-H, P2-H, D3-H, D4-H, w/High Window, Side and Lower Rear Window, Right | 1 | ⊟2166 340 | ⊟2166 340 | ---- --- | ---- --- | ---- --- |
| | Left | 1 | ⊟2166 341 | ⊟2166 341 | ---- --- | ---- --- | ---- --- |
| | Cv. Cp., Folding Top Belt Bar Finish Moulding | 1 | 1963 336 | 1963 336 | ---- --- | 1963 336 | ---- --- |
| | Sp. Cl. Cp., P1-M, P2-M, D3-M, D4-M, Rear Window Side and Upper Right | 1 | 1954 732 | 1909 604 | ---- --- | ---- --- | ---- --- |
| | Left | 1 | 1954 733 | 1909 605 | ---- --- | ---- --- | ---- --- |
| | Sp. Cl. Cp., w/High Window Side and Upper Right | 1 | 1954 730 | ---- --- | ---- --- | ---- --- | ---- --- |
| | Left | 1 | 1954 731 | ---- --- | ---- --- | ---- --- | ---- --- |
| | Sp. Cl. Cp., w/High Window, Side and Upper Right | 1 | ---- --- | 1954 734 | ---- --- | ---- --- | ---- --- |
| | Left | 1 | ---- --- | 1954 735 | ---- --- | ---- --- | ---- --- |
| | Sp. Cl. Cp., Rear Window Side and Lower Right | 1 | 1909 616 | ---- --- | ---- --- | ---- --- | ---- --- |
| | Left | 1 | 1909 617 | ---- --- | ---- --- | ---- --- | ---- --- |
| | Sub., Quarter Window, Lower Front | 2 | 1961 210 | 1961 210 | ---- --- | 1961 210 | ---- --- |
| | Sp. Cl. Cp., D1, D2, Rear Window Side and Lower, PKG. Right | 1 | ---- --- | 2196 290 | ---- --- | ---- --- | ---- --- |
| | Left | 1 | ---- --- | 2196 291 | ---- --- | ---- --- | ---- --- |
| | SCREW | 2 | ---- --- | 431 601 | ---- --- | ---- --- | ---- --- |
| | Sp. Cl. Cp., D3, D4, Rear Window Side and Lower Right | 1 | ---- --- | 1964 158 | ---- --- | ---- --- | ---- --- |
| | Left | 1 | ---- --- | 1964 159 | ---- --- | ---- --- | ---- --- |
| | 4 D., Cl. Sed., Sp. 4 D., Sp. Cl. Cp., Rear Window Upper and Lower 1 1/2" x 1 1/4" Length | 2 | 1954 850 | 1954 850 | 1954 850 | 1954 850 | ---- --- |
| | 4 D., Sp. 4 D., Cl. Sed., Sp. Cl. Cp., Rear Window Upper and Lower, Center PKG. 1 5/8" x 1 19/64" lgh. | 1 | 2093 479 | 2093 479 | 2093 479 | 2093 479 | ---- --- |
| | Cv. Cp., Belt Moulding to Quarter Panel, PKG. Right | 1 | ---- --- | ---- --- | ---- --- | ---- --- | 2196 682 |
| | Left | 1 | ---- --- | ---- --- | ---- --- | ---- --- | 2196 683 |
| | NUT | 2 | ---- --- | ---- --- | ---- --- | ---- --- | 120 622 |
| | Sp. Cl. Cp., Sp. 4 D., Rear Window, Lower | 1 | ---- --- | ---- --- | ---- --- | ---- --- | 2188 375 |
| 23-23-42 | MOULDING, Roof Panel Outside Finish | | | | | | |
| | Sp. Cl. Cp., P1-H, P2-H, Extension, PKG. Right | 1 | 2196 102 | ---- --- | ---- --- | ---- --- | ---- --- |
| | Left | 1 | 2196 103 | ---- --- | ---- --- | ---- --- | ---- --- |
| | SCREW | 2 | 161 589 | ---- --- | ---- --- | ---- --- | ---- --- |
| | Sp. 4 D., P1-H, P2-H, D3-H, D4-H, Side, PKG. Right | 1 | *2196 104 | *2196 104 | ---- --- | ---- --- | ---- --- |
| | Left | 1 | *2196 105 | *2196 105 | ---- --- | ---- --- | ---- --- |

★ Indicates use as required.
⊟ Indicates parts not listed in any previous parts book.
Dec. 9, 1960 Supersedes April 20, 1960.



Printed in U.S.A.
Prices and specifications subject to change without notice.
* Indicates change or addition.

MyMopar.com

## 23-23-0 OUTSIDE FINISH MOULDING - Cont'd

| CODE | REMARKS | PER CAR | PLYMOUTH | DODGE | DESOTO | CHRYSLER | IMPERIAL |
|---|---|---|---|---|---|---|---|
| 23-23-42 | MOULDING - Cont'd | | | | | | |
| | SCREW | 12 | 161 589 | * 161 589 | ---- --- | ---- --- | ---- --- |
| | Sp. Cl. Cp., P2-H, Side, PKG. Right | 1 | *2196 100 | ---- --- | ---- --- | ---- --- | ---- --- |
| | Left | 1 | *2196 101 | ---- --- | ---- --- | ---- --- | ---- --- |
| | SCREW | 14 | 161 589 | 161 589 | ---- --- | ---- --- | ---- --- |
| | Sp. Cl. Cp., D1-L, D3-M, D4-M, w/Low Window, Side, Cantilever Sweep, PKG. Right | 1 | ---- --- | 2196 266 | ---- --- | ---- --- | ---- --- |
| | Left | 1 | ---- --- | 2196 267 | ---- --- | ---- --- | ---- --- |
| | CLIP | 20 | ---- --- | 6000 706 | ---- --- | ---- --- | ---- --- |
| | Sp. Cl. Cp., w/High Window, Side, Cantilever Sweep, PKG. Right | 1 | ---- --- | 2196 264 | ---- --- | ---- --- | ---- --- |
| | Left | 1 | ---- --- | 2196 265 | ---- --- | ---- --- | ---- --- |
| | CLIP | 20 | ---- --- | 6000 706 | ---- --- | ---- --- | ---- --- |
| | Sp. Cl. Cp., C3, Side, Front, PKG. Right | 1 | ---- --- | ---- --- | 2196 665 | 2196 665 | ---- --- |
| | Left | 1 | ---- --- | ---- --- | 2196 666 | 2196 666 | ---- --- |
| | CLIP and SEAL | 8 | ---- --- | ---- --- | 6006 444 | 6006 444 | ---- --- |
| | Rear, PKG. Right | 1 | ---- --- | ---- --- | 2196 667 | 2196 667 | ---- --- |
| | Left | 1 | ---- --- | ---- --- | 2196 668 | 2196 668 | ---- --- |
| | CLIP | 2 | ---- --- | ---- --- | 6006 490 | 6006 490 | ---- --- |
| | CLIP | 4 | ---- --- | ---- --- | 6006 491 | 6006 491 | ---- --- |
| | SCREW | 2 | ---- --- | ---- --- | 162 826 | 162 826 | ---- --- |
| | Sub., Rear Front, PKG. | 2 | 2196 252 | 2196 252 | ---- --- | 2196 252 | ---- --- |
| | CLIP | 20 | 6006 301 | 6006 301 | ---- --- | 6006 301 | ---- --- |
| | Sub., Top, PKG. | 2 | 2196 253 | 2196 253 | ---- --- | 2196 253 | ---- --- |
| | CLIP | 28 | 6006 301 | 6006 301 | ---- --- | 6006 301 | ---- --- |
| | 4 D., Side, PKG. Right | 1 | ---- --- | ---- --- | ---- --- | ---- --- | 2196 800 |
| | Left | 1 | ---- --- | ---- --- | ---- --- | ---- --- | 2196 801 |
| | 4 D., Sp. 4 D., Upper, PKG. Right | 1 | ---- --- | ---- --- | ---- --- | ---- --- | 2196 692 |
| | Left | 1 | ---- --- | ---- --- | ---- --- | ---- --- | 2196 693 |
| | 4 D., Sp. 4 D., Top, Insert or Cover Right | 1 | ---- --- | ---- --- | ---- --- | ---- --- | 1961 300 |
| | Left | 1 | ---- --- | ---- --- | ---- --- | ---- --- | 1961 301 |
| | Sp. 4 D., Side, PKG. Right | 1 | ---- --- | ---- --- | ---- --- | ---- --- | 2196 696 |
| | Left | 1 | ---- --- | ---- --- | ---- --- | ---- --- | 2196 697 |
| | Sp. Cl. Cp., Upper, PKG. Right | 1 | ---- --- | ---- --- | ---- --- | ---- --- | 2196 694 |
| | Left | 1 | ---- --- | ---- --- | ---- --- | ---- --- | 2196 695 |
| | Sp. Cl. Cp., Side, PKG. Right | 1 | ---- --- | ---- --- | ---- --- | ---- --- | 2196 698 |
| | Left | 1 | ---- --- | ---- --- | ---- --- | ---- --- | 2196 699 |
| 23-23-49 | MOULDING, Folding Top Belt Outside Finish | | | | | | |
| | Cv. Cp. Rear, Right | 1 | 1963 330 | 1963 332 | ---- --- | 1963 334 | ---- --- |
| | Left | 1 | 1963 331 | 1963 333 | ---- --- | 1963 335 | ---- --- |
| | SCREW | 20 | 161 798 | 161 798 | ---- --- | 161 798 | ---- --- |
| | STUD/FASTENER | 23 | 6000 433 | 6000 433 | ---- --- | 6000 433 | ---- --- |
| | SCREW | 40 | ---- --- | ---- --- | ---- --- | ---- --- | 125 978 |
| | STUD/FASTENER | 19 | ---- --- | ---- --- | ---- --- | ---- --- | 6000 433 |
| | Cv. Cp., Rear, PKG. Right | 1 | ---- --- | ---- --- | ---- --- | ---- --- | 2196 684 |
| | Left | 1 | ---- --- | ---- --- | ---- --- | ---- --- | 2196 685 |
| | FASTENER | 18 | ---- --- | ---- --- | ---- --- | ---- --- | 6000 433 |
| 23-23-52 | MOULDING, Rear Window Outside Finish | | | | | | |
| | Sp. 4 D., P1-H, P2-H, D3, D4, Lower End, w/High Window, PKG. Right | 1 | 2084 776 | 2084 776 | ---- --- | ---- --- | ---- --- |
| | Left | 1 | ⊟2275 336 | ⊟2275 336 | ---- --- | ---- --- | ---- --- |
| | CLIP | 2 | 6000 721 | 6000 721 | ---- --- | ---- --- | ---- --- |
| | SCREW | 2 | 161 589 | 161 589 | ---- --- | ---- --- | ---- --- |
| | Sp. 4 D., P1-H, P2-H, D3, D4, w/High Window, Upper and Side, PKG. Right | 1 | 2084 778 | 2084 778 | ---- --- | ---- --- | ---- --- |
| | Left | 1 | 2084 779 | 2084 779 | ---- --- | ---- --- | ---- --- |
| | CLIP | 10 | 6000 692 | 6000 692 | ---- --- | ---- --- | ---- --- |
| | Sp. Cl. Cp., D1, D3-M, D4-M, w/Low Window, PKG. Upper | 1 | ---- --- | 2196 281 | ---- --- | ---- --- | ---- --- |
| | CLIP | 10 | ---- --- | 6000 692 | ---- --- | ---- --- | ---- --- |
| | Sp. Cl. Cp., D1, D3-M, D4-M, w/Low Window, PKG. Side Right | 1 | ---- --- | 2196 276 | ---- --- | ---- --- | ---- --- |
| | Left | 1 | ---- --- | 2196 277 | ---- --- | ---- --- | ---- --- |
| | CLIP | 6 | ---- --- | 6000 722 | ---- --- | ---- --- | ---- --- |
| | CLIP | 6 | ---- --- | 6000 692 | ---- --- | ---- --- | ---- --- |



MyMopar.com

## 23-23-0 OUTSIDE FINISH MOULDING-Cont'd

| CODE | REMARKS | PER CAR | PLYMOUTH | DODGE | DESOTO | CHRYSLER | IMPERIAL |
|---|---|---|---|---|---|---|---|
| 23-23-52 | MOULDING - Cont'd | | | | | | |
| | Sp. Cl. Cp., High Window, PKG. Upper | 1 | ---- --- | 2196 280 | ---- --- | ---- --- | ---- --- |
| | CLIP | 10 | ---- --- | 6000 692 | ---- --- | ---- --- | ---- --- |
| | Sp. Cl. Cp., D1, D2, D3-M, D4-M, D3-H, D4-H, w/High Window, PKG. Side, Right | 1 | ---- --- | 2196 278 | ---- --- | ---- --- | ---- --- |
| | Left | 1 | ---- --- | 2196 279 | ---- --- | ---- --- | ---- --- |
| | CLIP | 8 | ---- --- | 6000 722 | ---- --- | ---- --- | ---- --- |
| | CLIP | 8 | ---- --- | 6000 692 | ---- --- | ---- --- | ---- --- |
| | Sp. Cl. Cp., P1-M, P2-M, w/Low Window Side, PKG. Right | 1 | 2084 782 | ---- --- | ---- --- | ---- --- | ---- --- |
| | Left | 1 | 2084 783 | ---- --- | ---- --- | ---- --- | ---- --- |
| | CLIP | 10 | 6000 692 | ---- --- | ---- --- | ---- --- | ---- --- |
| | 4 D., Sp. 4 D., Cl. Sed., D3, D4, w/Low Window, Side and Upper, PKG. Right | 1 | 2084 770 | 2084 770 | ---- --- | ---- --- | ---- --- |
| | Left | 1 | 2084 771 | 2084 771 | ---- --- | ---- --- | ---- --- |
| | CLIP | 10 | 6000 692 | 6000 692 | ---- --- | ---- --- | ---- --- |
| | 4 D., Sp. 4 D., Cl. Sed., D3, D4, Lower, PKG. Right | 1 | 2084 774 | 2084 774 | ---- --- | ---- --- | ---- --- |
| | Left | 1 | 2084 775 | 2084 775 | ---- --- | ---- --- | ---- --- |
| | CLIP | 12 | 6000 693 | 6000 693 | ---- --- | ---- --- | ---- --- |
| | Sp. Cl. Cp., w/High Window, Side, PKG. Right | 1 | 2084 780 | ---- --- | ---- --- | ---- --- | ---- --- |
| | Left | 1 | 2084 781 | ---- --- | ---- --- | ---- --- | ---- --- |
| | CLIP | 10 | 6000 692 | ---- --- | ---- --- | ---- --- | ---- --- |
| | Sp. Cl. Cp., Upper, PKG. | 1 | 2084 784 | ---- --- | ---- --- | ---- --- | ---- --- |
| | CLIP | 7 | 6000 692 | ---- --- | ---- --- | ---- --- | ---- --- |
| | Sp. Cl. Cp., D3, D4, Lower, PKG. | 1 | 2084 785 | 2084 785 | ---- --- | ---- --- | ---- --- |
| | CLIP | 7 | 6000 693 | 6000 693 | ---- --- | ---- --- | ---- --- |
| | Sp. 4 D., D3, D4, w/High Window, Lower End, PKG. Right | 1 | ---- --- | 2196 274 | ---- --- | ---- --- | ---- --- |
| | Left | 1 | ---- --- | 2196 275 | ---- --- | ---- --- | ---- --- |
| | CLIP | 2 | ---- --- | 6000 721 | ---- --- | ---- --- | ---- --- |
| | Sp. 4 D., D1, D2, w/High Window, Upper and Side, PKG. Right | 1 | ---- --- | 2196 288 | ---- --- | ---- --- | ---- --- |
| | Left | 1 | ---- --- | 2196 289 | ---- --- | ---- --- | ---- --- |
| | CLIP | 10 | ---- --- | 6000 692 | ---- --- | ---- --- | ---- --- |
| | Lower End, PKG. Right | 1 | ---- --- | 2196 278 | ---- --- | ---- --- | ---- --- |
| | Left | 1 | ---- --- | 2196 279 | ---- --- | ---- --- | ---- --- |
| | CLIP | 2 | ---- --- | 6000 773 | ---- --- | ---- --- | ---- --- |
| | Sp. Cl. Cp., w/High Window, Upper and Side, PKG. Right | 1 | ---- --- | ---- --- | *2196 808 | *2196 808 | ---- --- |
| | Left | 1 | ---- --- | ---- --- | 2196 809 | 2196 809 | ---- --- |
| | CLIP | 12 | ---- --- | ---- --- | 6000 692 | 6000 692 | ---- --- |
| | 4 D., Sp. 4 D., D1, D2, w/Low Window, Upper and Side, PKG. Right | 1 | ---- --- | 2196 282 | 2196 282 | 2196 282 | ---- --- |
| | Left | 1 | ---- --- | 2196 283 | 2196 283 | 2196 283 | ---- --- |
| | CLIP | 10 | ---- --- | 6000 692 | 6000 692 | 6000 692 | ---- --- |
| | PKG. Lower | 1 | ---- --- | 2196 292 | 2196 292 | 2196 292 | ---- --- |
| | CLIP | 14 | ---- --- | 6000 689 | 6000 689 | 6000 689 | ---- --- |
| | Lower End, PKG. Right | 1 | ---- --- | 2196 284 | 2196 284 | 2196 284 | ---- --- |
| | Left | 1 | ---- --- | 2196 285 | 2196 285 | 2196 285 | ---- --- |
| | CLIP | 2 | ---- --- | 6000 773 | 6000 773 | 6000 773 | ---- --- |
| | CLIP | 2 | ---- --- | 6008 084 | 6008 084 | 6008 084 | ---- --- |
| | SCREW | 2 | ---- --- | 161 592 | 161 592 | 161 592 | ---- --- |
| | SCREW | 2 | ---- --- | 125 675 | 125 675 | 125 675 | ---- --- |
| | Sp. Cl. Cp., D1, D2, PKG. Lower | 1 | ---- --- | 2196 293 | ---- --- | ---- --- | ---- --- |
| | CLIP | 10 | ---- --- | 6000 689 | ---- --- | ---- --- | ---- --- |
| | Sp. Cl. Cp., PKG., w/High Window, Lower Center | 1 | ---- --- | ---- --- | *2196 812 | *2196 812 | ---- --- |
| | Sp. Cl. Cp., PKG., w/High Window, Lower Side, Right | 1 | ---- --- | ---- --- | *2196 810 | *2196 810 | ---- --- |
| | Left | 1 | ---- --- | ---- --- | 2196 811 | 2196 811 | ---- --- |
| | Sp. 4 D., S3, w/High Window, Upper and Side, PKG. Right | 1 | ---- --- | ---- --- | 2196 288 | ---- --- | ---- --- |
| | Left | 1 | ---- --- | ---- --- | 2196 289 | ---- --- | ---- --- |
| | CLIP | 10 | ---- --- | ---- --- | 6000 692 | ---- --- | ---- --- |
| | Lower End, PKG. Right | 1 | ---- --- | ---- --- | 2196 286 | ---- --- | ---- --- |
| | Left | 1 | ---- --- | ---- --- | 2196 287 | ---- --- | ---- --- |


MyMopar.com

## 23-23-0 OUTSIDE FINISH MOULDING-Cont'd

| CODE | REMARKS | PER CAR | PLYMOUTH | DODGE | DESOTO | CHRYSLER | IMPERIAL |
|---|---|---|---|---|---|---|---|
| 23-23-52 | MOULDING - Cont'd | | | | | | |
| | CLIP | 2 | ---- --- | ---- --- | 6000 773 | ---- --- | ---- --- |
| | CLIP | 2 | ---- --- | ---- --- | 6000 688 | ---- --- | ---- --- |
| | SCREW | 2 | ---- --- | ---- --- | 161 592 | ---- --- | ---- --- |
| | SCREW | 2 | ---- --- | ---- --- | 125 675 | ---- --- | ---- --- |
| | 4 D., Sp. 4 D., w/High Window, Upper and Side, PKG. Right | 1 | ---- --- | ---- --- | ---- --- | 2196 288 | ---- --- |
| | Left | 1 | ---- --- | ---- --- | ---- --- | 2196 289 | ---- --- |
| | CLIP | 10 | ---- --- | ---- --- | ---- --- | 6000 692 | ---- --- |
| | Lower End, PKG. Right | 1 | ---- --- | ---- --- | ---- --- | 2196 286 | ---- --- |
| | Left | 1 | ---- --- | ---- --- | ---- --- | 2196 287 | ---- --- |
| | CLIP | 2 | ---- --- | ---- --- | ---- --- | 6000 773 | ---- --- |
| | CLIP | 2 | ---- --- | ---- --- | ---- --- | 6000 688 | ---- --- |
| | SCREW | 2 | ---- --- | ---- --- | ---- --- | 125 675 | ---- --- |
| | SCREW | 2 | ---- --- | ---- --- | ---- --- | 161 592 | ---- --- |
| | 4 D., Sp. 4 D., Y1-L, Y1-M, PKG. Upper | 1 | ---- --- | ---- --- | ---- --- | ---- --- | 2196 822 |
| | PKG. Side, Right | 1 | ---- --- | ---- --- | ---- --- | ---- --- | 2196 824 |
| | Left | 1 | ---- --- | ---- --- | ---- --- | ---- --- | 2196 825 |
| | CLIP | 24 | ---- --- | ---- --- | ---- --- | ---- --- | 6006 201 |
| | PKG. Lower, Right | 1 | ---- --- | ---- --- | ---- --- | ---- --- | 2196 690 |
| | Left | 1 | ---- --- | ---- --- | ---- --- | ---- --- | 2196 691 |
| | CLIP | 18 | ---- --- | ---- --- | ---- --- | ---- --- | 6006 200 |
| | 4 D., Sp. 4 D., Y1-H Right | 1 | ---- --- | ---- --- | ---- --- | ---- --- | 1961 516 |
| | Left | 1 | ---- --- | ---- --- | ---- --- | ---- --- | 1961 517 |
| | Sp. Cl. Cp., PKG. Upper | 1 | ---- --- | ---- --- | ---- --- | ---- --- | 2196 823 |
| | PKG. Side, Right | 1 | ---- --- | ---- --- | ---- --- | ---- --- | 2196 826 |
| | Left | 1 | ---- --- | ---- --- | ---- --- | ---- --- | 2196 827 |
| | CLIP | 24 | ---- --- | ---- --- | ---- --- | ---- --- | 6006 201 |
| | PKG. Lower, Right | 1 | ---- --- | ---- --- | ---- --- | ---- --- | 2196 688 |
| | Left | 1 | ---- --- | ---- --- | ---- --- | ---- --- | 2196 689 |
| | CLIP | 16 | ---- --- | ---- --- | ---- --- | ---- --- | 6006 200 |
| 23-23-60 | MOULDING, Tailgate Opening Outside Finish Sub., PKG. Roof Rear | 1 | 2196 466 | 2196 466 | ---- --- | 2196 466 | ---- --- |
| | CLIP | 14 | 6006 451 | 6006 451 | ---- --- | 6006 451 | ---- --- |
| | CAP, PKG. Right | 1 | 2196 464 | 2196 464 | ---- --- | 2196 464 | ---- --- |
| | Left | 1 | 2196 465 | 2196 465 | ---- --- | 2196 465 | ---- --- |
| | CLIP | 2 | 6006 451 | 6006 451 | ---- --- | 6006 451 | ---- --- |
| | Rear Upper Pillar, PKG. Right | 1 | 2196 462 | 2196 462 | ---- --- | 2196 462 | ---- --- |
| | Left | 1 | 2196 463 | 2196 463 | ---- --- | 2196 463 | ---- --- |
| | CLIP | 4 | 6006 451 | 6006 451 | ---- --- | 6006 451 | ---- --- |
| 23-23-61 | MOULDING PACKAGE, Tailgate Outside Finish Belt, Sub. | 1 | 2196 460 | 2196 460 | ---- --- | 2196 460 | ---- --- |
| | SCREW | 5 | 178 790 | 178 790 | ---- --- | 178 790 | ---- --- |
| | CLIP | 2 | 6006 441 | 6006 441 | ---- --- | 6006 441 | ---- --- |
| | SCREW | 2 | 151 306 | 151 306 | ---- --- | 151 306 | ---- --- |
| | Sub., Lower | 1 | ---- --- | *2196 458 | ---- --- | ---- --- | ---- --- |
| | SCREW | 7 | ---- --- | 167 834 | ---- --- | ---- --- | ---- --- |
| | CLIP | 7 | ---- --- | 6006 458 | ---- --- | ---- --- | ---- --- |
| | Sp. 4 D. Sub., Lower | 1 | ---- --- | ---- --- | ---- --- | 2196 468 | ---- --- |
| | CLIP | 7 | ---- --- | ---- --- | ---- --- | 6006 457 | ---- --- |
| | SCREW | 7 | ---- --- | ---- --- | ---- --- | 167 834 | ---- --- |
| 23-23-64 | PANEL, Windshield Header Outside Finish Cv. Cp., PKG. | 1 | 2196 119 | 2196 119 | ---- --- | 2196 119 | ---- --- |
| | SCREW | 5 | 274 109 | 274 109 | ---- --- | 274 109 | ---- --- |
| 23-23-65 | MOULDING, Windshield Outside Finish Cv. Cp., Side, w/EXTENSION, PKG. Right | 1 | 2084 998 | 2084 998 | ---- --- | 2084 998 | ---- --- |
| | Left | 1 | 2084 999 | 2084 999 | ---- --- | 2084 999 | ---- --- |
| | SCREW | 2 | 274 109 | 274 109 | 274 109 | 274 109 | ---- --- |
| | Except Cv. Cp., PKG. Upper | 1 | 2196 873 | 2196 873 | 2196 873 | 2196 873 | ---- --- |
| | CLIP | 7 | 6000 742 | 6000 742 | 6000 742 | 6000 742 | ---- --- |
| | Except Cv. Cp., Side, PKG. Right | 1 | 2196 270 | 2196 270 | 2196 270 | 2196 270 | ---- --- |
| | Left | 1 | 2196 271 | 2196 271 | 2196 271 | 2196 271 | ---- --- |
| | SCREW | 8 | 6000 009 | 6000 009 | 6000 009 | 6000 009 | ---- --- |



MyMopar.com

## 23-23-0 OUTSIDE FINISH MOULDING-Cont'd

| CODE | REMARKS | | PER CAR | PLYMOUTH | DODGE | DESOTO | CHRYSLER | IMPERIAL |
|---|---|---|---|---|---|---|---|---|
| 23-23-65 | MOULDING - Cont'd | | | | | | | |
| | Lower Center, PKG. | | 1 | 2084 997 | 2084 997 | 2084 997 | 2084 997 | ---- --- |
| | CLIP | | 5 | 6000 685 | 6000 685 | 6000 685 | 6000 685 | ---- --- |
| | Lower End, PKG. | Right | 1 | 2196 272 | 2196 272 | 2196 272 | 2196 272 | ---- --- |
| | | Left | 1 | 2196 273 | 2196 273 | 2196 273 | 2196 273 | ---- --- |
| | CLIP | | 2 | 6000 685 | 6000 685 | 6000 685 | 6000 685 | ---- --- |
| | 4 D., Sp. 4 D., Sp. Cl. Cp., Upper, PKG. | Right | 1 | ---- --- | ---- --- | ---- --- | ---- --- | 2196 474 |
| | | Left | 1 | ---- --- | ---- --- | ---- --- | ---- --- | 2196 475 |
| | RETAINER | | 2 | ---- --- | ---- --- | ---- --- | ---- --- | 6006 338 |
| | RETAINER | | 4 | ---- --- | ---- --- | ---- --- | ---- --- | 6006 414 |
| | Side, PKG. | Right | 1 | ---- --- | ---- --- | ---- --- | ---- --- | 2196 472 |
| | | Left | 1 | ---- --- | ---- --- | ---- --- | ---- --- | 2196 473 |
| | SCREW | | 8 | ---- --- | ---- --- | ---- --- | ---- --- | 6000 000 |
| | Cv. Cp., PKG. | Upper | 1 | ---- --- | ---- --- | ---- --- | ---- --- | 2196 749 |
| | STUD | | 5 | ---- --- | ---- --- | ---- --- | ---- --- | 6006 176 |
| | RETAINER | | 5 | ---- --- | ---- --- | ---- --- | ---- --- | 6006 434 |
| | Header, Upper Corner, PKG. | Right | 1 | ---- --- | ---- --- | ---- --- | ---- --- | 2196 673 |
| | | Left | 1 | ---- --- | ---- --- | ---- --- | ---- --- | 2196 674 |
| | Side, PKG. | Right | 1 | ---- --- | ---- --- | ---- --- | ---- --- | 2196 481 |
| | | Left | 1 | ---- --- | ---- --- | ---- --- | ---- --- | 2196 482 |
| | SCREW | | 6 | ---- --- | ---- --- | ---- --- | ---- --- | 6000 000 |
| | Lower, PKG. | Right | 1 | ---- --- | ---- --- | ---- --- | ---- --- | 2196 477 |
| | | Left | 1 | ---- --- | ---- --- | ---- --- | ---- --- | 2196 478 |
| | CLIP | | 20 | ---- --- | ---- --- | ---- --- | ---- --- | 6006 200 |
| 23-23-66 | CAP, Windshield Outside Finish Moulding Joint | | | | | | | |
| | 4 D., Sp. 4 D., Sp. Cl. Cp., PKG. | Upper Center | 1 | ---- --- | ---- --- | ---- --- | ---- --- | 2196 476 |
| | SEAL | | 1 | ---- --- | ---- --- | ---- --- | ---- --- | 1961 286 |
| | | Lower Center | 1 | ---- --- | ---- --- | ---- --- | ---- --- | 1692 191 |
| 23-23-73 | MOULDING, Quarter Window Outside Finish | | | | | | | |
| | Sub. | Lower Right | 1 | 1961 214 | 1961 214 | ---- --- | 1961 214 | ---- --- |
| | | Left | 1 | 1961 215 | 1961 215 | ---- --- | 1961 215 | ---- --- |
| | Sub. | Upper Right | 1 | 1961 212 | 1961 212 | ---- --- | 1961 212 | ---- --- |
| | | Left | 1 | 1961 213 | 1961 213 | ---- --- | 1961 213 | ---- --- |
| | Sub. | Front Right | 1 | 2094 018 | 2094 018 | ---- --- | 2094 018 | ---- --- |
| | | Left | 1 | 2094 019 | 2094 019 | ---- --- | 2094 019 | ---- --- |
| 23-23-74 | CAP, Quarter Window Outside Finish Moulding | | | | | | | |
| | Sub., w/RETAINER | Front Upper Right | 1 | 2094 016 | 2094 016 | ---- --- | 2094 016 | ---- --- |
| | | Left | 1 | 2094 017 | 2094 017 | ---- --- | 2094 017 | ---- --- |
| | Sub., PKG. | Lower Rear Right | 1 | 2196 816 | 2196 816 | ---- --- | 2196 816 | ---- --- |
| | | Left | 1 | 2196 817 | 2196 817 | ---- --- | 2196 817 | ---- --- |
| 23-23-80 | PANEL, Door Outside Finish | | | | | | | |
| | 4 D., Sp. 4 D., D3-M, D4-M, Rear Door | Right | 1 | ---- --- | 1963 126 | ---- --- | ---- --- | ---- --- |
| | | Left | 1 | ---- --- | 1963 127 | ---- --- | ---- --- | ---- --- |
| | 4 D., Sp. 4 D., D3-H, D4-H, Rear Door | Right | 1 | ---- --- | 1963 110 | ---- --- | ---- --- | ---- --- |
| | | Left | 1 | ---- --- | 1963 111 | ---- --- | ---- --- | ---- --- |
| | PLATE, Door Outside Finish | | | | | | | |
| | 4 D., Sub., D3, D4, PKG. | Right | 1 | ---- --- | 2196 438 | ---- --- | ---- --- | ---- --- |
| | | Left | 1 | ---- --- | 2196 439 | ---- --- | ---- --- | ---- --- |
| | SCREW | | 4 | ---- --- | 9414 078 | ---- --- | ---- --- | ---- --- |
| 23-23-85 | PANEL, Quarter Panel Outside Finish | | | | | | | |
| | 4 D., Sp. 4 D., D3-H, D4-H | Right | 1 | ---- --- | 1963 112 | ---- --- | ---- --- | ---- --- |
| | | Left | 1 | ---- --- | 1963 113 | ---- --- | ---- --- | ---- --- |
| | Sp. Cl. Cp., Cl. Sed., D3-M, D4-M | Right | 1 | ---- --- | 1963 126 | ---- --- | ---- --- | ---- --- |
| | | Left | 1 | ---- --- | 1963 127 | ---- --- | ---- --- | ---- --- |
| | Sp. Cl. Cp., Cv. Cp., D4-H, Y1-M | Right | 1 | ---- --- | 1963 114 | ---- --- | ---- --- | ---- --- |
| | | Left | 1 | ---- --- | 1963 115 | ---- --- | ---- --- | ---- --- |
| 23-23-86 | INSERT, Quarter Panel Outside Finish Top Rear Moulding | | | | | | | |
| | Sp. Cl. Cp., 4 D., Sp. 4 D., D1, PKG., | Chrome | 2 | ---- --- | *2196 417 | ---- --- | ---- --- | ---- --- |
| | NUT | | 2 | ---- --- | 151 497 | ---- --- | ---- --- | ---- --- |
| | Sp. Cl. Cp., Cv. Cp., 4D., Sp. 4D., D2, PKG., | Plastic | 2 | ---- --- | *2196 416 | ---- --- | ---- --- | ---- --- |
| | NUT | | 2 | ---- --- | 151 497 | ---- --- | ---- --- | ---- --- |



MyMopar.com

## 23-26-0 TRIM FINISH MOULDINGS

| CODE | REMARKS | | PER CAR | PLYMOUTH | DODGE | DESOTO | CHRYSLER | IMPERIAL |
|---|---|---|---|---|---|---|---|---|
| 23-26-2 | MOULDING, Rear Quarter Arm Rest | | | | | | | |
| | Sp. Cl. Cp., P2-H | | 2 | 1868 886 | ---- --- | ---- --- | ---- --- | ---- --- |
| | Sp. Cl. Cp., P1-H, P2-H, Mylar Tape | | 2 | *2194 110 | ---- --- | ---- --- | ---- --- | ---- --- |
| | Sp. Cl. Cp., Cv. Cp., Y1-M, | Right | 2 | ---- --- | ---- --- | ---- --- | ---- --- | *2085 826 |
| | | Left | 2 | ---- --- | ---- --- | ---- --- | ---- --- | *2085 827 |
| | Sp. Cl. Cp., S3 | Right | 1 | ---- --- | ---- --- | 2080 396 | ---- --- | ---- --- |
| | | Left | 1 | ---- --- | ---- --- | 2080 397 | ---- --- | ---- --- |
| 23-26-23 | MOULDING, Door Trim Panel | | | | | | | |
| | 4D., Sp. 4D., 4D. Sub., P1-H, P2-H | Rear | 2 | 1867 583 | ---- --- | ---- --- | ---- --- | ---- --- |
| | Cl. Sed., P1-L, P2-L, P1-M, P2-M | | 2 | 1778 529 | ---- --- | ---- --- | ---- --- | ---- --- |
| | Cl. Sed., Sp. Cl. Cp., P1-M, P2-M | | 2 | 1977 408 | ---- --- | ---- --- | ---- --- | ---- --- |
| | 4 D. Sub., P1-M, P2-M | Right | 1 | 1977 404 | ---- --- | ---- --- | ---- --- | ---- --- |
| | | Left | 1 | 1977 405 | ---- --- | ---- --- | ---- --- | ---- --- |
| | 4 D., 4 D. Sub., P1-M, P2-M | Front | 2 | 1977 407 | ---- --- | ---- --- | ---- --- | ---- --- |
| | 4 D., P1-M, P2-M | Rear Right | 1 | 1977 402 | ---- --- | ---- --- | ---- --- | ---- --- |
| | | Left | 1 | 1977 403 | ---- --- | ---- --- | ---- --- | ---- --- |
| | Cl. Sed., Sp. Cl. Cp., 4D., Sp. 4D., 4D. Sub., Sp. 4D. Sub., P1-H, P2-H, Mylar Tape, Front Door Arm Rest | | 2 | ⊟2194 109 | ---- --- | ---- --- | ---- --- | ---- --- |
| | 4D., Sp. 4D., 4D. Sub., Sp. 4D. Sub., P1-H, P2-H, Mylar Tape, Rear Door Arm Rest | | 2 | ⊟2194 109 | ---- --- | ---- --- | ---- --- | ---- --- |
| | Cl. Sed., Sp. Cl. Cp., D3, D4, Upper and Lower | Right | 2 | ---- --- | 2192 648 | ---- --- | ---- --- | ---- --- |
| | | Left | 2 | ---- --- | 2192 649 | ---- --- | ---- --- | ---- --- |
| | Sp. Cl. Cp., Cv. Cp., D2, Upper Center | Right | 1 | ---- --- | 2192 120 | ---- --- | ---- --- | ---- --- |
| | | Left | 1 | ---- --- | 2192 121 | ---- --- | ---- --- | ---- --- |
| | 4 D., 4 D. Sub., D1, D2, Front Center Upper | Right | 1 | ---- --- | 2192 116 | ---- --- | ---- --- | ---- --- |
| | | Left | 1 | ---- --- | 2192 117 | ---- --- | ---- --- | ---- --- |
| | Sp. 4 D., Sp. 4 D. Sub., D1, D2, Front Center Upper | Right | 1 | ---- --- | 2192 118 | ---- --- | ---- --- | ---- --- |
| | | Left | 1 | ---- --- | 2192 119 | ---- --- | ---- --- | ---- --- |
| | Sp. 4 D., Sp. 4 D. Sub., D1, D2, Front Center | Lower | 2 | ---- --- | 2192 123 | ---- --- | ---- --- | ---- --- |
| | Sp. Cl. Cp., Cv. Cp., D1, D2, Center | Lower | 2 | ---- --- | 2192 124 | ---- --- | ---- --- | ---- --- |
| | 4 D., 4 D. Sub., D1, D2, Rear Center | Lower | 2 | ---- --- | 2192 126 | ---- --- | ---- --- | ---- --- |
| | Sp. 4D., Sp. 4D. Sub., D1, D2, Rear Center | Lower | 2 | ---- --- | 2192 127 | ---- --- | ---- --- | ---- --- |
| | 4 D., Sp. 4 D., Sp. 4 D. Sub., D1, D2, Rear Center | Upper | 2 | ---- --- | 2192 125 | ---- --- | ---- --- | ---- --- |
| | Sp. Cl. Cp., Cv. Cp., D1, D2 | Right | 1 | ---- --- | 2192 114 | ---- --- | ---- --- | ---- --- |
| | | Left | 1 | ---- --- | 2192 115 | ---- --- | ---- --- | ---- --- |
| | Sp. 4 D., Sp. 4 D. Sub., D1, D2, Front | Right | 1 | ---- --- | 2192 112 | ---- --- | ---- --- | ---- --- |
| | | Left | 1 | ---- --- | 2192 113 | ---- --- | ---- --- | ---- --- |
| | 4 D., 4 D. Sub., D1, D2 | Front Right | 1 | ---- --- | 2192 110 | ---- --- | ---- --- | ---- --- |
| | | Left | 1 | ---- --- | 2192 111 | ---- --- | ---- --- | ---- --- |
| | 4D., 4D. Sub., D1, D2, Front Center | Lower | 2 | ---- --- | 2192 122 | ---- --- | ---- --- | ---- --- |
| | Sp. 4 D., D1 | Front Upper Right | 1 | ---- --- | 1974 114 | ---- --- | ---- --- | ---- --- |
| | | Left | 1 | ---- --- | 1974 115 | ---- --- | ---- --- | ---- --- |
| | Sp. 4 D., D1 | Front Lower Right | 1 | ---- --- | 1974 118 | ---- --- | ---- --- | ---- --- |
| | | Left | 1 | ---- --- | 1974 119 | ---- --- | ---- --- | ---- --- |
| | Sp. 4 D., D1 | Rear Lower Right | 1 | ---- --- | 1974 106 | ---- --- | ---- --- | ---- --- |
| | | Left | 1 | ---- --- | 1974 107 | ---- --- | ---- --- | ---- --- |
| | 4 D., 4 D. Sub., D1 | Rear Lower Right | 1 | ---- --- | 1974 122 | ---- --- | ---- --- | ---- --- |
| | | Left | 1 | ---- --- | 1974 123 | ---- --- | ---- --- | ---- --- |
| | Sp. 4 D., Sp 4 D. Sub., D2 | Rear Upper Right | 1 | ---- --- | 1974 772 | ---- --- | ---- --- | ---- --- |
| | | Left | 1 | ---- --- | 1974 773 | ---- --- | ---- --- | ---- --- |
| | Sp. 4 D., Sp. 4 D. Sub., D2 | Rear Lower Right | 1 | ---- --- | 1974 774 | ---- --- | ---- --- | ---- --- |
| | | Left | 1 | ---- --- | 1974 775 | ---- --- | ---- --- | ---- --- |
| | 4 D., D3-M, D4-M | Rear Lower Right | 1 | ---- --- | 1974 784 | ---- --- | ---- --- | ---- --- |
| | | Left | 1 | ---- --- | 1974 785 | ---- --- | ---- --- | ---- --- |
| | 4 D., D3-M, D4-M | Rear Upper | 2 | ---- --- | 1974 767 | ---- --- | ---- --- | ---- --- |
| | 4 D. Sub., D3-M, D4-M | Rear Upper | 2 | ---- --- | 1974 097 | ---- --- | ---- --- | ---- --- |

★ Indicates use as required.
⊟ Indicates parts not listed in any previous parts book.
* Indicates change or addition.



MyMopar.com

## 23-26-0 TRIM FINISH MOULDINGS - Cont'd

| CODE | REMARKS | | PER CAR | PLYMOUTH | DODGE | DESOTO | CHRYSLER | IMPERIAL |
|---|---|---|---|---|---|---|---|---|
| 23-26-23 | MOULDING - Cont'd | | | | | | | |
| | 4 D. Sub., D3-M, D4-M | Rear Lower Right | 1 | ---- --- | 1974 120 | ---- --- | ---- --- | ---- --- |
| | | Left | 1 | ---- --- | 1974 121 | ---- --- | ---- --- | ---- --- |
| | Sp. Cl. Cp., D1 | Upper Right | 1 | ---- --- | 1974 108 | ---- --- | ---- --- | ---- --- |
| | | Left | 1 | ---- --- | 1974 109 | ---- --- | ---- --- | ---- --- |
| | 4 D., 4 D. Sub., D1 | Rear Upper | 2 | ---- --- | 1974 105 | ---- --- | ---- --- | ---- --- |
| | Sp. 4 D., D1 | Rear Upper | 2 | ---- --- | 1974 104 | ---- --- | ---- --- | ---- --- |
| | Sp. Cl. Cp., D1 | Lower Right | 1 | ---- --- | 1974 110 | ---- --- | ---- --- | ---- --- |
| | | Left | 1 | ---- --- | 1974 111 | ---- --- | ---- --- | ---- --- |
| | 4 D., 4 D. Sub., D1 | Front Upper Right | 1 | ---- --- | 1974 112 | ---- --- | ---- --- | ---- --- |
| | | Left | 1 | ---- --- | 1974 113 | ---- --- | ---- --- | ---- --- |
| | 4 D., 4 D. Sub., D1 | Front Lower Right | 1 | ---- --- | 1974 116 | ---- --- | ---- --- | ---- --- |
| | | Left | 1 | ---- --- | 1974 117 | ---- --- | ---- --- | ---- --- |
| | 4 D., D2, Front Center | Lower | 2 | ---- --- | 2192 122 | ---- --- | ---- --- | ---- --- |
| | 4 D., D2, Front Center | Upper Right | 1 | ---- --- | 2192 116 | ---- --- | ---- --- | ---- --- |
| | | Left | 1 | ---- --- | 2192 117 | ---- --- | ---- --- | ---- --- |
| | 4 D., 4 D. Sub., D3, D4 | Front Right | 1 | ---- --- | 2192 650 | ---- --- | ---- --- | ---- --- |
| | | Left | 1 | ---- --- | 2192 651 | ---- --- | ---- --- | ---- --- |
| | 4 D. Sub., D1 | Rear Upper | 2 | ---- --- | 1974 776 | ---- --- | ---- --- | ---- --- |
| | 4 D. Sub., D1 | Rear Lower Right | 1 | ---- --- | 1974 778 | ---- --- | ---- --- | ---- --- |
| | | Left | 1 | ---- --- | 1974 779 | ---- --- | ---- --- | ---- --- |
| | 4 D., D2 | Rear Upper | 2 | ---- --- | 1974 776 | ---- --- | ---- --- | ---- --- |
| | 4 D., D2 | Rear Lower Right | 1 | ---- --- | 1974 778 | ---- --- | ---- --- | ---- --- |
| | | Left | 1 | ---- --- | 1974 779 | ---- --- | ---- --- | ---- --- |
| | 4 D., Sp. 4 D., Sub., D2, Rear Center | Upper | 2 | ---- --- | 2192 125 | ---- --- | ---- --- | ---- --- |
| | Sp. Cl. Cp., Cv. Cp., D2, Center | Lower | 2 | ---- --- | 2192 124 | ---- --- | ---- --- | ---- --- |
| | Cl. Sed., Sp. Cl. Cp., D3, D4 | Right | 1 | ---- --- | 2192 648 | ---- --- | ---- --- | ---- --- |
| | | Left | 1 | ---- --- | 2192 649 | ---- --- | ---- --- | ---- --- |
| | Sub., D1, Rear Center | Lower | 2 | ---- --- | 2192 126 | ---- --- | ---- --- | ---- --- |
| | 4 D., D2, Rear Center | Lower | 2 | ---- --- | 2192 126 | ---- --- | ---- --- | ---- --- |
| | Sp. 4 D., D1, Rear Center | Upper | 2 | ---- --- | 2192 125 | ---- --- | ---- --- | ---- --- |
| | 4 D., Sp. 4 D., Sub., D2, Rear Center | Upper | 2 | ---- --- | 2192 125 | ---- --- | ---- --- | ---- --- |
| | Sp. Cl. Cp., Sp. 4 D., S3, Arm Rest | Right | ★ | ---- --- | ---- --- | 2080 394 | ---- --- | ---- --- |
| | | Left | ★ | ---- --- | ---- --- | 2080 395 | ---- --- | ---- --- |
| | Sp. 4D | Lower | 2 | ---- --- | ---- --- | 1647 239 | ---- --- | ---- --- |
| | Sp. 4 D., S3, Rear Intermediate | | 2 | ---- --- | ---- --- | 2085 170 | ---- --- | ---- --- |
| | Sp. Cl. Cp., S1 | Right | 1 | ---- --- | ---- --- | 2085 250 | ---- --- | ---- --- |
| | | Left | 1 | ---- --- | ---- --- | 2085 251 | ---- --- | ---- --- |
| | 4 D., Sp. 4 D., S1, Rear Upper | | 2 | ---- --- | ---- --- | 2085 492 | ---- --- | ---- --- |
| | 4 D., Sp. 4D., S3, Rear Lower | Right | 1 | ---- --- | ---- --- | 2085 172 | ---- --- | ---- --- |
| | | Left | 1 | ---- --- | ---- --- | 2085 173 | ---- --- | ---- --- |
| | Sp. 4 D., S3, Front Upper | Right | 1 | ---- --- | ---- --- | 2085 158 | ---- --- | ---- --- |
| | | Left | 1 | ---- --- | ---- --- | 2085 159 | ---- --- | ---- --- |
| | 4 D., S1, S3 | Front Right | 1 | ---- --- | ---- --- | 2085 246 | ---- --- | ---- --- |
| | | Left | 1 | ---- --- | ---- --- | 2085 247 | ---- --- | ---- --- |
| | Sp. Cl. Cp., S3 | Upper Right | 1 | ---- --- | ---- --- | 2085 090 | ---- --- | ---- --- |
| | | Left | 1 | ---- --- | ---- --- | 2085 091 | ---- --- | ---- --- |
| | Sp. Cl. Cp., S3 | Lower | 2 | ---- --- | ---- --- | 2085 800 | ---- --- | ---- --- |
| | 4 D., S3, Front Intermediate | Right | 1 | ---- --- | ---- --- | 2085 130 | ---- --- | ---- --- |
| | | Left | 1 | ---- --- | ---- --- | 2085 131 | ---- --- | ---- --- |
| | Sp. 4 D., S1 | Front Right | 1 | ---- --- | ---- --- | 2085 248 | ---- --- | ---- --- |
| | | Left | 1 | ---- --- | ---- --- | 2085 249 | ---- --- | ---- --- |
| | Sp. Cl. Cp., Rr. Quarter Arm Rest | Right | 1 | ---- --- | ---- --- | 2080 396 | ---- --- | ---- --- |
| | | Left | 1 | ---- --- | ---- --- | 2080 397 | ---- --- | ---- --- |
| | Sp. Cl. Cp., Cv. Cp., 4 D., Sp. 4 D., Sp. 4 D. Sub., C1-L | Front, Right | 1 | ---- --- | ---- --- | ---- --- | 1900 922 | ---- --- |
| | | Left | 1 | ---- --- | ---- --- | ---- --- | 1900 923 | ---- --- |
| | Sp. Cl. Cp., 4D., Sp. 4D., C2-M | Front Lower Right | 1 | ---- --- | ---- --- | ---- --- | 1900 922 | ---- --- |
| | | Left | 1 | ---- --- | ---- --- | ---- --- | 1900 923 | ---- --- |
| | Sp. 4 D., Sp. 4 D. Sub., C1-L | Rear Right | 1 | ---- --- | ---- --- | ---- --- | 1900 972 | ---- --- |
| | | Left | 1 | ---- --- | ---- --- | ---- --- | 1900 973 | ---- --- |
| | Sp. 4D., C2-M | Rear Lower Right | 1 | ---- --- | ---- --- | ---- --- | 1900 972 | ---- --- |
| | | Left | 1 | ---- --- | ---- --- | ---- --- | 1900 973 | ---- --- |
| | 4D., C1-L | Rear Right | 1 | ---- --- | ---- --- | ---- --- | 1900 958 | ---- --- |
| | | Left | 1 | ---- --- | ---- --- | ---- --- | 1900 959 | ---- --- |

★ Indicates use as required.
⊟ Indicates parts not listed in any previous parts book.
Printed in U.S.A.
Prices and specifications subject to change without notice.



MyMopar.com

## 23-26-0 TRIM FINISH MOULDINGS-Cont'd

| CODE | REMARKS | PER CAR | PLYMOUTH | DODGE | DESOTO | CHRYSLER | IMPERIAL |
|---|---|---|---|---|---|---|---|
| 23-26-23 | MOULDING - Cont'd | | | | | | |
| | 4D., C2-M Rear Lower Right | 1 | ---- --- | ---- --- | ---- --- | 1900 958 | ---- --- |
| | Left | 1 | ---- --- | ---- --- | ---- --- | 1900 959 | ---- --- |
| | 4 D., Sp. 4 D., Sp. 4 D. Sub., C3, Rear Lower Right | 1 | ---- --- | ---- --- | ---- --- | 2085 714 | ---- --- |
| | Left | 1 | ---- --- | ---- --- | ---- --- | 2085 715 | ---- --- |
| | C3 Front Upper Right | 1 | ---- --- | ---- --- | ---- --- | 2085 470 | ---- --- |
| | Left | 1 | ---- --- | ---- --- | ---- --- | 2085 471 | ---- --- |
| | 4 D., Sp. 4 D., C2 Rear Upper Right | 1 | ---- --- | ---- --- | ---- --- | 2085 012 | ---- --- |
| | Left | 1 | ---- --- | ---- --- | ---- --- | 2085 013 | ---- --- |
| | Sp. 4D., C1 Rear Upper Right | 1 | ---- --- | ---- --- | ---- --- | 2085 012 | ---- --- |
| | Left | 1 | ---- --- | ---- --- | ---- --- | 2085 013 | ---- --- |
| | 4 D., C2 Front Upper Right | 1 | ---- --- | ---- --- | ---- --- | 1900 984 | ---- --- |
| | Left | 1 | ---- --- | ---- --- | ---- --- | 1900 985 | ---- --- |
| | Sp. Cl. Cp., Cv. Cp., Sp. 4 D., C1, C2, Front Upper Right | 1 | ---- --- | ---- --- | ---- --- | 1900 984 | ---- --- |
| | Left | 1 | ---- --- | ---- --- | ---- --- | 1900 985 | ---- --- |
| | Sp. Cl. Cp., Cv. Cp., C3 Lower | 2 | ---- --- | ---- --- | ---- --- | 2085 800 | ---- --- |
| | 4 D., C3 Front Lower | 2 | ---- --- | ---- --- | ---- --- | 2085 709 | ---- --- |
| | 4 D., Sp. 4 D., Sub., C3, Rear Upper Right | 1 | ---- --- | ---- --- | ---- --- | 2085 480 | ---- --- |
| | Left | 1 | ---- --- | ---- --- | ---- --- | 2085 481 | ---- --- |
| | Sp. 4D., Sub., C3 Front Lower | 2 | ---- --- | ---- --- | ---- --- | 2085 475 | ---- --- |
| | 4 D., Y1-L, Front Door Upper Right | 1 | ---- --- | ---- --- | ---- --- | ---- --- | 2085 756 |
| | Left | 1 | ---- --- | ---- --- | ---- --- | ---- --- | 2085 757 |
| | DOOR/PULL Right | 1 | ---- --- | ---- --- | ---- --- | ---- --- | 2085 660 |
| | Left | 1 | ---- --- | ---- --- | ---- --- | ---- --- | 2085 661 |
| | SCREW, No. 8-15 x 1" | 6 | ---- --- | ---- --- | ---- --- | ---- --- | 148 095 |
| | GROMMET | 2 | ---- --- | ---- --- | ---- --- | ---- --- | 2085 862 |
| | STOP Upper and Lower Rear | 4 | ---- --- | ---- --- | ---- --- | ---- --- | 2080 982 |
| | Rear Door, CAP Right | 1 | ---- --- | ---- --- | ---- --- | ---- --- | 1830 498 |
| | Left | 1 | ---- --- | ---- --- | ---- --- | ---- --- | 1830 499 |
| | SCREW, No. 8-15 x 3/4" | 2 | ---- --- | ---- --- | ---- --- | ---- --- | 162 402 |
| | Upper Right | 1 | ---- --- | ---- --- | ---- --- | ---- --- | 2085 774 |
| | Left | 1 | ---- --- | ---- --- | ---- --- | ---- --- | 2085 775 |
| | SCREW, No. 8-15 x 1" | 6 | ---- --- | ---- --- | ---- --- | ---- --- | 148 095 |
| | GROMMET | 2 | ---- --- | ---- --- | ---- --- | ---- --- | 2085 862 |
| | 4 D., Y1-M, Front Door Upper Right | 1 | ---- --- | ---- --- | ---- --- | ---- --- | 2085 756 |
| | Left | 1 | ---- --- | ---- --- | ---- --- | ---- --- | 2085 757 |
| | BEZEL and PLATE | 2 | ---- --- | ---- --- | ---- --- | ---- --- | 2085 854 |
| | DOOR/PULL, Arm Rest Right | 1 | ---- --- | ---- --- | ---- --- | ---- --- | 2085 660 |
| | Left | 1 | ---- --- | ---- --- | ---- --- | ---- --- | 2085 661 |
| | SCREW, No. 8-15 x 1" | 6 | ---- --- | ---- --- | ---- --- | ---- --- | 148 095 |
| | GROMMET | 2 | ---- --- | ---- --- | ---- --- | ---- --- | 2085 862 |
| | Lower Right | 1 | ---- --- | ---- --- | ---- --- | ---- --- | 2085 784 |
| | Left | 1 | ---- --- | ---- --- | ---- --- | ---- --- | 2085 785 |
| | STOP Upper and Lower Rear | 4 | ---- --- | ---- --- | ---- --- | ---- --- | 2080 982 |
| | Rear Door, CAP Rear Upper Right | 1 | ---- --- | ---- --- | ---- --- | ---- --- | 1830 498 |
| | Left | 1 | ---- --- | ---- --- | ---- --- | ---- --- | 1830 499 |
| | Upper Right | 1 | ---- --- | ---- --- | ---- --- | ---- --- | 2085 774 |
| | Left | 1 | ---- --- | ---- --- | ---- --- | ---- --- | 2085 775 |
| | BEZEL and PLATE | 2 | ---- --- | ---- --- | ---- --- | ---- --- | 2085 854 |
| | Sp. Cl. Cp., Y1-L Front Upper Right | 1 | ---- --- | ---- --- | ---- --- | ---- --- | 2080 052 |
| | Left | 1 | ---- --- | ---- --- | ---- --- | ---- --- | 2080 053 |
| | RIVET, 1/8 x 7/32" | 8 | ---- --- | ---- --- | ---- --- | ---- --- | 136 028 |
| | SCREW, No. 8-15 x 5/8" | 2 | ---- --- | ---- --- | ---- --- | ---- --- | 145 417 |
| | Upper Right | 1 | ---- --- | ---- --- | ---- --- | ---- --- | 2085 758 |
| | Left | 1 | ---- --- | ---- --- | ---- --- | ---- --- | 2085 759 |
| | DOOR/PULL, Arm Rest Right | 1 | ---- --- | ---- --- | ---- --- | ---- --- | 2085 660 |
| | Left | 1 | ---- --- | ---- --- | ---- --- | ---- --- | 2085 661 |
| | SCREW, No. 8-15 x 1" | 6 | ---- --- | ---- --- | ---- --- | ---- --- | 148 095 |
| | GROMMET | 2 | ---- --- | ---- --- | ---- --- | ---- --- | 2085 862 |
| | Sp. Cl. Cp., Cv. Cp., Y1-M Upper Right | 1 | ---- --- | ---- --- | ---- --- | ---- --- | 2085 758 |
| | Left | 1 | ---- --- | ---- --- | ---- --- | ---- --- | 2085 759 |
| | BEZEL and PLATE | 2 | ---- --- | ---- --- | ---- --- | ---- --- | 2085 854 |
| | DOOR/PULL, Arm Rest Right | 1 | ---- --- | ---- --- | ---- --- | ---- --- | 2085 660 |
| | Left | 1 | ---- --- | ---- --- | ---- --- | ---- --- | 2085 661 |



MyMopar.com

## 23-26-0 TRIM FINISH MOULDINGS-Cont'd

| CODE | REMARKS | PER CAR | PLYMOUTH | DODGE | DESOTO | CHRYSLER | IMPERIAL |
|---|---|---|---|---|---|---|---|
| 23-26-23 | MOULDING - Cont'd | | | | | | |
| | SCREW, No. 8-15 x 1" | 6 | ---- --- | ---- --- | ---- --- | ---- --- | 148 095 |
| | GROMMET | 2 | ---- --- | ---- --- | ---- --- | ---- --- | 2085 862 |
| | Lower | 2 | ---- --- | ---- --- | ---- --- | ---- --- | 2085 792 |
| | 4D., Sp. 4 D., Front Door Upper Right | 1 | ---- --- | ---- --- | ---- --- | ---- --- | 2085 756 |
| | Left | 1 | ---- --- | ---- --- | ---- --- | ---- --- | 2085 757 |
| | 4 D., Sp. 4 D., Y1-M, Y1-H, Front Door Lower Right | 1 | ---- --- | ---- --- | ---- --- | ---- --- | 2085 784 |
| | Left | 1 | ---- --- | ---- --- | ---- --- | ---- --- | 2085 785 |
| | Sp. Cl. Cp., Cv. Cp., 4D., Sp. 4D, Y1-M, Front Door, BEZEL and Finish PLATE | 2 | ---- --- | ---- --- | ---- --- | ---- --- | 2085 854 |
| | Sp. Cl. Cp., Cv. Cp., 4 D., Sp. 4D., Y1-M, Y1-H, Front Door BEZEL | 2 | ---- --- | ---- --- | ---- --- | ---- --- | 2085 856 |
| | 4D., Sp. 4 D., Y1-H, Front Door BEZEL and Finish PLATE Right | 1 | ---- --- | ---- --- | ---- --- | ---- --- | 2085 850 |
| | Left | 1 | ---- --- | ---- --- | ---- --- | ---- --- | 2085 851 |
| | 4 D., Sp. 4 D., Rear Door Upper Right | 1 | ---- --- | ---- --- | ---- --- | ---- --- | 2085 774 |
| | Left | 1 | ---- --- | ---- --- | ---- --- | ---- --- | 2085 775 |
| | 4D., Sp. 4 D., Y1-M, Y1-H, Rear Door Lower | 2 | ---- --- | ---- --- | ---- --- | ---- --- | 2085 788 |
| | 4D., Sp. 4D., Y1-M, Rear Door BEZEL and Finish PLATE | 2 | ---- --- | ---- --- | ---- --- | ---- --- | 2085 854 |
| | 4D., Sp. 4D., Y1-M, Y1-H, Front Door BEZEL | 2 | ---- --- | ---- --- | ---- --- | ---- --- | 2085 856 |
| | 4D., Sp. 4D., Y1-H, Rear Door BEZEL and Finish PLATE Right | 1 | ---- --- | ---- --- | ---- --- | ---- --- | 2085 850 |
| | Left | 1 | ---- --- | ---- --- | ---- --- | ---- --- | 2085 851 |
| 23-26-34 | MOULDING, Front Seat Back Trim | | | | | | |
| | 4D., Sp. 4D., Y1-M, Y1-H, w/o Swivel Seat | 1 | ---- --- | ---- --- | ---- --- | ---- --- | 2086 362 |
| | Sp. Cl. Cp., Cv. Cp., Y1-M, w/o Swivel Seat Rt. | 1 | ---- --- | ---- --- | ---- --- | ---- --- | *2086 360 |
| | Lt. | 1 | ---- --- | ---- --- | ---- --- | ---- --- | *1900 762 |
| 23-26-41 | MOULDING, Roof Side Rail Inside Finish | | | | | | |
| | Sp. 4 D., P1-H, P2-H, D3, D4, Stainless Steel Right | 1 | 1964 280 | 1964 280 | ---- --- | ---- --- | ---- --- |
| | Left | 1 | 1964 281 | 1964 281 | ---- --- | ---- --- | ---- --- |
| | Sp. 4 D., D1, D2, S1, C1, Prime Right | 1 | ---- --- | 1882 946 | 1882 946 | 1882 946 | ---- --- |
| | Left | 1 | ---- --- | 1882 947 | 1882 947 | 1882 947 | ---- --- |
| | SCREW | 10 | ---- --- | 9413 273 | 9413 273 | 9413 273 | ---- --- |
| | Sp. 4 D., D2-H, C3, w/Custom Trim Stainless Steel Right | 1 | ---- --- | 1954 862 | 1954 862 | 1954 862 | ---- --- |
| | Left | 1 | ---- --- | 1954 863 | 1954 863 | 1954 863 | ---- --- |
| | Sp. Cl. Cp., P1-M, P2-M, D1, D3-M, D4-M, Prime Right | 1 | 1882 950 | 1882 950 | ---- --- | ---- --- | ---- --- |
| | Left | 1 | 1882 951 | 1882 951 | ---- --- | ---- --- | ---- --- |
| | Sp. Cl. Cp., P1-H, P2-H, D2-H, D3-H, D4-H, Stainless Steel Right | 1 | 1954 930 | 1954 930 | ---- --- | ---- --- | ---- --- |
| | Left | 1 | 1954 931 | 1954 931 | ---- --- | ---- --- | ---- --- |
| | Sp. Cl. Cp., Prime Right | 1 | ---- --- | ---- --- | 1839 936 | 1839 936 | ---- --- |
| | Left | 1 | ---- --- | ---- --- | 1839 937 | 1839 937 | ---- --- |
| | Sp. Cl. Cp., C2, C3, Stainless Steel Right | 1 | ---- --- | ---- --- | 2086 058 | 2086 058 | ---- --- |
| | Left | 1 | ---- --- | ---- --- | 2086 059 | 2086 059 | ---- --- |
| | 2D. Sub., 4D. Sub., Prime Right | 1 | 1902 308 | 1902 308 | ---- --- | ---- --- | ---- --- |
| | Left | 1 | 1902 309 | 1902 309 | ---- --- | ---- --- | ---- --- |
| | Sp. 4 D. Sub., D2, C1, Prime Right | 1 | ---- --- | 1882 946 | ---- --- | 1882 946 | ---- --- |
| | Left | 1 | ---- --- | 1882 947 | ---- --- | 1882 947 | ---- --- |
| | Sp. 4 D. Sub., D2, Stainless Steel Right | 1 | ---- --- | 1954 862 | ---- --- | ---- --- | ---- --- |
| | Left | 1 | ---- --- | 1954 863 | ---- --- | ---- --- | ---- --- |
| | Sp. 4D. Sub., C3 Right | 1 | ---- --- | ---- --- | ---- --- | 1954 862 | ---- --- |
| | Left | 1 | ---- --- | ---- --- | ---- --- | 1954 863 | ---- --- |
| | Sp. 4D., Chrome Front Right | 1 | ---- --- | ---- --- | ---- --- | ---- --- | 1901 978 |
| | Left | 1 | ---- --- | ---- --- | ---- --- | ---- --- | 1901 979 |
| | Rear Right | 1 | ---- --- | ---- --- | ---- --- | ---- --- | 1901 982 |
| | Left | 1 | ---- --- | ---- --- | ---- --- | ---- --- | 1901 983 |



MyMopar.com

| CODE | REMARKS | | PER CAR | PLYMOUTH | DODGE | DESOTO | CHRYSLER | IMPERIAL |
|---|---|---|---|---|---|---|---|---|
| **23-26-0 TRIM FINISH MOULDINGS-Cont'd** | | | | | | | | |
| 23-26-41 | MOULDING - Cont'd | | | | | | | |
| | Sp. Cl. Cp., Chrome | Front Right | 1 | ---- --- | ---- --- | ---- --- | ---- --- | 1901 980 |
| | | Left | 1 | ---- --- | ---- --- | ---- --- | ---- --- | 1901 981 |
| | | Rear Right | 1 | ---- --- | ---- --- | ---- --- | ---- --- | 1901 984 |
| | | Left | 1 | ---- --- | ---- --- | ---- --- | ---- --- | 1901 985 |
| | EXTENSION, Roof Side Rail Inside Finish Moulding | | | | | | | |
| | 2 D. Sub., 4 D. Sub., Prime | Front Right | 1 | 1902 348 | 1902 348 | ---- --- | ---- --- | ---- --- |
| | | Left | 1 | 1902 349 | 1902 349 | ---- --- | ---- --- | ---- --- |
| | Sp. 4D., Sp. 4D. Sub., Sp. Cl. Cp., S1, Prime | | | | | | | |
| | Front | Right | 1 | *1952 880 | *1952 880 | *1952 880 | *1952 880 | ---- --- |
| | | Left | 1 | 1952 881 | 1952 881 | 1952 881 | 1952 881 | ---- --- |
| | Sp. Cl. Cp., Prime | Rear Right | 1 | 1954 644 | 1954 644 | ---- --- | ---- --- | ---- --- |
| | | Left | 1 | 1954 645 | 1954 645 | ---- --- | ---- --- | ---- --- |
| | Sp. Cl. Cp., Stainless Steel | Rear Right | 1 | 1963 640 | 1963 640 | ---- --- | ---- --- | ---- --- |
| | | Left | 1 | 1963 641 | 1963 641 | ---- --- | ---- --- | ---- --- |
| | Sp. 4 D., Sp. Cl. Cp., D2-H, D3-H, D4-H, C3, Sp. 4D. Sub., w/Custom Trim, Stainless Steel | | | | | | | |
| | | Front Right | 1 | *1952 896 | *1952 896 | *1952 896 | *1952 896 | ---- --- |
| | | Left | 1 | 1952 897 | 1952 897 | 1952 897 | 1952 897 | ---- --- |
| 23-26-42 | CAP, Roof Rail Inside Finish Extension Moulding, Sp. Cl. Cp. | Right | 1 | 2163 468 | ---- --- | ---- --- | ---- --- | ---- --- |
| | | Left | 1 | 2163 469 | ---- --- | ---- --- | ---- --- | ---- --- |
| 23-26-44 | SUPPORT, Roof Rail Inside Finish Moulding | | | | | | | |
| | Sp. 4D., Sp. 4 D. Sub., D1, D2 | Right | 1 | 1869 564 | 1869 564 | 1869 564 | 1869 564 | ---- --- |
| | | Left | 1 | 1869 565 | 1869 565 | 1869 565 | 1869 565 | ---- --- |
| | Sp. 4 D., D3, D4 | Right | 1 | *1869 860 | *1869 860 | ---- --- | ---- --- | ---- --- |
| | | Left | 1 | *1869 861 | *1869 861 | ---- --- | ---- --- | ---- --- |
| | Sp. Cl. Cp. | Right | 1 | 1869 858 | 1869 858 | 1878 440 | 1878 440 | ---- --- |
| | | Left | 1 | 1869 859 | 1869 859 | 1878 441 | 1878 441 | ---- --- |
| 23-26-45 | MOULDING, Front Seat Side Shield | | | | | | | |
| | 4D., Sp. 4D., Y1-M, Y1-H, w/o Swivel Seats | Right | 1 | ---- --- | ---- --- | ---- --- | ---- --- | 2080 382 |
| | | Left | 1 | ---- --- | ---- --- | ---- --- | ---- --- | 2080 383 |
| | Sp. Cl. Cp., Cv. Cp., Y1-M, w/o Swivel Seats | | | | | | | |
| | | Upper Right | 1 | ---- --- | ---- --- | ---- --- | ---- --- | 2080 384 |
| | | Left | 1 | ---- --- | ---- --- | ---- --- | ---- --- | 2080 385 |
| | | Lower Right | 1 | ---- --- | ---- --- | ---- --- | ---- --- | 2080 386 |
| | | Left | 1 | ---- --- | ---- --- | ---- --- | ---- --- | 2080 387 |
| 23-26-46 | FINISH PLATE, Rear Quarter Trim Panel | | | | | | | |
| | Sp. Cl. Cp., C3-H, | Right | 1 | ---- --- | ---- --- | ---- --- | ⊟2085 590 | ---- --- |
| | | Left | 1 | ---- --- | ---- --- | ---- --- | ⊟2085 591 | ---- --- |
| | Cv. Cp., C3-H, | Right | 1 | ---- --- | ---- --- | ---- --- | ⊟2085 602 | ---- --- |
| | | Left | 1 | ---- --- | ---- --- | ---- --- | ⊟2085 603 | ---- --- |
| 23-26-47 | MOULDING, Rear Quarter Trim Panel Finish | | | | | | | |
| | Cl. Sed., Sp. Cl. Cp., P1-M, P2-M | | 2 | 1977 406 | ---- --- | ---- --- | ---- --- | ---- --- |
| | Sp. 4 D. Sub., Wheelhouse | Front Upper Right | 1 | ---- --- | 2080 644 | ---- --- | 2080 644 | ---- --- |
| | | Left | 1 | ---- --- | 2080 645 | ---- --- | 2080 645 | ---- --- |
| | 4D., Sub., Wheelhouse | Front Upper Right | 1 | 2080 440 | 2080 440 | ---- --- | ---- --- | ---- --- |
| | | Left | 1 | 2080 441 | 2080 441 | ---- --- | ---- --- | ---- --- |
| | 4D. Sub., Sp. 4D. Sub., Wheelhouse | Front Lower Right | 1 | 2080 438 | 2080 438 | ---- --- | 2080 438 | ---- --- |
| | | Left | 1 | 2080 439 | 2080 439 | ---- --- | 2080 439 | ---- --- |
| | 2 D. Sub., Wheelhouse | Front Right | 1 | 2080 544 | ---- --- | ---- --- | ---- --- | ---- --- |
| | | Left | 1 | 2080 545 | ---- --- | ---- --- | ---- --- | ---- --- |
| | Sp. Cl. Cp., D1, D2 | Upper | 2 | ---- --- | 1974 765 | ---- --- | ---- --- | ---- --- |
| | | Lower | 2 | ---- --- | 1974 766 | ---- --- | ---- --- | ---- --- |
| | Sp. Cl. Cp., D3-M, D4-M | Upper | 2 | ---- --- | 1974 095 | ---- --- | ---- --- | ---- --- |
| | | Lower | 2 | ---- --- | 1974 096 | ---- --- | ---- --- | ---- --- |
| | Sp. Cl. Cp., D1, D2, Center | Upper | 2 | ---- --- | 2192 128 | ---- --- | ---- --- | ---- --- |
| | | Lower | 2 | ---- --- | 2192 129 | ---- --- | ---- --- | ---- --- |
| | Cl. Sed., D3-M, D4-M | Upper | 2 | ---- --- | 1974 093 | ---- --- | ---- --- | ---- --- |
| | | Lower | 2 | ---- --- | 1974 094 | ---- --- | ---- --- | ---- --- |
| | Cv. Cp., D2-H | Upper Right | 1 | ---- --- | 1974 768 | ---- --- | ---- --- | ---- --- |
| | | Left | 1 | ---- --- | 1974 769 | ---- --- | ---- --- | ---- --- |
| | | Lower Right | 1 | ---- --- | 1974 770 | ---- --- | ---- --- | ---- --- |
| | | Left | 1 | ---- --- | 1974 771 | ---- --- | ---- --- | ---- --- |


MyMopar.com

| CODE | REMARKS | | PER CAR | PLYMOUTH | DODGE | DESOTO | CHRYSLER | IMPERIAL |
|---|---|---|---|---|---|---|---|---|
| **23-26-0 TRIM FINISH MOULDINGS - Cont'd** | | | | | | | | |
| 23-26-47 | MOULDING - Cont'd | | | | | | | |
| | Cv. Cp., D2, Center | Upper | 2 | ---- --- | 2192 130 | ---- --- | ---- --- | ---- --- |
| | | Lower | 2 | ---- --- | 2192 131 | ---- --- | ---- --- | ---- --- |
| | Cv. Cp., D2 | Upper Right | 1 | ---- --- | 1974 768 | ---- --- | ---- --- | ---- --- |
| | | Left | 1 | ---- --- | 1974 769 | ---- --- | ---- --- | ---- --- |
| | Sp. Cl. Cp., S1 | Upper | 2 | ---- --- | ---- --- | 2085 493 | ---- --- | ---- --- |
| | Sp. Cl. Cp., S3 | Lower | 2 | ---- --- | ---- --- | 2085 108 | ---- --- | ---- --- |
| | Sp. Cl. Cp., C1, C2 | Rear Lower | 2 | ---- --- | ---- --- | ---- --- | 2085 446 | ---- --- |
| | Sp. Cl. Cp., Cv. Cp., C3 | Lower | 2 | ---- --- | ---- --- | ---- --- | 1647 087 | ---- --- |
| | Sp. Cl. Cp., C3-300 | | 2 | ---- --- | ---- --- | ---- --- | 1876 338 | ---- --- |
| | 4 D., Sp. 4 D. | Right | 1 | ---- --- | ---- --- | ---- --- | ---- --- | 2085 844 |
| | | Left | 1 | ---- --- | ---- --- | ---- --- | ---- --- | 2085 845 |
| | Sp. Cl. Cp. | | 2 | ---- --- | ---- --- | ---- --- | ---- --- | 2085 778 |
| | Cv. Cp., C1 | Upper | 2 | ---- --- | ---- --- | ---- --- | 2085 958 | ---- --- |
| | Cv. Cp., C3 | Upper Right | 1 | ---- --- | ---- --- | ---- --- | 2085 478 | ---- --- |
| | | Left | 1 | ---- --- | ---- --- | ---- --- | 2085 479 | ---- --- |
| | Cv. Cp., C1 | | 2 | ---- --- | ---- --- | ---- --- | 2085 445 | ---- --- |
| | Cv. Cp., C3 | Lower | 2 | ---- --- | ---- --- | ---- --- | 2086 177 | ---- --- |
| | Sp. Cl. Cp., C3-300 | Upper | 2 | ---- --- | ---- --- | ---- --- | 2086 338 | ---- --- |
| | Sp. Cl. Cp., C1, C2 | Upper Right | 1 | ---- --- | ---- --- | ---- --- | 2085 234 | ---- --- |
| | | Left | 1 | ---- --- | ---- --- | ---- --- | 2085 235 | ---- --- |
| | Sp. Cl. Cp., C3 | Upper Right | 1 | ---- --- | ---- --- | ---- --- | 2085 480 | ---- --- |
| | | Left | 1 | ---- --- | ---- --- | ---- --- | 2085 481 | ---- --- |
| | Cv. Cp. | | 2 | ---- --- | ---- --- | ---- --- | ---- --- | 2085 846 |
| 23-26-55 | MOULDING, Center Pillar Cover Protector | | | | | | | |
| | Sp. 4 D., Sp. 4 D. Sub., w/Swivel Seats | Right | 1 | ---- --- | 2161 070 | 2161 070 | 2161 070 | ---- --- |
| | | Left | 1 | ---- --- | 2161 071 | 2161 071 | 2161 071 | ---- --- |
| 23-26-58 | CAP, Center Pillar Finish | | | | | | | |
| | Sp. 4 D. | Right | 1 | ---- --- | ---- --- | ---- --- | ---- --- | *1902 392 |
| | | Left | 1 | ---- --- | ---- --- | ---- --- | ---- --- | *1902 393 |
| 23-26-59 | COVER, Center Pillar Inner at Belt | | | | | | | |
| | 4 D. | Right | 1 | ---- --- | ---- --- | ---- --- | ---- --- | 2085 458 |
| | | Left | 1 | ---- --- | ---- --- | ---- --- | ---- --- | 2085 459 |
| 23-26-62 | CAP, Door Trim Panel Finish | | | | | | | |
| | Sp. 4 D., Sp. 4 D. Sub., PC3 | | | | | | | |
| | | Rear Door Rear, Right | 1 | ---- --- | ---- --- | ---- --- | 1902 476 | 1830 498 |
| | | Left | 1 | ---- --- | ---- --- | ---- --- | 1902 477 | 1830 499 |
| 23-26-63 | CAP, Quarter Trim Panel Finish | | | | | | | |
| | Cl. Sed., P1-L, P2-L, P1-M, P2-M, Trim Code | | | | | | | |
| | 349, Moulding End | | 4 | 1694 182 | ---- --- | ---- --- | ---- --- | ---- --- |
| 23-26-80 | STAR, Front Door Trim Panel Metal, | | | | | | | |
| | Sp. Cl. Cp., 4 D., Sp. 4 D., S3 | | 2 | ---- --- | ---- --- | 2085 919 | ---- --- | ---- --- |
| 23-26-87 | MOULDING, Floor Tunnel Console Finish | | | | | | | |
| | C3-300 | Right | 1 | ---- --- | ---- --- | ---- --- | 2161 016 | ---- --- |
| | | Left | 1 | ---- --- | ---- --- | ---- --- | 2161 017 | ---- --- |
| | | Rear | 2 | ---- --- | ---- --- | ---- --- | 2161 018 | ---- --- |
| | | Rear Right | 1 | ---- --- | ---- --- | ---- --- | 2161 014 | ---- --- |
| | | Left | 1 | ---- --- | ---- --- | ---- --- | 2161 015 | ---- --- |
| | | Front Right | 1 | ---- --- | ---- --- | ---- --- | 2161 012 | ---- --- |
| | | Left | 1 | ---- --- | ---- --- | ---- --- | 2161 013 | ---- --- |
| 23-26-89 | COVER, Floor Tunnel Console Finish | | | | | | | |
| | Moulding Joint, C3-300 | | 2 | ---- --- | ---- --- | ---- --- | 2161 011 | ---- --- |
| **23-31-0 PADS, LINERS, INSULATORS, SEALS, ANTI-SQUEAK** | | | | | | | | |
| 23-31-6 | ANTI-SQUEAK, Wheelhouse Support to Side Rail Reinforcement Extension Brace, Sp. Cl. Cp. | | 2 | 1242 974 | 1242 974 | ---- --- | ---- --- | ---- --- |
| 23-31-33 | LINER, Dash | | 1 | 2089 893 | 2089 893 | 2089 893 | 2089 893 | 2085 865 |
| 23-31-36 | FASTENER, Dash Liner w/or w/o Heater and Air Conditioning | | ★ | 6008 109 | 6008 109 | 6008 109 | 6008 109 | 6008 109 |
| 23-31-53 | SEAL, Quarter Outside Panel Strainer, Cv. Cp. | | ★ | 1242 974 | ---- --- | ---- --- | ---- --- | ---- --- |
| 23-31-119 | PAD, Steering Column Finish to Floor w/Power Strg., w/Std. Trans. | | 1 | 2080 939 | 2080 939 | ---- --- | ---- --- | ---- --- |
| | D3, D4, S1, w/o Power Strg., w/Std. Trans. | | 1 | 2080 935 | 2080 935 | 2080 935 | ---- --- | ---- --- |
| | C1, w/o Power Strg., w/Auto. Trans. | | 1 | 2080 936 | 2080 936 | 2080 936 | 2080 936 | ---- --- |

★ Indicates use as required.
⊟ Indicates parts not listed in any previous parts book.
Dec. 9, 1960 Supersedes April 20, 1960.



Printed in U.S.A.
Prices and specifications subject to change without notice.
* Indicates change or addition.

MyMopar.com

| CODE | REMARKS | PER CAR | PLYMOUTH | DODGE | DESOTO | CHRYSLER | IMPERIAL |
|---|---|---|---|---|---|---|---|
| **23-31-0** | **PADS, LINERS, INSULATORS, SEALS, ANTI-SQUEAK - Cont'd** | | | | | | |
| 23-31-119 | PAD - Cont'd | | | | | | |
| | C1, w/Power Strg., w/Auto. Trans. | 1 | 2080 938 | 2080 938 | 2080 938 | 2080 938 | ---- --- |
| | C2, C3 | 1 | ---- --- | ---- --- | ---- --- | 2080 937 | 2080 937 |
| | w/Power Strg., w/Std. Trans., w/LINER | 1 | 2161 723 | 2161 723 | ---- --- | ---- --- | ---- --- |
| | S1, w/o Power Strg., w/Std., Trans. | 1 | 2161 565 | 2161 565 | 2161 565 | ---- --- | ---- --- |
| | S1, w/o Power Strg., w/Std. Trans., w/LINER | 1 | 2161 724 | 2161 724 | 2161 724 | ---- --- | ---- --- |
| 23-31-124 | SEAL, Steering Column to Floor | | | | | | |
| | D1, D2, S1, w/o Auto. Trans., w/o Power Strg. | 1 | ---- --- | 2080 764 | 2080 764 | ---- --- | ---- --- |
| | C1, w/Auto. Trans., w/o Power Strg., w/Strg. Gear Coupling | 1 | 2080 766 | 2080 766 | 2080 766 | 2080 766 | ---- --- |
| | D3, D4, w/Std. Trans., w/Power Strg. | 1 | 2080 769 | 2080 769 | ---- --- | ---- --- | ---- --- |
| | D3, D4, w/Auto. Trans., w/o Power Strg., w/o Strg. Gear Coupling | 1 | 2080 765 | 2080 765 | ---- --- | ---- --- | ---- --- |
| | w/o Auto. Trans., w/o Power Strg. | 1 | 2080 763 | 2080 763 | ---- --- | ---- --- | ---- --- |
| | C1, w/Auto. Trans., w/Power Strg. | 1 | 2080 768 | 2080 768 | 2080 768 | 2080 768 | ---- --- |
| | C2, C3, w/Auto. Trans., w/Power Strg. | 1 | ---- --- | ---- --- | ---- --- | 2080 767 | ---- --- |
| | All | 1 | ---- --- | ---- --- | ---- --- | ---- --- | 1830 452 |
| 23-31-125 | SILENCER, Steering Column Opening Cover | 1 | ---- --- | ---- --- | ---- --- | ---- --- | 1767 102 |
| 23-31-128 | SCREW and WASHER, Steering Column Seal to Floor | 5 | ---- --- | ---- --- | ---- --- | ---- --- | 6000 160 |
| 23-31-145 | WEATHERSTRIP, Cowl to Hood | 1 | ---- --- | ---- --- | ---- --- | ---- --- | 1751 182 |
| 23-31-150 | SEAL, Rear Floor Pan Extension to Quarter Panel | | | | | | |
| | Sp. Cl. Cp., 4 D., Sp. 4 D., Cv. Cp. | 2 | ---- --- | ---- --- | ---- --- | ---- --- | 1752 016 |
| 23-31-205 | SILENCER, Roof Panel | | | | | | |
| | 1/2" x 25 1/2" x 67" | ★ | 1774 621 | 1774 621 | 1774 621 | 1774 621 | ---- --- |
| | D3, D4, 1/8" x 25 1/2" x 67" | ★ | 1774 625 | 1774 625 | ---- --- | ---- --- | ---- --- |
| **23-32-0** | **PANS, PLUGS AND BODY BUMPERS** | | | | | | |
| 23-32-14 | SCREW and WASHER, Floor Pan Sub., w/Tire Well Lock, Latch Striker | 2 | 6000 160 | 6000 160 | ---- --- | 6000 160 | ---- --- |
| 23-32-15 | PLUG or BUTTON, Floor Pan | | | | | | |
| | 1/2" Hole | ★ | *1810 273 | ---- --- | ---- --- | ---- --- | 2093 945 |
| | 1" Hole | ★ | 2094 985 | 2094 985 | 2094 985 | 2094 985 | ---- --- |
| | 2 1/2" Hole | ★ | 2094 244 | 2094 244 | 2094 244 | 2094 244 | 1869 582 |
| | 1 3/4" Hole | ★ | 2094 595 | 2094 595 | ---- --- | ---- --- | ---- --- |
| | 7/8" Hole | ★ | 2094 631 | 2094 631 | 2094 631 | 2094 631 | ---- --- |
| | 1/2" Hole | ★ | 2094 984 | 2094 984 | 2094 984 | 2094 984 | ---- --- |
| 23-32-17 | CROSSMEMBER, Front Floor Pan Rear | 1 | ---- --- | ---- --- | ---- --- | ---- --- | 1861 264 |
| | CROSSMEMBER and REINFORCEMENT, Rear Floor Pan Rear, except Sub. | 1 | *1960 180 | *1960 180 | *1960 180 | *1960 180 | ---- --- |
| 23-32-34 | SPACER, Fuel Tank to Floor Pan Reinforcement, except Sub. | 2 | 2123 639 | 2123 639 | 2123 639 | 2123 639 | ---- --- |
| 23-32-36 | COVER, Fuel Gauge Inspection Hole, Sub. | 1 | 1846 668 | 1846 668 | ---- --- | 1846 668 | ---- --- |
| 23-32-46 | PANEL, Second Seat Back to Rear Floor Pan Cover, Sub. | 1 | 1878 636 | 1878 636 | ---- --- | 1878 636 | ---- --- |
| 23-32-48 | PAN, Rear Floor, except Sub. | 1 | 1861 002 | 1861 002 | 1861 002 | 1861 002 | ---- --- |
| | Sub., 2 Seater, Center, Front | 1 | 1861 041 | 1861 041 | ---- --- | 1861 041 | ---- --- |
| | Sub., Spare Tire Compartment | 1 | 1973 211 | 1973 211 | ---- --- | 1973 211 | ---- --- |
| | 4 D. Sub., Sp. 4 D. Sub., 3 Seater | 1 | 1973 226 | 1973 226 | ---- --- | ---- --- | ---- --- |
| | All | 1 | ---- --- | ---- --- | ---- --- | ---- --- | 1877 346 |
| | Sp. Cl. Cp., Cv. Cp., 4 D., Sp. 4 D., D1, D2 | 1 | ---- --- | 1883 347 | ---- --- | ---- --- | ---- --- |
| | 4 D. Sub., Sp. 4 D. Sub., D2, C1, 122" W.B. | 1 | ---- --- | 1973 110 | ---- --- | 1973 110 | ---- --- |
| | 2 D. Sub., 122" W.B. | 1 | 1973 110 | ---- --- | ---- --- | ---- --- | ---- --- |
| | Except Sub., D3, D4, 118" W/B Complete | 1 | *1882 734 | ⊟1973 149 | ---- --- | ---- --- | ---- --- |
| 23-32-49 | EXTENSION, Rear Floor Pan Side | | | | | | |
| | Sub. Right | 1 | 1960 166 | ---- --- | ---- --- | ---- --- | ---- --- |
| | Left | 1 | 1960 167 | ---- --- | ---- --- | ---- --- | ---- --- |
| | D3, D4, except Sub. Right | 1 | 1861 010 | 1961 506 | ---- --- | ---- --- | 1877 762 |
| | Left | 1 | 1861 011 | 1961 507 | ---- --- | ---- --- | 1877 763 |
| | Sp. 4 D. Sub. Right | 1 | ---- --- | ---- --- | ---- --- | 1960 080 | ---- --- |
| | Left | 1 | ---- --- | ---- --- | ---- --- | 1960 081 | ---- --- |

★ Indicates use as required.
⊟ Indicates parts not listed in any previous parts book.
* Indicates change or addition.



Printed in U.S.A.
Prices and specifications subject to change without notice.
Dec. 9, 1960 Supersedes April 20, 1960.

MyMopar.com

## 23-32-0 PANS, PLUGS AND BODY BUMPERS-Cont'd

| CODE | REMARKS | | PER CAR | PLYMOUTH | DODGE | DESOTO | CHRYSLER | IMPERIAL |
|---|---|---|---|---|---|---|---|---|
| 23-32-49 | EXTENSION - Cont'd | | | | | | | |
| | Cl. Sed., Sp. Cl. Cp., Cv. Cp., 4 D., Sp. 4 D., D1, D2 | Right | 1 | ---- --- | 1861 048 | 1861 048 | 1861 048 | ---- --- |
| | | Left | 1 | ---- --- | 1861 049 | 1861 049 | 1861 049 | ---- --- |
| | PAN, Rear Floor Side, Sub. | Right | 1 | 1877 830 | 1877 830 | ---- --- | 1877 830 | ---- --- |
| | | Left | 1 | 1877 831 | 1877 831 | ---- --- | 1877 831 | ---- --- |
| 23-32-51 | BUMPER, Rear Compartment Cover Support on Wheel House, Sub., 2 Seater | | 2 | 1380 060 | 1380 060 | ---- --- | 1380 060 | ---- --- |
| | BUMPER, Tailgate Opening Sill Panel to Rear Floor Pan Cover Sub., 2 Seater | | 2 | 1380 060 | 1380 060 | ---- --- | 1380 060 | ---- --- |
| 23-32-54 | EXTENSION, Deck Opening Lower Panel to Floor Pan, except Sub. | Center | 1 | 1954 279 | ---- --- | ---- --- | ---- --- | ---- --- |
| 23-32-56 | COVER, Rear Floor Pan Tire Well Sub., 2 Seater, w/Prop ROD and HINGES | | 1 | 1878 889 | 1878 889 | ---- --- | 1878 889 | ---- --- |
| | FILLER, Rear Floor Pan Extension, Sp. Cl. Cp., Cv. Cp., 4 D., Sp. 4 D. | Right | 1 | ---- --- | ---- --- | 1878 586 | 1878 586 | ---- --- |
| | | Left | 1 | ---- --- | ---- --- | 1878 587 | 1878 587 | ---- --- |
| 23-32-58 | STRIKER, Rear Floor Pan Cover Lock Latch Sub., w/Tire Well Lock | | 1 | 1960 476 | 1960 476 | ---- --- | 1960 476 | ---- --- |
| 23-32-64 | LATCH, Rear Floor Pan Cover Lock Sub., w/Tire Well Lock | | 1 | 1866 685 | 1866 685 | ---- --- | 1866 685 | ---- --- |
| 23-32-65 | HINGE, Rear Floor Pan Compartment or Tire Well Cover Sub., 2 Seater, Body Half | Right | 1 | 1878 170 | 1878 170 | ---- --- | 1878 170 | ---- --- |
| | | Left | 1 | 1878 171 | 1878 171 | ---- --- | 1878 171 | ---- --- |
| | WASHER | | 4 | 128 051 | 128 051 | ---- --- | 128 051 | ---- --- |
| | NUT | | 4 | 190 872 | 190 872 | ---- --- | 190 872 | ---- --- |
| 23-32-66 | SPRING, Rear Floor Pan Cover Lock Latch Sub., w/Tire Well Lock | | 1 | 1866 682 | 1866 682 | ---- --- | 1866 682 | ---- --- |
| 23-32-67 | SUPPORT, Rear Compartment Cover on Wheelhouse, Sub., 2 Seater | | 2 | 1878 014 | 1878 014 | ---- --- | 1878 014 | ---- --- |
| | SCREW and WASHER | | 8 | 1244 818 | 1244 818 | ---- --- | 1244 818 | ---- --- |
| 23-32-68 | PLUG, Door Access Hole 4 D., Front Door, Upper Extension Bracket, | Upper and Lower | 4 | ---- --- | ---- --- | ---- --- | ---- --- | 1751 764 |
| | | Center Rear | 2 | ---- --- | ---- --- | ---- --- | ---- --- | 1751 762 |
| | Rear Door, Upper Extension Bracket | Lower | 2 | ---- --- | ---- --- | ---- --- | ---- --- | 1751 764 |
| | | Center, Front and Rear | 4 | ---- --- | ---- --- | ---- --- | ---- --- | 1751 762 |
| | PLUG, Tailgate Lock Adjusting Access Hole Button Sub. | | 2 | 2094 129 | 2094 129 | ---- --- | 2094 129 | ---- --- |
| 23-32-73 | PIN, Rear Floor Pan Cover Hinge Sub., 2 Seater | | 2 | 1960 627 | 1960 627 | ---- --- | 1960 627 | ---- --- |
| 23-32-75 | BRACKET, Rear Floor Pan Cover Lock Latch Sub., w/Tire Well Lock | | 1 | 1866 683 | 1866 683 | ---- --- | 1866 683 | ---- --- |
| 23-32-77 | BOLT, Rear Floor Pan Cover Lock Latch Bracket Sub., w/Tire Well Lock | | 2 | 1883 654 | 1883 654 | ---- --- | 1883 654 | ---- --- |
| | NUT | | 2 | 151 497 | 151 497 | ---- --- | 151 497 | ---- --- |
| 23-32-79 | BRACKET, Rear Floor Pan Cover Prop Rod Pivot, Sub., 2 Seater | | 1 | 1432 929 | 1432 929 | ---- --- | 1432 929 | ---- --- |
| | Sub., 2 Seater, w/RETAINER | | 1 | ---- --- | 1960 689 | ---- --- | ---- --- | ---- --- |
| 23-32-80 | HANDLE, Rear Floor Pan Cover Lift Sub., 2 Seater, | Prime | 1 | 1775 891 | 1775 891 | ---- --- | ---- --- | ---- --- |
| | 4 D. Sub., Sp. 4 D. Sub., 2 Seater, P1-M, P2-M, P1-H, P2-H, D2-H | Chrome | 1 | 1833 596 | 1833 596 | ---- --- | 1833 596 | ---- --- |
| | SCREW | | 2 | 155 113 | 155 113 | ---- --- | 155 113 | ---- --- |
| 23-32-82 | ESCUTCHEON, Rear Floor Pan Cover Lift Handle 2 D. Sub., 4 D. Sub., P1-L, P2-L, D1-L, D3-L, D4-L, 2 Seater, Prime | | 1 | 1775 814 | 1775 814 | ---- --- | 1775 814 | ---- --- |
| | 4 D. Sub., Sp. 4 D. Sub., 2 Seater, P1-M, P2-M, P1-H, P2-H, D2-H, D3-M, D4-M, Chrome | | 1 | 1833 597 | 1833 597 | ---- --- | 1833 597 | ---- --- |
| | L/WASHER | | 2 | 138 530 | 138 530 | ---- --- | 138 530 | ---- --- |
| | NUT | | 2 | 120 622 | 120 622 | ---- --- | 120 622 | ---- --- |
| | SCREW | | 2 | 156 771 | 156 771 | ---- --- | 156 771 | ---- --- |

★ Indicates use as required.
⊟ Indicates parts not listed in any previous parts book.
Dec. 9, 1960 Supersedes April 20, 1960.



Printed in U.S.A.
Prices and specifications subject to change without notice.
* Indicates change or addition.
MyMopar.com

## 23-33-0 INSTRUMENT PANEL

| CODE | REMARKS | PER CAR | PLYMOUTH | DODGE | DESOTO | CHRYSLER | IMPERIAL |
|---|---|---|---|---|---|---|---|
| 23-33-10 | BRACE, Instrument Panel to Pedal Bracket | 1 | ---- --- | ---- --- | ---- --- | 1901 802 | ---- --- |
| | BRACE, Instrument Panel Lower Reinforcement to Windshield Frame | 1 | 2080 679 | 2080 899 | 2080 899 | 2080 899 | ---- --- |
| | BRACE, Instrument Panel to Windshield Wiper Mounting Bracket | 1 | ---- --- | ---- --- | ---- --- | 2080 649 | ---- --- |
| | BRACE, Instrument Panel to Windshield Wiper Motor Mounting Bracket | 1 | ---- --- | ---- --- | ---- --- | ---- --- | ⊟2161 633 |
| 23-33-12 | COVER, Instrument Panel Radio Opening | 1 | 2080 965 | 1901 789 | ---- --- | 2080 008 | 1901 811 |
| | NUT | 2 | ---- --- | ---- --- | ---- --- | 120 622 | ---- --- |
| | w/BEZEL, w/Name DeSoto | 1 | ---- --- | ---- --- | 2080 993 | ---- --- | ---- --- |
| | Knob Hole | 2 | ---- --- | ---- --- | ---- --- | ---- --- | 2080 058 |
| | NUT | 2 | ---- --- | ---- --- | ---- --- | ---- --- | 151 497 |
| 23-33-20 | COVER, Instrument Panel Clock Opening PC1 | 1 | 1971 193 | 2080 889 | *2080 889 | 2161 721 | ---- --- |
| 23-33-26 | BEZEL, Instrument Panel Fresh Air Door Control, w/o Heater and Air Conditioner Prime | 1 | *1902 154 | 1839 737 | 1839 737 | ---- --- | ---- --- |
| | NOTE: w/HEATER see Part Type Code 1-48-70 | | | | | | |
| 23-33-37 | CUP WASHER, Instrument Panel Radio Speaker Mounting | 4 | ---- --- | 1902 173 | 1902 173 | ---- --- | ---- --- |
| 23-33-42 | GRILLE, Instrument Panel Radio Speaker All, Paint as Required | 1 | 2049 389 | ---- --- | ---- --- | ---- --- | ---- --- |
| | w/o Air Conditioning Prime | 1 | ---- --- | 1839 727 | 1839 727 | ---- --- | ---- --- |
| | Prime | 1 | ---- --- | ---- --- | ---- --- | 1839 688 | ---- --- |
| | GRILLE, Heater and Air Conditioning Air Outlet and Radio, D1, D2, D4, w/Air Conditioning | 1 | 2096 070 | 2096 070 | 2096 070 | ---- --- | ---- --- |
| | GRILLE, Instrument Panel Radio Speaker and Defroster Opening, w/Air Conditioning, Prime | 1 | ---- --- | ---- --- | ---- --- | ---- --- | 2080 338 |
| | w/o Air Conditioning, Prime | 1 | ---- --- | ---- --- | ---- --- | ---- --- | 2080 014 |
| 23-33-52 | HOUSING, Instrument Panel Clock | 1 | ---- --- | ---- --- | 2080 888 | ---- --- | ---- --- |
| 23-33-53 | BRACKET, Instrument Panel Clock Housing Right | 1 | ---- --- | 2080 916 | 2080 916 | ---- --- | ---- --- |
| 23-33-56 | FINISH PLATE, Instrument Panel Controls, w/o Radio | 1 | 1901 779 | ---- --- | ---- --- | ---- --- | ---- --- |
| | Controls, w/Radio | 1 | 2080 992 | ---- --- | ---- --- | ---- --- | ---- --- |
| | D1, D2, Controls Left | 1 | ---- --- | 1839 733 | 2161 001 | ---- --- | ---- --- |
| | Controls Right | 1 | ---- --- | ---- --- | ---- --- | 1839 698 | 1902 272 |
| | Left | 1 | ---- --- | ---- --- | ---- --- | 1839 699 | 1902 273 |
| 23-33-65 | COVER, Instrument Panel Defroster Opening | ★ | 2080 238 | 2080 238 | 2080 238 | 2080 238 | ---- --- |
| 23-33-84 | FASTENER, Instrument Panel Moulding w/Trim Pad | ★ | 6008 222 | 6008 222 | 6008 222 | 6008 222 | ---- --- |
| | Horizontal Moulding | 7 | 6008 189 | 6008 189 | 6008 189 | ---- --- | ---- --- |
| | CLIP, Instrument Panel Trim Pad Moulding Attaching | 5 | ---- --- | 6008 200 | 6008 200 | ---- --- | ---- --- |
| | CLIP, Instrument Panel Bezel Attaching | 2 | ---- --- | ---- --- | ---- --- | ---- --- | 6008 198 |
| 23-33-86 | MOULDING, Instrument Panel Horizontal | 1 | 2080 559 | ---- --- | ---- --- | ---- --- | ---- --- |
| | w/Trim Pad | 1 | ---- --- | 2080 470 | 2080 470 | ---- --- | ---- --- |
| | D3, D4 Horizontal | 1 | ---- --- | 2080 863 | ---- --- | ---- --- | ---- --- |
| | NUT | 7 | ---- --- | 445 153 | ---- --- | ---- --- | ---- --- |
| | Finish Plate Horizontal | 1 | ---- --- | 2080 202 | *2080 202 | ---- --- | ---- --- |
| | D1, D2, Finish Plate End Right | 1 | ---- --- | 1902 310 | 1902 310 | ---- --- | ---- --- |
| | Left | 1 | ---- --- | 1902 311 | 1902 311 | ---- --- | ---- --- |
| | NUT | 6 | ---- --- | 445 153 | ---- --- | ---- --- | ---- --- |
| | Speedometer Hood | 1 | ---- --- | ---- --- | 2080 893 | ---- --- | ---- --- |
| | Controls Finish Plate Right | 1 | ---- --- | ---- --- | ---- --- | 1839 694 | ---- --- |
| | Left | 1 | ---- --- | ---- --- | ---- --- | 1839 695 | ---- --- |
| | Instruments Hood Finish Plate and Moulding | 1 | ---- --- | ---- --- | ---- --- | 1902 220 | ---- --- |
| | Instrument Hood Trim Pad | 1 | ---- --- | ---- --- | ---- --- | 2080 362 | 2080 362 |



MyMopar.com

## 23-33-0 INSTRUMENT PANEL-Cont'd

| CODE | REMARKS | PER CAR | PLYMOUTH | DODGE | DESOTO | CHRYSLER | IMPERIAL |
|---|---|---|---|---|---|---|---|
| 23-33-94 | STUD, Instrument Panel Mounting | | | | | | |
| | Clock Housing | 2 | ---- --- | ---- --- | 2161 050 | ---- --- | ---- --- |
| | Radio Speaker Grille | 4 | ---- --- | ---- --- | 6008 039 | 6008 039 | 6008 012 |
| | Gear Selector and Left End Extension Attaching | 1 | ---- --- | ---- --- | ---- --- | ---- --- | 6008 030 |
| | Gear Selector to Instrument Housing Attaching | 2 | ---- --- | ---- --- | ---- --- | ---- --- | 6008 030 |
| 23-33-96 | NAME PLATE, Instrument Panel | | | | | | |
| | Imperial | 1 | ---- --- | ---- --- | ---- --- | ---- --- | 1839 778 |
| | LeBaron | 1 | ---- --- | ---- --- | ---- --- | ---- --- | 1902 315 |
| | Guard, Instrument Panel Ignition Key | 1 | ---- --- | 2080 960 | 2080 960 | ---- --- | ---- --- |
| | NUT | 1 | ---- --- | 445 153 | 445 153 | ---- --- | ---- --- |
| 23-33-109 | PANEL, Instrument | 1 | 2080 242 | 1901 783 | 1901 783 | 1901 799 | 1901 807 |
| | Sp. Cl. Cp., Cv. Cp., C3-300 | 1 | ---- --- | ---- --- | ---- --- | 2161 040 | ---- --- |
| | Extension, Instrument Panel End Right | 1 | ---- --- | ---- --- | ---- --- | ---- --- | 2080 940 |
| | Left | 1 | ---- --- | ---- --- | ---- --- | ---- --- | 2080 941 |
| 23-33-110 | SCREW and WASHER Instrument Panel | | | | | | |
| | S1, Lower Reinforcement to Pillar | 2 | 6008 017 | 6008 017 | 6008 017 | ---- --- | ---- --- |
| | Pillar Bracket to Pillar | 2 | ---- --- | ---- --- | ---- --- | ---- --- | 6008 245 |
| 23-33-111 | NUT, Instrument Panel Radio Opening | | | | | | |
| | Cover Attaching | 2 | 6006 034 | ---- --- | ---- --- | ---- --- | ---- --- |
| | Radio Opening Cover Attaching | 2 | 6006 034 | ---- --- | ---- --- | ---- --- | ---- --- |
| | Gear Selector Housing to Gear Selecting | | | | | | |
| | Bracket | 1 | ---- --- | 6013 082 | 6013 082 | ---- --- | ---- --- |
| | Instrument Panel to Speedometer Hood | ★ | ---- --- | 6013 114 | ---- --- | ---- --- | ---- --- |
| | Instrument Panel Finish Plate to End | | | | | | |
| | Extension Attaching | ★ | ---- --- | ---- --- | ---- --- | ---- --- | 6010 128 |
| 23-33-129 | HOOD, Instrument Panel Instrument | 1 | ---- --- | 1839 730 | ---- --- | ---- --- | ---- --- |
| | Upper | 1 | ---- --- | ---- --- | ---- --- | 1839 689 | ---- --- |
| | Lower | 1 | ---- --- | ---- --- | ---- --- | 1839 690 | ---- --- |
| | HOOD, Instrument Panel Speedometer | 1 | ---- --- | ---- --- | 2080 892 | ---- --- | ---- --- |
| 23-33-132 | CAP, Instrument Panel to Steering Column | | | | | | |
| | to Cluster | 1 | ---- --- | ---- --- | ---- --- | 1971 522 | ---- --- |
| | COVER, Instrument Panel Steering Column | | | | | | |
| | Opening | 1 | ---- --- | ---- --- | ---- --- | 1902 091 | ---- --- |
| | FILLER, Instrument Panel Steering Column | | | | | | |
| | Opening | 1 | ---- --- | 1902 399 | 1902 399 | ---- --- | ---- --- |
| | Paint as Required, Black, w/Std. Trans. | 1 | 2169 929 | ---- --- | ---- --- | ---- --- | ---- --- |
| | FILLER, Instrument Panel Steering Column | | | | | | |
| | Opening, S1, w/Std. Trans. Prime | 1 | 2080 279 | 2080 279 | 2080 279 | ---- --- | ---- --- |
| | BEZEL, Instrument Panel Instrument Cluster | | | | | | |
| | Lower Switch Mounting | 1 | ---- --- | ---- --- | ---- --- | 1971 519 | ---- --- |
| 23-33-135 | FINISH PLATE, Instrument Panel | | | | | | |
| | P1-M, P2-M, P1-H, P2-H, End Right | 1 | 1901 876 | ---- --- | 2161 000 | ---- --- | ---- --- |
| | Left | 1 | ---- --- | ---- --- | 2161 001 | ---- --- | ---- --- |
| | D1, D2, w/Control Openings Right | 1 | ---- --- | 1839 732 | ---- --- | ---- --- | ---- --- |
| | Left | 1 | ---- --- | 1839 733 | ---- --- | ---- --- | ---- --- |
| | Radio Control Opening, w/STUDS Right | 1 | ---- --- | ---- --- | ---- --- | ---- --- | 1902 272 |
| | Left | 1 | ---- --- | ---- --- | ---- --- | ---- --- | 1902 273 |
| 23-33-147 | COVER, Instrument Panel End Extension | 2 | ---- --- | ---- --- | ---- --- | ---- --- | 2080 942 |
| 23-33-153 | COVER, Instrument Panel Cigar Lighter | | | | | | |
| | Hole | 1 | 2080 048 | ---- --- | ---- --- | ---- --- | ---- --- |
| 23-33-213 | BRACKET, Instrument Panel Gear Selector | | | | | | |
| | Mounting | 1 | ---- --- | 1839 736 | 1839 736 | 1839 700 | 1839 765 |
| | BRACKET, Instrument Panel Gear Selector | | | | | | |
| | and Heater Control Support | 2 | 1901 859 | ---- --- | ---- --- | ---- --- | ---- --- |
| | SUPPORT, Instrument Panel Gear Selector | | | | | | |
| | w/Auto. Trans. | 1 | 1839 715 | ---- --- | ---- --- | ---- --- | ---- --- |
| | NUT | ★ | 120 614 | ---- --- | ---- --- | ---- --- | ---- --- |
| | GROMMET | 4 | 2161 522 | ---- --- | ---- --- | ---- --- | ---- --- |
| 23-33-216 | COVER, Instrument Panel Map Lamp Opening | 1 | ---- --- | 2080 152 | 2080 152 | ---- --- | ---- --- |
| 23-33-217 | HOUSING, Instrument Panel Gear Selector | 1 | ---- --- | ---- --- | ---- --- | 1839 691 | ---- --- |
| 23-33-220 | BEZEL, Instrument Panel Gear Selector | | | | | | |
| | S1 w/Std. Trans. | 1 | *1901 564 | 1902 329 | 1902 329 | ---- --- | ---- --- |
| | w/PowerFlite Trans. | 1 | *1901 581 | 1902 330 | 1902 330 | ---- --- | ---- --- |
| | w/Auto. 3 Speed Trans. | 1 | 1901 580 | 1902 331 | 1902 331 | ---- --- | 1839 769 |
| | BEZEL, Instrument Panel Gear Selector and | | | | | | |
| | Heater Control, w/Std. Trans. and w/o Heater | 1 | ---- --- | ---- --- | 1902 361 | ---- --- | ---- --- |
| | w/Auto. 3 Speed Trans. and w/o Heater | 1 | ---- --- | ---- --- | 1902 357 | ---- --- | ---- --- |



MyMopar.com

| CODE | REMARKS | PER CAR | PLYMOUTH | DODGE | DESOTO | CHRYSLER | IMPERIAL |
|---|---|---|---|---|---|---|---|
| **23-33-0 INSTRUMENT PANEL-Cont'd** | | | | | | | |
| 23-33-224 | NUT, Instrument Panel Dummy Knob Adapter Mounting | 2 | ---- --- | ---- --- | ---- --- | 1971 521 | ---- --- |
| 23-33-226 | KNOB, Dummy Switch Control | 2 | ---- --- | ---- --- | ---- --- | 1887 991 | ---- --- |
| 23-33-227 | PAD, Instrument Panel Gear Selector Housing | 1 | 1902 347 | 2080 457 | 2080 457 | ---- --- | ---- --- |
| | | 1 | ---- --- | ---- --- | ---- --- | 2080 388 | ---- --- |
| | Bezel | 1 | ---- --- | ---- --- | ---- --- | ---- --- | 2080 694 |
| 23-33-240 | GROMMET, Instrument Panel Gear Selector Support, D2, D3, D4, S1 | 4 | 2161 522 | 2161 522 | 2161 522 | ---- --- | ---- --- |
| **23-34-0 BODY PANELS** | | | | | | | |
| 23-34-16 | PANEL, Tail Gate Opening Sill Sub. | 1 | 1877 833 | 1877 833 | ---- --- | 1877 833 | ---- --- |
| 23-34-17 | REINFORCEMENT, Tail Gate Opening Sill Panel, Sub. | 1 | 1877 834 | 1877 834 | ---- --- | 1877 834 | ---- --- |
| 23-34-26 | PANEL, Wheelhouse to Rear Pillar Sub. Right | 1 | 1960 090 | 1960 090 | ---- --- | 1960 090 | ---- --- |
| | Left | 1 | 1960 091 | 1960 091 | ---- --- | 1960 091 | ---- --- |
| 23-34-27 | PANEL, Wheelhouse 4D., Sp. 4D., Sp. Cl. Cp., Cl. Sed., D3, D4, Right | 1 | 2084 520 | 2084 520 | ---- --- | ---- --- | ---- --- |
| | Left | 1 | 2084 521 | 2084 521 | ---- --- | ---- --- | ---- --- |
| | 4 D., Sp. 4 D., Sp. Cl. Cp., D1, D2 Right | 1 | ---- --- | 2084 524 | 2084 524 | 2084 524 | 2084 526 |
| | Left | 1 | ---- --- | 2084 525 | 2084 525 | 2084 525 | 2084 527 |
| | Cv. Cp., D4 Right | 1 | 2084 518 | 2084 518 | ---- --- | ---- --- | ---- --- |
| | Left | 1 | 2084 519 | 2084 519 | ---- --- | ---- --- | ---- --- |
| | Cv. Cp., D2 Right | 1 | ---- --- | 2084 522 | 2084 522 | 2084 522 | 2084 528 |
| | Left | 1 | ---- --- | 2084 523 | 2084 523 | 2084 523 | 2084 529 |
| | Sub. Right | 1 | 2084 516 | 2084 516 | ---- --- | 2084 516 | ---- --- |
| | Left | 1 | 2084 517 | 2084 517 | ---- --- | 2084 517 | ---- --- |
| 23-34-32 | BAFFLE or SEAL, Wheelhouse to Quarter Panel Dust 2 D. Sub. BAFFLE Right | 1 | 2093 838 | ---- --- | ---- --- | ---- --- | ---- --- |
| | BAFFLE Left | 1 | 2093 839 | ---- --- | ---- --- | ---- --- | ---- --- |
| | SEAL | 2 | 2188 958 | ---- --- | ---- --- | ---- --- | ---- --- |
| 23-34-80 | PANEL, Cowl Side except Cv. Cp. Right | 1 | 1909 324 | 1909 324 | 1909 324 | 1909 324 | ---- --- |
| | Left | 1 | 1909 325 | 1909 325 | 1909 325 | 1909 325 | ---- --- |
| | Cv. Cp. Right | 1 | 1952 946 | 1952 946 | ---- --- | 1952 946 | 2084 760 |
| | Left | 1 | 1952 947 | 1952 947 | ---- --- | 1952 947 | 2084 761 |
| | 4 D. Right | 1 | ---- --- | ---- --- | ---- --- | ---- --- | 2084 762 |
| | Left | 1 | ---- --- | ---- --- | ---- --- | ---- --- | 2084 763 |
| | Sp. Cl. Cp., Sp. 4 D. Right | 1 | ---- --- | ---- --- | ---- --- | ---- --- | 2084 758 |
| | Left | 1 | ---- --- | ---- --- | ---- --- | ---- --- | 2084 759 |
| | PANEL, Cowl Top and Dash, with Windshield Lower Frame w/o Air Conditioning | 1 | 1909 312 | 1909 312 | 1909 312 | 1909 312 | ---- --- |
| | FRAME and PANEL, Windshield and Cowl Top Complete 4 D., Sp. 4D., Sp. Cl. Cp. | 1 | ---- --- | ---- --- | ---- --- | ---- --- | 2084 538 |
| | Cv. Cp. | 1 | ---- --- | ---- --- | ---- --- | ---- --- | 2084 539 |
| 23-34-85 | COVER PACKAGE, Cowl Upper Panel to Front Pillar Joint Right | 1 | ---- --- | ---- --- | ---- --- | ---- --- | 2196 479 |
| | Left | 1 | ---- --- | ---- --- | ---- --- | ---- --- | 2196 480 |
| | SCREW | 2 | ---- --- | ---- --- | ---- --- | ---- --- | 9413 268 |
| 23-34-100 | FILLER, Cowl Side to Door at Belt Right | 1 | ---- --- | ---- --- | ---- --- | ---- --- | 2188 416 |
| | Left | 1 | ---- --- | ---- --- | ---- --- | ---- --- | 2188 417 |
| 23-34-110 | PANEL, Dash | 1 | ---- --- | ---- --- | ---- --- | ---- --- | 2084 534 |
| 23-34-116 | COVER, Dash Panel Air Duct w/o Heater or Heater and Air Conditioning | 1 | 1750 445 | 1750 445 | 1750 445 | 1750 445 | 1750 445 |
| | w/Heater | 1 | ---- --- | ---- --- | ---- --- | ---- --- | ⊟2188 985 |
| | BOLT | 12 | 180 018 | 180 018 | 180 018 | 180 018 | 180 018 |
| | Rubber, Drain Hole | 2 | 1810 565 | 1810 565 | 1810 565 | 1810 565 | 1810 565 |
| | Air Duct | 1 | ---- --- | ---- --- | ---- --- | ---- --- | 1861 425 |
| 23-34-117 | NUT, Dash Panel Body Front Hold-Down Brace Reinforcement, C1 | 2 | ---- --- | 152 263 | 152 263 | 152 263 | ---- --- |



MyMopar.com

## 23-34-0 BODY PANELS-Cont'd

| CODE | REMARKS | | PER CAR | PLYMOUTH | DODGE | DESOTO | CHRYSLER | IMPERIAL |
|---|---|---|---|---|---|---|---|---|
| 23-34-120 | PANEL, Door Outside Repair | | | | | | | |
| | 4 D. | Front Right | 1 | 1954 736 | 1954 736 | 1954 740 | 1954 740 | 1877 388 |
| | | Left | 1 | 1954 737 | 1954 737 | 1954 741 | 1954 741 | 1877 389 |
| | 4 D. Sub. | Front Right | 1 | 1954 736 | 1954 736 | ---- --- | ---- --- | ---- --- |
| | | Left | 1 | 1954 737 | 1954 737 | ---- --- | ---- --- | ---- --- |
| | Sp. 4D., Sp. 4 D. Sub. | Front Right | 1 | 2165 236 | 2165 236 | ---- --- | ---- --- | ---- --- |
| | | Left | 1 | 2165 237 | 2165 237 | ---- --- | ---- --- | ---- --- |
| | Sp. 4 D., Sp. 4 D. Sub. | Front Right | 1 | ---- --- | ---- --- | 2165 240 | 2165 240 | 1877 284 |
| | | Left | 1 | ---- --- | ---- --- | 2165 241 | 2165 241 | 1877 285 |
| | Sp. Cl. Cp., Cv. Cp. | Right | 1 | 1867 682 | 1867 682 | 1869 662 | 1869 662 | 1877 288 |
| | | Left | 1 | 1867 683 | 1867 683 | 1869 663 | 1869 663 | 1877 289 |
| | Cl. Sed., 2 D. Sub. | Right | 1 | 1954 738 | 1954 738 | ---- --- | ---- --- | ---- --- |
| | | Left | 1 | 1954 739 | 1954 739 | ---- --- | ---- --- | ---- --- |
| | Sp. 4 D., D1, D2 | Rear Right | 1 | 1867 870 | 1869 664 | ---- --- | ---- --- | 1877 286 |
| | | Left | 1 | 1867 871 | 1869 665 | ---- --- | ---- --- | 1877 287 |
| | Sp. 4 D., D3, D4 | Rear Right | 1 | ---- --- | 1963 002 | ---- --- | ---- --- | ---- --- |
| | | Left | 1 | ---- --- | 1963 003 | ---- --- | ---- --- | ---- --- |
| | 4 D., D1, D2 | Rear Right | 1 | 1954 742 | 1869 672 | 1869 674 | 1869 674 | 1877 376 |
| | | Left | 1 | 1954 743 | 1869 673 | 1869 675 | 1869 675 | 1877 377 |
| | 4 D., D3, D4 | Rear Right | 1 | ---- --- | 1964 502 | ---- --- | ---- --- | ---- --- |
| | | Left | 1 | ---- --- | 1964 503 | ---- --- | ---- --- | ---- --- |
| | 4 D. Sub. | Rear Right | 1 | 1954 744 | 1954 744 | ---- --- | ---- --- | ---- --- |
| | | Left | 1 | 1954 745 | 1954 745 | ---- --- | ---- --- | ---- --- |
| | Sp. 4 D. Sub. | Rear Right | 1 | ---- --- | 1869 670 | ---- --- | ---- --- | ---- --- |
| | | Left | 1 | ---- --- | 1869 671 | ---- --- | ---- --- | ---- --- |
| | Sp. 4D., Sp. 4D. Sub. | Rear Right | 1 | ---- --- | ---- --- | 1869 678 | 1869 678 | ---- --- |
| | | Left | 1 | ---- --- | ---- --- | 1869 679 | 1869 679 | ---- --- |
| 23-34-122 | BRACE and C/NUT, Dash Panel No. 1 and No. 1A Body Hold-Down Bolt | Right | 1 | ---- --- | ---- --- | ---- --- | ---- --- | B2189 128 |
| | | Left | 1 | ---- --- | ---- --- | ---- --- | ---- --- | B2189 129 |
| 23-34-126 | REINFORCEMENT, Dash Panel No. 1 and No. 1A Body Hold-Down Bolt Brace | Right | 1 | ---- --- | ---- --- | ---- --- | ---- --- | *1861 248 |
| | | Left | 1 | ---- --- | ---- --- | ---- --- | ---- --- | *1861 249 |
| 23-34-136 | COVER, Front Door Inside Panel Access Hole | Upper Front | 2 | ---- --- | ---- --- | ---- --- | ---- --- | 1751 033 |
| 23-34-166 | PANEL, Deck Opening Upper | | | | | | | |
| | 4 D., Sp. 4 D., Cl. Sed. | | 1 | 1909 314 | 1909 314 | ---- --- | ---- --- | ---- --- |
| | 4 D., Sp. 4 D., D1, D2 | | 1 | ---- --- | 1909 316 | 1963 213 | 1963 213 | 1961 444 |
| | Sp. Cl. Cp., D3, D4 | | 1 | 1909 313 | 1909 313 | ---- --- | ---- --- | ---- --- |
| | Sp. Cl. Cp., D1, D2 | | 1 | -------- | 1909 315 | ---- --- | ---- --- | 1961 442 |
| | Sp. Cl. Cp. | w/Deck Lid Tire COVER | 1 | ---- --- | ---- --- | 1963 214 | 1963 214 | ---- --- |
| | Cv. Cp. | | 1 | ---- --- | ---- --- | ---- --- | 2196 635 | 1961 443 |
| | Cv. Cp., D2 | | 1 | ---- --- | *1869 636 | ---- --- | ---- --- | ---- --- |
| | Cv. Cp., D3, D4 | | 1 | *1869 633 | *1869 633 | ---- --- | ---- --- | ---- --- |
| 23-34-167 | PANEL, Deck Opening Lower, except Sub. | | 1 | 2084 514 | 2084 513 | 1973 152 | 1973 153 | *1877 282 |
| 23-34-174 | TUBE, Deck Opening Lower Panel Drain Sp. Cl. Cp., Cv. Cp., 4D., Sp. 4 D. | | 2 | ---- --- | ---- --- | 2188 499 | 2188 499 | ---- --- |
| 23-34-176 | EXTENSION, Quarter Outside Rear Panel 4D., Sp. 4D., Sp. Cl. Cp., Cv. Cp., Cl. Sed., D3, D4 | Right | 1 | ---- --- | 1963 024 | ---- --- | ---- --- | ---- --- |
| | | Left | 1 | ---- --- | 1963 025 | ---- --- | ---- --- | ---- --- |
| | Cl. Sed., 4 D., Sp. 4 D., Sp. Cl. Cp., Cv. Cp., D1, D2 | Upper, Right | 1 | ---- --- | 1883 782 | ---- --- | ---- --- | ---- --- |
| | | Left | 1 | ---- --- | 1883 783 | ---- --- | ---- --- | ---- --- |
| | Except Sub. | Lower, Right | 1 | ---- --- | 1952 762 | ---- --- | ---- --- | ---- --- |
| | | Left | 1 | ---- --- | 1952 763 | ---- --- | ---- --- | ---- --- |
| | EXTENSION, Deck Opening Lower Panel to Floor Pan End, except Sub. | Right | 1 | 1954 280 | ---- --- | ---- --- | ---- --- | ---- --- |
| | | Left | 1 | 1954 281 | ---- --- | ---- --- | ---- --- | ---- --- |
| | EXTENSION, Deck Opening Lower | Right | 1 | ---- --- | ---- --- | ---- --- | ---- --- | 1877 350 |
| | | Left | 1 | ---- --- | ---- --- | ---- --- | ---- --- | 1877 351 |
| 23-34-177 | REINFORCEMENT, Quarter Panel Deck Opening Side Flange, Cl. Sed., Sp. Cl. Cp., Cv. Cp., 4 D., Sp. 4 D. | Right | 1 | 1909 416 | 1883 848 | ---- --- | ---- --- | ---- --- |
| | | Left | 1 | 1909 417 | 1883 849 | ---- --- | ---- --- | ---- --- |

★ Indicates use as required.
⊟ Indicates parts not listed in any previous parts book.
Dec. 9, 1960 Supersedes April 20, 1960.



Printed in U.S.A.
Prices and specifications subject to change without notice.
* Indicates change or addition.
MyMopar.com

| CODE | REMARKS | | PER CAR | PLYMOUTH | DODGE | DESOTO | CHRYSLER | IMPERIAL |
|---|---|---|---|---|---|---|---|---|
| **23-34-0 BODY PANELS-Cont'd** | | | | | | | | |
| 23-34-178 | PLUG, Front Floor Pan Drain Hole | | 2 | 1810 273 | 1810 273 | 1810 273 | 1810 273 | 1810 273 |
| | PLUG, Deck Opening Lower Panel Side Extension Bumper Access Hole | | 2 | ---- --- | ---- --- | ---- --- | ---- --- | 1810 076 |
| 23-34-179 | REINFORCEMENT or SUPPORT, Deck Opening Panel | | | | | | | |
| | Cv. Cp., D3, D4 | Upper | 1 | *1882 391 | *1882 391 | ---- --- | *1882 286 | ---- --- |
| | Cv. Cp., D2 | Upper | 1 | ---- --- | *1882 393 | ---- --- | ---- --- | ---- --- |
| | All | Lower | 1 | ---- --- | ---- --- | ---- --- | ---- --- | ⊟2093 925 |
| | All, except Sub., Support | Lower Right | 1 | ---- --- | ⊟1954 098 | ---- --- | ---- --- | ---- --- |
| | | Left | 1 | ---- --- | ⊟1954 099 | ---- --- | ---- --- | ---- --- |
| 23-34-182 | PANEL, Deck Opening Lower Panel Fuel Tank Filler Tube Opening, except Sub. | | 1 | ---- --- | ---- --- | *1878 576 | *1878 576 | ---- --- |
| 23-34-184 | LETTER or NAME PLATE PACKAGE, Deck Opening Lower Panel, except Sub., Chrysler | | 1 | ---- --- | ---- --- | ---- --- | 2196 659 | ---- --- |
| | NUT and SEAL | | 4 | ---- --- | ---- --- | ---- --- | 6000 490 | ---- --- |
| | | "I" | 2 | ---- --- | ---- --- | ---- --- | ---- --- | 2196 486 |
| | NUT and SEAL | | 4 | ---- --- | ---- --- | ---- --- | ---- --- | 6000 490 |
| | | "M" | 1 | ---- --- | ---- --- | ---- --- | ---- --- | 2196 487 |
| | NUT and SEAL | | 2 | ---- --- | ---- --- | ---- --- | ---- --- | 6000 490 |
| | | "P" | 1 | ---- --- | ---- --- | ---- --- | ---- --- | 2196 488 |
| | NUT and SEAL | | 2 | ---- --- | ---- --- | ---- --- | ---- --- | 6000 490 |
| | | "E" | 1 | ---- --- | ---- --- | ---- --- | ---- --- | 2196 489 |
| | CLIP | | 1 | ---- --- | ---- --- | ---- --- | ---- --- | 6006 468 |
| | | "R" | 1 | ---- --- | ---- --- | ---- --- | ---- --- | 2196 490 |
| | CLIP | | 1 | ---- --- | ---- --- | ---- --- | ---- --- | 6006 468 |
| | | "A" | 1 | ---- --- | ---- --- | ---- --- | ---- --- | 2196 491 |
| | NUT and SEAL | | 2 | ---- --- | ---- --- | ---- --- | ---- --- | 6000 490 |
| | | "L" | 1 | ---- --- | ---- --- | ---- --- | ---- --- | 2196 492 |
| | NUT and SEAL | | 2 | ---- --- | ---- --- | ---- --- | ---- --- | 6000 490 |
| 23-34-187 | SEAL, Deck Opening Lower Panel to Rear Bumper except Sub. | | 1 | 1954 573 | ---- --- | ---- --- | ---- --- | ---- --- |
| 23-34-225 | COVER, Quarter Inside Panel Access Hole, Sp. Cl. Cp., Cv. Cp. | | 2 | ---- --- | ---- --- | ---- --- | ---- --- | 1691 107 |
| 23-34-227 | GUARD, Quarter Panel Rear Lower Dust Sub., Rubber | Right | 1 | 2093 666 | 2093 666 | ---- --- | 2093 666 | ---- --- |
| | | Left | 1 | 2093 667 | 2093 667 | ---- --- | 2093 667 | ---- --- |
| 23-34-228 | RETAINER, Quarter Panel Lower Dust Guard Sub. | | 2 | 2093 478 | ---- --- | ---- --- | 2093 478 | ---- --- |
| 23-34-230 | STRAINER and Clinch NUT, Quarter Panel Cv. Cp. | | 2 | 1964 514 | ---- --- | ---- --- | ---- --- | ---- --- |
| 23-34-231 | BRACKET, Quarter Outside Panel Strainer to Quarter Lower Pillar, Cv. Cp. | Right | 1 | 1964 310 | ---- --- | ---- --- | ---- --- | ---- --- |
| | | Left | 1 | 1964 311 | ---- --- | ---- --- | ---- --- | ---- --- |
| 23-34-233 | PANEL, Quarter Outside Rear, Inner except Sub. | Right | 1 | 1882 080 | ---- --- | ---- --- | ---- --- | ---- --- |
| | | Left | 1 | 1882 081 | ---- --- | ---- --- | ---- --- | ---- --- |
| | 4 D., Sp. 4 D., D1, D2 | Right | 1 | ---- --- | 1882 036 | ---- --- | ---- --- | ---- --- |
| | | Left | 1 | ---- --- | 1882 037 | ---- --- | ---- --- | ---- --- |
| | 4 D., Sp. 4 D., D3, D4 | Right | 1 | ---- --- | 1963 012 | ---- --- | ---- --- | 1877 272 |
| | | Left | 1 | ---- --- | 1963 013 | ---- --- | ---- --- | 1877 273 |
| | Sp. Cl. Cp., D1, D2 | Right | 1 | ---- --- | 1882 034 | ---- --- | ---- --- | ---- --- |
| | | Left | 1 | ---- --- | 1882 035 | ---- --- | ---- --- | ---- --- |
| | Sp. Cl. Cp., D3, D4 | Right | 1 | ---- --- | 1963 028 | ---- --- | ---- --- | 1877 308 |
| | | Left | 1 | ---- --- | 1963 029 | ---- --- | ---- --- | 1877 309 |
| | Cv. Cp., D2 | Right | 1 | ---- --- | 1882 040 | ---- --- | ---- --- | ---- --- |
| | | Left | 1 | ---- --- | 1882 041 | ---- --- | ---- --- | ---- --- |
| | Cv. Cp., D3, D4 | Right | 1 | ---- --- | 1963 032 | ---- --- | ---- --- | 1877 340 |
| | | Left | 1 | ---- --- | 1963 033 | ---- --- | ---- --- | 1877 341 |
| | Cl. Sed., D3, D4 | Right | 1 | ---- --- | 1963 022 | ---- --- | ---- --- | ---- --- |
| | | Left | 1 | ---- --- | 1963 023 | ---- --- | ---- --- | ---- --- |
| 23-34-234 | PANEL, Quarter Inside Sp. Cl. Cp., D3, D4 | Right | 1 | 1963 738 | 1963 738 | ---- --- | ---- --- | ---- --- |
| | | Left | 1 | 1963 739 | 1963 739 | ---- --- | ---- --- | ---- --- |
| | Sp. Cl. Cp., D1, D2 | Right | 1 | ---- --- | 1963 740 | 1963 740 | 1963 740 | 1751 000 |
| | | Left | 1 | ---- --- | 1963 741 | 1963 741 | 1963 741 | 1751 001 |

★ Indicates use as required.
⊟ Indicates parts not listed in any previous parts book.
* Indicates change or addition.



Printed in U.S.A.
Prices and specifications subject to change without notice.
Dec. 9, 1960 Supersedes April 20, 1960.
MyMopar.com

| CODE | REMARKS | | PER CAR | PLYMOUTH | DODGE | DESOTO | CHRYSLER | IMPERIAL |
|---|---|---|---|---|---|---|---|---|
| **23-34-0 BODY PANELS-Cont'd** | | | | | | | | |
| 23-34-234 | PANEL - Cont'd | | | | | | | |
| | Cv. Cp., D2 | Right | 1 | 1964 184 | 1964 186 | ---- --- | 1964 182 | 1751 002 |
| | | Left | 1 | 1964 185 | 1964 187 | ---- --- | 1964 183 | 1751 003 |
| | Cv. Cp., D3, D4 | Right | 1 | ---- --- | 1964 184 | ---- --- | ---- --- | ---- --- |
| | | Left | 1 | ---- --- | 1964 185 | ---- --- | ---- --- | ---- --- |
| | Cl. Sed., 2 D. Sub. | Right | 1 | 1963 736 | 1963 736 | ---- --- | ---- --- | ---- --- |
| | | Left | 1 | 1963 737 | 1963 737 | ---- --- | ---- --- | ---- --- |
| 23-34-235 | PANEL and LOCK PILLAR, Quarter Outside | | | | | | | |
| | 4 D., Sp. 4 D., D3, D4 | Right | 1 | 2084 493 | 2084 542 | ---- --- | ---- --- | ---- --- |
| | | Left | 1 | 2084 494 | 2084 543 | ---- --- | ---- --- | ---- --- |
| | 4 D., Sp. 4 D., D1, D2 | Right | 1 | ---- --- | 2084 507 | 1952 328 | 1952 328 | 1877 590 |
| | | Left | 1 | ---- --- | 2084 508 | ⊟2165 867 | ⊟2165 867 | 1877 591 |
| | Sp. Cl. Cp., D1, D2 | Right | 1 | ---- --- | 2084 505 | 1964 840 | 1964 840 | 1877 592 |
| | | Left | 1 | ---- --- | 2084 506 | 1964 841 | 1964 841 | 1877 593 |
| | Sp. Cl. Cp., D3, D4 | Right | 1 | 2084 495 | 2084 511 | ---- --- | ---- --- | ---- --- |
| | | Left | 1 | 2084 496 | 2084 512 | ---- --- | ---- --- | ---- --- |
| | Cv. Cp., D4 | Right | 1 | 2084 497 | 2084 548 | 1964 842 | 1964 842 | 1877 594 |
| | | Left | 1 | 2084 498 | 2084 549 | 1964 843 | 1964 843 | 1877 595 |
| | Cl. Sed. | Right | 1 | 2084 503 | 2084 509 | ---- --- | ---- --- | ---- --- |
| | | Left | 1 | 2084 504 | 2084 510 | ---- --- | ---- --- | ---- --- |
| | Cv. Cp., D2 | Right | 1 | ---- --- | 2084 540 | ---- --- | ---- --- | ---- --- |
| | | Left | 1 | ---- --- | 2084 541 | ---- --- | ---- --- | ---- --- |
| | 2 D. Sub. | Right | 1 | 2084 501 | ---- --- | ---- --- | ---- --- | ---- --- |
| | | Left | 1 | 2084 502 | ---- --- | ---- --- | ---- --- | ---- --- |
| | 4 D. Sub., Sp. 4 D. Sub. | Right | 1 | 2084 499 | 2196 114 | ---- --- | 2196 116 | ---- --- |
| | | Left | 1 | 2084 500 | 2196 115 | ---- --- | 2196 117 | ---- --- |
| | PANEL, Quarter Outside Repair, Sp. Cl. Cp., D3, D4 | Right | 1 | 1869 644 | 1963 026 | 1861 074 | 1861 074 | 2093 368 |
| | | Left | 1 | 1869 645 | 1963 027 | 1861 075 | 1861 075 | 2093 369 |
| | 2 D. Sub. | Right | 1 | 1861 064 | ---- --- | ---- --- | ---- --- | ---- --- |
| | | Left | 1 | 1861 065 | ---- --- | ---- --- | ---- --- | ---- --- |
| | 4 D., Sp. 4 D., D1, D2 | Right | 1 | 1869 640 | 1869 650 | 1861 078 | 1861 078 | 2093 372 |
| | | Left | 1 | 1869 641 | 1869 651 | 1861 079 | 1861 079 | 2093 373 |
| | Sp. Cl. Cp., Cv. Cp., D1, D2 | Right | 1 | ---- --- | 1869 654 | ---- --- | ---- --- | ---- --- |
| | | Left | 1 | ---- --- | 1869 655 | ---- --- | ---- --- | ---- --- |
| | Cl. Sed., D3, D4 | Right | 1 | 1869 642 | 1963 008 | ---- --- | ---- --- | ---- --- |
| | | Left | 1 | 1869 643 | 1963 009 | ---- --- | ---- --- | ---- --- |
| | Cv. Cp., D3, D4 | Right | 1 | 1869 646 | 1963 030 | ---- --- | 1954 370 | 2093 370 |
| | | Left | 1 | 1869 647 | 1963 031 | ---- --- | 1954 371 | 2093 371 |
| | 4 D. Sub., Sp. 4 D. Sub. | Right | 1 | 1861 066 | 1861 068 | ---- --- | 1861 082 | ---- --- |
| | | Left | 1 | 1861 067 | 1861 069 | ---- --- | 1861 083 | ---- --- |
| | 4 D., Sp. 4 D., D3, D4 | Right | 1 | ---- --- | 1963 010 | ---- --- | ---- --- | ---- --- |
| | | Left | 1 | ---- --- | 1963 011 | ---- --- | ---- --- | ---- --- |
| 23-34-236 | EXTENSION, Quarter Inside, 2 D. Sub. | Right | 1 | 1950 276 | ---- --- | ---- --- | ---- --- | ---- --- |
| | | Left | 1 | 1950 277 | ---- --- | ---- --- | ---- --- | ---- --- |
| | Sp. Cl. Cp., Cv. Cp., 4 D., Sp. 4 D., D1, D2 | Upper Right | 1 | ---- --- | 1883 782 | ---- --- | ---- --- | ---- --- |
| | | Left | 1 | ---- --- | 1883 783 | ---- --- | ---- --- | ---- --- |
| | Cv. Cp. | Right | 1 | ---- --- | ---- --- | ---- --- | ---- --- | 1750 188 |
| | | Left | 1 | ---- --- | ---- --- | ---- --- | ---- --- | 1750 189 |
| | Sp. Cl. Cp. | Right | 1 | ---- --- | ---- --- | ---- --- | ---- --- | 1692 142 |
| | | Left | 1 | ---- --- | ---- --- | ---- --- | ---- --- | 1692 143 |
| | Sp. Cl. Cp., Cv. Cp., w/Clinch NUT | Right | 1 | ---- --- | ---- --- | ---- --- | ---- --- | 1810 204 |
| | | Left | 1 | ---- --- | ---- --- | ---- --- | ---- --- | 1810 205 |
| 23-34-238 | NAME PLATE, Quarter Outside | | | | | | | |
| | Sub., PKG. | Custom | 2 | 2196 126 | ---- --- | ---- --- | ---- --- | ---- --- |
| | CLIP | | 4 | 6000 020 | ---- --- | ---- --- | ---- --- | ---- --- |
| | Sub., PKG. | Sport | 2 | 2196 127 | ---- --- | ---- --- | ---- --- | ---- --- |
| | CLIP | | 4 | 6000 020 | ---- --- | ---- --- | ---- --- | ---- --- |
| | PKG. | Seneca | 2 | ---- --- | 2196 804 | ---- --- | ---- --- | ---- --- |
| | PALNUT | | 4 | ---- --- | 6000 616 | ---- --- | ---- --- | ---- --- |
| | PKG. | Pioneer | 2 | ---- --- | 2196 803 | ---- --- | ---- --- | ---- --- |
| | PALNUT | | 4 | ---- --- | 6000 616 | ---- --- | ---- --- | ---- --- |
| | PKG. | Phoenix | 2 | ---- --- | 2196 802 | ---- --- | ---- --- | ---- --- |
| | PALNUT | | 4 | ---- --- | 6000 616 | ---- --- | ---- --- | ---- --- |
| | | Gold Finish Adventurer | 2 | ---- --- | ---- --- | 2196 840 | ---- --- | ---- --- |
| | | Chrome Finish Adventurer | 2 | ---- --- | ---- --- | 2196 876 | ---- --- | ---- --- |
| | NUT | | 4 | ---- --- | ---- --- | 152 259 | ---- --- | ---- --- |

★ Indicates use as required.
⊟ Indicates parts not listed in any previous parts book.
Dec. 9, 1960 Supersedes April 20, 1960.



MyMopar.com

## 23-34-0 BODY PANELS - Cont'd

| CODE | REMARKS | | PER CAR | PLYMOUTH | DODGE | DESOTO | CHRYSLER | IMPERIAL |
|---|---|---|---|---|---|---|---|---|
| 23-34-240 | DEFLECTOR PACKAGE, Quarter Panel Stone | | | | | | | |
| | Sub. | Right | 1 | 2196 184 | ---- --- | ---- --- | ---- --- | ---- --- |
| | | Left | 1 | 2196 185 | ---- --- | ---- --- | ---- --- | ---- --- |
| | SCREW | | 2 | 125 978 | ---- --- | ---- --- | ---- --- | ---- --- |
| | NUT | | 4 | 6000 028 | ---- --- | ---- --- | ---- --- | ---- --- |
| | Except Sub., DEFLECTOR | Right | 1 | 2084 562 | ---- --- | ---- --- | ---- --- | ---- --- |
| | | Left | 1 | 2084 563 | ---- --- | ---- --- | ---- --- | ---- --- |
| | NUT and SEAL | | 4 | 6000 028 | ---- --- | ---- --- | ---- --- | ---- --- |
| | D1, D2, DEFLECTOR | Right | 1 | ---- --- | 2196 400 | ---- --- | ---- --- | ---- --- |
| | | Left | 1 | ---- --- | 2196 401 | ---- --- | ---- --- | ---- --- |
| | NUT and SEAL | | 4 | ---- --- | 6000 021 | ---- --- | ---- --- | ---- --- |
| | SCREW | | 2 | ---- --- | 9413 433 | ---- --- | ---- --- | ---- --- |
| | D3, D4, except Sub., DEFLECTOR | Right | 1 | ---- --- | 2196 294 | ---- --- | ---- --- | ---- --- |
| | | Left | 1 | ---- --- | 2196 295 | ---- --- | ---- --- | ---- --- |
| | SCREW | | 2 | ---- --- | 274 660 | ---- --- | ---- --- | ---- --- |
| | Sub., D3, D4, DEFLECTOR | Right | 1 | ---- --- | 2196 400 | ---- --- | ---- --- | ---- --- |
| | | Left | 1 | ---- --- | 2196 401 | ---- --- | ---- --- | ---- --- |
| | All, DEFLECTOR | Right | 1 | ---- --- | ---- --- | *2196 528 | *2196 528 | ---- --- |
| | | Left | 1 | ---- --- | ---- --- | 2196 529 | 2196 529 | ---- --- |
| | SCREW | | 6 | ---- --- | ---- --- | 125 978 | 125 978 | ---- --- |
| | All, DEFLECTOR | Right | 1 | ---- --- | ---- --- | ---- --- | ---- --- | *2196 818 |
| | | Left | 1 | ---- --- | ---- --- | ---- --- | ---- --- | 2196 819 |
| | SCREW | | 4 | ---- --- | ---- --- | ---- --- | ---- --- | 9414 080 |
| 23-34-242 | EXTENSION, Rear Quarter Outside Panel | | | | | | | |
| | Sub., Rear Outer | Right | 1 | 1861 090 | 1960 648 | ---- --- | ---- --- | |
| | | Left | 1 | 1861 091 | 1960 649 | ---- --- | ---- --- | ---- --- |
| | 4 D. Sub., Rear Upper | Right | 1 | ---- --- | 1878 294 | ---- --- | ---- --- | ---- --- |
| | | Left | 1 | ---- --- | 1878 295 | ---- --- | ---- --- | ---- --- |
| | Sub., Rear Lower | Right | 1 | ---- --- | 1861 094 | ---- --- | ---- --- | ---- --- |
| | | Left | 1 | ---- --- | 1861 095 | ---- --- | ---- --- | ---- --- |
| | Sp. 4 D. Sub. | Right | 1 | ---- --- | ---- --- | ---- --- | 1861 096 | ---- --- |
| | | Left | 1 | ---- --- | ---- --- | ---- --- | 1861 097 | ---- --- |
| 23-34-245 | RETAINER and STUD, Quarter Panel Outside Stone Deflector, except Sub., D3, D4 | | 2 | ---- --- | 6000 779 | ---- --- | ---- --- | ---- --- |
| 23-34-249 | REINFORCEMENT, Quarter Inside Panel to Wheelhouse | | | | | | | |
| | Sp. Cl. Cp. | Right | 1 | ---- --- | ---- --- | ---- --- | ---- --- | 1810 056 |
| | | Left | 1 | ---- --- | ---- --- | ---- --- | ---- --- | 1810 057 |
| 23-34-253 | DOOR, Fuel Tank Filler | | 1 | ---- --- | ---- --- | ---- --- | ---- --- | 1877 283 |
| 23-34-255 | SPRING, Fuel Tank Filler Door | | 1 | ---- --- | ---- --- | ---- --- | ---- --- | 1877 486 |
| 23-34-258 | EXTENSION, Quarter Panel Tail Lamp Opening Reinforcement, Upper, Sp. Cl. Cp., Cv. Cp., 4 D., Sp. 4 D. | Right | 1 | ---- --- | ---- --- | 1961 016 | 1961 016 | ---- --- |
| | | Left | 1 | ---- --- | ---- --- | 1961 017 | 1961 017 | ---- --- |
| 23-34-270 | BUMPER, Fuel Tank Filler Door | | 1 | ---- --- | ---- --- | ---- --- | ---- --- | 1882 429 |
| 23-34-275 | BUMPER, Quarter Outside Panel Jack, except Sub. | Right | 1 | ---- --- | 1964 650 | ---- --- | ---- --- | ---- --- |
| | | Left | 1 | ---- --- | 1964 651 | ---- --- | ---- --- | ---- --- |
| 23-34-285 | SUPPORT, Quarter Panel Outside Jack, Cl. Sed., Sp. Cl. Cp., Cv. Cp., 4 D., Sp. 4 D., | Right | 1 | 1963 436 | ---- --- | ---- --- | ---- --- | ---- --- |
| | | Left | 1 | 1963 437 | ---- --- | ---- --- | ---- --- | ---- --- |
| 23-34-286 | BRACKET, Quarter Panel Rear Bumper Support Bar Jacking, Sub. | Right | 1 | 1961 022 | 1961 024 | ---- --- | 1961 024 | ---- --- |
| | | Left | 1 | 1961 023 | 1961 025 | ---- --- | 1961 025 | ---- --- |
| 23-34-301 | PANEL, Roof, 4 D., Cl. Sed. | | 1 | 1867 948 | ---- --- | ---- --- | ---- --- | ---- --- |
| | Sp. Cl. Cp., | w/High Window | 1 | 1952 666 | 1952 666 | *1861 118 | *1861 118 | ---- --- |
| | Sp. Cl. Cp., P1-M, P2-M, D1-L, D3-M, D4-M | w/Low Window | 1 | 1869 615 | 1869 615 | ---- --- | ---- --- | ---- --- |
| | Cl. Sed., Sp. 4 D., 4 D., D3, D4 | w/Low Window | 1 | ---- --- | 1963 016 | ---- --- | ---- --- | ---- --- |
| | Sub. | | 1 | 2093 196 | 2093 196 | ---- --- | 2093 202 | ---- --- |
| | 4D., Sp. 4D., D1, D2, S1, | w/Low Window | 1 | ---- --- | *1867 873 | *1867 873 | *1867 873 | ---- --- |
| | Sp. 4 D., D3, D4 | w/High Window | 1 | ---- --- | 1963 017 | ---- --- | ---- --- | ---- --- |
| | Sp. 4 D., P1-H, P2-H, D1, D2 | w/High Window | 1 | 1952 698 | 1952 642 | 1952 642 | 1952 642 | ---- --- |

★ Indicates use as required.
⊟ Indicates parts not listed in any previous parts book.
* Indicates change or addition.



Printed in U.S.A.
Prices and specifications subject to change without notice.
Dec. 9, 1960 Supersedes April 20, 1960.
MyMopar.com

| CODE | REMARKS | PER CAR | PLYMOUTH | DODGE | DESOTO | CHRYSLER | IMPERIAL |
|---|---|---|---|---|---|---|---|
| **23-34-0 BODY PANELS-Cont'd** | | | | | | | |
| 23-34-301 | PANEL - Cont'd | | | | | | |
| | 4 D., Sp. 4 D. w/EXTENSIONS | 1 | ---- --- | ---- --- | ---- --- | ---- --- | 1973 250 |
| | Sp. Cl. Cp. w/EXTENSIONS | 1 | ---- --- | ---- --- | ---- --- | ---- --- | 1973 251 |
| | 4D., Sp. 4D. | 1 | ---- --- | ---- --- | ---- --- | ---- --- | *1877 732 |
| | Sp. Cl. Cp. | 1 | ---- --- | ---- --- | ---- --- | ---- --- | *1877 267 |
| | NOTE: When using 1973250 on Low Window for PY1-H also use one each of 1961511, 1961513 Reinforcements and one 1961512 Extension Panel. | | | | | | |
| | PANEL, Roof Rear Extension, 4D., Sp. 4D., PY1-H | 1 | ---- --- | ---- --- | ---- --- | ---- --- | *1961 512 |
| 23-34-302 | EXTENSION, Roof Panel Side | | | | | | |
| | Sp. Cl. Cp., w/Low Window Right | 1 | *1883 296 | *1883 296 | ---- --- | ---- --- | ---- --- |
| | Left | 1 | *1883 297 | *1883 297 | ---- --- | ---- --- | ---- --- |
| | Sp. Cl. Cp. w/High Window, Right | 1 | 1952 684 | 1952 684 | ---- --- | ---- --- | ---- --- |
| | Left | 1 | 1952 685 | 1952 685 | ---- --- | ---- --- | ---- --- |
| | Sub. Right | 1 | 1861 222 | 1861 222 | ---- --- | 1960 092 | ---- --- |
| | Left | 1 | 1861 223 | 1861 223 | ---- --- | 1960 093 | ---- --- |
| | Sp. Cl. Cp. Lower, Right | 1 | ---- --- | ---- --- | 1878 444 | 1878 444 | ---- --- |
| | Left | 1 | ---- --- | ---- --- | 1878 445 | 1878 445 | ---- --- |
| | 4 D., Sp. 4 D. Right | 1 | ---- --- | ---- --- | ---- --- | ---- --- | 1877 492 |
| | Left | 1 | ---- --- | ---- --- | ---- --- | ---- --- | 1877 493 |
| | Sp. Cl. Cp. Right | 1 | ---- --- | ---- --- | ---- --- | ---- --- | 1877 742 |
| | Sp. Cl. Cp. Left | 1 | ---- --- | ---- --- | ---- --- | ---- --- | 1877 743 |
| 23-34-304 | REINFORCEMENT, Roof Rear Extension | | | | | | |
| | Panel, 4D., Sp. 4D., PY1-H, Upper | 1 | ---- --- | ---- --- | ---- --- | ---- --- | *1961 511 |
| | Lower | 1 | ---- --- | ---- --- | ---- --- | ---- --- | 1961 513 |
| 23-34-307 | ORNAMENT, Roof | | | | | | |
| | 4 D., Sp. 4 D., D3-H, D4-H, Air Exhaust | | | | | | |
| | PKG. Right | 1 | ---- --- | 2196 268 | ---- --- | ---- --- | ---- --- |
| | Left | 1 | ---- --- | 2196 269 | ---- --- | ---- --- | ---- --- |
| | SCREW | 4 | ---- --- | 156 771 | ---- --- | ---- --- | ---- --- |
| | WASHER | 4 | ---- --- | 1439 256 | ---- --- | ---- --- | ---- --- |
| | NUT | 4 | ---- --- | 441 253 | ---- --- | ---- --- | ---- --- |
| 23-34-334 | MEDALLION, Roof Panel Outside Side | | | | | | |
| | 4 D., Sp. 4 D., Y1-H, PKG. w/BASE | 2 | ---- --- | ---- --- | ---- --- | ---- --- | 2196 813 |
| | CLIP | 2 | ---- --- | ---- --- | ---- --- | ---- --- | 6006 030 |
| | ORNAMENT, Quarter Panel Outside | | | | | | |
| | except Cv. Cp., Sp. Cl. Cp., Sp. 4 D., PKG. | 2 | 2084 564 | ---- --- | ---- --- | ---- --- | ---- --- |
| | NUT | 4 | 6006 264 | ---- --- | ---- --- | ---- --- | ---- --- |
| | CLIP | 4 | 6000 752 | ---- --- | ---- --- | ---- --- | ---- --- |
| | Except Cv. Cp., 2 D. Sub., PKG. Right | 1 | 2084 735 | ---- --- | ---- --- | ---- --- | ---- --- |
| | Left | 1 | 2084 736 | ---- --- | ---- --- | ---- --- | ---- --- |
| | NUT | 4 | 6006 264 | ---- --- | ---- --- | ---- --- | ---- --- |
| | CLIP | 4 | 6000 752 | ---- --- | ---- --- | ---- --- | ---- --- |
| | Cl. Sed., Sp. Cl. Cp., Cv. Cp., D3, D4, PKG. | 2 | ---- --- | 2196 298 | ---- --- | ---- --- | ---- --- |
| | NUT | 2 | ---- --- | 6006 264 | ---- --- | ---- --- | ---- --- |
| | RING, Quarter Panel Medallion Base Inner, | | | | | | |
| | Sp. Cl. Cp., Cv. Cp., 4 D., Sp. 4 D., 4 D. | | | | | | |
| | Sub., P2-H PKG. | 2 | 2196 724 | ---- --- | ---- --- | ---- --- | ---- --- |
| | CLIP | 3 | 6000 752 | ---- --- | ---- --- | ---- --- | ---- --- |
| | NUT | 3 | 6006 264 | ---- --- | ---- --- | ---- --- | ---- --- |
| | MEDALLION, Quarter Outside Panel | | | | | | |
| | 4 D., Sp. 4 D., Sp. Cl. Cp., Cl. Sed., | | | | | | |
| | Cv. Cp., Sub., D1, D2, PKG. Right | 1 | ---- --- | *2196 404 | ---- --- | ---- --- | ---- --- |
| | Left | 1 | ---- --- | 2196 405 | ---- --- | ---- --- | ---- --- |
| | CLIP | 8 | ---- --- | 6000 050 | ---- --- | ---- --- | ---- --- |
| | Sp. Cl. Cp., Cv. Cp., C3-300 "300F" | 2 | ---- --- | ---- --- | ---- --- | 1961 141 | ---- --- |
| | NUT | 4 | ---- --- | ---- --- | ---- --- | 6006 215 | ---- --- |
| | PY1-M PKG. | 2 | ---- --- | ---- --- | ---- --- | ---- --- | 2196 872 |
| | CLIP | 2 | ---- --- | ---- --- | ---- --- | ---- --- | 6006 468 |
| | LOUVER, Quarter Panel Outside | | | | | | |
| | C3, PKG. Right | 1 | ---- --- | ---- --- | ---- --- | 2196 599 | ---- --- |
| | Left | 1 | ---- --- | ---- --- | ---- --- | 2196 725 | ---- --- |
| | NUT and SEAL | 36 | ---- --- | ---- --- | ---- --- | 152 259 | ---- --- |
| 23-34-338 | PLATE, Roof Panel Side Medallion | | | | | | |
| | 4 D., Sp. 4 D. | 2 | ---- --- | ---- --- | ---- --- | ---- --- | 1961 305 |



MyMopar.com

| CODE | REMARKS | | PER CAR | PLYMOUTH | DODGE | DESOTO | CHRYSLER | IMPERIAL |
|---|---|---|---|---|---|---|---|---|
| **23-34-0 BODY PANELS - Cont'd** | | | | | | | | |
| 23-34-339 | ESCUTCHEON, Quarter Panel Outside Louver C3 | Right | 9 | ---- --- | ---- --- | ---- --- | 2093 360 | ---- --- |
| | | Left | 9 | ---- --- | ---- --- | ---- --- | 2093 361 | ---- --- |
| 23-34-340 | MEDALLION and BASE, Quarter Panel Sp. Cl. Cp., Cv. Cp., 4 D., Sp. 4 D., P1-H, P2-H, PKG., | Right | 1 | ⊟2275 037 | ---- --- | ---- --- | ---- --- | ---- --- |
| | | Left | 1 | ⊟2275 038 | ---- --- | ---- --- | ---- --- | ---- --- |
| | NUT | | 6 | 6006 264 | ---- --- | ---- --- | ---- --- | ---- --- |
| | 4D. Sub., P1-H, P2-H, Pkg., | Right | 1 | ⊟2275 039 | ---- --- | ---- --- | ---- --- | ---- --- |
| | | Left | 1 | ⊟2275 040 | ---- --- | ---- --- | ---- --- | ---- --- |
| | NUT | | 6 | *6006 264 | ---- --- | ---- --- | ---- --- | ---- --- |
| | Sp. Cl. Cp., Cv. Cp. C3-300, Base PKG. | | 2 | ---- --- | ---- --- | ---- --- | 2196 575 | ---- --- |
| | NUT | | 4 | ---- --- | ---- --- | ---- --- | 6006 215 | ---- --- |
| 23-34-342 | SPACER, Quarter Panel Outside Finish Top Rear Ornament Rear Screw | | | | | | | |
| | 4D. Sub., Sp. 4D. Sub., | | 2 | ---- --- | *1961 944 | ---- --- | ---- --- | ---- --- |
| 23-34-354 | PANEL, Windshield Header Cv. Cp. | w/REINFORCEMENT | 1 | 1963 627 | 1963 627 | ---- --- | 1963 627 | ---- --- |
| | PANEL, Reinforcement and Frame, Windshield Upper, except Cv. Cp. | | 1 | 1909 319 | 1909 319 | 1909 319 | 1909 319 | ---- --- |
| **23-36-0 PILLAR** | | | | | | | | |
| 23-36-5 | PILLAR, Body Center 4 D. | Right | 1 | 1909 892 | 1909 892 | 1909 892 | 1909 892 | 1973 132 |
| | | Left | 1 | 1909 893 | 1909 893 | 1909 893 | 1909 893 | 1973 133 |
| | Sp. 4 D., Sp. 4 D. Sub. | Right | 1 | 1952 204 | 1952 204 | 1952 204 | 1952 204 | 1973 290 |
| | | Left | 1 | 1952 205 | 1952 205 | 1952 205 | 1952 205 | 1973 291 |
| | 4 D. Sub. | Right | 1 | 1909 892 | 1909 892 | ---- --- | ---- --- | ---- --- |
| | | Left | 1 | 1909 893 | 1909 893 | ---- --- | ---- --- | ---- --- |
| 23-36-6 | PANEL, Center Pillar Trim 4 D., 4 D. Sub. | Prime, Right | 1 | 1882 884 | 1882 884 | 1882 884 | 1882 884 | ---- --- |
| | | Left | 1 | 1882 885 | 1882 885 | 1882 885 | 1882 885 | ---- --- |
| | 4 D. | Upper, Right | 1 | ---- --- | ---- --- | ---- --- | ---- --- | 1766 514 |
| 23-36-11 | PLATE, Body Center Pillar Upper Hinge Reinforcement Back-Up D3, D4, 4 D. Taxi | | 1 | 1963 635 | 1963 635 | ---- --- | ---- --- | ---- --- |
| 23-36-18 | PLUG, Body Pillar Hole w/o Auto. Door Switch | | ★ | 6013 105 | 6013 105 | 6013 105 | 6013 105 | ---- --- |
| 23-36-21 | COVER, Pillar Hinge 4 D., Sp. 4 D. | Center | 4 | ---- --- | ---- --- | ---- --- | ---- --- | 1751 793 |
| 23-36-22 | PLATE, Body Center Pillar Front Tapping 4D., Sp. 4D., Sub. | | 2 | ⊟1952 214 | ⊟1952 214 | ⊟1952 214 | ⊟1952 214 | ---- --- |
| 23-36-53 | PILLAR, Body Lock, Rear Sp. Cl. Cp. | Right | 1 | 1869 772 | 1869 772 | ---- --- | ---- --- | ---- --- |
| | | Left | 1 | 1869 773 | 1869 773 | ---- --- | ---- --- | ---- --- |
| | Cv. Cp. | Right | 1 | 1954 676 | 1954 676 | ---- --- | ---- --- | ---- --- |
| | | Left | 1 | 1954 677 | 1954 677 | ---- --- | ---- --- | ---- --- |
| | 4 D., Sp. 4 D. | Right | 1 | 1869 770 | ---- --- | ---- --- | ---- --- | ---- --- |
| | | Left | 1 | 1869 771 | ---- --- | ---- --- | ---- --- | ---- --- |
| | 4 D., Sp. 4 D., D1, D2 | w/Tapping PLATE, Right | 1 | 1964 418 | 1973 044 | ---- --- | ---- --- | ---- --- |
| | | Left | 1 | 1964 419 | 1973 045 | ---- --- | ---- --- | ---- --- |
| | 4 D., Sp. 4 D., D3, D4 | w/Tapping PLATE, Right | 1 | ---- --- | 1964 422 | 1973 042 | 1973 042 | ---- --- |
| | | Left | 1 | ---- --- | 1964 423 | 1973 043 | 1973 043 | ---- --- |
| | Sp. 4 D. Sub. | w/Tapping PLATE, Right | 1 | ---- --- | ---- --- | ---- --- | 1973 042 | ---- --- |
| | | Left | 1 | ---- --- | ---- --- | ---- --- | 1973 043 | ---- --- |
| | 4 D. Sub., Sp. 4 D. Sub. | w/Tapping PLATE, Right | 1 | 1964 420 | 1964 420 | ---- --- | ---- --- | ---- --- |
| | | Left | 1 | 1964 421 | 1964 421 | ---- --- | ---- --- | ---- --- |
| | Cl. Sed., 2 D. Sub. | Upper Right | 1 | 1884 700 | 1884 700 | ---- --- | ---- --- | ---- --- |
| | | Left | 1 | 1884 701 | 1884 701 | ---- --- | ---- --- | ---- --- |
| | Cl. Sed., 2 D. Sub., D3, D4 | Lower, Right | 1 | 1869 774 | 1869 774 | ---- --- | ---- --- | ---- --- |
| | | Left | 1 | 1869 775 | 1869 775 | ---- --- | ---- --- | ---- --- |
| | 4 D. Sub., Sp. 4 D. Sub. | Right | 1 | 1884 730 | 1884 730 | ---- --- | ---- --- | ---- --- |
| | | Left | 1 | 1884 731 | 1884 731 | ---- --- | ---- --- | ---- --- |

★ Indicates use as required.
⊟ Indicates parts not listed in any previous parts book.
* Indicates change or addition.



Printed in U.S.A.
Prices and specifications subject to change without notice.
Dec. 9, 1960 Supersedes April 20, 1960.

MyMopar.com

| CODE | REMARKS | | PER CAR | PLYMOUTH | DODGE | DESOTO | CHRYSLER | IMPERIAL |
|---|---|---|---|---|---|---|---|---|
| **23-36-0 PILLAR-Cont'd** | | | | | | | | |
| 23-36-53 | PILLAR - Cont'd | | | | | | | |
| | 4 D., Sp. 4 D., D1, D2 | Right | 1 | ---- --- | 1884 730 | ---- --- | ---- --- | ---- --- |
| | | Left | 1 | ---- --- | 1884 731 | ---- --- | ---- --- | ---- --- |
| | Sp. Cl. Cp., w/REINFORCEMENT and Tapping PLATE | Right | 1 | ---- --- | ---- --- | 1952 332 | 1952 332 | ---- --- |
| | | Left | - | ---- --- | ---- --- | 1952 333 | 1952 333 | ---- --- |
| | Cv. Cp., w/REINFORCEMENT and Tapping PLATE | Right | 1 | ---- --- | ---- --- | ---- --- | 1954 814 | ---- --- |
| | | Left | 1 | ---- --- | ---- --- | ---- --- | 1954 815 | ---- --- |
| | Sp. Cl. Cp., Cv. Cp. | Right | 1 | ---- --- | ---- --- | ---- --- | ---- --- | 1877 314 |
| | | Left | 1 | ---- --- | ---- --- | ---- --- | ---- --- | 1877 315 |
| | 4 D., Sp. 4 D. | Right | 1 | ---- --- | ---- --- | ---- --- | ---- --- | 1877 310 |
| | | Left | 1 | ---- --- | ---- --- | ---- --- | ---- --- | 1877 311 |
| | Sp. Cl. Cp., Cv. Cp., w/Tapping PLATE and COVERS | Right | 1 | ---- --- | ---- --- | ---- --- | ---- --- | 1919 024 |
| | | Left | 1 | ---- --- | ---- --- | ---- --- | ---- --- | 1919 025 |
| 23-36-66 | REINFORCEMENT, Body Lock Pillar | | | | | | | |
| | 4 D., P1-M, P2-M | Upper Right | 1 | 1884 532 | ---- --- | ---- --- | ---- --- | ---- --- |
| | | Left | 1 | 1884 533 | ---- --- | ---- --- | ---- --- | ---- --- |
| | Cl. Sed., 2 D. Sub. | Upper, Right | 1 | 1884 532 | 1884 532 | ---- --- | ---- --- | ---- --- |
| | | Left | 1 | 1884 533 | 1884 533 | ---- --- | ---- --- | ---- --- |
| | Sp. Cl. Cp., Cv. Cp., | Rear Right | 1 | ---- --- | ---- --- | ---- --- | ---- --- | 1690 440 |
| | | Left | 1 | ---- --- | ---- --- | ---- --- | ---- --- | 1690 441 |
| 23-36-73 | COVER, Lock Pillar Hole Edge Outer | | | | | | | |
| | Sp. Cl. Cp., Cv. Cp., | Right | 1 | ---- --- | ---- --- | ---- --- | ---- --- | *1810 586 |
| | | Left | 1 | ---- --- | ---- --- | ---- --- | ---- --- | *1810 587 |
| 23-36-118 | PILLAR, Body Rear | | | | | | | |
| | 2 D. Sub., 4 D. Sub., Upper and Lower, w/Glass RUN and REINFORCEMENT | Right | 1 | 1973 174 | ---- --- | ---- --- | ---- --- | ---- --- |
| | | Left | 1 | 1973 175 | ---- --- | ---- --- | ---- --- | ---- --- |
| | 4 D. Sub., Sp. 4 D. Sub., Upper and Lower, w/Glass RUN and REINFORCEMENTS | Right | 1 | ---- --- | 1973 174 | ---- --- | 1973 174 | ---- --- |
| | | Left | 1 | ---- --- | 1973 175 | ---- --- | 1973 175 | ---- --- |
| 23-36-121 | PANEL, Rear Upper Pillar to Side and Rear Roof Rail Joint Cover, Sub. | Right | 1 | 1878 254 | 1878 254 | ---- --- | 1878 254 | ---- --- |
| | | Left | 1 | 1878 255 | 1878 255 | ---- --- | 1878 255 | ---- --- |
| 23-36-123 | HANDLE, Roof Panel Rear Pillar Outside Assist | | | | | | | |
| | 4 D. Sub., Sp. 4 D. Sub., PKG. | | 2 | 2196 839 | 2196 839 | ---- --- | 2196 839 | ---- --- |
| | NUT | | 8 | 6006 035 | 6006 035 | ---- --- | 6006 035 | ---- --- |
| | BOLT | | 2 | 681 135 | 681 135 | ---- --- | 681 135 | ---- --- |
| 23-36-125 | REINFORCEMENT, Rear Pillar to Wheelhouse Sub. | Right | 1 | 1877 840 | 1877 840 | ---- --- | 1877 840 | ---- --- |
| | | Left | 1 | 1877 841 | 1877 841 | ---- --- | 1877 841 | ---- --- |
| 23-36-128 | BOLT, Roof Panel Rear Pillar Outside Assist Handle Attaching, Sub. | | 2 | 681 135 | 681 135 | ---- --- | 681 135 | ---- --- |
| **23-38-0 FLOOR TUNNEL CONSOLE** | | | | | | | | |
| 23-38-4 | NUT, Floor Tunnel Console Access Door Attaching, C3-300 | | 4 | ---- --- | ---- --- | ---- --- | 6022 003 | ---- --- |
| 23-38-5 | PLATE, Floor Tunnel Console Finish C3-300 | Front | 1 | ---- --- | ---- --- | ---- --- | 2161 021 | ---- --- |
| | | Rear | 1 | ---- --- | ---- --- | ---- --- | 2161 022 | ---- --- |
| 23-38-9 | FILLER, Front Floor Tunnel Console to Instrument Panel, C3-300 | | 1 | ---- --- | ---- --- | ---- --- | 2161 041 | ---- --- |
| 23-38-12 | BASE, Floor Tunnel Console Arm Rest C3-300 | | 2 | ---- --- | ---- --- | ---- --- | B2241 393 | ---- --- |
| 23-38-14 | HINGE, Floor Tunnel Console Arm Rest Lid C3-300 | | 2 | ---- --- | ---- --- | ---- --- | 2161 038 | ---- --- |
| 23-38-16 | REINFORCEMENT, Heel Pad Finish Plate Front, C3-300 | | 2 | ---- --- | ---- --- | ---- --- | 2086 461 | ---- --- |
| 23-38-17 | PLATE, Heel Pad Finish Front, C3-300 | | 2 | ---- --- | ---- --- | ---- --- | 2086 460 | ---- --- |
| 23-38-19 | BALL STUD, Floor Tunnel Console Arm Rest Lid Lock, C3-300 | | 2 | ---- --- | ---- --- | ---- --- | ---- --- | B2086 840 |

★ Indicates use as required.
B Indicates parts not listed in any previous parts book.
Dec. 9, 1960 Supersedes April 20, 1960.



Printed in U.S.A.
Prices and specifications subject to change without notice.
* Indicates change or addition.
MyMopar.com

| CODE | REMARKS | PER CAR | PLYMOUTH | DODGE | DESOTO | CHRYSLER | IMPERIAL |
|---|---|---|---|---|---|---|---|
| **23-38-0 FLOOR TUNNEL CONSOLE - Cont'd** | | | | | | | |
| 23-38-20 | BRACKET, Floor Tunnel Console Arm Rest Lid Stud Mounting, C3-300 | 2 | ---- --- | ---- --- | ---- --- | ---- --- | ⊟2086 839 |
| 23-38-23 | CABLE, Floor Console Arm Rest Lid Check C3-300 | 2 | ---- --- | ---- --- | ---- --- | 1909 425 | ---- --- |
| 23-38-24 | NUT, Floor Tunnel Console Arm Rest Lid Check Stamp Attaching C3-300 | 1 | ---- --- | ---- --- | ---- --- | 6022 151 | ---- --- |
| **23-39-0 WINDOW LIFT (MANUAL)** | | | | | | | |
| 23-39-2 | SPRING, Door Manual Window Regulator except Sp. 4 D., Sp. 4 D. Sub., C1, C2 | ★ | 1256 337 | 1256 337 | 1256 337 | 1256 337 | 1256 337 |
| | Sp. 4 D., Sp. 4 D. Sub., C1, C2 Front | 2 | 1256 337 | 1256 337 | 1256 337 | 1256 337 | 1256 337 |
| | Rear | 2 | 1690 329 | 1690 329 | 1690 329 | 1690 329 | ---- --- |
| 23-39-5 | REGULATOR or PLATE and LINK, Door Manual Window | | | | | | |
| | 4 D., Sp. 4 D., 4 D. Sub., Sp. 4 D. Sub., C1, C2 Front Right | 1 | 1954 346 | 1954 346 | 1954 346 | 1954 346 | 2093 486 |
| | Left | 1 | 1954 347 | 1954 347 | 1954 347 | 1954 347 | 2093 487 |
| | 4 D., 4 D. Sub., C1, C2 Rear Right | 1 | 1883 568 | 1883 568 | 1883 568 | 1883 568 | 2093 446 |
| | Left | 1 | 1883 569 | 1883 569 | 1883 569 | 1883 569 | 2093 447 |
| | Sp. 4 D., Sp. 4 D. Sub., C1, C2 Rear Right | 1 | 1883 494 | 1883 494 | 1883 494 | 1883 494 | 2093 446 |
| | Left | 1 | 1883 495 | 1883 495 | 1883 495 | 1883 495 | 2093 447 |
| | Sp. Cl. Cp., Cv. Cp., Cl. Sed., 2 D. Sub., C1, C2 Right | 1 | 1954 348 | 1954 348 | 1954 348 | 1954 348 | 2093 456 |
| | Left | 1 | 1954 349 | 1954 349 | 1954 349 | 1954 349 | 2093 457 |
| 23-39-6 | SCREW and WASHER, Window Regulator Attaching | ★ | 2165 287 | 2165 287 | 2165 287 | 2165 287 | ---- --- |
| | SCREW, Window Regulator Arm Roller Stud | ★ | ---- --- | ---- --- | ---- --- | ---- --- | 6006 172 |
| 23-39-8 | RING, Manual Window Regulator Retaining, C1, C2 Doors | ★ | 2165 355 | 2165 355 | 2165 355 | 2165 355 | ---- --- |
| | Quarter | 2 | 2165 355 | 2165 355 | 2165 355 | 2165 355 | ---- --- |
| 23-39-10 | SPRING NUT, Window Regulator Link and Mounting Plate | ★ | ⊟6022 287 | ⊟6022 287 | ⊟6022 287 | ⊟6022 287 | ---- --- |
| 23-39-11 | BOLT, Manual Window Regulator Arm and Link to Door Pivot | ★ | 6000 211 | 6000 211 | 6000 211 | 6000 211 | 6006 239 |
| 23-39-12 | WASHER, Window Regulator Arm and Link Mounting Plate | ★ | 6000 141 | 6000 141 | 6000 141 | 6000 141 | ---- --- |
| 23-39-15 | STOP, Rear Door Manual Window Regulator Pivot Arm, Sp. 4 D. | 2 | ---- --- | ---- --- | ---- --- | ---- --- | 1751 732 |
| 23-39-17 | BUSHING, Window Regulator Stud Door and Quarter | ★ | 2166 511 | 2166 511 | 2166 511 | 2166 511 | ---- --- |
| 23-39-18 | ARM and LINK, Door Manual Window Regulator Pivot, 4 D., Sp. 4 D., Sub., C1, C2 includes Mounting Plate, Front Right | 1 | 1954 342 | 1954 342 | 1954 342 | 1954 342 | ---- --- |
| | Left | 1 | 1954 343 | 1954 343 | 1954 343 | 1954 343 | ---- --- |
| | Front Right | 1 | ---- --- | ---- --- | ---- --- | ---- --- | 1692 154 |
| | Left | 1 | ---- --- | ---- --- | ---- --- | ---- --- | 1692 155 |
| | 4 D. Rear Right | 1 | ---- --- | ---- --- | ---- --- | ---- --- | 2093 104 |
| | Left | 1 | ---- --- | ---- --- | ---- --- | ---- --- | 2093 105 |
| | Sp. 4 D. Rear Right | 1 | ---- --- | ---- --- | ---- --- | ---- --- | 1750 426 |
| | Left | 1 | ---- --- | ---- --- | ---- --- | ---- --- | 1750 427 |
| | Sp. Cl. Cp., Cv. Cp., Cl. Sed., C1, C2 includes Mounting Plate, Right | 1 | 1954 342 | 1954 342 | 1954 342 | 1954 342 | ---- --- |
| | Left | 1 | 1954 343 | 1954 343 | 1954 343 | 1954 343 | ---- --- |
| | Right | 1 | ---- --- | ---- --- | ---- --- | ---- --- | 1750 466 |
| | Left | 1 | ---- --- | ---- --- | ---- --- | ---- --- | 1750 467 |
| 23-39-33 | STUD, Window Regulator Arm Glass Lower Channel Roller, All | 8 | ---- --- | ---- --- | ---- --- | ---- --- | 1691 100 |
| 23-39-34 | REGULATOR, Quarter Manual Window Sp. Cl. Cp., C1, C2 Right | 1 | 1884 492 | 1884 492 | 1884 492 | 1884 492 | 1651 416 |
| | Left | 1 | 1884 493 | 1884 493 | 1884 493 | 1884 493 | 1651 417 |
| | Cv. Cp., C1, C2 Right | 1 | 1884 494 | 1884 494 | ---- --- | 1884 494 | ---- --- |
| | Left | 1 | 1884 495 | 1884 495 | ---- --- | 1884 495 | ---- --- |
| | Cl. Sed., 2 D. Sub. Right | 1 | 1884 490 | 1884 490 | ---- --- | ---- --- | ---- --- |
| | Left | 1 | 1884 491 | 1884 491 | ---- --- | ---- --- | ---- --- |

★ Indicates use as required.
⊟ Indicates parts not listed in any previous parts book.
* Indicates change or addition.



MyMopar.com

| CODE | REMARKS | PER CAR | PLYMOUTH | DODGE | DESOTO | CHRYSLER | IMPERIAL |
|---|---|---|---|---|---|---|---|
| **23-39-0 WINDOW LIFT (MANUAL) - Cont'd** | | | | | | | |
| 23-39-36 | SCREW and WASHER, Quarter Window Regulator Attaching, Sp.Cl.Cp., C1, C2 | 12 | 6000 704 | 6000 704 | 6000 704 | 6000 704 | ---- --- |
| 23-39-44 | SPRING, Quarter Manual Window Regulator Sp.Cl.Cp., C1, C2 | 2 | 1690 329 | 1690 329 | 1690 329 | 1690 329 | ---- --- |
| | Cv.Cp., Cl.Sed., 2 D.Sub., C1, C2 | 2 | 1256 337 | 1256 337 | 1256 337 | 1256 337 | ---- --- |
| 23-39-45 | ROLLER, Window Regulator Arm Glass Lower Channel, All | 8 | ---- --- | ---- --- | ---- --- | ---- --- | 1690 937 |
| 23-39-47 | ARM and LINK, Quarter Manual Window Regulator, Sp.Cl.Cp. Right | 1 | ---- --- | ---- --- | ---- --- | ---- --- | 1691 966 |
| | Left | 1 | ---- --- | ---- --- | ---- --- | ---- --- | 1691 967 |
| 23-39-53 | RETAINER, Window Regulator Arm Stud C1, C2 | ★ | 6000 305 | 6000 305 | 6000 305 | 6000 305 | 6000 305 |
| | RETAINER, Window Regulator Guide Arm Roller Pin | | | | | | |
| | Sp. 4 D. Rear | 6 | ---- --- | ---- --- | ---- --- | ---- --- | ⊟2195 733 |
| **23-40-0 ROOF RAIL AND LUGGAGE RACK** | | | | | | | |
| 23-40-82 | SUPPORT, Rear Window Frame to Rear Headlining Bow | | | | | | |
| | 4 D., D3, D4, S3 w/High Window | 1 | 1963 464 | 1963 464 | 1963 464 | 1963 464 | ---- --- |
| | 4 D., D1, D2, C1, C2 w/Low Window | 1 | ---- --- | 1952 803 | 1952 803 | 1952 803 | ---- --- |
| | Sp. 4 D., S3 w/High Window | 1 | ---- --- | ---- --- | 1963 464 | 1963 464 | ---- --- |
| | Sp. 4 D., S1, C1, C2 w/Low Window | 1 | ---- --- | ---- --- | 1952 803 | 1952 803 | ---- --- |
| 23-40-85 | RAIL, Roof Side, 4 D., D1, D2 Right | 1 | 1959 560 | 1959 570 | 1959 570 | 1959 570 | ---- --- |
| | Left | 1 | 1959 561 | 1959 571 | 1959 571 | 1959 571 | ---- --- |
| | 4 D., D3, D4 Right | 1 | ---- --- | 1959 560 | ---- --- | ---- --- | ---- --- |
| | Left | 1 | ---- --- | 1959 561 | ---- --- | ---- --- | ---- --- |
| | 4 D. Front Inner Right | 1 | ---- --- | ---- --- | ---- --- | ---- --- | 1877 330 |
| | Left | 1 | ---- --- | ---- --- | ---- --- | ---- --- | 1877 331 |
| | Front Outer Right | 1 | ---- --- | ---- --- | ---- --- | ---- --- | 1960 540 |
| | Left | 1 | ---- --- | ---- --- | ---- --- | ---- --- | 1960 541 |
| | Rear Outer Right | 1 | ---- --- | ---- --- | ---- --- | ---- --- | 1877 328 |
| | Left | 1 | ---- --- | ---- --- | ---- --- | ---- --- | 1877 329 |
| | Sp.4D., Sp.4D. Sub., D1, D2 Right | 1 | 1959 562 | 1959 572 | 1959 572 | 1959 572 | ---- --- |
| | Left | 1 | 1959 563 | 1959 573 | 1959 573 | 1959 573 | ---- --- |
| | Sp 4 D., D3, D4 Right | 1 | ---- --- | 1959 562 | ---- --- | ---- --- | ---- --- |
| | Left | 1 | ---- --- | 1959 563 | ---- --- | ---- --- | ---- --- |
| | Sp. 4 D. Front Inner Right | 1 | ---- --- | ---- --- | ---- --- | ---- --- | 1961 064 |
| | Left | 1 | ---- --- | ---- --- | ---- --- | ---- --- | 1961 065 |
| | Front Outer Right | 1 | ---- --- | ---- --- | ---- --- | ---- --- | 1960 540 |
| | Left | 1 | ---- --- | ---- --- | ---- --- | ---- --- | 1960 541 |
| | Rear Outer Right | 1 | ---- --- | ---- --- | ---- --- | ---- --- | 1877 328 |
| | Left | 1 | ---- --- | ---- --- | ---- --- | ---- --- | 1877 329 |
| | Sp. Cl. Cp., except Fury and Polara Right | 1 | 1959 566 | 1959 566 | 1961 618 | 1961 618 | ---- --- |
| | Left | 1 | 1959 567 | 1959 567 | 1961 619 | 1961 619 | ---- --- |
| | Sp. Cl. Cp. w/High Window, Right | 1 | 1959 564 | 1959 564 | ---- --- | ---- --- | ---- --- |
| | Left | 1 | 1959 565 | 1959 565 | ---- --- | ---- --- | ---- --- |
| | Sp. Cl. Cp. Front Inner Right | 1 | ---- --- | ---- --- | ---- --- | ---- --- | 1877 768 |
| | Left | 1 | ---- --- | ---- --- | ---- --- | ---- --- | 1877 769 |
| | Rear Inner Right | 1 | ---- --- | ---- --- | ---- --- | ---- --- | 1877 450 |
| | Left | 1 | ---- --- | ---- --- | ---- --- | ---- --- | 1877 451 |
| | Front Outer Right | 1 | ---- --- | ---- --- | ---- --- | ---- --- | 1960 542 |
| | Left | 1 | ---- --- | ---- --- | ---- --- | ---- --- | 1960 543 |
| | Rear Outer Right | 1 | ---- --- | ---- --- | ---- --- | ---- --- | 1961 584 |
| | Left | 1 | ---- --- | ---- --- | ---- --- | ---- --- | 1961 585 |
| | Cl. Sed. Right | 1 | 1959 568 | 1959 568 | ---- --- | ---- --- | ---- --- |
| | Left | 1 | 1959 569 | 1959 569 | ---- --- | ---- --- | ---- --- |
| | 4 D. Sub. Right | 1 | 1959 578 | 1959 578 | ---- --- | ---- --- | ---- --- |
| | Left | 1 | 1959 579 | 1959 579 | ---- --- | ---- --- | ---- --- |
| | 2 D. Sub. Right | 1 | 1959 576 | ---- --- | ---- --- | ---- --- | ---- --- |
| | Left | 1 | 1959 577 | ---- --- | ---- --- | ---- --- | ---- --- |
| | RAIL, Roof Side Rear Sub. Right | 1 | 1961 468 | 1961 468 | ---- --- | 1961 468 | ---- --- |
| | Left | 1 | 1961 469 | 1961 469 | ---- --- | 1961 469 | ---- --- |
| | RAIL, Roof Rear, Sub. | 1 | ⊟1960 636 | ⊟1960 636 | ---- --- | ⊟1960 636 | ---- --- |



MyMopar.com

## 23-40-0 ROOF RAIL AND LUGGAGE RACK - Cont'd

| CODE | REMARKS | | PER CAR | PLYMOUTH | DODGE | DESOTO | CHRYSLER | IMPERIAL |
|---|---|---|---|---|---|---|---|---|
| 23-40-86 | REINFORCEMENT, Roof Side Rail | | | | | | | |
| | 4 D., Sp. 4 D., D1, D2 | Right | 1 | ---- --- | 1869 556 | 1869 556 | 1869 556 | ---- --- |
| | | Left | 1 | ---- --- | 1869 557 | 1869 557 | 1869 557 | ---- --- |
| | 4 D., Sp. 4 D., Cl. Sed., D3, D4 | Right | 1 | 1882 098 | 1882 098 | ---- --- | ---- --- | ---- --- |
| | | Left | 1 | 1882 099 | 1882 099 | ---- --- | ---- --- | ---- --- |
| | Sp. Cl. Cp. | Right | 1 | 1882 100 | 1882 100 | ---- --- | ---- --- | ---- --- |
| | | Left | 1 | 1882 101 | 1882 101 | ---- --- | ---- --- | ---- --- |
| | Sp. Cl. Cp. | Front Right | 1 | ---- --- | ---- --- | 1878 338 | 1878 338 | ---- --- |
| | | Left | 1 | ---- --- | ---- --- | 1878 339 | 1878 339 | ---- --- |
| | | Rear Right | 1 | ---- --- | ---- --- | 1878 340 | 1878 340 | ---- --- |
| | | Left | 1 | ---- --- | ---- --- | 1878 341 | 1878 341 | ---- --- |
| | Sub. | Right | 1 | 1869 556 | 1869 556 | ---- --- | 1869 556 | ---- --- |
| | | Left | 1 | 1869 557 | 1869 557 | ---- --- | 1869 557 | ---- --- |
| | Sub. | Rear Right | 1 | 1861 128 | 1861 128 | ---- --- | 1861 128 | ---- --- |
| | | Left | 1 | 1861 129 | 1861 129 | ---- --- | 1861 129 | ---- --- |
| | EXTENSION, Roof Side Rail Reinforcement | | | | | | | |
| | 4 D., D1, D2 | w/Low Window, Right | 1 | 1882 130 | 1882 134 | 1882 134 | 1882 134 | ---- --- |
| | | Left | 1 | 1882 131 | 1882 135 | 1882 135 | 1882 135 | ---- --- |
| | 4 D., D3, D4 | w/Low Window, Right | 1 | ---- --- | 1882 130 | ---- --- | ---- --- | ---- --- |
| | | Left | 1 | ---- --- | 1882 131 | ---- --- | ---- --- | ---- --- |
| | 4 D., S3 | w/High Window, Right | 1 | ---- --- | ---- --- | 1952 648 | ---- --- | ---- --- |
| | | Left | 1 | ---- --- | ---- --- | 1952 649 | ---- --- | ---- --- |
| | Sp. 4 D., D1, S1, C1, C2 | w/Low Window, Right | 1 | --- --- | 1882 134 | 1882 134 | 1882 134 | ---- --- |
| | | Left | 1 | ---- --- | 1882 135 | 1882 135 | 1882 135 | ---- --- |
| | D4 | w/Low Window, Right | 1 | ---- --- | 1882 130 | ---- --- | ---- --- | ---- --- |
| | | Left | 1 | ---- --- | 1882 131 | ---- --- | ---- --- | ---- --- |
| | Sp. 4 D., D3H, D4H | w/High Window, Right | 1 | 1952 706 | 1952 706 | ---- --- | ---- --- | ---- --- |
| | | Left | 1 | 1952 707 | 1952 707 | ---- --- | ---- --- | ---- --- |
| | Sp. 4 D., D1, D2, S3 | w/High Window, Right | 1 | ---- --- | 1952 648 | 1952 648 | 1952 648 | ---- --- |
| | | Left | 1 | ---- --- | 1952 649 | 1952 649 | 1952 649 | ---- --- |
| | Sub. | Right | 1 | 1960 064 | 1960 064 | ---- --- | 1960 064 | ---- --- |
| | | Left | 1 | 1960 065 | 1960 065 | ---- --- | 1960 065 | ---- --- |
| | Sp. Cl. Cp. | w/High Window, Right | 1 | 1952 676 | 1952 676 | ---- --- | ---- --- | ---- --- |
| | | Left | 1 | 1952 677 | 1952 677 | ---- --- | ---- --- | ---- --- |
| | Sp. Cl. Cp., except Polara | | | | | | | |
| | | w/Low Window, Right | 1 | 1884 538 | 1884 538 | ---- --- | ---- --- | ---- --- |
| | | Left | 1 | 1884 539 | 1884 539 | ---- --- | ---- --- | ---- --- |
| | Cl. Sed. | Right | 1 | 1882 130 | 1882 130 | ---- --- | ---- --- | ---- --- |
| | | Left | 1 | 1882 131 | 1882 131 | ---- --- | ---- --- | ---- --- |
| 23-40-92 | EXTENSION, Roof Side Rail | | | | | | | |
| | 4 D., Cl. Sed., D3, D4 | w/Low Window, Right | 1 | 1884 638 | 1884 638 | ---- --- | ---- --- | ---- --- |
| | | Left | 1 | 1884 639 | 1884 639 | ---- --- | ---- --- | ---- --- |
| | 4 D., D1, D2 | w/Low Window, Right | 1 | ---- --- | 1884 868 | 1884 868 | 1884 868 | ---- --- |
| | | Left | 1 | ---- --- | 1884 869 | 1884 869 | 1884 869 | ---- --- |
| | 4 D., S3 | w/High Window, Right | 1 | ---- --- | ---- --- | 1952 650 | ---- --- | ---- --- |
| | | Left | 1 | ---- --- | ---- --- | 1952 651 | ---- --- | ---- --- |
| | Sp. 4 D., D1, S1, C1, C2 | | | | | | | |
| | | w/Low Window, Right | 1 | ---- --- | 1884 868 | 1884 868 | 1884 868 | ---- --- |
| | | Left | 1 | ---- --- | 1884 869 | 1884 869 | 1884 869 | ---- --- |
| | Sp. 4 D., D3, D4 | w/High Window, Right | 1 | 1952 704 | 1952 704 | ---- --- | ---- --- | ---- --- |
| | | Left | 1 | 1952 705 | 1952 705 | ---- --- | ---- --- | ---- --- |
| | D1, D2, S3 | w/High Window, Right | 1 | ---- --- | 1952 650 | 1952 650 | 1952 650 | ---- --- |
| | | Left | 1 | ---- --- | 1952 651 | 1952 651 | 1952 651 | ---- --- |
| | Sp. Cl. Cp. | Right | 1 | ---- --- | ---- --- | ---- --- | ---- --- | 1810 058 |
| | | Left | 1 | ---- --- | ---- --- | ---- --- | ---- --- | 1810 059 |
| | Sub. | Right | 1 | 1961 422 | 1961 422 | ---- --- | 1961 422 | ---- --- |
| | | Left | 1 | 1961 423 | 1961 423 | ---- --- | 1961 423 | ---- --- |
| | 4 D., Sp. 4 D. | Outer, Right | 1 | ---- --- | ---- --- | ---- --- | ---- --- | 1877 408 |
| | | Left | 1 | ---- --- | ---- --- | ---- --- | ---- --- | 1877 409 |
| | EXTENSION, Roof Rail to Quarter Window Front Frame, Sub. | Right | 1 | 1961 018 | 1961 018 | ---- --- | 1961 018 | ---- --- |
| | | Left | 1 | 1961 019 | 1961 019 | ---- --- | 1961 019 | ---- --- |

NOTE: For information on special equipment rear windows see 23-64-314.



MyMopar.com

| CODE | REMARKS | PER CAR | PLYMOUTH | DODGE | DESOTO | CHRYSLER | IMPERIAL |
|---|---|---|---|---|---|---|---|
| **23-40-0 ROOF RAIL AND LUGGAGE RACK - Cont'd** | | | | | | | |
| 23-40-94 | ADAPTER, Roof Side Rear Inner Rail 4 D. Right | 1 | ---- --- | ---- --- | ---- --- | ---- --- | 1877 668 |
| | Left | 1 | ---- --- | ---- --- | ---- --- | ---- --- | 1877 669 |
| 23-40-97 | BRACE, Roof Side Rail to Wheelhouse Extension, Sp. Cl. Cp. w/High Window, Right | 1 | 1963 146 | 1963 146 | ---- --- | ---- --- | ---- --- |
| | Left | 1 | 1963 147 | 1963 147 | ---- --- | ---- --- | ---- --- |
| 23-40-150 | RAIL, Roof Luggage Rack, Sub. Side | 2 | ---- --- | 2093 387 | ---- --- | ---- --- | ---- --- |
| | Front and Rear | 2 | ---- --- | 2093 388 | ---- --- | ---- --- | ---- --- |
| 23-40-170 | SUPPORT, Roof Luggage Rack Rail, Sub., Right | 3 | ---- --- | 2093 390 | ---- --- | ---- --- | ---- --- |
| | Left | 3 | ---- --- | 2093 391 | ---- --- | ---- --- | ---- --- |
| 23-40-177 | CAP, Roof Luggage Rack Slats Frame Sub. Front | 2 | ---- --- | 2093 382 | ---- --- | ---- --- | ---- --- |
| | Rear | 2 | ---- --- | 2093 383 | ---- --- | ---- --- | ---- --- |
| 23-40-185 | FRAME, Roof Luggage Rack Slats Sub. Right | 1 | ---- --- | 2093 380 | ---- --- | ---- --- | ---- --- |
| | Left | 1 | ---- --- | 2093 381 | ---- --- | ---- --- | ---- --- |
| 23-40-187 | GASKET, Roof Luggage Rack Slats Frame Sub. | 2 | ---- --- | 2093 394 | ---- --- | ---- --- | ---- --- |
| | PAD, Roof Luggage Rack Slats, Sub. | 9 | ---- --- | 2094 874 | ---- --- | ---- --- | ---- --- |
| 23-40-190 | SLATS, Roof Luggage Rack, Sub. | 9 | ---- --- | 2093 386 | ---- --- | ---- --- | ---- --- |
| **23-41-0 WINDOW LIFT (ELECTRIC)** | | | | | | | |
| 23-41-4 | REGULATOR, Electric Window 4 D., Sp. 4 D., 4 D. Sub. Front Right | 1 | 1964 364 | 1964 364 | 1964 364 | 1964 364 | 1860 966 |
| | Left | 1 | 1964 365 | 1964 365 | 1964 365 | 1964 365 | 1860 967 |
| | 4 D., 4 D. Sub. Rear Right | 1 | 1964 362 | 1964 362 | 1964 362 | 1964 362 | 1860 962 |
| | Left | 1 | 1964 363 | 1964 363 | 1964 363 | 1964 363 | 1860 963 |
| | Sp. 4 D., Sp. 4 D. Sub. Rear Right | 1 | 1964 352 | 1964 352 | 1964 352 | 1964 352 | 1860 962 |
| | Left | 1 | 1964 353 | 1964 353 | 1964 353 | 1964 353 | 1860 963 |
| | Sp. Cl. Cp., Cv. Cp., Cl. Sed., 2 D. Sub. Door, Right | 1 | 1964 360 | 1964 360 | 1964 360 | 1964 360 | 1860 963 |
| | Left | 1 | 1964 361 | 1964 361 | 1964 361 | 1964 361 | 1860 962 |
| | Sp. Cl. Cp. Quarter, Right | 1 | 1964 356 | 1964 356 | 1964 356 | 1964 356 | 1753 706 |
| | Left | 1 | 1964 357 | 1964 357 | 1964 357 | 1964 357 | 1753 707 |
| | Cv. Cp. Quarter, Right | 1 | 1964 354 | 1964 354 | ---- --- | 1964 354 | 1753 706 |
| | Left | 1 | 1964 355 | 1964 355 | ---- --- | 1964 355 | 1753 707 |
| | Cl. Sed., 2 D. Sub. Quarter, Right | 1 | 1964 358 | 1964 358 | ---- --- | ---- --- | ---- --- |
| | Left | 1 | 1964 359 | 1964 359 | ---- --- | ---- --- | ---- --- |
| | REGULATOR, Electric Window (used in Dura Type Assembly) Sp. Cl. Cp., Cv. Cp., Cl. Sed., 2 D. Sub. Door, Right | 1 | 1964 598 | 1964 598 | 1964 598 | 1964 598 | ---- --- |
| | Left | 1 | 1964 599 | 1964 599 | 1964 599 | 1964 599 | ---- --- |
| | 4 D., Sp. 4D., Sp. 4 D. Sub Front, Right | 1 | 1964 596 | 1964 596 | 1964 596 | 1964 596 | ---- --- |
| | Left | 1 | 1964 597 | 1964 597 | 1964 597 | 1964 597 | ---- --- |
| 23-41-5 | BUS BAR, Electric Window Lift Circuit Breaker | 1 | *1498 776 | *1498 776 | *1498 776 | *1498 776 | *1498 776 |
| 23-41-7 | SPRING, Electric Window Regulator Doors | 4 | 1964 289 | 1964 289 | 1964 289 | 1964 289 | ---- --- |
| | Sp. Cl. Cp. Quarter | 2 | 1964 312 | 1964 312 | 1964 312 | 1964 312 | ---- --- |
| | Cv. Cp., Cl. Sed., 2 D. Sub. Quarter | 2 | 1964 289 | 1964 289 | ---- --- | 1964 289 | ---- --- |
| | All | 4 | ---- --- | ---- --- | ---- --- | ---- --- | 1440 596 |
| | SPRING, Electric Window Regulator (used in Dura Type Assembly) Front | 2 | 2165 768 | 2165 768 | 2165 768 | 2165 768 | ---- --- |
| | 4D., 4D. Sub. Rear | 2 | 2165 768 | 2165 768 | 2165 768 | 2165 768 | ---- --- |
| 23-41-9 | BOLT and WASHER, Electric Window Regulator | ★ | *1963 851 | *1963 851 | *1963 851 | *1963 851 | ---- --- |
| | SCREW, Electric Window Regulator Front | 4 | 1963 949 | 1963 949 | 1963 949 | 1963 949 | ---- --- |
| | STUD, Electric Window Regulator Pivot | ★ | 6000 211 | 6000 211 | 6000 211 | 6000 211 | ---- --- |
| 23-41-11 | CIRCUIT BREAKER, Electric Window Lift 30 amp. | 1 | 1689 022 | 1689 022 | 1689 022 | 1689 022 | 1689 022 |
| 23-41-12 | CLIP, Electric Window Lift Circuit Breaker Mounting | 1 | *6015 159 | *6015 159 | *6015 159 | *6015 159 | *6015 159 |
| 23-41-25 | RETAINER, Electric Window Lift Wiring Conduit Front | 2 | *1886 949 | *1886 949 | *1886 949 | *1886 949 | *1886 949 |


MyMopar.com

| CODE | REMARKS | PER CAR | PLYMOUTH | DODGE | DESOTO | CHRYSLER | IMPERIAL |
|---|---|---|---|---|---|---|---|
| **23-41-0** | **WINDOW LIFT (ELECTRIC) - Cont'd** | | | | | | |
| 23-41-29 | BRACKET, Front Door Electric Window Lift Conduit Retaining, on Front Pillar Right | 1 | 2094 422 | 2094 422 | 2094 422 | 2094 422 | 2094 422 |
| | Left | 1 | 2094 423 | 2094 423 | 2094 423 | 2094 423 | 2094 423 |
| 23-41-33 | MECHANISM, Electric Window Lift 4 D., Sp. 4 D., 4 D. Sub. Front | 2 | 1963 827 | 1963 827 | 1963 827 | 1963 827 | ---- --- |
| | Rear | 2 | 1963 828 | 1963 828 | 1963 828 | 1963 828 | ---- --- |
| | Right | 2 | ---- --- | ---- --- | ---- --- | ---- --- | 1860 942 |
| | Left | 2 | ---- --- | ---- --- | ---- --- | ---- --- | 1860 943 |
| | Sp. Cl. Cp., Cv. Cp., Cl. Sed. Door | 2 | 1963 827 | 1963 827 | 1963 827 | 1963 827 | ---- --- |
| | Door, Right | 1 | ---- --- | ---- --- | ---- --- | ---- --- | 1860 943 |
| | Left | 1 | ---- --- | ---- --- | ---- --- | ---- --- | 1860 942 |
| | Sp. Cl. Cp., Cv. Cp. Quarter | 2 | 1963 828 | 1963 828 | 1963 828 | 1963 828 | ---- --- |
| | Quarter, Right | 1 | ---- --- | ---- --- | ---- --- | ---- --- | 1819 169 |
| | Left | 1 | ---- --- | ---- --- | ---- --- | ---- --- | 1819 168 |
| | Cl. Sed. Quarter | 2 | 1963 827 | 1963 827 | ---- --- | ---- --- | ---- --- |
| 23-41-53 | BRACKET, Electric Window Regulator Mounting 4 D., Sp. 4 D., 4 D. Sub., Sp. 4 D. Sub. Front Right | 1 | 1963 874 | 1963 874 | 1963 874 | 1963 874 | ---- --- |
| | Left | 1 | 1963 875 | 1963 875 | 1963 875 | 1963 875 | ---- --- |
| | Sp. 4 D., Sp. 4 D. Sub. Rear Right | 1 | 1964 818 | 1964 818 | 1964 818 | 1964 818 | ---- --- |
| | Left | 1 | 1964 819 | 1964 819 | 1964 819 | 1964 819 | ---- --- |
| 23-41-55 | WIRING, Electric Window Lift, 4 D., 4 D. Sub. | 1 | 1971 257 | 1971 257 | 1971 257 | 1971 257 | ---- --- |
| | Sp. 4 D., Sp. 4 D. Sub. | 1 | 1971 258 | 1971 258 | 1971 258 | 1971 258 | ---- --- |
| | Sp. Cl. Cp., Cv. Cp., Cl. Sed., 2 D. Sub. | 1 | 1971 256 | 1971 256 | 1971 256 | 1971 256 | ---- --- |
| | 4 D. w/Power Vent | 1 | ---- --- | ---- --- | ---- --- | ---- --- | 2096 590 |
| | Sp. Cl. Cp., Cv. Cp. w/Power Vent | 1 | ---- --- | ---- --- | ---- --- | ---- --- | 2096 591 |
| | 4 D. w/Power Vent and Electric Door Locks | 1 | ---- --- | ---- --- | ---- --- | ---- --- | 2096 444 |
| | Sp. 4 D. w/Power Vent and Electric Door Locks | 1 | ---- --- | ---- --- | ---- --- | ---- --- | 2096 515 |
| | Sp. Cl. Cp., Cv. Cp. w/Power Vent and Electric Door Locks | 1 | ---- --- | ---- --- | ---- --- | ---- --- | 2096 514 |
| | Sp. Cl. Cp., Cv. Cp., Cl. Sed., 2 D. Sub. | 1 | 1971 256 | 1971 256 | 1971 256 | 1971 256 | 2096 787 |
| | 4 D., 4 D. Sub., Y1L, Y1M | 1 | 1971 257 | 1971 257 | 1971 257 | 1971 257 | 2096 788 |
| | Sp. 4 D., Sp. 4 D. Sub., Y1L, Y1M | 1 | 1971 258 | 1971 258 | 1971 258 | 1971 258 | 2096 786 |
| | 4 D. w/Electric Door Locks | 1 | ---- --- | ---- --- | ---- --- | ---- --- | 2096 792 |
| | Sp. 4 D. w/Electric Door Locks | 1 | ---- --- | ---- --- | ---- --- | ---- --- | 2096 790 |
| | Sp. Cl. Cp., Cv. Cp. w/Electric Door Locks | 1 | ---- --- | ---- --- | ---- --- | ---- --- | 2096 791 |
| | Sp. 4 D. w/Power Vent | 1 | ---- --- | ---- --- | ---- --- | ---- --- | 2096 589 |
| 23-41-56 | TERMINAL BLOCK, Quarter Electric Window Lift, Sp. Cl. Cp., Cv. Cp. | 2 | ---- --- | ---- --- | ---- --- | ---- --- | 913 297 |
| 23-41-58 | INSULATOR, Electric Window Lift Wiring Rear | 2 | 1843 226 | 1843 226 | 1843 226 | 1843 226 | ---- --- |
| 23-41-62 | WASHER, Electric Window Regulator Arm Stud to Glass Lower Channel | ★ | 6000 141 | 6000 141 | 6000 141 | 6000 141 | 6000 141 |
| 23-41-94 | RETAINER, Electric Window Regulator Arm Stud to Glass Lower Channel | 8 | *6000 305 | *6000 305 | *6000 305 | *6000 305 | ---- --- |
| 23-41-95 | GROMMET, Electric Window Lift Wiring Rear Door | 2 | ⊟1952 584 | ⊟1952 584 | ⊟1952 584 | ⊟1952 584 | ---- --- |
| 23-41-106 | MOTOR, Electric Window Lift 4 D., Cl. Sed., 4 D. Sub. | 4 | 2084 445 | 2084 445 | 2084 445 | 2084 445 | ---- --- |
| | Sp. 4 D., Sp. 4 D. Sub. Front | 2 | 2084 445 | 2084 445 | 2084 445 | 2084 445 | 2093 842 |
| | Rear | 2 | | | | | 2093 843 |
| | Sp. Cl. Cp., Cv. Cp. Door | 2 | 2084 445 | 2084 445 | 2084 445 | 2084 445 | 2093 842 |
| | Sp. Cl. Cp. Quarter | 2 | | | | | 2084 849 |
| | Cv. Cp. Quarter | 2 | 2084 446 | 2084 446 | ---- --- | 2084 446 | 2084 849 |
| | 4 D. Front | 2 | ---- --- | ---- --- | ---- --- | ---- --- | 2093 842 |
| | Rear | 2 | ---- --- | ---- --- | ---- --- | ---- --- | 2093 843 |
| | MOTOR, Electric Window Lift (used in Dura Type Assembly) Front Right | 1 | 2196 343 | 2196 343 | 2196 343 | 2196 343 | ---- --- |
| | Left | 1 | 2196 342 | 2196 342 | 2196 342 | 2196 342 | ---- --- |
| | Quarter, Right | 1 | 2196 343 | 2196 343 | 2196 343 | 2196 343 | ---- --- |
| | Left | 1 | 2196 342 | 2196 342 | 2196 342 | 2196 342 | ---- --- |
| | 4D., 4D. Sub. Rear, Right | 1 | 2196 343 | 2196 343 | 2196 343 | 2196 343 | ---- --- |
| | Left | 1 | 2196 342 | 2196 342 | 2196 342 | 2196 342 | ---- --- |



MyMopar.com

## 23-41-0 WINDOW LIFT (ELECTRIC) - Cont'd

| CODE | REMARKS | PER CAR | PLYMOUTH | DODGE | DESOTO | CHRYSLER | IMPERIAL |
|---|---|---|---|---|---|---|---|
| 23-41-126 | BUMPER, Electric Window Regulator Motor All | ★ | ---- --- | ---- --- | ---- --- | ---- --- | 1860 619 |
| 23-41-128 | GROMMET, Electric Window Lift Motor Mounting | | | | | | |
| | Quarter | 4 | ---- --- | ---- --- | ---- --- | ---- --- | 1383 351 |
| | GROMMET, Electric Window Lift Wiring Conduit Rear | 2 | ⊟2257 744 | ⊟2257 744 | ⊟2257 744 | ⊟2257 744 | ---- --- |
| 23-41-129 | WASHER, Electric Window Regulator Mounting | ★ | *6006 065 | *6006 065 | *6006 065 | *6006 065 | ---- --- |
| | SCREW, Electric Window Regulator Motor Strap | ★ | ---- --- | ---- --- | ---- --- | ---- --- | *6006 249 |
| 23-41-130 | LOCKWASHER, Electric Window Regulator Mounting | 16 | ---- --- | ---- --- | ---- --- | ---- --- | *6013 031 |
| 23-41-138 | SHAFT, Electric Window Lift Motor to Mechanism | | | | | | |
| | Front | 2 | 1627 108 | 1627 108 | 1627 108 | 1627 108 | 1627 108 |
| | Rear | 2 | 1688 919 | 1688 919 | 1688 919 | 1688 919 | 1688 919 |
| | Sp. Cl. Cp., Cv. Cp., Cl. Sed. Quarter | 2 | 1688 919 | 1688 919 | 1688 919 | 1688 919 | 1627 108 |
| | Coupling and Drive Cable, Electric Window Lift Motor to Mechanism (used in Dura Type Assembly) | | | | | | |
| | Front and Rear | 2 | 1810 641 | 1810 641 | 1810 641 | 1810 641 | ---- --- |
| | Quarter | 2 | 1810 641 | 1810 641 | 1810 641 | 1810 641 | ---- --- |
| 23-41-139 | SHIELD, Electric Window Lift Motor Shaft | ★ | *1689 167 | *1689 167 | *1689 167 | *1689 167 | *1689 167 |
| 23-41-167 | CONDUIT, Electric Window Lift Wiring Rear | 2 | 1971 314 | 1971 314 | 1971 314 | 1971 314 | ---- --- |
| 23-41-170 | SWITCH, Electric Window Lift | | | | | | |
| | 4 Gang, Includes BEZEL | 1 | 2096 089 | 2096 089 | 2096 089 | 2096 089 | *2096 090 |
| | Single, Includes BEZEL | 3 | 2096 399 | 2096 399 | 2096 399 | 2096 399 | 2096 765 |
| | SWITCH, Electric Window Lift Safety | 1 | 2197 404 | 2197 404 | 2197 404 | 2197 404 | 2197 404 |
| | SWITCH, Electric Window Lift and Vent Wing | | | | | | |
| | 6 Gang, Includes BEZEL | 1 | ---- --- | ---- --- | ---- --- | ---- --- | 2096 176 |
| | 2 Gang, Includes BEZEL | 1 | ---- --- | ---- --- | ---- --- | ---- --- | 2096 177 |
| 23-41-174 | SPRING, Electric Window Lift Switch Retaining | ★ | *2096 169 | *2096 169 | *2096 169 | *2096 169 | *2096 169 |
| 23-41-176 | CONNECTOR, Electric Window Lift Switch | | | | | | |
| | Single | ★ | 2096 905 | 2096 905 | 2096 905 | 2096 905 | 2096 905 |
| | 4 Way | ★ | *2096 908 | *2096 908 | *2096 908 | 2096 908 | *2096 908 |
| | 5 Way | ★ | *2096 911 | *2096 911 | *2096 911 | 2096 911 | *2096 911 |
| | CONNECTOR, Electric Window Lift Safety Switch | 1 | 1345 871 | 1345 871 | 1345 871 | 1345 871 | 1345 871 |
| 23-41-177 | TERMINAL, Electric Window Lift Safety Switch | 4 | 903 895 | 903 895 | 903 895 | 903 895 | 903 895 |
| 23-41-178 | SLEEVE, Electric Window Lift Safety Switch | 3 | 1264 933 | 1264 933 | 1264 933 | 1264 933 | 1264 933 |
| 23-41-184 | RETAINER, Electric Window Lift Switch and Bezel Left Front Door | 1 | *1769 330 | *1769 330 | *1769 330 | *1769 330 | *1769 330 |
| | Except Left Front Door | 3 | ⊟1971 478 | ⊟1971 478 | ⊟1971 478 | ⊟1971 478 | ⊟1971 478 |
| 23-41-250 | ROLLER, Electric Window Regulator Guide Arm Plate, Sp. 4 D. Rear | 6 | ---- --- | ---- --- | ---- --- | ---- --- | 2094 112 |
| 23-41-259 | WASHER, Electric Window Regulator Arm and Link Anti-Rattle | 8 | ---- --- | ---- --- | ---- --- | ---- --- | *2093 129 |
| 23-41-260 | SLEEVE, Electric Window Regulator Arm and Link Anti-Rattle | 8 | ---- --- | ---- --- | ---- --- | ---- --- | *2093 130 |
| 23-41-261 | SPRING, Electric Window Regulator Arm and Link Anti-Rattle | 8 | ---- --- | ---- --- | ---- --- | ---- --- | *2093 131 |
| 23-41-270 | HOUSING and PINION, Electric Window Regulator (used in Dura Type Assembly) | | | | | | |
| | 9 Teeth, Front Right | 1 | 2165 680 | 2165 680 | 2165 680 | 2165 680 | ---- --- |
| | Left | 1 | 2165 681 | 2165 681 | 2165 681 | 2165 681 | ---- --- |
| | 4D., 4D. Sub. Rear Right | 1 | 2165 680 | 2165 680 | 2165 680 | 2165 680 | ---- --- |
| | Left | 1 | 2165 681 | 2165 681 | 2165 681 | 2165 681 | ---- --- |
| | 6 Teeth, Quarter Right | 1 | 2165 718 | 2165 718 | 2165 718 | 2165 718 | ---- --- |
| | Left | 1 | 2165 719 | 2165 719 | 2165 719 | 2165 719 | ---- --- |
| 23-41-273 | BUSHING or BEARING, Electric Window Lift Mechanism Gear Shaft (used in Dura Type Assembly) Outer | 2 | *1810 635 | *1810 635 | *1810 635 | *1810 635 | ---- --- |
| | Inner | 2 | *1810 648 | *1810 648 | *1810 648 | *1810 648 | ---- --- |



MyMopar.com

| CODE | REMARKS | PER CAR | PLYMOUTH | DODGE | DESOTO | CHRYSLER | IMPERIAL |
|---|---|---|---|---|---|---|---|
| **23-41-0 WINDOW LIFT (ELECTRIC) - Cont'd** | | | | | | | |
| 23-41-281 | BRACE, Door Inside Panel Electric Window Regulator Lower | | | | | | |
| | Sp. Cl. Cp., Cv. Cp., Cl. Sed. | 2 | 1964 821 | 1964 821 | 1964 821 | 1964 821 | ---- --- |
| | 4 D., Sp. 4 D., 4 D. Sub., Sp. 4 D. Sub. | 2 | 1964 823 | 1964 823 | 1964 823 | 1964 823 | ---- --- |
| | REINFORCEMENT, Rear Door Inside Panel Electric Window Regulator | | | | | | |
| | 4 D., 4 D. Sub. Upper, Right | 1 | 1964 690 | 1964 690 | 1964 690 | 1964 690 | ---- --- |
| | Left | 1 | 1964 691 | 1964 691 | 1964 691 | 1964 691 | ---- --- |
| | Front, Right | 1 | 1964 696 | 1964 696 | 1964 696 | 1964 696 | ---- --- |
| | Left | 1 | 1964 697 | 1964 697 | 1964 697 | 1964 697 | ---- --- |
| **23-42-0 WINDOW GLASS RUN** | | | | | | | |
| 23-42-13 | RUN, Door Window Glass Division Channel | | | | | | |
| | 4 D. Right | 1 | ---- --- | ---- --- | ---- --- | ---- --- | 1877 562 |
| | Left | 1 | ---- --- | ---- --- | ---- --- | ---- --- | 1877 563 |
| | Sp. 4 D., Sp. Cl. Cp., Cv. Cp. Right | 1 | ---- --- | ---- --- | ---- --- | ---- --- | 2093 836 |
| | Left | 1 | ---- --- | ---- --- | ---- --- | ---- --- | 2093 837 |
| 23-42-16 | RUN, Front Door Window Glass | | | | | | |
| | 4 D., 4 D. Sub. | 2 | 2165 492 | 2165 492 | 2165 492 | 2165 492 | ---- --- |
| | 4 D. Upper | 2 | ---- --- | ---- --- | ---- --- | ---- --- | 1961 541 |
| | Rear | 2 | ---- --- | ---- --- | ---- --- | ---- --- | 1751 538 |
| | RUN, Door Window Glass, Cl. Sed., 2 D. Sub. | 2 | 2165 492 | 2165 492 | ---- --- | ---- --- | ---- --- |
| 23-42-23 | RUN, Rear Door Window Glass | | | | | | |
| | 4 D., 4 D. Sub. | 2 | 2165 492 | 2165 492 | 2165 492 | 2165 492 | 2093 440 |
| 23-42-26 | RETAINER, Front Door Window Glass Run | | | | | | |
| | 4 D., 4 D. Sub., Cl. Sed., 2 D. Sub. Right | 1 | 1952 378 | 1952 378 | 1952 378 | 1952 378 | ---- --- |
| | Left | 1 | 1952 379 | 1952 379 | 1952 379 | 1952 379 | ---- --- |
| | RETAINER, Rear Door Window Glass Run | | | | | | |
| | 4 D., 4 D. Sub. Right | 1 | 1954 144 | 1954 144 | 1954 144 | 1954 144 | ---- --- |
| | Left | 1 | 1954 145 | 1954 145 | 1954 145 | 1954 145 | ---- --- |
| 23-42-38 | RUN, Quarter Window Glass | | | | | | |
| | Cl. Sed., 2 D. Sub. | 2 | 2165 492 | 2165 492 | ---- --- | ---- --- | ---- --- |
| | Sp. Cl. Cp. Roof Side Rail, Right | 1 | ---- --- | ---- --- | ---- --- | ---- --- | 2094 154 |
| | Left | 1 | ---- --- | ---- --- | ---- --- | ---- --- | 2094 155 |
| 23-42-46 | RUN, Tailgate Window Glass | | | | | | |
| | Sub. In Tailgate | 2 | 1961 556 | 1961 556 | ---- --- | 1961 556 | ---- --- |
| | On Body | 1 | 1961 555 | 1961 555 | ---- --- | 1961 555 | ---- --- |
| 23-42-56 | RETAINER, Quarter Window Glass Run | | | | | | |
| | Cl. Sed., 2 D. Sub. Right | 1 | 1909 386 | 1909 386 | ---- --- | ---- --- | ---- --- |
| | Left | 1 | 1909 387 | 1909 387 | ---- --- | ---- --- | ---- --- |
| 23-42-57 | FILLER, Quarter Window Glass Run to Roof | | | | | | |
| | Rear Side Rail, Rubber, Sp. Cl. Cp. Right | 1 | ---- --- | ---- --- | ---- --- | ---- --- | 2094 156 |
| | Left | 1 | ---- --- | ---- --- | ---- --- | ---- --- | 2094 157 |
| **23-45-0 FRONT SEAT** | | | | | | | |
| 23-45-11 | WASHER, Swivel Seat Upper Frame Lower Pivot Arm | 2 | 2094 167 | 2094 167 | 2094 167 | 2094 167 | 2094 167 |
| | WASHER, Swivel Seat Upper Frame Lower Pivot Bracket | 2 | 2094 168 | 2094 168 | 2094 168 | 2094 168 | 2094 168 |
| 23-45-12 | ROLLER, Swivel Seat Cushion Frame Pivot Track | 4 | *1918 529 | *1918 529 | *1918 529 | *1918 529 | *1918 529 |
| 23-45-17 | BRACKET, Swivel Seat Adjuster Stabilizer to Floor Mounting | 1 | ⊟2161 057 | ⊟2161 057 | ⊟2161 057 | ⊟2161 057 | ---- --- |
| 23-45-18 | FRAME, Swivel Seat Lower | | | | | | |
| | w/Manual Seat Adjuster | 1 | 2092 230 | 2092 230 | 2092 230 | 2092 230 | 2092 230 |
| | w/Electric Seat Adjuster | 1 | 2092 231 | 2092 231 | 2092 231 | 2092 231 | 2092 231 |
| | C3-300 w/Manual Seat Adjuster | 1 | ---- --- | ---- --- | ---- --- | 2092 226 | ---- --- |
| | w/Electric Seat Adjuster | 1 | ---- --- | ---- --- | ---- --- | 2092 187 | ---- --- |
| 23-45-20 | SPRING, Swivel Seat Cushion Frame to Lower Frame Tension | 2 | *1918 551 | *1918 551 | *1918 551 | *1918 551 | *1918 551 |
| | SPRING, Swivel Seat Cushion Frame Lower Seat Opening Assist | 2 | 2094 069 | 2094 069 | 2094 069 | 2094 069 | 2094 069 |
| | SUPPORT, Swivel Seat Center Cushion Frame Tension Wire w/Manual Seat Adjuster | 1 | 1969 032 | 1969 032 | 1969 032 | 1969 032 | 1969 032 |

★ Indicates use as required.
⊟ Indicates parts not listed in any previous parts book.
* Indicates change or addition.



MyMopar.com

Printed in U.S.A.
Prices and specifications subject to change without notice.
Dec. 9, 1960 Supersedes April 20, 1960.

## 23-45-0 FRONT SEAT - Cont'd

| CODE | REMARKS | PER CAR | PLYMOUTH | DODGE | DESOTO | CHRYSLER | IMPERIAL |
|---|---|---|---|---|---|---|---|
| 23-45-21 | BRACKET, Swivel Seat Center Cushion Frame Tension Wire | 2 | ---- --- | *1969 200 | *1969 200 | *1969 200 | ---- --- |
| 23-45-22 | STABLIZIER, Swivel Seat Cushion Frame Right | 1 | 2094 200 | 2094 200 | 2094 200 | 2094 200 | 2094 200 |
| | Left | 1 | 2094 201 | 2094 201 | 2094 201 | 2094 201 | 2094 201 |
| 23-45-24 | SUPPORT, Front Seat Cushion Release Wire C3-300 | 1 | ---- --- | ---- --- | ---- --- | 2092 241 | ---- --- |
| 23-45-25 | RAMP, Swivel Seat Cushion Frame Stabilizer | 2 | 2094 149 | 2094 149 | 2094 149 | 2094 149 | 2094 149 |
| 23-45-30 | BUMPER, Front Seat Back Stop Sp. Cl. Cp., Cv. Cp., Cl. Sed., 2 D. Sub., except Swivel Seats | 2 | 1815 328 | 1815 328 | 1815 328 | 1815 328 | 1815 328 |
| 23-45-33 | BRACKET, Front Seat Back Outer Hinge Arm Cover Sp. Cl. Cp., Cv. Cp., Cl. Sed., 2 D. Sub. D3, D4, S1 Right | 1 | ⊟2080 944 | ⊟2080 944 | ⊟2080 944 | ---- --- | ---- --- |
| | Left | 1 | ⊟2080 945 | ⊟2080 945 | ⊟2080 945 | ---- --- | ---- --- |
| 23-45-35 | BRACKET, Swivel Seat Door Hinge Lower Torsion Spring Right | 1 | 2094 438 | 2094 438 | 2094 438 | 2094 438 | 2094 438 |
| | Left | 1 | 2094 439 | 2094 439 | 2094 439 | 2094 439 | 2094 439 |
| 23-45-43 | BRACKET and RETAINER, Swivel Seat Cushion Frame Pivot C3-300 | 2 | ---- --- | ---- --- | ---- --- | ⊟2094 896 | ---- --- |
| 23-45-52 | HANDLE, Swivel Seat Latch Tapered Type | 2 | 2080 187 | 2080 187 | 2080 187 | 2080 187 | 2080 187 |
| 23-45-53 | SCREW, Swivel Seat Latch Handle to Shaft Attaching | 2 | *1902 031 | *1902 031 | *1902 031 | *1902 031 | *1902 031 |
| 23-45-54 | WASHER, Swivel Seat Latch Handle to Cushion | 2 | *2080 317 | ---- --- | ---- --- | ---- --- | ---- --- |
| 23-45-56 | SCREW, Swivel Seat Back Tension Adjusting | ★ | 6016 005 | 6016 005 | 6016 005 | 6016 005 | 6016 005 |
| 23-45-58 | SCREW, Swivel Seat Back Pivot Bracket Cover Attaching | 4 | 1901 691 | 1901 691 | 1901 691 | 1901 691 | 1901 691 |
| 23-45-59 | SPRING, Swivel Seat Cushion Frame Lower Return | 2 | 2094 067 | 2094 067 | 2094 067 | 2094 067 | 2094 067 |
| 23-45-61 | BUSHING, Swivel Seat Cushion Frame Lower Pivot | 2 | 2094 098 | 2094 098 | 2094 098 | 2094 098 | 2094 098 |
| 23-45-62 | NUT, Swivel Seat Cushion Frame Pivot Bracket, C3-300 | 2 | ---- --- | ---- --- | ---- --- | 2094 888 | ---- --- |
| 23-45-75 | FASTENER, Swivel Seat Adjuster Cover to Seat Bottom Frame | 2 | 2161 331 | 2161 331 | 2161 331 | 2161 331 | 2161 331 |
| 23-45-77 | PULLEY and BEARING, Swivel Seat Cushion Lower Frame | 2 | 2094 197 | 2094 197 | 2094 197 | 2094 197 | 2094 197 |
| 23-45-79 | CABLE, Swivel Seat Actuating Cable Door, Half | 2 | 2094 103 | 2094 103 | 2094 103 | 2094 103 | 2094 103 |
| | Seat, Half | 2 | 2094 278 | 2094 278 | 2094 278 | 2094 278 | 2094 278 |
| 23-45-80 | SEAL, Swivel Seat Actuating Cable Retaining Bracket to Pillar | 2 | 2094 063 | 2094 063 | 2094 063 | 2094 063 | 2094 063 |
| 23-45-87 | BRACKET, Swivel Seat Lower Door Hinge Actuating Cable Pin | 2 | 2094 055 | 2094 055 | 2094 055 | 2094 055 | 2094 055 |
| 23-45-89 | BOLT, Swivel Seat Lower Door Hinge Actuating Cable Bracket | 2 | 2094 060 | 2094 060 | 2094 060 | 2094 060 | 2094 060 |
| 23-45-91 | BRACKET, Swivel Seat Actuating Cable Housing Mounting on Front Pillar Right | 1 | 2094 150 | 2094 150 | 2094 150 | 2094 150 | 2094 329 |
| | Left | 1 | 2094 151 | 2094 151 | 2094 151 | 2094 151 | 2094 329 |
| 23-45-95 | BRACKET, Front Pillar Upper Hinge Reinforcement Assist Spring Retaining w/Swivel Seats Right | 1 | 2094 300 | 2094 300 | 2094 300 | 2094 300 | 2094 306 |
| | Left | 1 | 2094 301 | 2094 301 | 2094 301 | 2094 301 | 2094 307 |
| 23-45-96 | SPRING, Front Pillar Hinge Assist w/Swivel Seats | 2 | 2094 303 | 2094 303 | 2094 303 | 2094 303 | 2094 303 |
| 23-45-99 | ARM, Swivel Seat Cushion Frame Lower Pivot Actuating Right | 1 | 2094 094 | 2094 094 | 2094 094 | 2094 094 | ---- --- |
| | Left | 1 | 2094 095 | 2094 095 | 2094 095 | 2094 095 | ---- --- |
| 23-45-100 | LEVER, Swivel Seat Lower Frame Actuating Catch Right | 1 | 2094 400 | 2094 400 | 2094 400 | 2094 400 | 2094 400 |
| | Left | 1 | 2094 401 | 2094 401 | 2094 401 | 2094 401 | 2094 401 |

★ Indicates use as required.
⊟ Indicates parts not listed in any previous parts book.
Dec. 9, 1960 Supersedes April 20, 1960.



Printed in U.S.A.
Prices and specifications subject to change without notice.
* Indicates change or addition.
MyMopar.com

| CODE | REMARKS | PER CAR | PLYMOUTH | DODGE | DESOTO | CHRYSLER | IMPERIAL |
|---|---|---|---|---|---|---|---|
| **23-45-0** | **FRONT SEAT - Cont'd** | | | | | | |
| 23-45-101 | ROD, Swivel Seat Lower Frame Actuating Catch | 2 | 2094 404 | 2094 404 | 2094 404 | 2094 404 | 2094 404 |
| | C3-300 | 2 | ---- --- | ---- --- | ---- --- | 2094 655 | ---- --- |
| 23-45-102 | CATCH and BRACKET, Swivel Seat Lower Frame Actuating Right | 1 | 2094 396 | 2094 396 | 2094 396 | 2094 396 | 2094 396 |
| | Left | 1 | 2094 397 | 2094 397 | 2094 397 | 2094 397 | 2094 397 |
| | C3-300 Right | 1 | ---- --- | ---- --- | ---- --- | 2188 518 | ---- --- |
| | Left | 1 | ---- --- | ---- --- | ---- --- | 2188 519 | ---- --- |
| 23-45-103 | BOLT, Swivel Seat Lower Frame Actuating Rod to Catch | 2 | 2094 434 | 2094 434 | 2094 434 | 2094 434 | 2094 434 |
| 23-45-104 | SPRING, Swivel Seat Lower Frame Catch Actuating Lever | 2 | 2094 446 | 2094 446 | 2094 446 | 2094 446 | 2094 446 |
| 23-45-105 | SPRING, Swivel Seat Lower Frame Catch Actuating Pawl Right | 1 | 2094 414 | 2094 414 | 2094 414 | 2094 414 | 2094 414 |
| | Left | 1 | 2094 415 | 2094 415 | 2094 415 | 2094 415 | 2094 415 |
| 23-45-106 | SPRING, Swivel Seat Lower Frame Support to Catch | 2 | 2094 413 | 2094 413 | 2094 413 | 2094 413 | 2094 413 |
| 23-45-110 | NUT, Swivel Seat Lower Frame Actuating Catch Lever | 2 | 2094 445 | 2094 445 | 2094 445 | 2094 445 | 2094 445 |
| 23-45-111 | RIVET, Swivel Seat Lower Frame Actuating Catch Support | 2 | 2094 444 | 2094 444 | 2094 444 | 2094 444 | 2094 444 |
| 23-45-112 | HOOK, Swivel Seat Frame to Lower Pivot Arm Retainer | 2 | 2188 558 | 2188 558 | 2188 558 | 2188 558 | 2188 558 |
| | C3-300 | 2 | ---- --- | ---- --- | ---- --- | 2188 411 | ---- --- |
| 23-45-113 | U/NUT, Swivel Seat Lower Frame Actuating Rod Catch | 2 | 2094 460 | 2094 460 | 2094 460 | 2094 460 | 2094 460 |
| 23-45-115 | SCREW, Swivel Seat Actuating Catch Support to Lower Frame | 2 | 9415 101 | 9415 101 | 9415 101 | 9415 101 | 9415 101 |
| **23-47-0** | **FRONT SEAT ADJUSTER** | | | | | | |
| 23-47-6 | GUIDE or TRACK, Manual 6 Way Seat Adjuster Upper Right | 1 | 2080 956 | 2080 956 | 2080 956 | 2080 956 | 2080 956 |
| | Left | 1 | 2080 957 | 2080 957 | 2080 957 | 2080 957 | 2080 957 |
| | Lower Right | 1 | 2080 952 | 2080 952 | 2080 952 | 2080 952 | 2080 952 |
| | Left | 1 | 2080 953 | 2080 953 | 2080 953 | 2080 953 | 2080 953 |
| | ADJUSTER, Manual Seat, Y1-L Right | 1 | ---- --- | 2080 904 | 2080 904 | 2080 904 | 2080 904 |
| | Left | 1 | ---- --- | 2080 905 | 2080 905 | 2080 905 | 2080 905 |
| | GUIDE or TRACK, Electric Seat Adjuster Right | 1 | 2080 828 | 2080 828 | 2080 828 | 2080 828 | 2080 828 |
| | Left | 1 | 2080 827 | 2080 827 | 2080 827 | 2080 827 | 2080 827 |
| | w/Swivel Seats, Right | 1 | ---- --- | ---- --- | ---- --- | ---- --- | 2080 828 |
| | Left | 1 | ---- --- | ---- --- | ---- --- | ---- --- | 2080 827 |
| 23-47-8 | COVER, Swivel Seat Adjuster Track Right | 1 | 1916 840 | 1916 840 | 1916 840 | 1916 840 | 1916 840 |
| | Left | 1 | 1916 852 | 1916 852 | 1916 852 | 1916 852 | 1916 852 |
| | COVER, Electric Seat Adjuster Track, except w/Swivel Seats Right | 1 | 1839 386 | 1839 386 | 1839 386 | 1839 386 | 1839 386 |
| | Left | 1 | 1839 387 | 1839 387 | 1839 387 | 1839 387 | 1839 387 |
| | COVER, Electric Seat Adjuster Track Floor Pan Well Right | 1 | ---- --- | ---- --- | ---- --- | ---- --- | 1902 108 |
| | Left | 1 | ---- --- | ---- --- | ---- --- | ---- --- | 1902 109 |
| | NOTE: With 1916 852 Cover also specify 1 of 1902 186 Name Plate. | | | | | | |
| 23-47-9 | STUD, Electric Seat Adjuster to Floor | 8 | 6008 111 | 6008 111 | 6008 111 | 6008 111 | 6008 111 |
| | BOLT and WASHER, Manual Seat Guide Support | 4 | 6008 220 | 6008 220 | 6008 220 | 6008 220 | 6008 220 |
| 23-47-12 | STOP, Electric Seat Adjuster Track Horizontal Right | 1 | 1830 236 | 1830 236 | 1830 236 | 1830 236 | 1830 236 |
| | Left | 1 | 1830 237 | 1830 237 | 1830 237 | 1830 237 | 1830 237 |
| 23-47-14 | SCREW, Swivel Seat Adjuster Track Cover Attaching, All | 8 | 1901 691 | 1901 691 | 1901 691 | 1901 691 | 1901 691 |
| 23-47-16 | NUT, Front Seat Guide Support Front | 2 | 2080 951 | 2080 951 | 2080 951 | 2080 951 | 2080 951 |
| | Rear | 2 | 120 377 | 120 377 | 120 377 | 120 377 | 120 377 |
| 23-47-26 | SPRING, Manual Seat Guide Tension | 2 | 1902 350 | 1902 350 | 1902 350 | 1902 350 | 1902 350 |
| 23-47-35 | NUT and WASHER, Seat Guide to Floor Pan | 8 | 6000 243 | 6000 243 | 6000 243 | 6000 243 | 6000 243 |


MyMopar.com

## 23-47-0 FRONT SEAT ADJUSTER - Cont'd

| CODE | REMARKS | PER CAR | PLYMOUTH | DODGE | DESOTO | CHRYSLER | IMPERIAL |
|---|---|---|---|---|---|---|---|
| 23-47-55 | KNOB, Manual Seat Guide Latch | 1 | 1902 217 | ⊟2161 291 | ⊟2161 291 | ⊟2161 291 | ⊟2161 291 |
| 23-47-64 | CLIP, Front Seat Guide Connecting Wire, All | 1 | 1969 366 | 1969 366 | 1969 366 | 1969 366 | 1969 366 |
| 23-47-66 | WIRE, Manual Seat Guide Latch Connector | | | | | | |
| | w/o Swivel Seats | 1 | 1969 367 | 1969 367 | 1969 367 | 1969 367 | 1969 367 |
| | w/Swivel Seats | 1 | 2092 184 | 2092 184 | 2092 184 | 2092 184 | ---- --- |
| 23-47-75 | SPRING, Manual Seat Guide Latch | 2 | *1645 615 | *1645 615 | *1645 615 | *1645 615 | *1645 615 |
| 23-47-196 | PIN, Electric Seat Adjuster Track Rear Lever and Guard to Base | 2 | *6008 216 | *6008 216 | *6008 216 | *6008 216 | *6008 216 |
| 23-47-344 | UNIT or MECHANISM, Electric Seat Adjuster Drive | 1 | *1819 228 | *1819 228 | *1819 228 | *1819 228 | *1819 228 |
| 23-47-350 | DOWEL PIN, Electric Seat Adjuster Drive Unit | 2 | ---- --- | *6008 051 | *6008 051 | *6008 051 | *6008 051 |
| 23-47-352 | SCREW, Electric Seat Adjuster Drive Unit | 6 | *6008 126 | *6008 126 | *6008 126 | *6008 126 | *6008 126 |
| | SCREW, Electric Seat Adjuster Slave Unit Cap or Cover | 16 | *6008 027 | *6008 027 | *6008 027 | *6008 027 | *6008 027 |
| 23-47-375 | STUD, Electric Seat Adjuster Stabilizer to Floor Bracket | 1 | *2080 456 | *2080 456 | *2080 456 | *2080 456 | *2080 456 |
| 23-47-383 | PIVOT END, Electric Seat Adjuster Stabilizer Strut | 2 | *2080 329 | *2080 329 | *2080 329 | *2080 329 | *2080 329 |
| 23-47-384 | STRUT, Electric Seat Adjuster Stabilizer | | | | | | |
| | Female | 1 | 2080 330 | 2080 330 | 2080 330 | 2080 330 | 2080 330 |
| | Male | 1 | 2080 331 | 2080 331 | 2080 331 | 2080 331 | 2080 331 |
| 23-47-385 | STUD, Electric Seat Adjuster Stabilizer Pivot End to Floor Bracket, All | 1 | 2080 456 | 2080 456 | 2080 456 | 2080 456 | 2080 456 |
| 23-47-386 | WASHER, Electric Seat Adjuster Stabilizer Pivot End | 2 | *2080 466 | *2080 466 | *2080 466 | *2080 466 | *2080 466 |
| 23-47-387 | GUARD, Electric Seat Adjuster Track Rear Lever | 2 | *2080 478 | *2080 478 | *2080 478 | *2080 478 | *2080 478 |
| 23-47-413 | SPRING, Electric Seat Adjuster Drive Unit Gear Selector Lever and Shaft | 3 | *1819 230 | *1819 230 | *1819 230 | *1819 230 | *1819 230 |
| 23-47-414 | COIL PACKAGE, Electric Seat Adjuster Drive Unit Solenoid | 3 | *1830 290 | *1830 290 | *1830 290 | *1830 290 | *1830 290 |
| 23-47-423 | CIRCUIT BREAKER, Electric Seat Adjuster | | | | | | |
| | 30 amp. | 1 | 1689 022 | ---- --- | ---- --- | ---- --- | ---- --- |
| | 40 amp. | 1 | ---- --- | 1769 967 | 1769 967 | 1769 967 | 1769 967 |
| 23-47-424 | CLIP, Electric Seat Adjuster Circuit Breaker Mounting | 1 | 6015 159 | 6015 159 | 6015 159 | 6015 159 | ---- --- |
| 23-47-425 | RELAY, Electric Seat Adjuster | 1 | 1779 890 | 1779 890 | 1779 890 | 1779 890 | 1779 890 |
| 23-47-427 | SCREW and WASHER, Electric Seat Adjuster Relay Mounting | 2 | 6008 110 | 6008 110 | 6008 110 | 6008 110 | 6008 110 |
| 23-47-430 | MOTOR, Electric Seat Adjuster | 1 | 1779 055 | 1779 055 | 1779 055 | 1779 055 | 1779 055 |
| 23-47-431 | TUBE, Electric Seat Adjuster Drive Unit to | | | | | | |
| | Slave Unit Cable, Front Control, Left, Short | 1 | 1830 216 | 1830 216 | 1830 216 | 1830 216 | 1830 216 |
| | Rear Control, Left, Short | 1 | 1830 217 | 1830 217 | 1830 217 | 1830 217 | 1830 217 |
| | Horizontal Control, Left, Short | 1 | 1830 218 | 1830 218 | 1830 218 | 1830 218 | 1830 218 |
| | w/BRACKETS, Right, Long | 1 | 1830 212 | 1830 212 | 1830 212 | 1830 212 | 1830 212 |
| 23-47-432 | COUPLING, Electric Seat Adjuster Motor to Mechanism or Drive Unit | 1 | 1594 834 | 1594 834 | 1594 834 | 1594 834 | 1594 834 |
| | CABLE, Electric Seat Adjuster Drive Unit to | | | | | | |
| | Slave Unit Front Control, Right, 50 5/16" | 1 | 1830 344 | 1830 344 | 1830 344 | 1830 344 | 1830 344 |
| | Left, 10 25/32" | 1 | 1830 345 | 1830 345 | 1830 345 | 1830 345 | 1830 345 |
| | Rear Control, Right, 48" | 1 | 1830 346 | 1830 346 | 1830 346 | 1830 346 | 1830 346 |
| | Left, 10" | 1 | 1830 347 | 1830 347 | 1830 347 | 1830 347 | 1830 347 |
| | Horizontal Control, Right, 50 13/16" | 1 | 1830 348 | 1830 348 | 1830 348 | 1830 348 | 1830 348 |
| | Left, 12 5/32" | 1 | 1830 349 | 1830 349 | 1830 349 | 1830 349 | 1830 349 |
| 23-47-434 | THRU BOLT, Electric Seat Adjuster Motor | | | | | | |
| | w/AutoLite Motor | 1 | ---- --- | 1818 904 | 1818 904 | 1818 904 | 1818 904 |
| 23-47-446 | SWITCH, Electric Seat Adjuster | | | | | | |
| | w/Swivel Seats | 1 | 2096 658 | 2096 658 | 2096 658 | 2096 658 | 2096 658 |
| | w/o Swivel Seats | 1 | 1972 598 | 1972 598 | 1972 598 | 1972 598 | 1972 598 |
| 23-47-451 | BEZEL, Electric Seat Adjusting Switch | | | | | | |
| | w/Swivel Seats | 1 | 2080 946 | 2080 946 | 2080 946 | 2080 946 | 2080 946 |
| S1 | w/o Swivel Seats | 1 | 2161 261 | ---- --- | 2161 261 | ---- --- | ---- --- |
| 23-47-454 | BRUSH and SPRING PACKAGE, Electric Seat Adjuster Motor w/AutoLite Motor | 1 | ---- --- | 1495 533 | 1495 533 | 1495 533 | 1495 533 |
| | w/Redmond Motor | 1 | ---- --- | 1297 879 | 1297 879 | 1297 879 | 1297 879 |



MyMopar.com

| CODE | REMARKS | PER CAR | PLYMOUTH | DODGE | DESOTO | CHRYSLER | IMPERIAL |
|---|---|---|---|---|---|---|---|
| **23-47-0 FRONT SEAT ADJUSTER - Cont'd** | | | | | | | |
| 23-47-457 | KNOB, Electric Seat Adjuster Switch | 1 | 2096 022 | 2096 022 | 2096 022 | 2096 022 | 2096 022 |
| 23-47-458 | STUD, Electric Seat Adjuster Switch Bezel S1 | 2 | 6010 020 | ---- --- | 6010 020 | ---- --- | ---- --- |
| **23-48-0 SECOND AND THIRD SEAT** | | | | | | | |
| 23-48-6 | SPACER, Seat Back to Cushion, Down Position | | | | | | |
| | Sub. | ★ | 1884 737 | 1884 737 | ---- --- | 1884 737 | ---- --- |
| 23-48-11 | PIN, Third Seat Back Hinge | | | | | | |
| | Sub. | 2 | 1960 627 | 1960 627 | ---- --- | 1960 627 | ---- --- |
| 23-48-19 | STRIKER, Seat Back Up Position | | | | | | |
| | Sub. Second Seat, Right | 1 | 1961 438 | 1961 438 | ---- --- | 1961 438 | ---- --- |
| | Left | 1 | 1961 439 | 1961 439 | ---- --- | 1961 439 | ---- --- |
| | Third Seat | 2 | 1960 503 | 1960 503 | ---- --- | 1960 503 | ---- --- |
| | LATCH, Third Seat Back Up Position, on Wheelhouse | | | | | | |
| | Sub. | 2 | 1775 440 | 1775 440 | ---- --- | 1775 440 | ---- --- |
| 23-48-20 | HANDLE, Third Seat Lift | | | | | | |
| | Sub. Chrome | 2 | 1833 596 | 1833 596 | ---- --- | 1833 596 | ---- --- |
| 23-48-21 | ESCUTCHEON, Third Seat Lift Handle | | | | | | |
| | Sub. In Prime | 2 | 1775 814 | 1775 814 | ---- --- | 1775 814 | ---- --- |
| | Chrome | 2 | 1833 597 | 1833 597 | ---- --- | 1833 597 | ---- --- |
| 23-48-28 | BRACKET, Seat Back Up Position, on Wheelhouse | | | | | | |
| | Sub. Second Seat, Right | 1 | 1961 230 | 1961 230 | ---- --- | 1961 230 | ---- --- |
| | Left | 1 | 1961 231 | 1961 231 | ---- --- | 1961 231 | ---- --- |
| | Third Seat | 2 | 1878 641 | 1878 641 | ---- --- | 1878 641 | ---- --- |
| 23-48-49 | ROD, Second Seat Back Latch Actuating | | | | | | |
| | Sub. | 1 | 1961 091 | 1961 091 | ---- --- | 1961 091 | ---- --- |
| 23-48-50 | PIN, Second Seat Back Latch Handle Stop | | | | | | |
| | Sub. | 2 | 1961 085 | 1961 085 | ---- --- | 1961 085 | ---- --- |
| 23-48-51 | HANDLE, Second Seat Back Latch | | | | | | |
| | Sub. Right | 1 | 1961 436 | 1961 436 | ---- --- | 1961 436 | ---- --- |
| | Left | 1 | 1961 437 | 1961 437 | ---- --- | 1961 437 | ---- --- |
| 23-48-52 | SPRING, Second Seat Back Latch Handle Retaining | | | | | | |
| | Sub. Right | 1 | 1961 692 | 1961 692 | ---- --- | 1961 692 | ---- --- |
| | Left | 1 | 1961 693 | 1961 693 | ---- --- | 1961 693 | ---- --- |
| 23-48-65 | PANEL and HINGES, Second Seat Back | | | | | | |
| | Sub. | 1 | 1878 652 | 1878 652 | ---- --- | 1878 652 | ---- --- |
| 23-48-78 | SPRING, Second Seat Cushion Leg | | | | | | |
| | Sub. Right | 1 | 2093 646 | 2093 646 | ---- --- | 2093 646 | ---- --- |
| | Left | 1 | 2093 647 | 2093 647 | ---- --- | 2093 647 | ---- --- |
| 23-48-87 | SUPPORT and PIN, Second Seat Cushion Hinge | | | | | | |
| | Sub. Right | 1 | 1877 926 | 1877 926 | ---- --- | 1877 926 | ---- --- |
| | Left | 1 | 1877 927 | 1877 927 | ---- --- | 1877 927 | ---- --- |
| 23-48-93 | BUMPER, Seat Cushion Bottom | | | | | | |
| | Sub. | ★ | 1380 060 | 1380 060 | ---- --- | 1380 060 | ---- --- |
| | BUMPER, Second Seat Back Up Position, on Wheelhouse | | | | | | |
| | Sub. | 2 | 1380 060 | 1380 060 | ---- --- | 1380 060 | ---- --- |
| | BUMPER, Third Seat Back Up Position, on Wheelhouse Bracket | | | | | | |
| | Sub. | 2 | 1835 109 | 1835 109 | ---- --- | 1835 109 | ---- --- |
| 23-48-94 | RETAINER, Third Seat Back Up Position Latch and Bumper Mounting Screw | | | | | | |
| | Sub. | 2 | 6000 177 | 6000 177 | ---- --- | 6000 177 | ---- --- |
| 23-48-98 | HINGE and BEARING, Second Seat Bottom | | | | | | |
| | Sub. Right | 1 | *1878 910 | *1878 910 | ---- --- | *1878 910 | ---- --- |
| | Left | 1 | *1878 911 | *1878 911 | ---- --- | *1878 911 | ---- --- |
| 23-48-101 | LEG, Second Seat Cushion | | | | | | |
| | Sub. Right | 1 | 2093 236 | 2093 236 | ---- --- | 2093 236 | ---- --- |
| | Left | 1 | 2093 237 | 2093 237 | ---- --- | 2093 237 | ---- --- |


MyMopar.com

| CODE | REMARKS | | PER CAR | PLYMOUTH | DODGE | DESOTO | CHRYSLER | IMPERIAL |
|---|---|---|---|---|---|---|---|---|
| **23-48-0 SECOND AND THIRD SEAT - Cont'd** | | | | | | | | |
| 23-48-105 | SPACER, Second Seat Bottom Hinge Support to Floor Pan | | | | | | | |
| | Sub. | Front | 2 | ⊟2188 616 | ⊟2188 616 | ---- --- | ⊟2188 616 | ---- --- |
| | | Rear | 2 | ⊟2188 617 | ⊟2188 617 | ---- --- | ⊟2188 617 | ---- --- |
| 23-48-108 | SPRING, Second Seat Bottom Leg | | | | | | | |
| | Sub. | Right | 1 | 2093 646 | 2093 646 | ---- --- | 2093 646 | ---- --- |
| | | Left | 1 | 2093 647 | 2093 647 | ---- --- | 2093 647 | ---- --- |
| 23-48-112 | PANEL and HINGES, Second Seat Cushion Bottom | | | | | | | |
| | Sub. | | 1 | 1878 769 | 1878 769 | ---- --- | 1878 769 | ---- --- |
| 23-48-116 | WASHER, Second Seat Bottom Leg to Pivot Bolt | | | | | | | |
| | Sub. | | 2 | ⊟6022 153 | ⊟6022 153 | ---- --- | ⊟6022 153 | ---- --- |
| 23-48-121 | HINGE, Third Seat | | | | | | | |
| | Sub. | Body, Right | 1 | 1878 170 | 1878 170 | ---- --- | 1878 170 | ---- --- |
| | | Left | 1 | 1878 171 | 1878 171 | ---- --- | 1878 171 | ---- --- |
| | | Cushion, Right | 1 | 2094 130 | 2094 130 | ---- --- | 2094 130 | ---- --- |
| | | Left | 1 | 2094 131 | 2094 131 | ---- --- | 2094 131 | ---- --- |
| | HINGE, Third Seat Bottom | | | | | | | |
| | Sub. | Body Half, Right | 1 | *2094 130 | *2094 130 | ---- --- | *2094 130 | ---- --- |
| | | Left | 1 | *2094 131 | *2094 131 | ---- --- | *2094 131 | ---- --- |
| 23-48-148 | PIN, Second Seat Back Pivot | | | | | | | |
| | Sub. | Includes BRACKET, Right | 1 | 1878 600 | 1878 600 | ---- --- | 1878 600 | ---- --- |
| | | Left | 1 | 1878 601 | 1878 601 | ---- --- | 1878 601 | ---- --- |
| 23-48-149 | WASHER, Second Seat Cushion Hinge Pin | | | | | | | |
| | Sub. | | 2 | 6000 097 | 6000 097 | ---- --- | 6000 097 | ---- --- |
| 23-48-166 | SCREW and WASHER, Second Seat Cushion Hinge Support to Floor Pan | | | | | | | |
| | Sub. | | 6 | 1244 818 | 1244 818 | ---- --- | 1244 818 | ---- --- |
| 23-48-180 | PANEL and HINGES, Third Seat Cushion Bottom | | | | | | | |
| | Sub. | | 1 | 1878 755 | 1878 755 | ---- --- | 1878 755 | ---- --- |
| 23-48-188 | PANEL and HINGES, Third Seat Back | | | | | | | |
| | Sub. | | 1 | 1878 592 | 1878 592 | ---- --- | 1878 592 | ---- --- |
| **23-51-0 SIDE SILL AND BELT BAR** | | | | | | | | |
| 23-51-3 | SILL, Body Side | | | | | | | |
| | 4 D., Sp. 4 D. | Outer, Right | 1 | ---- --- | ---- --- | ---- --- | ---- --- | 2084 532 |
| | | Left | 1 | ---- --- | ---- --- | ---- --- | ---- --- | 2084 533 |
| | | Inner, Right | 1 | ---- --- | ---- --- | ---- --- | ---- --- | 1861 352 |
| | | Left | 1 | ---- --- | ---- --- | ---- --- | ---- --- | 1861 353 |
| | Sp. Cl. Cp., Cv. Cp. | Outer, Right | 1 | ---- --- | ---- --- | ---- --- | ---- --- | 2084 530 |
| | | Left | 1 | ---- --- | ---- --- | ---- --- | ---- --- | 2084 531 |
| | | Inner, Right | 1 | ---- --- | ---- --- | ---- --- | ---- --- | 1877 994 |
| | | Left | 1 | ---- --- | ---- --- | ---- --- | ---- --- | 1877 995 |
| 23-51-5 | PANEL, Body Side Sill Outer | | | | | | | |
| | 4 D., D3, D4, C1, C2 | Right | 1 | *1952 874 | *1952 874 | *1952 962 | *1952 962 | ---- --- |
| | | Left | 1 | 1952 875 | 1952 875 | 1952 963 | 1952 963 | ---- --- |
| | 4 D., D1, D2, C3 | Right | 1 | ---- --- | *1952 962 | ---- --- | *1952 916 | ---- --- |
| | | Left | 1 | ---- --- | 1952 963 | ---- --- | 1952 917 | ---- --- |
| | Sp. 4 D., Sp. 4 D. Sub., except Phoenix and Windsor | Right | 1 | 1952 882 | 1952 912 | 1952 912 | 1952 918 | ---- --- |
| | | Left | 1 | 1952 883 | 1952 913 | 1952 913 | 1952 919 | ---- --- |
| | Sp. 4 D., Sp. 4 D. Sub., D3H, D4H, C1 | Right | 1 | ---- --- | 1952 882 | ---- --- | 1952 912 | ---- --- |
| | | Left | 1 | ---- --- | 1952 883 | ---- --- | 1952 913 | ---- --- |
| | Sp. Cl. Cp., D3, D4, C1 | Right | 1 | 1952 884 | 1952 884 | 1952 960 | 1952 960 | ---- --- |
| | | Left | 1 | 1952 885 | 1952 885 | 1952 961 | 1952 961 | ---- --- |
| | Sp. Cl. Cp., D1, D2, C2, C3 | Right | 1 | ---- --- | 1952 960 | ---- --- | 1952 920 | ---- --- |
| | | Left | 1 | ---- --- | 1952 961 | ---- --- | 1952 921 | ---- --- |
| | Cv. Cp., D2, C3 | Right | 1 | 1952 922 | 1952 924 | ---- --- | 1952 926 | ---- --- |
| | | Left | 1 | 1952 923 | 1952 925 | ---- --- | 1952 927 | ---- --- |
| | Cv. Cp., D4, C1 | Right | 1 | ---- --- | 1952 922 | ---- --- | 1952 924 | ---- --- |
| | | Left | 1 | ---- --- | 1952 923 | ---- --- | 1952 925 | ---- --- |
| | 4 D. Sub. | Right | 1 | 1952 962 | 1952 962 | ---- --- | ---- --- | ---- --- |
| | | Left | 1 | 1952 963 | 1952 963 | ---- --- | ---- --- | ---- --- |

★ Indicates use as required.
⊟ Indicates parts not listed in any previous parts book.
Dec. 9, 1960 Supersedes April 20, 1960.



Printed in U.S.A.
Prices and specifications subject to change without notice.
* Indicates change or addition.
MyMopar.com

| CODE | REMARKS | | PER CAR | PLYMOUTH | DODGE | DESOTO | CHRYSLER | IMPERIAL |
|---|---|---|---|---|---|---|---|---|
| **23-51-0 SIDE SILL AND BELT BAR - Cont'd** | | | | | | | | |
| 23-51-5 | PANEL - Cont'd | | | | | | | |
| | 2 D. Sub. | Right | 1 | 1952 960 | ---- --- | ---- --- | ---- --- | ---- --- |
| | | Left | 1 | 1952 961 | ---- --- | ---- --- | ---- --- | ---- --- |
| | Cl. Sed. | Right | 1 | 1952 884 | 1952 884 | ---- --- | ---- --- | ---- --- |
| | | Left | 1 | 1952 885 | 1952 885 | ---- --- | ---- --- | ---- --- |
| | PANEL, Body Side Sill Inner | Front Right | 1 | 1961 066 | 1961 066 | 1961 066 | 1961 066 | ---- --- |
| | | Left | 1 | 1961 067 | 1961 067 | 1961 067 | 1961 067 | ---- --- |
| | | Rear Right | 1 | 1861 014 | 1861 014 | 1861 014 | 1861 014 | ---- --- |
| | | Left | 1 | 1861 015 | 1861 015 | 1861 015 | 1861 015 | ---- --- |
| 23-51-8 | COVER, Body Side Sill Front End | | | | | | | |
| | | Right | 1 | ---- --- | ---- --- | ---- --- | ---- --- | *1861 270 |
| | | Left | 1 | ---- --- | ---- --- | ---- --- | ---- --- | *1861 271 |
| 23-51-41 | BAR, Quarter Belt Side | | | | | | | |
| | Sp. Cl. Cp. | Right | 1 | ---- --- | ---- --- | 1878 428 | 1878 428 | 1877 462 |
| | | Left | 1 | ---- --- | ---- --- | 1878 429 | 1878 429 | 1877 463 |
| | Cv. Cp., D2 | Right | 1 | 1909 474 | 1909 508 | ---- --- | 1909 510 | ---- --- |
| | | Left | 1 | 1909 475 | 1909 509 | ---- --- | 1909 511 | ---- --- |
| | Cv. Cp., D4 | Right | 1 | ---- --- | 1963 996 | ---- --- | ---- --- | ---- --- |
| | | Left | 1 | ---- --- | 1963 997 | ---- --- | ---- --- | ---- --- |
| | BAR, Side Belt | | | | | | | |
| | Sp. Cl. Cp. | Right | 1 | ---- --- | ---- --- | 1878 428 | 1878 428 | ---- --- |
| | | Left | 1 | ---- --- | ---- --- | 1878 429 | 1878 429 | ---- --- |
| | Sub. | Right | 1 | 1878 238 | 1878 238 | ---- --- | 1878 238 | ---- --- |
| | | Left | 1 | 1878 239 | 1878 239 | ---- --- | 1878 239 | ---- --- |
| | 4 D., Sp. 4 D. | Right | 1 | ---- --- | ---- --- | ---- --- | ---- --- | 1877 522 |
| | | Left | 1 | ---- --- | ---- --- | ---- --- | ---- --- | 1877 523 |
| | Cv. Cp. | Right | 1 | ---- --- | ---- --- | ---- --- | ---- --- | 1877 494 |
| | | Left | 1 | ---- --- | ---- --- | ---- --- | ---- --- | 1877 495 |
| | BAR, Rear Belt | | | | | | | |
| | Cv. Cp. | | 1 | 1950 584 | 1950 584 | ---- --- | 1952 273 | ---- --- |
| | BAR, Center Belt | | | | | | | |
| | Sp. Cl. Cp., S1 | | 1 | ---- --- | ---- --- | 1877 975 | 1877 975 | ---- --- |
| 23-51-45 | PLUG, Side Belt Bar Sealing | | | | | | | |
| | Sub. | | 4 | 2093 981 | 2093 981 | ---- --- | 2093 981 | ---- --- |
| **23-52-0 SEAT SPRING** | | | | | | | | |
| 23-52-1 | SPRING PACKAGE, Seat Cushion Helper | | | | | | | |
| | | w/o Heavy Duty Springs | 1 | *1872 552 | *1872 552 | *1872 552 | *1872 552 | *1872 552 |
| | | w/Heavy Duty Springs | 1 | ⊟2160 999 | ⊟2160 999 | ---- --- | ---- --- | ---- --- |
| **23-54-0 TAIL GATE** | | | | | | | | |
| 23-54-1 | LOCK, Tailgate | | | | | | | |
| | Sub. | Right | 1 | 1961 786 | 1961 786 | ---- --- | 1961 786 | ---- --- |
| | | Left | 1 | 1961 787 | 1961 787 | ---- --- | 1961 787 | ---- --- |
| 23-54-3 | TAILGATE | | | | | | | |
| | | w/Electric Window Lift | 1 | 1909 473 | 1909 473 | ---- --- | 1909 473 | ---- --- |
| | | w/Manual Window Lift | 1 | 1909 472 | 1909 472 | ---- --- | ---- --- | ---- --- |
| 23-54-4 | HINGE, Tailgate | | | | | | | |
| | Sub. | w/Flat End PIN | 2 | *1960 182 | *1960 182 | ---- --- | *1960 182 | ---- --- |
| | | w/Tapered End PIN, Right | 1 | ⊟2188 934 | ⊟2188 934 | ---- --- | ⊟2188 934 | ---- --- |
| | | Left | 1 | ⊟2188 935 | ⊟2188 935 | ---- --- | ⊟2188 935 | ---- --- |
| 23-54-6 | PLATE, Tailgate Lock Striker | | | | | | | |
| | Sub. | Right | 1 | 1774 024 | 1774 024 | ---- --- | 1774 024 | ---- --- |
| | | Left | 1 | 1774 025 | 1774 025 | ---- --- | 1774 025 | ---- --- |
| 23-54-11 | ORNAMENT PACKAGE, Tailgate Lift | | | | | | | |
| | Sub. | w/Electric Window Lift | 1 | 2196 461 | 2196 461 | ---- --- | 2196 461 | ---- --- |
| | NUT and WASHER | | 3 | 151 497 | 151 497 | ---- --- | 151 497 | ---- --- |
| | ORNAMENT, Tailgate | | | | | | | |
| | Sub. | | 1 | 2196 148 | ---- --- | ---- --- | ---- --- | ---- --- |
| | CLIP | | 3 | 6000 020 | ---- --- | ---- --- | ---- --- | ---- --- |
| | MEDALLION, Tailgate "500" | | | | | | | |
| | Sub. | | 1 | ---- --- | 2196 459 | ---- --- | ---- --- | ---- --- |
| | CLIP | | 3 | ---- --- | 6000 020 | ---- --- | ---- --- | ---- --- |


MyMopar.com

## 23-54-0 TAIL GATE - Cont'd

| CODE | REMARKS | PER CAR | PLYMOUTH | DODGE | DESOTO | CHRYSLER | IMPERIAL |
|---|---|---|---|---|---|---|---|
| 23-54-11 | NAME PLATE, Tailgate | | | | | | |
| | Sub. "Plymouth" | 1 | 2196 147 | ---- --- | ---- --- | ---- --- | ---- --- |
| | CLIP | 3 | 6010 174 | ---- --- | ---- --- | ---- --- | ---- --- |
| | Sub. "Dodge" | 1 | ---- --- | 2196 446 | ---- --- | ---- --- | ---- --- |
| | CLIP | 4 | ---- --- | 6000 050 | ---- --- | ---- --- | ---- --- |
| | Sub. "Chrysler" | 1 | ---- --- | ---- --- | ---- --- | 2196 469 | ---- --- |
| | NUT and WASHER | 4 | ---- --- | ---- --- | ---- --- | 6000 490 | ---- --- |
| | LETTER, Tailgate Name | | | | | | |
| | Sub. "D" | 2 | ---- --- | 2196 258 | ---- --- | ---- --- | ---- --- |
| | "O" | 1 | ---- --- | 2196 259 | ---- --- | ---- --- | ---- --- |
| | "G" | 1 | ---- --- | 2196 260 | ---- --- | ---- --- | ---- --- |
| | "E" | 1 | ---- --- | 2196 261 | ---- --- | ---- --- | ---- --- |
| | CLIP | 5 | ---- --- | 6010 174 | ---- --- | ---- --- | ---- --- |
| | NUT and SEAL | 5 | ---- --- | 6000 490 | ---- --- | ---- --- | ---- --- |
| 23-54-12 | SCREW, Tailgate Outside Handle Base | | | | | | |
| | Sub. | 3 | 1960 020 | 1960 020 | ---- --- | ---- --- | ---- --- |
| 23-54-18 | BASE, Tailgate Ornament | | | | | | |
| | Sub. | 1 | 1960 792 | ---- --- | ---- --- | ---- --- | ---- --- |
| 23-54-20 | BUSHING, Tailgate Hinge Mounting | | | | | | |
| | Sub. 2 1/10" lgh. | 2 | *1960 186 | *1960 186 | ---- --- | *1960 186 | ---- --- |
| | 2 2/3" lgh. Right | 1 | ⊟2188 836 | ⊟2188 836 | ---- --- | ⊟2188 836 | ---- --- |
| | Left | 1 | ⊟2188 628 | ⊟2188 628 | ---- --- | ⊟2188 628 | ---- --- |
| 23-54-26 | CLIP, Tailgate Watershield Attaching | | | | | | |
| | Sub. | 2 | 2086 574 | 2086 574 | ---- --- | 2086 574 | ---- --- |
| 23-54-27 | SPACER, Tailgate Lock Striker | | | | | | |
| | Sub. | ★ | 1777 926 | 1777 926 | ---- --- | 1777 926 | ---- --- |
| 23-54-28 | GUARD, Tailgate Lower Dust | | | | | | |
| | Sub. | 1 | 2093 494 | 2093 494 | ---- --- | 2093 494 | ---- --- |
| 23-54-31 | SPRING, Tailgate Lock Lever | | | | | | |
| | Sub. | 2 | 1777 458 | 1777 458 | ---- --- | 1777 458 | ---- --- |
| 23-54-32 | SCREW, Tailgate Hinge Attaching | | | | | | |
| | Sub. | 6 | 6006 056 | 6006 056 | ---- --- | 6006 056 | ---- --- |
| 23-54-53 | SEAL, Tailgate Access Cover to Inner Panel | | | | | | |
| | Sub. Foam | 1 | ⊟2241 219 | ⊟2241 219 | ---- --- | ⊟2241 219 | ---- --- |
| 23-54-59 | BRACKET, Tailgate Window Down Position Stop Bumper | | | | | | |
| | Sub. | 2 | 1878 584 | 1878 584 | ---- --- | 1878 584 | ---- --- |
| 23-54-63 | PLATE, Tailgate Opening Lower Scuff | | | | | | |
| | Sub. | 1 | 2080 012 | 2080 012 | ---- --- | 2080 012 | ---- --- |
| | MOULDING, Tailgate Opening Lower Sill | | | | | | |
| | 2 D. Sub., 4 D. Sub., P1L, P2L, P1M, P2M D3, D4 Right | 1 | 2080 010 | 2080 010 | ---- --- | ---- --- | ---- --- |
| | Left | 1 | 2080 011 | 2080 011 | ---- --- | ---- --- | ---- --- |
| 23-54-69 | SCREW and WASHER, Tailgate Lock Striker Plate | | | | | | |
| | Sub. | ★ | ⊟6022 147 | ⊟6022 147 | ---- --- | ⊟6022 147 | |
| 23-54-72 | REGULATOR or PLATE and ARM, Tailgate Window | | | | | | |
| | Sub. Manual | 1 | 1878 450 | 1878 450 | ---- --- | ---- --- | ---- --- |
| | Electric | 1 | 1961 367 | 1961 367 | ---- --- | 1961 367 | ---- --- |
| 23-54-73 | HANDLE, Tailgate Manual Window Regulator | | | | | | |
| | Sub. | 1 | 1960 493 | 1960 493 | ---- --- | ---- --- | ---- --- |
| 23-54-74 | SPRING, Tailgate Window Regulator | | | | | | |
| | Sub. | 1 | 1779 645 | 1779 645 | ---- --- | 1779 645 | ---- --- |
| 23-54-75 | FLAP, Tailgate Handle | | | | | | |
| | Sub. | 1 | 2080 673 | 2080 673 | ---- --- | 2080 673 | ---- --- |
| 23-54-79 | RETAINER, Tailgate Manual Window Regulator Handle Knob | | | | | | |
| | Sub. | 1 | 1775 164 | 1775 164 | ---- --- | ---- --- | ---- --- |
| 23-54-90 | PIN, Tailgate Window Regulator Arm Roller | | | | | | |
| | Sub. | 2 | 1960 969 | 1960 969 | ---- --- | 1960 969 | ---- --- |
| 23-54-94 | SCREW and WASHER, Tailgate Window Regulator to Mounting Plate | | | | | | |
| | Sub. | 4 | 6006 082 | 6006 082 | ---- --- | 6006 082 | ---- --- |

★ Indicates use as required.
⊟ Indicates parts not listed in any previous parts book.
Dec. 9, 1960 Supersedes April 20, 1960.



Printed in U.S.A.
Prices and specifications subject to change without notice.
* Indicates change or addition.
MyMopar.com

| CODE | REMARKS | PER CAR | PLYMOUTH | DODGE | DESOTO | CHRYSLER | IMPERIAL |
|---|---|---|---|---|---|---|---|
| **23-54-0** | **TAILGATE - Cont'd** | | | | | | |
| 23-54-96 | CLIP, Tailgate Ornament or Medallion | | | | | | |
| | Sub. | 3 | 6000 020 | 6000 020 | ---- --- | ---- --- | ---- --- |
| | CLIP, Tailgate Name Letters | | | | | | |
| | Sub. | 10 | ---- --- | 6010 174 | ---- --- | ---- --- | ---- --- |
| 23-54-103 | BUMPER, Tailgate Window Down Position Stop | | | | | | |
| | Sub. | 2 | 1381 435 | 1381 435 | ---- --- | 1381 435 | ---- --- |
| 23-54-137 | CAM, Tailgate Hinge Torsion Bar | | | | | | |
| | Sub. | 1 | 1960 197 | 1960 197 | ---- --- | 1960 197 | ---- --- |
| 23-54-140 | BAR, Tailgate Hinge Torsion | | | | | | |
| | Sub. | 1 | 1960 194 | 1960 194 | ---- --- | 1960 194 | ---- --- |
| 23-54-142 | BEARING, Tailgate Hinge Torsion Bar | | | | | | |
| | Sub. | 1 | 1960 187 | 1960 187 | ---- --- | 1960 187 | ---- --- |
| 23-54-144 | CLAMP, Tailgate Hinge Torsion Bar | | | | | | |
| | Sub. | 1 | 1960 195 | 1960 195 | ---- --- | 1960 195 | ---- --- |
| 23-54-145 | ROLLER, Tailgate Hinge Torsion Bar | | | | | | |
| | Sub. | 1 | 1960 196 | 1960 196 | ---- --- | 1960 196 | ---- --- |
| 23-54-146 | RETAINER, Tailgate Down Position Bumper | | | | | | |
| | Sub. Pkg. | 2 | 2196 467 | 2196 467 | ---- --- | 2196 467 | ---- --- |
| | NUT and WASHER | 4 | 6010 048 | 6010 048 | ---- --- | 6010 048 | ---- --- |
| 23-54-147 | BUMPER, Tailgate Down Position | | | | | | |
| | Sub. | 2 | 1877 931 | 1877 931 | ---- --- | 1877 931 | ---- --- |
| 23-54-148 | NUT and WASHER, Tailgate Down Position Bumper Retainer Attaching | | | | | | |
| | Sub. | 4 | 6010 048 | 6010 048 | ---- --- | 6010 048 | ---- --- |
| 23-54-150 | COVER, Tailgate Inside, Steel | | | | | | |
| | Sub. | 1 | 1877 855 | 1877 855 | ---- --- | 1877 855 | ---- --- |
| 23-54-152 | SHAFT or COUPLING, Tailgate Electric Window Lift Motor to Mechanism | | | | | | |
| | Sub. | 1 | 1778 955 | 1778 955 | ---- --- | 1778 955 | ---- --- |
| 23-54-154 | SCREW and WASHER, Tailgate Electric Window Lift Motor Mounting | | | | | | |
| | Sub. | 2 | 6006 070 | 6006 070 | ---- --- | 6006 070 | ---- --- |
| 23-54-156 | REPAIR PACKAGE, Tailgate Electric Window Lift Mechanism | | | | | | |
| | Sub. | 1 | ⊟2275 141 | ⊟2275 141 | ---- --- | ⊟2275 141 | ---- --- |
| 23-54-158 | BRUSH and SPRING PACKAGE, Tailgate Electric Window Lift Motor | | | | | | |
| | Sub. | 1 | 1688 692 | 1688 692 | ---- --- | 1688 692 | ---- --- |
| 23-54-159 | RELAY, Tailgate Electric Window Lift Switch Lock | | | | | | |
| | Sub., used w/Child Guard | 1 | ---- --- | ⊟2197 164 | ---- --- | ---- --- | ---- --- |
| 23-54-160 | MOTOR, Tailgate Electric Window Lift | | | | | | |
| | Sub. | 1 | 2093 964 | 2093 964 | ---- --- | 2093 964 | ---- --- |
| 23-54-163 | LINK, Tailgate Electric Window Lift Lock Switch | | | | | | |
| | Sub. Switch End | 1 | 1972 496 | 1972 496 | ---- --- | | ---- --- |
| | Lock End | 1 | 1972 497 | 1972 497 | ---- --- | | ---- --- |
| 23-54-164 | TURNBUCKLE, Tailgate Electric Window Lift Lock Switch Links | | | | | | |
| | Sub. | 1 | 1819 190 | 1819 190 | ---- --- | 1819 190 | ---- --- |
| 23-54-165 | MECHANISM, Tailgate Electric Window Lift | | | | | | |
| | Sub. | 1 | 2094 012 | 2094 012 | ---- --- | 2094 012 | ---- --- |
| 23-54-167 | SWITCH, Tailgate Electric Window Lift | | | | | | |
| | Sub. On Instrument Panel | 1 | 1972 316 | 2096 373 | ---- --- | 2097 045 | ---- --- |
| | Third Seat Passengers, On Head Liner, Includes BEZEL | 1 | 2097 626 | 2097 626 | ---- --- | 2097 626 | ---- --- |
| | Less Bezel | 1 | 2097 625 | 2097 625 | ---- --- | 2097 625 | ---- --- |
| | Lock, in Tailgate | 1 | 1887 041 | 1887 041 | ---- --- | 1887 041 | ---- --- |
| | Limit, on Tailgate | 1 | 1887 946 | 1887 946 | ---- --- | 1887 946 | ---- --- |
| 23-54-168 | LEVER, Tailgate Electric Window Lift Lock Switch | | | | | | |
| | Sub. | 1 | 1819 182 | 1819 182 | ---- --- | 1819 182 | ---- --- |



MyMopar.com

| CODE | REMARKS | PER CAR | PLYMOUTH | DODGE | DESOTO | CHRYSLER | IMPERIAL |
|---|---|---|---|---|---|---|---|
| **23-54-0 TAIL GATE -Cont'd** | | | | | | | |
| 23-54-169 | KNOB, Tailgate Electric Window Lift Instrument Panel Switch | | | | | | |
| | Sub., D3, D4 | 1 | 1887 591 | 2096 309 | ---- --- | 2197 075 | ---- --- |
| | D1, D2 | 1 | ---- --- | 1887 860 | ---- --- | ---- --- | ---- --- |
| 23-54-170 | BEZEL, Tailgate Electric Window Lift Instrument Panel Switch | | | | | | |
| | Sub. | 1 | ---- --- | 1887 789 | ---- --- | ---- --- | ---- --- |
| 23-54-171 | NUT, Tailgate Electric Window Lift Instrument Panel Switch Mounting | | | | | | |
| | Sub. | 1 | 1887 603 | 1972 548 | ---- --- | ---- --- | ---- --- |
| | NUT, Tailgate Electric Window Lift Lock Switch Mounting | | | | | | |
| | Sub. | 1 | 1439 758 | 1439 758 | ---- --- | 1439 758 | ---- --- |
| 23-54-172 | CLIP, Tailgate Electric Window Lift Lock Switch Link Mounting | | | | | | |
| | Sub. Lock End | 1 | 1652 092 | 1652 092 | ---- --- | 1652 092 | ---- --- |
| | Switch End | 1 | 6008 145 | 6008 145 | ---- --- | 6008 145 | ---- --- |
| | SPRING, Tailgate Electric Window Lift Third Seat Passengers Switch to Headliner Retaining | | | | | | |
| | Sub. | 4 | 1769 327 | 1769 327 | ---- --- | 1769 327 | ---- --- |
| 23-54-173 | CONNECTOR, Electric Tailgate Window Lift Switch Single | | | | | | |
| | Sub. | 1 | 2096 905 | 2096 905 | ---- --- | 2096 905 | ---- --- |
| 23-54-176 | CIRCUIT BREAKER, Tailgate Electric Window Lift | | | | | | |
| | Sub. 30 amp. | 1 | 1689 022 | 1689 022 | ---- --- | 1689 022 | ---- --- |
| 23-54-177 | CLIP, Tailgate Electric Window Lift Circuit Breaker Mounting | | | | | | |
| | Sub. | 1 | 6015 159 | 6015 159 | ---- --- | 6015 159 | ---- --- |
| 23-54-180 | HANDLE, Tailgate Lock Remote Control | | | | | | |
| | Sub. | 1 | 1902 406 | 1902 406 | ---- --- | 1902 406 | ---- --- |
| 23-54-184 | ROD, Tailgate Lock Remote Control Handle to Lock | | | | | | |
| | Sub. | 1 | 1961 125 | 1961 125 | ---- --- | 1961 125 | ---- --- |
| 23-54-186 | SPRING, Tailgate Lock Remote Control Handle Anti-Rattle | | | | | | |
| | Sub. | 1 | 1902 409 | 1902 409 | ---- --- | 1902 409 | ---- --- |
| 23-54-190 | PIN, Tailgate Lock Remote Control Handle Attaching | | | | | | |
| | Sub. | 1 | 1902 410 | 1902 410 | ---- --- | 1902 410 | ---- --- |
| 23-54-193 | BEARING, Tailgate Lock Remote Control Handle to Lock Rod | | | | | | |
| | Sub. | 2 | 1961 118 | 1961 118 | ---- --- | 1961 118 | ---- --- |
| 23-54-194 | RETAINER, Tailgate Lock Remote Control Handle to Rod Bearing | | | | | | |
| | Sub. | 2 | 1961 119 | 1961 119 | ---- --- | 1961 119 | ---- --- |
| 23-54-195 | SCREW, Tailgate Handle to Latch Pin | | | | | | |
| | Sub. | 3 | 1902 297 | 1902 297 | ---- --- | 1902 297 | ---- --- |
| 23-54-200 | ARMATURE, Tailgate Electric Window Lift Motor | | | | | | |
| | Sub. | 1 | 1818 900 | 1818 900 | ---- --- | 1818 900 | ---- --- |
| 23-54-206 | HEAD, Tailgate Electric Window Lift Motor Commutator End | | | | | | |
| | Sub. | 1 | 1818 866 | 1818 866 | ---- --- | 1818 866 | ---- --- |
| 23-54-212 | COIL, Tailgate Electric Window Lift Motor Field | | | | | | |
| | Sub. | 1 | 1818 864 | 1818 864 | ---- --- | 1818 864 | ---- --- |



MyMopar.com

| CODE | REMARKS | PER CAR | PLYMOUTH | DODGE | DESOTO | CHRYSLER | IMPERIAL |
|---|---|---|---|---|---|---|---|
| **23-58-0** | **FOLDING TOP** | | | | | | |
| 23-58-3 | TOP, Folding | | | | | | |
| | Cv. Cp. | 1 | 1952 312 | 1952 312 | ---- --- | 1952 313 | 2094 745 |
| NOTE: | Above assemblies less lift Mechanism and Trim. | | | | | | |
| 23-58-66 | SCREW, Folding Top Rear Bow to Wheelhouse Bracket Tension Cable | | | | | | |
| | Cv. Cp. | 2 | 2165 664 | 2165 664 | ---- --- | 2165 664 | ---- --- |
| | BOLT, Folding Top Rear Bow to Wheelhouse Bracket Tension Cable | | | | | | |
| | Cv. Cp. | 2 | ⊟6022 169 | ⊟6022 169 | ---- --- | ⊟6022 169 | ---- --- |
| 23-58-67 | BRACKET, Folding Top Quarter Belt Bar Bow Tension Cable | | | | | | |
| | Cv. Cp. | 2 | 1954 604 | 1954 604 | ---- --- | 1954 604 | ---- --- |
| 23-58-75 | BOW, Folding Top | | | | | | |
| | Cv. Cp. No. 1 | 1 | 1964 078 | 1964 078 | ---- --- | 1964 078 | 1691 415 |
| | No. 2 | 1 | 1964 073 | 1964 073 | ---- --- | 1964 073 | 1691 397 |
| | Rear | 1 | 1952 195 | 1952 195 | ---- --- | 1952 195 | 1691 400 |
| 23-58-76 | LINK, Folding Top Rear Bow | | | | | | |
| | Cv. Cp. Right | 1 | 1950 500 | 1950 500 | ---- --- | 1950 502 | ---- --- |
| | Left | 1 | 1950 501 | 1950 501 | ---- --- | 1950 503 | ---- --- |
| | EXTENSION, Folding Top Rear Bow | | | | | | |
| | Cv. Cp. Right | 1 | ---- --- | ---- --- | ---- --- | ---- --- | 1691 902 |
| | Left | 1 | ---- --- | ---- --- | ---- --- | ---- --- | 1691 903 |
| 23-58-78 | PLATE, Folding Top Number One Bow Bracket to Link Adjusting | | | | | | |
| | Cv. Cp. | 2 | 1909 914 | 1909 914 | ---- --- | 1909 914 | ---- --- |
| 23-58-85 | BRACKET, Folding Top Header Rear Bow Down Stop | | | | | | |
| | Cv. Cp., D2 | 2 | ---- --- | 2165 669 | ---- --- | ---- --- | ---- --- |
| 23-58-195 | TERMINAL BLOCK, Folding Top Lift Wiring | | | | | | |
| | Cv. Cp. On Floor Pan | 1 | ---- --- | 913 297 | ---- --- | 913 297 | 913 297 |
| 23-58-200 | CYLINDER, Folding Top Lift | | | | | | |
| | Cv. Cp. | 2 | 1952 938 | 1952 938 | ---- --- | 1952 938 | ---- --- |
| | Right | 1 | ---- --- | ---- --- | ---- --- | ---- --- | 1770 553 |
| | Left | 1 | ---- --- | ---- --- | ---- --- | ---- --- | 1770 552 |
| 23-58-208 | BRACKET, Folding Top Lift Cylinder Floor Pan Mounting | | | | | | |
| | Cv. Cp. | 2 | 1952 939 | 1952 939 | ---- --- | 1952 939 | 1861 392 |
| 23-58-211 | YOKE, Folding Top Cylinder to Power Link | | | | | | |
| | Cv. Cp. | 2 | *1249 525 | *1249 525 | ---- --- | *1249 525 | ---- --- |
| 23-58-220 | HEADER, Folding Top | | | | | | |
| | Cv. Cp. | 1 | 2166 338 | 2166 338 | ---- --- | 2166 338 | 1751 094 |
| 23-58-224 | RETAINER, Folding Top Trim, on Belt Bar | | | | | | |
| | Cv. Cp. Right | 1 | ---- --- | ---- --- | ---- --- | 1963 552 | 1877 746 |
| | Left | 1 | ---- --- | ---- --- | ---- --- | 1963 553 | 1877 747 |
| 23-58-225 | BRACKET, Folding Top Trim Fastener, on Front Side Rail | | | | | | |
| | Cv. Cp. Right | 1 | ---- --- | ---- --- | ---- --- | ---- --- | 1810 588 |
| | Left | 1 | ---- --- | ---- --- | ---- --- | ---- --- | 1810 589 |
| 23-58-227 | MECHANISM, Folding Top Header Locking | | | | | | |
| | Cv. Cp. | 1 | 2166 049 | 2166 049 | ---- --- | 2166 049 | ---- --- |
| 23-58-228 | DOWEL, Folding Top Header | | | | | | |
| | Cv. Cp. | 2 | 1909 466 | 1909 466 | ---- --- | 1909 466 | 6006 235 |
| 23-58-229 | RETAINER, Folding Top Header Dowel Lock Nut | | | | | | |
| | Cv. Cp. | 2 | ---- --- | ---- --- | ---- --- | ---- --- | 1691 911 |
| 23-58-232 | COVER, Folding Top Header Lock Mechanism Access Hole | | | | | | |
| | Cv. Cp. 6 7/16" Long | 1 | ---- --- | ---- --- | ---- --- | ---- --- | 1750 777 |
| | COVER, Folding Top Header Lock Access Hole | | | | | | |
| | Cv. Cp. 7 3/8" Long, Right | 1 | ---- --- | ---- --- | ---- --- | ---- --- | 1750 854 |
| | Left | 1 | ---- --- | ---- --- | ---- --- | ---- --- | 1750 855 |



MyMopar.com

| CODE | REMARKS | PER CAR | PLYMOUTH | DODGE | DESOTO | CHRYSLER | IMPERIAL |
|---|---|---|---|---|---|---|---|
| **23-58-0 FOLDING TOP - Cont'd** | | | | | | | |
| 23-58-234 | CLIP, Folding Top Header Lock Torsion Bar to Link | | | | | | |
| | Cv.Cp. | 1 | ---- --- | ---- --- | ---- --- | ---- --- | 6006 221 |
| 23-58-237 | SEAL, Folding Top Header Dowel | | | | | | |
| | Cv. Cp. | 2 | 1964 981 | 1964 981 | ---- --- | 1964 981 | ---- --- |
| | SEAL, Windshield Header | | | | | | |
| | Cv. Cp. 60" lgh. | 1 | *2094 559 | *2094 559 | ---- --- | *2094 559 | ---- --- |
| 23-58-240 | PANEL, Folding Top Header Outside Finish | | | | | | |
| | Cv. Cp. | 1 | 1954 020 | 1954 020 | ---- --- | 1954 020 | 1954 020 |
| | MOULDING, Folding Top Header Outside Finish | | | | | | |
| | Cv.Cp. Pkg. | 1 | ---- --- | ---- --- | ---- --- | ---- --- | 2196 483 |
| | SCREW | 11 | ---- --- | ---- --- | ---- --- | ---- --- | 274 110 |
| | SCREW | 2 | ---- --- | ---- --- | ---- --- | ---- --- | 162 289 |
| 23-58-242 | CLIP, Folding Top Header Outside Finish Panel | | | | | | |
| | Cv. Cp. | 5 | 6000 680 | 6000 680 | ---- --- | 6000 680 | ---- --- |
| | End | 2 | 6000 681 | 6000 681 | ---- --- | 6000 681 | ---- --- |
| 23-58-243 | HANDLE, Folding Top Header Lock | | | | | | |
| | Cv.Cp. | 1 | ---- --- | ---- --- | ---- --- | ---- --- | 1751 156 |
| 23-58-245 | PIN, Folding Top Header Lock Handle to Torsion Bar Link | | | | | | |
| | Cv.Cp. | 1 | ---- --- | ---- --- | ---- --- | ---- --- | 6006 222 |
| 23-58-248 | RETAINER, Folding Top Header Lock Handle to Escutcheon Pin | | | | | | |
| | Cv.Cp. | 2 | ---- --- | ---- --- | ---- --- | ---- --- | 1750 724 |
| 23-58-253 | ESCUTCHEON, Folding Top Header Lock Handle | | | | | | |
| | Cv.Cp. | 1 | ---- --- | ---- --- | ---- --- | ---- --- | 1751 173 |
| 23-58-257 | LINK, Folding Top Header Lock Handle to Torsion Bar | | | | | | |
| | Cv.Cp. | 1 | ---- --- | ---- --- | ---- --- | ---- --- | 1750 619 |
| 23-58-265 | CATCH, Folding Top Header Locking Latch | | | | | | |
| | Cv. Cp. | 2 | 1964 895 | 1964 895 | ---- --- | 1964 895 | ---- --- |
| | CATCH, Folding Top Header Lock Safety | | | | | | |
| | Cv.Cp. | 1 | ---- --- | ---- --- | ---- --- | ---- --- | 1751 264 |
| 23-58-266 | SPRING, Folding Top Header Lock Safety Catch to Handle | 1 | ---- --- | ---- --- | ---- --- | ---- --- | 1751 262 |
| 23-58-269 | LINKAGE, Folding Top Side Rail | | | | | | |
| | Cv.Cp. Right | 1 | 1964 076 | 1964 076 | ---- --- | 1964 074 | 1751 206 |
| | Left | 1 | 1964 077 | 1964 077 | ---- --- | 1964 075 | 1751 207 |
| 23-58-327 | LINK, Folding Top Power | | | | | | |
| | Cv.Cp. | 2 | 1952 559 | 1952 559 | ---- --- | ---- --- | ---- --- |
| | Right | 1 | ---- --- | ---- --- | ---- --- | 1952 730 | ---- --- |
| | Left | 1 | ---- --- | ---- --- | ---- --- | 1952 731 | ---- --- |
| 23-58-333 | LINK, Folding Top Power Guide | | | | | | |
| | Cv.Cp. | 2 | 1952 602 | 1952 602 | ---- --- | 1952 557 | ---- --- |
| | Inner, Includes Power LINK | 2 | ---- --- | ---- --- | ---- --- | ---- --- | 1751 210 |
| | Outer | 2 | ---- --- | ---- --- | ---- --- | ---- --- | 1750 400 |
| 23-58-335 | TAPPING PLATE, Folding Top Power Guide Link Support | | | | | | |
| | Cv. Cp. | 2 | 6000 388 | 6000 388 | ---- --- | 6000 388 | ---- --- |
| | TAPPING PLATE, Folding Top Main Control Prop Support | | | | | | |
| | Cv. Cp. | 2 | 6000 388 | 6000 388 | ---- --- | 6000 388 | ---- --- |
| 23-58-336 | SUPPORT, Folding Top Power Guide Link | | | | | | |
| | Cv.Cp. | 2 | 1708 914 | 1708 914 | ---- --- | 1708 914 | ---- --- |
| | SUPPORT, Folding Top Main Control Prop | | | | | | |
| | Cv.Cp. | 2 | 1708 914 | 1708 914 | ---- --- | 1708 914 | ---- --- |
| 23-58-357 | MOTOR, Folding Top Lift | | | | | | |
| | Cv.Cp. Less Pump | 1 | 2094 107 | 2094 107 | ---- --- | 2094 107 | 2094 107 |
| | Includes PUMP | 1 | 1648 340 | 1648 340 | ---- --- | 1648 340 | 1648 340 |
| 23-58-364 | PLUG, Folding Top Well Drain Valve | | | | | | |
| | Cv. Cp. | 1 | 1977 449 | 1977 449 | ---- --- | 1977 449 | 1977 449 |


MyMopar.com

| CODE | REMARKS | PER CAR | PLYMOUTH | DODGE | DESOTO | CHRYSLER | IMPERIAL |
|---|---|---|---|---|---|---|---|
| **23-58-0 FOLDING TOP - Cont'd** | | | | | | | |
| 23-58-365 | RETAINER, Folding Top Well Drain Plug | | | | | | |
| | Cv. Cp. | 1 | 1977 448 | 1977 448 | ---- --- | 1977 448 | 1977 448 |
| 23-58-375 | "O" RING, Folding Top Lift Motor Pump Drive Shaft | | | | | | |
| | Cv.Cp. | 1 | 1641 590 | 1641 590 | ---- --- | 1641 590 | 1641 590 |
| 23-58-379 | CIRCUIT BREAKER, Folding Top Lift | | | | | | |
| | Cv.Cp. 30 amp. | 1 | 1689 022 | 1689 022 | ---- --- | 1689 022 | 1689 022 |
| 23-58-381 | ROTOR PACKAGE, Folding Top Lift Pump | | | | | | |
| | Cv.Cp. | 1 | ---- --- | ---- --- | ---- --- | ---- --- | 1641 650 |
| 23-58-393 | SUPPORT, Folding Top Lift Motor and Pump Floor Pan | | | | | | |
| | Cv.Cp. | 1 | ---- --- | ---- --- | ---- --- | ---- --- | 1878 112 |
| 23-58-394 | PILLAR or RAIL, Folding Top Folding | | | | | | |
| | Cv.Cp. Right | 1 | 1884 584 | 1884 584 | ---- --- | 1884 586 | 1691 946 |
| | Left | 1 | 1884 585 | 1884 585 | ---- --- | 1884 587 | 1691 947 |
| 23-58-395 | PLUG, Folding Top Lift Pump Reservoir Filler | | | | | | |
| | Cv.Cp. Includes "O" RING | 1 | 1641 579 | 1641 579 | ---- --- | 1641 579 | 1641 579 |
| 23-58-396 | BRACKET, Folding Top Lift Motor Mounting | | | | | | |
| | Cv.Cp. | 1 | 1641 578 | 1641 578 | ---- --- | 1641 578 | 1641 578 |
| 23-58-430 | PLATE, Folding Top Lift Pump Cover | | | | | | |
| | Cv.Cp. Includes Valve Rocker ARM | 1 | 1641 592 | 1641 592 | ---- --- | 1641 592 | 1641 592 |
| | PLATE, Folding Top Lift Pump End | | | | | | |
| | Cv.Cp. Includes BUSHING | 1 | 1641 586 | 1641 586 | ---- --- | 1641 586 | 1641 586 |
| 23-58-469 | PROP, Folding Top Main Control | | | | | | |
| | Cv.Cp. Right | 1 | 1884 580 | 1884 580 | ---- --- | 1884 582 | ---- --- |
| | Left | 1 | 1884 581 | 1884 581 | ---- --- | 1884 583 | ---- --- |
| | LINK, Folding Top Main Control | | | | | | |
| | Cv.Cp. Includes Adjusting PLATE, Right | 1 | ---- --- | ---- --- | ---- --- | ---- --- | 1751 208 |
| | Left | 1 | ---- --- | ---- --- | ---- --- | ---- --- | 1751 209 |
| 23-58-472 | BRACKET, Folding Top Folding Rail Pivot | | | | | | |
| | Cv.Cp. Right | 1 | ---- --- | ---- --- | ---- --- | ---- --- | 1691 948 |
| | Left | 1 | ---- --- | ---- --- | ---- --- | ---- --- | 1691 949 |
| 23-58-473 | SUPPORT, Folding Top Folding Pillar to Body | | | | | | |
| | Cv.Cp. Right | 1 | 1884 608 | 1884 608 | ---- --- | 1884 608 | ---- --- |
| | Left | 1 | 1884 609 | 1884 609 | ---- --- | 1884 609 | ---- --- |
| | BRACKET, Folding Top Folding Rail Pivot Bracket to Body Mounting Support | | | | | | |
| | Cv.Cp. Right | 1 | ---- --- | ---- --- | ---- --- | ---- --- | 1750 406 |
| | Left | 1 | ---- --- | ---- --- | ---- --- | ---- --- | 1750 407 |
| 23-58-475 | PLATE, Folding Top Main Control Prop Support Plate Adjustment | | | | | | |
| | Cv.Cp. | 2 | 1954 824 | 1954 824 | ---- --- | 1954 824 | ---- --- |
| 23-58-476 | BRACE, Folding Top Main Control Prop Body | | | | | | |
| | Cv.Cp. Right | 1 | 1884 504 | 1884 506 | ---- --- | 1884 508 | ---- --- |
| | Left | 1 | 1884 505 | 1884 507 | ---- --- | 1884 509 | ---- --- |
| | SUPPORT, Folding Top Main Control Link and Pivot Bracket Mounting Bracket Body | | | | | | |
| | Cv.Cp. Right | 1 | ---- --- | ---- --- | ---- --- | ---- --- | 1961 088 |
| | Left | 1 | ---- --- | ---- --- | ---- --- | ---- --- | 1961 089 |
| 23-58-480 | REINFORCEMENT, Folding Top Folding Rail Pivot Bracket Mounting Bracket to Body Mounting | | | | | | |
| | Cv.Cp. | 2 | ---- --- | ---- --- | ---- --- | ---- --- | *1751 810 |
| | REINFORCEMENT, Folding Top Main Control Link Adjustment Plate Body | | | | | | |
| | Cv.Cp. Right | 1 | ---- --- | ---- --- | ---- --- | ---- --- | 1751 806 |
| | Left | 1 | ---- --- | ---- --- | ---- --- | ---- --- | 1751 807 |
| 23-58-486 | RAIL, Folding Top Side | | | | | | |
| | Cv. Cp. Front Right | 1 | 1884 588 | 1884 588 | ---- --- | 1884 592 | 2094 466 |
| | Left | 1 | 1884 589 | 1884 589 | ---- --- | 1884 593 | 2094 467 |
| | Rear Right | 1 | 1884 590 | 1884 590 | ---- --- | 1884 594 | 2094 472 |
| | Left | 1 | 1884 591 | 1884 591 | ---- --- | 1884 595 | 2094 473 |


MyMopar.com

## 23-58-0 FOLDING TOP - Cont'd

| CODE | REMARKS | PER CAR | PLYMOUTH | DODGE | DESOTO | CHRYSLER | IMPERIAL |
|---|---|---|---|---|---|---|---|
| 23-58-487 | BUSHING, Folding Top Folding Rail to Body Pivot Bracket Pin | | | | | | |
| | Cv.Cp. | 2 | ---- --- | ---- --- | ---- --- | ---- --- | 1810 440 |
| | BUSHING, Folding Top Side Rail Link to Rear Rail Pin | | | | | | |
| | Cv.Cp. | 2 | ---- --- | ---- --- | ---- --- | ---- --- | 1750 647 |
| 23-58-497 | CAP, Folding Top Front Side Rail to Header Joint | | | | | | |
| | Cv.Cp. | 2 | 1950 486 | 1950 486 | ---- --- | 1950 486 | ---- --- |
| 23-58-532 | SWITCH, Folding Top Lift | | | | | | |
| | Cv.Cp. | 1 | 1972 316 | 2096 373 | ---- --- | 1972 318 | 1972 319 |
| 23-58-533 | NUT, Folding Top Lift Switch Mounting | | | | | | |
| | Cv.Cp. | 1 | 1887 603 | 1972 548 | ---- --- | 1971 521 | ---- --- |
| 23-58-534 | KNOB, Folding Top Lift Switch | | | | | | |
| | Cv. Cp., D2 | 1 | 1887 591 | 1887 860 | ---- --- | 2197 075 | 1887 935 |
| | D4 | 1 | ---- --- | 2096 309 | ---- --- | ---- --- | ---- --- |
| 23-58-535 | HOUSING, Folding Top Lift Switch | | | | | | |
| | Cv.Cp. | 1 | ---- --- | ---- --- | ---- --- | 1972 146 | ---- --- |
| 23-58-543 | BEZEL, Folding Top Lift Switch | | | | | | |
| | Cv.Cp. | 1 | ---- --- | 2197 501 | ---- --- | 1972 489 | ---- --- |
| 23-58-555 | HOSE, Folding Top Lift Pump to Cylinder | | | | | | |
| | Cv. Cp. Upper | 1 | 1964 402 | 1964 402 | ---- --- | 1964 402 | 1964 402 |
| | Lower | 1 | 1964 402 | 1964 402 | ---- --- | 1964 402 | 2094 119 |
| 23-58-569 | WEATHERSTRIP, Folding Top Header | | | | | | |
| | Cv.Cp. | 1 | 1950 842 | 1950 842 | ---- --- | 1950 842 | ---- --- |
| | Inner | 1 | ---- --- | ---- --- | ---- --- | ---- --- | 1751 733 |
| | Outer | 1 | ---- --- | ---- --- | ---- --- | ---- --- | *1860 995 |
| | Upper Corner Moulding, Right | 1 | ---- --- | ---- --- | ---- --- | ---- --- | 1861 334 |
| | Left | 1 | ---- --- | ---- --- | ---- --- | ---- --- | 1861 335 |
| 23-58-572 | WEATHERSTRIP, Folding Top Side Rail | | | | | | |
| | Cv.Cp. Front Right | 1 | 1950 844 | 1950 844 | ---- --- | 1950 846 | 1810 002 |
| | Left | 1 | 1950 845 | 1950 845 | ---- --- | 1950 847 | 1810 003 |
| | Rear Right | 1 | 1950 848 | 1950 848 | ---- --- | 1950 850 | 1810 004 |
| | Left | 1 | 1950 849 | 1950 849 | ---- --- | 1950 851 | 1810 005 |
| 23-58-573 | RETAINER, Folding Top Side Rail Weather-strip | | | | | | |
| | Cv.Cp. Front Right | 1 | 1954 942 | 1954 942 | ---- --- | 1954 944 | ---- --- |
| | Left | 1 | 1954 942 | 1954 942 | ---- --- | 1954 944 | ---- --- |
| | Rear Right | 1 | 1954 938 | 1954 938 | ---- --- | 1954 940 | ---- --- |
| | Left | 1 | 1954 939 | 1954 939 | ---- --- | 1954 941 | ---- --- |
| 23-58-590 | WEATHERSTRIP, Folding Top Folding Pillar or Rail | | | | | | |
| | Cv.Cp. Right | 1 | 1950 852 | 1950 852 | ---- --- | 1950 854 | 1810 006 |
| | Left | 1 | 1950 853 | 1950 853 | ---- --- | 1950 855 | 1810 007 |
| 23-58-591 | RETAINER, Folding Top Folding Pillar Weatherstrip | | | | | | |
| | Cv.Cp. Right | 1 | 1954 934 | 1954 934 | ---- --- | 1954 936 | ---- --- |
| | Left | 1 | 1954 935 | 1954 935 | ---- --- | 1954 937 | ---- --- |
| 23-58-603 | SCREW, Folding Top Side Rear Rail | | | | | | |
| | Cv.Cp. | 2 | 1964 260 | 1964 260 | ---- --- | 1964 260 | ---- --- |
| | BOLT, Folding Top Power Guide Link | | | | | | |
| | Cv.Cp. | 2 | 1954 765 | 1954 765 | ---- --- | 1954 765 | ---- --- |
| | BOLT, Folding Top Main Control Prop | | | | | | |
| | Cv.Cp. | 2 | 1954 765 | 1954 765 | ---- --- | 1954 765 | ---- --- |
| | SCREW, Folding Top Header Lock Torsion Bar Adjusting | | | | | | |
| | Cv.Cp. | 2 | ---- --- | ---- --- | ---- --- | ---- --- | 1750 726 |
| | BOLT, Folding Top Control Link Adjusting Plate | | | | | | |
| | Cv.Cp. | 2 | ---- --- | ---- --- | ---- --- | ---- --- | 6006 224 |



MyMopar.com

| CODE | REMARKS | PER CAR | PLYMOUTH | DODGE | DESOTO | CHRYSLER | IMPERIAL |
|---|---|---|---|---|---|---|---|
| **23-58-0 FOLDING TOP - Cont'd** | | | | | | | |
| 23-58-605 | SPACER or WASHER, Folding Top | | | | | | |
| | Cv.Cp. | | | | | | |
| | O.D. I.D. THICKNESS MATERIAL | | | | | | |
| | 7/8" 7/16" 15/64" Rubber | 4 | 1249 332 | 1249 332 | ---- --- | 1249 332 | ---- --- |
| | 1" 17/32" 1/16" Fibre | 6 | 1706 470 | 1706 470 | ---- --- | 1706 470 | ---- --- |
| | 1" 19/32" 1/8" Fibre | 4 | 1952 983 | 1952 983 | ---- --- | 1952 983 | ---- --- |
| | 5/8" 25/64" 1/16" Steel | 2 | 6000 320 | 6000 320 | ---- --- | 6000 320 | ---- --- |
| | 7/8" 7/16" 7/64" Leather | 4 | ---- --- | ---- --- | ---- --- | ---- --- | 6000 141 |
| | 13/16" 3/8" 13/64" Plastic | 2 | 6006 204 | 6006 204 | ---- --- | 6006 204 | 6006 204 |
| | X-WASHER, Folding Top | | | | | | |
| | Cv.Cp. | 2 | ---- --- | ---- --- | ---- --- | ---- --- | 6006 052 |
| 23-58-606 | SPRING WASHER, Folding Top | | | | | | |
| | Cv. Cp. 7/8" O.D. x 19/32" I.D. | ★ | 6000 098 | 6000 098 | ---- --- | 6000 098 | ---- --- |
| | 3/4" O.D. x 25/64" I.D. | ★ | ---- --- | ---- --- | ---- --- | ---- --- | 6006 216 |
| 23-58-607 | PIN, Folding Top | | | | | | |
| | Cv.Cp. No. 1 Bow Bracket | 2 | 1950 897 | 1950 897 | ---- --- | 1950 897 | ---- --- |
| | No. 1 Bow Bracket to Front Side Rail | 2 | 1952 315 | 1952 315 | ---- --- | 1952 315 | ---- --- |
| | No. 1 Bow Bracket to Rear Side Rail | 2 | 1952 315 | 1952 315 | ---- --- | 1952 315 | ---- --- |
| | Shoulder Prop to Main Control | 2 | 1952 315 | 1952 315 | ---- --- | 1952 315 | ---- --- |
| | Front and Rear Side Rail Connector | 2 | 1952 315 | 1952 315 | ---- --- | 1952 315 | ---- --- |
| | Rear Side Rail Hinge to Folding Pillar | 2 | 1952 779 | 1952 779 | ---- --- | 1952 779 | ---- --- |
| | Rear Bow | 2 | 1952 984 | 1952 984 | ---- --- | 1952 984 | ---- --- |
| | Front to Rear Side Rail | 2 | 6000 319 | 6000 319 | ---- --- | 6000 319 | ---- --- |
| | Lift Cylinder Mounting Bracket | 2 | 1952 936 | 1952 936 | ---- --- | 1952 936 | ---- --- |
| | to Folding Pillar | 2 | ⊟1952 482 | ⊟1952 482 | ---- --- | ⊟1952 482 | ---- --- |
| | Control Link to Front Rail | 2 | ---- --- | ---- --- | ---- --- | ---- --- | 6006 205 |
| | No. 2 Bow to Rear Side Rail | 2 | ---- --- | ---- --- | ---- --- | ---- --- | 6006 230 |
| | Rear Control Link to Center Side Rail | 2 | ---- --- | ---- --- | ---- --- | ---- --- | 6006 230 |
| | Lift Cylinder Mounting Bracket | 2 | ---- --- | ---- --- | ---- --- | ---- --- | 6006 093 |
| | Control Link to Center Rail | 2 | ---- --- | ---- --- | ---- --- | ---- --- | 6006 223 |
| | Rear Side Rail to Body Bracket | 2 | ---- --- | ---- --- | ---- --- | ---- --- | 6006 226 |
| | Power Link to Rear Rail | 2 | ---- --- | ---- --- | ---- --- | ---- --- | 6006 227 |
| | Power Guide Link to Body Bracket | 2 | ---- --- | ---- --- | ---- --- | ---- --- | 6006 228 |
| | Front to Center Side Rail Pivot | 2 | ---- --- | ---- --- | ---- --- | ---- --- | 6006 229 |
| | Center to Rear Side Rail Pivot | 2 | ---- --- | ---- --- | ---- --- | ---- --- | 6006 231 |
| | Rear Bow to Rear Rail | 2 | ---- --- | ---- --- | ---- --- | ---- --- | 6006 237 |
| **23-59-0 DRAIN TROUGH AND MOULDING** | | | | | | | |
| 23-59-37 | REINFORCEMENT, Deck Opening Side Drain | | | | | | |
| | Trough Right | 1 | ---- --- | ---- --- | ---- --- | ---- --- | 1877 472 |
| | Left | 1 | ---- --- | ---- --- | ---- --- | ---- --- | 1877 473 |
| 23-59-40 | REINFORCEMENT, Quarter Panel Drain | | | | | | |
| | Trough | | | | | | |
| | 4 D., Sp. 4 D., Sp.Cl.Cp., Cv. Cp. | | | | | | |
| | Right | 1 | ---- --- | ---- --- | 1878 758 | 1878 758 | ---- --- |
| | Left | 1 | ---- --- | ---- --- | 1878 759 | 1878 759 | ---- --- |
| 23-59-56 | TROUGH, Quarter Roof Side Drain | | | | | | |
| | Sp.Cl.Cp. Right | 1 | *1952 682 | *1952 682 | ---- --- | ---- --- | ---- --- |
| | Left | 1 | 1952 683 | 1952 683 | ---- --- | ---- --- | ---- --- |
| | TROUGH, Roof Rear Drain | | | | | | |
| | Sub. | 1 | 2094 134 | 2094 134 | ---- --- | 2094 134 | ---- --- |
| 23-59-57 | CAP, Roof Side Drain Trough Moulding | | | | | | |
| | D3-L, D4-L Front Right | 1 | ---- --- | 1964 226 | ---- --- | ---- --- | ---- --- |
| | Left | 1 | ---- --- | 1964 227 | ---- --- | ---- --- | ---- --- |
| 23-59-61 | MOULDING or COVER, Roof Side Drain Trough | | | | | | |
| | 4 D., Cl. Sed., D1, D2 Right | 1 | 1909 624 | 1909 636 | 1909 636 | 2093 648 | 1690 804 |
| | Left | 1 | 1909 625 | 1909 637 | 1909 637 | 2093 649 | 1690 805 |
| | 4 D., Cl.Sed., D3, D4 Right | 1 | ---- --- | 1964 224 | ---- --- | ---- --- | ---- --- |
| | Left | 1 | ---- --- | 1964 225 | ---- --- | ---- --- | ---- --- |
| | Sp.4 D., Sp.4 D.Sub., D1, D2, C1, C2 Right | 1 | ---- --- | 1909 636 | 1909 636 | 2093 648 | 1750 104 |
| | Left | 1 | ---- --- | 1909 637 | 1909 637 | 2093 649 | 1750 105 |
| | Sp.4 D., Sp.4 D.Sub., C3 Right | 1 | ---- --- | ---- --- | ---- --- | *1909 636 | ---- --- |
| | Left | 1 | ---- --- | ---- --- | ---- --- | 1909 637 | ---- --- |
| | Sp.Cl.Cp., P1M, P2M Right | 1 | 1909 626 | 1909 626 | 2093 174 | 2093 174 | 1750 102 |
| | Left | 1 | 1909 627 | 1909 627 | 2093 175 | 2093 175 | 1750 103 |

★ Indicates use as required.
⊟ Indicates parts not listed in any previous parts book.
* Indicates change or addition.



MyMopar.com

Printed in U.S.A.
Prices and specifications subject to change without notice.
Dec. 9, 1960 Supersedes April 20, 1960.

| CODE | REMARKS | | PER CAR | PLYMOUTH | DODGE | DESOTO | CHRYSLER | IMPERIAL |
|---|---|---|---|---|---|---|---|---|
| **23-59-0 DRAIN TROUGH AND MOULDING - Cont'd** | | | | | | | | |
| 23-59-61 | MOULDING OR COVER - Cont'd | | | | | | | |
| | 4 D. Sub., 2 D. Sub., D1 | Right | 1 | 2094 122 | 1909 636 | ---- --- | ---- --- | ---- --- |
| | | Left | 1 | 2094 123 | 1909 637 | ---- --- | ---- --- | ---- --- |
| | 4 D. Sub., D3M, D4M | Right | 1 | ---- --- | 2094 122 | ---- --- | ---- --- | ---- --- |
| | | Left | 1 | ---- --- | 2094 123 | ---- --- | ---- --- | ---- --- |
| **23-61-0 COWL VENT OR AIR INTAKE** | | | | | | | | |
| 23-61-39 | EXTENSION, Dash Panel Cowl Air Intake Water Deflector Panel | | 1 | ---- --- | ---- --- | ---- --- | ---- --- | *1242 974 |
| | DEFLECTOR, Dash Panel Cowl Air Intake Water | | 1 | ---- --- | ---- --- | ---- --- | ---- --- | *1810 088 |
| 23-61-98 | SCREEN, Cowl Vent | Right | 1 | ---- --- | ---- --- | ---- --- | ---- --- | *1751 008 |
| | | Left | 1 | ---- --- | ---- --- | ---- --- | ---- --- | 1751 009 |
| 23-61-99 | CLIP, Cowl Vent Grille Attaching | | 6 | ---- --- | ---- --- | ---- --- | ---- --- | *6006 261 |
| 23-61-103 | GRILLE, Cowl Ventilator | Right | 1 | ---- --- | ---- --- | ---- --- | ---- --- | 1878 644 |
| | | Left | 1 | ---- --- | ---- --- | ---- --- | ---- --- | 1878 645 |
| 23-61-104 | CAP, Cowl Vent Grille | | 1 | ---- --- | ---- --- | ---- --- | ---- --- | *1861 345 |
| 23-61-116 | PANEL, Cowl Top Fresh Air Opening Insert | Steel | 1 | 2165 691 | 2165 691 | 2165 691 | 2165 691 | ---- --- |
| | | Aluminum | 1 | 1909 441 | 1909 441 | 1909 441 | 1909 441 | ---- --- |
| 23-61-119 | PLUG, Cowl Fresh Air Opening Insert Panel | | 2 | *1963 200 | *1963 200 | *1963 200 | *1963 200 | ---- --- |
| **23-63-0 WEATHERSTRIP** | | | | | | | | |
| 23-63-14 | WEATHERSTRIP, Front Door Window Belt Inner | | | | | | | |
| | 4 D., 4 D. Sub., C1, C2 | | 2 | 1883 500 | 1883 500 | 1883 500 | 1883 500 | ---- --- |
| | C3 | Right | 1 | ---- --- | ---- --- | ---- --- | 2085 710 | ---- --- |
| | | Left | 1 | ---- --- | ---- --- | ---- --- | 2085 711 | ---- --- |
| | 4 D. | Right | 1 | ---- --- | ---- --- | ---- --- | ---- --- | 2085 764 |
| | | Left | 1 | ---- --- | ---- --- | ---- --- | ---- --- | 2085 765 |
| | Sp. 4 D., Sp. 4 D. Sub., C1, C2 | Right | 1 | 1952 828 | 1952 828 | 1952 828 | 1952 828 | 2085 780 |
| | | Left | 1 | 1952 829 | 1952 829 | 1952 829 | 1952 829 | 2085 781 |
| | C3 | Right | 1 | ---- --- | ---- --- | ---- --- | 2085 712 | ---- --- |
| | | Left | 1 | ---- --- | ---- --- | ---- --- | 2085 713 | ---- --- |
| 23-63-14 | WEATHERSTRIP, Rear Door Window Belt Inner | | | | | | | |
| | 4 D., D3, D4, C1, C2 | Right | 1 | 1954 680 | 1954 680 | 1883 512 | 1883 512 | ---- --- |
| | | Left | 1 | 1954 681 | 1954 681 | 1883 513 | 1883 513 | ---- --- |
| | D1, D2, C3 | Right | 1 | ---- --- | 1883 512 | ---- --- | 2085 482 | 2085 482 |
| | | Left | 1 | ---- --- | 1883 513 | ---- --- | 2085 482 | 2085 482 |
| | Sp. 4 D., Sp. 4 D. Sub., D1, D2, D4, S1, C1, C2 | | 2 | 1883 518 | 1883 518 | 1883 518 | 1883 518 | 1767 247 |
| | Sp. 4 D., Sp. 4 D. Sub., C3 | | 2 | ---- --- | ---- --- | ---- --- | 2085 482 | ---- --- |
| | WEATHERSTRIP, Door Window Belt Inner | | | | | | | |
| | Sp. Cl. Cp, Cv. Cp., C1, C2 | Right | 1 | 1952 828 | 1952 828 | 1952 828 | 1952 828 | 2085 780 |
| | | Left | 1 | 1952 829 | 1952 829 | 1952 829 | 1952 829 | 2085 781 |
| | C3 | Right | 1 | ---- --- | ---- --- | ---- --- | 2085 722 | ---- --- |
| | | Left | 1 | ---- --- | ---- --- | ---- --- | 2085 723 | ---- --- |
| | Cl. Sed., 2 D. Sub. | | 2 | 1952 826 | 1952 826 | ---- --- | ---- --- | ---- --- |
| 23-63-15 | WEATHERSTRIP, Front Door Window Belt Outer | | | | | | | |
| | 4 D., 4 D. Sub., C1 | | 2 | 1883 500 | 1883 500 | 1883 500 | 1883 500 | ---- --- |
| | C2, C3 | | 2 | ---- --- | ---- --- | ---- --- | 1954 775 | ---- --- |
| | 4 D. | Right | 1 | ---- --- | ---- --- | ---- --- | ---- --- | 2093 722 |
| | | Left | 1 | ---- --- | ---- --- | ---- --- | ---- --- | 2093 723 |
| | Sp. 4 D., Sp. 4 D. Sub. | Right | 1 | 1952 828 | 1952 828 | 1952 828 | 1952 828 | 1751 706 |
| | | Left | 1 | 1952 829 | 1952 829 | 1952 829 | 1952 829 | 1751 707 |
| | WEATHERSTRIP, Rear Door Window Belt Outer | | | | | | | |
| | 4 D., D1, D2, C1 | Right | 1 | 1954 680 | 1883 512 | 1883 512 | 1883 512 | 2094 500 |
| | | Left | 1 | 1954 681 | 1883 513 | 1883 513 | 1883 513 | 2094 501 |
| | 4 D., D3, D4, C2, C3 | Right | 1 | ---- --- | 1954 680 | ---- --- | 1954 776 | ---- --- |
| | | Left | 1 | ---- --- | 1954 681 | ---- --- | 1954 777 | ---- --- |


MyMopar.com

## 23-63-0 WEATHERSTRIP - Cont'd

| CODE | REMARKS | | PER CAR | PLYMOUTH | DODGE | DESOTO | CHRYSLER | IMPERIAL |
|---|---|---|---|---|---|---|---|---|
| 23-63-15 | WEATHERSTRIP - Cont'd | | | | | | | |
| | Sp. 4 D., D1, D2 | Right | 1 | 1954 694 | 1883 514 | 1883 514 | 1883 514 | 1751 724 |
| | | Left | 1 | 1954 695 | 1883 515 | 1883 515 | 1883 515 | 1751 725 |
| | Sp. 4 D., D3, D4 | Right | 1 | ---- --- | 1954 694 | ---- --- | ---- --- | ---- --- |
| | | Left | 1 | ---- --- | 1954 695 | ---- --- | ---- --- | ---- --- |
| | 4 D. Sub. | Right | 1 | 1883 512 | 1883 512 | ---- --- | ---- --- | ---- --- |
| | | Left | 1 | 1883 513 | 1883 513 | ---- --- | ---- --- | ---- --- |
| | Sp. 4 D. Sub. | Right | 1 | 1883 514 | 1883 514 | ---- --- | 1883 514 | ---- --- |
| | | Left | 1 | 1883 515 | 1883 515 | ---- --- | 1883 515 | ---- --- |
| | WEATHERSTRIP, Door Window Belt Outer | | | | | | | |
| | Sp. Cl. Cp., Cv. Cp. | Right | 1 | 1952 828 | 1952 828 | 1952 828 | 1952 828 | 1751 708 |
| | | Left | 1 | 1952 829 | 1952 829 | 1952 829 | 1952 829 | 1751 709 |
| | Cl. Sed., 2 D. Sub. | | 2 | 1952 850 | 1952 850 | ---- --- | ---- --- | ---- --- |
| 23-63-16 | CLIP, Door Window Belt Outer Weatherstrip | | | | | | | |
| | All | | ★ | 1775 089 | 1775 089 | ---- --- | 1775 089 | 6006 104 |
| 23-63-20 | WEATHERSTRIP, Quarter Window Belt Inner | | | | | | | |
| | Sp. Cl. Cp., C1, C2 | Right | 1 | 1909 458 | 1909 458 | 2161 350 | 2161 350 | ---- --- |
| | | Left | 1 | 1909 459 | 1909 459 | 2161 351 | 2161 351 | ---- --- |
| | Sp. Cl. Cp., Cv. Cp., C3 | | 2 | ---- --- | ---- --- | ---- --- | 2085 482 | 1772 798 |
| | Cv. Cp., C1 | | 2 | 1883 518 | 1883 518 | ---- --- | 1883 518 | ---- --- |
| | Cl. Sed., 2 D. Sub. | | 2 | 1909 456 | 1909 456 | ---- --- | ---- --- | ---- --- |
| 23-63-21 | WEATHERSTRIP, Quarter Window Belt Outer | | | | | | | |
| | Cv. Cp. | | 2 | 1954 712 | 1954 712 | 2093 546 | 2093 546 | ---- --- |
| | Cv. Cp. | Right | 1 | ---- --- | ---- --- | ---- --- | ---- --- | 2094 648 |
| | | Left | 1 | ---- --- | ---- --- | ---- --- | ---- --- | 2094 649 |
| | Sp. Cl. Cp. | Right | 1 | 2093 546 | 2093 546 | 2093 546 | 2093 546 | 2094 648 |
| | | Left | 1 | 2093 547 | 2093 547 | 2093 547 | 2093 547 | 2094 649 |
| | 2 D. Sub. | | 2 | 1954 724 | ---- --- | ---- --- | ---- --- | ---- --- |
| | Cl. Sed. | | 2 | 1909 456 | 1909 456 | ---- --- | ---- --- | ---- --- |
| 23-63-22 | CLIP, Quarter Window Belt Weatherstrip | | | | | | | |
| | Sp. Cl. Cp., Cv. Cp., Cl. Sed., 2 D. Sub. | Outer | ★ | 1775 089 | 1775 089 | 1775 089 | 1775 089 | 6006 104 |
| | Cl. Sed., 2 D. Sub. | Inner | 12 | 6000 804 | 6000 804 | ---- --- | ---- --- | ---- --- |
| 23-63-33 | WEATHERSTRIP, Door | | | | | | | |
| | 4 D. | Front Right | 1 | 1883 504 | 1883 504 | 1883 504 | 1883 504 | 2093 866 |
| | | Left | 1 | 1883 504 | 1883 504 | 1883 504 | 1883 504 | 2093 867 |
| | 4 D., D1, D2 | Rear Right | 1 | 1954 826 | 1883 520 | 1883 520 | 1883 520 | 2093 246 |
| | | Left | 1 | 1954 826 | 1883 520 | 1883 520 | 1883 520 | 2093 247 |
| | 4 D., D3, D4 | Rear Right | 1 | ---- --- | 1954 826 | ---- --- | ---- --- | ---- --- |
| | | Left | 1 | ---- --- | 1954 826 | ---- --- | ---- --- | ---- --- |
| | 4 D. | Bottom, Front Right | 1 | ---- --- | ---- --- | ---- --- | ---- --- | 1751 742 |
| | | Left | 1 | ---- --- | ---- --- | ---- --- | ---- --- | 1751 743 |
| | | Bottom, Rear Right | 1 | ---- --- | ---- --- | ---- --- | ---- --- | 1751 774 |
| | | Left | 1 | ---- --- | ---- --- | ---- --- | ---- --- | 1751 775 |
| | Sp. 4 D. | Front Right | 1 | 2165 304 | 2165 304 | 2165 304 | 2165 304 | ---- --- |
| | | Left | 1 | 2165 305 | 2165 305 | 2165 305 | 2165 305 | ---- --- |
| | Sp. 4 D., D1, D2 | Rear Right | 1 | 2165 486 | 2165 488 | 2165 488 | 2165 488 | ---- --- |
| | | Left | 1 | 2165 487 | 2165 489 | 2165 489 | 2165 489 | ---- --- |
| | Sp. 4 D., D3, D4 | Rear Right | 1 | ---- --- | 2165 486 | ---- --- | ---- --- | ---- --- |
| | | Left | 1 | ---- --- | 2165 487 | ---- --- | ---- --- | ---- --- |
| | Sp. 4 D. | Hinge Pillar, Front Right | 1 | ---- --- | ---- --- | ---- --- | ---- --- | 1810 704 |
| | | Left | 1 | ---- --- | ---- --- | ---- --- | ---- --- | 1810 705 |
| | | Lock Pillar, Front Right | 1 | ---- --- | ---- --- | ---- --- | ---- --- | 1751 620 |
| | | Left | 1 | ---- --- | ---- --- | ---- --- | ---- --- | 1751 621 |
| | | Bottom, Front Right | 1 | ---- --- | ---- --- | ---- --- | ---- --- | 1751 742 |
| | | Left | 1 | ---- --- | ---- --- | ---- --- | ---- --- | 1751 743 |
| | | Hinge Pillar, Rear Right | 1 | ---- --- | ---- --- | ---- --- | ---- --- | 1751 618 |
| | | Left | 1 | ---- --- | ---- --- | ---- --- | ---- --- | 1751 619 |
| | | Lock Pillar, on Door, Rear Right | 1 | ---- --- | ---- --- | ---- --- | ---- --- | 1751 654 |
| | | Left | 1 | ---- --- | ---- --- | ---- --- | ---- --- | 1751 655 |
| | | Bottom, Rear Right | 1 | ---- --- | ---- --- | ---- --- | ---- --- | 1751 774 |
| | | Left | 1 | ---- --- | ---- --- | ---- --- | ---- --- | 1751 775 |
| | Lock Pillar to Lock Pillar Angle | | 2 | ---- --- | ---- --- | ---- --- | ---- --- | *1690 874 |
| | Sp. Cl. Cp. | Hinge Pillar, Right | 1 | ---- --- | ---- --- | ---- --- | ---- --- | 1810 704 |
| | | Left | 1 | ---- --- | ---- --- | ---- --- | ---- --- | 1810 705 |



MyMopar.com

## 23-63-0 WEATHERSTRIP Cont'd

| CODE | REMARKS | | PER CAR | PLYMOUTH | DODGE | DESOTO | CHRYSLER | IMPERIAL |
|---|---|---|---|---|---|---|---|---|
| 23-63-33 | WEATHERSTRIP - Cont'd | | | | | | | |
| | Sp. Cl. Cp., Cv. Cp. | Right | 1 | 1952 852 | 1952 852 | 1952 852 | 1952 852 | ---- --- |
| | | Left | 1 | 1952 853 | 1952 853 | 1952 853 | 1952 853 | ---- --- |
| | | Bottom, Right | 1 | ---- --- | ---- --- | ---- --- | ---- --- | 1751 744 |
| | | Left | 1 | ---- --- | ---- --- | ---- --- | ---- --- | 1751 745 |
| | | Lock Pillar, Front Right | 1 | ---- --- | ---- --- | ---- --- | ---- --- | 1751 646 |
| | | Left | 1 | ---- --- | ---- --- | ---- --- | ---- --- | 1751 647 |
| | Cv. Cp. | Hinge Pillar, Right | 1 | ---- --- | ---- --- | ---- --- | ---- --- | 1810 706 |
| | | Left | 1 | ---- --- | ---- --- | ---- --- | ---- --- | 1810 707 |
| | Cl. Sed., 2 D. Sub. | | 2 | 1954 828 | 1954 828 | ---- --- | ---- --- | ---- --- |
| | 4 D. Sub. | Front | 2 | 1883 504 | 1883 504 | ---- --- | ---- --- | ---- --- |
| | | Rear | 2 | 1883 520 | 1883 520 | ---- --- | ---- --- | ---- --- |
| | Sp. 4 D., Sub. | Front Right | 1 | 2165 304 | 2165 304 | ---- --- | 2165 304 | ---- --- |
| | | Left | 1 | 2165 305 | 2165 305 | ---- --- | 2165 305 | ---- --- |
| | | Rear Right | 1 | 2165 488 | 2165 488 | ---- --- | 2165 488 | ---- --- |
| | | Left | 1 | 2165 489 | 2165 489 | ---- --- | 2165 489 | ---- --- |
| | WEATHERSTRIP, Door Hinge Pillar Auxiliary | | | | | | | |
| | | Right | 1 | ---- --- | ---- --- | ---- --- | ---- --- | 1751 570 |
| | | Left | 1 | ---- --- | ---- --- | ---- --- | ---- --- | 1751 571 |
| | WEATHERSTRIP, Roof Side Rail | | | | | | | |
| | Sp. 4 D., Sp. 4 D. Sub. | Right | 1 | 2094 484 | 2094 484 | 2094 484 | 2094 484 | 2093 628 |
| | | Left | 1 | 2094 485 | 2094 485 | 2094 485 | 2094 485 | 2093 629 |
| | Sp. Cl. Cp. | Right | 1 | 2094 484 | 2094 484 | 2094 484 | 2094 484 | 2093 630 |
| | | Left | 1 | 2094 485 | 2094 485 | 2094 485 | 2094 485 | 2093 631 |
| | WEATHERSTRIP, Roof Rail Door Header Rear | | | | | | | |
| | Sp. 4 D. | Right | 1 | ---- --- | ---- --- | ---- --- | ---- --- | 2094 870 |
| | | Left | 1 | ---- --- | ---- --- | ---- --- | ---- --- | 2094 871 |
| | WEATHERSTIP, Rear Door Upper Hinge Side | | | | | | | |
| | Sp. 4 D., Sp. 4 D. Sub. | Right | 1 | 2165 484 | 2165 484 | 2165 484 | 2165 484 | ---- --- |
| | | Left | 1 | 2165 485 | 2165 485 | 2165 485 | 2165 485 | ---- --- |
| | SEAL, Door Vent Wing Frame Front Corner | | | | | | | |
| | Cv. Cp. | Upper, Right | 1 | 1954 718 | 1954 718 | ---- --- | 1954 718 | ---- --- |
| | | Left | 1 | 1954 719 | 1954 719 | ---- --- | 1954 719 | ---- --- |
| | WEATHERSEAL, Body Lock Pillar Belt to Door | | | | | | | |
| | Sp. Cl. Cp., Cv. Cp. | Right | 1 | 1954 618 | 1954 618 | 1954 618 | 1954 618 | ---- --- |
| | | Left | 1 | 1954 619 | 1954 619 | 1954 619 | 1954 619 | ---- --- |
| 23-63-37 | SEAL, Roof Rail Weatherstrip Retainer to Roof Rail | | | | | | | |
| | Sp. 4 D. | | 2 | ---- --- | ---- --- | ---- --- | ---- --- | 2094 581 |
| 23-63-55 | RETAINER, Roof Side Rail Weatherstrip | | | | | | | |
| | Sp. 4 D., D3, D4 | Right | 1 | 1883 290 | 1883 290 | ---- --- | ---- --- | 2093 714 |
| | | Left | 1 | 1883 291 | 1883 291 | ---- --- | ---- --- | 2093 715 |
| | Sp. 4 D., Sp. 4 D. Sub., D1, D2 | Pkg., Right | 1 | ---- --- | 2196 671 | 2196 671 | 2196 671 | ---- --- |
| | | Left | 1 | ---- --- | 2196 672 | 2196 672 | 2196 672 | ---- --- |
| | SCREW | | 32 | ---- --- | 125 978 | 125 978 | 125 978 | ---- --- |
| | Sp. Cl. Cp. | Right | 1 | 1883 294 | 1883 294 | ---- --- | ---- --- | 2093 366 |
| | | Left | 1 | 1883 295 | 1883 295 | ---- --- | ---- --- | 2093 367 |
| | Sp. Cl. Cp. | Pkg., Right | 1 | ---- --- | ---- --- | 2196 669 | 2196 669 | ---- --- |
| | | Left | 1 | ---- --- | ---- --- | 2196 670 | 2196 670 | ---- --- |
| | SCREW | | 24 | ---- --- | ---- --- | 125 978 | 125 978 | ---- --- |
| 23-63-56 | EXTENSION, Roof Side Rail Rear Weatherstrip Retainer | | | | | | | |
| | Sp. Cl. Cp. | Right | 1 | 1954 864 | 1954 864 | ---- --- | ---- --- | ---- --- |
| | | Left | 1 | 1954 865 | 1954 865 | ---- --- | ---- --- | ---- --- |
| 23-63-94 | WEATHERSTRIP, Rear Door Window Front Frame | | | | | | | |
| | Sp. 4 D., Sp. 4 D. Sub. | Right | 1 | 1954 544 | 1954 544 | 1954 544 | 1954 544 | 1810 016 |
| | | Left | 1 | 1954 545 | 1954 545 | 1954 545 | 1954 545 | 1810 017 |
| 23-63-97 | WEATHERSTRIP, Door Window Glass Lower Channel | | | | | | | |
| | Sp. 4 D. | Front | 2 | ---- --- | ---- --- | ---- --- | ---- --- | 1750 517 |
| 23-63-100 | WEATHERSTRIP, Quarter Window | | | | | | | |
| | Sub. | Right | 1 | 2093 200 | 2093 200 | ---- --- | 2093 200 | ---- --- |
| | | Left | 1 | 2093 201 | 2093 201 | ---- --- | 2093 201 | ---- --- |



MyMopar.com

| CODE | REMARKS | | PER CAR | PLYMOUTH | DODGE | DESOTO | CHRYSLER | IMPERIAL |
|---|---|---|---|---|---|---|---|---|
| **23-63-0 WEATHERSTRIP - Cont'd** | | | | | | | | |
| 23-63-104 | WEATHERSTRIP, Quarter Window Glass Front Frame | | | | | | | |
| | Sp. Cl. Cp., Cv. Cp. | Right | 1 | 1954 544 | 1954 544 | 1954 544 | 1954 544 | 1751 610 |
| | | Left | 1 | 1954 545 | 1954 545 | 1954 545 | 1954 545 | 1751 611 |
| 23-63-112 | WEATHERSTRIP, Rear Window Glass | | | | | | | |
| | 4 D., Cl. Sed., D3, D4 | w/Low Window | 1 | 1884 848 | 1884 848 | 1963 684 | 1963 684 | ---- --- |
| | 4 D., D1, D2 | w/Low Window | 1 | ---- --- | 2165 468 | ---- --- | ---- --- | ---- --- |
| | 4 D., S3 | w/High Window | 1 | ---- --- | ---- --- | 1952 661 | 1952 661 | ---- --- |
| | Sp. 4 D., D1, S1, C1, C2 | w/Low Window | 1 | ---- --- | 1963 684 | 1963 684 | 1963 684 | ---- --- |
| | Sp. 4 D., D4 | w/Low Window | 1 | ---- --- | 1884 848 | ---- --- | ---- --- | ---- --- |
| | Sp. 4 D., D1, D2 | w/High Window | 1 | 1964 604 | 1952 661 | 1952 661 | 1952 661 | ---- --- |
| | D3, D4 | w/High Window | 1 | ---- --- | 1952 717 | ---- --- | ---- --- | ---- --- |
| | Sp. 4 D., Y1L, Y1M | | 1 | ---- --- | ---- --- | ---- --- | ---- --- | 2093 398 |
| | Y1H | | 1 | ---- --- | ---- --- | ---- --- | ---- --- | 1961 509 |
| | Sp. Cl. Cp., D1, D3, D4 | w/Low Window | 1 | 1964 603 | 1963 750 | ---- --- | ---- --- | ---- --- |
| | Sp. Cl. Cp., D3, D4 | w/High Window | 1 | 1964 602 | 1884 847 | ---- --- | ---- --- | ---- --- |
| | D1, D2 | w/High Window | 1 | ---- --- | 1952 688 | ---- --- | ---- --- | ---- --- |
| | Sp. Cl. Cp. | | 1 | ---- --- | ---- --- | 2093 652 | 2093 652 | 2093 399 |
| 23-63-126 | WEATHERSTRIP, Door Vent Wing | | | | | | | |
| | 4 D., Cl. Sed., Sub. | Right | 1 | 1950 594 | 1950 594 | 1950 594 | 1950 594 | 2094 330 |
| | | Left | 1 | 1950 595 | 1950 595 | 1950 595 | 1950 595 | 2094 331 |
| | Sp. 4 D., Sp. Cl. Cp., Cv. Cp., Sp. 4 D. Sub. | | | | | | | |
| | | Right | 1 | 1950 592 | 1950 592 | 1950 592 | 1950 592 | 2094 334 |
| | | Left | 1 | 1950 593 | 1950 593 | 1950 593 | 1950 593 | 2094 335 |
| 23-63-127 | RETAINER and DIVISION CHANNEL, Door Vent Wing | | | | | | | |
| | 4 D., Cl. Sed., 4 D. Sub., 2 D. Sub. | Right | 1 | 1950 478 | 1950 478 | 1950 478 | 1950 478 | 1877 554 |
| | | Left | 1 | 1950 479 | 1950 479 | 1950 479 | 1950 479 | 1877 555 |
| | 4 D. | w/Power Vent Windows, Right | 1 | ---- --- | ---- --- | ---- --- | ---- --- | 1961 868 |
| | | Left | 1 | ---- --- | ---- --- | ---- --- | ---- --- | 1961 869 |
| NOTE: | Also see 23-64-48. | | | | | | | |
| 23-63-131 | CLIP, Door Weatherstrip | | 2 | ---- --- | ---- --- | ---- --- | ---- --- | *1643 721 |
| 23-63-171 | WEATHERSTRIP, Tailgate Opening | | | | | | | |
| | Sub. | | 1 | 2093 056 | 2093 056 | ---- --- | 2093 056 | ---- --- |
| 23-63-172 | WEATHERSTRIP, Deck Lid Opening | | | | | | | |
| | Except Sub., D3, D4 | | 1 | 2093 086 | 1963 076 | 2093 645 | 2093 645 | 2093 086 |
| | D1, D2 | | 1 | ---- --- | 1954 788 | ---- --- | ---- --- | ---- --- |
| 23-63-173 | RETAINER, Deck Lid Opening Weatherstrip | | | | | | | |
| | Except Sub. | Lower | 1 | 1909 669 | ---- --- | ---- --- | ---- --- | ---- --- |
| 23-63-181 | WEATHERSTRIP, Tailgate Window Belt | | | | | | | |
| | Sub. | On Tailgate, Inner | 1 | 1878 650 | 1878 650 | ---- --- | 1878 650 | ---- --- |
| | | On Lower Channel, Outer | 1 | 1878 204 | 1878 204 | ---- --- | 1878 204 | ---- --- |
| **23-64-0 WINDOWS AND VENT WING** | | | | | | | | |
| | NOTE 1: PLACE ORDERS WITH YOUR USUAL SOURCE OF SUPPLY FOR MOPAR PARTS. | | | | | | | |
| | NOTE 2: PLACE ORDERS DIRECT WITH PITTSBURGH PLATE GLASS COMPANY. | | | | | | | |
| 23-64-4 | BUMPER, Door Window Down Position Stop | | | | | | | |
| | | Front | 2 | 1954 083 | 1954 083 | 1954 083 | 1954 083 | 1381 435 |
| | | Rear | 2 | 1954 083 | 1954 083 | 1954 083 | 1954 083 | 1381 435 |
| | BUMPER, Quarter Window Down Position Stop | | | | | | | |
| | Sp. Cl. Cp., Cv. Cp., Cl. Sed. | | 2 | 1954 083 | 1954 083 | 1954 083 | 1954 083 | 1381 435 |
| 23-64-10 | GLASS, Frame and Lower Channel, Tailgate Window (see Note 1) | | | | | | | |
| | Sub. | | 1 | 1960 516 | 1960 516 | ---- --- | 1960 516 | ---- --- |
| | | Solex | 1 | 1960 601 | 1960 601 | ---- --- | 1960 601 | ---- --- |


MyMopar.com

| CODE | REMARKS | PER CAR | PLYMOUTH | DODGE | DESOTO | CHRYSLER | IMPERIAL |
|---|---|---|---|---|---|---|---|
| **23-64-0** | **WINDOWS AND VENT WING - Cont'd** | | | | | | |
| 23-64-12 | SUPPORT, Rear Door Window Glass Channel Down Position Stop Bracket | | | | | | |
| | Sp. 4 D., Sp. 4 D. Sub. w/Electric Window Lifts | 2 | 1963 392 | 1963 392 | 1963 392 | 1963 392 | ---- --- |
| | BRACKET, Door Window Glass Channel Down Position Stop | | | | | | |
| | 4 D., Sp. 4 D., 4 D. Sub., Sp. 4 D. Sub. w/Electric Window Lifts | 4 | 1963 393 | 1963 393 | 1963 393 | 1963 393 | ---- --- |
| | BRACKET, Door and Quarter Window Glass Channel Down Position Stop | | | | | | |
| | Sp. Cl. Cp., Cv. Cp., Cl. Sed. w/Electric Window Lifts | 4 | 1963 393 | 1963 393 | 1963 393 | 1963 393 | ---- --- |
| | BRACKET, Door Glass Down Position Stop | 2 | ---- --- | ---- --- | ---- --- | ---- --- | *1475 487 |
| | BRACKET, Rear Door Window Down Position Stop | | | | | | |
| | Sp. 4 D. | 2 | ---- --- | ---- --- | ---- --- | ---- --- | 1750 606 |
| | BRACKET, Quarter Window Down Position Stop | | | | | | |
| | Sp. Cl. Cp., Cv. Cp. | 2 | ---- --- | ---- --- | ---- --- | ---- --- | 1750 806 |
| | SUPPORT, Quarter Window Down Position Stop | | | | | | |
| | Sp. Cl. Cp., Cv. Cp. | 2 | ---- --- | ---- --- | ---- --- | ---- --- | 1750 537 |
| | STOP, Front Door Window Up Position, on Door | | | | | | |
| | Sp. 4 D., Sp. 4 D. Sub., Sp. Cl. Cp., Cv. Cp. | 4 | 1909 529 | 1909 529 | 1909 529 | 1909 529 | ---- --- |
| | Sp. 4 D., Sp. Cl. Cp., Cv. Cp. | 4 | ---- --- | ---- --- | ---- --- | ---- --- | 1750 609 |
| | STOP, Rear Door Window Up Position, on Rear Track | | | | | | |
| | Sp. 4 D. Right | 1 | ---- --- | ---- --- | ---- --- | ---- --- | 1751 692 |
| | Left | 1 | ---- --- | ---- --- | ---- --- | ---- --- | 1751 693 |
| | STOP, Rear Door Window Up Position, on Door | | | | | | |
| | Sp. 4 D., Sp. 4 D. Sub. Front | 2 | 1909 529 | 1909 529 | 1909 529 | 1909 529 | ---- --- |
| | Rear | 2 | 1909 530 | 1909 530 | 1909 530 | 1909 530 | ---- --- |
| | Upper Front, Right | 1 | ---- --- | ---- --- | ---- --- | ---- --- | 1751 698 |
| | Left | 1 | ---- --- | ---- --- | ---- --- | ---- --- | 1751 699 |
| | STOP, Quarter Window Up Position, on Door | | | | | | |
| | Sp. Cl. Cp. Rear | 2 | 1909 530 | 1909 530 | 1909 530 | 1909 530 | ---- --- |
| | SUPPORT, Quarter Window Up Position Stop Bumper, on Glass Lower Channel | | | | | | |
| | Sp. Cl. Cp., Cv. Cp. Front Right | 1 | ---- --- | ---- --- | ---- --- | ---- --- | 1750 658 |
| | Left | 1 | ---- --- | ---- --- | ---- --- | ---- --- | 1750 659 |
| | Cv. Cp. Rear Right | 1 | ---- --- | ---- --- | ---- --- | ---- --- | 1691 104 |
| | Left | 1 | ---- --- | ---- --- | ---- --- | ---- --- | 1691 105 |
| | STOP, Quarter Window Up Position, on Quarter Inside Panel | | | | | | |
| | Sp. Cl. Cp. | 2 | 1963 222 | 1963 222 | 1963 222 | 1963 222 | ---- --- |
| 23-64-13 | SCREW and WASHER, Door Window Stop to Door Panel | 4 | ---- --- | ---- --- | ---- --- | ---- --- | *6006 082 |
| | CLIP and BOLT, Rear Door Window Up Position Stop to Track | | | | | | |
| | Sp. 4 D. | 2 | ---- --- | ---- --- | ---- --- | ---- --- | 6006 130 |
| 23-64-34 | RIVET, Quarter Window Frame to Weatherstrip Retainer | | | | | | |
| | Sp. Cl. Cp., Cv. Cp. | ★ | ---- --- | ---- --- | ---- --- | ---- --- | 6000 143 |
| 23-64-41 | STUD, Front Door Vent Wing Adjusting | ★ | *1950 830 | *1950 830 | *1950 830 | *1950 830 | *6006 408 |
| 23-64-44 | STUD, Door Vent Wing Divisional Channel Lower Bracket Adjusting | | | | | | |
| | 4 D. | 2 | ---- --- | ---- --- | ---- --- | ---- --- | ⊟6022 001 |
| 23-64-47 | CAP, Door Vent Wing Frame Lower Corner | | | | | | |
| | Sp. 4 D., Sp. Cl. Cp., Cv. Cp., Sp. 4 D. Sub. PKG., Right | 1 | *2166 618 | *2166 618 | *2166 616 | *2166 616 | ---- --- |
| | Left | 1 | 2166 619 | 2166 619 | 2166 617 | 2166 617 | ---- --- |
| | NUT | 2 | ⊟6022 075 | ⊟6022 075 | ⊟6022 075 | ⊟6022 075 | ---- --- |



MyMopar.com

## 23-64-0 WINDOWS AND VENT WING - Cont'd

| CODE | REMARKS | PER CAR | PLYMOUTH | DODGE | DESOTO | CHRYSLER | IMPERIAL |
|---|---|---|---|---|---|---|---|
| 23-64-48 | FRAME and DIVISION CHANNEL, Door Vent Wing | | | | | | |
| | Sp. 4 D., Sp. Cl. Cp., Cv. Cp., Sp. 4 D. Sub. Right | 1 | 1952 348 | 1952 348 | 1952 348 | 1952 348 | ---- --- |
| | Left | 1 | 1952 349 | 1952 349 | 1952 349 | 1952 349 | ---- --- |
| | Sp. 4 D., Sp. Cl. Cp., Cv. Cp. w/Power Vent, Right | 1 | ---- --- | ---- --- | ---- --- | ---- --- | 2093 942 |
| | Left | 1 | ---- --- | ---- --- | ---- --- | ---- --- | 2093 943 |
| | w/o Power Vent, Right | 1 | ---- --- | ---- --- | ---- --- | ---- --- | 1960 948 |
| | Left | 1 | ---- --- | ---- --- | ---- --- | ---- --- | 1960 949 |
| 23-64-60 | RIVET, Door Vent Wing except 4 D., Cl. Sed., 2 D. Sub. | 2 | 1578 269 | 1578 269 | 1578 269 | 1578 269 | ---- --- |
| 23-64-66 | FRAME, Rear Window Opening Upper | | | | | | |
| | 4 D., D3H, D4H w/High Window | 1 | ---- --- | 1963 228 | 1963 229 | 1963 229 | ---- --- |
| | 4 D., D3, D4 w/Low Window | 1 | 1909 320 | 1909 320 | 1909 322 | 1909 322 | ---- --- |
| | D1, D2 w/Low Window | 1 | ---- --- | 1909 322 | ---- --- | ---- --- | ---- --- |
| | Sp. 4 D., D3H, D4H, S3 w/High Window | 1 | 1963 228 | 1963 228 | 1963 229 | 1963 229 | ---- --- |
| | Sp. 4 D., D1, D2 w/High Window | 1 | ---- --- | 1963 229 | ---- --- | ---- --- | ---- --- |
| | Sp. 4 D., D3M, D4M w/Low Window | 1 | 1909 320 | 1909 320 | ---- --- | ---- --- | ---- --- |
| | Sp. 4 D., D1, S1, C1, C2 w/Low Window | 1 | ---- --- | 1909 322 | 1909 322 | 1909 322 | ---- --- |
| | Sp. Cl. Cp. w/High Window | 1 | 1963 306 | 1963 306 | ---- --- | ---- --- | ---- --- |
| | Sp. Cl. Cp., P1M, P2M, D3M, D4M, D1 w/Low Window | 1 | 1909 321 | 1909 321 | ---- --- | ---- --- | ---- --- |
| | Cl. Sed. | 1 | 1909 320 | 1909 320 | ---- --- | ---- --- | ---- --- |
| | Sp. Cl. Cp. w/High Window | 1 | ---- --- | ---- --- | 1909 323 | 1909 323 | ---- --- |
| | 4 D., Sp. 4 D. | 1 | ---- --- | ---- --- | ---- --- | ---- --- | *1877 358 |
| | Sp. Cl. Cp. | 1 | ---- --- | ---- --- | ---- --- | ---- --- | *1877 359 |
| | FRAME, Rear Window Opening Side | | | | | | |
| | 4 D., D1, D2, S1 w/Low Window, Right | 1 | 1869 892 | 1882 020 | 1882 020 | 1882 020 | ---- --- |
| | Left | 1 | 1869 893 | 1882 021 | 1882 021 | 1882 021 | ---- --- |
| | D3, D4 w/Low Window, Right | 1 | ---- --- | 1869 892 | ---- --- | ---- --- | ---- --- |
| | Left | 1 | ---- --- | 1869 893 | ---- --- | ---- --- | ---- --- |
| | 4 D., S3 w/High Window, Right | 1 | ---- --- | ---- --- | 1952 878 | 1952 878 | ---- --- |
| | Left | 1 | ---- --- | ---- --- | 1952 879 | 1952 879 | ---- --- |
| | 4 D. Right | 1 | ---- --- | ---- --- | ---- --- | ---- --- | 1877 360 |
| | Left | 1 | ---- --- | ---- --- | ---- --- | ---- --- | 1877 361 |
| | Sp. 4 D., D1, S1, C1, C2 w/Low Window, Right | 1 | ---- --- | 1882 020 | 1882 020 | 1882 020 | ---- --- |
| | Left | 1 | ---- --- | 1882 021 | 1882 021 | 1882 021 | ---- --- |
| | Sp. 4 D., D1, D2 w/High Window, Right | 1 | 1952 876 | 1952 878 | 1952 878 | 1952 878 | ---- --- |
| | Left | 1 | 1952 877 | 1952 879 | 1952 879 | 1952 879 | ---- --- |
| | D3, D4 w/High Window, Right | 1 | ---- --- | 1952 876 | ---- --- | ---- --- | ---- --- |
| | Left | 1 | ---- --- | 1952 877 | ---- --- | ---- --- | ---- --- |
| | Sp. 4 D. Right | 1 | ---- --- | ---- --- | ---- --- | ---- --- | 1877 360 |
| | Left | 1 | ---- --- | ---- --- | ---- --- | ---- --- | 1877 361 |
| | Sp. Cl. Cp. Right | 1 | ---- --- | ---- --- | 1861 142 | 1861 142 | 1877 362 |
| | Left | 1 | ---- --- | ---- --- | 1861 143 | 1861 143 | 1877 363 |
| | Cl. Sed. w/Low Window, Right | 1 | 1869 892 | 1869 892 | ---- --- | ---- --- | ---- --- |
| | Left | 1 | 1869 893 | 1869 893 | ---- --- | ---- --- | ---- --- |
| | FRAME, Rear Window Opening Lower End | | | | | | |
| | 4 D., Sp. 4 D., D1, D2 Right | 1 | ---- --- | 1954 668 | 1954 668 | 1954 668 | ---- --- |
| | Left | 1 | ---- --- | 1954 669 | 1954 669 | 1954 669 | ---- --- |
| 23-64-67 | REINFORCEMENT, Rear Window Opening Upper Frame | | | | | | |
| | 4 D., Sp. 4 D. Right | 1 | ---- --- | ---- --- | ---- --- | ---- --- | *1877 364 |
| | Left | 1 | ---- --- | ---- --- | ---- --- | ---- --- | *1877 365 |
| | Sp. Cl. Cp. Right | 1 | ---- --- | ---- --- | ---- --- | ---- --- | *1877 390 |
| | Left | 1 | ---- --- | ---- --- | ---- --- | ---- --- | *1877 391 |
| 23-64-68 | EXTENSION, Rear Window Opening Frame | | | | | | |
| | Sp. Cl. Cp., P1M, P2M, D1, D3M, D4M Upper Right | 1 | 1884 562 | 1884 562 | ---- --- | ---- --- | ---- --- |
| | Left | 1 | 1884 563 | 1884 563 | ---- --- | ---- --- | ---- --- |
| | Sp. Cl. Cp. w/High Window, Upper Right | 1 | 1952 686 | 1952 686 | ---- --- | ---- --- | ---- --- |
| | Left | 1 | 1952 687 | 1952 687 | ---- --- | ---- --- | ---- --- |
| | Sp. Cl. Cp. Lower Right | 1 | 1909 608 | 1909 608 | ---- --- | ---- --- | ---- --- |
| | Left | 1 | 1909 609 | 1909 609 | ---- --- | ---- --- | ---- --- |



MyMopar.com

## 23-64-0 WINDOWS AND VENT WING - Cont'd

| CODE | REMARKS | PER CAR | PLYMOUTH | DODGE | DESOTO | CHRYSLER | IMPERIAL |
|---|---|---|---|---|---|---|---|
| 23-64-69 | PLUG, Rear Window Upper Frame to Wheelhouse; Sp. Cl. Cp. | 2 | 2165 024 | 2165 024 | ---- --- | ---- --- | ---- --- |
| 23-64-70 | GUSSET, Rear Window Upper Frame to Wheelhouse | | | | | | |
| | Sp. Cl. Cp., P1H, P2H, D3, D4 w/High Window, Right | 1 | 1952 678 | 1952 678 | ---- --- | ---- --- | ---- --- |
| | Left | 1 | 1952 679 | 1952 679 | ---- --- | ---- --- | ---- --- |
| | Sp. Cl. Cp., D1, D2 w/High Window, Right | 1 | ---- --- | 1954 496 | ---- --- | ---- --- | ---- --- |
| | Left | 1 | ---- --- | 1954 497 | ---- --- | ---- --- | ---- --- |
| | Sp. Cl. Cp., D1 w/Low Window, Right | 1 | ---- --- | 1884 612 | ---- --- | ---- --- | ---- --- |
| | Left | 1 | ---- --- | 1884 613 | ---- --- | ---- --- | ---- --- |
| | Sp. Cl. Cp., P1M, P2M, D3M, D4M w/Low Window, Right | 1 | 1884 610 | 1884 610 | ---- --- | ---- --- | ---- --- |
| | Left | 1 | 1884 611 | 1884 611 | ---- --- | ---- --- | ---- --- |
| 23-64-71 | BUMPER or PLUG, Door Glass Upper Corner, on Division Channel | | | | | | |
| | Sp. 4 D., Sp. Cl. Cp., Cv. Cp., Sp. 4 D. Sub. Right | 1 | 1964 228 | 1964 228 | 1964 228 | 1964 228 | 2093 809 |
| | Left | 1 | 1964 229 | 1964 229 | 1964 229 | 1964 229 | 2093 809 |
| 23-64-74 | SEAL, Door Vent Wing to Door Inner Panel | | | | | | |
| | Sp. 4 D., Sp. 4 D. Sub., Sp. Cl. Cp., Cv. Cp. | 2 | 2165 519 | 2161 519 | 2161 519 | 2161 519 | ---- --- |
| 23-64-75 | MOTOR and TRANSMISSION, Electric Vent Wing Right | 1 | ---- --- | ---- --- | ---- --- | ---- --- | 2093 030 |
| | Left | 1 | ---- --- | ---- --- | ---- --- | ---- --- | 2093 031 |
| 23-64-76 | BRACKET, Electric Vent Wing Motor Mounting Right | 1 | ---- --- | ---- --- | ---- --- | ---- --- | 1961 802 |
| | Left | 1 | ---- --- | ---- --- | ---- --- | ---- --- | 1961 803 |
| 23-64-78 | DRIVE SHAFT, Gear and Retainer, Electric Vent Wing Right | 1 | ---- --- | ---- --- | ---- --- | ---- --- | 2093 048 |
| | Left | 1 | ---- --- | ---- --- | ---- --- | ---- --- | 2093 049 |
| 23-64-79 | COUPLING, Electric Vent Wing Shaft to Pivot | 2 | ---- --- | ---- --- | ---- --- | ---- --- | 1961 977 |
| 23-64-83 | SHIM, Electric Vent Wing Motor Mounting Bracket to Door | 2 | ---- --- | ---- --- | ---- --- | ---- --- | B6006 512 |
| 23-64-174 | GLASS, Frame and Lower Channel, Quarter Window (see Note 1) | | | | | | |
| | Sp. Cl. Cp. Right | 1 | 1909 430 | 1909 430 | 1961 782 | 1961 782 | ---- --- |
| | Left | 1 | 1909 431 | 1909 431 | 1961 783 | 1961 783 | ---- --- |
| | Solex, Right | 1 | 1909 432 | 1909 432 | 1961 784 | 1961 784 | ---- --- |
| | Left | 1 | 1909 433 | 1909 433 | 1961 785 | 1961 785 | ---- --- |
| | Cv. Cp. Right | 1 | 1909 682 | 1909 682 | ---- --- | 1909 688 | ---- --- |
| | Left | 1 | 1909 683 | 1909 683 | ---- --- | 1909 689 | ---- --- |
| | Solex, Right | 1 | 1909 684 | 1909 684 | ---- --- | 1909 690 | ---- --- |
| | Left | 1 | 1909 685 | 1909 685 | ---- --- | 1909 691 | ---- --- |
| 23-64-197 | GUIDE, Quarter Window Glass Lower Frame Stabilizer | | | | | | |
| | Sp. Cl. Cp. | 4 | ---- --- | ---- --- | 1961 681 | 1961 681 | ---- --- |
| 23-64-198 | CHANNEL, Quarter Window Glass Lower Frame Stabilizer | | | | | | |
| | Sp. Cl. Cp. Right | 1 | ---- --- | ---- --- | 1961 822 | 1961 822 | ---- --- |
| | Left | 1 | ---- --- | ---- --- | 1961 823 | 1961 823 | ---- --- |
| 23-64-237 | CLAMP, Door Vent Wing Upper Pivot to Glass | 2 | *1708 998 | *1708 998 | *1708 998 | *1708 998 | ---- --- |
| | PLATE, Door Vent Wing Upper Pivot to Glass Base Anchor | 2 | ---- --- | ---- --- | ---- --- | ---- --- | *1755 366 |
| 23-64-240 | PIVOT, Front Door Vent Wing Upper 4 D., 4 D. Sub., 2 D. Sub., Cl. Sed Right | 1 | 1950 356 | 1950 356 | 1950 356 | 1950 356 | 1960 036 |
| | Left | 1 | 1950 357 | 1950 357 | 1950 357 | 1950 357 | 1960 037 |
| 23-64-242 | CLAMP, Door Vent Wing Lower Pivot Tension Right | 1 | 1776 504 | 1776 504 | 1776 504 | 1776 504 | ---- --- |
| | Left | 1 | 1776 505 | 1776 505 | 1776 505 | 1776 505 | ---- --- |
| | BRACKET, Door Vent Wing Upper Pivot Sp. 4D., Sp. Cl. Cp., Cv. Cp. Right | 1 | 1950 292 | 1950 292 | 1950 292 | 1950 292 | 1690 952 |
| | Left | 1 | 1950 293 | 1950 293 | 1950 293 | 1950 293 | 1690 953 |
| | 4D., 4D. Sub., 2D. Sub., Cl. Sed. Right | 1 | 1950 292 | 1950 292 | 1950 292 | 1950 292 | 1751 328 |
| | Left | 1 | 1950 293 | 1950 293 | 1950 293 | 1950 293 | 1751 329 |



MyMopar.com

## 23-64-O WINDOWS AND VENT WING - Cont'd

| CODE | REMARKS | PER CAR | PLYMOUTH | DODGE | DESOTO | CHRYSLER | IMPERIAL |
|---|---|---|---|---|---|---|---|
| 23-64-242 | BRACKET and PIVOT - Cont'd | | | | | | |
| | Sp. 4 D., Sp. 4D. Sub., Sp. Cl. Cp., Cv. Cp. Right | 1 | *2166 680 | *2166 680 | *2166 680 | *2166 680 | *2094 462 |
| | Left | 1 | 2166 681 | 2166 681 | 2166 681 | 2166 681 | 2094 463 |
| 23-64-246 | SHIM, Door Vent Wing Frame to Door | | | | | | |
| | Sp. 4 D., Sp. Cl. Cp., Cv. Cp. | ★ | ---- --- | ---- --- | ---- --- | ---- --- | 1349 190 |
| 23-64-247 | SCREW, Door Vent Wing Upper Pivot Anchor Plate or Clamp | 2 | *6000 374 | *6000 374 | *6000 374 | *6000 374 | *6000 374 |
| | SCREW, Door Vent Wing Lower Tension Clamp Adjusting | | | | | | |
| | 4 D., Cl. Sed., Sub. | 2 | 6006 244 | 6006 244 | 6006 244 | 6006 244 | 6006 244 |
| | Sp. Cl. Cp., Cv. Cp. | 2 | ---- --- | ---- --- | ---- --- | ---- --- | 6006 244 |
| 23-64-254 | TRACK, Rear Door Window Roller | | | | | | |
| | 4 D., 4 D. Sub. Right | 1 | 2165 294 | 2165 294 | 2165 294 | 2165 294 | ---- --- |
| | Left | 1 | 2165 295 | 2165 295 | 2165 295 | 2165 295 | ---- --- |
| | Sp. 4 D., Sp. 4 D. Sub. Front Right | 1 | 1883 884 | 1883 884 | 1883 884 | 1883 884 | ---- --- |
| | Left | 1 | 1883 885 | 1883 885 | 1883 885 | 1883 885 | ---- --- |
| | Rear | 2 | 1954 418 | 1954 418 | 1954 418 | 1954 418 | ---- --- |
| | NOTE: Also see Part Type Code 23-09-51 and 23-09-56. | | | | | | |
| 23-64-255 | FRAME or EXTENSION, Door Window Glass | | | | | | |
| | 4 D. Front Upper, Right | 1 | ---- --- | ---- --- | ---- --- | ---- --- | 1877 480 |
| | Left | 1 | ---- --- | ---- --- | ---- --- | ---- --- | 1877 481 |
| | w/Electric Vent Wing, Right | 1 | ---- --- | ---- --- | ---- --- | ---- --- | 1961 812 |
| | Left | 1 | ---- --- | ---- --- | ---- --- | ---- --- | 1961 813 |
| | Rear Upper, Right | 1 | ---- --- | ---- --- | ---- --- | ---- --- | 1877 372 |
| | Left | 1 | ---- --- | ---- --- | ---- --- | ---- --- | 1877 373 |
| | w/BRACKET, Rear Right | 1 | ---- --- | ---- --- | ---- --- | ---- --- | 2093 660 |
| | Left | 1 | ---- --- | ---- --- | ---- --- | ---- --- | 2093 661 |
| | FRAME or EXTENSION, Front Door Window Glass | | | | | | |
| | Sp. 4 D. Right | 1 | ---- --- | ---- --- | ---- --- | ---- --- | 1750 534 |
| | Left | 1 | ---- --- | ---- --- | ---- --- | ---- --- | 1750 535 |
| | FRAME or EXTENSION, Door Window | | | | | | |
| | Sp. Cl. Cp., Cv. Cp. Front Right | 1 | ---- --- | ---- --- | ---- --- | ---- --- | 1751 092 |
| | Left | 1 | ---- --- | ---- --- | ---- --- | ---- --- | 1751 093 |
| | FRAME or EXTENSION, Rear Door Window Glass | | | | | | |
| | Sp. 4 D. Upper and Front Right | 1 | ---- --- | ---- --- | ---- --- | ---- --- | 1691 842 |
| | Left | 1 | ---- --- | ---- --- | ---- --- | ---- --- | 1691 843 |
| | Rear Right | 1 | ---- --- | ---- --- | ---- --- | ---- --- | 1691 788 |
| | Left | 1 | ---- --- | ---- --- | ---- --- | ---- --- | 1691 789 |
| 23-64-261 | BOLT and WASHER, Door Upper Extension or Window Opening Frame Attaching | | | | | | |
| | 4 D., 5/16"-18 x 3/8" | ★ | ---- --- | ---- --- | ---- --- | ---- --- | 6000 324 |
| | 5/16"-18 x 5/8" | ★ | ---- --- | ---- --- | ---- --- | ---- --- | 6000 325 |
| 23-64-262 | NUT, Door Upper Extension or Window Opening Frame Attaching | | | | | | |
| | 4 D. | ★ | ---- --- | ---- --- | ---- --- | ---- --- | 6006 005 |
| 23-64-263 | WASHER, Window Roller Track Adjusting Stud to Panel | | | | | | |
| | Sp. 4 D., Sp. Cl. Cp., Cv. Cp. | ★ | ---- --- | ---- --- | ---- --- | ---- --- | 6006 192 |
| 23-64-265 | GLASS, Frame and Lower Channel, Front Door Window (see Note 1) | | | | | | |
| | Sp. 4 D., Sp. 4 D. Sub. Right | 1 | 1909 694 | 1909 694 | 1909 694 | 1909 694 | ---- --- |
| | Left | 1 | 1909 695 | 1909 695 | 1909 695 | 1909 695 | ---- --- |
| | Solex, Right | 1 | 1909 696 | 1909 696 | 1909 696 | 1909 696 | ---- --- |
| | Left | 1 | 1909 697 | 1909 697 | 1909 697 | 1909 697 | ---- --- |
| | GLASS, Frame and Lower Channel, Rear Door Window | | | | | | |
| | Sp. 4 D., D1, D2 Right | 1 | 1909 704 | 1909 698 | 1909 698 | 1909 698 | ---- --- |
| | Left | 1 | 1909 705 | 1909 699 | 1909 699 | 1909 699 | ---- --- |
| | Solex, Right | 1 | 1909 706 | 1909 700 | 1909 700 | 1909 700 | ---- --- |
| | Left | 1 | 1909 707 | 1909 701 | 1909 701 | 1909 701 | ---- --- |


MyMopar.com

## 23-64-0 WINDOWS AND VENT WING - Cont'd

| CODE | REMARKS | | PER CAR | PLYMOUTH | DODGE | DESOTO | CHRYSLER | IMPERIAL |
|---|---|---|---|---|---|---|---|---|
| 23-64-265 | GLASS - Cont'd | | | | | | | |
| | D3, D4 | Right | 1 | ---- --- | 1909 704 | ---- --- | ---- --- | ---- --- |
| | | Left | 1 | ---- --- | 1909 705 | ---- --- | ---- --- | ---- --- |
| | | Solex, Right | 1 | ---- --- | 1909 706 | ---- --- | ---- --- | ---- --- |
| | | Left | 1 | ---- --- | 1909 707 | ---- --- | ---- --- | ---- --- |
| | Sp. 4 D. Sub. | Right | 1 | 1909 698 | 1909 698 | ---- --- | 1909 698 | ---- --- |
| | | Left | 1 | 1909 699 | 1909 699 | ---- --- | 1909 699 | ---- --- |
| | | Solex, Right | 1 | 1909 700 | 1909 700 | ---- --- | 1909 700 | ---- --- |
| | | Left | 1 | 1909 701 | 1909 701 | ---- --- | 1909 701 | ---- --- |
| | 4 D. | Less Frame, Right | 1 | ---- --- | ---- --- | ---- --- | ---- --- | 2093 554 |
| | | Left | 1 | ---- --- | ---- --- | ---- --- | ---- --- | 2093 555 |
| | | Less Frame, Solex, Right | 1 | ---- --- | ---- --- | ---- --- | ---- --- | 2093 556 |
| | | Left | 1 | ---- --- | ---- --- | ---- --- | ---- --- | 2093 557 |
| | GLASS, Frame and Lower Channel, Door Window | | | | | | | |
| | Sp. Cl. Cp., Cv. Cp. | Right | 1 | 1909 302 | 1909 302 | 1909 710 | 1909 710 | ---- --- |
| | | Left | 1 | 1909 303 | 1909 303 | 1909 711 | 1909 711 | ---- --- |
| | | Solex, Right | 1 | 1909 304 | 1909 304 | 1909 712 | 1909 712 | ---- --- |
| | | Left | 1 | 1909 305 | 1909 305 | 1909 713 | 1909 713 | ---- --- |
| 23-64-273 | SUPPORT, Door Vent Wing Divisional Channel to Inside Lower Panel | | 2 | *1909 856 | *1909 856 | *1909 856 | *1909 856 | ---- --- |
| 23-64-275 | STUD and WASHER, Window Roller Track Adjusting | | ★ | 1883 554 | 1883 554 | 1883 554 | 1883 554 | ---- --- |
| | Sp. 4 D., Sp. 4 D. Sub., Sp. Cl. Cp., Cv. Cp. | Upper | ★ | ---- --- | ---- --- | ---- --- | ---- --- | 6006 409 |
| | | Lower | ★ | ---- --- | ---- --- | ---- --- | ---- --- | 6006 296 |
| 23-64-278 | GROMMET, Door Vent Wing Upper Pivot Bracket to Glass | | 2 | *1909 917 | *1909 917 | *1909 917 | *1909 917 | *1751 492 |
| 23-64-279 | WASHER or INSULATOR, Door Vent Wing Upper Pivot Bracket Anchor Plate or Clamp to Glass | | 2 | ---- --- | ---- --- | ---- --- | ---- --- | *1751 489 |
| 23-64-280 | PANEL, Quarter Window Opening | | | | | | | |
| | Cl. Sed., 2 D. Sub. | Front Right | 1 | 1869 868 | 1869 868 | ---- --- | ---- --- | ---- --- |
| | | Left | 1 | 1869 869 | 1869 869 | ---- --- | ---- --- | ---- --- |
| | Cl. Sed. | Upper Right | 1 | 1869 872 | 1869 872 | ---- --- | ---- --- | ---- --- |
| | | Left | 1 | 1869 873 | 1869 873 | ---- --- | ---- --- | ---- --- |
| | 2 D. Sub. | Upper Right | 1 | 1884 522 | ---- --- | ---- --- | ---- --- | ---- --- |
| | | Left | 1 | 1884 523 | ---- --- | ---- --- | ---- --- | ---- --- |
| | FRAME, Quarter Window | | | | | | | |
| | Sub. | Front Right | 1 | 1960 066 | 1960 066 | ---- --- | 1960 066 | ---- --- |
| | | Left | 1 | 1960 067 | 1960 067 | ---- --- | 1960 067 | ---- --- |
| | FRAME, Quarter Window Glass | | | | | | | |
| | Sp. Cl. Cp., Cv. Cp. | Front Right | 1 | ---- --- | ---- --- | ---- --- | ---- --- | 1751 890 |
| | | Left | 1 | ---- --- | ---- --- | ---- --- | ---- --- | 1751 891 |
| | | Upper and Rear Right | 1 | ---- --- | ---- --- | ---- --- | ---- --- | 1691 616 |
| | | Left | 1 | ---- --- | ---- --- | ---- --- | ---- --- | 1691 617 |
| 23-64-299 | TRACK or CHANNEL, Quarter Window Roller | | | | | | | |
| | Sp. Cl. Cp. | Front Right | 1 | ---- --- | ---- --- | ---- --- | ---- --- | 1810 860 |
| | | Left | 1 | ---- --- | ---- --- | ---- --- | ---- --- | 1810 861 |
| | | Rear Right | 1 | ---- --- | ---- --- | ---- --- | ---- --- | 1810 862 |
| | | Left | 1 | ---- --- | ---- --- | ---- --- | ---- --- | 1810 863 |
| | Cv. Cp. | Front Right | 1 | 1952 620 | 1952 620 | ---- --- | 1952 620 | 1810 860 |
| | | Left | 1 | 1952 621 | 1952 621 | ---- --- | 1952 621 | 1810 861 |
| | | Rear Right | 1 | ⊟1952 994 | ⊟1952 994 | ---- --- | ⊟1952 994 | 1810 862 |
| | | Left | 1 | ⊟1952 995 | ⊟1952 995 | ---- --- | ⊟1952 995 | 1810 863 |
| | Cl. Sed., 2D. Sub. | Right | 1 | 2165 294 | 2165 294 | ---- --- | ---- --- | ---- --- |
| | | Left | 1 | 2165 295 | 2165 295 | ---- --- | ---- --- | ---- --- |
| | Sp. Cl. Cp. | | 2 | 1952 725 | 1952 725 | *1952 725 | *1952 725 | ---- --- |

★ Indicates use as required.
⊟ Indicates parts not listed in any previous parts book.
Dec. 9, 1960 Supersedes April 20, 1960.



Printed in U.S.A.
Prices and specifications subject to change without notice.
* Indicates change or addition.
MyMopar.com

| CODE | REMARKS | | PER CAR | PLYMOUTH | DODGE | DESOTO | CHRYSLER | IMPERIAL |
|---|---|---|---|---|---|---|---|---|
| **23-64-0 WINDOWS AND VENT WING - Cont'd** | | | | | | | | |
| 23-64-306 | GLASS, Lower Pivot and Bracket, Door Vent Wing (see Note 1) | | | | | | | |
| | 4 D., 4 D. Sub., 2 D. Sub., Cl. Sed | Right | 1 | 1954 104 | 1954 104 | 1954 104 | 1954 104 | ---- --- |
| | | Left | 1 | 1954 105 | 1954 105 | 1954 105 | 1954 105 | ---- --- |
| | | Solex, Right | 1 | 1954 106 | 1954 106 | 1954 106 | 1954 106 | ---- --- |
| | | Left | 1 | 1954 107 | 1954 107 | 1954 107 | 1954 107 | ---- --- |
| | Sp. 4 D., Sp. 4 D. Sub., Sp. Cl. Cp., Cv. Cp. | | | | | | | |
| | | Right | 1 | 1954 100 | 1954 100 | 1954 100 | 1954 100 | ---- --- |
| | | Left | 1 | 1954 101 | 1954 101 | 1954 101 | 1954 101 | ---- --- |
| | | Solex, Right | 1 | 1954 102 | 1954 102 | 1954 102 | 1954 102 | ---- --- |
| | | Left | 1 | 1954 103 | 1954 103 | 1954 103 | 1954 103 | ---- --- |
| | 4D., Y1L, Y1M | Right | 1 | ---- --- | ---- --- | ---- --- | ---- --- | 1961 276 |
| | | Left | 1 | ---- --- | ---- --- | ---- --- | ---- --- | 1961 277 |
| | | Solex, Right | 1 | ---- --- | ---- --- | ---- --- | ---- --- | 1961 278 |
| | | Left | 1 | ---- --- | ---- --- | ---- --- | ---- --- | 1961 279 |
| | 4D. Sed. w/Power Vent Windows, | Right | 1 | ---- --- | ---- --- | ---- --- | ---- --- | 1961 930 |
| | | Left | 1 | ---- --- | ---- --- | ---- --- | ---- --- | 1961 931 |
| | | Solex, Right | 1 | ---- --- | ---- --- | ---- --- | ---- --- | 1961 932 |
| | | Left | 1 | ---- --- | ---- --- | ---- --- | ---- --- | 1961 933 |
| | Sp. 4D., Sp. Cl. Cp., Cv. Cp., Y1L, Y1M | Right | 1 | ---- --- | ---- --- | ---- --- | ---- --- | 1961 190 |
| | | Left | 1 | ---- --- | ---- --- | ---- --- | ---- --- | 1961 191 |
| | | Solex, Right | 1 | ---- --- | ---- --- | ---- --- | ---- --- | 1961 192 |
| | | Left | 1 | ---- --- | ---- --- | ---- --- | ---- --- | 1961 193 |
| | Sp. 4 D., Sp. Cl. Cp., Cv. Cp. w/Power Vent Windows, | Right | 1 | ---- --- | ---- --- | ---- --- | ---- --- | 1961 848 |
| | | Left | 1 | ---- --- | ---- --- | ---- --- | ---- --- | 1961 849 |
| | | Solex, Right | 1 | ---- --- | ---- --- | ---- --- | ---- --- | 1961 850 |
| | | Left | 1 | ---- --- | ---- --- | ---- --- | ---- --- | 1961 851 |
| 23-64-308 | GLASS, Front Door Window (see Note 2) | | | | | | | |
| | 4 D., 4 D. Sub. | | 2 | 1883 268 | 1883 268 | 1883 268 | 1883 268 | ---- --- |
| | | Solex | 2 | 1883 269 | 1883 269 | 1883 269 | 1883 269 | ---- --- |
| | 4 D. | Right | 1 | ---- --- | ---- --- | ---- --- | ---- --- | 1877 660 |
| | | Left | 1 | ---- --- | ---- --- | ---- --- | ---- --- | 1877 661 |
| | | Solex, Right | 1 | ---- --- | ---- --- | ---- --- | ---- --- | 1877 662 |
| | | Left | 1 | ---- --- | ---- --- | ---- --- | ---- --- | 1877 663 |
| | Sp. 4 D. | Right | 1 | ---- --- | ---- --- | ---- --- | ---- --- | 1691 156 |
| | | Left | 1 | ---- --- | ---- --- | ---- --- | ---- --- | 1691 157 |
| | | Solex, Right | 1 | ---- --- | ---- --- | ---- --- | ---- --- | 1691 196 |
| | | Left | 1 | ---- --- | ---- --- | ---- --- | ---- --- | 1691 197 |
| | GLASS, Rear Door Window | | | | | | | |
| | 4 D., D3, D4 | | 2 | 1950 255 | 1950 255 | 1883 271 | 1883 271 | ---- --- |
| | | Solex | 2 | 1950 256 | 1950 256 | 1883 272 | 1883 272 | ---- --- |
| | | | 2 | ---- --- | 1883 271 | ---- --- | ---- --- | ---- --- |
| | D1, D2 | Solex | 2 | ---- --- | 1883 272 | ---- --- | ---- --- | ---- --- |
| | Sp. 4 D. | Right | 1 | ---- --- | ---- --- | ---- --- | ---- --- | 1691 152 |
| | | Left | 1 | ---- --- | ---- --- | ---- --- | ---- --- | 1691 153 |
| | | Solex, Right | 1 | ---- --- | ---- --- | ---- --- | ---- --- | 1691 174 |
| | | Left | 1 | ---- --- | ---- --- | ---- --- | ---- --- | 1691 175 |
| | 4 D. Sub. | | 2 | 1883 271 | 1883 271 | ---- --- | ---- --- | ---- --- |
| | | Solex | 2 | 1883 272 | 1883 272 | ---- --- | ---- --- | ---- --- |
| | GLASS, Door Window | | | | | | | |
| | Sp. Cl. Cp., Cv. Cp. | Right | 1 | ---- --- | ---- --- | ---- --- | ---- --- | 1691 076 |
| | | Left | 1 | ---- --- | ---- --- | ---- --- | ---- --- | 1691 077 |
| | | Solex, Right | 1 | ---- --- | ---- --- | ---- --- | ---- --- | 1691 078 |
| | | Left | 1 | ---- --- | ---- --- | ---- --- | ---- --- | 1691 079 |
| | 2 D. Sub., Cl. Sed. | | 2 | 1884 888 | 1884 888 | ---- --- | ---- --- | ---- --- |
| | | Solex | 2 | 1884 889 | 1884 889 | ---- --- | ---- --- | ---- --- |


MyMopar.com

| CODE | REMARKS | PER CAR | PLYMOUTH | DODGE | DESOTO | CHRYSLER | IMPERIAL |
|---|---|---|---|---|---|---|---|
| **23-64-0 WINDOWS AND VENT WING - Cont'd** | | | | | | | |
| 23-64-311 | GLASS, Quarter Window (see Note 2) | | | | | | |
| | Sub. Stationary, Right | 1 | 1878 180 | 1878 180 | ---- --- | 1878 180 | ---- --- |
| | Left | 1 | 1878 181 | 1878 181 | ---- --- | 1878 181 | ---- --- |
| | Stationary, Solex, Right | 1 | 1878 184 | 1878 184 | ---- --- | 1878 184 | ---- --- |
| | Left | 1 | 1878 185 | 1878 185 | ---- --- | 1878 185 | ---- --- |
| | 2 D. Sub. Front | 2 | 1950 683 | ---- --- | ---- --- | ---- --- | ---- --- |
| | Solex, Front | 2 | 1950 684 | ---- --- | ---- --- | ---- --- | ---- --- |
| | Cl. Sed. | 2 | 1950 667 | 1950 667 | ---- --- | ---- --- | ---- --- |
| | Solex | 2 | 1950 668 | 1950 668 | ---- --- | ---- --- | ---- --- |
| | Sp. Cl. Cp., Cv. Cp. Right | 1 | ---- --- | ---- --- | ---- --- | ---- --- | 1691 238 |
| | Left | 1 | ---- --- | ---- --- | ---- --- | ---- --- | 1691 239 |
| | Solex, Right | 1 | ---- --- | ---- --- | ---- --- | ---- --- | 1691 240 |
| | Left | 1 | ---- --- | ---- --- | ---- --- | ---- --- | 1691 241 |
| 23-64-314 | GLASS, Rear Window (see Note 2) | | | | | | |
| | 4 D., Cl. Sed., D3, D4, C1, C2 | 1 | 1869 628 | 1869 628 | 1869 630 | 1869 630 | ---- --- |
| | Solex | 1 | 1954 074 | 1954 074 | 1954 217 | 1954 217 | ---- --- |
| | 4 D., D1, D2, C3 | 1 | ---- --- | *1869 630 | ---- --- | ⊟2165 515 | ---- --- |
| | Solex | 1 | ---- --- | 1954 217 | ---- --- | *1952 643 | ---- --- |
| | 4 D., Y1L, Y1M | 1 | ---- --- | ---- --- | ---- --- | ---- --- | 1877 316 |
| | Solex | 1 | ---- --- | ---- --- | ---- --- | ---- --- | 1877 323 |
| | Solex and Shaded | 1 | ---- --- | ---- --- | ---- --- | ---- --- | 1877 325 |
| | 4D., Y1H | 1 | ---- --- | ---- --- | ---- --- | ---- --- | 1961 508 |
| | Solex | 1 | ---- --- | ---- --- | ---- --- | ---- --- | 1961 646 |
| | Sp. 4D., D1, S1, C1, C2 | 1 | ---- --- | 1869 630 | 1869 630 | 1869 630 | ---- --- |
| | Solex | 1 | ---- --- | 1954 217 | 1954 217 | 1954 217 | ---- --- |
| | Sp. 4 D. w/High Window | 1 | ---- --- | ⊟2165 515 | ⊟2165 515 | ⊟2165 515 | ---- --- |
| | Solex | 1 | ---- --- | *1952 643 | *1952 643 | *1952 643 | ---- --- |
| | Sp. 4 D., D3, D4, Y1L, Y1M | 1 | *2165 514 | *2165 514 | ---- --- | ---- --- | *1877 316 |
| | Solex | 1 | 1952 699 | *1952 699 | ---- --- | ---- --- | 1877 323 |
| | Solex and Shaded | 1 | ---- --- | ---- --- | ---- --- | ---- --- | 1877 325 |
| | Sp. 4 D., Y1H | 1 | ---- --- | ---- --- | ---- --- | ---- --- | 1961 508 |
| | Solex | 1 | ---- --- | ---- --- | ---- --- | ---- --- | 1961 646 |
| | Sp. Cl. Cp., P1M, D1, D3M, D4M | 1 | 1869 629 | 1869 629 | 1877 958 | 1877 958 | 1877 317 |
| | Solex | 1 | 1954 237 | 1954 237 | 1878 161 | 1878 161 | 1877 322 |
| | Solex and Shaded | 1 | ---- --- | ---- --- | ---- --- | ---- --- | 1877 324 |
| | Sp. Cl. Cp. w/High Window | 1 | ⊟1964 261 | ⊟1964 261 | ---- --- | ---- --- | ---- --- |
| | Solex | 1 | *1952 668 | *1952 668 | ---- --- | ---- --- | ---- --- |

NOTE: New Yorker Rear Window is Special Equipment for Windsor and Saratoga 4 Door Sedans and Special 4 D. Sedans. Polara Rear Window is Special Equipment for Matador Special 4 Door Sedans. Polara or Phoenix Rear Window is Special Equipment for Matador and Pioneer Special Club Coupes.
Height at Center of Standard Equipment Window Glass is as follows: 4 Door Sedan and Special 4 Door Sedan - New Yorker and Polara, 33 3/4"; Windsor, Saratoga and Matador, 21 3/4"; Special Club Coupe - Polara and Phoenix, 36", Matador and Pioneer, 24 1/2".

## 23-66-0 WINDSHIELD

NOTE 1: PLACE ORDERS WITH YOUR USUAL SOURCE OF SUPPLY FOR MOPAR PARTS.

NOTE 2: PLACE ORDERS DIRECT WITH PITTSBURGH PLATE GLASS COMPANY.

| | | | | | | | |
|---|---|---|---|---|---|---|---|
| 23-66-135 | GLASS, Windshield (see Note 2) | 1 | *1869 627 | *1869 627 | *1869 627 | *1869 627 | *1651 431 |
| | Solex | 1 | 1954 216 | 1954 216 | 1954 216 | 1954 216 | 1690 871 |
| 23-66-235 | WEATHERSTRIP, Windshield Glass | 1 | *1882 146 | *1882 146 | *1882 146 | *1882 146 | *2093 638 |

## 23-67-0 WINDSHIELD WIPER

| | | | | | | | |
|---|---|---|---|---|---|---|---|
| 23-67-5 | ARM, Windshield Wiper | | | | | | |
| | S1 Right | 1 | 1704 768 | 1704 768 | 1704 768 | 1779 992 | ---- --- |
| | Left | 1 | 1704 769 | 1704 769 | 1704 769 | 1779 993 | ---- --- |
| | S3 Right | 1 | ---- --- | ---- --- | 1779 992 | ---- --- | ---- --- |
| | Left | 1 | ---- --- | ---- --- | 1779 993 | ---- --- | ---- --- |


MyMopar.com

| CODE | REMARKS | PER CAR | PLYMOUTH | DODGE | DESOTO | CHRYSLER | IMPERIAL |
|---|---|---|---|---|---|---|---|
| **23-67-0** | **WINDSHIELD WIPER - Cont'd** | | | | | | |
| 23-67-5 | ARM and BLADE, Windshield Wiper | | | | | | |
| | Right | 1 | ---- --- | ---- --- | ---- --- | ---- --- | 1753 214 |
| | Left | 1 | ---- --- | ---- --- | ---- --- | ---- --- | 1753 215 |
| 23-67-10 | GEAR and DRIVE End Cover Plate GASKET PACKAGE, Windshield Wiper Motor | | | | | | |
| | w/Single Speed AutoLite Motor | 1 | 1879 601 | 1879 601 | 1879 601 | ---- --- | ---- --- |
| | w/Variable Speed Motor | 1 | 1879 598 | 1879 598 | 1879 598 | 1879 598 | 1879 598 |
| 23-67-16 | BRUSH and SPRING PACKAGE, Windshield Wiper Motor | | | | | | |
| | w/Single Speed Motor, AutoLite | 1 | 1752 518 | 1752 518 | 1752 518 | ---- --- | ---- --- |
| | General Industries | 1 | 1886 558 | 1886 558 | 1886 558 | ---- --- | ---- --- |
| | w/Variable Speed Motor | 1 | 1627 273 | 1627 273 | 1627 273 | 1627 273 | 1627 273 |
| 23-67-18 | BRACKET, Windshield Wiper Motor Mounting | | | | | | |
| | w/Single Speed | 1 | *1838 293 | *1838 293 | *1838 293 | ---- --- | ---- --- |
| | w/Variable Speed | 1 | 1838 289 | 1838 289 | 1838 289 | 1838 289 | 1838 289 |
| 23-67-19 | BOLT, Windshield Wiper Mounting Bracket Brace | 1 | ---- --- | ---- --- | ---- --- | *6006 120 | *6006 120 |
| 23-67-20 | GROMMET, Windshield Wiper Motor Mounting | 3 | *1594 992 | *1594 992 | *1594 992 | *1594 992 | *1594 992 |
| 23-67-25 | BLADE, Windshield Wiper | 2 | *1879 499 | *1879 499 | *1879 499 | *1879 499 | ---- --- |
| | REFILL, Windshield Wiper Blade | 2 | *1818 892 | *1818 892 | *1818 892 | *1818 892 | *1818 892 |
| 23-67-41 | WIRING, Windshield Wiper Switch to Motor Connecting w/Variable Speed Wipers | 1 | ⊟1971 628 | ---- --- | ---- --- | ---- --- | ---- --- |
| 23-67-48 | ADAPTER, Windshield Wiper Pivot | | | | | | |
| | Right | 1 | ---- --- | ---- --- | ---- --- | ---- --- | 1704 062 |
| | Left | 1 | ---- --- | ---- --- | ---- --- | ---- --- | 1704 063 |
| 23-67-49 | GASKET, Windshield Wiper Pivot Adapter | 2 | ---- --- | ---- --- | ---- --- | ---- --- | *1704 066 |
| 23-67-50 | NUT, Windshield Wiper Pivot Adapter | 2 | ---- --- | ---- --- | ---- --- | ---- --- | *1770 140 |
| 23-67-61 | GEAR, Windshield Wiper Motor | | | | | | |
| | w/Single Speed Motor, AutoLite | 1 | 1879 601 | 1879 601 | 1879 601 | ---- --- | ---- --- |
| | General Industries | 1 | 1886 557 | 1886 557 | 1886 557 | ---- --- | ---- --- |
| | w/Variable Speed Motor | 1 | 1818 685 | 1818 685 | 1818 685 | 1818 685 | 1818 685 |
| 23-67-62 | KEY, Windshield Wiper Motor Gear | | | | | | |
| | w/Single Speed AutoLite Motor | 1 | *1604 243 | *1604 243 | *1604 243 | ---- --- | ---- --- |
| 23-67-76 | LEVER or ARM, Windshield Wiper Link Crank | | | | | | |
| | w/Single Speed | 1 | 1838 936 | 1838 936 | 1838 936 | ---- --- | ---- --- |
| | w/Variable Speed | 1 | 1838 292 | 1838 292 | 1838 292 | 1838 292 | 1838 292 |
| 23-67-79 | LINK, Windshield Wiper Crank Lever to Pivot | | | | | | |
| | w/Single Speed Wipers, Right | 1 | 1838 934 | 1838 934 | 1838 934 | ---- --- | ---- --- |
| | Left | 1 | 1838 935 | 1838 935 | 1838 935 | ---- --- | ---- --- |
| | w/Variable Speed Wiper, Right | 1 | 1842 407 | 1842 407 | 1842 407 | 1842 407 | 1841 679 |
| | Left | 1 | 1838 291 | 1838 291 | 1838 291 | 1838 291 | 1841 680 |
| 23-67-80 | RETAINER, Windshield Wiper Link | | | | | | |
| | to Pivot | 2 | 1605 299 | 1605 299 | 1605 299 | 1605 299 | 1605 299 |
| | to Crank Lever, Right | 1 | 1642 029 | 1642 029 | 1642 029 | 1642 029 | 1642 029 |
| | Left | 1 | 1886 202 | 1886 202 | 1886 202 | 1886 202 | 1886 202 |
| 23-67-81 | WASHER, Windshield Wiper Link to Crank Lever, Felt | | | | | | |
| | w/Single Speed Wipers | ★ | 1540 383 | 1540 383 | 1540 383 | ---- --- | ---- --- |
| 23-67-82 | WASHER, Windshield Wiper Link to Pivot | 2 | *1605 604 | *1605 604 | *1605 604 | *1605 604 | *1605 604 |
| | WASHER, Windshield Wiper Link to Crank Lever, Steel | | | | | | |
| | w/Variable Speed Wipers, Plain | 1 | 1770 289 | 1770 289 | 1770 289 | 1770 289 | 1770 289 |
| | Spring Type | 2 | 1770 290 | 1770 290 | 1770 290 | 1770 290 | 1770 290 |
| | Shakeproof | 1 | 1770 296 | 1770 296 | 1770 296 | 1770 296 | 1770 296 |
| 23-67-85 | GASKET, Windshield Wiper Pivot | 2 | *1887 001 | *1887 001 | *1887 001 | *1887 001 | *1704 066 |

★ Indicates use as required.
⊟ Indicates parts not listed in any previous parts book.
* Indicates change or addition.



MyMopar.com

Printed in U.S.A.
Prices and specifications subject to change without notice.
Dec. 9, 1960 Supersedes April 20, 1960.

## 23-67-0 WINDSHIELD WIPER - Cont'd

| CODE | REMARKS | PER CAR | PLYMOUTH | DODGE | DESOTO | CHRYSLER | IMPERIAL |
|---|---|---|---|---|---|---|---|
| 23-67-86 | PIVOT, Windshield Wiper Arm | 2 | *1841 191 | *1841 191 | *1841 191 | *1841 191 | ---- --- |
| | Right | 1 | ---- --- | ---- --- | ---- --- | ---- --- | 1841 682 |
| | Left | 1 | ---- --- | ---- --- | ---- --- | ---- --- | 1841 683 |
| 23-67-91 | SCREW and WASHER, Windshield Wiper Pivot Mounting | 4 | ---- --- | ---- --- | ---- --- | ---- --- | *1704 061 |
| 23-67-95 | NUT and WASHER, Windshield Wiper Pivot Mounting | 4 | ⊟2076 232 | ⊟2076 232 | ⊟2076 232 | ⊟2076 232 | ---- --- |
| 23-67-98 | MOTOR, Windshield Wiper | | | | | | |
| | Single Speed | 1 | 1879 583 | 1879 583 | 1879 583 | ---- --- | ---- --- |
| | Variable Speed | 1 | 1842 964 | 1842 964 | 1842 964 | 1842 964 | 1842 964 |
| 23-67-100 | SPACER, Windshield Wiper Motor Mounting Grommet 15/32" hole | 3 | 1594 995 | 1594 995 | 1594 995 | 1594 995 | 1594 995 |
| 23-67-102 | WASHER, Windshield Wiper Motor Mounting Screw 9/32" hole | 3 | 1594 993 | 1594 993 | 1594 993 | 1594 993 | 1594 993 |
| 23-67-106 | ARMATURE, Windshield Wiper Motor | | | | | | |
| | w/Single Speed AutoLite Motor | 1 | 1818 878 | 1818 878 | 1818 878 | ---- --- | ---- --- |
| | w/Variable Speed Motor | 1 | 1818 813 | 1818 813 | 1818 813 | 1818 813 | 1818 813 |
| 23-67-111 | COIL, Windshield Wiper Motor Field | | | | | | |
| | w/Single Speed AutoLite Motor | 1 | 1818 876 | 1818 876 | 1818 876 | ---- --- | ---- --- |
| | w/Variable Speed Motor | 1 | 1818 810 | 1818 810 | 1818 810 | 1818 810 | 1818 810 |
| 23-67-129 | REINFORCEMENT, Windshield Wiper Motor Mounting | 1 | *1846 350 | *1846 350 | *1846 350 | *1846 350 | *1846 350 |
| 23-67-160 | SWITCH, Windshield Wiper | | | | | | |
| | Single Speed | 1 | 2084 297 | *1879 267 | *1879 267 | ---- --- | ---- --- |
| | Variable Speed | 1 | 2096 988 | 1971 705 | 1971 705 | 1971 707 | ---- --- |
| | Variable Speed, w/Washer ACTUATOR | 1 | ---- --- | ---- --- | 2096 231 | 1886 770 | 1886 769 |
| | S1, Single, Speed, w/Washer ACTUATOR | 1 | ---- --- | ---- --- | 2096 314 | ---- --- | ---- --- |
| 23-67-161 | NUT, Windshield Wiper Switch Mounting | 1 | *1887 603 | ---- --- | ---- --- | ---- --- | *1439 758 |
| 23-67-163 | CIRCUIT BREAKER, Windshield Wiper | | | | | | |
| | w/TERMINAL | 1 | 1770 661 | 1770 661 | 1770 661 | ⊟2097 148 | *1886 696 |
| | w/o Terminal | 1 | 1642 384 | 1642 384 | 1642 384 | 1642 384 | 1642 384 |
| 23-67-164 | SWITCH CONTACT, Cover PLATE and GASKET PACKAGE, Windshield Wiper Motor Drive End | | | | | | |
| | w/Single Speed AutoLite Motor | 1 | 1879 602 | 1879 602 | 1879 602 | ---- --- | ---- --- |
| | w/Variable Speed Motor | 1 | 1879 599 | 1879 599 | 1879 599 | 1879 599 | 1879 599 |
| 23-67-166 | TERMINAL, Windshield Wiper Switch Circuit Breaker | 1 | *1770 660 | *1770 660 | *1770 660 | *1770 660 | *1770 660 |
| 23-67-190 | BEZEL, Windshield Wiper Switch Title Lamp Retainer | 1 | ---- --- | ---- --- | ---- --- | ---- --- | *1887 784 |
| 23-67-194 | KNOB, Windshield Wiper Switch | | | | | | |
| | D1, D2, S3, C2, C3 | 1 | 1887 591 | 1887 860 | 1887 874 | 1887 989 | 1887 934 |
| | D3, D4, S1, C1 w/o Windshield Washers | 1 | ---- --- | 2096 309 | 1887 909 | 1887 991 | ---- --- |
| | w/Windshield WASHERS | 1 | ---- --- | ---- --- | 1887 874 | 1887 989 | ---- --- |
| 23-67-195 | BEZEL, Windshield Wiper Switch | 1 | *1887 602 | *1887 789 | *2096 381 | *1887 962 | ---- --- |
| 23-67-196 | BUTTON, Windshield Wiper Switch Knob w/CLIP | 1 | ---- --- | ---- --- | ---- --- | 1972 512 | 1972 512 |
| 23-67-202 | SPRING, Windshield Wiper Link w/Variable Speed Wipers | 2 | *1605 602 | *1605 602 | *1605 602 | *1605 602 | *1605 602 |
| 23-67-203 | TRIP, Windshield Wiper Link Spring w/Variable Speed Wipers | 2 | *1753 712 | *1753 712 | *1753 712 | *1753 712 | *1753 712 |
| 23-67-204 | CAM, Windshield Wiper Link w/Variable Speed Wipers | 2 | *1753 711 | *1753 711 | *1753 711 | *1753 711 | *1753 711 |

★ Indicates use as required.
⊟ Indicates parts not listed in any previous parts book.
Dec. 9, 1960 Supersedes April 20, 1960.



MyMopar.com

Printed in U.S.A.
Prices and specifications subject to change without notice.
* Indicates change or addition.

# GROUP 24 - AIR CONDITIONING

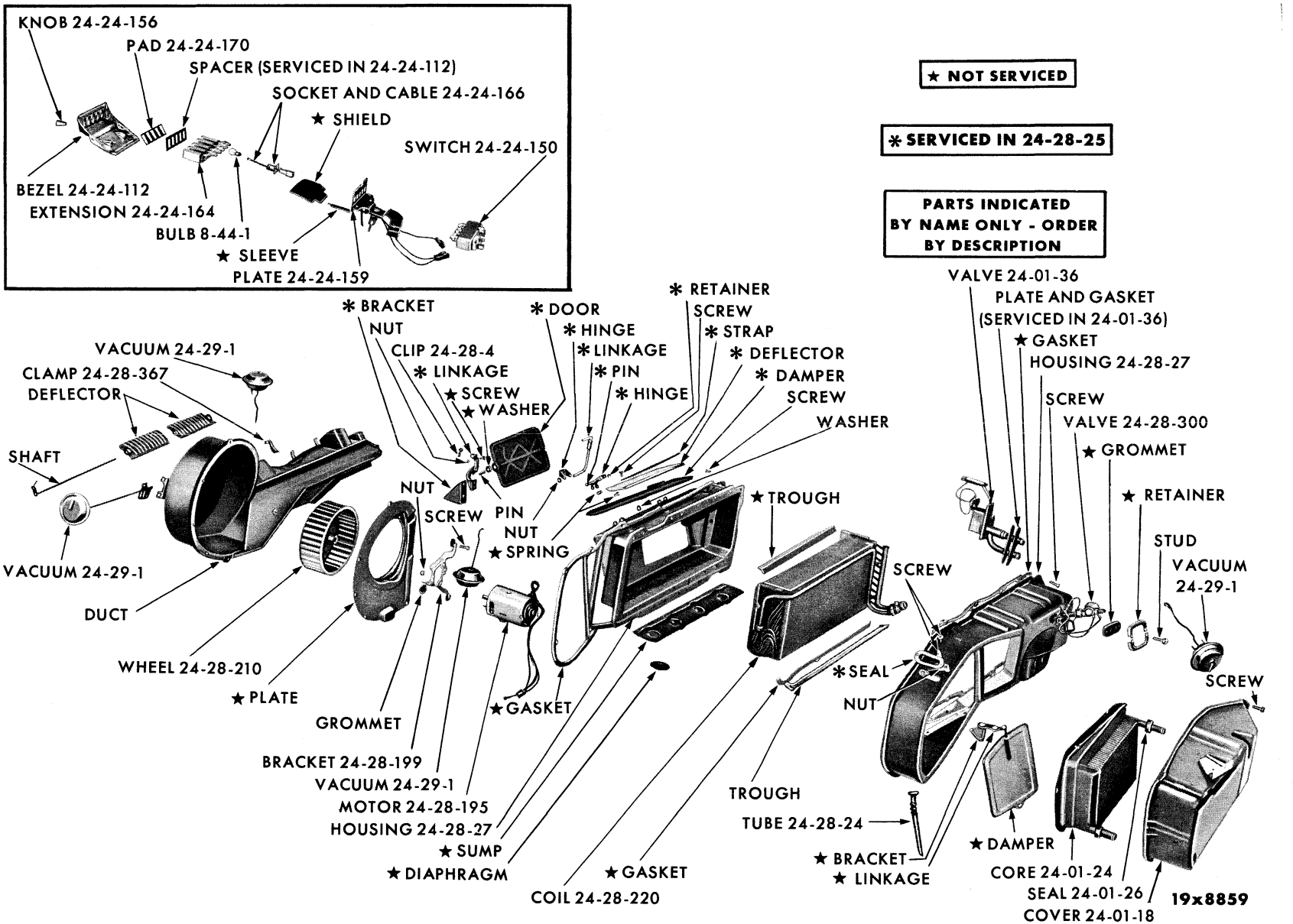


HEATER AND AIR CONDITIONING SYSTEM

MyMopar.com

PARTS INDICATED BY NAME ONLY - ORDER BY DESCRIPTION

★ NOT SERVICED
□ SERVICED IN 24-25-3
▸ SERVICED IN 24-25-95
✻ SERVICED IN 24-25-246

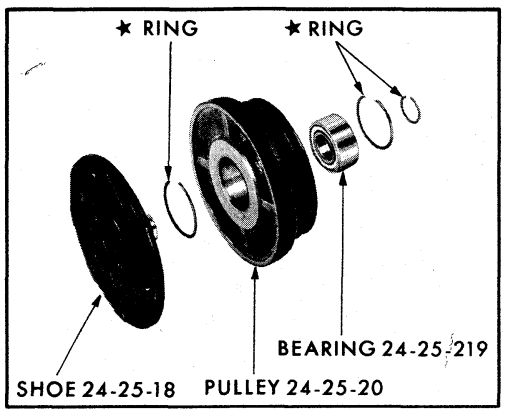





AIR CONDITIONING AIR COMPRESSOR

MyMopar.com

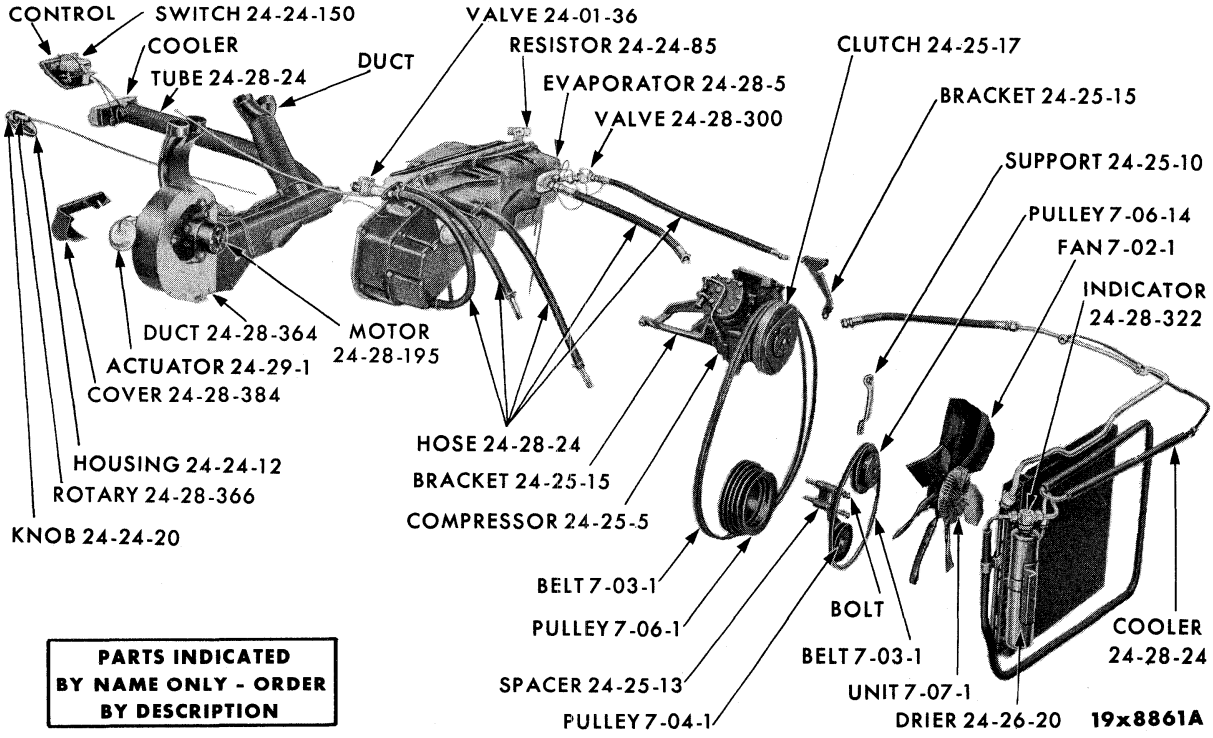


AIR CONDITIONING SYSTEM - COWL TYPE

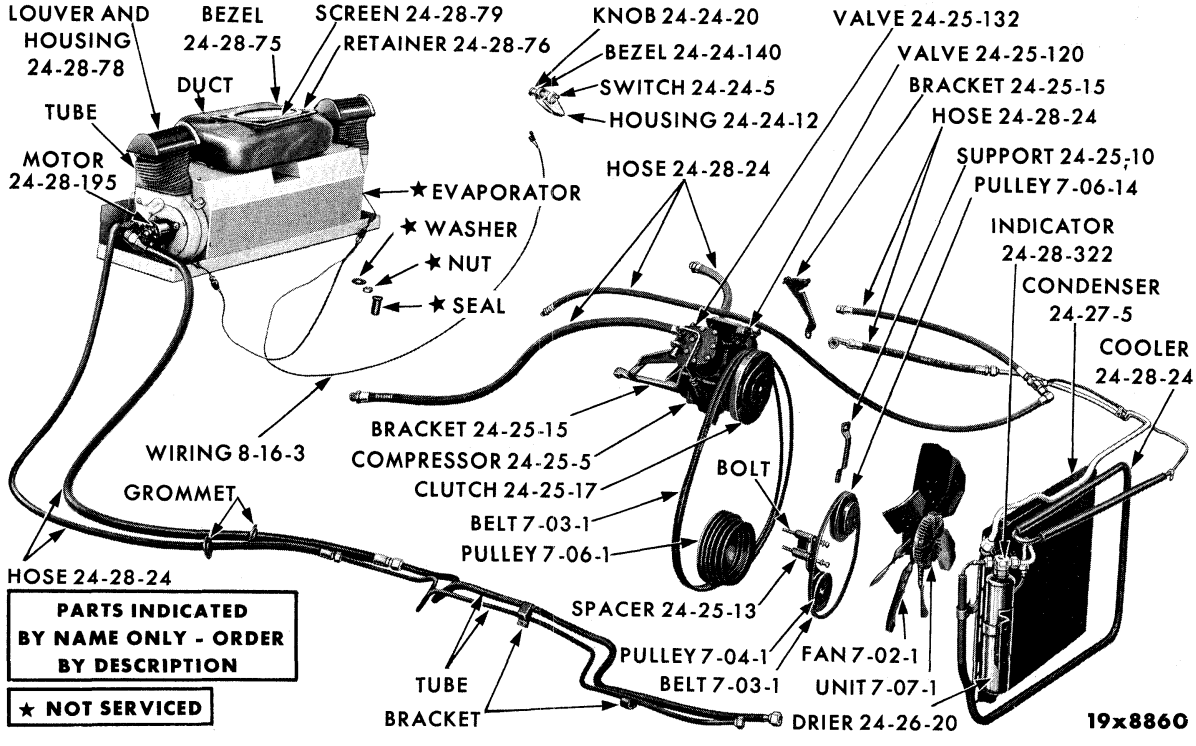


AIR CONDITIONING SYSTEM - TRUNK TYPE



MyMopar.com

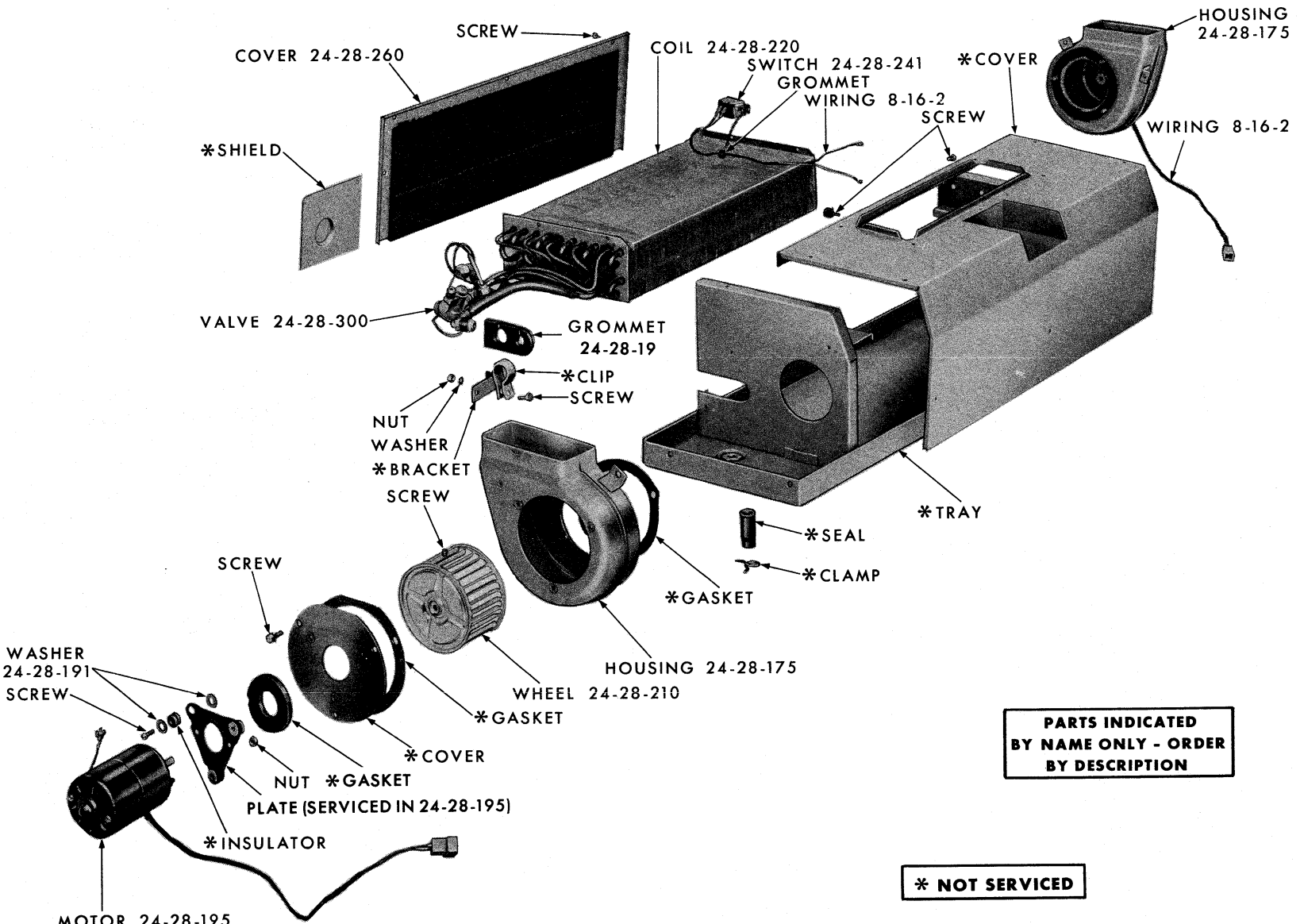


**PARTS INDICATED BY NAME ONLY - ORDER BY DESCRIPTION**

*** NOT SERVICED**

**19x8368A**

AIR CONDITIONING EVAPORATOR - TRUNK TYPE

MyMopar.com

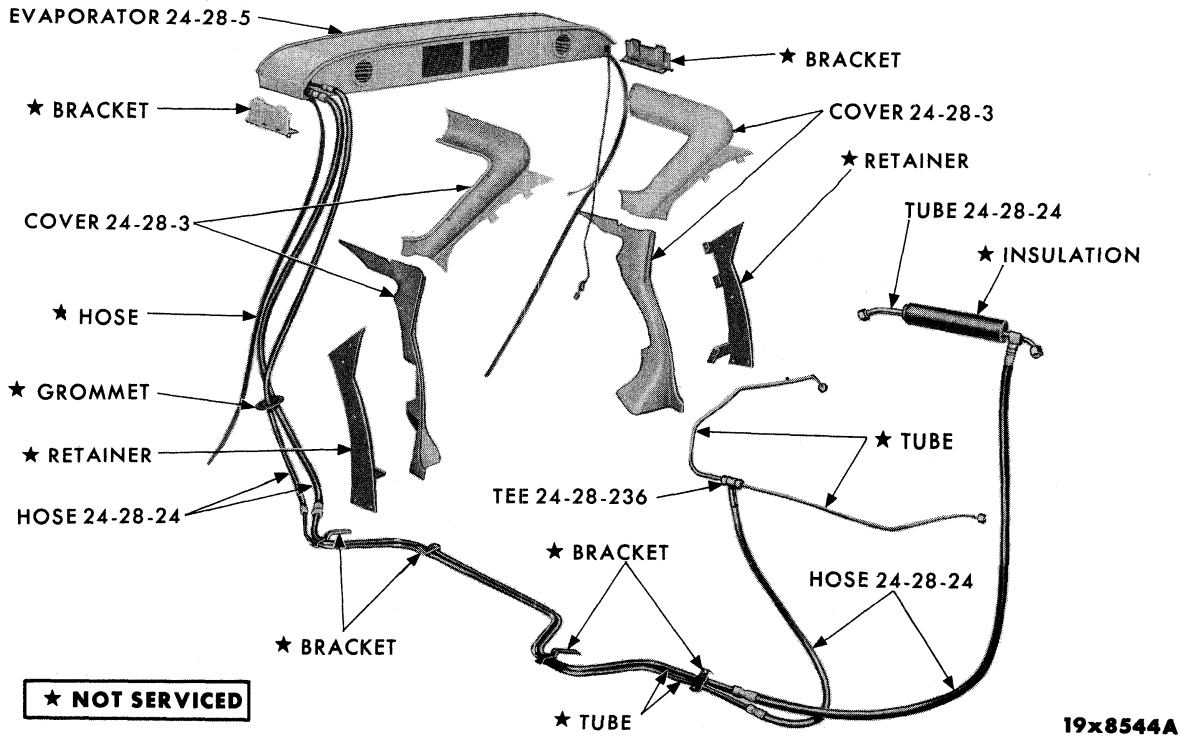


AIR CONDITIONING SYSTEM - SUBURBANS

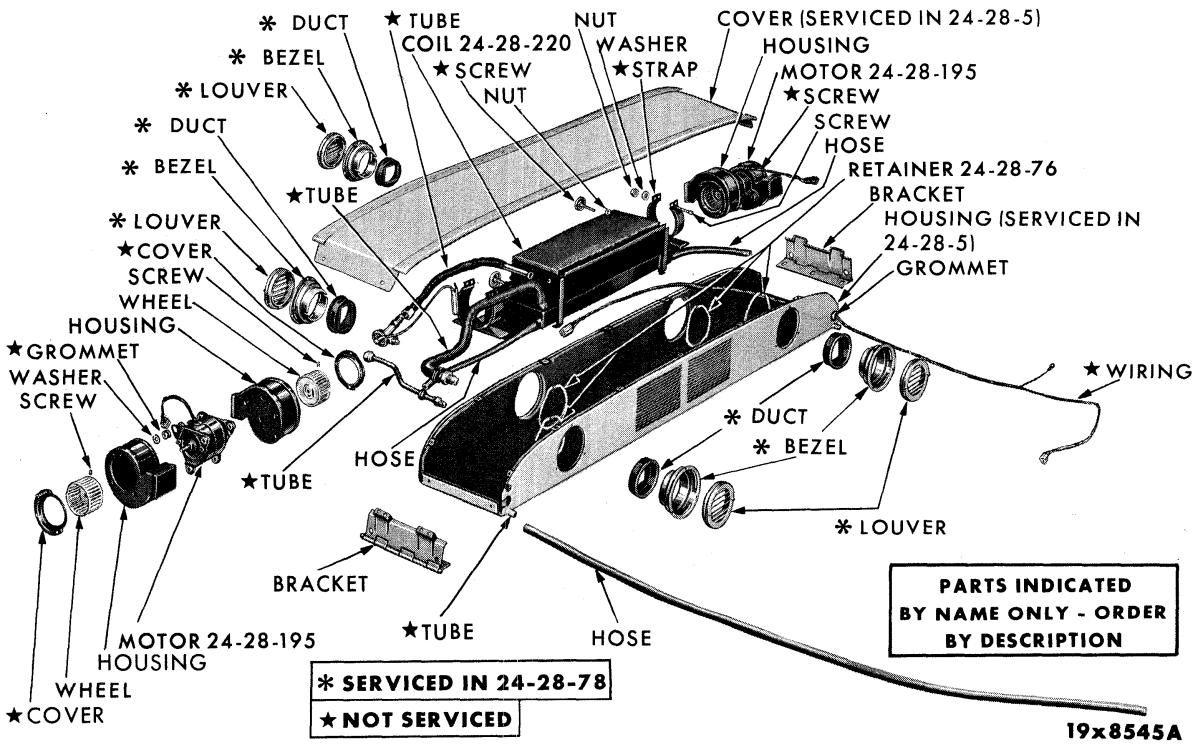


AIR CONDITIONING EVAPORATOR - SUBURBANS



MyMopar.com

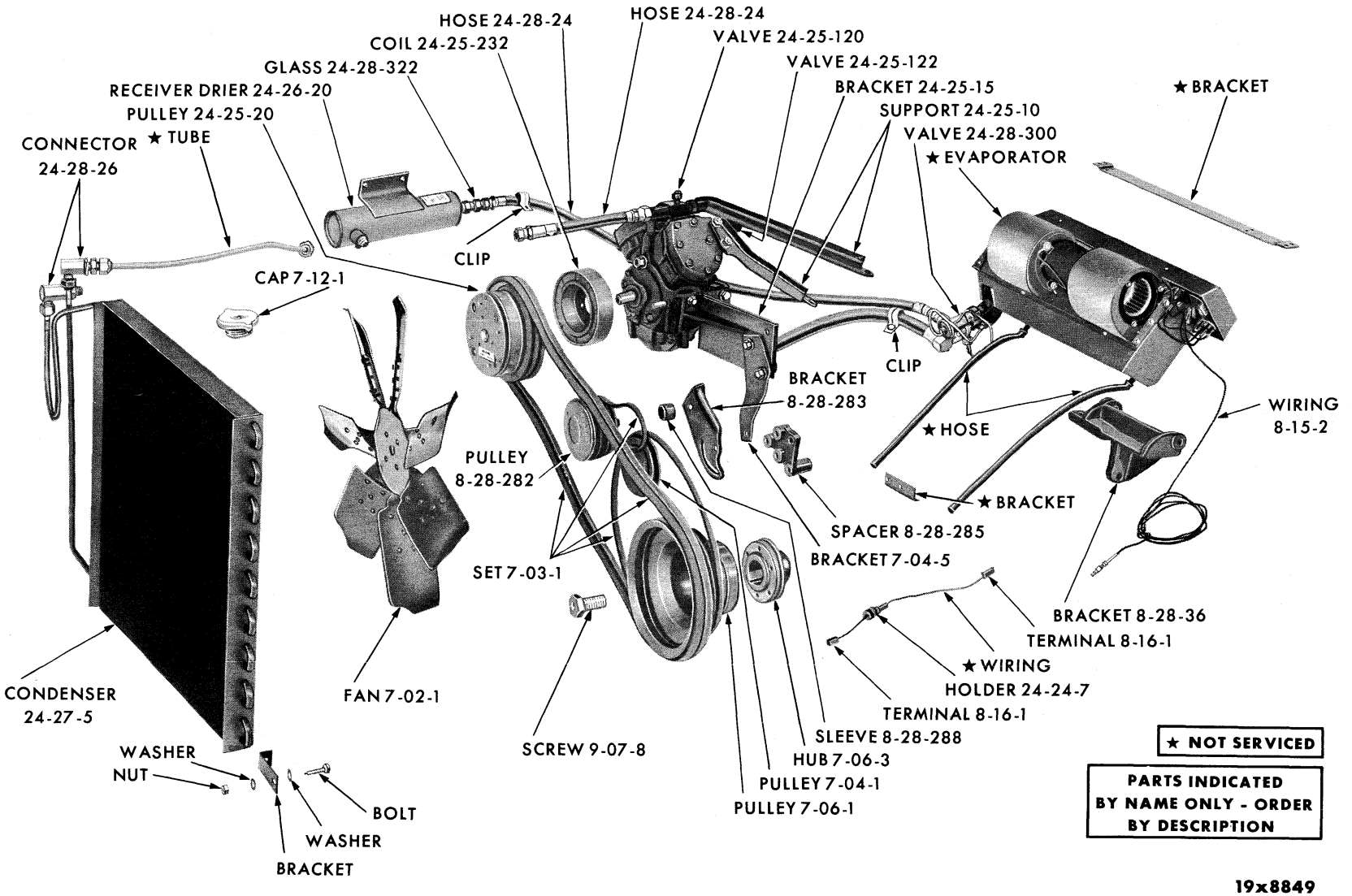


★ NOT SERVICED

PARTS INDICATED BY NAME ONLY - ORDER BY DESCRIPTION

19x8849

AIR CONDITIONING SYSTEM - MOPAR MODEL "E"

MyMopar.com

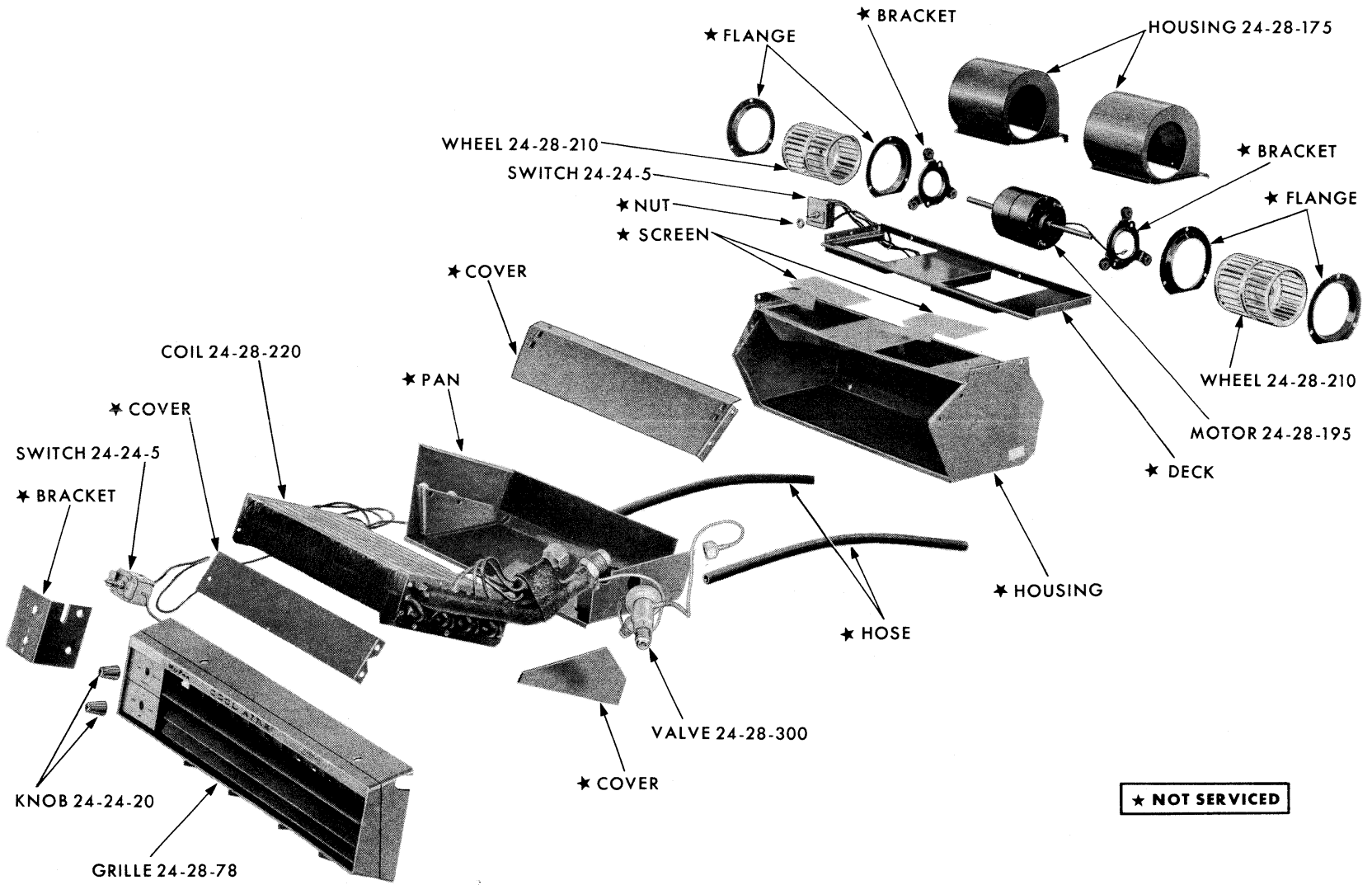


AIR CONDITIONING EVAPORATOR - MOPAR MODEL "E"

MyMopar.com

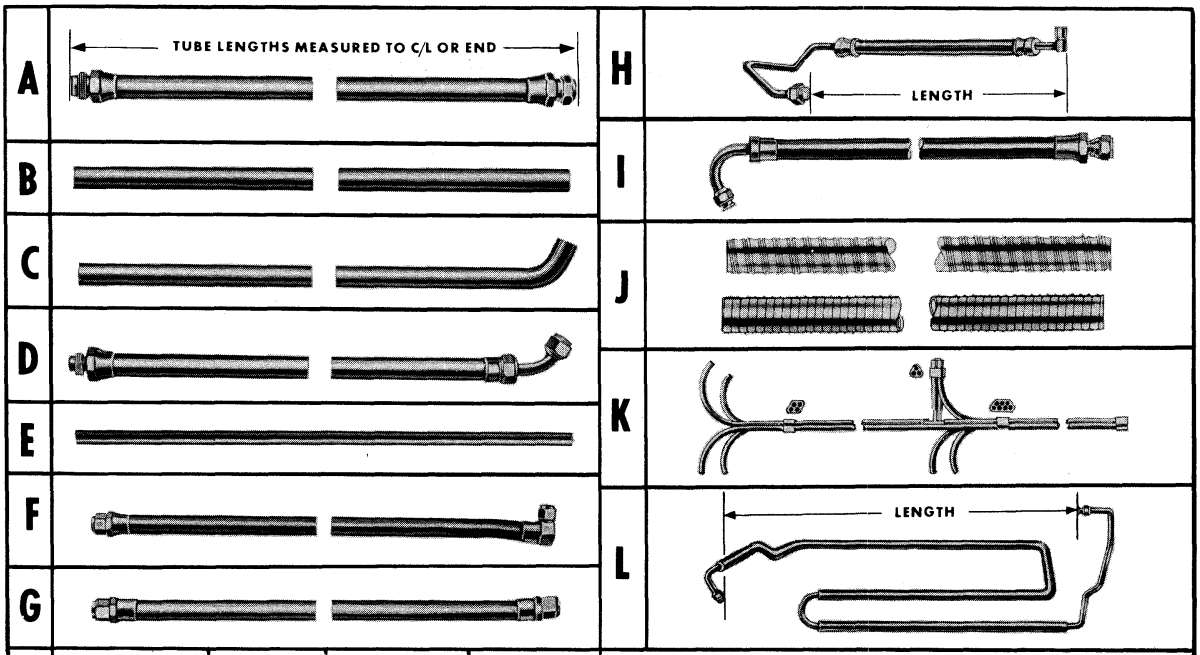


| TYPE | PART NUMBER | LENGTH | HOSE OUTSIDE DIA. | THREAD DIA. | LOCATION |
|---|---|---|---|---|---|
| A | 1627107 | 25 in. | ¾ in. O.D. | ⅝ in.-18 | EXPANSION VALVE TO LIQUID TEE |
| | 1658031 | 36 in. | 1 in. | ⅞ in.-14 | SUCTION TO UNDERBODY TUBE |
| | 1704447 | 94 in. | 1 in. | ⅞ in.-14 | EVAPORATOR TO UNDERBODY SUCTION TUBE |
| | 1885859 | 60 in. | 1 in. | ⅞ in.-14 | SUCTION HOSE UNDERBODY TO TEE |
| | 1887254 | 68½ in. | 1 in. | ⅞ in.-14 | SUCTION EVAPORATOR TO UNDERBODY TUBE |
| | 2096522 | 26 in. | 1 in. | ⅞ in.-14 | COMPRESSOR TO SUCTION TUBE |
| | 2097052 | 80 in. | ¾ in. | ⅝ in.-18 | LIQUID UNDERBODY TO LIQUID TUBE |
| | 2219127 | 18⅞ in. | ⅞ in. | ¾ in.-16 | DISCHARGE HOSE TO MUFFLER |
| B | 1315466 | | | | VALVE TO HEATER AND HEATER TO PUMP (50 FT. ROLL) |
| C | 1595160 | 29 in. | 1 in. | | CONTROL VALVE TO ENGINE |
| | 1779885 | 12 in. | 2½ in. | | HEATER TO ENGINE (INLET AND RETURN) |
| | 1779886 | 41 in. | 2½ in. | | ENGINE TO VALVE |
| | 2096932 | 46 in. | 1 in. | | HEATER TO PUMP (PRE-FORMED) |
| D | 2096839 | 18½ in. | ⅞ in. | ¾ in.-16 | MUFFLER TO DISCHARGE TUBE |
| | 2219048 | 17 in. | ⅞ in. | ¾ in.-16 | MUFFLER TO DISCHARGE TUBE |
| E | 1971676 | 66 in. | ¼ in. | | VACUUM BY-PASS (PLASTIC) |
| F | 1885860 | 68 in. | ¾ in. | ⅝ in.-18 | EXPANSION VALVE TO UNDERBODY TUBE (LIQUID) |
| | 1993669 | 42 in. | ⅝ in. | ⅞ in.-14 | EVAPORATOR TO SUCTION VALVE |
| | 2097180 | 60 in. | ¾ in. | ⅝ in.-18 | TEE TO UNDERBODY TUBE (LIQUID) |
| | 2097200 | 72 in. | ¾ in. | ⅝ in.-18 | TEE TO UNDERBODY TUBE (LIQUID) |
| | 2097202 | 60 in. | 1 in. | ⅞ in.-14 | TEE TO UNDERBODY TUBE (SUCTION) |
| G | 1748269 | 10 in. | ⅜ in. | ¾ in.-16 | DISCHARGE VALVE TO RECEIVER DRIER TUBE (MODEL E) |
| | 1993670 | 9 in. | ⅜ in. | ¾ in.-16 | DISCHARGE VALVE TO RECEIVER DRIER TUBE (MODEL E) |
| | 1993671 | 38 in. | ⅜ in. | ⅝ in.-18 | EXPANSION VALVE TO RECEIVER DRIER (MODEL E) |
| | 2096831 | 18¾ in. | ¾ in. | ⅞ in.-14 | TEE TO EVAPORATOR (SUCTION) (FRONT) |
| | 2096835 | 23 in. | 1 in. | ⅝ in.-18 | RECEIVER DRIER TO EXPANSION VALVE |
| H | 2096838 | 14 in. | ⅞ in. | ¾ in.-16 | CONDENSER TO MUFFLER (DISCHARGE) |
| I | 2097009 | 31½ in. | 1 in. | ⅞ in.-14 | EVAPORATOR TO COMPRESSOR (SUCTION) |
| J | 1689313 | 52 in. | 2¼ in. | | DUCT TO SPOT COOLER |
| | 2096989 | 26 in. | 2¾ in. | | DEFROSTER |
| | 2097121 | 18 in. | 3¼ in. | | AIR OUTLET TO DUCT |
| | 2197020 | 18 in. | 3¼ in. | | AIR OUTLET TO DUCT |
| K | 2097122 | | ¼ in. | | CONTROL TUBE W/TEE AND CONNECTOR (PLASTIC) |
| L | 2096847 | 39½ in. | ⅜ in. | | DRIER TO LIQUID TEE W/FINS (STEEL) |
| | 2219091 | 42¾ in. | ⅜ in. | | DRIER TO LIQUID TUBE |

19x8865

AIR CONDITIONING HOSE CHART



MyMopar.com

# GROUP 24 - AIR CONDITIONING

## 24-01-0 AIR CONDITIONING

| CODE | REMARKS | PER CAR | PLYMOUTH | DODGE | DESOTO | CHRYSLER AND IMPERIAL |
|---|---|---|---|---|---|---|
| 24-01-1 | PACKAGE, Air Conditioning Common, Model "E" | 1 | 2196 337 | 2196 337 | 2196 337 | 2196 337 |
| 24-01-5 | PACKAGE, Adapter, PP2, PD4, w/Eng. Stamped 318 | 1 | 2196 339 | 2196 339 | ---- --- | ---- --- |
| | PP2, PD1, PD2, PD4, PS1, PS3, w/Eng. Stamped 361, 383 | 1 | 2196 347 | 2196 347 | 2196 347 | ---- --- |
| | PP1, PD3 | 1 | 2196 338 | 2196 338 | ---- --- | ---- --- |
| | PC1, PC2, PC3, PY1 | 1 | ---- --- | ---- --- | ---- --- | 2196 349 |
| 24-01-18 | COVER, Heater Core, Eng. Side | 1 | 2096 255 | 2096 255 | 2096 255 | 2096 255 |
| 24-01-24 | CORE, Heater Model 906 | 1 | 1879 904 | 1879 904 | 1879 904 | 1879 904 |
| 24-01-26 | SEAL, Heater Core Tube, Model 906 | 2 | 1604 116 | 1604 116 | 1604 116 | 1604 116 |
| 24-01-33 | RETAINER, Air Outlet, Model 905 | 2 | 1689 670 | 1689 670 | 1689 670 | 1689 670 |
| | Louver Model 905 except PY1 | 4 | ---- --- | ---- --- | ---- --- | 2197 896 |
| 24-01-36 | VALVE, Temperature Control Model 905 except PY1 | 1 | 1972 779 | 1972 779 | 1972 779 | 1972 779 |
| | Model 905 PY1 | 1 | ---- --- | ---- --- | ---- --- | 1972 781 |
| 24-01-48 | CLAMP, Temperature Control Cable, PY1 | 1 | *1971 407 | *1971 407 | *1971 407 | *1971 407 |
| 24-01-65 | CABLE, Temperature Control, includes HOUSING | 1 | 1819 748 | 1819 748 | 1819 748 | 1819 748 |
| 24-01-87 | NIPPLE, Heater Hose Return, w/B. Eng. w/Std Manifold | 1 | 1779 257 | 1779 257 | 1779 257 | 1779 257 |
| | Heater Hose Return, w/A'Eng. Stamped 318 | 1 | 1971 061 | 1971 061 | ---- --- | ---- --- |
| | Heater Hose Inlet, w/B Eng. Stamped 361, 318, 413 | 1 | 1971 061 | 1971 061 | 1971 061 | 1971 061 |

## 24-24-0 CONTROL

| | | | | | | |
|---|---|---|---|---|---|---|
| 24-24-5 | SWITCH, Toggle | 1 | *1886 178 | *1972 596 | *1886 178 | ---- --- |
| | Sub. | 1 | ---- --- | ---- --- | ---- --- | 2084 450 |
| | Fan, Model E | 1 | 1991 571 | 1991 571 | 1991 571 | 1991 571 |
| | Rear Unit except PY1 and Sub., w/Dual Unit | 1 | ---- --- | ---- --- | 2096 782 | 2084 450 |
| | Rear Unit, PY1, w/Dual Unit | 1 | ---- --- | ---- --- | ---- --- | 2084 449 |
| 24-24-7 | FUSE HOLDER, Model E | 1 | 1885 608 | 1885 608 | 1885 608 | 1885 608 |
| 24-24-8 | NUT, Blower Motor Switch Mounting Rear Unit except PY1 | 1 | ---- --- | 1688 542 | ---- --- | 1971 521 |
| 24-24-11 | BLOCK, Fuse, w/Male Terminal Rear Unit Single 4D. Sed. | 1 | ---- --- | ---- --- | ---- --- | 2197 136 |
| 24-24-12 | HOUSING, Blower Motor Switch Rear Unit except PY1 | 1 | ---- --- | ---- --- | ---- --- | 1972 146 |
| | Floor Damper Control except PY1 | 1 | ---- --- | ---- --- | ---- --- | 1972 146 |
| 24-24-20 | KNOB, Blower Motor Switch Rear Unit except PY1 and PD4 | 1 | 1887 591 | 1887 860 | ---- --- | 1887 991 |
| | PD4 | 1 | ---- --- | 2096 309 | ---- --- | ---- --- |
| | Model "E" | 8 | 1991 570 | 1991 570 | 1991 570 | 1991 570 |
| 24-24-85 | BLOCK, Resister, includes BRACKET, PY1 | 1 | 1972 049 | 1972 049 | 1972 049 | 1972 049 |
| 24-24-112 | PACKAGE, Control Bezel, Push Button Type, except PY1 | 1 | ---- --- | ---- --- | ---- --- | 2084 054 |
| 24-24-137 | NUT, Control Switch Mounting Rear Unit Single | 1 | ---- --- | 1972 548 | 1972 548 | 1971 521 |
| | Rear Unit Single PY1 | 1 | ---- --- | ---- --- | ---- --- | 1439 758 |
| | Rear Unit 4 D. Sub. | 2 | 1688 542 | 1688 542 | 1688 542 | ---- --- |
| 24-24-140 | BEZEL, Control, Push Button Type except PY1 Model 905 | 1 | ---- --- | ---- --- | ---- --- | 2084 054 |
| | BEZEL, Blower Switch, Sub. w/Front Unit PD1, PD2, PD4 | 1 | ---- --- | 1972 558 | 1972 558 | ---- --- |
| | BEZEL, Blower Switch Rear Unit, w/Frt. Unit | 1 | ---- --- | ---- --- | 1972 558 | ---- --- |
| 24-24-142 | STUD, Damper Control model 905 except PY1 | 2 | ---- --- | ---- --- | ---- --- | 6010 020 |
| 24-24-150 | SWITCH, Vacuum Push Button Control | 1 | 2096 084 | 2096 084 | 2096 084 | 2096 084 |
| 24-24-156 | KNOB, Temperature Control, except PY1 | 1 | 2096 858 | 2096 865 | 2096 865 | 1972 499 |
| | PY1 | 1 | ---- --- | ---- --- | ---- --- | 1972 218 |



MyMopar.com

| CODE | REMARKS | PER CAR | PLYMOUTH | DODGE | DESOTO | CHRYSLER AND IMPERIAL |
|---|---|---|---|---|---|---|
| **24-24-0 CONTROL - Cont'd** | | | | | | |
| 24-24-158 | SCREW, Vacuum Switch Mounting | 2 | 6006 036 | 6006 036 | 6006 036 | 6006 036 |
| 24-24-159 | PLATE, Temperature Control, includes ARM and SWITCH | | | | | |
| | Model 905 except PY1 | 1 | 2097 730 | 1887 835 | 1887 835 | 2097 100 |
| | Model 905 PY1 | 1 | ---- --- | ---- --- | ---- --- | 1887 453 |
| 24-24-160 | KNOB, Floor Air Damper Control except PD4 and PY1 | 1 | 1887 591 | 1887 860 | 1887 909 | 1887 991 |
| | PD4 | 1 | ---- --- | 2096 309 | ---- --- | ---- --- |
| | PY1 | 1 | ---- --- | ---- --- | ---- --- | 1887 935 |
| 24-24-164 | EXTENSION, Push Button Control includes Cover except PY1, Heat | 1 | ---- --- | ---- --- | ---- --- | 1887 674 |
| | Max Cool | 1 | ---- --- | ---- --- | ---- --- | 1887 672 |
| 24-24-166 | SOCKET, Control Lamp | 1 | 2096 586 | 2097 008 | 2097 008 | 2097 008 |
| 24-24-167 | SOCKET, Control Lamp, includes HOOD and BRACKET, except PY1 | 1 | ---- --- | ---- --- | ---- --- | 2197 001 |
| 24-24-170 | PAD, Push Button Extension, except PY1 | 1 | ---- --- | ---- --- | ---- --- | 2080 388 |
| **24-25-0 COMPRESSOR** | | | | | | |
| NOTE: | For Compressor and Generator Belt see Part Type Code 7-03-1. | | | | | |
| 24-25-2 | PACKAGE, Compressor Piston Ring Replacement | 1 | 2196 301 | 2196 301 | 2196 301 | 2196 301 |
| 24-25-3 | PACKAGE, Compressor Piston and Connecting Rod Replacement | 1 | 1426 500 | 1426 500 | 1426 500 | 1426 500 |
| 24-25-5 | COMPRESSOR | 1 | 1989 773 | 1989 773 | 1989 773 | 1989 773 |
| 24-25-10 | SUPPORT, Compressor | | | | | |
| | Front, w/Eng. Stamped 361, 413 and 383 | 1 | 1947 657 | 1947 657 | 1947 657 | 1947 657 |
| | Right Compressor Head, w/Eng. Stamped 318 | 1 | 1738 414 | 1738 414 | ---- --- | ---- --- |
| | Left Compressor Head, w/Eng. Stamped 318 | 1 | 1738 415 | 1738 415 | ---- --- | ---- --- |
| 24-25-13 | SPACER, Compressor Mtg. to Fan Idler Bracket to Block, w/Eng. Stamped 361, 314, 383 | | *1980 568 | *1980 568 | *1980 568 | *1980 568 |
| 24-25-15 | BRACE, Compressor Steady, w/Eng. Stamped 361, 383 and 413 | 1 | 1852 933 | 1852 933 | 1852 933 | 1858 620 |
| | Except PY1 | 1 | ---- --- | ---- --- | ---- --- | 1947 789 |
| | BRACKET, Compressor Mounting, w/Eng. Stamped 361, 383 and 413 | 1 | 1852 932 | 1852 932 | 1852 932 | ---- --- |
| | BRACKET, Compressor Mtg. w/Eng. Stamped 318 | 1 | *1980 572 | *1980 572 | *1980 572 | ---- --- |
| | w/Eng. Stamped 361, 413, 383 | 1 | *1980 566 | *1980 566 | *1980 566 | ---- --- |
| | | 1 | ---- --- | ---- --- | ---- --- | *1980 576 |
| | Used w/Eng. Stamped 383 and 413 | 1 | ---- --- | ---- --- | ---- --- | 1858 622 |
| | BRACKET, Compressor Side used w/Eng. Stamped 361 and 383 | 1 | 1855 441 | 1855 441 | 1855 441 | 1858 621 |
| | PACKAGE, Compressor Front Bracket, w/Ram Manifold w/Eng. Stamped 361 | 1 | 2240 288 | 2240 288 | 2240 288 | 2240 288 |
| 24-25-16 | BRUSH, Compressor Drive Clutch, includes HOLDER and BRACKET w/7 1/2" O.D. Clutch | 1 | 2097 507 | 2097 507 | 2097 507 | 2097 507 |
| 24-25-17 | CLUTCH, Compressor Drive 7 1/2" O.D. | 1 | 1886 328 | 1886 328 | 1886 328 | 1886 328 |
| 24-25-18 | SHOE, Compressor Clutch, includes HUB, used w/7 1/2" O.D. Clutch | 1 | 2097 996 | 2097 996 | 2097 996 | 2097 996 |
| 24-25-20 | PULLEY, Compressor, Clutch, includes HUB and BEARING, used w/5 1/8" O.D. Clutch | 1 | 2097 106 | 2097 106 | 2097 206 | 2097 106 |
| 24-25-70 | PACKAGE, Compressor Shaft Gas Seal | 1 | 1426 501 | 1426 501 | 1426 501 | 1426 501 |
| 24-25-84 | HEAD, Compressor, Right | 1 | 1738 330 | 1738 330 | 1738 330 | 1738 330 |
| | HEAD, Compressor, Left | 1 | 1738 329 | 1738 329 | 1738 329 | 1738 329 |
| 24-25-85 | SCREW, Compressor Head | 14 | 1730 587 | 1730 587 | 1730 587 | 1730 587 |
| | SCREW, Compressor Sump | 6 | 1730 587 | 1730 587 | 1730 587 | 1730 587 |
| 24-25-93 | PACKAGE, Valve Plate Replacement | 2 | 1734 837 | 1734 837 | 1734 837 | 1734 837 |
| 24-25-94 | GASKET, Valve Plate to Crankcase | 2 | 1378 313 | 1378 313 | 1378 313 | 1378 313 |
| | GASKET, Cylinder Head | 2 | 1377 904 | 1377 904 | 1377 904 | 1377 904 |
| 24-25-95 | PLATE, Valve, includes VALVES | 2 | 1734 837 | 1734 837 | 1734 837 | 1734 837 |
| 24-25-110 | GASKET, Discharge Valve | 1 | 1982 508 | 1982 508 | 1982 508 | 1982 508 |
| | GASKET, Suction Valve | 1 | 1378 081 | 1378 081 | 1378 081 | 1378 081 |



MyMopar.com

| CODE | REMARKS | PER CAR | PLYMOUTH | DODGE | DESOTO | CHRYSLER AND IMPERIAL |
|---|---|---|---|---|---|---|
| **24-25-0 COMPRESSOR - Cont'd** | | | | | | |
| 24-25-114 | SCREEN, Suction | 1 | 1982 507 | 1982 507 | 1982 507 | 1982 507 |
| 24-25-120 | VALVE, Discharge Service, with Left Hand Mtg. Compressor Stamped 1947 497 | 1 | 1986 054 | 1986 054 | 1986 054 | 1986 054 |
| | With Right Hand Mtg. Compressor Stamped 1947 499 | 1 | 1986 053 | 1986 053 | 1986 053 | 1986 053 |
| | w/Compressor Stamped 1990558 | 1 | 1743 634 | 1743 634 | 1743 634 | 1743 634 |
| 24-25-121 | SCREW, Service Valve | ★ | 1747 993 | 1747 993 | 1747 993 | 1747 993 |
| 24-25-122 | VALVE, Compressor Suction, used w/Compressor Stamped 1990558 | 1 | 1993 685 | 1993 685 | 1993 685 | 1993 685 |
| 24-25-127 | CAP, Compressor Suction Valve, 1/4" Flare Model "E" | 1 | *1989 202 | *1989 202 | *1989 202 | *1989 202 |
| | CAP, Compressor Discharge Valve, 1/2" Flare Model "E" | 1 | *1989 208 | *1989 208 | *1989 208 | *1989 208 |
| 24-25-132 | VALVE, Pressure Regulator, with Left Hand Mtg., Compressor Stamped 1947 497 | 1 | 1986 052 | 1986 052 | 1986 052 | 1986 052 |
| | With Right Hand Mtg. Compressor Stamped 1947 499 | 1 | 1986 051 | 1986 051 | 1986 051 | 1986 051 |
| 24-25-133 | CORE, Pressure Regulator Valve | ★ | 1992 947 | 1992 947 | 1992 947 | 1992 947 |
| 24-25-154 | PACKAGE, Compressor Crankshaft | 1 | 2196 304 | 2196 304 | 2196 304 | 2196 304 |
| 24-25-156 | SCREW, Clutch Pulley Mounting, used w/7 1/2" O.D. Clutch | 1 | 1819 843 | 1819 843 | 1819 843 | 1819 843 |
| | Used w/5 1/8" O.D. Clutch | 1 | 1658 638 | 1658 638 | 1658 638 | 1658 638 |
| 24-25-157 | WASHER, Clutch Pulley Mounting, used w/7 1/2" O.D. Clutch | 1 | 1648 240 | 1648 240 | 1648 240 | 1648 240 |
| | Used w/5 1/8" O.D. Clutch | 1 | 2097 102 | 2097 102 | 2097 102 | 2097 102 |
| 24-25-160 | BEARING, Crankshaft, Ball | 1 | 1854 829 | 1854 829 | 1854 829 | 1854 829 |
| 24-25-162 | PACKAGE, Crankshaft Bearing Housing | 1 | 2196 315 | 2196 315 | 2196 315 | 2196 315 |
| 24-25-189 | SEAL, Crankshaft Bearing Housing | 1 | 1377 831 | 1377 831 | 1377 831 | 1377 831 |
| 24-25-219 | BEARING, Compressor Clutch | 1 | 1769 318 | 1769 318 | 1769 318 | 1769 318 |
| 24-25-232 | COIL, Clutch Field, used w/5 1/8" O.D. Clutch | 1 | 2097 105 | 2097 105 | 2097 105 | 2097 105 |
| | Used w/7 1/2" O.D. Clutch | 1 | 2097 995 | 2097 995 | 2097 995 | 2097 995 |
| 24-25-233 | SCREW, Clutch Field Coil Mounting, used w/5 1/8" O.D. Clutch | 3 | 2097 109 | 2097 109 | 2097 109 | 2097 109 |
| 24-25-234 | RING, Compressor Drive Clutch | | | | | |
| | Internal, used w/5 1/8" O.D. Clutch | 1 | 2097 103 | 2097 103 | 2097 103 | 2097 103 |
| | External, used w/5 1/8" O.D. Clutch | 1 | 2097 101 | 2097 101 | 2097 101 | 2097 101 |
| 24-25-235 | PACKAGE, Insulator, Field Coil and Brush Lead | 1 | 1843 226 | 1843 226 | 1843 226 | 1843 226 |
| 24-25-246 | PACKAGE, Oil Pump Replacement | 1 | 2196 306 | 2196 306 | 2196 306 | 2196 306 |
| 24-25-252 | SEAL, Oil Pump Cover | 1 | 1747 988 | 1747 988 | 1747 988 | 1747 988 |
| 24-25-258 | SUMP, Compressor Oil | 1 | *1747 962 | *1747 962 | *1747 962 | *1747 962 |
| 24-25-260 | GASKET, Oil Sump | 1 | 1377 825 | 1377 825 | 1377 825 | 1377 825 |
| **24-26-0 RECEIVER DRIER** | | | | | | |
| 24-26-20 | PACKAGE, Receiver Drier, Model 906 | 1 | 1880 658 | 1880 658 | 1880 658 | 1880 658 |
| | Model "E" | 1 | 1742 766 | 1742 766 | 1742 766 | 1742 766 |
| 24-26-26 | PLUG, Receiver Drier Fusible, Stamped 212, Model "E" | 1 | 1744 767 | 1744 767 | 1744 767 | 1744 767 |
| 24-26-100 | MUFFLER, Compressor, Includes TUBES, w/Eng. Stamped 318 | 1 | 1887 106 | 1887 106 | 1887 106 | ---- --- |
| | Includes TUBES, w/Eng. Stamped 361, 383 and 413 | 1 | 2219 063 | 2219 063 | 2219 063 | 2219 063 |
| **24-27-0 CONDENSER** | | | | | | |
| 24-27-5 | CONDENSER | 1 | 1863 900 | 1863 900 | 1863 900 | 1863 900 |
| | CONDENSER, Model "E" | 1 | 1748 059 | 1748 059 | 1748 059 | 1748 059 |
| **24-28-0 EVAPORATOR UNIT** | | | | | | |
| 24-28-3 | COVER, Quarter Panel Hose and Wiring Upper Right Sub. | 1 | 2168 877 | 2168 877 | 2168 877 | 2168 877 |
| | Upper Left Sub. | 1 | 2168 878 | 2168 878 | 2168 878 | 2168 878 |
| | Lower Right Sub. | 1 | ---- --- | ---- --- | ---- --- | 2168 879 |
| | Lower Left Sub. | 1 | ---- --- | ---- --- | ---- --- | 2168 880 |
| 24-28-4 | CLIP, Drier Actuator Rod | 1 | 6008 145 | 6008 145 | 6008 145 | 6008 145 |
| | By-Pass Door Actuator | 1 | 6008 144 | 6008 144 | 6008 144 | 6008 144 |
| | Deflector Outlet Rod | 1 | 6008 145 | 6008 145 | 6008 145 | 6008 145 |
| | Seal to Hood | 4 | 6010 094 | 6010 094 | 6020 094 | 6010 094 |



MyMopar.com

| CODE | REMARKS | PER CAR | PLYMOUTH | DODGE | DESOTO | CHRYSLER AND IMPERIAL |
|---|---|---|---|---|---|---|
| **24-28-0 EVAPORATOR UNIT - Cont'd** | | | | | | |
| 24-28-5 | UNIT, Evaporator, Model 906 | 1 | 2096 325 | 2096 325 | 2096 325 | 2096 325 |
| | Sub. | 1 | 1886 232 | 1886 232 | 1886 232 | 1886 232 |
| 24-28-9 | NUT, Fresh Air Door Adjusting | 1 | 6008 157 | 6008 157 | 6008 157 | 6008 157 |
| 24-28-19 | GROMMET, Coil Suction Tube Rear Unit | 1 | 1658 766 | 1658 766 | 1658 766 | 1658 766 |
| 24-28-22 | SCREW, Heater Housing Mounting, Model 906 | 14 | 6015 014 | 6015 014 | 6015 014 | 6015 014 |
| 24-28-24 | HOSE, Refrigerant (see chart in front of Group 24) | | | | | |
| | HOSE, Evaporator Drain | 1 | 1971 913 | 1971 913 | 1971 913 | 1971 913 |
| 24-28-25 | HOUSING, Evaporator, includes DAMPER, DOOR and LINKS, Model 905 | 1 | 2096 332 | 2096 332 | 2096 332 | 2096 332 |
| | HOUSING, w/LINKAGE and SEAL | 1 | 2096 259 | 2096 259 | 2096 259 | 2096 259 |
| 24-28-26 | CONNECTOR | 2 | 1748 066 | 1748 066 | 1748 066 | 1748 066 |
| 24-28-36 | PACKAGE, Tubing Sealing Washer Replacement | ★ | 2196 341 | 2196 341 | 2196 341 | 2196 341 |
| 24-28-45 | RETAINER, Fresh Air Damper Hinge Pin | 2 | 6006 079 | 6006 079 | 6006 079 | 6006 079 |
| 24-28-52 | NUT, Roof Rail Upper Cover | 2 | 6006 486 | 6006 486 | 6006 486 | 6006 486 |
| 24-28-60 | COVER, Evaporator Housing, Rear Unit Rear, except Sub. | 1 | 1648 380 | 1648 380 | 1648 380 | 1648 380 |
| 24-28-70 | GRILLE, Air Outlet, Rear Unit, except PY1 and Sub. | 1 | 1887 501 | 1887 501 | 1887 501 | 1887 501 |
| | Rear Unit, PY1 | 1 | ---- --- | ---- --- | ---- --- | 1885 901 |
| 24-28-71 | SCREEN, Inlet Grille, Rear Unit, PY1 | 1 | ---- --- | ---- --- | ---- --- | 1570 956 |
| 24-28-72 | CLIP, Inlet Grille, Rear Unit, except PY1 and Sub. | 4 | 1331 850 | 1331 850 | 1331 850 | 1331 850 |
| 24-28-73 | DUCT, Evaporator Inlet, Rear Unit, except PY1 and Sub. | 1 | 1972 360 | 1972 360 | 1972 360 | 1972 360 |
| | PY1 | 1 | ---- --- | ---- --- | ---- --- | 1648 430 |
| 24-28-75 | BEZEL, Air Outlet, includes ADAPTER, Model 905 | 1 | 1972 996 | ---- --- | ---- --- | ---- --- |
| | Right, except PY1, Model 905 | 1 | ---- --- | ---- --- | ---- --- | 1972 960 |
| | Left, except PY1, Model 905 | 1 | ---- --- | ---- --- | ---- --- | 1972 961 |
| | BEZEL, Air Inlet, Rear Unit, except Sub. and PY1 | 1 | 1819 014 | 1819 014 | 1819 014 | 1819 014 |
| 24-28-76 | RETAINER, Inlet Duct Rear Unit to Shelf, except PY1 and Sub. | 1 | 2097 010 | 2097 010 | 2097 010 | 2097 010 |
| | PY1 | | ---- --- | ---- --- | ---- --- | 1648 460 |
| | Rear Roof Unit, Sub. | 4 | 1689 670 | 1689 670 | 1689 670 | 1689 670 |
| 24-28-78 | GRILLE, Air Outlet, Includes Radio GRILLE, Model 906 | 1 | ---- --- | 2096 070 | 2096 070 | ---- --- |
| | LOUVER, Air Outlet, Includes FRAME, Model 905, PY1 | 2 | 2096 716 | 2096 716 | 2096 716 | 2096 716 |
| | Includes FRAME, Model 905, except PY1 | 4 | ---- --- | ---- --- | ---- --- | *2096 715 |
| | Includes HOUSING, Rear Unit | 2 | 2096 940 | 2096 940 | 2096 940 | 2096 940 |
| | Roof Unit, Sub. | 4 | 1838 380 | 1838 380 | 1838 380 | 1838 380 |
| | ADAPTER, Outlet Louver, includes BRACKET and BEZEL, Rear Unit, Sub. | 4 | 1753 579 | 1753 579 | 1753 579 | 1753 579 |
| | GRILLE, Model "E" | 1 | 1985 565 | 1985 565 | 1985 565 | 1985 565 |
| 24-28-79 | SCREEN, Inlet Grille, Rear Unit, PY1 | 1 | ---- --- | ---- --- | ---- --- | 1570 956 |
| 24-28-90 | DOOR, Fresh Air, includes LINKAGE | 1 | 1830 632 | 1830 632 | 1830 632 | 1830 632 |
| 24-28-91 | NUT, Fresh Air Door Linkage Adjusting | 1 | 6008 157 | 6008 157 | 6008 157 | 6008 157 |
| 24-28-98 | VANE, Air Deflector, Horizontal, Model "E" | 3 | 1985 567 | 1985 567 | 1985 567 | 1985 567 |
| | Air Deflector, Vertical w/LEVER, Model "E" | 4 | 1991 567 | 1991 567 | 1991 567 | 1991 567 |
| | Air Deflector, Vertical Model "E" | 8 | *1991 572 | *1991 572 | *1991 572 | *1991 572 |
| 24-28-132 | TUBE, Distribution Duct to Spot Cooler, Flexible, 2 1/2" x 26", Model 905 | 1 | 2096 989 | 2096 989 | 2096 989 | 1689 313 |
| | Defroster, Flexible, 2 3/4" x 11 1/2", Model 905 | 1 | 1972 124 | 1972 124 | 1972 124 | ---- --- |
| | Air Outlet Flexible, 3 1/4" x 18", Model 905 | 1 | ---- --- | ---- --- | ---- --- | 2197 020 |
| | Air Outlet 3" x 33", PY1 | 1 | 1658 630 | 1658 630 | 1658 630 | 1658 630 |
| 24-28-175 | HOUSING, Blower, Rear Unit, except Sub. | 2 | 1648 394 | 1648 394 | 1648 394 | 1648 394 |
| | Model "E" | 2 | 1991 576 | 1991 576 | 1991 576 | 1991 576 |
| 24-28-176 | SEAL, Distribution Duct Inlet, Model 906 | 1 | 1887 757 | 1887 757 | 1887 757 | 1887 757 |
| 24-28-191 | WASHER, Blower Motor Insulator, Rear Unit | 6 | 6006 065 | 6006 065 | 6006 065 | 6006 065 |

★ Indicates use as required.
⊟ Indicates parts not listed in any previous parts book.
Printed in U.S.A.
Prices and specifications subject to change without notice.
* Indicates change or addition.



MyMopar.com

| CODE | REMARKS | PER CAR | PLYMOUTH | DODGE | DESOTO | CHRYSLER AND IMPERIAL |
|---|---|---|---|---|---|---|
| **24-28-0 EVAPORATOR UNIT - Cont'd** | | | | | | |
| 24-28-195 | MOTOR, Blower, Model 905 | 1 | 1879 579 | 1879 579 | 1879 579 | 1879 579 |
| | Rear Unit, except Sub. | 2 | 1887 401 | 1887 401 | 1887 401 | 1887 401 |
| | Roof Unit, Sub. | 2 | 1886 266 | 1886 266 | 1886 266 | 1886 266 |
| | Model "E" | 1 | 1985 536 | 1985 536 | 1985 536 | 1985 536 |
| 24-28-196 | TERMINAL PACKAGE, Control Panel Lamp, PY1 | 1 | ---- --- | ---- --- | ---- --- | 1843 227 |
| | Except PY1 | 1 | ---- --- | ---- --- | ---- --- | 1843 226 |
| | SOCKET, Control Lamp | 1 | 1689 538 | ---- --- | ---- --- | ---- --- |
| 24-28-197 | INSULATOR, Motor Mtg. | 6 | 117 957 | 117 957 | 117 957 | 117 957 |
| 24-28-199 | BRACKET, Blower Motor Mtg., Model 906 | 1 | 1880 211 | 1880 211 | 1880 211 | 1880 211 |
| 24-28-200 | SPACER, Motor Mtg. Bracket | 3 | 1605 271 | 1605 271 | 1605 271 | 1605 271 |
| 24-28-204 | WASHER, Blower Motor Housing Mounting Rear Unit, except Sub. | 12 | 6006 065 | 6006 065 | 6006 065 | 6006 065 |
| 24-28-210 | WHEEL, Blower, Model 906 | 1 | 1880 842 | 1880 442 | 1880 442 | 1880 442 |
| | Rear Unit, except Sub. | 2 | 1235 644 | 1235 644 | 1235 644 | 1235 644 |
| | Right, Model "E" | 1 | 1985 539 | 1985 539 | 1985 539 | 1985 539 |
| | Left, Model "E" | 1 | 1985 537 | 1985 537 | 1985 537 | 1985 537 |
| 24-28-220 | COIL, Evaporator, includes HOUSING, Model 905 | 1 | 2096 325 | 2096 325 | 2096 325 | 2096 325 |
| | Less Housing, Model 906 | 1 | 2096 253 | 2096 253 | 2096 253 | 2096 253 |
| | Rear Unit, except Sub. | 1 | 1880 642 | 1880 642 | 1880 642 | 1880 642 |
| | Roof Unit, Sub. | 1 | 1886 249 | 1886 249 | 1886 249 | 1886 249 |
| | Model "E" | 1 | 1991 581 | 1991 581 | 1991 581 | 1991 581 |
| 24-28-241 | SWITCH, Thermal, Model "E" | 1 | 1991 566 | 1991 566 | 1991 566 | 1991 566 |
| 24-28-295 | PACKAGE, Distribution Defroster Door | 1 | 2084 295 | 2084 295 | 2084 295 | 2084 295 |
| 24-28-300 | VALVE, Expansion, except Sub. | 1 | 1879 580 | 1879 580 | 1879 580 | 1879 580 |
| | Sub. | 1 | 1887 364 | 1887 364 | 1887 364 | 1887 364 |
| | Model "E" | 1 | 1991 619 | 1991 619 | 1991 619 | 1991 619 |
| 24-28-318 | TEE, Liquid Tube, Rear Unit, w/Dual Unit | 1 | 1885 692 | 1885 692 | 1885 692 | 1885 692 |
| | TEE, Suction Tube, Rear Unit, w/Dual Unit | 1 | 1886 011 | 1886 011 | 1886 011 | 1886 011 |
| | TEE, Control Vacuum Tube, Plastic | 2 | 1886 109 | 1886 109 | 1886 109 | 1886 109 |
| 24-28-322 | INDICATOR PACKAGE, Liquid, includes CAP and GASKET | 1 | 1880 657 | 1880 657 | 1880 657 | 1880 657 |
| | Model "E" | 1 | 1744 768 | 1744 768 | 1744 768 | 1744 768 |
| 24-28-357 | NUT, Damper Control | 1 | 1972 548 | 1972 548 | 1972 548 | 1971 521 |
| 24-28-361 | CLIP, Temperature Control Cable | 1 | 6015 143 | 6015 143 | 6015 143 | 6015 143 |
| 24-28-364 | DUCT, Distribution | 1 | ⊟1972 594 | ⊟1972 594 | ⊟1972 594 | ⊟1972 594 |
| 24-28-366 | ROTARY, Floor Air Damper Control, includes CABLE, Except PY1 | 1 | 2096 109 | 2096 110 | 2096 111 | 2096 112 |
| | PY1 | 1 | ---- --- | ---- --- | ---- --- | 2096 113 |
| 24-28-367 | CLAMP, Defroster Door, PS3 | 1 | 1971 407 | 1971 407 | 1971 407 | 1971 407 |
| 24-28-368 | WASHER, Defroster Door | 1 | 1971 463 | 1971 463 | 1971 463 | 1971 463 |
| 24-28-370 | NOZZLE, Defroster, Left | 1 | ---- --- | 1971 693 | 1971 693 | ---- --- |
| 24-28-378 | NUT, Defroster Door Shaft | 1 | 1829 825 | 1829 825 | 1829 825 | 1829 825 |
| 24-28-379 | OUTLET DOOR PACKAGE, Distribution Duct Defroster | 1 | *2084 295 | *2084 295 | *2084 295 | ---- --- |
| 24-28-382 | BEZEL, Air Damper Control | 1 | ---- --- | 1972 590 | 1972 590 | ---- --- |
| 24-28-384 | COVER, Deflector Lever except RD2 | 1 | ⊟2097 152 | ⊟2097 152 | ⊟2097 152 | ⊟2097 152 |
| 24-28-387 | SPOT COOLER, Model 906 | 1 | ⊟1972 372 | ⊟1972 372 | ⊟1972 372 | ⊟1972 372 |
| **24-29-0 ACTUATOR** | | | | | | |
| 24-29-1 | VACUUM, By-Pass Door, Model 906 | 1 | 1885 824 | 1885 824 | 1885 824 | 1885 824 |
| | Recirculating Door | 1 | 2097 128 | 2097 128 | 2097 128 | 2097 128 |
| | Deflector | 1 | 2197 131 | 2197 131 | 2197 131 | 2197 131 |
| | Defroster | 1 | 2219 090 | 2219 090 | 2219 090 | 2219 090 |
| | Fresh Air Door | 1 | 1879 843 | 1879 843 | 1879 843 | 1879 843 |

★ Indicates use as required.
⊟ Indicates parts not listed in any previous parts book.
* Indicates change or addition.



Printed in U.S.A.
Prices and specifications subject to change without notice.
Dec. 9, 1960 Supersedes April 20, 1960.

MyMopar.com

| CODE | REMARKS | PER CAR | PLYMOUTH | DODGE | DESOTO | CHRYSLER AND IMPERIAL |
|---|---|---|---|---|---|---|

## NOTES


MyMopar.com

# ALPHABETICAL INDEX


| PART NAME | CODE |
|---|---|
| **A** | |
| Absorber, shock | 17-23-3 to 17-23-57 |
| Accelerator pedal | 14-01-1 to 14-01-22 |
| Accelerator pedal return spring | 14-06-1 to 14-06-10 |
| Accelerator pedal to accelerator shaft rod | 14-07-1 to 14-07-18 |
| Accelerator shaft | 14-11-1 to 14-11-48 |
| Actuator | 24-29-1 |
| Actuator, switch | 1-82-41 |
| Adjustor, parking brake | 4-07-1 to 4-07-28 |
| Adjustor, front seat | 23-47-6 to 23-47-457 |
| Air Cleaner, carburetor | 14-29-2 to 14-29-33 |
| Air Cleaner, power brake | 5-113-17 |
| Air conditioning | 24-01-24 to 24-01-87 |
| Air conditioning control | 24-24-5 to 24-24-166 |
| Air intake | 23-61-39 to 23-61-119 |
| Anchor, parking brake shoe | 4-06-1 to 4-06-11 |
| Antenna, radio | 1-88-1 to 1-88-230 |
| Anti-squeak, body | 23-31-33 to 23-31-205 |
| Arm, front wheel lower control | 2-10-6 to 2-10-76 |
| Arm, front wheel upper control | 2-08-5 to 2-08-75 |
| Arm, steering linkage knuckle | 2-05-4 |
| Arm and idler arm, power steering | 19-27-2 to 19-27-55 |
| Arm and idler arm, standard steering gear | 19-27-2 to 19-27-55 |
| Ash receiver | 23-02-1 to 23-02-150 |
| Automatic choke to carburetor rod | 14-65-4 |
| Automatic head lamp dimmer | 1-04-4 to 1-04-19 |
| Automatic lamp door switch | 8-12-2 to 8-12-3 14-02-2 to 14-02-39 |
| Automatic 3 speed transmission | 21-02-1 to 21-02-6 |
| Automatic 3 speed transmission band | 21-136-5 to 21-136-230 |
| Automatic 3 speed transmission button | 21-30-28 to 21-30-394 |
| Automatic 3 speed transmission cable | 21-30-28 to 21-30-394 |
| Automatic 3 speed transmission case | 21-05-1 |
| Automatic 3 speed transmission case extension | 21-04-1 to 21-04-11 |
| Automatic 3 speed transmission | 21-142-12 to 21-142-21 |
| Automatic 3 speed transmission clutch | 21-133-3 to 21-133-71 |
| Automatic 3 speed transmission governor | 21-138-2 to 21-138-38 |
| Automatic 3 speed transmission input shaft | 21-129-5 to 21-129-33 |
| Automatic 3 speed transmission intermediate shaft | 21-129-5 to 21-129-33 |
| Automatic 3 speed transmission kickdown planet pinion carrier and component parts | 21-134-5 to 21-134-51 |
| Automatic 3 speed transmission low and reverse planet pinion carrier and component parts | 21-135-9 to 21-135-50 |
| Automatic 3 speed transmission neutral starter switch | 21-113-24 to 21-113-29 |




MyMopar.com

| PART NAME | CODE |
|---|---|
| Automatic 3 speed transmission oil pan | 21-119-3 to 21-119-19 |
| Automatic 3 speed transmission oil pump | 21-118-1 to 21-118-45 |
| Automatic 3 speed transmission oil pump strainer | 21-117-1 to 21-117-10 |
| Automatic 3 speed transmission output shaft | 21-05-1 to 21-05-35 |
| Automatic 3 speed transmission package | 21-01-3 |
| Automatic 3 speed transmission regulator valve body and valves | 21-131-5 to 21-131-50 |
| Automatic 3 speed transmission servos | 21-137-5 to 21-137-205 |
| Automatic 3 speed transmission set | 21-01-3 |
| Automatic 3 speed transmission speedometer cable, includes shaft and housing | 21-84-1 to 21-84-4 |
| Automatic 3 speed transmission speedometer pinion | 21-85-5 to 21-85-70 |
| Automatic 3 speed transmission torque converter reaction shaft | 21-129-5 to 21-129-33 |
| Automatic 3 speed transmission valve body and valves | 21-139-4 to 21-139-213 |


## B


| | |
|---|---|
| Back-Up lamp | 8-56-1 to 8-56-66 |
| Back-Up lamp | 1-10-1 |
| Band, Automatic 3 speed transmission | 21-136-5 to 21-136-236 |
| Band, parking brake | 4-03-1 to 4-03-11 |
| Band, powerflite transmission | 21-136-5 to 21-136-52 |
| Bar, front bumper face | 13-64-3 to 13-64-152 |
| Bar, radiator upper cross | 7-33-1 to 7-33-4 |
| Bar, rear bumper face | 13-66-3 to 13-66-147 |
| Bar, side sill and belt | 23-51-5 to 23-51-41 |
| Battery and cable | 8-01-4 to 8-01-21 |
| Battery hold-down strap | 13-34-3 |
| Battery hold-down stud | 13-36-5 to 13-33-64 |
| Bearing, camshaft | 9-16-6 to 9-16-17 |
| Bearing, clutch release | 6-19-2 to 6-19-3 |
| Bearing, differential | 3-11-1 to 3-11-14 |
| Bearing, drive pinion | 3-22-24 to 3-22-45 |
| Bearing, drive shaft | 3-33-1 to 3-33-4 |
| Bearing, front wheel | 22-06-1 to 22-06-18 |
| Bearing, propeller shaft center | 16-16-1 to 16-16-47 |
| Bearing, standard transmission countershaft | 21-25-2 to 21-25-6 |
| Bearing, standard transmission main shaft pilot | 21-17-2 to 21-17-7 |
| Bearing, standard transmission main shaft rear | 21-19-2 |
| Belt, fan and related drive | 7-03-1 |
| Bloc, rear spring silent | 17-17-3 to 17-17-5 |
| Block, cylinder | 9-02-5 to 9-02-19 |
| Block, terminal | 8-21-1 to 8-21-11 |
| Block, universal joint cross roller and bearing | 16-09-1 to 16-09-2 |
| | 23-04-4 to 23-04-250 |
| Body, universal joint | 16-04-1 |
| Body, water pump | 7-43-1 to 7-43-5 |
| Body, universal joint | 16-04-1 |
| Body and valves, automatic 3 speed transmission regulator valve | 21-131-5 to 21-131-50 |




MyMopar.com

| PART NAME | CODE |
|---|---|
| Body and Valves, automatic 3 speed transmission valve | 21-139-4 to 21-139-213 |
| Body and Valves, powerflite transmission regulator valve | 21-131-1 to 21-131-50 |
| Body and Valves, powerflite transmission valve | 21-139-4 to 21-139-193 |
| Body anti-squeak | 23-31-33 to 23-31-205 |
| Body bracket | 23-07-168 to 23-07-169 |
| Body bumper | 23-32-14 to 23-32-82 |
| Body door bumper | 23-08-12 to 23-08-60 |
| Body insulator | 23-31-33 to 23-31-205 |
| Body liner | 23-31-33 to 23-31-205 |
| Body pad | 23-31-33 to 23-31-205 |
| Body pan | 23-32-14 to 23-32-82 |
| Body panel | 23-34-16 to 23-34-354 |
| Body plug | 23-32-14 to 23-32-82 |
| Body pillar | 23-36-5 to 23-36-128 |
| Body reinforcement | 23-07-168 to 23-07-169 |
| Body seal | 23-31-33 to 23-31-205 |
| Body striker | 23-08-12 to 23-08-60 |
| Bolt, drive gear | 3-20-1 to 3-20-2 |
| Bolt, rear spring center | 17-14-10 |
| Boot, master cylinder | 5-40-1 to 5-40-3 |
| Boot, wheel cylinder | 5-69-1 |
| Box, glove | 23-06-4 to 23-06-102 |
| Brace, front fender side shield | 12-07-1 to 12-07-3 |
| Bracket, body | 23-07-168 to 23-07-169 |
| Bracket, brake pedal | 5-31-15 |
| Bracket, brake tube | 5-57-2 |
| Bracket, frame engine rear support crossmember | 9-70-9 |
| Bracket, front fender | 12-06-3 |
| Bracket, shock absorber | 17-24-28 |
| Bracket, standard steering column | 19-31-1 to 19-31-24 |
| Brake frame tube | 5-53-3 to 5-53-4 |
| Brake, power | 1-42-1 |
| Brake, parking (foot operated) | 4-25-1 to 4-25-6 |
| Brake drum | 22-04-11 |
| Brake flexible hose | 5-62-1 to 5-62-20 |
| Brake fluid | 5-01-2 |
| Brake hose clip | 5-56-2 |
| Brake pedal | 5-27-1 to 5-27-35 |
| Brake pedal bracket | 5-31-15 |
| Brake pedal pad | 5-28-8 |
| Brake pedal return spring | 5-34-1 |
| Brake pedal shaft | 5-29-1 |
| Brake tube bracket | 5-57-2 |
| Brake tube clip | 5-56-2 |
| Brake tube tee | 5-58-1 |
| Bulb | 8-44-1 |
| Bumper, body | 23-32-14 to 23-32-82 |
| Bumper, body door | 23-08-12 to 23-08-60 |
| Bumper, hood | 15-09-4 to 15-09-22 |
| Bumper, rear spring | 17-19-3 to 17-19-20 |
| Bumper guard | 13-68-6 to 13-68-18 |
| Bumper jack and handle | 13-72-1 to 13-72-2 |
| Bushing and Roller, universal joint cross | 16-10-1 to 16-10-3 |
| Button, automatic 3 speed transmission | 21-30-28 to 21-30-394 |
| Button, universal joint centering | 16-06-1 to 16-06-3 |
| Button and Cable, powerflite transmission gearshift | 21-30-28 to 21-30-394 |




MyMopar.com

| PART NAME | CODE |
|---|---|
| **C** | |
| Cable, automatic 3 speed transmission | 21-30-28 to 21-30-394 |
| Cable, parking brake control | 4-23-1 to 4-23-51 |
| Cable, speedometer, automatic 3 speed transmission, includes shaft and housing | 21-84-1 to 21-84-4 |
| Cable, speedometer, powerflite transmission, includes shaft and housing | 21-84-1 to 21-84-4 |
| Cable, speedometer, standard transmission, includes shaft and housing | 21-84-1 to 21-84-4 |
| Cable and battery | 8-01-4 to 8-01-21 |
| Cable and Button, powerflite transmission gearshift | 21-30-28 to 21-30-394 |
| Cable and connection | 8-16-1 to 8-16-8 |
| Camshaft | 9-15-1 to 9-15-10 |
| Camshaft bearing | 9-16-6 to 9-16-17 |
| Camshaft sprocket | 9-17-5 to 9-17-13 |
| Cap, crankshaft bearing | 9-10-2 to 9-10-22 |
| Cap, fuel tank locking | 1-39-2 to 1-39-7 |
| Cap, hub | 22-08-5 to 22-08-57 |
| Cap, radiator filler | 7-12-1 |
| Carburetor | 14-30-1 |
| Carburetor air cleaner | 14-29-2 to 14-29-33 |
| Carrier, space wheel | 22-20-80 to 22-20-89 |
| Carrier and component parts, Automatic 3 speed transmission kickdown planet pinion | 21-134-5 to 21-134-51 |
| Carrier and component parts, Automatic 3 speed transmission low and reverse planet pinion | 21-135-9 to 21-135-50 |
| Carrier and component parts, powerflite transmission kickdown planet pinion | 21-134-5 to 21-134-40 |
| Carrier and component parts, powerflite transmission reverse planet pinion | 21-135-5 to 21-135-35 |
| Carrier and differential, rear axle | 3-03-1 to 3-03-31 |
| Case, automatic 3 speed transmission | 21-03-1 |
| Case, differential | 3-04-6 to 3-04-10 |
| Case, powerflite transmission | 21-03-1 to 21-03-45 |
| Case, standard transmission | 21-03-1 to 21-03-2 |
| Chain, timing | 9-20-1 |
| Chain case cover | 9-23-5 to 9-23-40 |
| Chain case cover plate | 9-24-5 to 9-24-7 |
| Channel, glass | 23-09-2 to 23-09-67 |
| Chassis and body wiring | 8-15-2 to 8-15-6 |
| Check, door | 23-10-1 to 23-10-17 |
| Cigar lighter | 8-20-3 to 8-20-20 |
| Cigar lighter package | 1-12-1 |
| Clamp, power brake hose | 5-112-1 |
| Cleaner, carburetor air | 14-29-2 to 14-29-33 |
| Clip, brake tube | 5-56-2 |
| Clip, rear spring | 17-15-1 to 17-15-28 |
| Clock | 1-21-1 to 1-21-25 |
| Clutch | 6-01-3 |
| Clutch, automatic 3 speed transmission | 21-133-3 to 21-133-71 |




MyMopar.com

| PART NAME | CODE |
|---|---|
| Clutch, powerflite transmission direct | 21-133-5 to 21-133-43 |
| Clutch cover and pressure plate | 6-14-1 to 6-14-10 |
| Clutch disc | 6-13-1 to 6-13-8 |
| Clutch housing | 6-09-1 to 6-09-11 |
| Clutch housing pan | 6-10-2 to 6-10-10 |
| Clutch parts, rear axle differential | 3-09-1 to 3-09-2 |
| Clutch pedal | 6-38-1 to 6-38-26 |
| Clutch pedal pad | 6-39-2 |
| Clutch pedal rod | 6-50-1 to 6-50-12 |
| Clutch pressure plate | 6-15-1 |
| Clutch pressure spring | 6-16-1 |
| Clutch release bearing | 6-19-2 to 6-19-3 |
| Clutch release bearing pull-back spring | 6-20-14 |
| Clutch release fork | 6-22-1 to 6-22-19 |
| Clutch release fork pull-back spring | 6-27-5 |
| Clutch release fork rod | 6-24-1 to 6-24-6 |
| Clutch release fork seal | 6-23-3 |
| Clutch release lever | 6-17-3 |
| Clutch release overcenter spring | 6-35-1 to 6-35-19 |
| Clutch torque shaft | 6-52-1 to 6-52-15 |
| Coil, ignition | 8-35-4 to 8-35-122 |
| Component Parts, generator | 8-29-1 to 8-29-327 |
| Component parts and carrier, Automatic 3 speed transmission low and reverse planet pinion | 21-135-9 to 21-135-50 |
| Component parts and carrier, Automatic 3 speed transmission kickdown planet pinion | 21-134-5 to 21-134-51 |
| Component parts and carrier, Powerflite transmission kickdown planet | 21-134-5 to 21-134-40 |
| Component parts and hot water heater | 1-48-1 to 1-48-707 |
| Compressor | 24-25-2 to 24-25-260 |
| Condenser | 24-27-5 |
| Conditioning, Air | 24-01-24 to 24-01-87 |
| Connecting rod | 9-31-4 to 9-31-10 |
| Connecting rod bearing package | 9-32-2 |
| Connection and cable | 8-16-1 to 8-16-8 |
| Connector, power brake tube | 5-110-18 |
| Console, floor tunnel | 23-38-5 to 23-38-15 |
| Control, air conditioning | 24-24-5 to 24-24-166 |
| Control, door lock and remote | 23-18-5 to 23-18-120 |
| Control, hood lock | 15-14-1 to 15-14-20 |
| Control, horn | 8-33-4 to 8-33-164 |
| Converter, torque | 9-46-4 to 9-46-229 |
| Core, radiator | 7-11-3 |
| Countershaft, standard transmission | 21-24-2 to 21-24-22 |
| Courtesy lamp | 8-11-6 to 8-11-12 |
| Courtesy lamp rear pocket switch | 8-11-6 |
| Cover, chain case | 9-23-5 to 9-23-40 |
| Cover, standard steering gear housing | 19-04-1 to 19-04-13 |
| Cover, tire | 1-116-2 |
| Cover, universal joint dust | 16-07-3 to 16-07-4 |
| Cover, valve spring | 9-40-1 to 9-40-18 |
| Cover, valve tappet | 9-40-1 to 9-40-18 |
| Cowl vent | 23-61-39 to 23-6-119 |
| Crankcase breather pipe | 10-01-21 |
| Crankcase ventilator | 10-02-8 to 10-02-15 |




MyMopar.com

| PART NAME | CODE |
|---|---|
| Crankshaft | 9-07-5 to 9-07-22 |
| Crankshaft bearing cap | 9-10-2 to 9-10-19 |
| Crankshaft bearing package | 9-09-2 |
| Crankshaft rear bearing oil seal | 9-11-1 to 9-11-7 |
| Crankshaft sprocket | 9-08-5 |
| Crankshaft vibration damper | 9-13-5 |
| Cross, universal joint | 16-08-6 to 16-08-7 |
| Crossmember, frame engine rear support | 9-69-4 to 9-69-6 |
| Crossmember, frame front | 13-11-5 |
| Crossmember, frame rear | 13-18-4 to 13-18-32 |
| Cup, master cylinder piston | 5-45-8 |
| Cup, wheel cylinder piston | 5-71-1 to 5-71-2 |
| Cylinder, master | 5-39-1 to 5-39-24 |
| Cylinder, power steering gear | 19-55-1 |
| Cylinder, wheel brake | 5-64-1 to 5-64-2 |
| Cylinder and keys, lock | 23-17-2 23-17-72 |
| Cylinder block | 9-02-7 to 9-02-16 |
| Cylinder head | 9-03-4 to 9-03-29 |
| Cylinder head water outlet elbow | 9-05-5 to 9-05-6 |


## D


| PART NAME | CODE |
|---|---|
| Damper crankshaft vibration | 9-13-5 |
| Deck Lid | 23-19-8 to 23-19-185 |
| Deck lid tire cover package | 1-02-1 |
| Deflector, fuel tank stone | 14-87-2 |
| Deflector, radiator stone | 7-35-2 to 7-35-21 |
| Differential and carrier, rear axle | 3-03-1 to 3-03-31 |
| Differential bearing | 3-11-1 to 3-11-14 |
| Differential case | 3-04-6 to 3-04-10 |
| Differential pinion | 3-07-1 to 3-07-2 |
| Differential pinion shaft | 3-08-1 to 3-08-2 |
| Differential side gear | 3-06-5 to 3-06-8 |
| Dimmer, automatic head lamp | 1-04-4 to 1-04-19 |
| Directional lamp | 8-50-82 to 8-50-351 |
| Directional signal cancelling switch | 8-50-125 |
| Directional signal lamp | 8-55-1 to 8-55-230 |
| Directional switch | 8-50-82 |
| Disc, clutch | 6-13-1 to 6-13-8 |
| Distributor | 8-27-1 to 8-27-316 |
| Dome lamp | 8-05-2 to 8-05-32 |
| Door | 23-11-1 to 23-11-23 |
| Door check | 23-10-1 to 23-10-17 |
| Door hinge | 23-15-1 to 23-15-22 |
| Door lock and remote control | 23-18-5 to 23-18-120 |
| Door regulator | 23-14-10 to 23-14-153 |
| Door remote control handle | 23-14-10 to 23-14-150 |
| Drain cock, radiator | 7-13-2 |
| Drain trough | 23-59-25 to 23-59-61 |
| Drain trough moulding | 23-59-37 to 23-59-61 |
| Drier, receiver | 24-26-20 to 24-26-100 |
| Drive gear and pinion set | 3-19-1 |
| Drive gear bolt | 3-20-1 to 3-20-2 |
| Drive pinion bearing | 3-22-24 to 3-22-45 |




MyMopar.com

| PART NAME | CODE |
|---|---|
| Drive shaft | 3-32-1 to 3-32-9 |
| Drive shaft bearing | 3-33-1 to 3-33-4 |
| Drive shaft oil seal | 3-35-14 |
| Drum, brake | 22-04-11 |
| Drum, hub and brake | 22-03-1 to 22-03-2 |
| Drum, parking brake | 4-01-1 |

## E

| | |
|---|---|
| Elbow, cylinder head water outlet | 9-05-5 to 9-05-6 |
| Engine | 9-01-5 to 9-01-24 |
| Engine front support | 9-64-5 |
| Engine front support insulator | 9-67-4 |
| Engine rear support insulator | 9-71-5 to 9-71-19 |
| Evaporator unit | 24-28-3 to 24-28-382 |
| Exhaust pipe | 11-05-1 to 11-05-12 |
| Exhaust pipe flange, gasket and stud | 11-06-2 to 11-06-8 |
| Exhaust pipe support and clamp | 11-08-1 to 11-08-24 |
| Exhaust valve | 9-39-6 to 9-39-17 |
| Expander, wheel cylinder piston cup | 5-72-1 |
| Extension, automatic 3 speed transmission case | 21-04-1 to 21-04-11 |
| Extension, powerflite transmission case | 21-04-1 to 21-04-2 |
| Extension, standard transmission | 21-04-1 to 21-04-12 |

## F

| | |
|---|---|
| Fan | 7-02-1 to 7-02-16 |
| Fan and related drive belt | 7-03-1 |
| Fan belt idler pulley | 7-04-1 to 7-04-16 |
| Fan drive and driven pulley | 7-06-1 to 7-06-14 |
| Fan fluid drive unit | 7-07-1 |
| Fan pulley hub | 7-05-1 |
| Fender, front | 12-01-5 to 12-01-105 |
| Filter, fuel | 14-67-1 to 14-67-26 |
| | 10-26-5 to 10-26-65 |
| Flange, propeller shaft | 16-20-1 to 16-20-3 |
| Floor board | 23-04-4 to 23-04-250 |
| Floor mat | 23-20-8 to 23-20-65 |
| Floor tunnel console | 23-38-5 to 23-38-15 |
| Fluid, brake | 5-01-2 |
| Flywheel | 9-45-1 to 9-45-7 |
| Folding top | 23-58-3 to 23-58-607 |
| Foot dimmer switch | 8-53-150 |
| Fork, clutch release | 6-22-1 to 6-22-19 |
| Fork, standard transmission gearshift | 21-39-3 |
| Fork and rail, standard transmission overdrive shifting | 21-66-2 to 21-66-45 |
| Frame | 13-01-1 |
| Frame engine rear support crossmember | 9-69-4 to 9-69-6 |
| Frame engine rear support crossmember bracket | 9-70-9 |
| Frame front crossmember | 13-11-5 |
| Frame rear crossmember | 13-18-4 to 13-18-32 |
| Frame rear spring hanger | 13-54-4 to 13-54-15 |
| Front bumper face bar | 13-64-3 to 13-64-152 |
| Front door switch | 8-12-2 |
| Front fender | 12-01-5 to 12-01-105 |
| Front fender bracket | 12-06-3 |
| Front Fender liner | 12-02-5 |
| Front fender moulding package | 12-15-2 to 12-15-27 |
| Front fender plate | 12-04-4 to 12-04-33 |




MyMopar.com

| PART NAME | CODE |
|---|---|
| Front fender shield | 12-04-4 to 12-04-33 |
| Front fender side shield brace | 12-07-1 to 12-07-3 |
| Front seat | 23-45-55 |
| Front suspension repair package | 2-15-4 |
| Front suspension torsion parts | 2-14-3 to 2-14-15 |
| Front wheel bearing | 22-06-1 to 22-06-18 |
| Front wheel lower control arm | 2-10-6 to 2-10-76 |
| Front wheel upper control arm | 2-08-5 to 2-08-75 |
| Fuel filter | 14-67-1 to 14-67-26 |
| Fuel line tube | 14-89-2 to 14-89-57 |
| Fuel line tube clip | 14-90-1 |
| Fuel pump | 14-73-1 |
| Fuel pump mounting | 14-74-1 to 14-74-2 |
| Fuel pump push rod | 14-77-17 |
| Fuel tank | 14-86-1 to 14-86-85 |
| Fuel tank dust shield | 14-87-2 |
| Fuel tank gauge | 14-72-1 to 14-72-47 |
| Fuel tank locking cap | 1-39-2 to 1-39-7 |
| Fuel tank stone deflector | 14-87-2 |
| Fuel tank support | 14-88-21 to 14-88-27 |

## G

| | |
|---|---|
| Garnish, moulding | 23-22-7 to 23-22-160 |
| Gasket, manifold | 9-50-1 to 9-50-6 |
| Gasket, water pump | 7-44-3 to 7-44-4 |
| Gasket and stud, exhaust pipe flange | 11-06-2 to 11-06-8 |
| Gauge, fuel tank | 14-72-1 to 14-72-47 |
| Gear, differential side | 3-06-5 to 3-06-8 |
| Gear, oil pump and distributor drive | 10-10-1 |
| Gear, power steering | 19-01-8 to 19-01-62 |
| Gear, standard steering | 19-01-3 to 19-01-24 |
| Gear, standard transmission | 21-10-4 to 21-10-16 |
| Gear, standard transmission clutch | 21-14-1 to 21-14-20 |
| Gear, standard transmission countershaft | 21-15-2 to 21-15-33 |
| Gear, standard transmission overGear, standard transmission reverse idler | 21-11-1 to 21-11-9 |
| Gearshift, standard transmission remote control | 21-42-11 to 21-42-43 |
| Gear and pinion, standard transmission speedometer | 21-85-4 to 21-85-76 |
| Generator | 8-28-3 to 8-28-302 |
| Generator component parts | 8-29-1 to 8-29-327 |
| Glass channel | 23-09-2 to 23-09-69 |
| Glove box | 23-06-4 to 23-06-102 |
| Glove compartment light | 1-19-1 to 8-38-4 |
| Governor | 14-68-3 to 14-68-8 |
| Governor, automatic 3 speed transmission | 21-138-2 to 21-138-38 |
| Governor, powerflite transmission | 21-138-2 to 21-138-38 |
| Grille, radiator | 7-16-1 to 7-16-84 |
| Grommet | 8-30-1 |
| Guard, bumper | 13-68-6 to 13-68-18 |
| Guide, seat | 23-47-6 to 23-47-456 |
| Guide, wheel brake shoe | 5-26-1 to 5-26-4 |




MyMopar.com

| PART NAME | CODE |
|---|---|
| **H** | |
| Hand brake signal lamp | 1-09-1 |
| | 8-31-2 to 8-31-23 |
| Handle, door remote control | 23-14-10 to 23-14-153 |
| Handle, Jack | 13-72-2 |
| Hanger, frame rear spring | 13-54-4 to 13-54-15 |
| Head, cylinder | 9-03-4 to 9-03-37 |
| Head rest | 1-16-1 |
| Headlamp | 8-34-1 to 8-34-320 |
| Headlamp beam indicator light | 8-39-3 to 8-39-15 |
| Headlamp switch | 8-53-270 |
| Hinge, door | 23-15-1 to 23-15-22 |
| Hinge, hood | 15-19-2 |
| Hood bumper | 15-09-4 to 15-09-22 |
| Hood hinge | 15-19-2 to 15-19-21 |
| Hood letters | 15-06-3 to 15-06-17 |
| Hood lock | 15-11-3 to 15-11-64 |
| Hood lock control | 15-14-1 to 15-14-20 |
| Hood lock striker | 15-13-2 to 15-13-9 |
| Hood medallion | 15-06-3 to 15-06-17 |
| Hood moulding | 15-25-2 |
| Hood name plate | 15-06-3 to 15-06-17 |
| Hood top panel | 15-03-3 to 15-03-30, 15-28-1 to 15-28-18 |
| Horn | 8-32-2 to 8-32-108 |
| Horn blowing switch | 8-33-90 |
| Horn control | 8-33-4 to 8-33-164 |
| Hose, brake flexible | 5-62-1 to 5-62-20 |
| Hose, power brake vacuum | 5-111-17 |
| Hose, power steering gear | 19-58-7 to 19-58-31 |
| Hose, radiator | 7-14-4 to 7-14-10 |
| Hot water heater and component parts | 1-48-1 to 1-48-707 |
| Housing, clutch | 6-09-1 to 6-09-11 |
| Housing, power steering gear | 19-02-4 to 19-02-69 |
| Housing, propeller shaft center bearing | 16-17-1 |
| Housing, rear axle | 3-02-1 to 3-02-20 |
| Housing, standard steering gear | 19-02-4 to 19-02-21 |
| Housing, standard transmission gearshift | 21-29-3 to 21-29-37 |
| Housing, water pump | 7-43-1 to 7-43-5 |
| Housing and shaft automatic 3 speed transmission speedometer cable, includes | 21-84-1 to 21-84-4 |
| Housing and shaft, powerflite transmission speedometer cable includes | 21-84-1 to 21-84-4 |
| Housing and shaft, standard transmission speedometer cable, includes | 21-84-1 to 21-84-4 |
| Hub, fan pulley | 7-05-1 |
| Hub, wheel | 22-05-14 to 22-05-24 |
| Hub and brake drum | 22-03-1 to 22-03-2 |
| Hub cap | 22-08-5 to 22-08-57 |




MyMopar.com

| PART NAME | CODE |
|---|---|
| **I** | |
| Ignition | 8-36-1 to 8-36-137 |
| Ignition coil | 8-35-4 to 8-35-122 |
| Ignition lamp | 8-40-8 to 8-40-16 |
| Ignition switch | 8-35-59 |
| Ignition switch and lock cylinder | 8-35-4 to 8-35-122 |
| Ignition wiring | 8-36-1 to 8-36-127 |
| Impeller and shaft, water pump | 7-45-2 to 7-45-31 |
| Indicator, oil level | 10-03-4 to 10-03-7 |
| Instrument panel | 23-33-10 to 23-33-227 |
| Instrument panel instruments | 8-37-1 to 8-37-517 |
| Instrument panel light | 8-41-36 |
| Instrument panel wiring | 8-19-64 |
| Instruments, instrument panel | 8-37-1 to 8-37-517 |
| Insulator, body | 23-31-33 to 23-31-205 |
| Insulator, engine front support | 9-67-4 |
| Insulator, engine rear support | 9-71-5 to 9-71-19 |
| Intake, air | 23-61-39 to 23-61-119 |
| Intake valve | 9-39-1 to 9-39-5 |
| Internal parts and housing, standard transmission overdrive unit | 21-51-4 to 21-51-20 |
| **J** | |
| Jack | 13-72-1 |
| Jack Handle | 13-72-2 |
| Jacket, power steering column | 19-31-1 to 19-31-24 |
| Jacket, power steering gear column | 19-14-1 to 19-14-72 |
| Jacket, standard steering gear column | 19-14-1 to 19-14-77 |
| Joint, throttle linkage ball | 14-13-1 to 14-13-5 |
| Joint, universal | 16-03-1 to 16-03-20 |
| **K** | |
| Keys and cylinder, lock | 23-17-2 to 23-17-72 |
| Knuckle, steering | 2-03-3 |
| **L** | |
| Lamp, back-up | 8-56-1 to 8-56-66 |
| Lamp, courtesy | 8-11-6 to 8-11-12 |
| Lamp, directional | 8-50-82 to 8-50-351 |
| Lamp, dome | 8-05-2 to 8-95-32 |
| Lamp, hand brake signal | 1-09-1 8-31-2 to 8-31-23 |
| Lamp, ignition | 8-40-8 to 8-40-16 |
| Lamp, license plate | 8-57-10 to 8-57-79 |
| Lamp, map | 8-42-2 to 8-42-31 |
| Lamp, parking | 8-50-82 to 8-50-351 |
| Lamp, quarter | 8-11-6 to 8-11-12 |
| Lamp, quarter panel ornament | 8-06-1 to 8-06-2 |
| Lamp, stop | 8-58-60 |
| Lamp, tail and stop | 8-55-1 to 8-55-230 |
| Lamp, trunk | 8-13-1 to 8-13-19 |
| Leaf, rear spring | 17-12-4 to 17-12-12 |
| Letters, hood | 15-06-3 to 15-06-17 |
| Lever, automatic 3 speed transmission control | 21-142-12 to 21-142-21 |




MyMopar.com

| PART NAME | CODE |
|---|---|
| Lever, automatic 3 speed transmission gearshift | 21-30-28 to 21-30-394 |
| Lever, clutch release | 6-17-3 |
| Lever, parking brake operating | 4-26-1 to 4-26-23 |
| Lever, powerflite transmission control | 21-142-12 to 21-142-21 |
| Lever, powerflite transmission gearshift | 21-30-28 to 21-30-394 |
| Lever, standard transmission gearshift | 21-30-2 to 21-30-107 |
| License mounting parts | 8-47-8 to 8-47-131 |
| License plate lamp | 8-57-10 to 8-57-79 |
| Lid, deck | 23-19-8 to 23-19-185 |
| Lift, window (electric) | 23-41-4 to 23-41-261 |
| Lift, window (manual) | 23-39-2 to 23-39-53 |
| Light, glove compartment | 1-19-1 |
| Light, headlamp beam indicator | 8-39-3 to 8-39-15 |
| Light, instrument panel | 8-41-36 |
| Light, trunk compartment | 1-30-1 |
| Light, underhood | 1-13-1 to 1-13-10 |
| | 1-13-9 |
| Light, warning | 1-06-1 to 1-06-2 |
| Lighter, cigar | 8-20-3 to 8-20-20 |
| Liner, body | 23-31-33 to 23-31-205 |
| Liner, front fender | 12-02-5 |
| Lining, wheel brake | 5-03-1 to 5-03-23 |
| Lock, hood | 15-11-3 to 15-11-64 |
| Lock cylinder and keys | 23-17-2 to 23-17-72 |
| Lock cylinder and switch, ignition | 8-35-4 to 8-35-122 |
| Low oil pressure switch | 8-53-327 |

## M

| PART NAME | CODE |
|---|---|
| Manifold | 9-48-6 to 9-48-152 |
| Manifold gasket | 9-50-1 to 9-50-6 |
| Manifold heat control valve | 9-59-13 to 9-59-15 |
| Manifold heat control valve stop | 9-62-1 |
| Manifold heat control valve thermostat | 9-58-1 to 9-58-14 |
| Map lamp | 8-42-25 |
| Map lamp switch | 8-42-25 |
| Master cylinder | 5-39-1 to 5-39-24 |
| Master cylinder boot | 5-40-1 to 5-40-3 |
| Master cylinder brake tube | 5-52-3 to 5-52-62 |
| Master cylinder piston | 5-44-3 to 5-44-8 |
| Master cylinder piston cup | 5-45-8 |
| Master cylinder piston push rod | 5-47-2 to 5-47-10 |
| Master cylinder piston return spring | 5-46-1 |
| Master cylinder reinforcement | 5-42-1 |
| Master cylinder valve | 5-43-1 to 5-43-5 |
| Mat, floor | 23-20-8 to 23-20-65 |
| Medallion, hood | 15-06-3 to 15-06-17 |
| Medallion, radiator | 7-17-1 to 7-17-11 |
| Mirror | 1-76-1 to 1-76-24 |
| | 23-21-8 to 23-21-74 |
| Motor, starting | 8-52-4 to 8-52-387 |
| Motor driven radio antenna switch | 1-88-205 |
| Moulding, drain trough | 23-59-37 to 23-59-61 |
| Moulding, garnish | 23-22-7 to 23-22-160 |
| Moulding, hood | 15-25-2 |




MyMopar.com

| PART NAME | CODE |
|---|---|
| Moulding, outside finish | 23-23-2 to 23-23-86 |
| Moulding, trim finish | 23-26-2 to 23-26-89 |
| Mounting, fuel pump | 14-74-1 to 14-74-2 |
| Mounting parts, license | 8-47-8 to 8-47-131 |
| Muffler | 11-01-1 |
| Muffler support | 11-02-1 to 11-02-4 |

## N

| | |
|---|---|
| Nipple, water pump by-pass | 7-48-22 |

## O

| | |
|---|---|
| Oil filter | 10-26-5 to 10-26-65 |
| Oil level indicator | 10-03-4 to 10-03-7 |
| Oil pan | 10-24-1 to 10-24-38 |
| | 10-22-11 to 10-22-41 |
| | 10-07-2 to 10-07-12 |
| Oil pump and distributor drive gear | 10-10-1 |
| Oil pump drive shaft | 10-09-1 to 10-09-7 |
| Oil pump outlet pipe | 10-16-4 |
| Oil pump rotor | 10-14-18 to 10-14-19 |
| Oil strainer | 10-23-7 |
| Outside finish moulding | 23-23-2 to 23-23-86 |

## P

| | |
|---|---|
| Package, automatic 3 speed transmission | 21-01-3 |
| Package, cigar lighter | 1-12-1 |
| Package, connecting rod bearing | 9-32-2 |
| Package, crankshaft bearing | 9-09-2 |
| Package, deck lid tire cover | 1-02-1 |
| Package, Front Fender moulding | 12-15-2 to 12-15-27 |
| Package, front fender name plate | 12-15-2 to 12-15-27 |
| Package, front suspension repair | 2-15-4 |
| Package, powerflite transmission | 21-01-3 |
| Package, standard transmission | 21-01-3 |
| Package, wheel cylinder | 5-63-1 to 5-63-3 |
| Pad, body | 23-31-33 to 23-31-205 |
| Pad, brake pedal | 5-28-8 |
| Pad, clutch pedal | 6-39-2 |
| Pan, automatic 3 speed transmission oil | 21-119-3 to 21-119-19 |
| Pan, body | 23-32-14 to 23-32-82 |
| Pan, clutch housing | 6-10-2 to 6-10-10 |
| Pan, oil | 10-24-1 to 10-24-38 |
| Pan, powerflite transmission oil | 21-119-3 to 21-119-19 |
| Panel, body | 23-34-20 to 23-34-354 |
| Panel, hood top | 15-03-3 to 15-03-30 |
| Panel, instrument | 23-33-10 to 23-33-227 |
| Parking brake (foot operated) | 4-25-1 to 4-25-6 |
| Parking brake adjuster | 4-07-1 to 4-07-28 |
| Parking brake band | 4-03-1 to 4-03-11 |
| Parking brake control cable | 4-23-1 to 4-23-51 |
| Parking brake drum | 4-01-1 |
| Parking brake operating lever | 4-26-1 to 4-26-23 |
| Parking brake shoe anchor | 4-06-1 to 4-06-11 |
| Parking brake support | 4-29-1 to 4-29-16 |
| Parking lamp | 8-50-82 to 8-50-351 |
| Parts, front suspension torsion | 2-14-3 to 2-14-15 |
| Parts, fuel line tube attaching | 14-90-1 |
| Pedal, accelerator | 14-01-1 to 14-01-22 |




MyMopar.com

| PART NAME | CODE |
|---|---|
| Pedal, brake | 5-27-1 to 5-27-35 |
| Pedal, clutch | 6-38-1 to 6-38-26 |
| Pillar, body | 23-36-5 to 23-36-128 |
| Pilot, automatic | 14-02-2 to 14-02-39 |
| Pin, piston | 9-36-5 to 9-36-7 |
| Pinion, automatic 3 speed transmission speedometer | 21-85-5 to 21-85-76 |
| Pinion, differential | 3-07-1 to 3-07-2 |
| Pinion, powerflite transmission speedometer | 21-85-5 to 21-85-76 |
| Pinion, standard transmission main drive | 21-09-2 to 21-09-33 |
| Pipe, crankcase breather | 10-01-21 |
| Pipe, exhaust | 11-05-1 to 11-05-12 |
| Pipe, oil pump outlet | 10-16-4 |
| Pipe, tail | 11-09-3 |
| Piston, master cylinder | 5-44-3 to 5-44-8 |
| Piston, power steering gear | 19-56-6 to 19-56-90 |
| Piston, wheel cylinder | 5-70-1 |
| Piston pin | 9-36-5 to 9-36-7 |
| Piston w/pin | 9-34-5 |
| Piston ring set | 9-35-1 |
| Plate, chain case cover | 9-24-5 to 9-24-7 |
| Plate, clutch cover and pressure | 6-14-1 to 6-14-10 |
| Plate, clutch pressure | 6-15-1 |
| Plate, front fender | 12-04-4 to 12-04-33 |
| Plate, hood name | 15-06-3 to 15-06-17 |
| Plug, body | 23-32-14 to 23-32-82 |
| Plug, spark | 8-36-1 to 8-36-124 |

| PART NAME | CODE |
|---|---|
| Power brake | 1-42-1 |
| Power brake air cleaner | 5-113-17 |
| Power brake hose clamp | 5-112-1 |
| Power brake power unit | 5-100-1 to 5-100-210 |
| Power brake vacuum check valve | 5-105-1 |
| Power brake vacuum hose | 5-111-17 |
| Power brake tube connector | 5-110-18 |
| Power brake vacuum tank | 5-102-2 to 5-102-11 |
| Power steering column jacket | 19-31-1 to 19-31-24 |
| Power steering gear | 19-01-8 to 19-01-62 |
| Power steering gear arm and idler arm | 19-27-2 to 19-27-55 |
| Power steering gear column jacket | 19-14-1 to 19-14-72 |
| Power steering gear cylinder | 19-55-1 |
| Power steering gear hose | 19-58-7 to 19-58-31 |
| Power steering gear housing | 19-02-4 to 19-02-69 |
| Power steering gear piston | 19-56-6 to 19-56-90 |
| Power steering gear shaft and roller tooth | 19-19-4 to 19-19-72 |
| Power steering gear tube and worm | 19-15-2 to 19-15-69 |
| Power steering gear valve | 19-57-2 to 19-57-64 |
| Power steering gearshift control rod | 19-48-1 |
| Power steering gearshift rod | 19-46-3 to 19-46-35 |
| Power steering gearshift tube | 19-46-3 to 19-46-35 |
| Power steering oil pump | 19-54-2 to 19-54-248 |
| Power steering wheel | 19-30-4 to 19-30-18 |
| Powerflite transmission | 21-02-1 to 21-02-6 |
| Powerflite transmission band | 2-136-5 to 21-136-52 |
| Powerflite transmission case | 21-03-1 to 21-03-45 |




MyMopar.com

| PART NAME | CODE |
|---|---|
| Powerflite transmission case extension | 21-04-1 to 21-04-2 |
| Powerflite transmission control lever | 21-142-12 to 21-142-21 |
| Powerflite transmission direct clutch | 21-133-5 to 21-133-43 |
| Powerflite transmission gearshift button and cable | 21-30-28 to 21-30-394 |
| Powerflite transmission gearshift lever | 21-30-28 to 21-30-394 |
| Powerflite transmission governor | 21-138-2 to 21-138-38 |
| Powerflite transmission input shaft and torque convertor reaction shaft | 21-129-5 to 21-129-23 |
| Powerflite transmission kickdown planet pinion carrier and component parts | 21-134-5 to 21-134-40 |
| Powerflite transmission neutral starter switch | 21-113-24 to 21-113-29 |
| Powerflite transmission oil pan | 21-119-3 to 21-119-19 |
| Powerflite transmission oil pump | 21-118-6 to 21-118-45 |
| Powerflite transmission oil pump strainer | 21-117-1 to 21-117-24 |
| Powerflite transmission output shaft. | 21-05-1 to 21-05-26 |
| Powerflite transmission package | 21-01-3 |
| Powerflite transmission regulator valve body and valves | 21-131-1 to 21-131-50 |
| Powerflite transmission reverse planet pinion carrier and component parts | 21-135-5 to 21-135-35 |
| Powerflite transmission servo | 21-137-5 to 21-137-59 |
| Powerflite transmission set | 21-01-3 |
| Powerflite transmission speedometer cable includes shaft and housing | 21-84-1 to 21-84-4 |
| Powerflite transmission speedometer pinion | 21-85-5 to 21-85-76 |
| Powerflite transmission valve body and valves | 21-139-4 to 21-139-193 |
| Propeller shaft | 16-02-1 to 16-02-5 |
| Propeller shaft center bearing | 16-16-1 to 16-16-47 |
| Propeller shaft center bearing housing | 16-17-1 |
| Propeller shaft flange | 16-20-1 to 16-20-3 |
| Propeller shaft sliding yoke | 16-14-1 to 16-14-9 |
| Propeller shaft spline | 16-14-1 to 16-14-9 |
| Propeller shaft yoke | 16-20-1 to 16-20-3 |
| Pulley, fan belt idler | 7-04-1 to 7-04-16 |
| Pulley, fan drive and driven | 7-06-1 to 7-06-14 |
| Pump, automatic 3 speed transmission oil | 21-118-1 to 21-118-45 |
| Pump, fuel | 14-73-1 |
| Pump, oil | 10-07-2 to 10-07-12 |
| Pump, powerflite transmission oil | 21-118-6 to 21-118-45 |
| Pump, power steering oil | 19-54-2 to 19-54-248 |
| Pump, water | 7-42-1 to 7-42-4 |
| Quarter lamp | 8-11-6 to 8-11-12 |
| Quarter panel ornament lamp | 8-06-1 to 8-06-2 |


## R


| | |
|---|---|
| Rack, roof rail and luggage | 23-40-82 to 23-40-190 |
| Radiator core | 7-11-3 |
| Radiator drain cock | 7-13-2 |
| Radiator filler cap | 7-12-1 |
| Radiator grille | 7-16-1 to 7-16-84 |


8-11-12



MyMopar.com

| PART NAME | CODE |
|---|---|
| Radiator fan shroud | 7-08-2 to 7-08-16 |
| Radiator hose | 7-14-4 to 7-14-10 |
| Radiator medallion | 7-17-1 to 7-17-11 |
| Radiator shield | 7-31-7 to 7-31-45 |
| Radiator stone deflector | 7-35-2 to 7-35-21 |
| Radiator upper cross bar | 7-33-1 to 7-33-4 |
| Radiator yoke | 7-26-2 to 7-26-28 |
| Radio | 1-87-2 to 1-87-464 |
| Radio antenna | 1-88-1 to 1-88-230 |
| Radio foot selector switch | 1-87-5 |
| Rail, standard transmission gearshift | 21-34-42 to 21-34-47 |
| Rail and fork, standard transmission Rear axle control strut | 3-01-25 to 3-01-35 |
| Rear axle differential and carrier | 3-03-1 to 3-03-31 |
| Rear axle differential clutch parts | 3-09-1 to 3-09-2 |
| Rear axle housing | 3-02-1 to 3-02-20 |
| Rear bumper face bar | 13-66-3 to 13-66-147 |
| Rear fender stone shield | 12-23-4 to 12-23-5 |
| Rear pocket panel switch | 8-11-6 |
| Rear shelf radio speaker fader switch | 1-87-289 |
| Rear spring | 17-11-1 to 17-11-7 |
| Rear spring bumper | 17-19-3 to 17-19-20 |
| Rear spring center bolt | 17-14-10 |
| Rear spring clip | 17-15-1 to 17-15-28 |
| Rear spring leaf | 17-12-4 to 17-12-12 |
| Rear spring shackle | 17-16-1 |
| Rear spring silent bloc | 17-17-3 to 17-17-5 |
| Rear window defroster switch | 1-48-300 |
| Receiver, ash | 23-02-1 to 23-02-150 |
| Receiver drier | 24-26-20 to 24-26-100 |
| Regulator, door | 23-14-10 to 23-14-153 |
| Reinforcement, body | 23-07-168 to 23-07-169 |
| Reinforcement, master cylinder | 5-42-1 |
| Relay, standard transmission overdrive kickdown solenoid | 21-69-2 to 21-69-5 |
| Rest, head | 1-16-1 |
| Rocker, valve | 9-43-1 to 9-43-26 |
| Rod, accelerator pedal to accelerator shaft | 14-07-1 to 14-07-18 |
| Rod, clutch release fork | 6-24-1 to 6-24-6 |
| Rod, clutch pedal | 6-50-1 to 6-50-12 |
| Rod, fuel pump push | 14-77-17 |
| Rod, master cylinder piston push | 5-47-2 to 5-47-10 |
| Rod, power steering gearshift | 19-46-3 to 19-46-35 |
| Rod, power steering gearshift control | 19-48-1 |
| Rod, standard gearshift control | 19-48-1 to 19-48-23 |
| Rod, standard steering gearshift | 19-46-3 to 19-46-55 |
| Rod, steering knuckle tie | 2-07-1 to 2-07-28 |
| Rod, valve push | 9-42-1 |
| Rod, wheel cylinder piston push | 5-12-1 |
| Roller and bushing, universal joint cross | 16-10-1 to 16-10-3 |
| Roller tooth and shaft, power steering gear | 19-19-4 to 19-19-72 |
| Roller tooth and shaft, standard steering gear | 19-19-4 to 19-19-35 |
| Roof rail and luggage rack | 23-40-82 to 23-40-190 |




MyMopar.com

| PART NAME | CODE |
|---|---|
| Roof rail dome lamp switch | 8-05-14 |
| Rotor, oil pump | 10-14-18 to 10-14-19 |
| Run, Window glass | 23-42-13 to 23-42-57 |

## S

| | |
|---|---|
| Screen, tailgate window | 1-08-1 |
| Screw, wheel cylinder bleeder | 5-67-1 |
| Seal, body | 23-31-33 to 23-31-205 |
| Seal, clutch release fork | 6-23-3 |
| Seal, crankshaft rear bearing oil | 9-11-1 to 9-11-7 |
| Seal, drive shaft oil | 3-35-14 |
| Seal, standard transmission main shaft rear bearing oil | 21-22-2 |
| Seal, water pump | 7-46-1 to 7-46-10 |
| Seal, wheel brake adjusting cam dust shield | 5-22-8 |
| Seat adjuster, front | 23-47-6 to 23-47-457 |
| Seat, front | 23-45-12 to 23-45-55 |
| Seat, second | 23-48-6 to 23-48-188 |
| Seat, third | 23-48-6 to 23-48-188 to 23-48-188 |
| Seat guide | 23-47-6 to 23-47-456 |
| Seat spring | 23-52-1 |
| Second seat | 23-48-6 |
| Servos, automatic 3 speed transmission | 21-137-5 to 21-137-205 |
| Servos, powerflite transmission | 21-137-5 to 21-137-59 |
| Set, automatic 3 speed transmission | 21-01-3 |
| Set, drive gear and pinion | 3-19-1 |
| Set, piston ring | 9-35-1 |
| Set, powerflite transmission | 21-01-3 |
| Set, standard transmission | 21-01-3 |
| Shackle, rear spring | 17-16-1 |
| Shaft, accelerator | 14-11-1 to 14-11-48 |
| Shaft, automatic 3 speed transmission input | 21-129-5 to 21-129-33 |
| Shaft, automatic 3 speed transmission intermediate | 21-129-5 to 21-129-33 |
| Shaft, automatic 3 speed transmission output | 21-05-1 to 21-05-35 |
| Shaft, automatic 3 speed transmission torque converter reaction | 21-129-5 to 21-129-33 |
| Shaft, brake pedal | 5-29-1 |
| Shaft, clutch torque | 6-52-1 to 6-52-15 |
| Shaft, differential pinion | 3-08-1 to 3-08-2 |
| Shaft, drive | 3-32-1 to 3-32-9 |
| Shaft, oil pump drive | 10-09-1 to 10-09-7 |
| Shaft, powerflite transmission input shaft and torque converter reaction | 21-129-5 to 21-129-23 |
| Shaft, powerflite transmission output | 21-05-1 to 21-05-26 |
| Shaft, propeller | 16-02-1 to 16-02-5 |
| Shaft, standard transmission main | 21-16-3 |
| Shaft, standard transmission reverse idler | 21-12-1 to 21-12-2 |
| Shaft, sway eliminator | 17-29-5 to 17-29-21 |
| Shaft and impeller, water pump | 7-45-2 to 7-45-31 |
| Shaft and roller tooth, power steering gear | 19-19-4 to 19-19-72 |
| Shaft and roller tooth, standard steering gear | 19-19-4 to 19-19-35 |
| Shield, carburetor heat | 14-59-1 |
| Shield, front fender | 12-04-4 to 12-04-33 |
| Shield, fuel tank dust | 14-87-2 |
| Shield, radiator | 7-31-7 to 7-31-45 |
| Shield, wheel brake dust | 5-16-1 |
| Shock absorber | 17-23-3 to 17-23-57 |
| Shock absorber bracket | 17-24-28 |
| Shoe, wheel brake | 5-03-1 to 5-03-23 |
| Shroud, radiator fan | 7-08-2 to 7-08-16 |




MyMopar.com

| PART NAME | CODE |
|---|---|
| Side sill and belt bar | 23-51-3 to 23-51-41 |
| Solenoid switch | 8-52-330 |
| Spare wheel carrier | 22-20-29 to 22-20-89 |
| Spark plug | 8-36-1 to 8-36-124 |
| Spline, propeller shaft | 16-14-1 to 16-14-9 |
| Spring, accelerator pedal return | 14-06-1 to 14-06-10 |
| Spring, brake pedal return | 5-34-1 |
| Spring, clutch pressure | 6-16-1 |
| Spring, clutch release bearing pull-back | 6-20-14 |
| Spring, clutch release fork pull-back | 6-27-5 |
| Spring, clutch release overcenter spring | 6-35-1 to 6-35-19 |
| Spring, master cylinder piston return | 5-46-1 |
| Spring, rear | 17-11-1 to 17-11-7 |
| Spring, seat | 23-52-1 |
| Sprocket, camshaft | 9-17-5 to 9-17-13 |
| Sprocket, crankshaft | 9-08-5 |
| Standard gearshift control rod | 19-48-1 to 19-48-23 |
| Standard gearshift rod | 19-46-3 to 19-46-55 |
| Standard gearshift tube | 19-46-3 to 19-46-55 |
| Standard steering column bracket | 19-31-1 to 19-31-24 |
| Standard steering gear | 19-01-3 to 19-01-24 |
| Standard steering gear arm and idler arm | 19-27-2 to 19-27-55 |
| Standard steering gear column jacket | 19-14-1 to 19-14-77 |
| Standard steering gear grease retaining tube | 19-13-4 to 19-13-6 |
| Standard steering gear housing | 19-02-4 to 19-02-21 |
| Standard steering gear housing cover | 19-04-1 to 19-04-13 |
| Standard steering gear shaft and roller tooth | 19-19-4 to 19-19-35 |
| Standard steering gear tube and worm | 19-15-3 to 19-15-63 |
| Standard steering wheel | 19-30-4 to 19-30-18 |
| Standard transmission | 21-02-1 |
| Standard transmission case | 21-03-1 to 21-03-2 |
| Standard transmission case extension | 21-04-1 to 21-04-12 |
| Standard transmission clutch gear | 21-14-1 to 21-14-20 |
| Standard transmission countershaft | 21-24-2 to 21-24-22 |
| Standard transmission countershaft bearing | 21-25-2 to 21-25-6 |
| Standard transmission countershaft gear | 21-15-2 to 21-15-33 |
| Standard transmission gear | 21-10-4 to 21-10-16 |
| Standard transmission gearshift fork | 21-39-3 |
| Standard transmission gearshift housing | 21-29-3 to 21-29-37 |
| Standard transmission gearshift lever | 21-30-2 to 21-30-107 |
| Standard transmission gearshift rail | 21-34-42 to 21-34-47 |
| Standard transmission main drive pinion | 21-09-2 to 21-09-33 |
| Standard transmission main shaft | 21-16-3 |
| Standard transmission main shaft pilot bearing | 21-17-2 to 21-17-7 |
| Standard transmission main shaft rear bearing | 21-19-2 |
| Standard transmission main shaft rear bearing oil seal | 21-22-2 |
| Standard transmission package | 21-01-3 |
| Standard transmission remote control gearshift | 21-42-11 to 21-42-43 |
| Standard transmission reverse idler gear | 21-11-1 to 21-11-9 |




MyMopar.com

| PART NAME | CODE |
|---|---|
| Standard transmission reverse idler shaft | 21-12-1 to 21-12-2 |
| Standard transmission set | 21-01-3 |
| Standard transmission speedometer cable, includes shaft and housing | 21-84-1 to 21-84-4 |
| Standard transmission speedometer gear and pinion | 21-85-4 to 21-85-76 |
| Starter switch | 8-35-59 |
| Starting motor | 8-52-4 to 8-52-387 |
| Steering knuckle | 2-03-3 |
| Steering knuckle tie rod | 2-07-1 to 2-07-28 |
| Steering linkage knuckle arm | 2-05-4 |
| Stop, manifold heat control valve | 9-62-1 |
| Stop lamp | 8-58-60 |
| Stop lamp switch | 8-58-60 |
| Strainer, automatic 3 speed transmission oil pump | 21-117-1 to 21-117-10 |
| Strainer, hood | 15-28-1 to 15-28-18 |
| Strainer, oil | 10-23-7 |
| Strainer, powerflite transmission oil pump | 21-117-1 to 21-117-24 |
| Strap, battery hold-down | 13-34-3 |
| Striker, body | 23-08-12 to 23-08-60 |
| Striker, hood lock | 15-13-2 to 15-13-9 |
| Strut, rear axle control | 3-01-25 to 3-01-35 |
| Stud, battery hold-down | 13-36-5 |
| Stud, throttle linkage ball | 14-13-1 to 14-13-5 |
| Stud and gasket, exhaust pipe flange | 11-06-2 to 11-06-8 |
| Support, engine front | 9-64-5 |
| Support, frame front bumper | 13-03-21 |
| Support, fuel tank | 14-88-21 to 14-88-27 |
| Support, muffler | 11-02-1 to 11-02-4 |
| Support, parking brake | 4-29-1 to 4-29-16 |
| Support, tail pipe | 11-10-1 to 11-10-42 |
| Support, wheel brake | 5-13-1 to 5-13-9 |
| Support and clamp, exhaust pipe | 11-08-1 to 11-08-24 |
| Suspension, air | 25-01-1 to 25-01-21 |
| Sway eliminator shaft | 17-29-5 to 17-29-21 |
| Switch, actuator | 1-82-41 |
| Switch, automatic lamp door | 8-12-2 to 8-12-3 |
| Switch, automatic 3 speed transmission neutral starter | 21-113-24 to 21-113-29 |
| Switch, back-up lamp | 8-56-2 |
| Switch, courtesy | 8-11-6 |
| Switch, directional | 8-50-82 |
| Switch, directional signal cancelling | 8-50-125 |
| Switch, foot dimmer | 8-53-150 |
| Switch, front door | 8-12-2 |
| Switch, headlamp | 8-53-270 |
| Switch, horn blowing | 8-33-90 |
| Switch, ignition | 8-35-59 |
| Switch, low oil pressure | 8-53-327 |
| Switch, map lamp | 8-42-25 |
| Switch, motor driven radio antenna | 1-88-205 |
| Switch, powerflite transmission neutral starter | 21-113-24 to 21-113-29 |
| Switch, radio foot selector | 1-87-5 |
| Switch, rear pocket panel | 8-11-6 |
| Switch, rear shelf radio speaker fader | 1-87-289 |
| Switch, rear window defroster | 1-48-300 |
| Switch, roof rail dome lamp | 8-05-14 |
| Switch, solenoid | 8-52-330 |
| Switch, starter | 8-35-59 |
| Switch stop lamp | 8-58-60 |
| Switch, trunk lamp | 8-13-2 |
| Switch, windshield washer wiper | 1-82-14 |
| Switch and lamp, dome | 8-05-3 to 8-05-32 |
| Switch and lock cylinder, ignition | 8-35-4 to 8-35-122 |
| Switches | 8-53-150 to 8-53-327 |


## T


| PART NAME | CODE |
|---|---|
| Tail and stop lamp | 8-55-1 to 8-55-200 |
| Tail pipe | 11-09-3 |
| Tail pipe support | 11-10-1 to 11-10-42 |
| Tailgate | 23-54-1 to 23-54-212 |
| Tailgate window screen | 1-08-1 |
| Tank, fuel | 14-86-1 to 14-86-85 |




MyMopar.com

| PART NAME | CODE |
|---|---|
| Tank, power brake vacuum | 5-102-2 to 5-102-11 |
| Tappet, valve | 9-41-1 to 9-41-12 |
| Tee, brake tube | 5-58-1 |
| Terminal block | 8-21-1 to 8-21-11 |
| Thermostat | 7-41-4 |
| Theromstat, manifold heat control valve | 9-58-1 to 9-58-14 |
| Throttle linkage ball joint | 14-13-1 to 14-13-5 |
| Throttle linkage ball stud | 14-13-1 to 14-13-5 |
| Third seat | 23-48-6 to 23-48-188 |
| Timing chain | 9-20-1 |
| Tire cover | 1-116-2 |
| Toe board | 23-04-2 to 23-04-253 |
| Top, folding | 23-58-3 to 23-58-607 |
| Torque converter | 9-46-4 to 9-46-229 |
| Torsion parts, front suspension | 2-14-3 to 2-14-15 |
| Transmission, automatic 3 speed | 21-02-1 to 21-02-6 |
| Transmission countershaft free | |
| Transmission, powerflite | 21-02-1 to 21-02-6 |
| Transmission, standard | 21-02-1 |
| Trim finish moulding | 23-26-2 to 23-26-89 |
| Trough, drain | 23-59-37 to 23-59-61 |
| Trunk compartment light | 1-30-1 |
| Trunk lamp | 8-13-1 to 8-13-19 |
| Trunk lamp switch | 8-13-2 |
| Tube, oil filter | 10-27-1 |
| Tube, brake frame | 5-53-3 to 5-53-34 |
| Tube, fuel line | 14-89-2 to 14-89-57 |
| Tube, fuel pump to carburetor | 14-85-1 |
| Tube, fuel pump to fuel filter | 14-85-1 |
| Tube, master cylinder brake | 5-52-3 to 5-52-62 |
| Tube, Power Steering gearshift | 19-46-3 to 19-46-35 |
| Tube, standard gearshift | 19-46-3 to 19-46-55 |
| Tube, standard steering gear grease retaining | 19-13-4 to 19-13-6 |
| Tube, wheel cylinder connecting | 5-55-1 |
| Tube and worm, power steering gear | 19-15-2 to 19-15-69 |
| Tube and worm, standard steering gear | 19-15-3 to 19-15-63 |


## U


| PART NAME | CODE |
|---|---|
| Underhood light | 1-13-1 to 1-13-9 |
| Unit, evaporator | 24-28-3 to 24-28-382 |
| Unit, fluid fan drive | 7-07-1 |
| Unit, power brake power | 5-100-1 to 5-100-210 |
| Universal joint | 16-03-1 to 16-03-20 |
| Universal joint body | 16-04-1 |
| Universal joint centering button | 16-06-1 to 16-06-3 |
| Universal joint cross | 16-08-6 to 16-08-7 |
| Universal joint cross roller and bushing | 16-10-1 to 16-10-3 |
| Universal joint cross roller and bearing block | 16-09-1 to 16-09-2 |
| Universal joint dust cover | 16-07-3 to 16-07-4 |


## V


| PART NAME | CODE |
|---|---|
| Valve, exhaust | 9-39-6 to 9-39-17 |
| Valve, intake | 9-39-1 to 9-39-5 |
| Valve, manifold heat control | 9-59-13 to 9-59-15 |
| Valve, master cylinder | 5-43-1 to 5-43-5 |
| Valve, oil pressure relief | 10-22-11 to 10-22-41 |
| Valve, power brake vacuum check | 5-105-1 |
| Valve, power steering gear | 19-57-3 to 19-57-64 |




MyMopar.com

| PART NAME | CODE |
|---|---|
| Valve push rod | 9-42-1 |
| Valve rocker | 9-43-1 to 9-43-26 |
| Valve spring cover | 9-40-1 to 9-40-18 |
| Valve tappet | 9-41-1 to 9-41-12 |
| Valve tappet cover | 9-40-1 to 9-40-18 |
| Vent, cowl | 23-61-39 to 23-61-119 |
| Vent wing | 23-64-4 to 23-64-314 |
| Ventilator crankcase | 10-02-8 to 10-02-15 |
| Vibration damper crankshaft | 9-13-5 |
| Visor | 1-32-2 to 1-32-3 |

## W

| | |
|---|---|
| Warning light | 1-06-1 to 1-06-2 |
| Washer, windshield | 1-82-2 to 1-82-45 |
| Water pump | 7-42-1 to 7-42-4 |
| Water pump body | 7-43-1 to 7-43-5 |
| Water pump by-pass nipple | 7-48-22 |
| Water pump gasket | 7-44-3 to 7-44-4 |
| Water pump housing | 7-43-1 to 7-43-5 |
| Water pump seal | 7-46-1 to 7-46-10 |
| Water pump shaft and impeller | 7-45-2 to 7-45-31 |
| Weatherstrip | 23-63-14 to 23-63-181 |
| Weight, wheel balance | 22-09-1 |
| Wheel | 22-01-5 to 22-01-53 |
| Wheel, power steering | 19-30-4 to 19-30-18 |
| Wheel, standard steering | 19-30-4 to 19-30-18 |
| Wheel balance weight | 22-09-1 |
| Wheel brake adjusting cam dust shield seal | 5-22-8 |
| Wheel brake cylinder | 5-64-1 to 5-64-2 |
| Wheel brake dust shield | 5-16-1 |
| Wheel brake lining | 5-03-1 to 5-03-23 |
| Wheel brake shoe guide | 5-26-1 to 5-26-4 |
| Wheel brake shoe | 5-03-1 to 5-03-23 |
| Wheel brake support | 5-13-1 to 5-13-9 |
| Wheel cylinder bleeder screw | 5-67-1 |
| Wheel cylinder boot | 5-69-1 |
| Wheel cylinder connecting tube | 5-55-1 |
| Wheel cylinder package | 5-63-1 to 5-63-3 |
| Wheel cylinder piston | 5-70-1 |
| Wheel cylinder piston cup | 5-71-1 to 5-71-2 |
| Wheel cylinder piston cup expander | 5-72-1 |
| Wheel cylinder piston push rod | 5-12-1 |
| Wheel hub | 22-05-14 to 22-05-24 |
| Window | 23-64-4 to 23-64-314 |
| Window glass run | 23-42-13 to 23-42-57 |
| Window lift (electric) | 23-41-4 to 23-41-261 |
| Window lift (manual) | 23-39-2 to 23-39-53 |
| Windshield | 23-66-135 to 23-66-235 |
| Windshield washer | 1-82-2 to 1-82-45 |
| Windshield washer wiper switch | 1-82-14 |
| Windshield wiper | 23-67-5 to 23-67-204 |
| Wing, vent | 23-64-4 to 23-64-314 |
| Wiper, windshield | 23-67-5 to 23-67-204 |
| Wiring, chasis and body | 8-15-2 to 8-15-6 |




MyMopar.com

| PART NAME | CODE |
|---|---|
| Wiring, ignition | 8-36-1 to 8-36-124 |
| Wiring, instrument panel | 8-19-64 |
| Worm and tube, power steering gear | 19-15-2 to 19-15-63 |
| Worm and Tube, standard steering gear | 19-15-3 to 19-15-63 |

| PART NAME | CODE |
|---|---|
| **Y** | |
| Yoke, propeller shaft | 16-20-1 to 16-20-3 |
| Yoke, propeller shaft sliding | 16-14-1 to 16-14-9 |
| Yoke, radiator | 7-26-2 to 7-26-28 |


## NOTES



MyMopar.com

| PART NAME | CODE | PART NAME | CODE |
|---|---|---|---|

## NOTES



MyMopar.com

# NUMERICAL INDEX

| PART NUMBER | CODE |
|---|---|
| Standard Parts not listed in this Index. | |
| 40 654. . . . | 8-29-2 |
| 50 082. . . . | 9-05-6 |
| 50 652. . . . | 3-32-6 |
| 53 298. . . | 9-07-12 |
| 53 553. . . . | 3-32-5 |
| 117 957. . | 24-28-197 |
| 120 375. . . | 15-06-17 |
| 127 934. . . . | 8-44-1 |
| 128 027. . . | 2-10-68 |
| 131 282. . . . | 8-44-1 |
| 132 096. . | 5-100-120 |
| | 5-100-121 |
| 141 232. . . . | 3-08-1 |
| 142 450. . . . | 8-44-1 |
| 142 451. . . . | 8-44-1 |
| 142 453. . . . | 8-44-1 |
| 147 683. . . | 8-05-22 |
| | 8-56-60 |
| 147 685. . . . | 8-20-3 |
| 151 567. . . . | 8-44-1 |
| 151 576. . . . | 8-44-1 |
| 151 577. . . . | 8-44-1 |
| 151 578. . . . | 8-44-1 |
| 152 240. . . . | 8-44-1 |
| 181 672. . . | 11-06-2 |
| 272 429. . . . | 7-43-5 |
| 272 848. . . | 5-112-1 |
| 273 703. . . . | 3-32-9 |
| 274 004. . . . | 8-44-1 |
| 274 110. . | 23-58-240 |
| 274 148. . . . | 8-44-1 |
| 274 461. . . | 14-67-26 |
| | 14-89-57 |
| 307 555. . . | 6-14-10 |
| 308 247. . . | 3-11-14 |
| 314 926. . . | 6-14-10 |
| 314 948. . . . | 3-03-8 |
| 318 011. . . | 3-03-25 |
| 327 072. . . . | 3-31-7 |
| 376 751. . . | 19-15-63 |
| 381 875. . . | 9-39-17 |
| 388 302. . . . | 4-07-4 |
| 392 911. . . | 5-62-20 |
| 404 194. . . | 4-23-24 |
| 441 256. . | 23-23-30 |
| 445 153. . . | 15-03-19 |
| | 15-06-3 |
| | 15-06-17 |
| 446 059. . . | 12-15-2 |
| 446 641. . . . | 7-43-5 |
| 448 797. . . | 5-112-1 |
| 572 507. . . | 5-111-17 |
| 579 445. . . | 16-03-7 |
| 581 523. . . | 14-67-26 |
| 600 071. . . . | 5-26-1 |
| 600 072. . . . | 5-26-2 |
| 600 073. . . . | 5-26-2 |
| 600 194. . . | 22-06-14 |
| 600 983. . . . | 4-06-6 |
| 601 014. . . | 5-13-10 |
| 601 108. . . | 21-17-7 |
| 601 864. . . | 3-11-13 |
| 602 454. . . | 8-29-154 |
| 602 820. . . | 16-03-19 |
| 605 004. . . | 16-03-16 |
| 611 898. . . . | 8-16-8 |
| 618 621. . . | 10-22-40 |
| 618 622. . . | 10-22-41 |
| 620 180. . . | 19-04-13 |
| 620 181. . . | 19-04-13 |
| 623 207. . . | 8-27-114 |
| 629 768. . . | 16-06-1 |
| 631 217. . . | 19-46-41 |
| 631 809. . . | 21-19-15 |
| 631 810. . . | 21-19-15 |
| 631 823. . . | 21-09-23 |
| | 21-14-20 |
| | 21-19-15 |
| | 21-85-29 |
| 631 824. . . | 21-09-23 |
| | 21-14-20 |
| | 21-19-15 |
| 631 825. . . | 21-09-23 |
| | 21-14-20 |
| | 21-19-15 |
| 631 877. . . | 21-09-25 |
| 632 258. . . | 19-48-21 |
| 632 587. . . . | 3-06-6 |
| 633 238. . . . | 6-22-4 |
| 633 602. . . | 3-22-45 |
| 635 884. . . | 6-52-11 |
| 637 539. . . | 19-15-63 |
| 638 637. . . | 16-03-3 |
| 639 853. . . | 1-88-60 |
| 640 086. . . | 19-15-60 |
| 640 280. . . | 21-19-15 |
| 640 331. . . | 21-19-15 |
| 640 332. . . | 21-09-23 |
| | 21-14-20 |
| | 21-19-15 |
| 651 402. . . . | 3-32-8 |
| 652 970. . . | 4-26-19 |
| 657 572. . . | 1-21-12 |
| | 14-02-39 |
| 658 998. . . . | 6-19-3 |
| 660 146. . . . | 6-13-8 |
| 661 117. . . | 19-14-68 |
| 661 118. . . | 19-14-69 |
| 661 119. . . | 19-14-70 |
| 663 479. . . . | 3-07-2 |
| 663 481. . . . | 3-20-1 |
| 663 482. . . . | 3-20-2 |
| 663 607. . . . | 3-32-9 |
| 665 151. . . | 1-108-38 |
| | 8-13-9 |
| | 8-16-10 |
| 665 454. . . . | 4-06-3 |
| 666 924. . . | 21-11-9 |
| 666 927. . . | 21-11-2 |
| | 21-25-2 |
| 667 774. . . | 14-11-19 |
| | 14-14-5 |
| 669 896. . . | 6-35-17 |
| 670 752. . . | 21-22-2 |
| 670 776. . . | 9-46-53 |
| | 21-136-235 |
| 671 477. . . | 8-29-327 |
| 671 481. . . | 8-29-327 |
| 671 487. . . | 8-29-208 |
| 671 490. . . | 8-29-20 |
| 671 915. . . | 6-20-14 |
| 673 009. . . | 8-29-208 |
| 673 014. . . | 8-29-21 |
| 674 936. . . | 8-29-21 |
| 675 594. . . . | 9-45-7 |
| | 9-46-11 |
| 679 118. . . | 22-05-14 |
| 679 119. . . | 22-05-14 |
| 681 135. . | 23-36-123 |
| | 23-36-128 |
| 681 320. . . . | 3-33-4 |
| 681 322. . . . | 3-33-4 |
| 682 905. . . | 19-19-7 |
| 683 057. . . . | 9-62-1 |
| 684 364. . . . | 6-13-4 |
| 684 748. . . | 1-48-129 |
| 687 901. . . | 22-05-14 |
| 687 902. . . | 22-05-14 |
| 688 900. . . | 11-10-26 |
| 690 676. . . | 14-30-8 |
| 694 773. . . . | 4-07-4 |
| 697 812. . . | 21-25-4 |
| 697 814. . . | 4-26-11 |
| 698 399. . . . | 3-33-2 |
| 698 400. . . . | 3-33-1 |
| 698 403. . . . | 3-11-2 |
| 698 404. . . . | 3-11-1 |
| 729 152. . . | 23-06-14 |
| 830 812. . . . | 8-16-3 |
| 849 517. . . | 23-18-21 |
| 852 414. . . | 19-30-18 |
| 852 429. . . . | 4-07-2 |
| 852 454. . . . | 4-26-2 |
| 853 876. . . | 4-07-16 |
| 855 274. . . | 4-06-11 |
| 855 519. . . . | 6-15-1 |
| 857 443. . . . | 5-44-4 |
| 857 999. . . | 16-08-6 |
| 858 006. . . | 16-10-2 |
| 858 007. . . | 16-09-1 |
| 859 882. . . . | 6-13-4 |
| 861 540. . . | 8-27-320 |
| 863 146. . . . | 4-03-1 |
| 863 905. . . | 6-22-19 |
| 863 986. . | 21-119-11 |
| 863 987. . | 21-119-12 |
| 864 397. . . . | 6-16-1 |
| 865 180. . . | 21-09-33 |
| 865 181. . . | 21-09-33 |
| 867 386. . . | 10-14-19 |
| 869 577. . . | 14-35-6 |
| 870 469. . . | 9-48-153 |
| 870 539. . . | 16-07-3 |
| 870 540. . . | 16-07-3 |
| 870 821. . . . | 8-16-4 |
| 892 569. . . . | 1-04-8 |
| | 23-22-8 |
| 898 492. . . . | 8-20-8 |
| 903 895. . | 23-41-177 |
| 913 297. . . . | 8-21-1 |
| | 23-41-56 |
| | 23-58-195 |
| 920 402. . . | 21-84-4 |
| 927 630. . . | 21-09-5 |
| 932 143. . . | 15-14-12 |
| 952 538. . . | 16-02-5 |
| 953 717. . . | 8-27-100 |
| 953 732. . . | 8-29-313 |
| 958 659. . . . | 5-45-8 |
| 960 003. . . . | 9-58-5 |
| 960 161. . . | 8-29-325 |
| 960 162. . . | 8-29-323 |
| 960 173. . . | 8-29-20 |
| 960 544. . . | 8-29-17 |
| 965 325. . . | 8-29-154 |
| 988 098. . . | 15-14-13 |
| 989 513. . . | 23-08-12 |
| 1061 157. . . | 9-46-10 |
| 1064 541. . . | 5-111-17 |
| 1064 754. . . . | 8-16-3 |
| 1067 037. . . . | 6-16-1 |
| 1089 709. . . | 21-84-4 |
| 1117 819. . | 21-131-27 |
| 1118 149. . . . | 3-32-4 |
| 1119 423. . . . | 5-56-2 |
| | 14-90-1 |
| 1122 532. . . . | 9-02-7 |
| | 9-46-9 |
| 1123 313. . . | 19-04-13 |
| 1124 304. . . . | 3-19-1 |
| 1124 984. . . | 10-07-8 |
| 1127 165. . . | 19-14-5 |
| 1134 479. . . | 19-04-5 |
| 1135 197. . . | 3-03-26 |
| 1136 872. . . . | 5-69-1 |
| 1137 203. . . . | 3-33-4 |
| 1137 669. . . | 14-07-5 |
| | 19-48-23 |
| 1137 795. . . | 13-64-6 |
| | 13-66-20 |
| | 13-68-10 |
| 1138 481. . . | 8-29-327 |
| 1138 526. . . | 8-52-11 |
| 1139 153. . . | 21-03-24 |
| | 21-29-36 |
| 1139 204. . . | 21-02-6 |
| 1139 316. . . | 22-05-24 |
| 1139 317. . . | 22-05-24 |
| 1139 896. . . | 3-35-14 |
| 1140 557. . . | 6-52-12 |
| 1141 541. . . . | 3-19-1 |
| 1142 006. . . . | 3-08-1 |
| 1142 258. . . | 22-04-11 |
| 1142 259. . . | 22-04-11 |
| 1142 299. . . | 19-14-35 |
| 1152 315. . . | 1-48-388 |
| 1188 668. . . | 19-19-25 |
| 1188 715. . . . | 3-33-2 |
| 1196 894. . . | 21-14-19 |
| 1202 829. . . | 8-29-154 |
| 1235 644. . | 24-28-210 |
| 1239 241. . . | 1-48-225 |
| 1239 344. . . | 1-108-49 |
| 1239 880. . . . | 7-26-8 |
| 1239 996. . . | 15-11-38 |
| 1242 974. . . . | 7-26-9 |
| | 13-18-31 |
| | 15-28-18 |
| | 23-31-6 |
| | 23-31-53 |
| | 23-61-39 |
| 1243 631. . . . | 7-46-1 |
| 1244 818. . . | 23-15-10 |
| | 23-32-67 |
| | 23-48-166 |
| 1249 332. . | 23-58-605 |
| 1249 525. . | 23-58-211 |
| 1253 327. . . | 8-29-208 |
| 1253 332. . . | 8-29-320 |
| 1253 336. . . | 8-29-12 |
| 1253 338. . . | 8-29-146 |
| 1253 343. . . | 8-29-208 |
| 1253 344. . . | 8-29-327 |



MyMopar.com

| PART NUMBER | CODE |
|---|---|
| 1253 346. . . | 8-29-323 |
| | 8-29-325 |
| 1253 348. . . | 8-29-313 |
| 1256 337. . . | 23-39-2 |
| | 23-39-44 |
| 1261 834. . . . | 5-67-1 |
| 1263 079. . . | 4-23-38 |
| | 14-90-1 |
| 1264 933. . . . | 8-16-5 |
| | 23-41-178 |
| 1265 840. . . | 17-26-38 |
| 1267 793. . . | 8-29-312 |
| 1272 820. . . | 1-48-334 |
| 1277 755. . . | 23-18-14 |
| 1297 879. . | 23-47-454 |
| 1298 930. . . | 23-06-14 |
| 1300 528. . . | 8-20-12 |
| 1300 503. . . | 8-52-241 |
| 1302 807. . . | 8-56-46 |
| | 21-03-25 |
| | 21-29-37 |
| 1311 849. . . | 19-14-71 |
| 1311 949. . . . | 6-13-4 |
| 1312 830. . . . | 5-70-1 |
| 1313 193. . . | 14-06-1 |
| 1313 312. . . . | 6-13-8 |
| 1313 735. . . | 17-26-28 |
| 1313 740. . . | 17-26-19 |
| 1314 013. . . | 4-26-23 |
| 1314 249. . . | 21-05-18 |
| | 21-137-8 |
| 1314 336. . . | 17-26-12 |
| 1314 476. . . | 4-07-28 |
| 1314 477. . . . | 4-07-2 |
| 1314 478. . . . | 4-07-1 |
| 1314 619. . . . | 8-12-3 |
| | 8-31-16 |
| | 8-42-10 |
| 1315 130. | 21-139-144 |
| 1315 155. . | 21-138-23 |
| 1315 466. . . | 1-48-555 |
| | 7-14-9 |
| 1315 697. . . | 22-05-24 |
| 1315 698. . . | 22-05-24 |
| 1315 879. . . . | 4-26-1 |
| 1316 627. . . . | 5-40-3 |
| 1316 628. . . . | 5-40-1 |
| 1316 772. . . | 19-14-15 |
| 1316 813. . | 21-30-390 |
| 1316 815. . | 21-119-25 |
| 1316 849. . . | 19-02-15 |
| | 21-113-28 |
| 1316 862. . . | 19-19-5 |
| 1316 864. . | 21-30-390 |
| 1317 150. . . | 4-26-16 |
| 1317 858. . . . | 4-07-3 |
| 1318 446. . . . | 5-43-1 |
| 1319 554. . . | 17-23-53 |
| 1319 555. . . | 17-23-53 |
| 1319 902. . . | 17-23-52 |
| 1320 133. . . | 14-06-1 |
| 1321 109. . . | 11-02-1 |
| | 11-10-1 |
| 1322 363. . . | 21-137-8 |
| 1322 445. . . | 21-137-8 |
| 1322 496. . | 21-139-42 |
| 1322 497. . | 21-139-45 |
| 1322 763. . . | 21-14-19 |
| 1322 765. . . | 21-10-16 |
| 1323 369. . . | 10-09-5 |
| 1323 593. . . | 21-129-7 |
| 1324 090. . . | 6-22-17 |
| 1324 264. . . | 10-14-18 |
| 1324 268. . . | 9-43-19 |
| 1324 281. . . | 10-09-7 |
| 1324 282. . . | 10-22-11 |
| 1324 470. . . . | 9-36-7 |
| 1325 701. . . . | 4-07-1 |
| 1325 850. . . | 9-48-126 |
| 1325 906. . . | 8-33-40 |
| 1326 091. . . . | 9-10-2 |
| 1326 093. . . . | 9-11-1 |
| 1326 219. . . . | 3-07-1 |
| 1326 773. . . | 16-02-5 |
| 1326 789. . . . | 4-01-1 |
| 1326 835. . . | 8-27-26 |
| 1326 836. . . . | 8-27-4 |
| 1326 847. . . | 14-29-5 |
| 1327 279. . . | 21-30-6 |
| 1327 576. . . | 21-118-8 |
| 1327 588. . | 21-129-16 |
| 1327 673. . | 21-131-10 |
| 1327 675. . | 21-131-20 |
| 1327 729. . | 21-133-43 |
| 1327 730. . | 21-133-43 |
| | 21-134-33 |
| 1327 749. . | 21-133-25 |
| 1327 847. . . | 3-22-25 |
| 1327 986. . . | 19-31-19 |
| 1328 352. . . | 10-22-15 |
| 1329 608. . | 21-135-28 |
| 1329 609. . | 21-135-28 |
| 1329 610. . | 21-135-28 |
| 1329 638. . | 21-137-50 |
| 1329 642. . | 21-137-59 |
| 1329 648. . | 21-137-19 |
| 1329 693. . . | 21-137-8 |
| | 21-137-16 |
| 1329 702. . | 21-138-19 |
| 1329 890. . . . | 5-12-1 |
| 1331 850. . . | 24-28-72 |
| 1343 212. . . | 8-28-19 |
| | 12-01-12 |
| 1343 998. . . . | 8-56-2 |
| 1345 871. . | 23-41-176 |
| 1349 190. . | 23-64-246 |
| 1370 460. . . | 4-23-46 |
| | 8-30-1 |
| | 21-30-367 |
| 1373 263. . . | 15-13-5 |
| 1377 825. . | 24-25-260 |
| 1377 831. . | 24-25-189 |
| 1377 904. . . | 24-25-94 |
| 1378 081. . | 24-25-110 |
| 1378 313. . . | 24-25-94 |
| 1380 060. . . | 23-32-51 |
| | 23-48-93 |
| 1381 435. . | 23-54-103 |
| | 23-64-4 |
| 1383 351. . | 23-41-128 |
| 1383 958. . . | 8-27-205 |
| 1391 246. . . | 8-29-172 |
| 1391 249. . . . | 8-29-1 |
| 1392 770. . . | 19-27-8 |
| 1400 185. . . | 14-74-1 |
| 1400 502. . . | 10-22-15 |
| 1400 503. . . | 10-22-15 |
| 1400 857. . . | 14-35-1 |
| 1401 221. . . | 21-129-7 |
| 1401 256. . | 21-117-10 |
| 1401 633. . . . | 7-01-3 |
| 1401 808. . . | 3-22-24 |
| 1401 809. . . | 3-22-24 |
| 1401 810. . . | 3-22-25 |
| 1402 443. . . | 3-35-14 |
| 1402 563. . . | 8-29-154 |
| 1402 685. . | 21-136-23 |
| | 21-136-49 |
| 1402 695. . . | 21-137-8 |
| 1402 740. | 21-139-111 |
| 1402 981. . . | 11-06-2 |
| 1403 226. . . | 19-15-12 |
| 1403 574. . . . | 4-06-7 |
| 1403 611. . . | 4-03-11 |
| 1403 997. . . | 8-28-282 |
| 1404 472. . . | 3-22-24 |
| 1406 254. . . | 10-07-7 |
| 1406 504. . . . | 6-16-1 |
| 1406 531. . | 21-136-52 |
| 1406 677. . . | 4-26-11 |
| 1406 748. . . . | 5-62-7 |
| 1406 964. . . | 4-23-50 |
| 1406 975. . . | 4-23-51 |
| 1406 976. . . | 4-23-51 |
| 1407 234. . . | 9-23-10 |
| 1407 347. . . . | 6-24-3 |
| 1408 232. . | 21-133-38 |
| 1408 254. . . | 21-04-2 |
| | 21-118-45 |
| 1408 255. . . | 21-05-26 |
| 1408 280. . . | 21-119-3 |
| 1408 282. . . | 21-119-5 |
| 1408 334. . . | 21-05-25 |
| 1408 373. . | 21-131-25 |
| 1408 375. . | 21-131-50 |
| 1408 384. . | 21-139-81 |
| 1408 388. . . | 21-139-9 |
| 1408 392. | 21-139-105 |
| 1408 393. | 21-139-108 |
| 1408 395. | 21-139-140 |
| 1408 853. . . . | 9-02-9 |
| 1408 867. . . | 9-10-19 |
| 1408 915. . . | 13-36-5 |
| 1408 918. . . | 13-36-5 |
| 1409 594. . . | 9-58-14 |
| 1426 500. . . | 24-25-3 |
| 1426 501. . . | 24-25-70 |
| 1432 929. . . | 23-32-79 |
| 1436 940. . . | 14-02-35 |
| 1439 256. . | 23-34-307 |
| 1439 758. . . | 1-48-203 |
| | 23-54-171 |
| | 23-67-161 |
| | 24-24-137 |
| 1440 596. . . | 23-41-7 |
| 1450 087. . . | 17-16-1 |
| 1450 089. . . | 17-11-1 |
| 1450 448. . . | 16-07-4 |
| 1450 499. . . | 7-14-10 |
| 1450 500. . . | 7-14-10 |
| 1450 961. . . | 17-16-1 |
| 1458 246. . . | 23-18-28 |
| 1458 247. . . | 23-18-28 |
| 1475 487. . . | 23-64-12 |
| 1475 900. . | 23-04-117 |
| 1476 900. . . | 23-10-17 |
| 1479 060. . . | 8-53-267 |
| 1484 652. . . . | 5-13-9 |
| 1485 066. . . | 3-03-31 |
| 1485 093. . . . | 3-04-6 |
| 1485 094. . . . | 3-04-6 |
| 1485 510. . . | 17-15-28 |
| 1486 205. . . | 19-01-61 |
| 1486 436. | 21-139-152 |
| 1488 462. . . | 19-14-4 |
| 1488 884. . . . | 4-06-1 |
| 1488 889. . . | 4-29-16 |
| 1488 890. . . | 4-29-15 |
| 1488 901. . . | 4-29-13 |
| 1489 340. . . | 9-41-12 |
| 1489 745. . . | 17-15-1 |
| 1495 533. . | 23-47-454 |
| 1495 542. . . | 8-29-100 |
| 1495 553. . . | 8-29-100 |
| 1498 776. . . | 23-41-4 |
| 1499 171. . . | 8-29-174 |
| 1499 172. . . | 8-29-173 |
| 1501 791. . . | 8-29-100 |
| 1505 652. . . | 21-19-2 |
| 1520 798. . . | 23-17-66 |
| 1523 160. . . . | 1-82-8 |
| 1527 492. . . | 21-84-4 |
| 1530 398. . . | 17-15-30 |
| 1530 775. . . | 4-07-23 |
| 1530 813. | 21-139-136 |
| 1530 820. | 21-139-135 |
| 1530 821. . | 21-139-91 |
| 1530 822. | 21-139-147 |
| 1530 834. . | 21-137-11 |
| 1532 943. . . | 16-07-3 |
| 1533 777. . . | 14-30-8 |
| 1533 850. . . . | 9-71-5 |
| 1536 242. . . | 9-43-23 |
| 1536 267. . . | 21-42-31 |
| 1536 268. . . | 19-56-90 |
| 1537 149. . | 21-129-13 |
| 1538 295. | 21-139-153 |
| 1539 430. . | 21-139-49 |
| | 21-139-98 |
| 1539 546. . . | 9-46-229 |
| | 21-136-236 |
| 1540 102. . . | 1-48-151 |
| 1540 383. . . | 23-67-81 |
| 1541 977. . . | 15-11-38 |
| 1544 841. . . | 23-08-12 |
| 1550 179. . . . | 7-03-1 |
| 1550 466. . . | 16-03-10 |
| 1551 007. . . . | 7-03-1 |
| 1551 067. . . | 9-03-18 |
| 1551 097. . . | 13-64-5 |
| | 13-64-152 |
| | 13-66-19 |
| 1551 098. . | 13-66-139 |
| 1551 766. . . | 13-64-5 |
| 1552 291. . . | 10-07-8 |
| 1553 086. . . | 14-35-1 |
| 1554 347. . . . | 5-62-1 |
| 1554 593. . . . | 6-13-4 |
| 1555 419. . . . | 7-03-1 |
| 1556 082. . | 21-138-26 |
| 1556 111. . | 21-133-22 |
| 1556 112. . | 21-133-20 |
| 1556 385. . . | 19-02-15 |
| 1556 556. . . | 16-20-1 |
| 1556 638. . . | 16-20-1 |
| 1557 573. . . | 10-26-14 |
| 1557 575. . . | 10-26-27 |
| 1557 581. . . | 10-26-65 |
| 1557 584. . . | 10-26-37 |
| 1557 704. . . . | 9-45-6 |
| 1558 058. . . . | 7-03-1 |
| 1558 191. . . . | 5-55-1 |
| 1558 192. . . . | 5-55-1 |
| 1558 352. . . | 17-23-53 |
| | 17-29-21 |
| 1558 426. . . . | 7-03-1 |
| 1558 897. . . | 9-59-13 |
| 1559 026. . | 21-129-23 |
| 1559 029. . | 21-129-20 |
| 1559 106. . . | 21-05-22 |
| 1559 108. | 21-139-149 |
| 1559 212. . | 21-139-38 |
| 1559 275. . | 21-134-33 |



MyMopar.com

| PART NUMBER | CODE |
|---|---|
| 1559 331. . | 21-135-33 |
| 1559 332. . | 21-134-33 |
| 1559 341. . | .21-85-59 |
| 1559 342. . | .21-85-76 |
| 1559 377. . | 21-117-24 |
| | 21-139-151 |
| 1559 440. . | 21-135-25 |
| 1559 470. . | 21-133-30 |
| 1559 471. . | 21-133-30 |
| 1559 472. . | 21-133-30 |
| 1559 480. . | 21-136-47 |
| 1559 483. . | 21-139-84 |
| 1559 494. . | 21-138-13 |
| 1559 495. . | 21-138-19 |
| 1559 496. . | 21-138-13 |
| 1559 497. . | 21-138-13 |
| 1559 498. . | 21-138-15 |
| 1559 753. . . | 5-39-18 |
| 1566 038. . | 23-18-112 |
| 1567 835. . . | 3-19-1 |
| 1567 900. . . | 3-19-1 |
| 1569 909. . . | .21-09-23 |
| 1570 956. . . | .24-28-71 |
| | 24-28-79 |
| 1571 028. . . | 1-82-30 |
| 1571 464. . . | .8-29-146 |
| 1578 269. . . | .23-64-60 |
| 1594 834. . | 23-47-432 |
| 1594 992. . . | .23-67-20 |
| 1594 993. . | 23-67-102 |
| 1594 995. . | 23-67-100 |
| 1595 160. . . | .1-48-555 |
| 1602 532. . . | .23-14-23 |
| 1603 360. . . | .21-118-6 |
| 1603 361. . . | .21-118-6 |
| 1603 362. . . | .21-118-6 |
| 1603 363. . . | .21-118-6 |
| 1603 364. . . | 11-08-1 |
| 1603 397. . . | 16-07-4 |
| 1603 398. . . | 16-03-1 |
| 1604 116. . . | 1-48-90 |
| | 24-01-26 |
| 1604 243. . . | .23-67-62 |
| 1604 921. . . | .8-33-118 |
| 1605 271. . | 24-28-200 |
| 1605 299. . . | .23-67-80 |
| 1605 602. . | 23-67-202 |
| 1605 604. . . | .23-67-82 |
| 1609 381. . . | .23-21-18 |
| 1609 540. . . | .23-21-15 |
| 1610 759. . . | 14-35-1 |
| 1610 881. . . | 14-35-1 |
| 1610 954. . . . | 6-35-8 |
| 1613 090. . . | 8-33-19 |
| 1613 388. . . | 2-14-13 |
| 1613 409. . . | .22-06-18 |
| 1613 416. . . | .22-08-57 |
| 1613 782. . . | 9-48-43 |
| 1614 385. . . | .17-23-52 |
| 1614 579. . . . | 6-50-6 |
| | 6-52-15 |
| 1614 666. . . | 9-39-17 |
| 1614 894. . . . | 5-71-2 |
| 1615 349. . . | 22-09-1 |
| 1615 350. . . | 22-09-1 |
| 1615 351. . . | 22-09-1 |
| 1615 352. . . | 22-09-1 |
| 1615 353. . . | 22-09-1 |
| 1615 354. . . | 22-09-1 |
| 1615 460. . . . | 5-13-9 |
| 1616 185. . . | .16-03-20 |
| 1616 746. . . | .13-64-13 |
| | 13-66-17 |
| 1616 915. . . . | 5-47-4 |
| 1617 187. . . | .14-02-12 |
| | 14-07-18 |
| 1617 379. . . . | 5-43-5 |
| 1618 157. . . | 14-35-1 |
| 1618 176. . . | 14-35-1 |
| 1618 220. . . | 14-35-1 |
| 1618 610. . . | .19-58-30 |
| 1618 611. . . | .19-58-31 |
| 1618 650. . . . | 9-48-6 |
| 1618 666. . . . | 9-17-5 |
| 1618 668. . . | 7-48-22 |
| 1618 671. . . . | 9-43-9 |
| 1618 683. . . | 9-23-18 |
| 1618 686. . . | 9-07-17 |
| 1618 695. . . | 9-03-10 |
| 1618 696. . . | 9-03-10 |
| 1618 701. . . | 9-31-10 |
| 1618 717. . . | 9-17-13 |
| 1618 718. . . . | 9-15-2 |
| 1618 732. . . | 9-15-10 |
| 1618 736. . . . | 9-20-1 |
| 1618 738. . . . | 9-36-5 |
| 1618 739. . . . | 9-36-5 |
| 1618 740. . . . | 9-36-5 |
| 1618 848. . . . | 6-22-1 |
| 1618 949. . . | 10-07-6 |
| 1618 950. . . | 10-09-1 |
| 1619 366. . . | .21-117-1 |
| 1619 370. | .21-136-235 |
| 1619 392. . | 21-133-22 |
| 1619 627. . . | 9-48-56 |
| 1619 636. . . | 9-39-16 |
| 1619 700. . . | 22-06-2 |
| 1619 701. . . | 22-06-1 |
| 1619 702. . . | 22-06-2 |
| 1619 703. . . | 22-06-1 |
| 1622 064. . . | 1-48-24 |
| 1623 132. . . | 8-11-12 |
| 1624 079. . . | 15-09-4 |
| 1624 506. . . . | 7-08-7 |
| 1624 582. . . | 12-06-3 |
| 1626 973. . . | .8-37-199 |
| | 8-39-4 |
| | 8-39-15 |
| 1627 108. . | 23-41-138 |
| 1627 125. . . | 1-87-45 |
| 1627 273. . . | .23-67-16 |
| 1630 241. . . | 9-39-14 |
| 1630 472. . . | 14-30-2 |
| 1630 726. . | 21-118-40 |
| 1630 727. . | 21-118-40 |
| 1630 729. . | 21-118-40 |
| 1630 812. . | 21-131-40 |
| 1630 878. . . | 21-25-6 |
| 1630 896. . | 21-136-15 |
| 1631 338. . . | 14-35-6 |
| 1631 353. . . | 14-35-8 |
| 1631 368. . . | 14-30-7 |
| 1631 502. . . | 14-43-5 |
| 1632 041. . . | .21-09-29 |
| 1632 044. . . | 21-39-3 |
| 1632 106. . . | 9-43-14 |
| 1632 280. . . . | 9-08-5 |
| 1632 522. . . . | 9-16-6 |
| 1632 523. . . . | 9-16-6 |
| 1632 524. . . . | 9-16-6 |
| 1632 525. . . . | 9-16-6 |
| 1632 526. . . . | 9-16-6 |
| 1632 586. . . . | 7-03-1 |
| 1632 808. . . | .19-46-10 |
| 1633 050. . . | .22-05-14 |
| 1633 051. . . | .22-05-14 |
| 1633 052. . . | .22-05-14 |
| 1633 053. . . | .22-05-14 |
| 1633 092. . . . | 5-55-1 |
| 1633 093. . . . | 5-55-1 |
| 1633 106. . . . | 5-71-2 |
| 1633 111. . . . | 5-22-8 |
| 1633 663. . . | 21-19-2 |
| 1633 669. . . | .21-09-19 |
| 1633 676. . . | .21-85-76 |
| 1633 718. . . | 21-09-5 |
| 1633 728. . | 21-133-15 |
| 1633 731. . | 21-129-10 |
| 1633 745. . | 21-136-20 |
| 1633 747. . . | .21-137-5 |
| 1633 748. . | 21-137-22 |
| 1633 750. . | 21-137-13 |
| 1633 761. . . | 21-15-2 |
| 1633 762. . . | .21-14-33 |
| 1633 763. . . | .21-15-33 |
| 1633 842. . | 21-133-35 |
| 1633 843. . | 21-133-36 |
| 1633 928. . . . | 3-08-1 |
| 1633 937. . . . | 3-08-2 |
| 1633 959. . . . | 3-07-1 |
| 1633 960. . . . | 3-06-6 |
| 1633 961. . . . | 3-07-2 |
| 1634 288. . . . | 7-05-1 |
| 1634 447. . . | 10-26-8 |
| 1634 508. . . . | 6-24-6 |
| 1634 511. . . . | 6-19-2 |
| 1634 619. . . . | 2-07-2 |
| 1634 701. . . | 14-30-2 |
| 1634 722. . . . | 9-48-6 |
| 1634 817. . . . | 7-45-2 |
| 1634 984. . . . | 3-03-3 |
| 1635 092. . . | 16-03-19 |
| 1635 098. . . | 16-03-20 |
| 1635 273. . . | 21-04-2 |
| 1635 282. . . | 21-24-2 |
| 1635 290. . . | 21-12-1 |
| 1635 293. . . | 21-12-2 |
| | 21-24-22 |
| 1635 299. . . | 21-85-[illegible] |
| 1635 300. . . | 21-85-5 |
| 1635 301. . . | 21-85-5 |
| 1635 302. . . | 21-85-5 |
| 1635 303. . . | 21-85-5 |
| 1635 304. . . | .21-85-76 |
| 1635 344. . . | 5-27-35 |
| 1635 588. . . | .17-23-52 |
| 1635 600. . . | 3-01-28 |
| 1635 783. . . | 7-45-31 |
| 1636 010. . . | 2-10-76 |
| 1636 017. . . | 2-10-76 |
| 1636 259. . . . | 4-29-1 |
| 1636 262. . | 21-133-38 |
| 1636 264. . | 21-134-38 |
| 1636 276. . | 21-133-15 |
| 1636 281. | .21-136-214 |
| 1636 286. . . | .21-119-3 |
| 1636 289. . | 21-133-22 |
| 1636 290. . . | .21-05-35 |
| | 21-133-20 |
| 1636 303. . . | .21-131-6 |
| 1636 307. . | 21-134-50 |
| 1636 311. . . | .21-131-5 |
| 1636 314. . | 21-134-51 |
| 1636 315. . | 21-133-43 |
| | 21-136-68 |
| 1636 316. . | 21-133-43 |
| | 21-136-68 |
| 1636 317. . | 21-133-43 |
| | 21-136-68 |
| 1636 319. . . | .21-135-9 |
| 1636 324. . | 21-129-33 |
| 1636 326. . | 21-133-25 |
| 1636 356. . | 21-133-25 |
| 1636 357. . | 21-134-40 |
| 1636 358. . | 21-134-40 |
| 1636 362. . . | .21-136-5 |
| 1636 364. . | 21-133-20 |
| 1636 365. . | 21-133-20 |
| 1636 367. . | 21-136-80 |
| 1636 376. . | 21-134-30 |
| 1636 396. . | 21-131-12 |
| 1636 406. . . | 21-85-4 |
| 1636 407. . . | 21-85-5 |
| 1636 408. . . | 21-85-5 |
| 1636 409. . . | 21-85-5 |
| 1636 410. . . | 21-85-5 |
| 1636 418. | .21-136-225 |
| 1636 423. . | 21-139-30 |
| 1636 446. . | 21-137-33 |
| 1636 448. . . | .21-119-5 |
| 1636 452. . . | 16-20-1 |
| 1636 461. . | 21-138-13 |
| 1636 462. . | 21-138-13 |
| 1636 464. . | 21-138-19 |
| 1636 465. . | 21-138-19 |
| 1636 468. . | 21-129-30 |
| 1636 469. . | 21-133-45 |
| 1636 470. . . | .21-137-8 |
| | 21-138-38 |
| 1636 523. . | 21-30-371 |
| 1636 570. . . | 11-06-8 |
| 1637 031. . . | 17-19-3 |
| 1637 339. . . | .22-01-42 |
| 1637 342. . . | 22-08-5 |
| 1637 502. . . | 19-58-9 |
| 1637 563. . . . | 9-39-6 |
| 1637 564. . . . | 9-39-6 |
| 1637 565. . . . | 9-39-6 |
| 1637 721. . . . | 9-42-1 |
| 1637 724. . . | 7-45-31 |
| 1637 773. . . | 5-27-10 |
| 1637 779. . . . | 5-27-2 |
| | 6-38-3 |
| 1637 782. . . . | 5-29-1 |
| 1637 784. . . . | 5-47-4 |
| 1637 793. . . | .5-100-35 |
| 1637 805. . . . | 5-47-6 |
| 1638 151. . . | 16-16-6 |
| 1638 291. . . | 21-85-4 |
| 1638 455. . | 21-139-24 |
| 1638 461. . | 21-138-29 |
| 1638 462. . | 21-134-30 |
| 1638 544. . | 21-134-38 |
| 1638 562. . | 21-137-20 |
| 1638 565. . | 21-137-32 |
| 1638 633. . | 21-139-12 |
| 1638 635. . | 21-139-41 |
| 1638 664. . | 21-129-13 |
| 1638 667. . | 21-134-30 |
| 1638 670. . . | .21-129-8 |
| 1638 671. . . | .21-129-8 |
| 1638 685. . | 21-30-370 |
| 1638 686. . | 21-30-370 |
| 1638 689. . . | .21-139-5 |
| 1638 691. | .21-139-193 |
| 1638 998. . . . | 6-10-2 |
| 1639 171. . . | 2-14-15 |
| 1639 182. . . | 14-65-4 |
| 1639 477. . . | .13-64-10 |
| 1639 597. . . | 9-59-15 |



MyMopar.com

| PART NUMBER | CODE |
|---|---|
| 1639 652. . . | 19-02-18 |
| 1639 947. . . | 9-39-21 |
| 1639 961. . . | 15-09-4 |
| 1639 970. . | 21-30-345 |
| 1639 975. . | 21-30-370 |
| 1641 511. . . | 1-108-28 |
| 1641 512. . . | 1-108-5 |
| 1641 578. . | 23-58-396 |
| 1641 579. . | 23-58-395 |
| 1641 586. . | 23-58-430 |
| 1641 590. . | 23-58-375 |
| 1641 592. . | 23-58-430 |
| 1641 650. . | 23-58-381 |
| 1642 029. . . | 23-67-80 |
| 1642 384. . | 23-67-163 |
| 1642 386. . . | 8-53-266 |
| 1642 475. . . | 8-20-10 |
| 1642 477. . . | 1-88-118 |
| | 8-53-266 |
| 1643 118. . | 21-139-94 |
| 1643 151. . . . | 9-09-2 |
| 1643 152. . . . | 9-09-2 |
| 1643 153. . . . | 9-09-2 |
| 1643 155. . . . | 9-09-2 |
| 1643 168. . . . | 9-10-5 |
| | 9-10-6 |
| | 9-10-8 |
| 1643 169. . . . | 9-10-7 |
| 1643 170. . . . | 9-10-9 |
| 1643 243. . . | 21-131-1 |
| 1643 259. . | 21-133-37 |
| 1643 721. . | 23-63-131 |
| 1643 973. . . . | 3-19-1 |
| 1645 615. . . | 23-47-75 |
| 1647 087. . . | 23-26-47 |
| 1647 239. . . | 23-26-23 |
| 1648 240. . | 24-25-157 |
| 1648 340. . | 23-58-357 |
| 1648 380. . . | 24-28-60 |
| 1648 394. . | 24-28-175 |
| 1648 430. . . | 24-28-73 |
| 1648 460. . . | 24-28-76 |
| 1649 628. . . | 8-35-122 |
| | 23-17-25 |
| 1651 394. . . | 23-15-1 |
| 1651 395. . . | 23-15-1 |
| 1651 400. . . | 23-15-1 |
| | 23-15-3 |
| 1651 416. . . | 23-39-34 |
| 1651 417. . . | 23-39-34 |
| 1651 431. . | 23-66-135 |
| 1651 493. . | 23-14-153 |
| 1652 092. . | 23-54-172 |
| 1653 463. . . | 21-138-2 |
| 1658 328. . . | 1-88-123 |
| 1658 343. . . | 8-55-57 |
| 1658 535. . . | 8-27-300 |
| 1658 630. . | 24-28-132 |
| 1658 638. . | 24-25-156 |
| 1658 766. . . | 24-28-19 |
| 1658 830. . . . | 8-12-3 |
| | 8-31-16 |
| 1658 838. . . | 8-36-96 |
| 1658 861. . . . | 8-28-3 |
| 1661 046. . . | 1-108-17 |
| 1662 137. . . | 8-28-74 |
| 1662 294. . . | 8-36-96 |
| 1663 097. . . . | 8-28-3 |
| 1665 085. . . | 8-36-47 |
| 1670 299. . . | 19-27-55 |
| 1670 320. . . . | 2-03-3 |
| 1670 356. . . | 19-19-36 |
| 1670 357. . . | 19-19-5 |
| 1670 476. . . | 9-43-26 |
| 1670 515. . . | 9-58-12 |
| 1670 566. . . | 8-28-15 |
| 1670 694. . . | 14-86-85 |
| 1670 932. . . | 19-46-19 |
| 1671 340. . . | 22-06-18 |
| 1671 341. . . | 22-08-57 |
| 1671 362. . . . | 2-03-3 |
| 1671 363. . . . | 2-03-3 |
| 1671 405. . . | 2-10-68 |
| 1671 418. . . | 2-10-58 |
| 1671 419. . . | 2-10-58 |
| 1671 437. . . | 17-29-5 |
| 1671 569. . . . | 5-47-7 |
| 1671 587. . . | 19-02-21 |
| 1671 610. . . | 14-88-27 |
| 1671 650. . . | 5-111-17 |
| 1671 702. . . | 19-27-33 |
| 1671 763. . . | 21-05-12 |
| | 21-22-2 |
| 1672 049. . . | 16-14-7 |
| 1672 050. . . | 16-14-9 |
| 1672 051. . . | 16-16-1 |
| 1672 053. . . | 16-16-43 |
| 1672 066. . . | 21-131-6 |
| 1672 078. | 21-139-190 |
| 1672 081. . | 21-133-40 |
| 1672 083. . | 21-135-35 |
| 1672 122. . . | 21-129-5 |
| 1672 126. . | 21-134-40 |
| 1672 129. . | 21-139-36 |
| 1672 135. . . | 21-135-5 |
| 1672 150. . | 21-139-41 |
| 1672 194. . . | 21-04-11 |
| | 21-05-2 |
| | 21-19-2 |
| 1672 213. . | 21-30-370 |
| 1672 215. . | 21-30-370 |
| 1672 287. . | 21-129-33 |
| | 21-137-8 |
| | 21-137-202 |
| 1672 296. . . | 21-118-7 |
| 1672 315. . . | 21-118-7 |
| 1672 323. | 21-139-193 |
| 1672 358. . | 21-139-41 |
| 1672 359. . | 21-131-10 |
| 1672 361. . | 21-131-29 |
| 1672 362. . | 21-131-20 |
| 1672 363. . | 21-131-20 |
| 1672 364. . | 21-131-25 |
| 1672 365. . | 21-131-31 |
| 1672 556. . . . | 7-43-5 |
| 1672 616. . . | 14-13-5 |
| 1672 960. . . | 2-08-62 |
| | 2-10-67 |
| 1672 961. . . | 2-10-67 |
| 1672 962. . . | 2-10-58 |
| 1672 963. . . | 2-10-58 |
| 1672 964. . . | 17-29-5 |
| 1672 980. . . | 19-27-50 |
| 1672 988. . . | 17-29-16 |
| 1672 989. . . | 17-29-13 |
| 1673 008. . . | 19-27-50 |
| 1673 045. . . | 2-07-28 |
| 1673 060. . . | 17-29-11 |
| 1673 065. . . | 17-29-10 |
| 1673 090. . . | 17-29-15 |
| 1673 184. . | 21-30-394 |
| 1673 194. . . | 21-05-1 |
| 1673 324. . . | 22-06-10 |
| 1673 367. . . | 3-03-25 |
| 1673 375. . . . | 3-33-1 |
| 1673 379. . . . | 3-19-1 |
| 1673 380. . . . | 3-19-1 |
| 1673 381. . . . | 3-19-1 |
| 1673 382. . . . | 3-19-1 |
| 1673 388. . . . | 3-19-1 |
| 1673 531. . . | 17-19-20 |
| 1673 620. . | 5-100-180 |
| 1673 634. . | 5-100-120 |
| 1673 645. . . . | 7-03-1 |
| 1673 646. . . . | 9-45-1 |
| 1673 838. . . | 3-35-14 |
| 1673 921. . | 21-30-370 |
| 1673 948. . . | 19-46-9 |
| 1673 974. . . | 19-02-17 |
| 1674 080. . . . | 5-71-1 |
| 1674 081. . . . | 5-72-1 |
| 1674 082. . . | 13-18-32 |
| 1674 122. . | 5-100-160 |
| 1674 128. . | 5-100-175 |
| 1674 302. . | 5-100-111 |
| 1674 602. . . . | 7-41-4 |
| 1674 677. . . . | 7-03-1 |
| 1674 679. . . | 7-46-10 |
| 1674 746. . . | 7-02-16 |
| 1674 942. . | 5-100-179 |
| 1674 944. . | 5-100-127 |
| 1674 949. . | 5-100-155 |
| | 5-100-161 |
| 1674 950. . | 5-100-156 |
| 1674 952. . | 5-100-159 |
| 1674 954. . | 5-100-162 |
| 1674 955. . | 5-100-160 |
| 1674 957. . | 5-100-181 |
| 1674 963. . . | 5-113-17 |
| 1674 965. . | 5-100-202 |
| 1674 966. . | 5-100-206 |
| 1674 968. . | 5-100-206 |
| 1674 970. . | 5-100-145 |
| 1674 972. . | 5-100-148 |
| 1674 974. . | 5-100-148 |
| 1674 975. . | 5-100-210 |
| 1674 989. . | 5-100-171 |
| 1674 991. . | 5-100-181 |
| 1674 993. . | 5-100-121 |
| 1675 001. . . | 5-100-1 |
| 1675 003. . . | 5-100-25 |
| 1675 009. . | 5-100-137 |
| 1675 013. . | 5-100-143 |
| 1675 099. . . | 5-100-27 |
| 1675 104. . | 5-100-174 |
| 1675 109. . | 5-100-168 |
| 1675 112. . | 5-100-176 |
| 1675 113. . | 5-100-177 |
| 1675 117. . | 5-100-178 |
| 1675 118. . | 5-100-159 |
| 1675 122. . | 5-100-160 |
| 1675 123. . | 5-100-163 |
| 1675 124. . | 5-100-158 |
| 1675 128. . | 5-100-175 |
| 1675 132. . | 5-100-208 |
| 1675 137. . | 5-100-121 |
| 1675 142. . . | 5-113-17 |
| 1675 143. . | 5-100-146 |
| | 5-100-188 |
| 1675 146. . | 5-100-207 |
| 1675 213. . . | 5-100-2 |
| 1675 214. . . | 5-27-22 |
| 1675 218. . . . | 5-47-3 |
| 1675 223. . | 5-100-105 |
| 1675 242. . . | 6-52-10 |
| 1675 245. . . . | 6-24-1 |
| 1675 246. . . . | 6-24-1 |
| 1675 269. . . | 19-19-7 |
| 1675 271. . . | 19-19-40 |
| 1675 448. . . . | 3-32-1 |
| 1675 449. . . . | 3-32-1 |
| 1675 485. . . . | 3-20-1 |
| 1675 771. . . | 19-46-23 |
| 1675 821. . . | 17-24-28 |
| 1675 958. . . | 8-27-27 |
| 1676 031. . . . | 7-44-3 |
| 1676 197. . . | 21-14-6 |
| 1676 198. . . | 21-39-3 |
| 1676 200. . . | 21-42-42 |
| 1676 486. . | 5-100-130 |
| 1676 487. . | 5-100-173 |
| 1676 629. . | 21-30-325 |
| 1676 692. . . | 14-35-1 |
| 1678 280. . . . | 7-03-1 |
| 1685 757. . | 5-100-113 |
| 1685 782. . . | 23-06-16 |
| 1686 107. . . . | 7-12-1 |
| 1686 198. . . . | 7-13-2 |
| 1686 412. . . . | 7-08-2 |
| 1686 414. . . . | 7-08-2 |
| 1686 451. . . | 7-08-13 |
| 1686 453. . . | 7-08-13 |
| 1686 914. . . | 12-04-33 |
| 1688 207. . . | 8-35-41 |
| 1688 542. . . | 1-88-206 |
| | 24-24-8 |
| | 24-24-137 |
| 1688 692. . | 23-54-158 |
| 1688 919. . | 23-41-138 |
| 1689 022. . . | 23-41-11 |
| | 23-47-423 |
| | 23-54-176 |
| | 23-58-379 |
| 1689 041. . . . | 8-20-9 |
| 1689 167. . | 23-41-139 |
| 1689 253. . . | 1-88-162 |
| 1689 313. . | 24-28-132 |
| 1689 538. . . | 1-21-22 |
| | 8-39-15 |
| | 8-40-16 |
| | 8-41-36 |
| | 8-50-156 |
| | 14-02-38 |
| | 24-28-196 |
| 1689 592. . . | 1-87-70 |
| 1689 670. . . | 24-01-33 |
| | 24-28-76 |
| 1689 692. . . | 1-48-46 |
| 1690 329. . . | 23-39-2 |
| | 23-39-44 |
| 1690 440. . . | 23-36-66 |
| 1690 441. . . | 23-36-66 |
| 1690 742. . . | 23-20-19 |
| 1690 804. . . | 23-59-61 |
| 1690 805. . . | 23-59-61 |
| 1690 871. . | 23-66-135 |
| 1690 874. . . | 23-63-33 |
| 1690 937. . . | 23-39-45 |
| 1690 950. . . | 23-09-17 |
| 1690 952. . | 23-64-242 |
| 1690 953. . | 23-64-242 |
| 1691 076. . | 23-64-308 |
| 1691 077. . | 23-64-308 |
| 1691 078. . | 23-64-308 |
| 1691 079. . | 23-64-308 |
| 1691 086. . . | 23-09-9 |
| 1691 087. . . | 23-09-9 |
| 1691 100. . . | 23-39-33 |
| 1691 104. . . | 23-64-12 |
| 1691 105. . . | 23-64-12 |
| 1691 107. . | 23-34-225 |
| 1691 152. . | 23-64-308 |



MyMopar.com

| PART NUMBER | CODE |
|---|---|
| 1691 153. . | 23-64-308 |
| 1691 156. . | 23-64-308 |
| 1691 157. . | 23-64-308 |
| 1691 174. . | 23-64-308 |
| 1691 175. . | 23-64-308 |
| 1691 196. . | 23-64-308 |
| 1691 197. . | 23-64-308 |
| 1691 238. . | 23-64-311 |
| 1691 239. . | 23-64-311 |
| 1691 240. . | 23-64-311 |
| 1691 241. . | 23-64-311 |
| 1691 397. . . | 23-58-75 |
| 1691 400. . . | 23-58-75 |
| 1691 415. . . | 23-58-75 |
| 1691 616. . | 23-64-280 |
| 1691 617. . | 23-64-280 |
| 1691 899. . . | 23-19-85 |
| 1691 902. . . | 23-58-76 |
| 1691 903. . . | 23-58-76 |
| 1691 911. . | 23-58-229 |
| 1691 946. . | 23-58-394 |
| 1691 947. . | 23-58-394 |
| 1691 948. . | 23-58-472 |
| 1691 949. . | 23-58-472 |
| 1691 966. . . | 23-39-47 |
| 1691 967. . . | 23-39-47 |
| 1692 142. . | 23-34-236 |
| 1692 143. . | 23-34-236 |
| 1692 152. . . | 23-09-58 |
| 1692 153. . . | 23-09-58 |
| 1692 154. . . | 23-39-18 |
| 1692 155. . . | 23-39-18 |
| 1692 172. . . | 23-20-19 |
| 1692 173. . . | 23-20-19 |
| 1692 191. . . | 23-23-66 |
| 1692 658. . . | 8-52-330 |
| 1692 659. . . | 8-52-330 |
| 1692 678. . . . | 8-20-9 |
| 1694 182. . . | 23-26-63 |
| 1695 602. . . | 15-13-2 |
| 1696 605. . . | 15-13-6 |
| 1697 607. . . | 23-09-2<br>23-09-10 |
| 1698 140. . . | 23-02-42 |
| 1698 845. . . | 8-35-122 |
| 1704 061. . . | 23-67-91 |
| 1704 062. . . | 23-67-48 |
| 1704 063. . . | 23-67-48 |
| 1704 066. . . | 23-67-49<br>23-67-85 |
| 1704 283. . | 21-113-24 |
| 1704 294. . . . | 8-28-3 |
| 1704 295. . . | 8-28-74 |
| 1704 467. . . | 8-42-10 |
| 1704 482. . | 21-113-29 |
| 1704 689. . . | 8-33-90 |
| 1704 768. . . | 23-67-5 |
| 1704 769. . . | 23-67-5 |
| 1704 875. . . | 8-05-12<br>8-42-10 |
| 1706 470. . | 23-58-605 |
| 1707 384. . | 23-14-153 |
| 1708 248. . | 23-04-229 |
| 1708 914. . | 23-58-336 |
| 1708 998. . | 23-64-237 |
| 1717 458. . . | 23-54-31 |
| 1730 007. . . | 6-38-26 |
| 1730 009. . . . | 5-29-1 |
| 1730 014. . . | 6-35-12 |
| 1730 015. . . . | 6-35-3 |
| 1730 019. . . . | 6-38-7 |
| 1730 077. . . . | 5-34-1 |
| 1730 087. . . | 14-86-83 |
| 1730 095. . . | 14-72-47 |
| 1730 155. . . | 7-02-16 |
| 1730 160. . . | 3-01-25 |
| 1730 183. . . | 17-19-10 |
| 1730 272. . | 13-64-100 |
| 1730 281. . . | 13-64-5 |
| 1730 366. . . . | 7-14-9 |
| 1730 587. . . | 24-25-85 |
| 1730 826. . . | 22-03-2 |
| 1730 827. . . | 22-03-2 |
| 1730 978. . . | 8-33-19 |
| 1730 984. . . | 19-46-26 |
| 1730 985. . . | 19-19-35 |
| 1731 118. . . | 19-48-16 |
| 1731 143. . | 21-30-340 |
| 1731 202. . . . | 5-47-2 |
| 1731 214. . . | 6-35-13 |
| 1731 225. . . | 5-39-20 |
| 1731 226. . . | 5-39-27 |
| 1731 227. . . | 5-39-21 |
| 1731 232. . . | 6-50-10 |
| 1731 233. . . | 6-50-12 |
| 1731 234. . . | 6-50-11 |
| 1731 264. . . | 2-08-61 |
| 1731 275. . . | 17-29-18 |
| 1731 341. . . | 17-29-15 |
| 1731 402. . . | 2-10-58 |
| 1731 403. . . | 2-10-58 |
| 1731 414. . . | 19-27-2 |
| 1731 415. . . | 19-27-2 |
| 1731 467. . . | 8-28-36 |
| 1731 525. . . . | 9-07-8 |
| 1731 738. . . | 3-01-33 |
| 1731 769. . . | 3-01-30 |
| 1731 789. . . | 3-01-34 |
| 1731 796. . . | 17-11-10 |
| 1731 798. . . | 17-11-10 |
| 1731 833. . . | 21-139-4 |
| 1731 860. . . . | 9-46-4 |
| 1732 058. . | 21-139-50 |
| 1732 063. . . | 21-85-5 |
| 1732 099. . | 21-137-35 |
| 1732 100. . | 21-137-47 |
| 1732 101. . | 21-137-44 |
| 1732 102. . | 21-137-41 |
| 1732 113. . . | 21-85-5 |
| 1732 116. . | 21-133-36 |
| 1732 122. . . | 21-133-7 |
| 1732 183. . | 21-139-47 |
| 1732 294. . . | 22-03-1 |
| 1732 295. . . | 22-03-1 |
| 1732 296. . . | 22-03-2 |
| 1732 297. . . | 22-03-2 |
| 1732 300. . . | 22-06-5 |
| 1732 338. . . | 22-08-5 |
| 1732 512. . . | 22-03-2 |
| 1732 513. . . | 22-03-2 |
| 1732 699. . . | 16-02-1 |
| 1732 924. . | 19-54-183 |
| 1732 946. . | 19-54-181 |
| 1732 953. . . | 19-54-32 |
| 1733 218. . . | 19-01-24 |
| 1733 488. . . | 19-54-86 |
| 1733 562. . . | 19-02-69 |
| 1733 577. . . | 19-19-4 |
| 1733 588. . . | 19-14-13 |
| 1733 593. . . | 19-01-52 |
| 1733 594. . . | 19-15-60 |
| 1733 602. . . | 19-14-18 |
| 1733 603. . . | 19-19-35 |
| 1733 604. . . | 19-19-24 |
| 1733 612. . . | 19-57-13 |
| 1733 615. . . | 19-19-26 |
| 1733 625. . . | 19-14-19 |
| 1733 627. . . | 19-19-32 |
| 1733 763. . . | 19-01-8 |
| 1733 790. . . | 19-19-30 |
| 1733 791. . . | 19-01-51 |
| 1733 805. . . . | 7-06-3 |
| 1733 932. . . . | 9-03-4 |
| 1734 028. . . | 14-11-25 |
| 1734 030. . . | 14-11-20 |
| 1734 078. . . | 19-19-19 |
| 1734 118. . . | 16-02-1 |
| 1734 159. . . | 16-04-1 |
| 1734 162. . . | 22-03-2 |
| 1734 163. . . | 22-03-2 |
| 1734 266. . . | 2-08-61 |
| 1734 267. . . | 2-08-75 |
| 1734 315. . . | 17-29-20 |
| 1734 321. . . | 2-10-59 |
| 1734 326. . . | 19-27-45 |
| 1734 327. . . | 19-27-34 |
| 1734 330. . . | 19-27-31 |
| 1734 335. . . | 19-27-31 |
| 1734 341. . . | 2-10-60 |
| 1734 347. . . | 2-10-72 |
| 1734 502. . . | 13-54-4 |
| 1734 529. . . . | 9-71-5 |
| 1734 837. . . | 24-25-93<br>24-25-95 |
| 1734 913. . . | 19-54-29 |
| 1734 957. . . . | 7-41-4 |
| 1735 128. . . | 13-54-15 |
| 1735 464. . . | 2-14-12 |
| 1735 470. . . | 2-07-28 |
| 1735 620. . . | 5-100-2 |
| 1735 640. . | 5-100-207 |
| 1735 716. . . | 21-16-3 |
| 1735 718. . . | 21-04-1 |
| 1735 849. . . | 8-28-36 |
| 1735 850. . . | 8-28-36 |
| 1735 939. . . . | 7-02-1 |
| 1736 009. . . | 13-72-2 |
| 1736 012. . . | 9-58-13 |
| 1736 163. . . | 21-118-7 |
| 1736 187. . | 21-136-210 |
| 1736 193. . | 21-135-25 |
| 1736 194. . . | 21-134-5<br>21-135-50 |
| 1736 207. . | 21-136-230 |
| 1736 214. . | 21-137-47 |
| 1736 215. . | 21-136-17<br>21-136-52 |
| 1736 216. . . | 21-117-1 |
| 1736 217. . | 21-136-20 |
| 1736 218. . . | 21-137-5 |
| 1736 219. . | 21-137-13 |
| 1736 221. . | 21-137-11 |
| 1736 222. . | 21-137-22 |
| 1736 223. . | 21-137-19 |
| 1736 224. . . | 21-137-8 |
| 1736 226. . | 21-137-200 |
| 1736 233. . | 21-137-202 |
| 1736 333. . | 21-133-15 |
| 1736 376. . . | 21-05-18 |
| 1736 423. . | 21-136-41 |
| 1736 424. . | 21-138-23 |
| 1736 427. . | 21-136-15<br>21-136-41 |
| 1736 432. . . | 21-04-12<br>21-05-8 |
| 1736 433. . . | 21-04-12<br>21-05-8 |
| 1736 436. . . | 9-46-90 |
| 1736 468. . . | 21-138-9 |
| 1736 519. . | 21-136-200 |
| 1736 676. . . | 22-08-5 |
| 1736 990. . . | 13-72-2 |
| 1736 993. . . | 3-01-35 |
| 1736 997. . . | 17-23-56 |
| 1737 157. . | 5-100-110 |
| 1737 158. . | 5-100-113 |
| 1737 167. . . | 5-47-10 |
| 1737 585. . . . | 4-26-1 |
| 1737 620. . . . | 9-20-1 |
| 1737 621. . . . | 9-08-5 |
| 1737 622. . . . | 9-17-5 |
| 1737 645. . . . | 9-43-1 |
| 1737 646. . . . | 9-43-1 |
| 1737 690. . . . | 9-31-4 |
| 1737 694. . . . | 9-31-5 |
| 1737 695. . . . | 9-31-7 |
| 1737 698. . . . | 9-39-6 |
| 1737 705. . . . | 7-44-3 |
| 1737 709. . . | 9-50-16 |
| 1737 718. . . | 10-07-10 |
| 1737 722. . . | 10-14-18 |
| 1737 725. . . | 10-09-7 |
| 1737 727. . . | 10-07-8 |
| 1737 742. . . | 10-22-15 |
| 1737 743. . . | 10-22-15 |
| 1737 744. . . | 10-22-15 |
| 1737 745. . . | 14-77-17 |
| 1737 756. . . . | 9-43-5 |
| 1737 757. . . . | 9-42-1 |
| 1737 760. . . | 8-27-26 |
| 1737 761. . . . | 7-44-4 |
| 1737 770. . . | 10-24-8 |
| 1737 771. . . | 9-23-18 |
| 1737 780. . . | 14-39-45 |
| 1738 206. . . | 19-19-28 |
| 1738 207. . . | 19-46-35 |
| 1738 221. . . . | 4-29-1 |
| 1738 235. . | 21-133-20 |
| 1738 261. . | 21-133-17 |
| 1738 262. . | 21-133-12 |
| 1738 263. . . | 9-46-130<br>21-118-42 |
| 1738 264. . | 21-118-38 |
| 1738 265. . | 21-129-12 |
| 1738 268. . . . | 5-46-1 |
| 1738 271. . . . | 5-27-1 |
| 1738 272. . . | 5-100-34 |
| 1738 329. . . | 24-25-84 |
| 1738 330. . . | 24-25-84 |
| 1738 414. . . | 24-25-10 |
| 1738 415. . . | 24-25-10 |
| 1738 635. . . | 14-65-4 |
| 1738 647. . | 19-54-180 |
| 1738 662. . | 19-54-181 |
| 1738 683. . | 19-54-188 |
| 1738 761. . . . | 3-19-1 |
| 1738 794. . . | 3-22-27 |
| 1738 795. . . | 3-22-27 |
| 1738 796. . . | 3-22-27 |
| 1738 797. . . | 3-22-27 |
| 1738 798. . . | 3-22-27 |
| 1738 799. . . | 3-22-27 |
| 1738 800. . . | 3-22-27 |
| 1738 802. . . | 3-22-27 |
| 1738 803. . . | 3-22-28 |
| 1738 805. . . | 3-22-28 |
| 1738 806. . . | 3-22-28 |
| 1738 807. . . | 3-22-28 |
| 1738 812. . . | 3-22-27 |
| 1738 813. . . | 3-22-27 |
| 1738 814. . . | 3-22-27 |
| 1738 815. . . | 3-22-27 |
| 1738 816. . . | 3-22-27 |



MyMopar.com

| PART NUMBER | CODE |
|---|---|
| 1738 817. . . | 3-22-27 |
| 1738 818. . . | 3-22-27 |
| 1738 819. . . | 3-22-27 |
| 1738 820. . . | 3-22-27 |
| 1738 826. . . | 3-22-26 |
| 1738 831. . . | 3-22-45 |
| 1739 049. . . | 12-04-12 |
| 1739 092. . . . | 6-13-4 |
| 1739 194. . . | 14-86-13 |
| 1739 196. . . | 14-86-24 |
| 1739 215. . . . | 5-62-1 |
| 1739 226. . . . | 5-52-3 |
| 1739 230. . . | 14-67-2 |
| | 14-89-57 |
| 1739 248. . . . | 5-57-2 |
| 1739 249. . . . | 5-62-1 |
| 1739 355. . . . | 8-36-4 |
| 1739 356. . . . | 9-41-4 |
| 1739 534. . . | 9-39-15 |
| 1739 547. . . | 14-29-6 |
| 1739 548. . . | 14-29-6 |
| 1739 594. . . | 9-43-10 |
| 1739 595. . . | 9-43-10 |
| 1739 600. . . . | 9-48-6 |
| 1739 604. . . | 10-09-5 |
| 1739 605. . . | 9-03-10 |
| 1739 606. . . | 9-03-10 |
| 1739 607. . . | 9-15-10 |
| 1739 608. . . . | 9-15-1 |
| 1739 612. . . . | 9-39-6 |
| 1739 613. . . . | 9-39-6 |
| 1739 614. . . . | 9-39-6 |
| 1739 616. . . . | 6-10-2 |
| 1739 619. . . | 10-26-5 |
| 1739 832. . | 5-100-138 |
| 1739 834. . | 5-100-139 |
| 1739 835. . | 5-100-141 |
| 1739 836. . | 5-100-140 |
| 1739 838. . | 5-100-144 |
| 1739 839. . | 5-100-15 |
| 1739 842. . | 5-100-20 |
| 1739 847. . | 5-100-127 |
| 1739 849. . | 5-100-186 |
| 1739 851. . | 5-100-206 |
| 1739 852. . . | 5-100-7 |
| 1739 853. . . | 5-100-8 |
| 1739 912. . . | 16-08-7 |
| 1739 913. . . | 16-10-1 |
| 1739 914. . . | 16-09-1 |
| 1739 915. . . | 16-14-1 |
| 1739 920. . . | 16-04-1 |
| 1739 923. . . | 16-03-7 |
| 1739 924. . . | 16-06-1 |
| 1739 926. . . | 16-06-3 |
| 1739 927. . . | 16-03-10 |
| 1739 930. . . | 16-02-1 |
| 1742 766. . . | 24-26-20 |
| 1743 634. . | 24-25-120 |
| 1744 767. . . | 24-26-26 |
| 1744 768. . | 24-28-322 |
| 1747 962. . | 24-25-258 |
| 1747 988. . | 24-25-252 |
| 1747 993. . | 24-25-121 |
| 1748 059. . . | 24-27-5 |
| 1748 066. . . | 24-28-26 |
| 1750 102. . . | 23-59-61 |
| 1750 103. . . | 23-59-61 |
| 1750 104. . . | 23-59-61 |
| 1750 105. . . | 23-59-61 |
| 1750 188. . | 23-34-236 |
| 1750 189. . | 23-34-236 |
| 1750 400. . | 23-58-333 |
| 1750 406. . | 23-58-473 |
| 1750 407. . | 23-58-473 |
| 1750 426. . . | 23-39-18 |
| 1750 427. . . | 23-39-18 |
| 1750 445. . | 23-34-116 |
| 1750 466. . . | 23-39-18 |
| 1750 467. . . | 23-39-18 |
| 1750 484. . . | 23-15-21 |
| 1750 490. . . | 23-09-2 |
| 1750 517. . . | 23-63-97 |
| 1750 537. . . | 23-64-12 |
| 1750 565. . . | 23-15-1 |
| | 23-15-3 |
| 1750 578. . . | 23-09-52 |
| 1750 579. . . | 23-09-52 |
| 1750 602. . . | 23-15-21 |
| 1750 603. . . | 23-15-21 |
| 1750 606. . . | 23-64-12 |
| 1750 609. . . | 23-64-12 |
| 1750 614. . . | 23-09-51 |
| 1750 615. . . | 23-09-51 |
| 1750 619. . | 23-58-257 |
| 1750 647. . | 23-58-487 |
| 1750 658. . . | 23-64-12 |
| 1750 659. . . | 23-64-12 |
| 1750 686. . . | 23-10-2 |
| 1750 724. . | 23-58-248 |
| 1750 726. . | 23-58-603 |
| 1750 747. . . | 22-20-80 |
| 1750 777. . | 23-58-232 |
| 1750 806. . . | 23-64-12 |
| 1750 816. . . | 23-09-52 |
| 1750 817. . . | 23-09-52 |
| 1750 854. . | 23-58-232 |
| 1750 855. . | 23-58-232 |
| 1750 991. . . | 23-19-76 |
| 1750 995. . . | 23-08-12 |
| 1751 000. . | 23-34-234 |
| 1751 001. . | 23-34-234 |
| 1751 002. . | 23-34-234 |
| 1751 003. . | 23-34-234 |
| 1751 008. . . | 23-61-98 |
| 1751 009. . . | 23-61-98 |
| 1751 033. . | 23-34-136 |
| 1751 056. . . | 23-09-52 |
| 1751 057. . . | 23-09-52 |
| 1751 094. . | 23-58-220 |
| 1751 130. . . | 23-19-76 |
| 1751 131. . . | 23-19-76 |
| 1751 156. . | 23-58-243 |
| 1751 173. . | 23-58-253 |
| 1751 182. . . | 15-03-5 |
| | 23-31-145 |
| 1751 206. . | 23-58-269 |
| 1751 207. . | 23-58-269 |
| 1751 208. . | 23-58-469 |
| 1751 209. . | 23-58-469 |
| 1751 210. . | 23-58-333 |
| 1751 262. . | 23-58-266 |
| 1751 264. . | 23-58-265 |
| 1751 323. . . | 23-23-36 |
| 1751 325. . . | 23-23-36 |
| 1751 328. . | 23-64-242 |
| 1751 329. . | 23-64-242 |
| 1751 489. . | 23-64-279 |
| 1751 492. . | 23-64-278 |
| 1751 538. . . | 23-42-16 |
| 1751 570. . . | 23-63-33 |
| 1751 571. . . | 23-63-33 |
| 1751 610. . | 23-63-104 |
| 1751 611. . | 23-63-104 |
| 1751 618. . . | 23-63-33 |
| 1751 619. . . | 23-63-33 |
| 1751 620. . . | 23-63-33 |
| 1751 621. . . | 23-63-33 |
| 1751 646. . . | 23-63-33 |
| 1751 647. . . | 23-63-33 |
| 1751 654. . . | 23-63-33 |
| 1751 655. . . | 23-63-33 |
| 1751 692. . . | 23-64-12 |
| 1751 693. . . | 23-64-12 |
| 1751 698. . . | 23-64-12 |
| 1751 699. . . | 23-64-12 |
| 1751 706. . . | 23-63-15 |
| 1751 707. . . | 23-63-15 |
| 1751 708. . . | 23-63-15 |
| 1751 709. . . | 23-63-15 |
| 1751 724. . . | 23-63-15 |
| 1751 725. . . | 23-63-15 |
| 1751 732. . . | 23-39-15 |
| 1751 733. . | 23-58-569 |
| 1751 742. . . | 23-63-33 |
| 1751 743. . . | 23-63-33 |
| 1751 744. . . | 23-63-33 |
| 1751 745. . . | 23-63-33 |
| 1751 762. . . | 23-32-68 |
| 1751 764. . . | 23-32-68 |
| 1751 774. . . | 23-63-33 |
| 1751 775. . . | 23-63-33 |
| 1751 793. . . | 23-36-21 |
| 1751 806. . | 23-58-480 |
| 1751 807. . | 23-58-480 |
| 1751 810. . | 23-48-480 |
| 1751 890. . | 23-64-280 |
| 1751 891. . | 23-64-280 |
| 1752 016. . | 23-31-150 |
| 1752 244. . . | 21-85-7 |
| 1752 245. . . | 21-85-7 |
| 1752 246. . . | 21-85-7 |
| 1752 247. . . | 21-85-7 |
| 1752 366. . . | 8-52-176 |
| 1752 378. . . | 8-52-80 |
| 1752 386. . . | 8-52-120 |
| 1752 387. . . | 8-52-13 |
| 1752 403. . . | 8-20-10 |
| 1752 422. . . . | 7-42-1 |
| 1752 435. . . . | 7-42-4 |
| 1752 470. . . . | 5-39-4 |
| 1752 479. . . | 21-01-3 |
| 1752 488. . . . | 8-16-3 |
| 1752 489. . . . | 8-16-3 |
| 1752 491. . . . | 8-16-3 |
| 1752 518. . . | 23-67-16 |
| 1752 588. . . . | 9-35-1 |
| 1752 589. . . . | 9-35-1 |
| 1752 590. . . . | 9-35-1 |
| 1752 606. . | 21-118-37 |
| 1752 622. . . . | 7-42-4 |
| 1752 624. . . | 16-03-1 |
| 1752 680. . . | 16-03-1 |
| 1753 085. . . | 8-32-108 |
| 1753 214. . . | 23-67-5 |
| 1753 215. . . | 23-67-5 |
| 1753 435. . . | 8-34-175 |
| 1753 436. . . | 8-34-175 |
| 1753 534. . . . | 8-13-9 |
| | 8-16-4 |
| 1753 579. . . | 24-28-78 |
| 1753 632. . . | 8-31-16 |
| | 8-37-88 |
| 1753 670. . . . | 8-28-3 |
| 1753 706. . . | 23-41-4 |
| 1753 707. . . | 23-41-4 |
| 1753 711. . | 23-67-204 |
| 1753 712. . | 23-67-203 |
| 1754 236. . . | 15-19-8 |
| 1754 294. . . | 12-07-1 |
| 1754 295. . . | 12-07-1 |
| 1755 097. . . | 15-11-16 |
| 1755 366. . | 23-64-237 |
| 1758 813. . . | 23-15-22 |
| 1766 514. . . | 23-36-6 |
| 1766 986. . . | 23-20-16 |
| 1767 102. . | 23-31-125 |
| 1767 247. . . | 23-63-14 |
| 1769 318. . | 24-25-219 |
| 1769 326. . . | 8-50-126 |
| 1769 327. . | 23-54-172 |
| 1769 330. . | 23-41-184 |
| 1769 430. . . | 1-87-404 |
| 1769 445. . . . | 1-88-6 |
| 1769 446. . . . | 1-88-6 |
| 1769 967. . | 23-47-423 |
| 1770 140. . . | 23-67-50 |
| 1770 289. . . | 23-67-82 |
| 1770 290. . . | 23-67-82 |
| 1770 296. . . | 23-67-82 |
| 1770 498. . . | 8-33-120 |
| 1770 531. . . | 1-48-801 |
| 1770 552. . | 23-58-200 |
| 1770 553. . | 23-58-200 |
| 1770 601. . . . | 8-28-3 |
| 1770 602. . . . | 8-28-3 |
| 1770 660. . . | 8-19-39 |
| | 23-67-166 |
| 1770 661. . | 23-67-163 |
| 1770 739. . . . | 8-28-3 |
| 1770 740. . . . | 8-28-3 |
| 1770 756. . . | 8-20-20 |
| 1770 786. . . . | 8-13-1 |
| 1772 447. . . . | 1-76-1 |
| | 23-21-15 |
| 1772 798. . . | 23-63-20 |
| 1773 071. . . . | 1-76-1 |
| | 23-21-15 |
| 1774 024. . . | 23-54-6 |
| 1774 025. . . | 23-54-6 |
| 1774 621. . | 23-31-205 |
| 1774 625. . | 23-31-205 |
| 1775 089. . . | 23-63-16 |
| | 23-63-22 |
| 1775 164. . . | 23-54-79 |
| 1775 440. . . | 23-48-19 |
| 1775 814. . . | 23-32-82 |
| | 23-48-21 |
| 1775 891. . . | 23-32-80 |
| 1776 504. . | 23-64-242 |
| 1776 505. . | 23-64-242 |
| 1777 926. . . | 23-54-27 |
| 1778 529. . . | 23-26-23 |
| 1778 955. . | 23-54-152 |
| 1779 055. . | 23-47-430 |
| 1779 072. . . | 1-88-162 |
| 1779 257. . . | 1-48-572 |
| | 24-01-87 |
| 1779 406. . . | 8-34-220 |
| 1779 645. . . | 23-54-74 |
| 1779 863. . . | 1-88-205 |
| 1779 885. . . | 1-48-555 |
| 1779 890. . | 23-47-425 |
| 1779 955. . . . | 8-52-4 |
| 1779 986. . . | 8-28-88 |
| 1779 992. . . | 23-67-5 |
| 1779 993. . . | 23-67-5 |
| 1785 972. . . . | 8-16-2 |
| 1786 009. . . . | 8-16-2 |
| 1786 037. . . . | 8-16-2 |
| 1786 052. . . . | 8-16-2 |



MyMopar.com

| PART NUMBER | CODE |
|---|---|
| 1789 754. . . | 22-06-2 |
| 1789 755. . . | 22-06-1 |
| 1790 241. . . | 22-06-1 |
| 1790 244. . . | 22-06-2 |
| 1790 523. . . . | 3-11-1 |
| 1798 154. . . | 23-21-33 |
| 1810 002. . | 23-58-572 |
| 1810 003. . | 23-58-572 |
| 1810 004. . | 23-58-572 |
| 1810 005. . | 23-58-572 |
| 1810 006. . | 23-58-590 |
| 1810 007. . | 23-58-590 |
| 1810 016. . . | 23-63-94 |
| 1810 017. . . | 23-63-94 |
| 1810 056. . | 23-34-249 |
| 1810 057. . | 23-34-249 |
| 1810 058. . . | 23-40-92 |
| 1810 059. . . | 23-40-92 |
| 1810 073. . . | 12-02-5 |
| 1810 076. . | 23-34-178 |
| 1810 088. . . | 23-61-39 |
| 1810 204. . | 23-34-236 |
| 1810 205. . | 23-34-236 |
| 1810 273. . . | 23-32-15 |
| | 23-34-178 |
| 1810 440. . | 23-58-487 |
| 1810 565. . | 23-34-116 |
| 1810 586. . . | 23-36-73 |
| 1810 587. . . | 23-36-73 |
| 1810 588. . | 23-58-225 |
| 1810 589. . | 23-58-225 |
| 1810 635. . | 23-41-273 |
| 1810 641. . | 23-41-138 |
| 1810 648. . | 23-41-273 |
| 1810 704. . . | 23-63-33 |
| 1810 705. . . | 23-63-33 |
| 1810 706. . . | 23-63-33 |
| 1810 707. . . | 23-63-33 |
| 1810 860. . | 23-64-299 |
| 1810 861. . | 23-64-299 |
| 1810 862. . | 23-64-299 |
| 1810 863. . | 23-64-299 |
| 1815 328. . . | 23-45-30 |
| 1818 524. . . . | 9-09-2 |
| 1818 525. . . . | 9-09-2 |
| 1818 526. . . . | 9-09-2 |
| 1818 528. . . . | 9-09-2 |
| 1818 639. . . . | 5-63-1 |
| 1818 685. . . | 23-67-61 |
| 1818 698. . . . | 9-32-2 |
| 1818 699. . . . | 9-32-2 |
| 1818 700. . . . | 9-32-2 |
| 1818 701. . . . | 9-32-2 |
| 1818 702. . . . | 9-32-2 |
| 1818 703. . . . | 9-32-2 |
| 1818 730. . . | 8-27-205 |
| 1818 749. . . | 8-29-146 |
| 1818 757. . . | 8-27-190 |
| 1818 781. . . . | 9-11-1 |
| 1818 810. . | 23-67-111 |
| 1818 813. . | 23-67-106 |
| 1818 830. . . | 8-53-327 |
| 1818 864. . | 23-54-212 |
| 1818 866. . | 23-54-206 |
| 1818 876. . | 23-67-111 |
| 1818 878. . | 23-67-106 |
| 1818 892. . . | 23-67-25 |
| 1818 900. . | 23-54-200 |
| 1818 904. . | 23-47-434 |
| 1818 917. . . | 1-108-2 |
| 1818 918. . . | 1-108-2 |
| 1818 999. . . . | 2-07-1 |
| 1819 011. . . | 1-87-22 |
| 1819 014. . . | 1-48-159 |
| | 1-87-22 |
| | 24-28-75 |
| 1819 168. . . | 23-41-33 |
| 1819 169. . . | 23-41-33 |
| 1819 182. . | 23-54-168 |
| 1819 190. . | 23-54-164 |
| 1819 228. . | 23-47-344 |
| 1819 230. . | 23-47-413 |
| 1819 251. . . | 1-82-15 |
| 1819 316. . . | 23-17-51 |
| 1819 317. . . | 23-17-52 |
| 1819 409. . . . | 1-87-5 |
| 1819 441. . . . | 8-38-4 |
| 1819 470. . . | 1-48-264 |
| 1819 748. . . | 1-48-941 |
| | 24-01-65 |
| 1819 841. . . | 8-33-121 |
| 1819 843. . | 24-25-156 |
| 1819 874. . . | 21-85-9 |
| 1819 889. . . | 1-87-289 |
| 1820 002. . | 5-100-183 |
| 1820 003. . | 5-100-152 |
| 1820 005. . . . | 5-28-8 |
| 1820 007. . | 5-100-200 |
| 1820 008. . | 5-100-203 |
| 1820 009. . | 5-100-142 |
| 1820 010. . | 5-100-201 |
| 1820 011. . . | 5-100-21 |
| 1820 012. . | 5-100-169 |
| 1820 013. . | 5-100-183 |
| 1820 025. . | 5-100-182 |
| 1820 113. . . | 13-66-15 |
| 1820 114. . . | 13-64-10 |
| 1820 152. . . | 17-15-25 |
| 1820 153. . . | 17-15-25 |
| 1820 211. . . . | 6-27-5 |
| 1820 217. . . . | 6-35-1 |
| 1820 318. . . | 11-02-4 |
| 1820 319. . . | 11-02-4 |
| 1820 385. . . | 19-14-35 |
| 1820 387. . . | 19-46-11 |
| 1820 448. . . . | 6-24-1 |
| 1820 454. . . . | 6-13-4 |
| 1820 551. . . | 3-22-25 |
| 1820 552. . . | 3-22-24 |
| 1820 698. . . . | 3-03-3 |
| 1820 701. . . | 3-22-28 |
| 1820 703. . . | 3-22-28 |
| 1820 704. . . | 3-22-28 |
| 1820 705. . . | 3-22-28 |
| 1820 812. . . | 17-15-25 |
| 1820 813. . . | 17-15-25 |
| 1821 138. . . . | 7-03-1 |
| 1821 144. . . | 14-29-3 |
| 1821 168. . . | 10-23-7 |
| 1821 170. . . | 14-29-5 |
| 1821 174. . . | 9-48-40 |
| 1821 177. . . . | 9-07-8 |
| 1821 178. . . | 9-48-40 |
| 1821 198. . . | 10-01-21 |
| 1821 200. . . | 10-01-21 |
| 1821 221. . . . | 7-03-1 |
| 1821 337. . . | 8-28-302 |
| 1821 389. . . . | 9-11-7 |
| 1821 393. . . . | 9-43-9 |
| 1821 394. . . | 8-36-124 |
| 1821 411. . . . | 7-06-1 |
| 1821 414. . . . | 9-07-8 |
| 1821 440. . . | 9-03-29 |
| 1821 449. . . . | 7-06-1 |
| 1821 452. . . | 7-06-14 |
| 1821 557. . . | 9-02-14 |
| 1821 643. . . . | 7-03-1 |
| 1821 721. . . | 9-02-16 |
| 1821 722. . . | 9-16-17 |
| 1821 771. . . . | 9-16-6 |
| 1821 772. . . . | 9-16-6 |
| 1821 773. . . . | 9-16-6 |
| 1821 774. . . . | 9-16-6 |
| 1821 775. . . . | 9-16-6 |
| 1822 051. . . | 14-30-2 |
| 1822 134. . . | 19-01-50 |
| 1822 149. . . | 19-01-52 |
| 1822 150. . . | 19-01-51 |
| 1822 151. . . | 19-01-52 |
| 1822 156. . . | 19-15-63 |
| 1822 157. . . | 19-15-65 |
| 1822 158. . . | 19-15-60 |
| 1822 203. . . | 19-19-35 |
| 1822 204. . . | 19-19-9 |
| 1822 320. . . | 19-19-72 |
| 1822 321. . . | 19-01-62 |
| 1822 324. . . | 19-19-70 |
| 1822 380. . . | 19-57-63 |
| 1822 390. . . | 19-15-69 |
| 1822 406. . . | 19-19-71 |
| 1822 442. . . | 19-56-83 |
| 1822 667. . . | 19-15-11 |
| 1822 668. . . | 19-15-10 |
| 1822 671. . . | 19-56-6 |
| 1822 672. . . | 19-56-6 |
| 1822 736. . . | 19-15-38 |
| 1822 871. . . | 19-57-64 |
| 1822 953. . . | 19-01-50 |
| 1823 091. . . | 19-01-52 |
| 1823 148. . . | 19-57-3 |
| 1823 160. . . | 19-14-10 |
| 1823 161. . . | 19-01-60 |
| 1823 543. . . | 21-138-6 |
| 1823 548. . . | 9-46-93 |
| 1823 666. . | 21-118-40 |
| 1823 667. . | 21-118-40 |
| 1823 726. . | 21-138-13 |
| 1823 729. . | 21-133-71 |
| 1823 731. . | 21-133-70 |
| 1823 762. . | 21-139-143 |
| 1823 872. . . | 21-129-8 |
| 1823 916. . . | 21-14-15 |
| 1823 934. . . . | 9-46-4 |
| 1823 940. . | 21-137-44 |
| 1823 941. . | 21-137-41 |
| 1824 075. . . | 21-05-12 |
| 1824 309. . . | 16-20-1 |
| 1824 316. . | 21-137-53 |
| 1824 317. . | 21-137-56 |
| 1824 321. . . | 21-03-45 |
| 1824 334. . . | 9-46-90 |
| 1824 403. . . | 21-05-35 |
| 1824 493. . . | 21-03-1 |
| 1824 549. . | 21-133-17 |
| 1824 550. . | 21-133-17 |
| 1824 551. . | 21-133-17 |
| 1824 552. . | 21-133-17 |
| 1824 553. . | 21-129-13 |
| 1824 562. . . | 21-133-5 |
| 1824 879. . . | 17-29-6 |
| 1824 934. . . | 17-29-14 |
| 1824 935. . . | 17-29-12 |
| 1824 936. . . | 17-29-12 |
| 1824 941. . . | 19-27-2 |
| 1824 974. . . . | 2-10-6 |
| 1824 975. . . . | 2-10-7 |
| 1825 135. . . | 2-10-10 |
| 1825 136. . . | 2-10-16 |
| 1825 137. . . | 2-10-16 |
| 1825 138. . . . | 2-10-6 |
| 1825 139. . . . | 2-10-7 |
| 1825 180. . . | 2-10-10 |
| 1825 184. . . | 2-14-12 |
| 1825 303. . . | 2-10-66 |
| 1825 306. . . . | 2-08-5 |
| 1825 307. . . . | 2-08-5 |
| 1825 314. . . | 2-08-48 |
| 1825 317. . . . | 2-08-7 |
| 1825 350. . . | 2-10-62 |
| 1825 432. . . | 2-10-63 |
| 1825 449. . . | 2-08-71 |
| | 2-10-63 |
| 1825 487. . . | 2-08-61 |
| | 2-08-75 |
| 1825 488. . . | 2-10-66 |
| 1825 539. . . | 2-10-59 |
| 1825 582. . . | 2-14-19 |
| 1825 604. . . . | 2-14-3 |
| 1825 605. . . . | 2-14-3 |
| 1825 606. . . . | 2-14-3 |
| 1825 607. . . . | 2-14-3 |
| 1825 608. . . . | 2-14-3 |
| 1825 609. . . . | 2-14-3 |
| 1825 610. . . . | 2-14-3 |
| 1825 611. . . . | 2-14-3 |
| 1825 664. . . . | 2-08-5 |
| 1825 665. . . . | 2-08-5 |
| 1825 672. . . . | 2-05-4 |
| 1825 673. . . . | 2-05-4 |
| 1825 674. . . . | 2-05-4 |
| 1825 675. . . . | 2-05-4 |
| 1825 676. . . . | 2-05-4 |
| 1825 677. . . . | 2-05-4 |
| 1825 702. . . . | 2-14-3 |
| 1825 703. . . . | 2-14-3 |
| 1825 706. . . . | 2-14-3 |
| 1825 707. . . . | 2-14-3 |
| 1825 922. . . | 10.02-8 |
| 1826 053. . . . | 7-06-1 |
| 1826 056. . . | 19-54-86 |
| 1826 057. . | 19-54-115 |
| 1826 058. . | 19-54-115 |
| 1826 059. . . | 8-28-36 |
| 1826 066. . . | 8-28-15 |
| 1826 286. . . | 14-29-33 |
| 1826 369. . . | 14-41-3 |
| 1826 511. . . | 14-30-7 |
| 1826 552. . . | 14-30-7 |
| 1826 561. . . | 14-30-7 |
| 1826 607. . . | 14-41-3 |
| 1826 833. . . | 14-30-8 |
| 1826 834. . . | 14-30-8 |
| 1826 840. . . | 14-43-5 |
| 1826 843. . . | 14-43-5 |
| 1826 844. . . | 14-30-8 |
| 1826 863. . . | 14-30-28 |
| 1826 864. . . | 14-30-27 |
| 1826 875. . . | 14-43-5 |
| 1826 886. . . | 14-43-5 |
| 1827 431. . . . | 7-03-1 |
| 1827 772. . . | 8-28-36 |
| 1827 773. . . | 14-11-48 |
| 1827 794. . . | 8-28-15 |
| 1827 899. . . . | 9-48-7 |
| | 14-06-10 |
| 1828 140. . . | 10-24-4 |
| 1828 225. . . | 8-35-44 |
| 1828 352. . . | 13-34-3 |
| 1828 388. . . . | 5-40-1 |
| 1828 389. . . . | 5-44-8 |



MyMopar.com

| PART NUMBER | CODE |
|---|---|
| 1828 396. . . | 5-25-62 |
| 1828 440. . . | 3-19-1 |
| 1828 447. . . | 3-03-3 |
| 1828 456. . . | 14-86-57 |
| 1828 461. . . | 5-52-3 |
| 1828 516. . . | 3-03-1 |
| 1828 517. . . | 3-03-1 |
| 1828 566. . . | 19-14-5 |
| 1828 646. . . | 16-20-1 |
| 1828 659. . . | 5-44-3 |
| 1828 699. . . | 3-03-1 |
| 1828 700. . . | 3-03-1 |
| 1828 824. . . | 16-10-3 |
| 1828 851. . . | 17-19-3 |
| 1828 911. . . | 19-14-4 |
| 1829 058. . . | 8-47-57 |
| 1829 128. . . | 19-19-24 |
| 1829 133. . . | 19-13-6 |
| 1829 134. . . | 19-13-4 |
| 1829 135. . . | 19-13-5 |
| 1829 264. . . | 3-03-2 |
| 1829 266. . . | 3-32-1 |
| 1829 267. . . | 3-32-1 |
| 1829 338. . . | 3-03-1 |
| 1829 383. . . | 6-52-10 |
| 1829 440. . . | 3-22-28 |
| | 5-39-3 |
| 1829 441. . . | 3-22-28 |
| 1829 442. . . | 3-22-28 |
| 1829 443. . . | 3-22-28 |
| 1829 444. . . | 3-22-28 |
| 1829 445. . . | 3-32-9 |
| 1829 446. . . | 3-08-1 |
| 1829 447. . . | 3-06-8 |
| 1829 448. . . | 3-06-5 |
| 1829 449. . . | 3-07-1 |
| 1829 450. . . | 3-09-2 |
| 1829 451. . . | 3-09-1 |
| 1829 496. . . | 3-03-1 |
| 1829 568. . . | 19-04-1 |
| 1829 589. . . | 19-46-32 |
| 1829 639. . . | 22-01-51 |
| 1829 790. . . | 4-23-1 |
| 1829 816. . . | 4-23-2 |
| 1829 822. . . | 4-25-16 |
| 1829 825. . . | 24-28-378 |
| 1829 928. . . | 17-15-25 |
| 1829 929. . . | 17-15-24 |
| 1829 984. . . | 9-69-4 |
| 1830 044. . . | 23-17-72 |
| 1830 212. . . | 23-47-431 |
| 1830 216. . . | 23-47-431 |
| 1830 217. . . | 23-47-431 |
| 1830 218. . . | 23-47-431 |
| 1830 236. . . | 23-47-12 |
| 1830 237. . . | 23-47-12 |
| 1830 290. . . | 23-47-414 |
| 1830 344. . . | 23-47-432 |
| 1830 345. . . | 23-47-432 |
| 1830 346. . . | 23-47-432 |
| 1830 347. . . | 23-47-432 |
| 1830 348. . . | 23-47-432 |
| 1830 349. . . | 23-47-432 |
| 1830 415. . . | 23-06-28 |
| 1830 452. . . | 23-31-124 |
| 1830 498. . . | 23-26-23 |
| | 23-26-62 |
| 1830 499. . . | 23-26-23 |
| | 23-26-62 |
| 1830 632. . . | 1-48-365 |
| | 24-28-90 |
| 1830 633. . . | 1-48-365 |
| 1832 014. . . | 8-55-57 |
| 1832 147. . . | 12-01-16 |
| 1832 721. . . | 15-19-4 |
| 1833 596. . . | 23-32-80 |
| | 23-48-20 |
| 1833 597. . . | 23-32-82 |
| | 23-48-21 |
| 1833 900. . . | 23-04-249 |
| 1835 109. . . | 23-48-93 |
| 1838 001. . . | 1-82-22 |
| 1838 289. . . | 23-67-18 |
| 1838 291. . . | 23-67-79 |
| 1838 293. . . | 23-67-18 |
| 1838 380. . . | 24-28-78 |
| 1838 505. . . | 8-27-1 |
| 1838 508. . . | 8-27-76 |
| 1838 514. . . | 8-27-71 |
| 1838 516. . . | 8-27-300 |
| 1838 643. . . | 8-27-158 |
| 1838 934. . . | 23-67-79 |
| 1838 935. . . | 23-67-79 |
| 1838 936. . . | 23-67-76 |
| 1838 985. . . | 23-17-2 |
| 1838 986. . . | 8-30-1 |
| 1839 327. . . | 19-31-7 |
| 1839 345. . . | 1-48-389 |
| 1839 386. . . | 23-47-8 |
| 1839 387. . . | 23-47-8 |
| 1839 546. . . | 23-22-145 |
| 1839 547. . . | 23-22-145 |
| 1839 558. . . | 23-22-145 |
| 1839 559. . . | 23-22-145 |
| 1839 566. . . | 23-22-145 |
| 1839 567. . . | 23-22-145 |
| 1839 568. . . | 23-06-12 |
| 1839 569. . . | 23-06-10 |
| 1839 570. . . | 23-07-168 |
| 1839 670. . . | 23-21-18 |
| 1839 685. . . | 19-31-24 |
| 1839 688. . . | 23-33-42 |
| 1839 689. . . | 23-33-129 |
| 1839 690. . . | 23-33-129 |
| 1839 691. . . | 23-33-217 |
| 1839 694. . . | 23-33-86 |
| 1839 695. . . | 23-33-86 |
| 1839 698. . . | 23-33-56 |
| 1839 699. . . | 23-33-56 |
| 1839 700. . . | 23-33-213 |
| 1839 704. . . | 23-02-18 |
| 1839 711. . . | 8-37-90 |
| 1839 715. . . | 23-33-213 |
| 1839 727. . . | 23-33-42 |
| 1839 728. . . | 8-37-178 |
| 1839 730. . . | 23-33-129 |
| 1839 732. . . | 23-33-135 |
| 1839 733. . . | 23-33-56 |
| | 23-33-135 |
| 1839 734. . . | 23-06-17 |
| 1839 736. . . | 23-33-213 |
| 1839 737. . . | 23-33-26 |
| 1839 763. . . | 19-31-24 |
| 1839 765. . . | 23-33-213 |
| 1839 769. . . | 23-33-220 |
| 1839 778. . . | 23-33-96 |
| 1839 845. . . | 1-76-2 |
| 1839 852. . . | 1-76-1 |
| | 23-21-15 |
| 1839 926. . . | 23-22-53 |
| 1839 927. . . | 23-22-53 |
| 1839 928. . . | 23-22-53 |
| 1839 929. . . | 23-22-53 |
| 1839 930. . . | 23-22-53 |
| 1839 931. . . | 23-22-53 |
| 1839 932. . . | 23-22-53 |
| 1839 933. . . | 23-22-53 |
| 1839 934. . . | 23-22-53 |
| 1839 935. . . | 23-22-53 |
| 1839 936. . . | 23-26-41 |
| 1839 937. . . | 23-26-41 |
| 1839 940. . . | 23-22-86 |
| 1839 941. . . | 23-22-86 |
| 1839 942. . . | 23-22-53 |
| 1839 943. . . | 23-22-53 |
| 1839 950. . . | 23-20-14 |
| 1839 951. . . | 23-20-14 |
| 1839 952. . . | 23-20-14 |
| 1839 953. . . | 23-20-14 |
| 1839 954. . . | 23-20-14 |
| 1839 955. . . | 23-20-14 |
| 1839 956. . . | 23-20-16 |
| 1839 965. . . | 23-21-26 |
| 1839 966. . . | 23-21-46 |
| 1839 967. . . | 23-21-47 |
| 1839 976. . . | 23-22-78 |
| 1839 977. . . | 23-22-77 |
| 1839 979. . . | 19-31-1 |
| 1839 980. . . | 19-31-24 |
| 1839 984. . . | 19-31-1 |
| 1839 985. . . | 19-31-24 |
| 1841 191. . . | 23-67-86 |
| 1841 509. . . | 8-28-3 |
| 1841 679. . . | 23-67-79 |
| 1841 680. . . | 23-67-79 |
| 1841 682. . . | 23-67-86 |
| 1841 683. . . | 23-67-86 |
| 1841 697. . . | 8-56-34 |
| 1841 698. . . | 1-87-464 |
| 1841 775. . . | 8-34-175 |
| 1842 003. . . | 8-16-8 |
| 1842 009. . . | 8-16-4 |
| 1842 020. . . | 8-37-3 |
| 1842 211. . . | 8-34-175 |
| 1842 407. . . | 23-67-79 |
| 1842 521. . . | 8-28-3 |
| 1842 546. . . | 8-52-328 |
| 1842 550. . . | 8-52-328 |
| 1842 603. . . | 8-28-3 |
| 1842 606. . . | 8-28-3 |
| 1842 772. . . | 8-28-3 |
| 1842 773. . . | 8-28-3 |
| 1842 775. . . | 8-28-3 |
| 1842 776. . . | 8-28-3 |
| 1842 777. . . | 8-28-3 |
| 1842 778. . . | 8-28-3 |
| 1842 779. . . | 8-28-3 |
| 1842 780. . . | 8-28-3 |
| 1842 781. . . | 8-28-3 |
| 1842 784. . . | 8-28-3 |
| 1842 785. . . | 8-28-3 |
| 1842 791. . . | 8-28-3 |
| 1842 795. . . | 8-28-3 |
| 1842 964. . . | 23-67-98 |
| 1842 997. . . | 14-72-6 |
| 1843 004. . . | 9-34-5 |
| 1843 005. . . | 9-34-5 |
| 1843 006. . . | 9-34-5 |
| 1843 007. . . | 9-34-5 |
| 1843 008. . . | 11-02-1 |
| | 11-08-1 |
| | 11-10-1 |
| 1843 009. . . | 11-08-1 |
| | 11-10-1 |
| 1843 027. . . | 1-116-2 |
| 1843 028. . . | 5-03-1 |
| 1843 135. . . | 8-52-135 |
| 1843 156. . . | 8-29-17 |
| 1843 179. . . | 4-03-5 |
| 1843 222. . . | 8-16-1 |
| 1843 226. . . | 8-16-1 |
| | 14-02-5 |
| | 14-72-32 |
| | 23-18-120 |
| | 23-41-58 |
| | 24-25-235 |
| | 24-28-196 |
| 1843 227. . . | 8-16-1 |
| | 14-72-32 |
| | 24-28-196 |
| 1843 229. . . | 21-133-3 |
| 1843 230. . . | 21-118-1 |
| 1843 251. . . | 5-53-3 |
| | 8-27-320 |
| | 14-50-39 |
| 1843 252. . . | 5-53-3 |
| 1843 253. . . | 5-53-3 |
| | 14-89-2 |
| 1843 254. . . | 5-53-3 |
| 1843 257. . . | 5-53-4 |
| 1843 258. . . | 5-53-4 |
| 1843 259. . . | 5-53-4 |
| 1843 287. . . | 14-73-1 |
| 1843 316. . . | 9-34-5 |
| 1843 317. . . | 9-34-5 |
| 1843 318. . . | 9-34-5 |
| 1843 320. . . | 8-52-76 |
| 1843 330. . . | 9-35-1 |
| 1843 331. . . | 9-35-1 |
| 1843 332. . . | 9-35-1 |
| 1843 337. . . | 8-27-138 |
| 1843 368. . . | 8-27-138 |
| 1843 400. . . | 14-73-1 |
| 1843 403. . . | 21-138-2 |
| 1843 407. . . | 11-08-1 |
| 1843 408. . . | 11-10-1 |
| 1843 413. . . | 5-39-3 |
| 1843 447. . . | 7-42-4 |
| 1843 482. . . | 8-27-138 |
| 1843 920. . . | 23-19-105 |
| 1846 350. . . | 23-67-129 |
| 1846 668. . . | 23-32-36 |
| 1850 163. . . | 4-01-1 |
| 1850 370. . . | 3-04-6 |
| 1850 524. . . | 19-15-23 |
| 1850 547. . . | 19-14-38 |
| 1850 732. . . | 3-03-1 |
| 1850 758. . . | 3-03-1 |
| 1850 804. . . | 3-09-2 |
| 1850 879. . . | 14-02-33 |
| 1850 938. . . | 5-13-9 |
| 1850 939. . . | 14-02-19 |
| 1851 024. . . | 12-04-23 |
| 1851 314. . . | 19-54-115 |
| 1851 371. . . | 8-28-289 |
| 1851 379. . . | 6-09-1 |
| 1851 401. . . | 7-04-5 |
| 1851 491. . . | 14-29-2 |
| 1851 493. . . | 14-29-6 |
| 1851 527. . . | 9-07-5 |
| 1851 533. . . | 9-31-4 |
| 1851 579. . . | 9-03-5 |
| 1851 586. . . | 14-74-2 |
| 1851 658. . . | 10-26-6 |
| 1851 664. . . | 9-50-16 |
| 1851 665. . . | 9-48-27 |
| 1851 669. . . | 9-42-1 |
| 1851 732. . . | 19-54-86 |
| 1851 767. . . | 9-39-5 |
| 1851 768. . . | 9-39-5 |
| 1851 769. . . | 9-39-5 |
| 1851 770. . . | 9-39-5 |
| 1851 861. . . | 9-23-40 |
| 1851 869. . . | 9-07-5 |



MyMopar.com

| PART NUMBER | CODE |
|---|---|
| 1851 899. . . . | 9-48-7 |
| 1851 904. . . . | 9-41-4 |
| 1851 924. . . | 9-03-28 |
| 1851 957. . . | 19-54-60 |
| 1852 020. . . | 14-39-45 |
| 1852 057. . . | 10-02-15 |
| 1852 058. . . | 10-02-15 |
| 1852 177. . . | 9-16-17 |
| 1852 248. . . . | 9-39-6 |
| 1852 582. . . | 7-06-14 |
| 1852 586. . . | 14-30-2 |
| 1852 855. . | 19-54-246 |
| 1852 920. . | 19-54-248 |
| 1852 932. . . | 24-25-15 |
| 1852 933. . . | 24-25-15 |
| 1853 594. . | 21-129-10 |
| 1853 595. . | 21-118-47 |
| | 21-129-23 |
| 1853 626. . . | 21-09-2 |
| 1853 627. . . | 21-15-2 |
| 1853 672. . . | 21-14-5 |
| 1853 673. . . | 21-129-5 |
| 1853 695. . . | 21-11-1 |
| 1853 736. . . | 9-46-137 |
| 1853 739. . . | 21-29-3 |
| 1853 745. . . | 21-34-47 |
| 1853 754. . . | 21-133-5 |
| 1853 769. . . | 21-05-25 |
| 1853 841. . . | 21-02-1 |
| 1853 851. . . | 21-03-1 |
| 1853 855. . . | 21-10-4 |
| 1853 856. . . | 21-29-25 |
| 1853 858. . | 21-133-15 |
| 1853 859. . | 21-133-35 |
| 1853 860. . | 21-133-32 |
| 1853 888. . . | 21-05-26 |
| 1853 891. . . | 21-04-2 |
| 1853 909. . . | 21-14-1 |
| 1853 923. . . | 21-133-7 |
| 1853 934. . . | 21-134-5 |
| 1853 943. . | 21-133-71 |
| 1853 989. . . | 21-133-5 |
| 1854 111. . . | 21-133-5 |
| 1854 112. . . | 21-133-7 |
| 1854 128. . . | 21-136-5 |
| 1854 170. . | 21-136-30 |
| 1854 171. . | 21-136-44 |
| 1854 172. . | 21-136-41 |
| 1854 217. . | 21-139-190 |
| 1854 245. . | 21-139-135 |
| 1854 258. . | 21-139-135 |
| 1854 269. . . | 21-139-4 |
| 1854 272. . | 21-139-135 |
| 1854 273. . | 21-139-135 |
| 1854 274. . | 21-139-95 |
| 1854 275. . | 21-139-95 |
| 1854 276. . | 21-139-200 |
| 1854 277. . | 21-139-202 |
| 1854 278. . | 21-139-101 |
| 1854 300. . . | 21-133-5 |
| 1854 304. . | 21-118-38 |
| 1854 314. . . | 9-46-93 |
| 1854 319. . | 21-131-15 |
| 1854 449. . . | 21-22-2 |
| 1854 523. . . | 9-46-107 |
| 1854 829. . | 24-25-160 |
| 1854 853. . . | 9-48-138 |
| 1854 895. . . . | 7-03-1 |
| 1854 990. . . . | 9-48-6 |
| 1855 029. . . | 11-06-8 |
| 1855 042. . . | 9-39-15 |
| 1855 152. . . . | 7-06-1 |
| 1855 238. . . . | 9-43-3 |
| 1855 247. . . | 10-24-37 |
| 1855 328. . . | 10-07-12 |
| 1855 393. . . . | 9-05-5 |
| 1855 441. . . | 24-25-15 |
| 1855 561. . . | 9-07-22 |
| 1855 605. . . . | 9-05-5 |
| 1855 737. . . . | 6-09-1 |
| 1856 292. . . | 19-15-63 |
| 1856 297. . . | 14-02-7 |
| 1856 318. . . . | 8-33-5 |
| 1856 336. . . | 19-15-20 |
| 1856 346. . . | 17-11-7 |
| 1856 347. . . | 17-11-7 |
| 1856 423. . . | 22-01-43 |
| 1856 491. . | 21-30-365 |
| 1856 498. . . | 19-48-1 |
| 1856 499. . . | 19-48-1 |
| 1856 580. . . | 14-06-1 |
| 1856 923. . . | 16-02-1 |
| 1856 931. . . | 16-02-1 |
| 1856 933. . . | 16-01-1 |
| 1856 942. . | 21-30-375 |
| 1856 961. . . | 16-02-1 |
| 1856 963. . . | 16-02-1 |
| 1856 992. . . | 19-04-13 |
| 1856 999. . | 19-15-109 |
| 1857 001. . | 19-15-110 |
| 1857 003. . | 19-15-110 |
| 1857 004. . | 19-15-111 |
| 1857 032. . . . | 4-01-1 |
| 1857 034. . . . | 4-01-1 |
| 1857 044. . . . | 5-16-1 |
| 1857 045. . . . | 5-03-5 |
| 1857 051. . . . | 5-64-1 |
| 1857 052. . . . | 5-64-1 |
| 1857 053. . . . | 5-64-1 |
| 1857 054. . . . | 5-64-1 |
| 1857 055. . . . | 5-64-1 |
| 1857 056. . . . | 5-16-1 |
| 1857 057. . . . | 5-16-1 |
| 1857 058. . . . | 5-16-1 |
| 1857 059. . . . | 5-16-1 |
| 1857 061. . . . | 5-16-1 |
| 1857 062. . . . | 5-16-1 |
| 1857 063. . . . | 5-03-5 |
| 1857 549. . . | 2-14-12 |
| 1857 576. . . | 2-14-25 |
| 1857 580. . . | 2-14-19 |
| 1857 962. . . | 19-27-31 |
| 1858 523. . . | 14-39-45 |
| 1858 557. . . . | 9-39-5 |
| 1858 558. . . . | 9-39-5 |
| 1858 559. . . . | 9-39-5 |
| 1858 560. . . . | 9-39-5 |
| 1858 576. . . | 14-07-1 |
| 1858 593. . . | 8-28-15 |
| 1858 620. . . | 24-25-15 |
| 1858 621. . . | 24-25-15 |
| 1858 622. . . | 24-25-15 |
| 1858 623. . . . | 9-48-7 |
| 1858 704. . . | 14-01-16 |
| 1858 706. . . | 14-06-10 |
| 1858 782. . . | 9-39-14 |
| 1858 802. . . | 9-43-19 |
| 1858 892. . . | 14-11-1 |
| 1858 906. . . | 10-03-4 |
| 1858 907. . . | 10-03-4 |
| 1858 936. . . | 14-13-1 |
| 1858 955. . . . | 9-48-8 |
| 1859 144. . . | 9-39-21 |
| 1859 151. . . | 7-45-31 |
| 1859 228. . . . | 9-48-7 |
| 1859 252. . . . | 7-06-1 |
| 1859 298. . . . | 9-48-7 |
| 1859 299. . . . | 9-48-7 |
| 1859 300. . . . | 9-48-7 |
| 1859 324. . . | 8-28-51 |
| 1859 332. . . | 9-48-27 |
| 1859 396. . . | 14-07-1 |
| 1859 432. . . | 9-03-28 |
| 1859 435. . . | 14-29-2 |
| 1859 457. . . | 14-29-2 |
| 1859 465. . . | 9-48-40 |
| 1859 466. . . | 9-48-40 |
| 1859 480. . . | 9-01-24 |
| 1859 482. . . | 9-01-24 |
| 1859 484. . . | 9-01-24 |
| 1859 486. . . | 9-01-24 |
| 1859 488. . . | 9-01-24 |
| 1859 490. . . | 9-01-24 |
| 1859 492. . . | 9-01-24 |
| 1859 494. . . | 9-01-24 |
| 1859 497. . . | 9-01-24 |
| 1859 499. . . | 9-01-24 |
| 1859 527. . . | 14-29-2 |
| 1859 542. . . . | 9-05-5 |
| 1859 571. . . . | 7-04-5 |
| 1859 575. . . | 8-28-36 |
| 1859 576. . . | 8-28-36 |
| 1859 577. . . | 8-28-36 |
| 1859 578. . . | 8-28-285 |
| 1859 580. . . . | 7-06-1 |
| 1859 588. . . | 8-28-283 |
| 1859 589. . . | 8-28-288 |
| 1859 634. . . . | 7-43-1 |
| 1859 671. . . . | 7-06-1 |
| 1859 680. . . . | 7-06-1 |
| 1859 750. . . | 14-29-2 |
| 1859 752. . . . | 9-07-5 |
| 1859 767. . . | 14-11-30 |
| | 21-142-20 |
| 1859 768. . . | 14-11-29 |
| | 21-142-21 |
| 1859 779. . . | 14-13-1 |
| 1859 788. . . | 10-03-7 |
| 1859 866. . | 21-142-12 |
| 1859 868. . . | 14-11-9 |
| | 14-13-1 |
| 1859 940. . | 19-54-246 |
| 1859 947. . . | 10-23-7 |
| 1859 952. . | 8-28-282 |
| 1859 989. . . | 14-06-1 |
| 1859 991. . . | 14-11-1 |
| | 14-13-1 |
| 1859 994. . . | 14-11-28 |
| 1859 995. . . | 14-11-9 |
| 1859 996. . . | 14-11-9 |
| 1860 619. . | 23-41-126 |
| 1860 829. . . | 23-10-1 |
| 1860 942. . . | 23-41-33 |
| 1860 943. . . | 23-41-33 |
| 1860 962. . . | 23-41-4 |
| 1860 963. . . | 23-41-4 |
| 1860 966. . . | 23-41-4 |
| 1860 967. . . | 23-41-4 |
| 1860 995. . | 23-58-569 |
| 1861 002. . . | 23-32-48 |
| 1861 010. . . | 23-32-49 |
| 1861 011. . . | 23-32-49 |
| 1861 014. . . | 23-51-5 |
| 1861 015. . . | 23-51-5 |
| 1861 041. . . | 23-32-48 |
| 1861 048. . . | 23-32-49 |
| 1861 049. . . | 23-32-49 |
| 1861 064. . | 23-34-235 |
| 1861 065. . | 23-34-235 |
| 1861 066. . | 23-34-235 |
| 1861 067. . | 23-34-235 |
| 1861 068. . | 23-34-235 |
| 1861 069. . | 23-34-235 |
| 1861 074. . | 23-34-235 |
| 1861 075. . | 23-34-235 |
| 1861 078. . | 23-34-235 |
| 1861 079. . | 23-34-235 |
| 1861 082. . | 23-34-235 |
| 1861 083. . | 23-34-235 |
| 1861 090. . | 23-34-242 |
| 1861 091. . | 23-34-242 |
| 1861 094. . | 23-34-242 |
| 1861 095. . | 23-34-242 |
| 1861 096. . | 23-34-242 |
| 1861 097. . | 23-34-242 |
| 1861 118. . | 23-34-301 |
| 1861 128. . . | 23-40-86 |
| 1861 129. . . | 23-40-86 |
| 1861 142. . . | 23-64-66 |
| 1861 143. . . | 23-64-66 |
| 1861 222. . | 23-34-302 |
| 1861 223. . | 23-34-302 |
| 1861 248. . | 23-34-126 |
| 1861 249. . | 23-34-126 |
| 1861 264. . . | 23-32-17 |
| 1861 270. . . | 23-51-8 |
| 1861 271. . . | 23-51-8 |
| 1861 334. . | 23-58-569 |
| 1861 335. . | 23-58-569 |
| 1861 345. . | 23-61-104 |
| 1861 352. . . | 23-51-3 |
| 1861 353. . . | 23-51-3 |
| 1861 392. . | 23-58-208 |
| 1861 425. . | 23-34-116 |
| 1861 506. . . | 23-32-49 |
| 1863 002. . . | 7-16-11 |
| 1863 003. . . | 7-16-11 |
| 1863 019. . . | 12-01-12 |
| | 12-04-12 |
| | 15-19-4 |
| 1863 024. . . | 7-16-11 |
| 1863 025. . . | 15-03-3 |
| 1863 052. . . | 15-11-3 |
| 1863 056. . . | 12-04-12 |
| 1863 057. . . | 12-04-12 |
| 1863 062. . . | 7-26-15 |
| 1863 120. . . | 12-15-21 |
| 1863 152. . . | 8-50-338 |
| 1863 153 . . | 8-50-335 |
| 1863 156. . . | 8-50-303 |
| 1863 161. . . | 15-11-7 |
| 1863 196. . . | 8-50-351 |
| 1863 199. . . | 15-03-3 |
| 1863 222. . . | 15-19-2 |
| 1863 223. . . | 15-19-2 |
| 1863 235. . . | 15-19-8 |
| 1863 236. . . | 8-34-40 |
| 1863 237. . . | 8-34-40 |
| 1863 248. . . | 12-01-5 |
| 1863 249. . . | 12-01-5 |
| 1863 275. . . . | 7-33-1 |
| 1863 306. . . | 15-11-3 |
| 1863 323. . . | 15-11-7 |
| 1863 326. . . | 15-19-2 |
| 1863 327. . . | 15-19-2 |
| 1863 331. . . | 15-13-2 |
| 1863 384. . . | 8-50-303 |
| 1863 385. . . | 8-50-303 |
| 1863 390. . . | 8-50-335 |
| 1863 391. . . | 8-50-335 |
| 1863 392. . . | 8-50-338 |
| 1863 428. . . | 12-01-5 |



MyMopar.com

| PART NUMBER | CODE |
|---|---|
| 1863 429. . . | 12-01-5 |
| 1863 514. . . | 8-50-337 |
| 1863 553. . . | 7-31-10 |
| 1863 586. . . | 12-01-12 |
| 1863 598. . . | 15-09-4 |
| 1863 612. . . | 12-01-12 |
| | 12-04-12 |
| 1863 621. . . | 15-11-7 |
| 1863 630. . . | 12-01-5 |
| 1863 631. . . | 12-01-5 |
| 1863 699. . . | 15-03-3 |
| 1863 701. . . | 15-11-16 |
| | 15-13-5 |
| 1863 708. . . | 15-19-8 |
| 1863 716. . . | 12-01-12 |
| 1863 719. . . | 15-11-7 |
| 1863 752. . . | 8-34-40 |
| 1863 753. . . | 8-34-40 |
| 1863 760. . . . | 7-26-5 |
| 1863 774. . . . | 7-26-2 |
| 1863 780. . . . | 7-33-1 |
| 1863 783. . . | 7-16-11 |
| 1863 787. . . | 7-16-11 |
| 1863 815. . . . | 7-26-5 |
| | 12-01-12 |
| | 12-04-12 |
| 1863 816. . . | 15-13-3 |
| 1863 822. . . | 7-16-11 |
| 1863 838. . . | 12-01-9 |
| 1863 839. . . | 12-01-9 |
| 1863 842. . . | 8-34-40 |
| 1863 847. . . . | 7-26-2 |
| 1863 881. . . | 7-31-10 |
| 1863 900. . . | 24-27-5 |
| 1863 926. . . | 12-02-5 |
| 1863 937. . . | 7-31-10 |
| 1866 682. . . | 23-32-66 |
| 1866 683. . . | 23-32-75 |
| 1866 685. . . | 23-32-64 |
| 1866 686. . . | 23-17-18 |
| 1867 583. . . | 23-26-23 |
| 1867 661. . . | 23-19-70 |
| 1867 682. . | 23-34-120 |
| 1867 683. . | 23-34-120 |
| 1867 870. . | 23-34-120 |
| 1867 871. . | 23-34-120 |
| 1867 873. . | 23-34-301 |
| 1867 948. . | 23-34-301 |
| 1868 886. . . | 23-26-2 |
| 1869 556. . . | 23-40-86 |
| 1869 557. . . | 23-40-86 |
| 1869 564. . . | 23-26-44 |
| 1869 565. . . | 23-26-44 |
| 1869 582. . . | 23-32-15 |
| 1869 615. . | 23-34-301 |
| 1869 627. . | 23-66-135 |
| 1869 628. . | 23-64-314 |
| 1869 629. . | 23-64-314 |
| 1869 630. . | 23-64-314 |
| 1869 633. . | 23-34-166 |
| 1869 636. . | 23-34-166 |
| 1869 640. . | 23-34-235 |
| 1869 641. . | 23-34-235 |
| 1869 642. . | 23-34-235 |
| 1869 643. . | 23-34-235 |
| 1869 644. . | 23-34-235 |
| 1869 645. . | 23-34-235 |
| 1869 646. . | 23-34-235 |
| 1869 647. . | 23-34-235 |
| 1869 650. . | 23-34-235 |
| 1869 651. . | 23-34-235 |
| 1869 654. . | 23-34-235 |
| 1869 655. . | 23-34-235 |
| 1869 662. . | 23-34-120 |
| 1869 663. . | 23-34-120 |
| 1869 664. . | 23-34-120 |
| 1869 665. . | 23-34-120 |
| 1869 670. . | 23-34-120 |
| 1869 671. . | 23-34-120 |
| 1869 672. . | 23-34-120 |
| 1869 673. . | 23-34-120 |
| 1869 674. . | 23-34-120 |
| 1869 675. . | 23-34-120 |
| 1869 678. . | 23-34-120 |
| 1869 679. . | 23-34-120 |
| 1869 770. . . | 23-36-53 |
| 1869 771. . . | 23-36-53 |
| 1869 772. . . | 23-36-53 |
| 1869 773. . . | 23-36-53 |
| 1869 774. . . | 23-36-53 |
| 1869 775. . . | 23-36-53 |
| 1869 858. . . | 23-26-44 |
| 1869 859. . . | 23-26-44 |
| 1869 860. . . | 23-26-44 |
| 1869 861. . . | 23-26-44 |
| 1869 868. . | 23-64-280 |
| 1869 869. . | 23-64-280 |
| 1869 872. . | 23-64-280 |
| 1869 873. . | 23-64-280 |
| 1869 892. . . | 23-64-66 |
| 1869 893. . . | 23-64-66 |
| 1872 552. . . | 23-52-1 |
| 1876 331. . . | 23-21-8 |
| 1876 338. . . | 23-26-47 |
| 1877 272. . | 23-34-233 |
| 1877 273. . | 23-34-233 |
| 1877 282. . | 23-34-167 |
| 1877 283. . | 23-34-253 |
| 1877 284. . | 23-34-120 |
| 1877 285. . | 23-34-120 |
| 1877 286. . | 23-34-120 |
| 1877 287. . | 23-34-120 |
| 1877 288. . | 23-34-120 |
| 1877 289. . | 23-34-120 |
| 1877 308. . | 23-34-233 |
| 1877 309. . | 23-34-233 |
| 1877 310. . . | 23-36-53 |
| 1877 311. . . | 23-36-53 |
| 1877 314. . . | 23-36-53 |
| 1877 315. . . | 23-36-53 |
| 1877 316. . | 23-64-314 |
| 1877 317. . | 23-64-314 |
| 1877 322. . | 23-64-314 |
| 1877 323. . | 23-64-314 |
| 1877 324. . | 23-64-314 |
| 1877 325. . | 23-64-314 |
| 1877 328. . . | 23-40-85 |
| 1877 329. . . | 23-40-85 |
| 1877 330. . . | 23-40-85 |
| 1877 331. . . | 23-40-85 |
| 1877 340. . | 23-34-233 |
| 1877 341. . | 23-34-233 |
| 1877 346. . . | 23-32-48 |
| 1877 350. . | 23-34-176 |
| 1877 351. . | 23-34-176 |
| 1877 353. . | 23-04-241 |
| 1877 354. . | 23-04-241 |
| 1877 355. . | 23-04-250 |
| 1877 358. . . | 23-64-66 |
| 1877 359. . . | 23-64-66 |
| 1877 360. . . | 23-64-66 |
| 1877 361. . . | 23-64-66 |
| 1877 362. . . | 23-64-66 |
| 1877 363. . . | 23-64-66 |
| 1877 364. . . | 23-64-67 |
| 1877 365. . . | 23-64-67 |
| 1877 376. . | 23-34-120 |
| 1877 377. . | 23-34-120 |
| 1877 388. . | 23-34-120 |
| 1877 389. . | 23-34-120 |
| 1877 390. . . | 23-64-67 |
| 1877 391. . . | 23-64-67 |
| 1877 408. . . | 23-40-92 |
| 1877 409. . . | 23-40-92 |
| 1877 450. . . | 23-40-85 |
| 1877 451. . . | 23-40-85 |
| 1877 462. . . | 23-51-41 |
| 1877 463. . . | 23-51-41 |
| 1877 470. . . | 8-55-23 |
| 1877 472. . . | 23-59-37 |
| 1877 473. . . | 23-59-37 |
| 1877 486. . | 23-34-255 |
| 1877 488. . | 23-04-249 |
| 1877 492. . | 23-34-302 |
| 1877 493. . | 23-34-302 |
| 1877 494. . . | 23-51-41 |
| 1877 495. . . | 23-51-41 |
| 1877 516. . | 23-04-249 |
| 1877 520. . | 23-19-185 |
| 1877 521. . | 23-19-185 |
| 1877 522. . . | 23-51-41 |
| 1877 523. . . | 23-51-41 |
| 1877 540. . | 23-19-177 |
| 1877 541. . | 23-19-177 |
| 1877 554. . | 23-63-127 |
| 1877 555. . | 23-63-127 |
| 1877 562. . . | 23-42-13 |
| 1877 563. . . | 23-42-13 |
| 1877 584. . . | 23-19-8 |
| 1877 585. . . | 23-19-8 |
| 1877 590. . | 23-34-235 |
| 1877 592. . | 23-34-235 |
| 1877 593. . | 23-34-235 |
| 1877 595. . | 23-34-235 |
| 1877 660. . | 23-64-308 |
| 1877 661. . | 23-64-308 |
| 1877 662. . | 23-64-308 |
| 1877 663. . | 23-64-308 |
| 1877 668. . . | 23-40-94 |
| 1877 669. . . | 23-40-94 |
| 1877 699. . . | 23-19-53 |
| 1877 742. . | 23-34-302 |
| 1877 743. . | 23-34-302 |
| 1877 746. . | 23-58-224 |
| 1877 747. . | 23-58-224 |
| 1877 749. . . | 23-19-22 |
| 1877 762. . . | 23-32-49 |
| 1877 763. . . | 23-32-49 |
| 1877 768. . . | 23-40-85 |
| 1877 769. . . | 23-40-85 |
| 1877 830. . . | 23-32-49 |
| 1877 831. . . | 23-32-49 |
| 1877 833. . . | 23-34-16 |
| 1877 834. . . | 23-34-17 |
| 1877 840. . | 23-36-125 |
| 1877 841. . | 23-36-125 |
| 1877 855. . | 23-54-150 |
| 1877 926. . . | 23-48-87 |
| 1877 927. . . | 23-48-87 |
| 1877 931. . | 23-54-147 |
| 1877 958. . | 23-64-314 |
| 1877 975. . . | 23-51-41 |
| 1877 994. . . | 23-51-3 |
| 1877 995. . . | 23-51-3 |
| 1878 014. . . | 23-32-67 |
| 1878 112. . | 23-58-393 |
| 1878 128. . . | 8-56-34 |
| 1878 145. . . | 23-04-2 |
| 1878 161. . | 23-64-314 |
| 1878 170. . . | 23-32-65 |
| | 23-48-121 |
| 1878 171. . . | 23-32-65 |
| | 23-48-121 |
| 1878 180. . | 23-64-311 |
| 1878 181. . | 23-64-311 |
| 1878 184. . | 23-64-311 |
| 1878 185. . | 23-64-311 |
| 1878 196. . . | 8-57-10 |
| 1878 204. . | 23-63-181 |
| 1878 238. . . | 23-51-41 |
| 1878 239. . . | 23-51-41 |
| 1878 254. . | 23-36-121 |
| 1878 255. . | 23-36-121 |
| 1878 260. . . | 8-55-23 |
| 1878 261. . . | 8-55-23 |
| 1878 279. . . | 8-55-195 |
| 1878 280. . . . | 8-55-8 |
| 1878 281. . . | 8-55-214 |
| 1878 283. . . . | 8-55-7 |
| 1878 294. . | 23-34-242 |
| 1878 295. . | 23-34-242 |
| 1878 338. . . | 23-40-86 |
| 1878 339. . . | 23-40-86 |
| 1878 340. . . | 23-40-86 |
| 1878 341. . . | 23-40-86 |
| 1878 428. . . | 23-51-41 |
| 1878 429. . . | 23-51-41 |
| 1878 440. . . | 23-26-44 |
| 1878 441. . . | 23-26-44 |
| 1878 444. . | 23-34-302 |
| 1878 445. . | 23-34-302 |
| 1878 450. . . | 23-54-72 |
| 1878 554. . . | 8-57-10 |
| 1878 576. . | 23-34-182 |
| 1878 584. . . | 23-54-59 |
| 1878 585. . . . | 8-56-7 |
| 1878 586. . . | 23-32-56 |
| 1878 587. . . | 23-32-56 |
| 1878 592. . | 23-48-188 |
| 1878 594. . | 23-34-235 |
| 1878 600. . | 23-48-148 |
| 1878 601. . | 23-48-148 |
| 1878 636. . . | 23-32-46 |
| 1878 641. . . | 23-48-28 |
| 1878 644. . | 23-61-103 |
| 1878 645. . | 23-61-103 |
| 1878 650. . | 23-63-181 |
| 1878 652. . . | 23-48-65 |
| 1878 660. . . | 8-56-23 |
| 1878 752. . . | 23-19-21 |
| 1878 755. . | 23-48-180 |
| 1878 758. . . | 23-59-40 |
| 1878 759. . . | 23-59-40 |
| 1878 769. . | 23-48-112 |
| 1878 889. . . | 23-32-56 |
| 1878 893. . . | 8-57-11 |
| 1878 910. . . | 23-48-98 |
| 1878 911. . . | 23-48-98 |
| 1879 242. . . | 8-55-220 |
| 1879 243. . . | 8-55-220 |
| 1879 267. . | 23-67-160 |
| 1879 268. . . . | 5-01-2 |
| 1879 269. . . . | 5-01-2 |
| 1879 270. . . . | 5-01-2 |
| 1879 271. . . . | 5-01-2 |
| 1879 272. . . . | 5-01-2 |
| 1879 273. . . . | 5-01-2 |
| 1879 296. . . | 14-73-1 |
| 1879 303. . . . | 5-39-1 |
| 1879 310. . . | 8-27-279 |
| 1879 319. . . . | 8-52-2 |
| 1879 325. . . . | 9-10-5 |
| | 9-10-6 |
| | 9-10-8 |
| | 9-10-9 |



MyMopar.com

| PART NUMBER | CODE |
|---|---|
| 1879 327. . . . | 9-10-5 |
| | 9-10-6 |
| | 9-10-7 |
| | 9-10-8 |
| | 9-10-9 |
| 1879 328. . . . | 9-10-7 |
| 1879 333. . . . | 9-34-5 |
| 1879 334. . . . | 9-34-5 |
| 1879 335. . . . | 9-34-5 |
| 1879 336. . . . | 9-34-5 |
| 1879 337. . . . | 9-34-5 |
| 1879 338. . . . | 9-34-5 |
| 1879 339. . . . | 9-34-5 |
| 1879 340. . . . | 9-34-5 |
| 1879 348. . . | 8-27-205 |
| 1879 353. . | 19-54-128 |
| 1879 378. . . . | 9-09-2 |
| 1879 379. . . . | 9-09-2 |
| 1879 380. . . . | 9-09-2 |
| 1879 382. . . . | 9-09-2 |
| 1879 391. . . | 8-27-100 |
| 1879 396. . . . | 5-03-1 |
| 1879 398. . . . | 5-03-1 |
| 1879 399. . . . | 5-03-1 |
| 1879 401. . . . | 5-03-1 |
| 1879 404. . . . | 5-03-1 |
| 1879 499. . . | 23-67-25 |
| 1879 506. . | 21-139-28 |
| 1879 507. . . | 21-01-3 |
| 1879 508. . . | 21-118-1 |
| 1879 509. . . | 19-57-2 |
| 1879 520. . . | 10-24-1 |
| 1879 526. . . . | 7-42-1 |
| 1879 536. . . . | 7-42-1 |
| 1879 566. . . | 8-57-54 |
| 1879 568. . . . | 8-29-1 |
| 1879 569. . . | 8-29-146 |
| 1879 571. . . . | 8-29-1 |
| 1879 574. . . . | 8-52-2 |
| 1879 579. . | 24-28-195 |
| 1879 580. . | 24-28-300 |
| 1879 583. . . | 23-67-98 |
| 1879 595. . . | 8-27-278 |
| 1879 596. . . | 8-27-133 |
| 1879 597. . . | 8-27-315 |
| 1879 598. . . | 23-67-10 |
| 1879 599. . | 23-67-164 |
| 1879 601. . . | 23-67-10 |
| | 23-67-61 |
| 1879 602. . | 23-67-164 |
| 1879 606. . . | 8-27-77 |
| 1879 607. . . | 8-27-297 |
| 1879 609. . . . | 8-16-1 |
| 1879 611. . . | 8-52-150 |
| 1879 612. . . | 8-52-275 |
| 1879 613. . . | 8-52-180 |
| 1879 617. . . . | 9-32-2 |
| 1879 618. . . . | 9-32-2 |
| 1879 619. . . . | 9-32-2 |
| 1879 620. . . . | 9-32-2 |
| 1879 621. . . . | 9-32-2 |
| 1879 627. . . . | 9-09-2 |
| 1879 628. . . . | 9-09-2 |
| 1879 629. . . . | 9-09-2 |
| 1879 631. . . . | 9-34-5 |
| 1879 632. . . . | 9-34-5 |
| 1879 633. . . . | 9-34-5 |
| 1879 634. . . . | 9-34-5 |
| 1879 635. . . . | 9-34-5 |
| 1879 636. . . . | 9-34-5 |
| 1879 637. . . . | 9-34-5 |
| 1879 638. . . . | 9-34-5 |
| 1879 639. . . . | 9-34-5 |
| 1879 640. . . . | 9-34-5 |
| 1879 641. . . . | 9-34-5 |
| 1879 642. . . . | 9-34-5 |
| 1879 643. . . . | 9-34-5 |
| 1879 644. . . . | 9-34-5 |
| 1879 645. . . . | 9-34-5 |
| 1879 646. . . . | 9-34-5 |
| 1879 647. . . . | 9-34-5 |
| 1879 648. . . . | 9-34-5 |
| 1879 649. . . . | 9-34-5 |
| 1879 650. . . . | 9-34-5 |
| 1879 652. . . . | 6-17-3 |
| 1879 655. . . . | 6-17-3 |
| 1879 701. . . . | 9-01-5 |
| 1879 702. . . . | 9-01-5 |
| 1879 703. . . . | 9-39-1 |
| 1879 704. . . . | 9-39-1 |
| 1879 708. . . | 19-14-7 |
| 1879 713. . . | 19-14-10 |
| 1879 747. . . . | 9-41-1 |
| 1879 843. . . | 1-48-258 |
| | 24-29-1 |
| 1879 904. . . | 24-01-24 |
| 1879 938. . . | 8-01-17 |
| | 8-52-357 |
| 1879 944. . . . | 8-01-4 |
| 1879 945. . . . | 8-01-4 |
| 1880 211. . | 24-28-199 |
| 1880 222. . . | 1-82-38 |
| 1880 439. . . | 1-48-258 |
| 1880 442. . | 24-28-210 |
| 1880 642. . | 24-28-220 |
| 1880 657. . | 24-28-322 |
| 1880 658. . . | 24-26-20 |
| 1881 647. . . | 2-10-61 |
| 1881 650. . . | 2-10-61 |
| 1881 652. . . . | 2-08-5 |
| 1881 653. . . . | 2-15-4 |
| 1881 654. . . . | 2-15-4 |
| 1881 693. . . . | 9-35-1 |
| 1881 694. . . . | 9-35-1 |
| 1881 695. . . . | 9-35-1 |
| 1881 696. . . . | 9-35-1 |
| 1881 697. . . . | 9-35-1 |
| 1881 698. . . . | 9-35-1 |
| 1881 699. . . . | 9-35-1 |
| 1881 700. . . . | 9-35-1 |
| 1881 701. . . . | 9-35-1 |
| 1881 719. . | 8-29-193 |
| 1881 721. . . | 8-29-19 |
| 1881 722. . . | 8-29-13 |
| 1881 727. . . | 8-52-82 |
| 1881 736. . . | 8-55-219 |
| 1881 740. . . | 8-29-14 |
| 1881 741. . . | 8-29-19 |
| 1881 751. . . | 8-27-218 |
| 1881 752. . . | 8-27-308 |
| 1881 766. . . | 8-27-316 |
| 1881 768. . . | 8-27-208 |
| 1881 804. . . . | 7-14-4 |
| 1881 805. . . . | 7-14-5 |
| 1881 806. . . . | 7-14-4 |
| 1881 809. . . . | 7-14-5 |
| 1881 812. . . . | 7-14-4 |
| 1881 820. . . . | 2-07-1 |
| 1881 821. . . . | 2-07-1 |
| 1881 929. . . | 8-27-308 |
| 1881 938. . . | 8-53-150 |
| 1881 944. . . | 8-27-308 |
| 1881 945. . . | 8-27-278 |
| 1881 946. . . | 8-27-279 |
| 1881 947. . . | 8-27-133 |
| 1881 948. . . | 8-27-308 |
| 1881 965. . . | 14-02-40 |
| 1881 985. . . . | 5-39-1 |
| 1881 987. . . . | 5-39-1 |
| 1882 020. . . | 23-64-66 |
| 1882 021. . . | 23-64-66 |
| 1882 028. . . | 23-15-1 |
| 1882 029. . . | 23-15-1 |
| 1882 034. . | 23-34-233 |
| 1882 035. . | 23-34-233 |
| 1882 036. . | 23-34-233 |
| 1882 037. . | 23-34-233 |
| 1882 040. . | 23-34-233 |
| 1882 041. . | 23-34-233 |
| 1882 048. . . | 23-15-3 |
| 1882 049. . . | 23-15-3 |
| 1882 053. . . | 23-15-9 |
| 1882 054. . . | 23-15-9 |
| 1882 055. . . | 23-15-14 |
| 1882 080. . | 23-34-233 |
| 1882 081. . | 23-34-233 |
| 1882 098. . . | 23-40-86 |
| 1882 099. . . | 23-40-86 |
| 1882 100. . . | 23-40-86 |
| 1882 101. . . | 23-40-86 |
| 1882 130. . . | 23-40-86 |
| 1882 131. . . | 23-40-86 |
| 1882 134. . . | 23-40-86 |
| 1882 135. . . | 23-40-86 |
| 1882 146. . | 23-66-235 |
| 1882 196. . . | 23-19-8 |
| 1882 197. . . | 23-19-8 |
| 1882 286. . | 23-34-179 |
| 1882 391. . | 23-34-179 |
| 1882 393. . | 23-34-179 |
| 1882 400. . . | 23-15-1 |
| 1882 401. . . | 23-15-1 |
| 1882 429. . | 23-34-270 |
| 1882 734. . . | 23-32-48 |
| 1882 735. . . | 23-19-21 |
| 1882 884. . . | 23-36-6 |
| 1882 885. . . | 23-36-6 |
| 1882 886. . . | 23-20-14 |
| 1882 887. . . | 23-20-14 |
| 1882 888. . . | 23-20-14 |
| 1882 889. . . | 23-20-14 |
| 1882 890. . . | 23-20-14 |
| 1882 891. . . | 23-20-14 |
| 1882 892. . . | 23-20-14 |
| 1882 893. . . | 23-20-14 |
| 1882 894. . . | 23-20-14 |
| 1882 895. . . | 23-20-14 |
| 1882 896. . . | 23-20-14 |
| 1882 897. . . | 23-20-14 |
| 1882 898. . . | 23-20-14 |
| 1882 899. . . | 23-20-14 |
| 1882 900. . . | 23-20-14 |
| 1882 901. . . | 23-20-14 |
| 1882 902. . . | 23-20-14 |
| 1882 903. . . | 23-20-14 |
| 1882 913. . | 23-22-145 |
| 1882 915. . | 23-22-145 |
| 1882 918. . | 23-22-145 |
| 1882 919. . | 23-22-145 |
| 1882 946. . . | 23-26-41 |
| 1882 947. . . | 23-26-41 |
| 1882 950. . . | 23-26-41 |
| 1882 951. . . | 23-26-41 |
| 1882 955. . . | 23-22-86 |
| 1882 961. . . | 23-15-11 |
| 1882 963. . . | 23-15-14 |
| 1882 964. . . | 23-15-9 |
| 1882 965. . . | 23-15-9 |
| 1882 967. . . | 23-15-6 |
| 1882 998. . . | 23-22-86 |
| 1882 999. . . | 23-22-86 |
| 1883 002. . . | 23-22-86 |
| 1883 003. . . | 23-22-86 |
| 1883 006. . . | 23-22-53 |
| 1883 007. . . | 23-22-53 |
| 1883 014. . . | 23-22-53 |
| 1883 015. . . | 23-22-53 |
| 1883 022. . . | 23-22-53 |
| 1883 023. . . | 23-22-53 |
| 1883 084. . . | 23-22-7 |
| 1883 085. . . | 23-22-7 |
| 1883 092. . . | 23-22-7 |
| 1883 093. . . | 23-22-7 |
| 1883 100. . . | 23-22-53 |
| 1883 101. . . | 23-22-53 |
| 1883 116. . . | 23-22-7 |
| 1883 117. . . | 23-22-7 |
| 1883 128. . . | 23-22-7 |
| 1883 129. . . | 23-22-7 |
| 1883 132. . . | 23-22-7 |
| 1883 133. . . | 23-22-7 |
| 1883 148. . . | 23-22-7 |
| 1883 149. . . | 23-22-7 |
| 1883 156. . . | 23-22-7 |
| 1883 157. . . | 23-22-7 |
| 1883 160. . . | 23-22-7 |
| 1883 161. . . | 23-22-7 |
| 1883 168. . . | 23-22-7 |
| 1883 169. . . | 23-22-7 |
| 1883 176. . . | 23-22-7 |
| 1883 177. . . | 23-22-7 |
| 1883 268. . | 23-64-308 |
| 1883 269. . | 23-64-308 |
| 1883 271. . | 23-64-308 |
| 1883 272. . | 23-64-308 |
| 1883 290. . . | 23-63-55 |
| 1883 291. . . | 23-63-55 |
| 1883 294. . . | 23-63-55 |
| 1883 295. . . | 23-63-55 |
| 1883 296. . | 23-34-302 |
| 1883 297. . | 23-34-302 |
| 1883 347. . . | 23-32-48 |
| 1883 494. . . | 23-39-5 |
| 1883 495. . . | 23-39-5 |
| 1883 500. . . | 23-63-14 |
| | 23-63-15 |
| 1883 504. . . | 23-63-33 |
| 1883 512. . . | 23-63-14 |
| | 23-63-15 |
| 1883 513. . . | 23-63-14 |
| | 23-63-15 |
| 1883 514. . . | 23-63-15 |
| 1883 515. . . | 23-63-15 |
| 1883 518. . . | 23-63-14 |
| | 23-63-20 |
| 1883 520. . . | 23-63-33 |
| 1883 554. . | 23-64-275 |
| 1883 568. . . | 23-39-5 |
| 1883 569. . . | 23-39-5 |
| 1883 654. . . | 23-32-77 |
| 1883 740. . . | 23-08-12 |
| 1883 782. . | 23-34-176 |
| | 23-34-236 |
| 1883 783. . | 23-34-176 |
| | 23-34-236 |
| 1883 802. . . | 23-15-6 |
| 1883 819. . . | 23-09-17 |
| 1883 848. . | 23-34-177 |
| 1883 849. . | 23-34-177 |
| 1883 884. . | 23-64-254 |
| 1883 885. . | 23-64-254 |
| 1883 896. . . | 23-17-9 |



MyMopar.com

| PART NUMBER | CODE |
|---|---|
| 1884 405. . . | 23-15-11 |
| 1884 420. . . | 23-20-14 |
| 1884 421. . . | 23-20-14 |
| 1884 422. . . | 23-20-14 |
| 1884 423. . . | 23-20-14 |
| 1884 424. . . | 23-20-14 |
| 1884 425. . . | 23-20-14 |
| 1884 426. . . | 23-20-14 |
| 1884 427. . . | 23-20-14 |
| 1884 448. . . | 23-15-1 |
| 1884 449. . . | 23-15-1 |
| 1884 452. . . | 23-20-14 |
| 1884 453. . . | 23-20-14 |
| 1884 454. . . | 23-20-14 |
| 1884 455. . . | 23-20-14 |
| 1884 456. . . | 23-20-14 |
| 1884 457. . . | 23-20-14 |
| 1884 486. . . | 23-18-25 |
| 1884 487. . . | 23-18-25 |
| 1884 488. . . | 23-18-25 |
| 1884 489. . . | 23-18-25 |
| 1884 490. . . | 23-39-34 |
| 1884 491. . . | 23-39-34 |
| 1884 492. . . | 23-39-34 |
| 1884 493. . . | 23-39-34 |
| 1884 494. . . | 23-39-34 |
| 1884 495. . . | 23-39-34 |
| 1884 504. . | 23-58-476 |
| 1884 505. . | 23-58-476 |
| 1884 506. . | 23-58-476 |
| 1884 507. . | 23-58-476 |
| 1884 508. . | 23-58-476 |
| 1884 509. . | 23-58-476 |
| 1884 522. . | 23-64-280 |
| 1884 523. . | 23-64-280 |
| 1884 532. . . | 23-36-66 |
| 1884 533. . . | 23-36-66 |
| 1884 538. . . | 23-40-86 |
| 1884 539. . . | 23-40-86 |
| 1884 562. . . | 23-64-68 |
| 1884 563. . . | 23-64-68 |
| 1884 580. . | 23-58-469 |
| 1884 581. . | 23-58-469 |
| 1884 582. . | 23-58-469 |
| 1884 583. . | 23-58-469 |
| 1884 584. . | 23-58-394 |
| 1884 585. . | 23-58-394 |
| 1884 586. . | 23-58-394 |
| 1884 587. . | 23-58-394 |
| 1884 588. . | 23-58-486 |
| 1884 589. . | 23-58-486 |
| 1884 590. . | 23-58-486 |
| 1884 591. . | 23-58-486 |
| 1884 592. . | 23-58-486 |
| 1884 593. . | 23-58-486 |
| 1884 594. . | 23-58-486 |
| 1884 595. . | 23-58-486 |
| 1884 608. . | 23-58-473 |
| 1884 609. . | 23-58-473 |
| 1884 610. . . | 23-64-70 |
| 1884 611. . . | 23-64-70 |
| 1884 612. . . | 23-64-70 |
| 1884 613. . . | 23-64-70 |
| 1884 614. . | 23-19-177 |
| 1884 615. . | 23-19-177 |
| 1884 616. . | 23-19-177 |
| 1884 617. . | 23-19-177 |
| 1884 620. . . | 23-19-84 |
| 1884 621. . . | 23-19-84 |
| 1884 630. . . | 23-19-82 |
| 1884 631. . . | 23-19-82 |
| 1884 632. . . | 23-19-82 |
| 1884 633. . . | 23-19-82 |
| 1884 638. . . | 23-40-92 |
| 1884 639. . . | 23-40-92 |
| 1884 700. . . | 23-36-53 |
| 1884 701. . . | 23-36-53 |
| 1884 730. . . | 23-36-53 |
| 1884 731. . . | 23-36-53 |
| 1884 737. . . | 23-48-6 |
| 1884 828. . . | 23-22-53 |
| 1884 829. . . | 23-22-53 |
| 1884 847. . | 23-63-112 |
| 1884 848. . | 23-63-112 |
| 1884 868. . . | 23-40-92 |
| 1884 869. . . | 23-40-92 |
| 1884 888. . | 23-64-308 |
| 1884 889. . | 23-64-308 |
| 1884 976. . . | 23-23-32 |
| 1884 977. . . | 23-23-32 |
| 1884 978. . . | 23-23-32 |
| 1884 979. . . | 23-23-32 |
| 1884 980. . . | 23-23-32 |
| 1884 981. . . | 23-23-32 |
| 1884 982. . . | 23-23-33 |
| 1884 983. . . | 23-23-33 |
| 1884 984. . . | 23-23-33 |
| 1884 985. . . | 23-23-33 |
| 1885 608. . . | 24-24-7 |
| 1885 637. . . | 8-21-1 |
| 1885 692. . | 24-28-318 |
| 1885 824. . . | 24-29-1 |
| 1885 826. . . | 1-48-88 |
| 1885 901. . . | 24-28-70 |
| 1885 974. . . | 14-02-32 |
| 1885 977. . . | 21-30-28 |
| 1886 011. . | 24-28-318 |
| 1886 109. . | 24-28-318 |
| 1886 178. . . | 24-24-5 |
| 1886 202. . . | 23-67-80 |
| 1886 232. . . | 24-28-5 |
| 1886 249. . | 24-28-220 |
| 1886 266. . | 24-28-195 |
| 1886 288. . . | 14-02-32 |
| 1886 313. . . | 14-02-26 |
| 1886 328. . . | 24-25-17 |
| 1886 549. . . | 1-48-607 |
| 1886 557. . . | 23-67-61 |
| 1886 558. . . | 23-67-16 |
| 1886 696. . | 23-67-163 |
| 1886 713. . . | 1-88-159 |
| 1886 769. . . | 1-82-14 |
| | 23-67-160 |
| 1886 770. . . | 1-82-14 |
| | 23-67-160 |
| 1886 832. . . | 1-82-14 |
| 1886 858. . . | 1-48-151 |
| 1886 949. . . | 23-41-25 |
| 1887 001. . . | 23-67-85 |
| 1887 041. . | 23-54-167 |
| 1887 106. . | 24-26-100 |
| 1887 126. . . | 8-34-1 |
| 1887 127. . . | 8-34-1 |
| 1887 128. . . | 8-34-1 |
| 1887 129. . . | 8-34-1 |
| 1887 148. . . | 1-82-25 |
| 1887 210. . . | 8-34-1 |
| 1887 211. . . | 8-34-1 |
| 1887 212. . . | 8-34-1 |
| 1887 213. . . | 8-34-1 |
| 1887 214. . . | 8-34-1 |
| 1887 215. . . | 8-34-1 |
| 1887 216. . . | 8-34-1 |
| 1887 217. . . | 8-34-1 |
| 1887 218. . . | 8-34-1 |
| 1887 219. . . | 8-34-1 |
| 1887 220. . . | 8-34-1 |
| 1887 221. . . | 8-34-1 |
| 1887 222. . . | 8-20-3 |
| 1887 319. . . | 1-82-6 |
| 1887 321. . . | 1-82-6 |
| 1887 329. . . | 8-42-5 |
| 1887 364. . | 24-28-300 |
| 1887 401. . | 24-28-195 |
| 1887 426. . . | 1-48-942 |
| 1887 453. . | 24-24-159 |
| 1887 501. . . | 24-28-70 |
| 1887 511. . . | 1-48-4 |
| 1887 542. . . | 1-87-70 |
| 1887 558. . . | 14-02-2 |
| 1887 560. . . | 14-02-14 |
| 1887 562. . . | 14-02-8 |
| 1887 564. . . | 14-02-20 |
| 1887 565. . . | 14-02-4 |
| 1887 591. . . | 1-48-191 |
| | 23-54-169 |
| | 23-58-534 |
| | 23-67-194 |
| | 24-24-20 |
| | 24-24-160 |
| 1887 593. . . | 8-20-8 |
| 1887 596. . . | 8-53-296 |
| 1887 601. . . | 8-53-294 |
| 1887 602. . | 23-67-195 |
| 1887 603. . . | 1-48-309 |
| | 23-54-171 |
| | 23-58-533 |
| | 23-67-161 |
| 1887 643. . . | 1-48-12 |
| 1887 644. . . | 1-48-12 |
| 1887 645. . . | 1-48-12 |
| 1887 646. . . | 1-48-12 |
| 1887 647. . . | 1-48-12 |
| 1887 657. . . | 21-84-4 |
| 1887 667. . . | 1-48-12 |
| 1887 668. . . | 1-48-12 |
| 1887 669. . . | 1-48-12 |
| 1887 670. . . | 1-48-12 |
| 1887 671. . . | 1-48-12 |
| 1887 672. . | 24-24-164 |
| 1887 674. . | 24-24-164 |
| 1887 699. . . | 1-48-4 |
| 1887 714. . . | 1-48-12 |
| 1887 715. . . | 1-48-12 |
| 1887 716. . . | 1-48-12 |
| 1887 717. . . | 1-48-12 |
| 1887 718. . . | 1-48-12 |
| 1887 726. . . | 8-19-83 |
| 1887 757. . . | 1-48-126 |
| | 24-28-176 |
| 1887 768. . . | 8-15-4 |
| 1887 784. . . | 8-40-9 |
| | 8-53-273 |
| | 23-67-190 |
| 1887 787. . . | 8-20-16 |
| 1887 789. . . | 8-05-20 |
| | 8-42-29 |
| | 23-54-170 |
| | 23-67-195 |
| 1887 792. . . | 14-02-2 |
| 1887 794. . . | 14-02-30 |
| 1887 798. . . | 14-02-4 |
| 1887 819. . . | 1-48-12 |
| 1887 820. . . | 1-48-12 |
| 1887 821. . . | 1-48-12 |
| 1887 822. . . | 1-48-12 |
| 1887 823. . . | 1-48-12 |
| 1887 835. . | 24-24-159 |
| 1887 859. . . | 8-53-296 |
| 1887 860. . . | 1-48-191 |
| | 8-05-16 |
| | 8-42-31 |
| | 23-54-169 |
| | 23-58-534 |
| | 23-67-194 |
| | 24-24-20 |
| | 24-24-160 |
| 1887 871. . . | 8-53-296 |
| 1887 874. . . | 1-82-23 |
| | 23-67-194 |
| 1887 876. . . | 8-20-8 |
| 1887 908. . . | 14-02-34 |
| 1887 909. . . | 1-48-191 |
| | 8-05-16 |
| | 8-42-31 |
| | 23-67-194 |
| | 24-24-160 |
| 1887 920. . . | 8-20-8 |
| 1887 922. . . | 8-37-372 |
| 1887 923. . . | 8-37-162 |
| 1887 926. . . | 8-50-175 |
| 1887 933. . . | 8-53-296 |
| 1887 934. . | 23-67-194 |
| 1887 935. . . | 1-48-191 |
| | 8-42-31 |
| | 23-58-534 |
| | 24-24-160 |
| 1887 946. . | 23-54-167 |
| 1887 953. . . | 8-20-7 |
| 1887 955. . . | 8-42-6 |
| 1887 962. . | 23-67-195 |
| 1887 963. . . | 8-53-294 |
| 1887 970. . . | 8-34-1 |
| 1887 971. . . | 8-34-1 |
| 1887 972. . . | 8-34-1 |
| 1887 973. . . | 8-34-1 |
| 1887 980. . . | 8-34-1 |
| 1887 981. . . | 8-34-1 |
| 1887 982. . . | 8-34-1 |
| 1887 983. . . | 8-34-1 |
| 1887 984. . . | 8-53-271 |
| 1887 987. . . | 8-53-296 |
| 1887 989. . . | 1-82-23 |
| | 23-67-194 |
| 1887 991. . . | 1-48-191 |
| | 8-05-16 |
| | 8-42-31 |
| | 23-33-226 |
| | 23-67-194 |
| | 24-24-20 |
| | 24-24-160 |
| 1889 044. . . | 8-52-150 |
| 1889 079. . . | 8-52-120 |
| 1889 080. . . | 8-52-241 |
| 1889 129. . . | 8-52-41 |
| 1889 146. . . | 8-52-345 |
| 1889 147. . . | 8-52-88 |
| 1889 154. . . | 8-52-76 |
| 1889 200. . . | 8-52-4 |
| 1889 235. . . | 8-29-154 |
| 1889 242. . . | 8-27-207 |
| 1889 260. . . | 8-52-4 |
| 1889 262. . . | 8-52-76 |
| 1889 349. . . | 8-29-146 |
| 1889 350.. . . | 8-29-1 |
| 1889 351. . . | 8-29-146 |
| 1889 353. . . | 8-29-1 |
| 1889 363. . . | 8-52-176 |
| 1889 371. . . | 8-28-299 |
| 1889 372. . . | 8-28-3 |
| 1889 373. . . | 8-28-3 |



MyMopar.com

| PART NUMBER | CODE |
|---|---|
| 1889 398. . . . | 8-28-3 |
| 1889 400. . . . | 8-28-3 |
| 1889 424. . . | 8-27-71 |
| 1889 428. . . | 8-27-138 |
| 1889 517. . . | 8-36-117 |
| 1889 519. . . | 8-27-279 |
| 1889 520. . . | 8-36-114 |
| 1889 521. . . | 8-36-114 |
| 1889 522. . . | 8-36-114 |
| 1889 538. . . | 8-27-279 |
| 1889 548. . . | 8-27-279 |
| 1889 560. . . . | 8-27-1 |
| 1889 562. . . . | 8-27-1 |
| 1889 564. . . . | 8-27-1 |
| 1889 568. . . . | 8-27-1 |
| 1889 570. . . . | 8-27-1 |
| 1889 607. . . | 8-27-297 |
| 1889 683. . . | 8-27-250 |
| 1889 684. . . | 8-27-250 |
| 1889 710. . . . | 8-27-1 |
| 1889 788. . . | 8-27-205 |
| 1889 799. . . | 8-52-330 |
| 1889 860. . . | 8-36-114 |
| 1889 907. . . | 8-52-80 |
| 1889 921. . . | 8-36-117 |
| 1889 938. . . | 8-52-13 |
| 1889 944. . . | 8-28-74 |
| 1889 960. . . | 8-28-74 |
| 1900 762. . . | 23-26-34 |
| 1900 763. . . | 15-03-60 |
| 1900 856. . . | 23-14-27 |
| 1900 857. . . | 23-14-27 |
| 1900 860. . . | 23-14-27 |
| 1900 861. . . | 23-14-27 |
| 1900 870. . . | 23-14-18 |
| 1900 872. . . | 23-14-24 |
| 1900 878. . . | 23-02-40 |
| 1900 922. . . | 23-26-23 |
| 1900 923. . . | 23-26-23 |
| 1900 958. . . | 23-26-23 |
| 1900 959. . . | 23-26-23 |
| 1900 972. . . | 23-26-23 |
| 1900 973. . . | 23-26-23 |
| 1900 984. . . | 23-26-23 |
| 1900 985. . . | 23-26-23 |
| 1901 564. . | 23-33-220 |
| 1901 565. . . | 1-48-70 |
| 1901 580. . | 23-33-220 |
| 1901 581. . | 23-33-220 |
| 1901 587. . . | 19-31-19 |
| 1901 691. . . | 8-20-17 |
| | 23-06-13 |
| | 23-06-21 |
| | 23-45-58 |
| | 23-47-14 |
| 1901 727. . . | 23-06-21 |
| 1901 734. . . | 23-06-10 |
| 1901 739. . . | 23-02-18 |
| 1901 751. . . | 23-02-19 |
| 1901 764. . . | 23-06-13 |
| 1901 774. . . . | 5-27-9 |
| 1901 779. . . | 23-33-56 |
| 1901 783. . | 23-33-109 |
| 1901 784. . . | 23-06-4 |
| 1901 788. . . . | 5-27-9 |
| 1901 789. . . | 23-33-12 |
| 1901 790. . . | 23-06-13 |
| 1901 793. . . | 23-06-4 |
| 1901 799. . | 23-33-109 |
| 1901 801. . . . | 5-27-9 |
| 1901 802. . . | 23-33-10 |
| 1901 807. . | 23-33-109 |
| 1901 808. . . | 23-06-4 |
| 1901 811. . . | 23-33-12 |
| 1901 826. . . | 23-02-18 |
| 1901 828. . . | 23-06-4 |
| | 23-06-102 |
| 1901 838. . . | 1-76-24 |
| | 23-21-74 |
| 1901 844. . . | 23-02-43 |
| 1901 845. . . | 23-02-43 |
| 1901 847. . . | 23-06-53 |
| 1901 848. . . | 23-06-53 |
| 1901 849. . . | 23-06-53 |
| 1901 859. . | 23-33-213 |
| 1901 866. . . | 23-22-53 |
| 1901 867. . . | 23-22-53 |
| 1901 876. . | 23-33-135 |
| 1901 931. . . | 23-06-10 |
| 1901 938. . . | 23-02-18 |
| 1901 944. . . | 23-02-19 |
| 1901 969. . . | 23-22-86 |
| 1901 970. . . | 23-22-86 |
| 1901 971. . . | 23-22-86 |
| 1901 972. . . | 23-22-86 |
| 1901 973. . | 23-22-152 |
| 1901 974. . | 23-22-145 |
| 1901 975. . | 23-22-145 |
| 1901 978. . . | 23-26-41 |
| 1901 979. . . | 23-26-41 |
| 1901 980. . . | 23-26-41 |
| 1901 981. . . | 23-26-41 |
| 1901 982. . . | 23-26-41 |
| 1901 983. . . | 23-26-41 |
| 1901 984. . . | 23-26-41 |
| 1901 985. . . | 23-26-41 |
| 1901 986. . . | 23-22-86 |
| 1901 987. . . | 23-22-86 |
| 1901 988. . . | 23-22-86 |
| 1901 989. . . | 23-22-86 |
| 1901 990. . . | 23-22-85 |
| 1901 991. . . | 23-22-85 |
| 1901 992. . . | 23-22-86 |
| 1901 993. . . | 23-22-86 |
| 1901 994. . . | 23-22-53 |
| 1901 995. . . | 23-22-53 |
| 1901 996. . | 23-22-145 |
| 1901 997. . | 23-22-145 |
| 1901 998. . | 23-22-145 |
| 1901 999. . | 23-22-145 |
| 1902 000. . . | 23-22-86 |
| 1902 001. . . | 23-22-86 |
| 1902 002. . . | 23-22-53 |
| 1902 003. . . | 23-22-53 |
| 1902 031. . . | 23-45-53 |
| 1902 053. . . | 23-21-8 |
| 1902 091. . | 23-33-132 |
| 1902 108. . . | 23-47-8 |
| 1902 109. . . | 23-47-8 |
| 1902 138. . . . | 1-76-3 |
| | 23-21-8 |
| 1902 154. . . | 23-33-26 |
| 1902 173. . . | 23-33-37 |
| 1902 176. . . | 23-06-13 |
| 1902 177. . . | 23-06-13 |
| 1902 201. . . | 23-06-21 |
| 1902 210. . . | 19-31-1 |
| 1902 217. . . | 23-47-55 |
| 1902 220. . . | 23-33-86 |
| 1902 223. . . | 19-31-1 |
| 1902 272. . . | 23-33-56 |
| | 23-33-135 |
| 1902 273. . . | 23-33-56 |
| | 23-33-135 |
| 1902 274. . | 23-22-145 |
| 1902 275. . | 23-22-145 |
| 1902 288. . . | 15-14-10 |
| 1902 297. . | 23-54-195 |
| 1902 298. . . | 8-05-23 |
| 1902 304. . . | 23-22-53 |
| 1902 305. . . | 23-22-53 |
| 1902 306. . . | 23-22-53 |
| 1902 307. . . | 23-22-53 |
| 1902 308. . . | 23-26-41 |
| 1902 309. . . | 23-26-41 |
| 1902 310. . . | 23-33-86 |
| 1902 311. . . | 23-33-86 |
| 1902 313. . . | 23-06-49 |
| 1902 315. . . | 23-33-96 |
| 1902 328. . . | 1-48-70 |
| 1902 329. . | 23-33-220 |
| 1902 330. . | 23-33-220 |
| 1902 331. . | 23-33-220 |
| 1902 333. . . | 19-14-77 |
| 1902 337. . . | 23-02-18 |
| 1902 340. . . | 19-14-35 |
| | 19-31-24 |
| 1902 347. . . | 1-48-26 |
| | 23-33-227 |
| 1902 348. . . | 23-26-41 |
| 1902 349. . . | 23-26-41 |
| 1902 350. . . | 23-47-26 |
| 1902 357. . | 23-33-220 |
| 1902 361. . | 23-33-220 |
| 1902 374. . . | 23-02-12 |
| 1902 375. . . | 23-02-11 |
| | 23-02-150 |
| 1902 392. . . | 23-26-58 |
| 1902 393. . . | 23-26-58 |
| 1902 399. . | 23-33-132 |
| 1902 406. . | 23-54-180 |
| 1902 409. . | 23-54-186 |
| 1902 410. . | 23-54-190 |
| 1902 430. . . | 23-06-53 |
| 1902 476. . . | 23-26-62 |
| 1902 477. . . | 23-26-62 |
| 1902 716. . . . | 7-26-5 |
| 1902 720. . . . | 7-08-2 |
| 1902 763. . . | 7-26-18 |
| 1902 799. . . | 7-31-23 |
| 1902 862. . . | 7-26-24 |
| 1902 900. . . | 8-50-303 |
| 1902 901. . . | 8-50-303 |
| 1902 906. . . | 8-50-335 |
| 1902 907. . . | 8-50-335 |
| 1902 910. . . | 8-50-338 |
| 1902 924. . . | 8-50-303 |
| 1902 925. . . | 8-50-303 |
| 1902 932. . . | 8-50-335 |
| 1902 933. . . | 8-50-335 |
| 1902 934. . . | 8-50-338 |
| 1902 958. . . | 7-26-15 |
| 1902 964. . . . | 7-26-3 |
| 1902 965. . . . | 7-26-3 |
| 1902 970. . . . | 7-33-4 |
| 1903 009. . . | 15-11-3 |
| 1903 011. . | 12-01-105 |
| 1903 036. . . | 7-31-45 |
| 1903 064. . . | 7-16-79 |
| 1903 142. . . | 8-34-40 |
| 1903 143. . . | 8-34-40 |
| 1903 224. . . | 15-03-3 |
| 1903 237. . . | 7-16-11 |
| 1903 241. . . | 7-16-14 |
| 1903 242. . . | 7-16-14 |
| 1903 243. . . | 7-16-14 |
| 1903 261. . . | 7-16-84 |
| 1903 264. . . | 12-15-23 |
| 1903 265. . . | 12-15-23 |
| 1903 274. . . | 12-15-8 |
| 1903 275. . . | 12-15-8 |
| 1903 279. . . | 15-11-38 |
| 1903 281. . . . | 7-26-1 |
| 1903 285. . . | 15-13-5 |
| 1903 310. . | 12-10-105 |
| 1903 324. . . . | 7-11-3 |
| 1903 326. . . . | 7-11-3 |
| 1903 334. . . . | 7-11-3 |
| 1903 335. . . . | 7-11-3 |
| 1903 336. . . . | 7-11-3 |
| 1903 337. . . . | 7-11-3 |
| 1903 338. . . . | 7-11-3 |
| 1903 356. . . . | 7-11-3 |
| 1903 357. . . . | 7-11-3 |
| 1903 358. . . . | 7-11-3 |
| 1903 369. . . . | 7-11-3 |
| 1903 370. . . . | 7-11-3 |
| 1903 371. . . . | 7-11-3 |
| 1903 387. . . | 8-50-349 |
| 1903 394. . . | 7-16-63 |
| 1903 395. . . | 15-19-4 |
| 1903 396. . . | 12-01-12 |
| 1903 397. . . | 12-01-16 |
| 1903 406. . . | 7-31-10 |
| 1903 409. . . | 7-31-10 |
| 1903 424. . . | 12-01-5 |
| 1903 425. . . | 12-01-5 |
| 1903 455. . . | 15-09-4 |
| 1903 457. . . | 7-26-15 |
| 1903 476. . . | 15-11-12 |
| 1903 478. . . | 12-01-16 |
| | 15-09-22 |
| 1903 513. . . | 12-01-16 |
| 1903 517. . . | 8-50-349 |
| 1903 536. . . . | 7-17-1 |
| 1903 538. . . . | 7-17-2 |
| 1903 540. . . | 7-16-63 |
| 1903 550. . . | 7-16-11 |
| 1903 551. . . | 7-16-11 |
| 1903 552. . . | 7-16-11 |
| 1903 553. . . | 7-16-11 |
| 1903 554. . . | 7-16-11 |
| 1903 555. . . | 7-16-11 |
| 1903 556. . . | 7-16-11 |
| 1903 557. . . | 7-16-11 |
| 1903 571. . . | 8-50-306 |
| | 8-50-337 |
| 1903 600. . . . | 7-08-2 |
| 1903 604. . . | 15-28-1 |
| 1903 605. . . | 12-15-21 |
| | 12-15-30 |
| 1903 606. . . | 12-15-30 |
| 1903 616. . . | 8-34-40 |
| 1903 617. . . | 8-34-40 |
| 1903 620. . . | 12-15-21 |
| 1903 634. . . | 7-16-22 |
| 1903 638. . . | 7-16-11 |
| 1903 639. . . | 7-16-11 |
| 1903 640. . . | 7-16-11 |
| 1903 646. . . | 7-16-63 |
| 1903 647. . . | 7-16-63 |
| 1903 656. . . | 7-16-22 |
| 1903 657. . . | 7-16-22 |
| 1903 676. . . | 7-26-15 |
| 1903 677. . . | 15-19-4 |
| 1903 688. . . | 12-07-1 |
| 1903 689. . . | 12-07-1 |
| 1903 702. . . | 7-16-11 |
| 1903 733. . . | 7-31-23 |
| 1903 735. . . | 7-16-22 |
| 1903 740. . . | 7-16-22 |
| 1903 754. . . | 8-50-338 |


MyMopar.com

| PART NUMBER | CODE |
|---|---|
| 1903 756. . . | 8-50-303 |
| 1903 757. . . | 8-50-303 |
| 1903 762. . . | 8-50-335 |
| 1903 763. . . | 8-50-335 |
| 1903 766. . . | 8-34-40 |
| 1903 767. . . | 8-34-40 |
| 1903 779. . . | 12-15-23 |
| 1903 783. . . | 15-11-3 |
| 1903 791. . . | 9-46-31 |
| 1903 792. . . | 9-46-31 |
| 1903 852. . . | 12-01-5 |
| 1903 853. . . | 12-01-5 |
| 1903 857. . . | 7-31-10 |
| 1903 884. . . | 12-06-3 |
| 1903 885. . . | 12-06-3 |
| 1903 930. . . | 15-19-2 |
| 1903 931. . . | 15-19-2 |
| 1903 932. . . | 15-03-3 |
| 1903 941. . . | 7-26-15 |
| 1903 948. . . | 12-07-1 |
| 1903 949. . . | 12-07-1 |
| 1903 968. . . | 15-03-3 |
| 1903 972. . . | 12-01-5 |
| 1903 973. . . | 12-01-5 |
| 1903 976. . . | 7-16-12 |
| 1904 485. . . | 15-11-3 |
| 1904 583. . . | 15-11-3 |
| 1904 667. . . | 15-11-58 |
| 1909 302. . | 23-64-265 |
| 1909 303. . | 23-64-265 |
| 1909 304. . | 23-64-265 |
| 1909 305. . | 23-64-265 |
| 1909 308. . . | 23-19-84 |
| 1909 309. . . | 23-19-84 |
| 1909 312. . . | 23-34-80 |
| 1909 313. . | 23-34-166 |
| 1909 314. . | 23-34-166 |
| 1909 315. . | 23-34-166 |
| 1909 316. . | 23-34-166 |
| 1909 319. . | 23-34-354 |
| 1909 320. . . | 23-64-66 |
| 1909 321. . . | 23-64-66 |
| 1909 322. . . | 23-64-66 |
| 1909 323. . . | 23-64-66 |
| 1909 324. . . | 23-34-80 |
| 1909 325. . . | 23-34-80 |
| 1909 386. . . | 23-42-56 |
| 1909 387. . . | 23-42-56 |
| 1909 410. . . | 23-19-82 |
| 1909 411. . . | 23-19-82 |
| 1909 416. . | 23-34-177 |
| 1909 417. . | 23-34-177 |
| 1909 421. . . | 23-15-7 |
| 1909 425. . . | 23-38-23 |
| 1909 430. . | 23-64-174 |
| 1909 431. . | 23-64-174 |
| 1909 432. . | 23-64-174 |
| 1909 433. . | 23-64-174 |
| 1909 441. . | 23-61-116 |
| 1909 456. . . | 23-63-20 |
| | 23-63-21 |
| 1909 458. . . | 23-63-20 |
| 1909 459. . . | 23-63-20 |
| 1909 466. . | 23-58-228 |
| 1909 472. . . | 23-54-3 |
| 1909 473. . . | 23-54-3 |
| 1909 474. . . | 23-51-41 |
| 1909 475. . . | 23-51-41 |
| 1909 488. . . | 23-22-55 |
| 1909 489. . . | 23-22-55 |
| 1909 490. . . | 23-22-55 |
| 1909 491. . . | 23-22-55 |
| 1909 508. . . | 23-51-41 |
| 1909 509. . . | 23-51-41 |
| 1909 510. . . | 23-51-41 |
| 1909 511. . . | 23-51-41 |
| 1909 529. . . | 23-64-12 |
| 1909 530. . . | 23-64-12 |
| 1909 548. . . | 23-19-82 |
| 1909 549. . . | 23-19-82 |
| 1909 604. . . | 23-23-41 |
| 1909 605. . . | 23-23-41 |
| 1909 608. . . | 23-64-68 |
| 1909 609. . . | 23-64-68 |
| 1909 616. . . | 23-23-41 |
| 1909 617. . . | 23-23-41 |
| 1909 624. . . | 23-59-61 |
| 1909 625. . . | 23-59-61 |
| 1909 627. . . | 23-59-61 |
| 1909 636. . . | 23-59-61 |
| 1909 637. . . | 23-59-61 |
| 1909 669. . | 23-63-173 |
| 1909 678. . . | 23-19-92 |
| 1909 682. . | 23-64-174 |
| 1909 683. . | 23-64-174 |
| 1909 684. . | 23-64-174 |
| 1909 685. . | 23-64-174 |
| 1909 688. . | 23-64-174 |
| 1909 689. . | 23-64-174 |
| 1909 690. . | 23-64-174 |
| 1909 691. . | 23-64-174 |
| 1909 698. . | 23-64-265 |
| 1909 699. . | 23-64-265 |
| 1909 700. . | 23-64-265 |
| 1909 701. . | 23-64-265 |
| 1909 708. . . | 23-09-13 |
| 1909 710. . | 23-64-265 |
| 1909 711. . | 23-64-265 |
| 1909 712. . | 23-64-265 |
| 1909 713. . | 23-64-265 |
| 1909 754. . . | 8-55-23 |
| 1909 755. . . | 8-55-23 |
| 1909 844. . . | 23-23-33 |
| 1909 845. . . | 23-23-33 |
| 1909 856. . | 23-64-273 |
| 1909 892. . . | 23-36-5 |
| 1909 893. . . | 23-36-5 |
| 1909 914. . . | 23-58-78 |
| 1909 917. . | 23-64-278 |
| 1909 975. . . | 23-15-17 |
| 1916 840. . . | 23-47-8 |
| 1916 852. . . | 23-47-8 |
| 1918 529. . . | 23-45-12 |
| 1918 551. . . | 23-45-20 |
| 1919 024. . . | 23-36-53 |
| 1919 025. . . | 23-36-53 |
| 1921 471. . . | 21-09-19 |
| 1921 472. . . | 21-09-23 |
| | 21-14-20 |
| | 21-16-17 |
| 1921 473. . . | 21-09-25 |
| 1921 475. . . | 21-09-33 |
| 1921 480. . . | 21-04-2 |
| 1921 481. . . | 21-19-15 |
| 1921 482. . . | 21-17-2 |
| 1921 483. . . | 21-10-16 |
| 1921 486. . . | 21-14-5 |
| 1921 487. . . | 21-14-1 |
| 1921 490. . . | 21-15-2 |
| 1921 491. . . | 21-24-2 |
| 1921 492. . . | 21-15-33 |
| 1921 493. . . | 21-15-33 |
| 1921 494. . . | 21-24-19 |
| 1921 495. . . | 21-25-2 |
| 1921 496. . . | 21-25-4 |
| 1921 497. . . | 21-25-6 |
| 1921 499. . . | 21-14-19 |
| 1921 500. . . | 21-10-4 |
| 1921 501. . . | 21-11-1 |
| 1921 503. . . | 21-11-2 |
| 1921 504. . . | 21-12-1 |
| 1921 506. . . | 21-29-3 |
| 1921 507. . . | 21-29-25 |
| 1921 508. . . | 21-42-11 |
| 1921 513. . . | 21-42-31 |
| 1921 516. . . | 21-39-3 |
| 1921 517. . . | 21-39-3 |
| 1921 518. . . | 21-34-45 |
| 1921 519. . . | 21-34-45 |
| 1921 520. . . | 21-34-45 |
| 1921 521. . . | 21-34-45 |
| 1921 522. . . | 21-34-42 |
| 1921 523. . . | 21-34-47 |
| 1923 508. . . | 21-42-11 |
| 1923 509. . . | 21-17-9 |
| 1925 096. . . | 1-48-854 |
| 1930 225. . . | 8-50-186 |
| 1937 773. . . | 5-27-10 |
| 1938 292. . . | 23-67-76 |
| 1940 020. . . | 13-66-3 |
| 1940 021. . . | 13-66-3 |
| 1940 147. . . | 6-38-23 |
| | 19-54-131 |
| 1940 161. . . | 5-31-15 |
| 1940 162. . . | 5-31-15 |
| 1940 166. . . . | 5-27-1 |
| 1940 173. . . . | 5-27-1 |
| 1940 175. . . . | 6-50-1 |
| 1940 182. . . . | 6-52-1 |
| 1940 184. . . . | 6-52-1 |
| 1940 194. . | 5-100-105 |
| 1940 195. . . . | 5-42-1 |
| 1940 202. . . . | 5-28-8 |
| 1940 234. . . | 17-19-3 |
| 1940 238. . . | 17-19-3 |
| 1940 300. . . . | 9-69-6 |
| 1940 301. . . . | 9-69-6 |
| 1940 304. . . . | 9-69-4 |
| 1940 369. . . | 13-64-3 |
| 1940 371. . . | 13-64-23 |
| 1940 372. . . | 13-64-3 |
| 1940 373. . . | 13-64-3 |
| 1940 374. . . | 13-64-17 |
| 1940 375. . . | 13-64-17 |
| 1940 376. . . | 13-66-16 |
| 1940 377. . . | 13-66-16 |
| 1940 378. . . | 13-66-9 |
| 1940 379. . . | 13-66-3 |
| 1940 380. . . | 13-66-3 |
| 1940 384. . . | 13-64-3 |
| 1940 385. . . | 13-64-3 |
| 1940 386. . . | 13-64-3 |
| 1940 387. . . | 13-66-3 |
| 1940 388. . . . | 3-66-3 |
| 1940 389. . . | 13-66-3 |
| 1940 390. . . | 13-64-3 |
| 1940 391. . . | 13-64-3 |
| 1940 392. . . | 13-66-3 |
| 1940 393. . . | 13-66-3 |
| 1940 395. . . | 13-66-10 |
| 1940 397. . . | 8-47-21 |
| 1940 402. . . | 13-68-18 |
| 1940 408. . . | 13-66-3 |
| 1940 409. . . | 13-66-3 |
| 1940 410. . . | 13-66-3 |
| 1940 411. . . | 13-66-3 |
| 1940 412. . . | 13-66-3 |
| 1940 413. . . | 13-66-3 |
| 1940 420. . . | 12-04-4 |
| 1940 421. . . | 12-04-4 |
| 1940 512. . . . | 8-33-5 |
| 1940 596. . . | 3-03-31 |
| 1940 604. . . . | 3-32-8 |
| 1940 622. . . . | 5-58-1 |
| 1940 623. . . . | 3-09-2 |
| 1940 624. . . . | 3-09-2 |
| 1940 787. . . | 5-100-3 |
| 1940 788. . . | 5-100-1 |
| 1940 790. . . | 5-100-39 |
| 1940 813. . . | 22-09-1 |
| 1940 814. . . | 22-09-1 |
| 1940 815. . . | 22-09-1 |
| 1940 816. . . | 22-09-1 |
| 1940 817. . . | 22-09-1 |
| 1940 818. . . | 22-09-1 |
| 1940 830. . . | 22-01-42 |
| 1940 831. . . | 22-01-42 |
| 1940 857. . . . | 8-33-6 |
| 1940 859. . . | 12-04-25 |
| 1940 860. . . | 1-88-51 |
| 1940 889. . . | 12-04-23 |
| 1940 892. . . | 12-04-4 |
| 1940 894. . . | 12-07-1 |
| 1940 895. . . | 12-07-1 |
| 1940 904. . . | 12-04-4 |
| 1940 905. . . | 12-04-4 |
| 1940 920. . . | 13-11-5 |
| 1940 961. . . | 13-11-5 |
| 1940 990. . . | 13-68-6 |
| 1940 991. . . | 13-68-6 |
| 1940 992. . . | 13-68-18 |
| 1940 994. . . | 13-68-6 |
| 1940 995. . . | 13-68-6 |
| 1941 007. . . | 8-47-21 |
| 1941 002. . . | 13-68-6 |
| 1941 005. . . | 13-66-3 |
| 1941 022. . . | 13-66-3 |
| 1941 031. . . | 13-66-16 |
| 1941 032. . . | 13-66-16 |
| 1941 033. . . | 13-66-16 |
| 1941 034. . . | 13-66-16 |
| 1941 600. | 21-139-105 |
| 1941 601. | 21-139-105 |
| 1941 602. | 21-139-105 |
| 1941 603. | 21-139-105 |
| 1941 604. | 21-139-210 |
| 1941 605. | 21-139-147 |
| 1941 606. | 21-139-140 |
| 1941 622. . | 21-139-30 |
| 1941 623. . | 21-139-78 |
| 1941 624. . | 21-139-78 |
| 1941 625. . . | 21-139-9 |
| 1941 626. . | 21-139-50 |
| 1941 628. . . | 21-03-1 |
| 1941 634. . | 21-119-15 |
| 1941 632. . | 21-119-15 |
| 1941 636. . | 21-30-392 |
| 1941 688. . | 21-139-12 |
| 1941 693. . | 21-131-15 |
| 1941 698. . . | 21-42-23 |
| 1941 699. . . | 21-42-43 |
| 1941 730. . | 21-119-15 |
| 1941 731. . | 21-119-15 |
| 1941 779. . | 21-131-45 |
| 1941 831. . . | 21-129-7 |
| | 21-137-202 |
| 1941 887. . . | 21-04-11 |
| 1942 107. . | 21-118-53 |
| 1942 109. . | 21-138-38 |



MyMopar.com

| PART NUMBER | CODE |
|---|---|
| 1942 132. . | 21-136-23 |
| 1942 140. . | 21-136-47 |
| 1942 152. . | 21-137-47 |
| 1942 153. . | 21-137-200 |
| 1942 156. . | 21-137-205 |
| 1942 167. . . | 21-84-7 |
| 1942 174. . . | 21-85-61 |
| 1942 187. . | 21-136-236 |
| 1942 211. . . | 21-139-9 |
| 1942 213. . | 21-139-64 |
| 1942 216. . | 21-139-67 |
| 1942 218. . | 21-139-63 |
| 1942 222. . | 21-139-71 |
| 1942 223. . | 21-139-12 |
| 1942 225. . | 21-139-24 |
| 1942 226. . | 21-139-135 |
| 1942 227. . | 21-139-135 |
| 1942 228. . | 21-139-135 |
| 1942 229. . | 21-139-108 |
| 1942 230. . | 21-139-135 |
| 1942 231. . | 21-139-108 |
| 1942 233. . | 21-139-144 |
| 1942 235. . | 21-139-140 |
| 1942 236. . | 21-139-147 |
| 1942 237. . | 21-139-154 |
| 1942 242. . . | 21-139-4 |
| 1942 245. . | 21-139-63 |
| 1942 259. . . | 21-84-28 |
| 1942 303. . | 21-118-42 |
| 1942 381. . | 21-118-40 |
| 1942 383. . . | 21-129-5 |
| 1942 384. . | 21-118-45 |
| 1942 389. . | 21-129-13 |
| 1942 390. . | 21-129-24 |
| 1942 392. . . | 21-133-7 |
| 1942 395. . | 21-133-15 |
| 1942 396. . | 21-133-17 |
| 1942 397. . | 21-133-17 |
| 1942 399. . | 21-133-22 |
| 1942 400. . | 21-133-43 |
| 1942 401. . . | 21-05-12 |
| 1942 402. . | 21-133-39 |
| 1942 403. . | 21-133-38 |
| 1942 404. . | 21-133-36 |
| 1942 411. . | 21-133-15 |
| 1942 412. . | 21-133-17 |
| 1942 414. . | 21-133-20 |
| 1942 415. . | 21-133-25 |
| 1942 418. . | 21-133-36 |
| 1942 419. . | 21-129-10 |
| 1942 421. . | 21-133-43 |
| 1942 422. . | 21-133-43 |
| 1942 423. . | 21-133-43 |
| 1942 426. . . | 21-05-19 |
| | 21-129-7 |
| 1942 427. . . | 21-134-5 |
| 1942 433. . . | 21-134-5 |
| 1942 434. . | 21-133-40 |
| 1942 438. . | 21-133-42 |
| 1942 439. . | 21-133-46 |
| 1942 441. . | 21-133-48 |
| | 21-136-237 |
| 1942 443. . | 21-134-38 |
| 1942 444. . | 21-134-40 |
| 1942 446. . | 21-134-36 |
| 1942 447. . | 21-134-45 |
| 1942 448. . | 21-134-40 |
| 1942 450. . | 21-134-36 |
| 1942 451. . | 21-136-65 |
| 1942 452. . | 21-136-68 |
| 1942 454. . . | 21-05-35 |
| 1942 455. . . | 21-05-35 |
| 1942 456. . . | 21-05-35 |
| 1942 457. . . | 21-03-1 |
| 1942 458. . | 21-137-53 |
| 1942 461. . | 21-136-232 |
| 1942 463. . | 21-118-40 |
| 1942 467. . | 21-133-20 |
| 1942 471. . . | 21-138-7 |
| 1942 477. . | 21-136-17 |
| 1942 478. . . | 21-137-5 |
| 1942 481. . | 21-137-22 |
| 1942 482. . | 21-137-11 |
| 1942 485. . | 21-137-13 |
| 1942 486. . | 21-137-19 |
| 1942 487. . | 21-136-30 |
| 1942 491. . | 21-136-47 |
| 1942 493. . | 21-136-49 |
| 1942 494. . | 21-136-44 |
| 1942 496. . | 21-136-41 |
| 1942 497. . | 21-136-41 |
| 1942 498. . | 21-137-35 |
| 1942 499. . | 21-137-50 |
| 1942 501. . | 21-137-56 |
| 1942 502. . | 21-137-59 |
| 1942 514. . . | 21-119-3 |
| 1942 516. . . | 21-119-5 |
| 1942 517. . . | 21-85-5 |
| 1942 521. . . | 21-85-5 |
| 1942 523. . . | 21-85-5 |
| 1942 527. . . | 21-04-1 |
| 1942 542. . . | 21-05-1 |
| 1942 543. . | 21-136-52 |
| 1943 547. . . | 8-47-21 |
| 1943 554. . . | 13-64-13 |
| | 13-66-20 |
| 1943 559. . . . | 8-47-8 |
| 1943 626. . . . | 8-33-4 |
| 1943 666. . . . | 5-16-1 |
| 1943 667. . . . | 5-16-1 |
| 1943 674. . . . | 5-03-6 |
| 1943 686. . . . | 5-16-1 |
| 1943 687. . . . | 5-16-1 |
| 1943 690. . . . | 5-69-1 |
| 1943 691. . . . | 5-13-9 |
| 1943 742. . . | 22-01-42 |
| 1943 743. . . | 22-08-5 |
| 1943 796. . . . | 5-13-1 |
| 1943 797. . . . | 5-13-1 |
| 1943 798. . . . | 5-13-1 |
| 1943 799. . . . | 5-13-1 |
| 1943 804. . . . | 5-03-5 |
| 1943 805. . . . | 5-03-6 |
| 1943 806. . . . | 5-03-6 |
| 1943 813. . . . | 5-13-1 |
| 1943 814. . . . | 5-03-5 |
| 1943 828. . . | 4-23-50 |
| 1943 832. . . . | 5-13-1 |
| 1943 833. . . | 4-23-51 |
| 1943 838. . . . | 5-13-1 |
| 1943 839. . . . | 5-13-1 |
| 1943 840. . . . | 5-64-2 |
| 1943 901. . . | 11-05-1 |
| 1943 997. . . | 17-19-6 |
| 1943 999. . . | 17-15-6 |
| 1944 004. . . | 19-57-3 |
| 1944 011. . . | 19-14-16 |
| | 19-15-15 |
| 1944 089. . . | 5-105-1 |
| 1944 092. . . | 5-110-18 |
| 1944 171. . . | 14-88-27 |
| 1944 174. . . | 14-88-21 |
| 1944 177. . . | 14-88-21 |
| 1944 194. . . | 14-88-21 |
| 1944 200. . . | 14-86-1 |
| 1944 203. . . | 14-88-21 |
| 1944 204. . . | 14-86-40 |
| 1944 206. . . | 14-86-40 |
| 1944 208. . . | 14-86-40 |
| 1944 242. . . . | 4-01-1 |
| 1944 257. . . | 5-03-23 |
| 1944 258. . . | 5-03-23 |
| 1944 361. . . | 17-14-10 |
| 1944 369. . . | 13-01-1 |
| 1944 399. . . | 13-64-4 |
| 1944 407. . . | 13-18-4 |
| 1944 616. . . | 9-58-12 |
| 1944 652. . . | 10-03-7 |
| 1944 694. . . | 10-24-4 |
| 1944 712. . . . | 9-15-1 |
| 1944 773. . . . | 9-23-5 |
| 1944 792. . | 19-54-246 |
| 1944 844. . . | 8-28-282 |
| 1944 845. . . | 8-28-283 |
| 1944 847. . . | 8-28-288 |
| 1944 850. . . | 8-28-36 |
| 1944 854. . . | 9-39-15 |
| 1944 865. . . . | 9-31-5 |
| 1944 866. . . . | 9-31-4 |
| 1944 869. . . | 8-28-15 |
| 1944 881. . . . | 7-03-1 |
| 1944 916. . . . | 7-43-1 |
| 1945 163. . . | 14-11-18 |
| 1945 173. . . | 9-23-17 |
| 1945 190. . . | 10-02-15 |
| 1945 191. . . | 10-02-15 |
| 1945 197. . . | 14-07-5 |
| | 14-13-5 |
| 1945 277. . . | 8-28-51 |
| 1945 291. . . . | 9-41-4 |
| 1945 292. . . . | 9-41-4 |
| 1945 318. . . . | 9-39-5 |
| 1945 319. . . . | 9-39-5 |
| 1945 320. . . . | 9-39-5 |
| 1945 321. . . . | 9-39-5 |
| 1945 384. . . | 8-28-283 |
| | 19-54-115 |
| 1945 398. . . | 8-28-36 |
| 1945 399. . . | 8-28-36 |
| 1945 402. . . | 8-28-36 |
| 1945 403. . . | 8-28-36 |
| 1945 404. . . | 9-23-10 |
| 1945 543. . . | 14-29-2 |
| 1945 506. . . | 9-03-28 |
| 1945 561. . . | 11-02-4 |
| 1945 709. . . | 14-29-4 |
| 1945 749. . . . | 3-04-6 |
| 1945 751. . . | 3-04-10 |
| 1945 768. . . . | 3-20-1 |
| 1945 777. . . | 19-14-1 |
| 1945 782. . . | 19-14-1 |
| 1945 808. . . | 19-01-60 |
| 1945 831. . . | 16-17-1 |
| 1945 836. . . | 16-16-47 |
| 1945 839. . . | 16-20-1 |
| 1945 841. . . | 16-02-2 |
| 1945 856. . | 21-30-365 |
| 1945 861. . | 21-30-336 |
| 1945 864. . | 21-30-336 |
| 1945 867. . | 21-30-336 |
| 1945 870. . | 21-30-336 |
| 1945 872. . | 21-30-336 |
| 1945 873. . | 21-30-336 |
| 1945 875. . | 21-30-336 |
| 1945 894. . . | 19-02-5 |
| 1945 904. . . | 19-30-4 |
| 1945 906. . . | 19-30-4 |
| 1945 919. . . . | 8-33-4 |
| 1945 920. . . . | 8-33-4 |
| 1945 922. . . . | 8-33-6 |
| 1945 923. . . . | 8-33-6 |
| 1945 924. . . . | 8-33-6 |
| 1945 934. . . | 13-64-4 |
| 1945 935. . . | 13-64-4 |
| 1945 936. . . | 13-64-4 |
| 1945 937. . . | 13-64-4 |
| 1945 938. . . | 13-64-4 |
| 1945 939. . . | 13-64-4 |
| 1945 945. . . | 13-66-15 |
| 1945 948. . . | 13-66-16 |
| 1945 949. . . | 13-66-16 |
| 1945 950. . . | 13-66-16 |
| 1945 951. . . | 13-66-16 |
| 1945 952. . . | 13-66-16 |
| 1934 953. . . | 13-66-16 |
| 1945 954. . . | 13-64-4 |
| 1945 955. . . | 13-64-4 |
| 1945 956. . . | 13-64-4 |
| 1945 957. . . | 13-64-4 |
| 1945 960. . . | 13-68-6 |
| 1945 961. . . | 13-68-6 |
| 1945 964. . . | 13-68-18 |
| 1945 966. . . | 13-64-6 |
| | 13-66-20 |
| 1945 968. . . | 13-64-3 |
| 1945 969. . . | 13-64-3 |
| 1945 976. . . | 13-66-64 |
| 1945 977. . . | 13-66-64 |
| 1946 141. . . . | 9-70-9 |
| 1946 189. . | 21-30-336 |
| 1946 194. . | 21-30-336 |
| 1946 197. . | 21-30-336 |
| 1946 200. . | 21-30-336 |
| 1946 203. . | 21-30-336 |
| 1946 206. . | 21-30-336 |
| 1946 208. . | 21-30-336 |
| 1946 210. . | 21-30-336 |
| 1946 283. . . | 16-02-5 |
| 1946 297. . . | 16-02-4 |
| 1946 342. . | 21-30-320 |
| 1946 353. . . . | 6-35-6 |
| 1946 357. . . . | 5-28-8 |
| 1946 360. . . | 6-35-19 |
| 1946 362. . . . | 9-71-5 |
| 1946 377. . . . | 6-38-3 |
| 1946 393. . . . | 6-52-1 |
| 1946 400. . . . | 4-25-1 |
| 1946 401. . . . | 4-25-6 |
| 1946 413. . . . | 4-23-1 |
| 1946 415. . . . | 4-23-4 |
| 1946 416. . . . | 4-23-6 |
| 1946 418. . . . | 4-23-1 |
| 1946 422. . . . | 4-25-1 |
| 1946 434. . . . | 4-25-6 |
| 1946 445. . . . | 4-29-1 |
| 1946 447. . . . | 4-25-3 |
| 1946 450. . . . | 4-23-1 |
| 1946 466. . . . | 4-01-1 |
| 1946 468. . . . | 4-23-3 |
| 1946 502. . | 21-30-336 |
| 1946 505. . | 21-30-336 |
| 1946 508. . | 21-30-336 |
| 1946 511. . | 21-30-336 |
| 1946 514. . | 21-30-336 |
| 1946 545. . | 21-30-365 |
| 1946 547. . | 21-30-320 |
| 1946 552. . . . | 8-33-4 |
| 1946 555. . . | 8-33-19 |



MyMopar.com

| PART NUMBER | CODE |
|---|---|
| 1946 556. . . | 8-33-5 |
| 1946 562. . . | 19-30-4 |
| 1946 568. . . | 19-30-4 |
| 1946 578. . . | 19-46-23 |
| 1946 589. . . | 21-30-22 |
| 1946 637. . . | 11-05-12 |
| 1946 639. . . | 11-05-12 |
| 1946 648. . . | 11-06-3 |
| 1946 918. . . | 8-28-51 |
| 1946 922. . . | 7-03-1 |
| 1946 923. . . | 14-29-6 |
| 1946 955. . . | 19-54-121 |
| 1946 960. . . | 10-22-40 |
| 1946 969. . . | 9-48-6 |
| 1946 992. . . | 9-15-6 |
| 1947 016. . . | 9-15-1 |
| 1947 018. . . | 9-48-6 |
| 1947 022. . . | 7-03-1 |
| 1947 132. . . | 7-03-1 |
| 1947 162. . . | 9-48-7 |
| 1947 164. . . | 9-48-7 |
| 1947 173. . . | 9-48-6 |
| 1947 221. . . | 10-07-6 |
| 1947 225. . . | 10-10-1 |
| 1947 235. . . | 9-13-5 |
| 1947 236. . . | 9-23-40 |
| 1947 301. . . | 14-11-23 |
| 1947 311. . . | 14-01-16 |
| 1947 354. . . | 9-03-5 |
| 1947 359. . . | 14-39-45 |
| 1947 364. . . | 14-29-2 |
| 1947 376. . . | 14-11-14 |
| 1947 402. . . | 9-48-151 |
| 1947 403. . . | 9-48-152 |
| 1947 415. . . | 14-01-22 |
| 1947 428. . . | 9-50-16 |
| 1947 429. . . | 11-06-8 |
| 1947 430. . . | 9-48-124 |
| 1947 432. . . | 9-48-6 |
| 1947 488. . . | 9-48-6 |
| 1947 503. . . | 9-43-1 |
| 1947 504. . . | 9-43-1 |
| 1947 521. . . | 7-44-3 |
| 1947 523. . . | 7-44-4 |
| 1947 541. . . | 9-48-7 |
| 1947 542. . . | 14-14-47 |
| 1947 544. . . | 14-14-48 |
| 1947 551. . . | 9-23-5 |
| 1947 554. . . | 9-23-17 |
| 1947 557. . . | 9-11-7 |
| 1947 560. . . | 9-17-5 |
| 1947 561. . . | 9-45-1 |
| 1947 578. . . | 9-03-5 |
| 1947 581. . . | 9-23-18 |
| 1947 584. . . | 19-54-115 |
| 1947 585. . . | 19-54-115 |
| 1947 594. . . | 9-43-1 |
| 1947 612. . . | 8-27-26 |
| 1947 614. . . | 9-43-9 |
| 1947 616. . . | 9-43-11 |
| 1947 617. . . | 9-43-11 |
| 1947 623. . . | 9-39-5 |
| 1947 624. . . | 9-39-6 |
| 1947 626. . . | 14-06-10 |
| 1947 643. . . | 7-48-22 |
| 1947 657. . . | 24-25-10 |
| 1947 671. . . | 9-05-6 |
| 1947 687. . . | 9-03-10 |
| 1947 707. . . | 7-45-31 |
| 1947 708. . . | 8-36-137 |
| 1947 710. . . | 19-54-2 |
| 1947 721. . . | 7-06-14 |
| 1947 726. . . | 14-29-2 |
| 1947 729. . . | 14-39-48 |
| 1947 730. . . | 14-39-49 |
| 1947 731. . . | 14-39-46 |
| 1947 732. . . | 9-48-124 |
| 1947 735. . . | 8-28-15 |
| 1947 756. . . | 7-04-10 |
| 1947 765. . . | 14-39-45 |
| 1947 776. . . | 19-54-86 |
| 1947 779. . . | 19-54-246 |
| 1947 786. . . | 9-16-17 |
| 1947 789. . . | 24-25-15 |
| 1947 797. . . | 14-29-5 |
| 1947 798. . . | 14-29-15 |
| 1947 809. . . | 14-30-1 |
| 1947 810. . . | 14-30-2 |
| 1947 811. . . | 14-39-45 |
| 1947 841. . . | 14-30-1 |
| 1947 842. . . | 14-39-45 |
| 1947 861. . . | 14-11-9 |
| 1947 897. . . | 9-13-5 |
| 1947 907. . . | 7-02-1 |
| 1947 916. . . | 8-28-15 |
| 1947 950. . . | 9-31-4 |
| 1947 953. . . | 10-24-23 |
| 1948 005. . . | 11-08-24 |
| 1948 015. . . | 13-66-24 |
| 1948 022. . . | 13-64-4 |
| 1948 023. . . | 13-64-4 |
| 1948 024. . . | 13-64-149 |
| 1948 025. . . | 13-64-149 |
| 1948 032. . . | 13-66-147 |
| 1948 038. . . | 13-66-16 |
| 1948 039. . . | 13-66-16 |
| 1948 040. . . | 13-64-72 |
| 1948 041. . . | 13-64-72 |
| 1948 042. . . | 13-64-149 |
| 1948 043. . . | 13-64-149 |
| 1948 045. . . | 13-66-24 |
| 1948 047. . . | 13-68-6 |
| 1948 048. . . | 13-68-18 |
| 1948 062. . . | 13-64-149 |
| 1948 063. . . | 13-64-149 |
| 1948 067. . . | 13-64-3 |
| 1948 070. . . | 13-66-16 |
| 1948 071. . . | 13-66-16 |
| 1948 076. . . | 13-66-25 |
| 1948 077. . . | 13-66-26 |
| 1948 081. . . | 13-64-3 |
| 1948 083. . . | 13-66-3 |
| 1948 093. . . | 8-47-8 |
| 1948 095. . . | 13-66-147 |
| 1948 099. . . | 13-64-4 |
| 1948 100. . . | 13-64-8 |
| 1948 106. . . | 13-66-135 |
| 1948 107. . . | 13-66-135 |
| 1948 108. . . | 13-64-149 |
| 1948 112. . . | 22-03-1 |
| 1948 113. . . | 22-03-1 |
| 1948 116. . . | 22-05-14 |
| 1948 117. . . | 22-05-14 |
| 1948 163. . . | 22-08-5 |
| 1948 164. . . | 11-05-1 |
| 1948 166. . . | 11-05-1 |
| 1948 170. . . | 11-05-4 |
| 1948 171. . . | 11-05-4 |
| 1948 172. . . | 11-05-4 |
| 1948 173. . . | 11-05-4 |
| 1948 174. . . | 11-05-1 |
| 1948 176. . . | 11-05-1 |
| 1948 264. . . | 11-01-1 |
| 1948 265. . . | 11-01-1 |
| 1948 266. . . | 11-09-3 |
| 1948 267. . . | 11-09-3 |
| 1948 283. . . | 11-09-3 |
| 1948 284. . . | 11-09-3 |
| 1948 309. . . | 11-01-1 |
| 1948 338. . . | 17-19-3 |
| 1948 342. . . | 17-19-3 |
| 1948 345. . . | 17-19-3 |
| 1948 350. . . | 17-23-57 |
| 1948 351. . . | 17-19-20 |
| 1948 354. . . | 13-54-15 |
| 1948 359. . . | 13-54-4 |
| 1948 377. . . | 13-54-15 |
| 1948 402. . . | 12-04-33 |
| 1948 403. . . | 12-04-33 |
| 1948 408. . . | 12-04-33 |
| 1948 409. . . | 12-04-33 |
| 1948 414. . . | 12-07-1 |
| 1948 415. . . | 12-07-1 |
| 1948 434. . . | 12-04-22 |
| 1948 435. . . | 12-04-22 |
| 1948 440. . . | 12-04-4 |
| 1948 441. . . | 12-04-4 |
| 1948 535. . . | 11-09-3 |
| 1948 536. . . | 11-09-3 |
| 1948 538. . . | 11-09-3 |
| 1948 539. . . | 11-09-3 |
| 1948 549. . . | 11-02-4 |
| 1948 552. . . | 11-05-1 |
| 1948 554. . . | 11-05-1 |
| 1948 564. . . | 11-05-4 |
| 1948 565. . . | 11-05-4 |
| 1948 568. . . | 11-05-4 |
| 1948 569. . . | 11-05-4 |
| 1948 588. . . | 11-09-3 |
| 1948 589. . . | 11-09-3 |
| 1948 590. . . | 11-09-3 |
| 1948 591. . . | 11-09-3 |
| 1948 592. . . | 11-09-3 |
| 1948 593. . . | 11-09-3 |
| 1948 658. . . | 8-33-6 |
| 1948 659. . . | 8-33-4 |
| 1948 662. . . | 19-57-3 |
| 1948 665. . . | 19-30-4 |
| 1948 673. . . | 19-30-4 |
| 1948 674. . . | 8-33-5 |
| 1948 675. . . | 8-33-19 |
| 1948 679. . . | 19-01-8 |
| 1948 682. . . | 8-33-6 |
| 1948 685. . . | 8-33-4 |
| 1948 687. . . | 19-15-4 |
| 1948 688. . . | 19-15-4 |
| 1948 691. . . | 19-15-4 |
| 1948 692. . . | 19-15-4 |
| 1948 693. . . | 19-15-4 |
| 1948 695. . . | 19-01-8 |
| 1948 696. . . | 19-01-8 |
| 1948 697. . . | 19-01-8 |
| 1948 709. . . | 19-15-3 |
| 1948 734. . . | 14-86-40 |
| 1948 741. . . | 14-86-55 |
| 1948 749. . . | 14-86-35 |
| 1948 754. . . | 1-39-2 |
| 1948 757. . . | 14-72-9 |
| 1948 780. . . | 21-30-336 |
| 1948 781. . . | 21-30-336 |
| 1948 782. . . | 21-30-336 |
| 1948 783. . . | 21-30-336 |
| 1948 784. . . | 21-30-336 |
| 1948 785. . . | 19-48-1 |
| 1948 786. . . | 19-48-1 |
| 1948 815. . . | 5-102-2 |
| 1948 822. . . | 5-102-2 |
| 1948 827. . . | 5-102-2 |
| 1948 838. . . | 5-110-18 |
| 1948 840. . . | 19-30-4 |
| 1948 841. . . | 19-30-4 |
| 1948 842. . . | 19-30-4 |
| 1948 843. . . | 19-30-4 |
| 1948 844. . . | 19-30-4 |
| 1948 845. . . | 19-30-4 |
| 1948 846. . . | 19-30-4 |
| 1948 848. . . | 19-30-4 |
| 1948 849. . . | 19-30-4 |
| 1948 850. . . | 19-30-4 |
| 1948 851. . . | 19-30-4 |
| 1948 862. . . | 19-14-1 |
| 1948 867. . . | 13-54-4 |
| 1948 878. . . | 13-54-15 |
| 1948 880. . . | 13-54-15 |
| 1948 884. . . | 17-23-56 |
| 1948 950. . . | 13-64-4 |
| 1948 951. . . | 13-64-4 |
| 1948 954. . . | 13-66-3 |
| 1948 955. . . | 13-66-3 |
| 1948 958. . . | 13-68-6 |
| 1948 959. . . | 13-68-6 |
| 1948 960. . . | 13-66-3 |
| 1948 961. . . | 13-64-3 |
| 1948 967. . . | 13-66-27 |
| 1948 969. . . | 13-64-13 |
| 1948 970. . . | 13-64-10 |
| 1948 972. . . | 13-66-23 |
| 1948 974. . . | 13-64-141 |
| 1948 975. . . | 13-64-141 |
| 1948 987. . . | 8-47-22 |
| 1948 988. . . | 8-47-21 |
| 1948 994. . . | 13-64-4 |
| 1949 159. . . | 21-42-23 |
| 1949 176. . . | 9-46-33 |
| 1949 185. . . | 21-04-1 |
| 1949 186. . . | 21-05-1 |
| 1949 192. . . | 21-04-1 |
| 1949 196. . . | 21-133-36 |
| 1949 197. . . | 21-133-36 |
| 1949 198. . . | 21-133-36 |
| 1949 319. . . | 16-20-1 |
| 1949 345. . . | 21-29-3 |
| 1949 346. . . | 21-29-25 |
| 1949 347. . . | 21-42-11 |
| 1949 350. . . | 21-42-31 |
| 1949 351. . . | 21-39-3 |
| 1949 352. . . | 21-42-11 |
| 1949 354. . . | 21-39-3 |
| 1949 355. . . | 21-34-45 |
| 1949 356. . . | 21-34-42 |
| 1949 361. . . | 21-04-2 |
| 1949 362. . . | 21-09-2 |
| 1949 363. . . | 21-09-29 |
| 1949 381. . . | 21-133-34 |
| 1949 383. . . | 21-119-19 |
| 1949 388. . . | 21-02-1 |
| 1949 389. . . | 21-02-1 |
| 1949 401. . . | 21-85-5 |
| 1949 402. . . | 21-85-5 |
| 1949 403. . . | 21-85-5 |
| 1949 404. . . | 21-85-5 |
| 1949 405. . . | 21-85-5 |
| 1949 418. . . | 21-139-5 |
| 1949 424. . . | 9-46-21 |
| 1949 467. . . | 21-42-11 |
| 1949 471. . . | 21-42-11 |
| 1949 516. . . | 21-139-213 |



MyMopar.com

| PART NUMBER | CODE |
|---|---|
| 1949 523. . | 21-139-76 |
| 1949 542. . | 21-119-15 |
| 1949 545. . | 21-119-19 |
| 1949 556. . . | 21-04-2 |
| 1949 565. . | 21-139-48 |
| 1949 583. . | 21-119-15 |
| 1949 600. . . | 21-118-8 |
| 1949 601. . | 21-118-37 |
| 1949 652. . | 21-139-50 |
| 1949 655. . | 21-136-20 |
| 1949 671. . . . | 4-01-1 |
| 1949 673. . | 21-131-15 |
| 1949 676. . . | 21-134-5 |
| | 21-135-50 |
| 1949 701. . . | 21-03-28 |
| 1949 760. . | 21-139-74 |
| 1949 762. . | 21-139-76 |
| 1949 763. . . . | 9-46-8 |
| 1949 765. . . | 9-46-21 |
| 1949 767. . . | 21-03-6 |
| 1949 776. . | 21-138-10 |
| 1949 808. . . | 21-02-1 |
| 1949 834. . . | 21-17-2 |
| 1949 837. | 21-137-205 |
| 1949 843. . . | 21-15-2 |
| 1949 845. . . | 9-46-43 |
| 1949 846. . . | 9-46-44 |
| 1949 847. . | 21-139-33 |
| 1949 858. . | 21-138-15 |
| 1949 859. . | 21-138-15 |
| 1949 902. . . | 21-02-1 |
| 1949 904. . . | 21-02-1 |
| 1949 905. . . | 21-02-1 |
| 1949 906. . . | 21-02-1 |
| 1949 907. . . | 21-02-1 |
| 1949 910. . . | 21-03-1 |
| 1949 930. . | 21-133-39 |
| 1949 933. . . | 21-09-30 |
| 1949 957. . . | 21-09-29 |
| 1949 964. . . | 21-117-1 |
| 1949 967. . . | 21-16-3 |
| 1949 968. . . | 21-09-2 |
| 1949 969. . . | 21-04-1 |
| 1950 255. . | 23-64-308 |
| 1950 256. . | 23-64-308 |
| 1950 276. . | 23-34-236 |
| 1950 277. . | 23-34-236 |
| 1950 292. . | 23-64-242 |
| 1950 293. . | 23-64-242 |
| 1950 356. . | 23-64-240 |
| 1950 357. . | 23-64-240 |
| 1950 478. . | 23-63-127 |
| 1950 479. . | 23-63-127 |
| 1950 486. . | 23-58-497 |
| 1950 500. . . | 23-58-76 |
| 1950 501. . . | 23-58-76 |
| 1950 502. . . | 23-58-76 |
| 1950 503. . . | 23-58-76 |
| 1950 518. . . | 23-19-82 |
| 1950 519. . . | 23-19-82 |
| 1950 559. . . | 23-15-17 |
| 1950 560. . . | 23-09-9 |
| 1950 561. . . | 23-09-9 |
| 1950 582. . . | 23-09-58 |
| 1950 583. . . | 23-09-58 |
| 1950 584. . . | 23-51-41 |
| 1950 592. . | 23-63-126 |
| 1950 593. . | 23-63-126 |
| 1950 594. . | 23-63-126 |
| 1950 595. . | 23-63-126 |
| 1950 604. . . | 23-15-1 |
| 1950 605. . . | 23-15-1 |
| 1950 610. . . | 23-15-1 |
| 1950 611. . . | 23-15-1 |
| 1950 648. . . | 23-09-58 |
| 1950 649. . . | 23-09-58 |
| 1950 668. . | 23-64-311 |
| 1950 669. . | 23-64-311 |
| 1950 670. . . | 23-15-7 |
| 1950 683. . | 23-64-311 |
| 1950 684. . | 23-64-311 |
| 1950 812. . . | 23-09-51 |
| 1950 813. . . | 23-09-51 |
| 1950 830. . . | 23-64-41 |
| 1950 842. . | 23-58-569 |
| 1950 844. . | 23-58-572 |
| 1950 845. . | 23-58-572 |
| 1950 846. . | 23-58-572 |
| 1950 847. . | 23-58-572 |
| 1950 848. . | 23-58-572 |
| 1950 849. . | 23-58-572 |
| 1950 850. . | 23-58-572 |
| 1950 851. . | 23-58-572 |
| 1950 852. . | 23-58-390 |
| 1950 853. . | 23-58-590 |
| 1950 854. . | 23-58-390 |
| 1950 855. . | 23-58-590 |
| 1950 897. . | 23-58-607 |
| 1952 195. . . | 23-58-75 |
| 1952 204. . . | 23-36-5 |
| 1952 205. . . | 23-36-5 |
| 1952 214. . . | 23-08-75 |
| | 23-36-22 |
| 1952 228. . | 23-19-178 |
| 1952 273. . . | 23-51-41 |
| 1952 312. . . | 23-58-3 |
| 1952 313. . . | 23-58-3 |
| 1952 315. . | 23-58-607 |
| 1952 328. . | 23-34-235 |
| 1952 332. . . | 23-36-53 |
| 1952 333. . . | 23-36-53 |
| 1952 348. . . | 23-64-48 |
| 1952 349. . . | 23-64-48 |
| 1952 378. . . | 23-42-26 |
| 1952 379. . . | 23-42-26 |
| 1952 466. . . | 23-23-33 |
| 1952 467. . . | 23-23-33 |
| 1952 482. . | 23-58-607 |
| 1952 508. . . | 23-11-1 |
| 1952 509. . . | 23-11-1 |
| 1952 510. . . | 23-11-3 |
| 1952 511. . . | 23-11-3 |
| 1952 514. . . | 23-11-3 |
| 1952 515. . . | 23-11-3 |
| 1952 516. . . | 23-11-1 |
| 1952 517. . . | 23-11-1 |
| 1952 557. . | 23-58-333 |
| 1952 559. . | 23-58-327 |
| 1952 584. . . | 23-41-95 |
| 1952 601. . . | 23-18-27 |
| 1952 602. . | 23-58-333 |
| 1952 603. . . | 23-18-37 |
| 1952 620. . | 23-64-299 |
| 1952 621. . | 23-64-299 |
| 1952 642. . | 23-34-301 |
| 1952 643. . | 23-64-314 |
| 1952 648. . . | 23-40-86 |
| 1952 649. . . | 23-40-86 |
| 1952 650. . . | 23-40-92 |
| 1952 651. . . | 23-40-92 |
| 1952 654. . . | 23-22-86 |
| 1952 655. . . | 23-22-86 |
| 1952 661. . | 23-63-112 |
| 1952 666. . | 23-34-301 |
| 1952 668. . | 23-64-314 |
| 1952 676. . . | 23-40-86 |
| 1952 677. . . | 23-40-86 |
| 1952 678. . . | 23-64-70 |
| 1952 679. . . | 23-64-70 |
| 1952 682. . . | 23-59-56 |
| 1952 683. . . | 23-59-56 |
| 1952 684. . | 23-34-302 |
| 1952 685. . | 23-34-302 |
| 1952 686. . . | 23-64-68 |
| 1952 687. . . | 23-64-68 |
| 1952 688. . | 23-63-112 |
| 1952 693. . . | 23-22-86 |
| 1952 696. . . | 23-22-86 |
| 1952 697. . . | 23-22-86 |
| 1952 698. . | 23-34-301 |
| 1952 699. . | 23-64-314 |
| 1952 704. . . | 23-40-92 |
| 1952 705. . . | 23-40-92 |
| 1952 706. . . | 23-40-86 |
| 1952 707. . . | 23-40-86 |
| 1952 717. . | 23-63-112 |
| 1952 725. . | 23-64-299 |
| 1952 730. . | 23-58-327 |
| 1952 731. . | 23-58-327 |
| 1952 762. . | 23-34-176 |
| 1952 763. . | 23-34-176 |
| 1952 778. . . | 23-18-40 |
| 1952 779. . | 23-58-607 |
| 1952 803. . . | 23-40-82 |
| 1952 818. . . | 23-14-18 |
| | 23-14-79 |
| 1952 819. . . | 23-14-18 |
| | 23-14-79 |
| 1952 826. . . | 23-63-14 |
| 1952 828. . . | 23-63-14 |
| | 23-63-15 |
| 1952 829. . . | 23-63-14 |
| | 23-63-15 |
| 1952 850. . . | 23-63-15 |
| 1952 852. . . | 23-63-33 |
| 1952 853. . . | 23-63-33 |
| 1952 856. . . | 23-23-33 |
| 1952 857. . . | 23-23-33 |
| 1952 874. . . | 23-51-5 |
| 1952 875. . . | 23-51-5 |
| 1952 876. . . | 23-64-66 |
| 1952 877. . . | 23-64-66 |
| 1952 878. . . | 23-64-66 |
| 1952 879. . . | 23-64-66 |
| 1952 880. . . | 23-26-41 |
| 1952 881. . . | 23-26-41 |
| 1952 882. . . | 23-51-5 |
| 1952 883. . . | 23-51-5 |
| 1952 884. . . | 23-51-5 |
| 1952 885. . . | 23-51-5 |
| 1952 896. . . | 23-26-41 |
| 1952 897. . . | 23-26-41 |
| 1952 912. . . | 23-51-5 |
| 1952 913. . . | 23-51-5 |
| 1952 916. . . | 23-51-5 |
| 1952 917. . . | 23-51-5 |
| 1952 919. . . | 23-51-5 |
| 1952 920. . . | 23-51-5 |
| 1952 921. . . | 23-51-5 |
| 1952 922. . . | 23-51-5 |
| 1952 923. . . | 23-51-5 |
| 1952 924. . . | 23-51-5 |
| 1952 925. . . | 23-51-5 |
| 1952 926. . . | 23-51-5 |
| 1952 927. . . | 23-51-5 |
| 1952 936. . | 23-58-607 |
| 1952 938. . | 23-58-200 |
| 1952 939. . | 23-58-208 |
| 1952 946. . . | 23-34-80 |
| 1952 947. . . | 23-34-80 |
| 1952 955. . . | 23-14-25 |
| 1952 960. . . | 23-51-5 |
| 1952 961. . . | 23-51-5 |
| 1952 962. . . | 23-51-5 |
| 1952 963. . . | 23-51-5 |
| 1952 972. . . | 23-22-53 |
| 1952 973. . . | 23-22-53 |
| 1952 976. . . | 23-22-53 |
| 1952 977. . . | 23-22-53 |
| 1952 983. . | 23-58-605 |
| 1952 984. . | 23-58-607 |
| 1952 994. . | 23-64-299 |
| 1952 995. . | 23-64-299 |
| 1954 020. . | 23-58-240 |
| 1954 048. . | 23-22-145 |
| 1954 056. . . | 23-18-5 |
| 1954 057. . . | 23-18-5 |
| 1954 058. . . | 23-18-5 |
| 1954 059. . . | 23-18-5 |
| 1954 074. . | 23-64-314 |
| 1954 083. . . | 23-64-4 |
| 1954 098. . | 23-34-179 |
| 1954 099. . | 23-34-179 |
| 1954 100. . | 23-64-306 |
| 1954 101. . | 23-64-306 |
| 1954 102. . | 23-64-306 |
| 1954 103. . | 23-64-306 |
| 1954 104. . | 23-64-306 |
| 1954 105. . | 23-64-306 |
| 1954 106. . | 23-64-306 |
| 1954 107. . | 23-64-306 |
| 1954 110. . . | 23-14-53 |
| 1954 111. . . | 23-14-53 |
| 1954 124. . . | 23-14-19 |
| 1954 128. . . | 23-14-24 |
| 1954 144. . . | 23-42-26 |
| 1954 145. . . | 23-42-26 |
| 1954 216. . | 23-66-135 |
| 1954 217. . | 23-64-314 |
| 1954 234. . . | 23-08-60 |
| 1954 235. . . | 23-08-60 |
| 1954 237. . | 23-64-314 |
| 1954 279. . . | 23-32-54 |
| 1954 280. . | 23-34-176 |
| 1954 281. . | 23-34-176 |
| 1954 286. . . | 23-20-19 |
| 1954 287. . . | 23-20-19 |
| 1954 288. . . | 23-20-19 |
| 1954 289. . . | 23-20-19 |
| 1954 316. . . | 23-20-19 |
| 1954 317. . . | 23-20-19 |
| 1954 342. . . | 23-39-18 |
| 1954 343. . . | 23-39-18 |
| 1954 346. . . | 23-39-5 |
| 1954 347. . . | 23-39-5 |
| 1954 348. . . | 23-39-5 |
| 1954 349. . . | 23-39-5 |
| 1954 370. . | 23-34-235 |
| 1954 371. . | 23-34-235 |
| 1954 393. . . | 23-08-12 |
| 1954 397. . . | 23-08-12 |
| 1954 401. . | 13-66-116 |
| 1954 418. . | 23-64-254 |
| 1954 446. . . | 23-09-47 |
| 1954 447. . . | 23-19-8 |
| 1954 496. . . | 23-64-70 |
| 1954 497. . . | 23-64-70 |
| 1954 540. . . | 23-14-79 |
| 1954 541. . . | 23-14-79 |
| 1954 544. . . | 23-63-94 |
| | 23-64-104 |
| 1954 545. . . | 23-63-94 |
| | 23-63-104 |



MyMopar.com

| PART NUMBER | CODE |
|---|---|
| 1954 568. . | .23-14-27 |
| 1954 569. . | .23-14-27 |
| 1954 570. . | .23-14-27 |
| 1954 571. . | .23-14-27 |
| 1954 572. . | 13-66-135 |
| 1954 573. . | 23-34-187 |
| 1954 604. . | .23-58-67 |
| 1954 618. . | .23-63-33 |
| 1954 619. . | .23-63-33 |
| 1954 631. . . | 8-11-13 |
| 1954 644. . | .23-26-41 |
| 1954 645. . | .23-26-41 |
| 1954 648. . | .23-20-65 |
| 1954 650. . | .23-20-65 |
| 1954 651. . | .23-20-65 |
| 1954 662. . | .23-23-22 |
| 1954 668. . | .23-64-66 |
| 1954 669. . | .23-64-66 |
| 1954 676. . | .23-36-53 |
| 1954 677. . | .23-36-53 |
| 1954 680. . | .23-63-14 |
| | 23-63-15 |
| 1954 681. . | .23-63-14 |
| | 23-63-15 |
| 1954 694. . | .23-63-15 |
| 1954 695. . | .23-63-15 |
| 1954 712. . | .23-63-21 |
| 1954 717. . | .23-08-54 |
| 1954 718. . | .23-63-33 |
| 1954 719. . | .23-63-33 |
| 1954 724. . | .23-63-21 |
| 1954 730. . | .23-23-41 |
| 1954 731. . | .23-23-41 |
| 1954 732. . | .23-23-41 |
| 1954 733. . | .23-23-41 |
| 1954 734. . | .23-23-41 |
| 1954 735. . | .23-23-41 |
| 1954 736. . | 23-34-120 |
| 1954 737. . | 23-34-120 |
| 1954 738. . | 23-34-120 |
| 1954 739. . | 23-34-120 |
| 1954 740. . | 23-34-120 |
| 1954 741. . | 23-34-120 |
| 1954 742. . | 23-34-120 |
| 1954 743. . | 23-34-120 |
| 1954 744. . | 23-34-120 |
| 1954 745. . | 23-34-120 |
| 1954 763. . | .23-19-63 |
| 1954 764. . | .23-19-63 |
| 1954 765. . | 23-58-603 |
| 1954 775. . | .23-63-15 |
| 1954 776. . | .23-63-15 |
| 1954 777. . | .23-63-15 |
| 1954 784. . | .23-23-41 |
| 1954 814. . | .23-36-53 |
| 1954 815. . | .23-36-53 |
| 1954 818. . | .23-18-26 |
| 1954 819. . | .23-18-26 |
| 1954 824. . | 23-58-475 |
| 1954 826. . | .23-63-33 |
| 1954 828. . | .23-63-33 |
| 1954 830. . | .23-18-26 |
| 1954 831. . | .23-18-26 |
| 1954 848. . | .23-22-85 |
| 1954 849. . | .23-22-85 |
| 1954 850. . | .23-23-41 |
| 1954 851. . | .23-18-29 |
| | 23-18-45 |
| 1954 862. . | .23-26-41 |
| 1954 863. . | .23-26-41 |
| 1954 864. . | .23-63-56 |
| 1954 865. . | .23-63-56 |
| 1954 866. . | .23-20-24 |
| 1954 867. . | .23-20-24 |
| 1954 886. . | .23-23-39 |
| 1954 887. . | .23-23-39 |
| 1954 909. . | .23-18-20 |
| 1954 910. . | .23-18-20 |
| 1954 911. . | .23-18-20 |
| 1954 914. . | .23-23-32 |
| 1954 915. . | .23-23-32 |
| 1954 916. . | .23-23-33 |
| 1954 917. . | .23-23-33 |
| 1954 930. . | .23-26-41 |
| 1954 931. . | .23-26-41 |
| 1954 934. . | 23-58-591 |
| 1954 935. . | 23-58-591 |
| 1954 936. . | 23-58-591 |
| 1954 937. . | 23-58-591 |
| 1954 938. . | 23-58-573 |
| 1954 939. . | 23-58-573 |
| 1954 940. . | 23-58-573 |
| 1954 941. . | 23-58-573 |
| 1954 942. . | 23-58-573 |
| 1954 944. . | 23-58-573 |
| 1959 560. . | .23-40-85 |
| 1959 561. . | .23-40-85 |
| 1959 562. . | .23-40-85 |
| 1959 563. . | .23-40-85 |
| 1959 564. . | .23-40-85 |
| 1959 565. . | .23-40-85 |
| 1959 566. . | .23-40-85 |
| 1959 567. . | .23-40-85 |
| 1959 568. . | .23-40-85 |
| 1959 569. . | .23-40-85 |
| 1959 570. . | .23-40-85 |
| 1959 571. . | .23-40-85 |
| 1959 572. . | .23-40-85 |
| 1959 573. . | .23-40-85 |
| 1959 576. . | .23-40-85 |
| 1959 577. . | .23-40-85 |
| 1959 578. . | .23-40-85 |
| 1959 579. . | .23-40-85 |
| 1960 008. . | .23-09-67 |
| 1960 009. . | .23-09-67 |
| 1960 020. . | .23-54-12 |
| 1960 036. . | 23-64-240 |
| 1960 037. . | 23-64-240 |
| 1960 060. . | .23-23-25 |
| 1960 064. . | .23-40-86 |
| 1960 065. . | .23-40-86 |
| 1960 066. . | 23-64-280 |
| 1960 067. . | 23-64-280 |
| 1960 080. . | .23-32-49 |
| 1960 081. . | .23-32-49 |
| 1960 090. . | .23-34-26 |
| 1960 091. . | .23-34-26 |
| 1960 092. . | 23-34-302 |
| 1960 093. . | 23-34-302 |
| 1960 098. . | .23-19-74 |
| 1960 116. . . | 8-57-55 |
| 1960 117. . . | 8-57-56 |
| 1960 118. . . | 8-57-10 |
| 1960 127. . . | 8-47-76 |
| 1960 130. . | .8-47-126 |
| 1960 131. . . | 8-47-67 |
| 1960 149. . | .23-19-74 |
| 1960 166. . | .23-32-49 |
| 1960 167. . | .23-32-49 |
| 1960 170. . . | .8-56-1 |
| 1960 171. . . | .8-56-1 |
| 1960 180. . | .23-32-17 |
| 1960 181. . . | 8-47-68 |
| 1960 182. . . | 23-54-4 |
| 1960 186. . | .23-54-20 |
| 1960 187. . | 23-54-142 |
| 1960 194. . | 23-54-140 |
| 1960 195. . | 23-54-144 |
| 1960 196. . | 23-54-145 |
| 1960 197. . | 23-54-137 |
| 1960 476. . | .23-32-58 |
| 1960 486. . | .23-19-75 |
| 1960 493. . | .23-54-73 |
| 1960 499. . | .23-23-26 |
| 1960 500. . | 23-04-241 |
| 1960 501. . | 23-04-241 |
| 1960 502. . | 23-04-241 |
| 1960 503. . | .23-48-19 |
| 1960 516. . | .23-64-10 |
| 1960 540. . | .23-40-85 |
| 1960 541. . | .23-40-85 |
| 1960 542. . | .23-40-85 |
| 1960 543. . | .23-40-85 |
| 1960 544. . | .23-17-13 |
| 1960 546. . | .23-19-22 |
| 1960 560. . | .23-19-75 |
| 1960 601. . | .23-64-10 |
| 1960 624. . | .23-19-63 |
| 1960 627. . | .23-32-73 |
| | 23-48-11 |
| 1960 636. . | .23-40-85 |
| 1960 648. . | 23-34-242 |
| 1960 649. . | 23-34-242 |
| 1960 689. . | .23-32-79 |
| 1960 714. . | .23-19-63 |
| 1960 784. . | .23-19-74 |
| 1960 785. . | .23-19-74 |
| 1960 792. . | .23-54-18 |
| 1960 872. . . | 8-47-68 |
| 1960 888. . | .8-55-195 |
| 1960 889. . | .8-55-195 |
| 1960 890. . . | 8-56-7 |
| 1960 891. . . | 8-56-7 |
| 1960 892. . . | 8-56-7 |
| 1960 893. . . | 8-56-7 |
| 1960 914. . . | 8-56-43 |
| 1960 948. . | .23-64-48 |
| 1960 949. . | .23-64-48 |
| 1960 969. . | .23-54-90 |
| 1960 970. . | 13-66-106 |
| 1961 014. . . | 8-55-23 |
| 1961 015. . . | 8-55-23 |
| 1961 016. . | 23-34-258 |
| 1961 017. . | 23-34-258 |
| 1961 018. . | .23-40-92 |
| 1961 019. . | .23-40-92 |
| 1961 022. . | 23-34-286 |
| 1961 023. . | 23-34-286 |
| 1961 024. . | 23-34-286 |
| 1961 025. . | 23-34-286 |
| 1961 038. . | 23-19-105 |
| 1961 047. . . | 8-55-8 |
| 1961 048. . | .8-55-214 |
| 1961 057. . | 23-19-105 |
| 1961 064. . | .23-40-85 |
| 1961 065. . | .23-40-85 |
| 1961 066. . . | 23-51-5 |
| 1961 067. . . | 23-51-5 |
| 1961 074. . | .23-17-11 |
| 1961 078. . | .23-19-82 |
| 1961 079. . | .23-19-82 |
| 1961 080. . | .23-19-82 |
| 1961 081. . | .23-19-82 |
| 1961 085. . | .23-48-50 |
| 1961 088. . | 23-58-476 |
| 1961 089. . | 23-58-476 |
| 1961 091. . | .23-48-49 |
| 1961 118. . | 23-54-193 |
| 1961 119. . | 23-54-194 |
| 1961 125. . | 23-54-184 |
| 1961 129. . | 13-66-117 |
| 1961 141. . | 23-34-334 |
| 1961 190. . | 23-64-306 |
| 1961 191. . | 23-64-306 |
| 1961 192. . | 23-64-306 |
| 1961 193. . | 23-64-306 |
| 1961 203. . . | 8-56-40 |
| 1961 210. . | .23-23-41 |
| 1961 212. . | .23-23-73 |
| 1961 213. . | .23-23-73 |
| 1961 214. . | .23-23-73 |
| 1961 215. . | .23-23-73 |
| 1961 228. . . | 8-56-44 |
| 1961 230. . | .23-48-28 |
| 1961 231. . | .23-48-28 |
| 1961 256. . . | 8-56-44 |
| 1961 262. . | .23-15-22 |
| 1961 276. . | 23-64-306 |
| 1961 277. . | 23-64-306 |
| 1961 278. . | 23-64-306 |
| 1961 279. . | 23-64-306 |
| 1961 286. . | .23-23-66 |
| 1961 300. . | .23-23-42 |
| 1961 301. . | .23-23-42 |
| 1961 305. . | 23-34-338 |
| 1961 306. . | .8-55-195 |
| 1961 307. . | .8-55-195 |
| 1961 322. . | 23-19-117 |
| 1961 323. . | 23-19-117 |
| 1961 326. . | .8-55-195 |
| 1961 327. . | .8-55-195 |
| 1961 335. . . | 8-56-1 |
| 1961 344. . . | 8-55-7 |
| 1961 345. . . | 8-55-7 |
| 1961 349. . . | 8-56-41 |
| 1961 352. . . | 8-56-25 |
| 1961 353. . . | 14-87-2 |
| 1961 367. . | .23-54-72 |
| 1961 370. . . | 23-11-1 |
| 1961 371. . . | 23-11-1 |
| 1961 372. . . | 23-11-1 |
| 1961 373. . . | 23-11-1 |
| 1961 374. . . | 23-11-1 |
| 1961 375. . . | 23-11-1 |
| 1961 378. . | .23-09-56 |
| 1961 379. . | .23-09-56 |
| 1961 380. . | .23-09-56 |
| 1961 381. . | .23-09-56 |
| 1961 382. . | .23-09-51 |
| 1961 383. . | .23-09-51 |
| 1961 390. . | .23-09-56 |
| 1961 391. . | .23-09-56 |
| 1961 392. . | .23-09-75 |
| 1961 393. . | .23-09-75 |
| 1961 394. . | .23-09-75 |
| 1961 395. . | .23-09-75 |
| 1961 402. . . | 23-11-3 |
| 1961 403. . . | 23-11-3 |
| 1961 404. . . | 23-11-3 |
| 1961 405. . . | 23-11-3 |
| 1961 422. . | .23-40-92 |
| 1961 423. . | .23-40-92 |
| 1961 434. . . | 8-56-7 |
| 1961 435. . . | 8-56-7 |
| 1961 436. . | .23-48-51 |
| 1961 437. . | .23-48-51 |
| 1961 438. . | .23-48-19 |
| 1961 439. . | .23-48-19 |
| 1961 442. . | 23-34-166 |
| 1961 443. . | 23-34-166 |
| 1961 444. . | 23-34-166 |
| 1961 448. . . | 8-56-44 |



MyMopar.com

| PART NUMBER | CODE |
|---|---|
| 1961 450. . . . | 8-56-1 |
| 1961 451. . . . | 8-56-1 |
| 1961 452. . . | 8-56-23 |
| 1961 468. . . | 23-40-85 |
| 1961 469. . . | 23-40-85 |
| 1961 489. . . | 23-19-60 |
| 1961 507. . . | 23-32-49 |
| 1961 508. . | 23-64-314 |
| 1961 509. . | 23-63-112 |
| 1961 511. . | 23-34-304 |
| 1961 512. . | 23-34-301 |
| 1961 513. . | 23-34-304 |
| 1961 516. . . | 23-23-52 |
| 1961 517. . . | 23-23-52 |
| 1961 541. . . | 23-42-16 |
| 1961 555. . . | 23-42-46 |
| 1961 556. . . | 23-42-46 |
| 1961 584. . . | 23-40-85 |
| 1961 585. . . | 23-40-85 |
| 1961 600. . . | 23-14-10 |
| 1961 601. . . | 23-14-10 |
| 1961 606. . . | 23-14-10 |
| 1961 607. . . | 23-14-10 |
| 1961 618. . . | 23-40-85 |
| 1961 619. . . | 23-40-85 |
| 1961 646. . | 23-64-314 |
| 1961 647. . . . | 8-56-9 |
| 1961 665. . . . | 8-56-7 |
| 1961 681. . | 23-64-197 |
| 1961 692. . . | 23-48-52 |
| 1961 693. . . | 23-48-52 |
| 1961 704. . . | 23-18-13 |
| 1961 705. . . | 23-18-13 |
| 1961 709. . . | 8-56-23 |
| 1961 710. . . | 8-56-66 |
| 1961 711. . . . | 8-56-1 |
| 1961 717. . . | 23-18-11 |
| 1961 724. . . | 23-18-25 |
| 1961 725. . . | 23-18-25 |
| 1961 736. . . | 23-18-20 |
| 1961 737. . . | 23-19-63 |
| 1961 744. . . | 23-18-5 |
| 1961 745. . . | 23-18-5 |
| 1961 746. . . | 23-18-5 |
| 1961 747. . . | 23-18-5 |
| 1961 748. . . | 23-18-13 |
| 1961 749. . . | 23-18-13 |
| 1961 750. . . | 23-18-13 |
| 1961 751. . . | 23-18-13 |
| 1961 752. . . | 23-18-20 |
| 1961 753. . . | 23-18-20 |
| 1961 782. . | 23-64-174 |
| 1961 783. . | 23-64-174 |
| 1961 784. . | 23-64-174 |
| 1961 785. . | 23-64-174 |
| 1961 786. . . | 23-54-1 |
| 1961 787. . . | 23-54-1 |
| 1961 802. . . | 23-64-76 |
| 1961 803. . . | 23-64-76 |
| 1961 822. . | 23-64-198 |
| 1961 823. . | 23-64-198 |
| 1961 826. . . | 8-55-195 |
| 1961 827. . . | 8-55-195 |
| 1961 832. . . . | 8-55-7 |
| 1961 833. . . . | 8-55-7 |
| 1961 848. . | 23-64-306 |
| 1961 849. . | 23-64-306 |
| 1961 850. . | 23-64-306 |
| 1961 851. . | 23-64-306 |
| 1961 862. . . | 23-18-26 |
| 1961 863. . . | 23-18-26 |
| 1961 868. . | 23-63-127 |
| 1961 869. . | 23-63-127 |
| 1961 927. . . | 8-55-214 |
| 1961 930. . | 23-64-306 |
| 1961 931. . | 23-64-306 |
| 1961 932. . | 23-64-306 |
| 1961 933. . | 23-64-306 |
| 1961 934. . . | 8-55-23 |
| 1961 935. . . | 8-55-23 |
| 1961 944. . | 23-34-342 |
| 1961 945. . . . | 8-55-8 |
| 1961 954. . . | 8-56-23 |
| 1961 964. . . | 8-56-10 |
| 1961 965. . . | 8-56-10 |
| 1961 977. . . | 23-64-79 |
| 1961 990. . . . | 8-55-7 |
| 1961 991. . . . | 8-55-7 |
| 1963 002. . | 23-34-120 |
| 1963 003. . | 23-34-120 |
| 1963 008. . | 23-34-235 |
| 1963 009. . | 23-34-235 |
| 1963 010. . | 23-34-235 |
| 1963 011. . | 23-34-235 |
| 1963 012. . | 23-34-233 |
| 1963 013. . | 23-34-233 |
| 1963 016. . | 23-34-301 |
| 1963 017. . | 23-34-301 |
| 1963 022. . | 23-34-233 |
| 1963 023. . | 23-34-233 |
| 1963 024. . | 23-34-176 |
| 1963 025. . | 23-34-176 |
| 1963 026. . | 23-34-235 |
| 1963 027. . | 23-34-235 |
| 1963 028. . | 23-34-233 |
| 1963 029. . | 23-34-233 |
| 1963 030. . | 23-34-235 |
| 1963 031. . | 23-34-235 |
| 1963 032. . | 23-34-233 |
| 1963 033. . | 23-34-233 |
| 1963 076. . | 23-63-172 |
| 1963 110. . . | 23-23-80 |
| 1963 111. . . | 23-23-80 |
| 1963 112. . . | 23-23-85 |
| 1963 113. . . | 23-23-85 |
| 1963 114. . . | 23-23-85 |
| 1963 115. . . | 23-23-85 |
| 1963 126. . . | 23-23-80 |
| | 23-23-85 |
| 1963 127. . . | 23-23-80 |
| | 23-23-85 |
| 1963 146. . . | 23-40-97 |
| 1963 147. . . | 23-40-97 |
| 1963 200. . | 23-61-119 |
| 1963 213. . | 23-34-166 |
| 1963 214. . | 23-34-166 |
| 1963 222. . . | 23-64-12 |
| 1963 228. . . | 23-64-66 |
| 1963 229. . . | 23-64-66 |
| 1963 236. . . | 22-20-87 |
| 1963 237. . . | 22-20-87 |
| 1963 306. . . | 23-64-66 |
| 1963 308. . . | 23-20-24 |
| 1963 309. . . | 23-20-24 |
| 1963 310. . . | 23-20-24 |
| 1963 311. . . | 23-20-24 |
| 1963 330. . . | 23-23-49 |
| 1963 331. . . | 23-23-49 |
| 1963 332. . . | 23-23-49 |
| 1963 333. . . | 23-23-49 |
| 1963 334. . . | 23-23-49 |
| 1963 335. . . | 23-23-49 |
| 1963 336. . . | 23-23-41 |
| 1963 343. . . | 23-20-20 |
| 1963 346. . | 23-22-145 |
| 1963 347. . | 23-22-145 |
| 1963 352. . | 23-20-24 |
| 1963 353. . | 23-20-24 |
| 1963 354. . | 23-20-20 |
| 1963 378. . . | 23-20-24 |
| 1963 379. . . | 23-20-24 |
| 1963 380. . . | 23-20-20 |
| 1963 381. . . | 23-20-20 |
| 1963 392. . . | 23-64-12 |
| 1963 393. . . | 23-64-12 |
| 1963 436. . | 23-34-285 |
| 1963 437. . | 23-34-285 |
| 1963 461. . . | 23-19-55 |
| 1963 464. . . | 23-40-82 |
| 1963 478. . . | 23-19-57 |
| 1963 479. . . . | 8-11-8 |
| 1963 527. . . | 23-19-53 |
| 1963 528. . . | 23-19-61 |
| 1963 552. . | 23-58-224 |
| 1963 553. . | 23-58-224 |
| 1963 602. . . | 8-05-23 |
| 1963 603. . . . | 8-05-6 |
| 1963 606. . . . | 8-05-6 |
| 1963 627. . | 23-34-354 |
| 1963 630. . . | 23-22-85 |
| 1963 631. . . | 23-22-85 |
| 1963 635. . . | 23-36-11 |
| 1963 638. . . | 23-18-20 |
| 1963 639. . . | 23-18-20 |
| 1963 640. . . | 23-26-41 |
| 1963 641. . . | 23-26-41 |
| 1963 648. . . | 23-20-24 |
| 1963 649. . . | 23-20-24 |
| 1963 654. . . | 23-20-24 |
| 1963 655. . . | 23-20-24 |
| 1963 664. . . | 23-19-8 |
| 1963 668. . . | 23-22-86 |
| 1963 669. . . | 23-22-86 |
| 1963 670. . . | 23-22-85 |
| 1963 684. . | 23-63-112 |
| 1963 690. . . | 23-22-7 |
| 1963 691. . . | 23-22-7 |
| 1963 692. . . | 23-22-7 |
| 1963 693. . . | 23-22-7 |
| 1963 708. . . | 23-22-53 |
| 1963 709. . . | 23-22-53 |
| 1963 710. . . | 23-22-53 |
| 1963 711. . . | 23-22-53 |
| 1963 722. . . | 23-22-53 |
| 1963 723. . . | 23-22-53 |
| 1963 732. . . | 23-09-47 |
| 1963 736. . | 23-34-234 |
| 1963 737. . | 23-34-234 |
| 1963 738. . | 23-34-234 |
| 1963 739. . | 23-34-234 |
| 1963 740. . | 23-34-234 |
| 1963 741. . | 23-34-234 |
| 1963 750. . | 23-63-112 |
| 1963 827. . . | 23-41-33 |
| 1963 828. . . | 23-41-33 |
| 1963 851. . . | 23-41-9 |
| 1963 874. . . | 23-41-53 |
| 1963 875. . . | 23-41-53 |
| 1963 910. . . | 23-22-53 |
| 1963 911. . . | 23-22-53 |
| 1963 914. . . | 23-22-53 |
| 1963 915. . . | 23-22-53 |
| 1963 918. . . | 23-22-7 |
| 1963 919. . . | 23-22-7 |
| 1963 924. . . | 8-55-23 |
| 1963 925. . . | 8-55-23 |
| 1963 949. . . | 23-41-9 |
| 1963 952. . . | 23-22-7 |
| 1963 953. . . | 23-22-7 |
| 1963 956. . | 23-22-151 |
| 1963 957. . | 23-22-145 |
| 1963 958. . | 23-22-145 |
| 1963 959. . | 23-22-145 |
| 1963 964. . . | 23-14-21 |
| 1963 996. . . | 23-51-41 |
| 1963 997. . . | 23-51-41 |
| 1964 004. . . | 23-22-7 |
| 1964 005. . . | 23-22-7 |
| 1964 018. . . | 23-09-16 |
| 1964 019. . . | 23-09-16 |
| 1964 073. . . | 23-58-75 |
| 1964 074. . | 23-58-269 |
| 1964 075. . | 23-58-269 |
| 1964 076. . | 23-58-269 |
| 1964 077. . | 23-58-269 |
| 1964 078. . . | 23-58-75 |
| 1964 118. . . | 23-11-1 |
| 1964 119. . . | 23-11-1 |
| 1964 122. . . | 23-11-1 |
| 1964 123. . . | 23-11-1 |
| 1964 124. . . | 23-11-1 |
| 1964 125. . . | 23-11-1 |
| 1964 126. . . | 23-11-3 |
| 1964 127. . . | 23-11-3 |
| 1964 128. . . | 23-11-3 |
| 1964 129. . . | 23-11-3 |
| 1964 130. . . | 23-11-3 |
| 1964 131. . . | 23-11-3 |
| 1964 132. . . | 23-11-3 |
| 1964 133. . . | 23-11-3 |
| 1964 134. . . | 23-11-3 |
| 1964 135. . . | 23-11-3 |
| 1964 136. . . | 23-11-3 |
| 1964 137. . . | 23-11-3 |
| 1964 138. . . | 23-11-3 |
| 1964 139. . . | 23-11-3 |
| 1964 140. . . | 23-11-3 |
| 1964 141. . . | 23-11-3 |
| 1964 152. . . | 23-22-86 |
| 1964 153. . . | 23-22-86 |
| 1964 154. . . | 23-22-86 |
| 1964 158. . . | 23-23-41 |
| 1964 159. . . | 23-23-41 |
| 1964 182. . | 23-34-234 |
| 1964 183. . | 23-34-234 |
| 1964 184. . | 23-34-234 |
| 1964 185. . | 23-34-234 |
| 1964 186. . | 23-34-234 |
| 1964 187. . | 23-34-234 |
| 1964 224. . . | 23-59-61 |
| 1964 225. . . | 23-59-61 |
| 1964 226. . . | 23-59-57 |
| 1964 227. . . | 23-59-57 |
| 1964 228. . . | 23-64-71 |
| 1964 229. . . | 23-64-71 |
| 1964 260. . | 23-58-603 |
| 1964 261. . | 23-64-314 |
| 1964 281. . . | 23-26-41 |
| 1964 280. . . | 23-26-41 |
| 1964 289. . . | 23-41-7 |
| 1964 310. . | 23-34-231 |
| 1964 311. . | 23-34-231 |
| 1964 312. . . | 23-41-7 |
| 1964 348. . . | 23-22-15 |
| | 23-22-151 |
| 1964 352. . . | 23-41-4 |
| 1964 353. . . | 23-41-4 |
| 1964 354. . . | 23-41-4 |
| 1964 355. . . | 23-41-4 |
| 1964 356. . . | 23-41-4 |
| 1964 357. . . | 23-41-4 |
| 1964 358. . . | 23-41-4 |
| 1964 359. . . | 23-41-4 |
| 1964 360. . . | 23-41-4 |
| 1964 361. . . | 23-41-4 |



MyMopar.com

| PART NUMBER | CODE |
|---|---|
| 1964 362. . . | 23-41-4 |
| 1964 363. . . | 23-41-4 |
| 1964 364. . . | 23-41-4 |
| 1964 365. . . | 23-41-4 |
| 1964 402. . | 23-58-555 |
| 1964 414. . . | 23-22-86 |
| 1964 415. . . | 23-22-86 |
| 1964 416. . . | 23-22-86 |
| 1964 418. . . | 23-36-53 |
| 1964 419. . . | 23-36-53 |
| 1964 420. . . | 23-36-53 |
| 1964 421. . . | 23-36-53 |
| 1964 422. . . | 23-36-53 |
| 1964 423. . . | 23-36-53 |
| 1964 492. . . | 23-22-85 |
| 1964 493. . . | 23-22-85 |
| 1964 502. . | 23-34-120 |
| 1964 503. . | 23-34-120 |
| 1964 512. . | 23-19-177 |
| 1964 513. . | 23-19-177 |
| 1964 514. . | 23-34-230 |
| 1964 534. . . | 23-22-7 |
| 1964 535. . . | 23-22-7 |
| 1964 540. . . | 23-22-53 |
| 1964 541. . . | 23-22-53 |
| 1964 596. . . | 23-41-4 |
| 1964 597. . . | 23-41-4 |
| 1964 598. . . | 23-41-4 |
| 1964 599. . . | 23-41-4 |
| 1964 602. . | 23-63-112 |
| 1964 603. . | 23-63-112 |
| 1964 604. . | 23-63-112 |
| 1964 650. . | 23-34-275 |
| 1964 651. . | 23-34-275 |
| 1964 690. . | 23-41-281 |
| 1964 691. . | 23-41-281 |
| 1964 696. . | 23-41-281 |
| 1964 697. . | 23-41-281 |
| 1964 782. . . | 23-18-13 |
| 1964 783. . . | 23-18-13 |
| 1964 784. . . | 23-18-13 |
| 1964 785. . . | 23-18-13 |
| 1964 818. . . | 23-41-53 |
| 1964 819. . . | 23-41-53 |
| 1964 821. . | 23-41-281 |
| 1964 823. . | 23-41-281 |
| 1964 834. . . | 23-18-13 |
| 1964 835. . . | 23-18-13 |
| 1964 836. . . | 23-18-13 |
| 1964 837. . . | 23-18-13 |
| 1964 840. . | 23-34-235 |
| 1964 841. . | 23-34-235 |
| 1964 842. . | 23-34-235 |
| 1964 843. . | 23-34-235 |
| 1964 895. . | 23-58-265 |
| 1964 981. . | 23-58-237 |
| 1969 032. . . | 23-45-20 |
| 1969 200. . . | 23-45-21 |
| 1969 366. . . | 23-47-64 |
| 1969 367. . . | 23-47-66 |
| 1971 015. . . | 8-37-410 |
| 1971 018. . . | 8-37-372 |
| 1971 019. . . | 8-37-372 |
| 1971 043. . . | 1-48-158 |
| 1971 051. . . | 8-15-2 |
| 1971 061. . . | 1-48-572 |
| | 24-01-87 |
| 1971 091. . . | 1-48-158 |
| | 1-87-21 |
| 1971 100. . . | 8-37-178 |
| 1971 104. . . | 8-37-136 |
| 1971 105. . . | 8-37-275 |
| 1971 106. . . | 8-37-316 |
| 1971 107. . . | 8-37-1 |
| 1971 150. . . | 1-48-942 |
| 1971 157. . . | 1-04-4 |
| 1971 162. . . | 1-04-7 |
| 1971 182. . . | 8-37-162 |
| 1971 189. . . | 8-37-178 |
| 1971 193. . . | 23-33-26 |
| 1971 216. . . | 1-48-942 |
| 1971 224. . . | 8-40-8 |
| 1971 231. . . | 1-88-1 |
| 1971 232. . . | 1-88-180 |
| 1971 239. . . | 1-88-170 |
| 1971 241. . . | 1-88-6 |
| 1971 242. . . | 1-88-6 |
| 1971 247. . . | 1-88-1 |
| 1971 256. . . | 23-41-55 |
| 1971 257. . . | 23-41-55 |
| 1971 258. . . | 23-41-55 |
| 1971 273. . . | 14-02-11 |
| 1971 302. . . | 8-50-170 |
| 1971 314. . . | 23-41-167 |
| 1971 328. . . | 8-15-3 |
| 1971 362. . . | 8-32-15 |
| 1971 363. . . | 8-32-15 |
| 1971 376. . . | 1-48-707 |
| 1971 378. . . | 8-50-129 |
| 1971 407. . . | 24-01-48 |
| | 24-28-367 |
| 1971 428. . . | 8-32-15 |
| 1971 429. . . | 8-32-15 |
| 1971 444. . . | 8-37-15 |
| 1971 451. . . | 8-50-82 |
| 1971 454. . . | 8-50-133 |
| 1971 463. . | 24-28-368 |
| 1971 472. . . | 8-15-7 |
| 1971 478. . | 23-41-184 |
| 1971 519. . . | 8-37-90 |
| | 23-33-132 |
| 1971 521. . . | 8-05-24 |
| | 8-42-26 |
| | 23-33-224 |
| | 23-58-533 |
| | 24-24-8 |
| | 24-24-137 |
| | 24-28-357 |
| 1971 522. . | 23-33-132 |
| 1971 587. . . | 8-37-85 |
| 1971 588. . . | 8-37-85 |
| 1971 620. . . | 8-37-15 |
| 1971 622. . . | 8-37-15 |
| 1971 626. . . | 8-37-15 |
| 1971 628. . . | 23-67-41 |
| 1971 660. . . | 1-82-14 |
| 1971 676. . . | 1-48-8 |
| 1971 677. . . | 8-39-3 |
| 1971 693. . . | 1-48-144 |
| | 24-28-370 |
| 1971 705. . | 23-67-160 |
| 1971 707. . | 23-67-160 |
| 1971 750. . . | 8-50-98 |
| 1971 751. . . | 8-50-133 |
| 1971 754. . . | 8-50-129 |
| 1971 773. . . | 8-37-372 |
| 1971 778. . . | 8-37-15 |
| 1971 779. . . | 8-37-15 |
| 1971 789. . . | 8-15-2 |
| 1971 836. . . | 1-48-144 |
| 1971 857. . . | 1-82-6 |
| 1971 868. . . | 1-82-8 |
| 1971 873. . . | 8-35-85 |
| 1971 896. . . | 8-31-3 |
| | 8-37-380 |
| 1971 913. . . | 24-28-24 |
| 1971 931. . . | 8-11-6 |
| | 8-12-2 |
| | 8-31-10 |
| 1971 940. . . | 8-33-90 |
| 1971 978. . . | 8-42-25 |
| 1972 049. . . | 24-24-85 |
| 1972 052. . . | 8-56-2 |
| 1972 060. . . | 1-88-170 |
| 1972 061. . . | 1-88-6 |
| 1972 062. . . | 1-88-6 |
| 1972 063. . . | 1-88-107 |
| 1972 066. . . | 1-88-120 |
| 1972 071. . . | 1-88-1 |
| 1972 074. . . | 1-88-205 |
| 1972 084. . . | 8-35-85 |
| 1972 124. . | 24-28-132 |
| 1972 141. . . | 8-37-415 |
| 1972 146. . | 23-58-535 |
| | 24-24-12 |
| 1972 196. . . | 8-50-82 |
| 1972 201. . . | 8-50-126 |
| 1972 202. . . | 8-50-126 |
| 1972 218. . | 24-24-156 |
| 1972 241. . . | 8-37-317 |
| 1972 250. . . | 8-33-121 |
| 1972 258. . . | 1-87-2 |
| 1972 259. . . | 1-87-2 |
| 1972 316. . | 23-54-167 |
| | 23-58-532 |
| 1972 318. . | 23-58-532 |
| 1972 319. . | 23-58-532 |
| 1972 329. . . | 8-12-2 |
| 1972 344. . . | 8-37-275 |
| 1972 345. . . | 8-37-136 |
| 1972 360. . . | 24-28-73 |
| 1972 368. . . | 1-82-4 |
| 1972 391. . . | 8-33-90 |
| 1972 426. . . | 8-13-2 |
| 1972 430. . . | 8-34-1 |
| 1972 431. . . | 8-34-1 |
| 1972 432. . . | 8-34-1 |
| 1972 433. . . | 8-34-1 |
| 1972 442. . . | 8-34-1 |
| 1972 443. . . | 8-34-1 |
| 1972 444. . . | 8-34-1 |
| 1972 445. . . | 8-34-1 |
| 1972 446. . . | 14-02-15 |
| 1972 461. . . | 8-32-15 |
| 1972 480. . . | 1-19-1 |
| 1972 485. . . | 1-82-38 |
| 1972 489. . | 23-58-543 |
| 1972 490. . . | 1-09-1 |
| 1972 496. . | 23-54-163 |
| 1972 497. . | 23-54-163 |
| 1972 499. . | 24-24-156 |
| 1972 507. . . | 8-05-14 |
| | 8-42-25 |
| 1972 512. . . | 1-82-43 |
| | 23-67-196 |
| 1972 532. . . | 1-21-25 |
| 1972 548. . . | 1-48-309 |
| | 23-54-171 |
| | 23-58-533 |
| | 24-24-137 |
| | 24-28-357 |
| 1972 558. . | 24-24-140 |
| 1972 581. . . | 1-82-43 |
| 1972 588. . . | 1-48-192 |
| 1972 590. . | 24-28-382 |
| 1972 594. . | 24-28-364 |
| 1972 596. . . | 24-24-5 |
| 1972 598. . | 23-47-446 |
| 1972 633. . . | 8-37-15 |
| 1972 635. . . | 8-37-15 |
| 1972 641. . . | 1-82-14 |
| 1972 669. . . | 8-05-14 |
| | 8-42-25 |
| 1972 689. . . | 1-30-1 |
| 1972 690. . . | 1-13-1 |
| 1972 757. . . | 8-37-200 |
| 1972 760. . . | 1-87-70 |
| | 8-37-11 |
| 1972 772. . . | 1-48-300 |
| 1972 774. . . | 1-48-300 |
| 1972 775. . . | 1-48-300 |
| 1972 779. . . | 24-01-36 |
| 1972 781. . . | 24-01-36 |
| 1972 803. . . | 8-15-4 |
| 1972 868. . . | 8-32-15 |
| 1972 869. . . | 8-32-15 |
| 1972 902. . . | 14-02-3 |
| 1972 905. . . | 8-15-2 |
| 1972 906. . . | 14-02-23 |
| 1972 909. . . | 14-02-3 |
| 1972 938. . | 23-18-115 |
| 1972 939. . | 23-18-115 |
| 1972 940. . | 23-18-115 |
| 1972 942. . | 23-18-115 |
| 1972 943. . | 23-18-115 |
| 1972 952. . | 23-18-107 |
| 1972 953. . | 23-18-107 |
| 1972 954. . | 23-18-107 |
| 1972 960. . . | 24-28-75 |
| 1972 961. . . | 24-28-75 |
| 1972 966. . . | 23-17-49 |
| 1972 972. . . | 8-34-177 |
| 1972 996. . . | 24-28-75 |
| 1973 042. . . | 23-36-53 |
| 1973 043. . . | 23-36-53 |
| 1973 044. . . | 23-36-53 |
| 1973 045. . . | 23-36-53 |
| 1973 110. . . | 23-32-48 |
| 1973 132. . . | 23-36-5 |
| 1973 133. . . | 23-36-5 |
| 1973 149. . . | 23-32-48 |
| 1973 152. . | 23-34-167 |
| 1973 153. . | 23-34-167 |
| 1973 174. . | 23-36-118 |
| 1973 175. . | 23-36-118 |
| 1973 211. . . | 23-32-48 |
| 1973 226. . . | 23-32-48 |
| 1973 250. . | 23-34-301 |
| 1973 251. . | 23-34-301 |
| 1973 290. . . | 23-36-5 |
| 1973 291. . . | 23-36-5 |
| 1974 093. . . | 23-26-47 |
| 1974 094. . . | 23-26-47 |
| 1974 095. . . | 23-26-47 |
| 1974 096. . . | 23-26-47 |
| 1974 097. . . | 23-26-23 |
| 1974 104. . . | 23-26-23 |
| 1974 105. . . | 23-26-23 |
| 1974 106. . . | 23-26-23 |
| 1974 107. . . | 23-26-23 |
| 1974 108. . . | 23-26-23 |
| 1974 109. . . | 23-26-23 |
| 1974 110. . . | 23-26-23 |
| 1974 111. . . | 23-26-23 |
| 1974 112. . . | 23-26-23 |
| 1974 113. . . | 23-26-23 |
| 1974 114. . . | 23-26-23 |
| 1974 115. . . | 23-26-23 |
| 1974 116. . . | 23-26-23 |
| 1974 117. . . | 23-26-23 |
| 1974 118. . . | 23-26-23 |
| 1974 119. . . | 23-26-23 |
| 1974 120. . . | 23-26-23 |



MyMopar.com

| PART NUMBER | CODE |
|---|---|
| 1974 121. | 23-26-23 |
| 1974 122. | 23-26-23 |
| 1974 123. | 23-26-23 |
| 1974 765. | 23-26-47 |
| 1974 766. | 23-26-47 |
| 1974 767. | 23-26-23 |
| 1974 768. | 23-26-47 |
| 1974 769. | 23-26-47 |
| 1974 770. | 23-26-47 |
| 1974 771. | 23-26-47 |
| 1974 772. | 23-26-23 |
| 1974 773. | 23-26-23 |
| 1974 774. | 23-26-23 |
| 1974 775. | 23-26-23 |
| 1974 776. | 23-26-23 |
| 1974 778. | 23-26-23 |
| 1974 779. | 23-26-23 |
| 1974 784. | 23-26-23 |
| 1974 785. | 23-26-23 |
| 1977 348. | 15-03-60 |
| 1977 402. | 23-26-23 |
| 1977 403. | 23-26-23 |
| 1977 404. | 23-26-23 |
| 1977 405. | 23-26-23 |
| 1977 406. | 23-26-47 |
| 1977 407. | 23-26-23 |
| 1977 408. | 23-26-23 |
| 1977 448. | 23-58-365 |
| 1977 449. | 23-58-364 |
| 1980 566. | 24-25-15 |
| 1980 568. | 24-25-13 |
| 1980 572. | 24-25-15 |
| 1980 576. | 24-25-15 |
| 1981 854. | 7-06-14 |
| 1982 507. | 24-25-114 |
| 1982 508. | 24-25-110 |
| 1985 513. | 7-02-1 |
| 1985 536. | 24-28-195 |
| 1985 537. | 24-28-210 |
| 1985 539. | 24-28-210 |
| 1985 565. | 24-28-78 |
| 1985 567. | 24-28-98 |
| 1986 051. | 24-25-132 |
| 1986 052. | 24-25-132 |
| 1986 053. | 24-25-120 |
| 1986 054. | 24-25-120 |
| 1989 202. | 24-25-127 |
| 1989 208. | 24-25-127 |
| 1989 773. | 24-25-5 |
| 1991 566. | 24-28-241 |
| 1991 567. | 2[illegible] 28-98 |
| 1991 570. | 24-24-20 |
| 1991 571. | 24-24-5 |
| 1991 572. | 24-28-98 |
| 1991 576. | 24-28-175 |
| 1991 581. | 24-28-220 |
| 1991 604. | 7-03-1 |
| 1991 606. | 8-28-283 |
| 1991 619. | 24-28-300 |
| 1991 620. | 8-28-284 |
| 1991 621. | 8-28-284 |
| 1992 947. | 24-25-133 |
| 1933 685. | 24-25-122 |
| 1993 688. | 7-06-1 |
| 1993 695. | 8-28-285 |
| 1997 527. | 8-28-36 |
| 1997 528. | 8-28-38 |
| 1997 529. | 8-28-14 |
| 2049 389. | 23-23-42 |
| 2070 148. | 3-06-5 |
| 2070 240. | 5-58-1 |
| 2070 242. | 3-06-5 |
| 2070 243. | 3-32-8 |
| 2070 249. | 3-03-1 |
| 2070 262. | 3-03-1 |
| 2070 297. | 3-19-1 |
| 2070 298. | 3-19-1 |
| 2070 304. | 3-19-1 |
| 2070 305. | 3-19-1 |
| 2070 329. | 3-19-1 |
| 2070 333. | 3-03-1 |
| 2070 335. | 3-03-1 |
| 2070 340. | 3-03-1 |
| 2070 342. | 3-03-1 |
| 2072 900. | 6-22-15 |
| 2072 901. | 6-22-19 |
| 2072 902. | 6-22-1 |
| 2073 687. | 6-20-14 |
| 2073 792. | 11-06-8 |
| 2075 009. | 6-22-4 |
| 2076 232. | 5-102-11 |
| | 5-105-1 |
| | 19-31-19 |
| | 23-67-95 |
| 2076 271. | 21-84-4 |
| 2076 632. | 8-15-7 |
| 2080 008. | 23-33-12 |
| 2080 010. | 23-54-63 |
| 2080 011. | 23-54-63 |
| 2080 012. | 23-54-63 |
| 2080 014. | 23-33-42 |
| 2080 048. | 23-33-153 |
| 2080 052. | 23-26-23 |
| 2080 053. | 23-26-23 |
| 2080 058. | 23-33-12 |
| 2080 124. | 8-37-90 |
| 2080 125. | 23-22-148 |
| 2080 151. | 8-37-178 |
| 2080 152. | 23-33-216 |
| 2080 181. | 23-02-1 |
| 2080 184. | 23-02-1 |
| 2080 187. | 23-45-52 |
| 2080 201. | 23-06-14 |
| | 23-08-12 |
| 2080 202. | 23-33-86 |
| 2080 227. | 8-35-111 |
| | 23-17-2 |
| 2080 234. | 23-02-43 |
| 2080 238. | 23-33-65 |
| 2080 242. | 23-33-109 |
| 2080 279. | 23-33-132 |
| 2080 280. | 8-05-23 |
| 2080 284. | 23-22-148 |
| 2080 285. | 23-22-160 |
| 2080 306. | 23-22-145 |
| 2080 307. | 23-22-145 |
| 2080 314. | 23-22-53 |
| 2080 315. | 23-22-53 |
| 2080 317. | 23-45-54 |
| 2080 321. | 23-06-28 |
| 2080 329. | 23-47-383 |
| 2080 330. | 23-47-384 |
| 2080 331. | 23-47-384 |
| 2080 338. | 23-33-42 |
| 2080 362. | 23-33-86 |
| 2080 382. | 23-26-45 |
| 2080 383. | 23-26-45 |
| 2080 384. | 23-26-45 |
| 2080 385. | 23-26-45 |
| 2080 386. | 23-26-45 |
| 2080 387. | 23-26-45 |
| 2080 388. | 1-48-26 |
| | 23-33-227 |
| | 24-24-170 |
| 2080 394. | 23-26-23 |
| 2080 395. | 23-26-23 |
| 2080 396. | 23-26-2 |
| | 23-26-23 |
| 2080 397. | 23-26-2 |
| | 23-26-23 |
| 2080 411. | 23-21-14 |
| 2080 413. | 23-02-62 |
| | 23-02-78 |
| 2080 438. | 23-26-47 |
| 2080 439. | 23-26-47 |
| 2080 440. | 23-26-47 |
| 2080 441. | 23-26-47 |
| 2080 456. | 23-47-375 |
| | 23-47-385 |
| 2080 457. | 23-33-227 |
| 2080 458. | 23-06-21 |
| 2080 466. | 23-47-386 |
| 2080 470. | 23-33-86 |
| 2080 471. | 23-21-65 |
| 2080 478. | 23-47-287 |
| 2080 480. | 23-02-38 |
| | 23-06-14 |
| 2080 488. | 23-06-41 |
| 2080 489. | 23-21-66 |
| 2080 539. | 23-21-66 |
| 2080 540. | 23-21-67 |
| 2080 541. | 1-76-24 |
| | 23-21-3 |
| | 23-21-74 |
| 2080 544. | 23-26-47 |
| 2080 545. | 23-26-47 |
| 2080 550. | 23-06-4 |
| 2080 554. | 23-06-13 |
| 2080 559. | 23-33-86 |
| 2080 568. | 4-25-2 |
| 2080 575. | 23-17-10 |
| 2080 596. | 23-02-149 |
| 2080 639. | 23-02-1 |
| 2080 641. | 23-02-1 |
| 2080 642. | 23-02-1 |
| 2080 644. | 23-26-47 |
| 2080 645. | 23-26-47 |
| 2080 649. | 23-33-10 |
| 2080 652. | 23-07-169 |
| 2080 653. | 23-07-169 |
| 2080 670. | 23-02-89 |
| 2080 671. | 23-02-89 |
| 2080 673. | 23-54-75 |
| 2080 679. | 23-33-10 |
| 2080 693. | 15-14-1 |
| 2080 694. | 23-33-227 |
| 2080 698. | 23-21-66 |
| 2080 699. | 23-21-66 |
| 2080 721. | 1-76-20 |
| | 23-21-32 |
| 2080 736. | 23-06-28 |
| 2080 763. | 23-31-124 |
| 2080 764. | 23-31-124 |
| 2080 765. | 23-31-124 |
| 2080 766. | 23-31-124 |
| 2080 767. | 23-31-124 |
| 2080 768. | 23-31-124 |
| 2080 769. | 23-31-124 |
| 2080 774. | 23-21-14 |
| 2080 776. | 23-21-26 |
| 2080 782. | 23-22-145 |
| 2080 783. | 23-22-145 |
| 2080 784. | 23-02-2 |
| 2080 791. | 8-37-178 |
| 2080 827. | 23-47-6 |
| 2080 828. | 23-47-6 |
| 2080 839. | 1-76-24 |
| | 23-21-74 |
| 2080 858. | 23-22-53 |
| 2080 859. | 23-22-53 |
| 2080 861. | 1-76-20 |
| | 23-21-32 |
| 2080 863. | 23-33-86 |
| 2080 874. | 23-21-45 |
| 2080 875. | 23-21-45 |
| 2080 888. | 23-33-52 |
| 2080 889. | 23-33-26 |
| 2080 892. | 23-33-129 |
| 2080 893. | 23-33-86 |
| 2080 894. | 15-14-1 |
| 2080 897. | 23-21-14 |
| 2080 899. | 23-33-10 |
| 2080 904. | 23-47-6 |
| 2080 905. | 23-47-6 |
| 2080 913. | 8-37-178 |
| 2080 916. | 23-33-53 |
| 2080 921. | 1-76-1 |
| | 23-21-15 |
| 2080 935. | 23-31-119 |
| 2080 936. | 23-31-119 |
| 2080 937. | 23-31-119 |
| 2080 938. | 23-31-119 |
| 2080 939. | 23-31-119 |
| 2080 940. | 23-33-109 |
| 2080 941. | 23-33-109 |
| 2080 942. | 23-33-147 |
| 2080 944. | 23-45-33 |
| 2080 945. | 23-45-33 |
| 2080 946. | 23-47-451 |
| 2080 950. | 23-06-102 |
| 2080 951. | 23-47-16 |
| 2080 952. | 23-47-6 |
| 2080 953. | 23-47-6 |
| 2080 956. | 23-47-6 |
| 2080 957. | 23-47-6 |
| 2080 960. | 23-33-96 |
| 2080 965. | 23-33-12 |
| 2080 982. | 23-08-13 |
| | 23-26-23 |
| 2080 984. | 23-06-53 |
| 2080 985. | 23-06-53 |
| 2080 986. | 23-06-53 |
| 2080 987. | 23-06-53 |
| 2080 992. | 23-33-56 |
| 2080 993. | 23-33-12 |
| 2080 996. | 8-20-16 |
| 2084 005. | 9-09-2 |
| 2084 006. | 9-09-2 |
| 2084 007. | 9-09-2 |
| 2084 008. | 9-09-2 |
| 2084 019. | 2-14-8 |
| 2084 020. | 2-14-8 |
| 2084 021. | 2-14-8 |
| 2084 022. | 2-14-8 |
| 2084 030. | 9-41-4 |
| 2084 031. | 9-41-4 |
| 2084 032. | 9-41-4 |
| 2084 045. | 2-10-57 |
| 2084 052. | 8-56-3 |
| 2084 053. | 8-56-3 |
| 2084 054. | 1-48-70 |
| | 24-24-112 |
| | 24-24-140 |
| 2084 055. | 1-48-70 |
| 2084 057. | 8-53-270 |
| 2084 062. | 14-72-1 |
| 2084 063. | 14-72-1 |
| 2084 064. | 8-36-1 |
| 2084 065. | 8-36-1 |
| 2084 066. | 8-55-194 |
| 2084 067. | 8-55-1 |
| 2084 070. | 8-01-17 |
| 2084 071. | 8-01-17 |
| 2084 072. | 8-37-177 |



MyMopar.com

| PART NUMBER | CODE |
|---|---|
| 2084 078. . . | 8-27-158 |
| 2084 079. . . | 8-27-158 |
| 2084 080. . . | 8-27-158 |
| 2084 083. . . | 8-27-316 |
| 2084 088. . . | 8-52-214 |
| 2084 090. . . | 8-52-344 |
| 2084 091. . . | 8-52-341 |
| 2084 093. . . | 8-52-49 |
| 2084 094. . . | 8-52-354 |
| 2084 095. . . | 8-52-140 |
| 2084 163. . . | 14-41-3 |
| 2084 164. . . | 14-30-4 |
| 2084 165. . . | 14-43-5 |
| 2084 166. . . | 14-35-1 |
| 2084 176. . . | 14-30-4 |
| 2084 177. . . | 14-30-4 |
| 2084 178. . . | 14-30-4 |
| 2084 179. . . | 14-43-5 |
| 2084 181. . . | 14-35-1 |
| 2084 182. . . | 14-43-5 |
| 2084 184. . . | 14-43-5 |
| 2084 187. . . | 14-30-4 |
| 2084 188. . . | 14-30-4 |
| 2084 189. . . | 14-30-4 |
| 2084 190. . . | 14-30-4 |
| 2084 192. . . | 14-30-7 |
| 2084 194. . . | 14-43-5 |
| 2084 196. . . | 14-30-4 |
| 2084 199. . . | 14-30-4 |
| 2084 200. . . | 14-30-7 |
| 2084 214. . . | 2-10-57 |
| 2084 215. . . | 19-15-39 |
| 2084 217. . . | 8-36-1 |
| 2084 219. . . | 8-36-1 |
| 2084 225. . . | 9-01-5 |
| 2084 226. . . | 9-39-1 |
| 2084 230. . . | 4-03-6 |
| 2084 236. . . | 17-16-1 |
| 2084 241. . . | 2-14-8 |
| 2084 242. . . | 2-14-8 |
| 2084 243. . . | 21-01-3 |
| 2084 250. . . | 6-17-3 |
| 2084 252. . . | 2-08-57 |
| 2084 253. . . | 2-10-55 |
| 2084 254. . . | 5-63-1 |
| 2084 255. . . | 5-63-3 |
| 2084 256. . . | 5-63-3 |
| 2084 257. . . | 5-03-9 |
| 2084 258. . . | 14-67-1 |
| 2084 262. . . | 8-56-8 |
| 2084 265. . . | 8-29-154 |
| 2084 272. . . | 14-72-1 |
| 2084 284. . . | 8-58-60 |
| 2084 295. . | 24-28-295 |
| | 24-28-379 |
| 2084 296. . . | 8-05-14 |
| | 8-53-270 |
| 2084 297. . | 23-67-160 |
| 2084 304. . . | 8-50-103 |
| 2084 319. . . | 21-118-5 |
| 2084 321. . . | 21-118-9 |
| 2084 347. . . | 9-50-1 |
| 2084 352. . . | 2-07-1 |
| 2084 353. . . | 2-07-1 |
| 2084 354. . . | 10-07-3 |
| 2084 355. . . | 10-07-2 |
| 2084 368. . . | 8-36-1 |
| 2084 380. . . | 9-32-2 |
| 2084 381. . . | 9-32-2 |
| 2084 382. . . | 9-32-2 |
| 2084 383. . . | 9-32-2 |
| 2084 384. . . | 9-34-5 |
| 2084 385. . . | 9-34-5 |
| 2084 386. . . | 9-34-5 |
| 2084 387. . . | 9-34-5 |
| 2084 388. . . | 9-34-5 |
| 2084 389. . . | 9-34-5 |
| 2084 390. . . | 9-34-5 |
| 2084 391. . . | 9-09-2 |
| 2084 392. . . | 9-09-2 |
| 2084 393. . . | 9-09-2 |
| 2084 394. . . | 9-09-2 |
| 2084 395. . . | 9-09-2 |
| 2084 396. . . | 9-09-2 |
| 2084 397. . . | 9-09-2 |
| 2084 398. . . | 9-09-2 |
| 2084 399. . . | 9-09-2 |
| 2084 400. . . | 9-09-2 |
| 2084 401. . . | 9-09-2 |
| 2084 402. . . | 9-09-2 |
| 2084 403. . . | 9-10-5 |
| | 9-10-6 |
| 2084 404. . . | 9-10-8 |
| 2084 405. . . | 9-10-7 |
| 2084 409. . . | 7-42-1 |
| 2084 411. . . | 9-11-1 |
| 2084 415. . . | 10-07-3 |
| 2084 416. . . | 9-50-1 |
| 2084 420. . . | 8-16-1 |
| 2084 421. . . | 8-16-1 |
| 2084 422. . . | 8-37-17 |
| 2084 423. . . | 8-33-164 |
| 2084 424. . . | 8-16-1 |
| 2084 425. . . | 8-16-1 |
| 2084 427. . . | 8-36-49 |
| 2084 441. . . | 8-06-1 |
| 2084 445. . | 23-41-106 |
| 2084 446. . | 23-41-106 |
| 2084 448. . . | 8-27-137 |
| 2084 449. . . | 24-24-5 |
| 2084 450. . . | 24-24-5 |
| 2084 456. . . | 8-36-1 |
| 2084 458. . . | 8-36-1 |
| 2084 459. . . | 8-37-155 |
| 2084 460. . . | 1-48-854 |
| 2084 461. . . | 1-48-854 |
| 2084 467. . . | 14-67-10 |
| 2084 493. . | 23-34-235 |
| 2084 494. . | 23-34-235 |
| 2084 495. . | 23-34-235 |
| 2084 496. . | 23-34-235 |
| 2084 497. . | 23-34-235 |
| 2084 498. . | 23-34-235 |
| 2084 499. . | 23-34-235 |
| 2084 500. . | 23-34-235 |
| 2084 501. . | 23-34-235 |
| 2084 502. . | 23-34-235 |
| 2084 503. . | 23-34-235 |
| 2084 504. . | 23-34-235 |
| 2084 505. . | 23-34-235 |
| 2084 506. . | 23-34-235 |
| 2084 507. . | 23-34-235 |
| 2084 508. . | 23-34-235 |
| 2084 509. . | 23-34-235 |
| 2084 510. . | 23-34-235 |
| 2084 511. . | 23-34-235 |
| 2084 512. . | 23-34-235 |
| 2084 513. . | 23-34-167 |
| 2084 514. . | 23-34-167 |
| 2084 516. . . | 23-34-27 |
| 2084 517. . . | 23-34-27 |
| 2084 518. . . | 23-34-27 |
| 2084 519. . . | 23-34-27 |
| 2084 520. . . | 23-34-27 |
| 2084 521. . . | 23-34-27 |
| 2084 522. . . | 23-34-27 |
| 2084 523. . . | 23-34-27 |
| 2084 524. . . | 23-34-27 |
| 2084 525. . . | 23-34-27 |
| 2084 526. . . | 23-34-27 |
| 2084 527. . . | 23-34-27 |
| 2084 528. . . | 23-34-27 |
| 2084 529. . . | 23-34-27 |
| 2084 530. . . | 23-51-3 |
| 2084 531. . . | 23-51-3 |
| 2084 532. . . | 23-51-3 |
| 2084 533. . . | 23-51-3 |
| 2084 534. . | 23-34-110 |
| 2084 538. . . | 23-34-80 |
| 2084 539. . . | 23-34-80 |
| 2084 540. . | 23-34-235 |
| 2084 541. . | 23-34-235 |
| 2084 542. . | 23-34-235 |
| 2084 543. . | 23-34-235 |
| 2084 546. . . | 1-76-1 |
| 2084 547. . . | 23-11-23 |
| 2084 548. . | 23-34-235 |
| 2084 549. . | 23-34-235 |
| 2084 562. . | 23-34-240 |
| 2084 563. . | 23-34-240 |
| 2084 564. . | 23-34-334 |
| 2084 580. . . | 10-01-3 |
| 2084 602. . . | 21-138-2 |
| 2084 603. . . | 19-01-3 |
| 2084 616. . . | 21-01-3 |
| 2084 617. . . | 21-01-3 |
| 2084 628. . . | 22-01-5 |
| 2084 645. . . | 8-36-1 |
| 2084 653. . . | 8-27-352 |
| 2084 654. . . | 8-27-71 |
| 2084 655. . . | 8-27-85 |
| 2084 657. . . | 8-27-279 |
| 2084 659. . . | 8-52-241 |
| 2084 660. . . | 8-52-2 |
| 2084 661. . . | 8-52-135 |
| 2084 664. . . | 8-52-13 |
| 2084 665. . . | 8-52-137 |
| 2084 666. . . | 8-52-140 |
| 2084 667. . . | 8-52-275 |
| 2084 670. . . | 8-55-1 |
| 2084 671. . . | 8-55-1 |
| 2084 672. . . | 8-42-2 |
| 2084 673. . . | 8-29-17 |
| 2084 674. . . | 8-29-135 |
| 2084 675. . . | 8-29-129 |
| 2084 710. . . | 14-30-4 |
| 2084 711. . . | 14-30-7 |
| 2084 713. . . | 14-30-8 |
| 2084 714. . . | 14-35-1 |
| 2084 715. . . | 14-35-6 |
| 2084 725. . . | 14-30-4 |
| 2084 726. . . | 14-30-4 |
| 2084 727. . . | 14-30-4 |
| 2084 728. . . | 14-30-7 |
| 2084 729. . . | 14-35-1 |
| 2084 730. . . | 14-41-3 |
| 2084 731. . . | 14-35-6 |
| 2084 732. . . | 14-30-8 |
| 2084 733. . . | 14-41-3 |
| 2084 735. . | 23-34-334 |
| 2084 736. . | 23-34-334 |
| 2084 737. . . | 23-23-2 |
| 2084 738. . . | 23-23-39 |
| 2084 739. . . | 23-23-39 |
| 2084 740. . . | 23-23-39 |
| 2084 741. . . | 23-23-39 |
| 2084 758. . . | 23-34-80 |
| 2084 759. . . | 23-34-80 |
| 2084 760. . . | 23-34-80 |
| 2084 761. . . | 23-34-80 |
| 2084 762. . . | 23-34-80 |
| 2084 763. . . | 23-34-80 |
| 2084 770. . . | 23-23-52 |
| 2084 771. . . | 23-23-52 |
| 2084 772. . . | 23-23-39 |
| 2084 773. . . | 23-23-39 |
| 2084 774. . . | 23-23-52 |
| 2084 775. . . | 23-23-52 |
| 2084 776. . . | 23-23-52 |
| 2084 778. . . | 23-23-52 |
| 2084 779. . . | 23-23-52 |
| 2084 780. . . | 23-23-52 |
| 2084 781. . . | 23-23-52 |
| 2084 782. . . | 23-23-52 |
| 2084 783. . . | 23-23-52 |
| 2084 784. . . | 23-23-52 |
| 2084 785. . . | 23-23-52 |
| 2084 786. . . | 1-02-1 |
| 2084 787. . . | 1-76-1 |
| | 23-21-3 |
| 2084 792. . . | 9-58-1 |
| 2084 794. . . | 9-58-1 |
| 2084 795. . . | 9-58-1 |
| 2084 797. . . | 9-58-1 |
| 2084 798. . . | 22-03-1 |
| 2084 799. . . | 22-03-1 |
| 2084 809. . . | 1-42-1 |
| 2084 810. . . | 9-09-2 |
| 2084 811. . . | 9-09-2 |
| 2084 812. . . | 9-09-2 |
| 2084 813. . . | 9-09-2 |
| 2084 814. . . | 9-09-2 |
| 2084 815. . . | 9-09-2 |
| 2084 816. . . | 9-09-2 |
| 2084 817. . . | 9-09-2 |
| 2084 818. . . | 17-12-4 |
| 2084 819. . . | 17-12-4 |
| 2084 820. . . | 17-12-4 |
| 2084 821. . . | 17-12-4 |
| 2084 822. . . | 17-12-4 |
| 2084 823. . . | 17-12-4 |
| 2084 824. . . | 17-12-4 |
| 2084 825. . . | 17-12-4 |
| 2084 826. . . | 17-12-4 |
| 2084 827. . . | 17-12-4 |
| 2084 828. . . | 17-12-4 |
| 2084 829. . . | 9-09-2 |
| 2084 830. . . | 9-09-2 |
| 2084 831. . . | 9-09-2 |
| 2084 832. . . | 9-09-2 |
| 2084 833. . . | 9-09-2 |
| 2084 834. . . | 9-09-2 |
| 2084 835. . . | 9-09-2 |
| 2084 836. . . | 9-09-2 |
| 2084 839. . . | 19-01-4 |
| 2084 840. . . | 19-01-4 |
| 2084 843. . . | 8-27-1 |
| 2084 847. . . | 8-35-4 |
| 2084 849. . | 23-41-106 |
| 2084 852. . . | 8-29-146 |
| 2084 853. . . | 8-29-193 |
| 2084 854. . . | 8-29-41 |
| 2084 855. . . | 8-29-100 |
| 2084 856. . . | 8-27-279 |
| 2084 857. . . | 8-27-308 |
| 2084 859. . . | 14-73-1 |
| 2084 860. . . | 8-29-172 |
| 2084 861. . . | 8-29-100 |
| 2084 862. . . | 1-48-599 |
| 2084 866. . . | 8-27-279 |
| 2084 867. . . | 8-27-133 |
| 2084 868. . . | 8-27-308 |
| 2084 869. . . | 8-27-352 |
| 2084 870. . . | 8-27-18 |
| 2084 887. . . | 8-27-279 |
| 2084 888. . . | 8-27-308 |



MyMopar.com

| PART NUMBER | CODE |
|---|---|
| 2084 889. . . | 8-27-279 |
| 2084 891. . . | 8-27-279 |
| 2084 892. . . | 8-27-279 |
| 2084 893. . . | 8-27-308 |
| 2084 898. . . | 17-11-3 |
| 2084 900. . . | 17-11-3 |
| 2084 901. . . | 17-11-3 |
| 2084 902. . . | 17-11-3 |
| 2084 903. . . | 17-11-3 |
| 2084 906. . . | 17-11-3 |
| 2084 907. . . | 17-11-3 |
| 2084 908. . . | 17-11-3 |
| 2084 909. . . | 17-11-3 |
| 2084 910. . . | 17-11-3 |
| 2084 911. . . | 17-11-3 |
| 2084 914. . . | 5-100-1 |
| | 17-11-3 |
| 2084 915. . . | 17-11-3 |
| 2084 916. . . | 5-100-1 |
| 2084 917. . . | 5-100-1 |
| 2084 997. . . | 23-23-65 |
| 2084 998. . . | 23-23-65 |
| 2084 999. . . | 23-23-65 |
| 2085 012. . . | 23-26-23 |
| 2085 013. . . | 23-26-23 |
| 2085 090. . . | 23-26-23 |
| 2085 091. . . | 23-26-23 |
| 2085 108. . . | 23-26-47 |
| 2085 130. . . | 23-26-23 |
| 2085 131. . . | 23-26-23 |
| 2085 158. . . | 23-26-23 |
| 2085 159. . . | 23-26-23 |
| 2085 170. . . | 23-26-23 |
| 2085 172. . . | 23-26-23 |
| 2085 173. . . | 23-26-23 |
| 2085 234. . . | 23-26-47 |
| 2085 235. . . | 23-26-47 |
| 2085 246. . . | 23-26-23 |
| 2085 247. . . | 23-26-23 |
| 2085 248. . . | 23-26-23 |
| 2085 249. . . | 23-26-23 |
| 2085 250. . . | 23-26-23 |
| 2085 251. . . | 23-26-23 |
| 2085 252. . . | 23-14-79 |
| 2085 445. . . | 23-26-47 |
| 2085 446. . . | 23-26-47 |
| 2085 458. . . | 23-26-59 |
| 2085 459. . . | 23-26-59 |
| 2085 470. . . | 23-26-23 |
| 2085 471. . . | 23-26-23 |
| 2085 475. . . | 23-26-23 |
| 2085 478. . . | 23-26-47 |
| 2085 479. . . | 23-26-47 |
| 2085 480. . . | 23-26-23 |
| | 23-26-47 |
| 2085 481. . . | 23-26-23 |
| | 23-26-47 |
| 2085 482. . | 23-63-14 |
| | 23-63-20 |
| 2085 492. . . | 23-26-23 |
| 2085 493. . . | 23-26-47 |
| 2085 514. . . | 23-02-89 |
| 2085 515. . . | 23-02-89 |
| 2085 590. . . | 23-26-46 |
| 2085 591. . . | 23-26-46 |
| 2085 602. . . | 23-26-46 |
| 2085 603. . . | 23-26-46 |
| 2085 660. . . | 23-26-23 |
| 2085 661. . . | 23-26-23 |
| 2085 709. . . | 23-26-23 |
| 2085 710. . . | 23-63-14 |
| 2085 711. . . | 23-63-14 |
| 2085 712. . . | 23-63-14 |
| 2085 713. . . | 23-63-14 |
| 2085 714. . . | 23-26-23 |
| 2085 715. . . | 23-26-23 |
| 2085 722. . . | 23-63-14 |
| 2085 723. . . | 23-63-14 |
| 2085 756. . . | 23-26-23 |
| 2085 757. . . | 23-26-23 |
| 2085 758. . . | 23-26-23 |
| 2085 759. . . | 23-26-23 |
| 2085 764. . . | 23-63-14 |
| 2085 765. . . | 23-63-14 |
| 2085 774. . . | 23-26-23 |
| 2085 775. . . | 23-26-23 |
| 2085 778. . . | 23-26-47 |
| 2085 780. . . | 23-63-14 |
| 2085 781. . . | 23-63-14 |
| 2085 784. . . | 23-26-23 |
| 2085 785. . . | 23-26-23 |
| 2085 788. . . | 23-26-23 |
| 2085 792. . . | 23-26-23 |
| 2085 800. . . | 23-26-23 |
| 2085 826. . . | 23-26-2 |
| 2085 827. . . | 23-26-2 |
| 2085 844. . . | 23-26-47 |
| 2085 845. . . | 23-26-47 |
| 2085 846. . . | 23-26-47 |
| 2085 850. . . | 23-26-23 |
| 2085 851. . . | 23-26-23 |
| 2085 854. . . | 23-26-23 |
| 2085 856. . . | 23-26-23 |
| 2085 862. . . | 23-14-51 |
| | 23-26-23 |
| 2085 865. . . | 23-31-33 |
| 2085 899. . . | 23-14-51 |
| 2085 919. . . | 23-26-80 |
| 2085 958. . . | 23-26-47 |
| 2086 036. . . | 23-14-21 |
| 2086 047. . . | 8-35-115 |
| 2086 048. . . | 23-17-24 |
| 2086 049. . . | 23-17-5 |
| 2086 050. . . | 23-17-5 |
| 2086 051. . . | 23-06-28 |
| 2086 052. . . | 23-17-4 |
| 2086 054. . . | 23-22-53 |
| 2086 055. . . | 23-22-53 |
| 2086 056. . . | 23-22-86 |
| 2086 057. . . | 23-22-86 |
| 2086 058. . . | 23-26-41 |
| 2086 059. . . | 23-26-41 |
| 2086 114. . . | 23-02-81 |
| 2086 168. . . | 23-22-85 |
| 2086 174. . . | 15-03-60 |
| 2086 175. . . | 15-03-60 |
| 2086 176. . . | 15-03-60 |
| 2086 177. . . | 23-26-47 |
| 2086 275. . . | 23-21-14 |
| 2086 338. . . | 23-26-47 |
| 2086 360. . . | 23-26-34 |
| 2086 362. . . | 23-26-34 |
| 2086 460. . . | 23-38-17 |
| 2086 461. . . | 23-38-16 |
| 2086 574. . . | 23-54-26 |
| 2086 611. . . | 23-02-1 |
| | 23-02-145 |
| 2086 634. . . | 1-87-6 |
| 2086 674. . . | 23-14-27 |
| 2086 675. . . | 23-14-27 |
| 2086 720. . . | 15-14-1 |
| 2086 735. . | 23-19-133 |
| 2086 839. . . | 23-38-20 |
| 2086 840. . . | 23-38-19 |
| 2089 891. . . | 15-03-60 |
| 2089 893. . . | 23-31-33 |
| 2091 545. . . | 23-20-8 |
| 2091 552. . . | 23-20-41 |
| 2091 764. . . | 23-20-11 |
| 2092 184. . . | 23-47-66 |
| 2092 187. . . | 23-45-18 |
| 2092 226. . . | 23-45-18 |
| 2092 230. . . | 23-45-18 |
| 2092 231. . . | 23-45-18 |
| 2092 241. . . | 23-45-24 |
| 2093 003. . . | 8-56-66 |
| 2093 023. . . | 8-55-195 |
| 2093 030. . . | 23-64-75 |
| 2093 031. . . | 23-64-75 |
| 2093 048. . . | 23-64-78 |
| 2093 049. . . | 23-64-78 |
| 2093 056. . | 23-63-171 |
| 2093 086. . | 23-63-172 |
| 2093 104. . . | 23-39-18 |
| 2093 105. . . | 23-39-18 |
| 2093 129. . | 23-41-259 |
| 2093 130. . | 23-41-260 |
| 2093 131. . | 23-41-261 |
| 2093 136. . . | 23-23-14 |
| 2093 137. . . | 23-23-14 |
| 2093 172. . . | 8-55-8 |
| 2093 174. . . | 23-59-61 |
| 2093 175. . . | 23-59-61 |
| 2093 196. . | 23-34-301 |
| 2093 198. . . | 8-55-7 |
| 2093 199. . . | 8-55-7 |
| 2093 200. . | 23-63-100 |
| 2093 201. . | 23-63-100 |
| 2093 202. . | 23-34-301 |
| 2093 236. . | 23-48-101 |
| 2093 237. . | 23-48-101 |
| 2093 246. . | 23-63-33 |
| 2093 247. . | 23-63-33 |
| 2093 360. . | 23-34-339 |
| 2093 361. . | 23-34-339 |
| 2093 366. . | 23-63-55 |
| 2093 367. . | 23-63-55 |
| 2093 368. . | 23-34-235 |
| 2093 369. . | 23-34-235 |
| 2093 370. . | 23-34-235 |
| 2093 371. . | 23-34-235 |
| 2093 372. . | 23-34-235 |
| 2093 373. . | 23-34-235 |
| 2093 374. . . | 8-55-209 |
| 2093 375. . . | 8-55-8 |
| 2093 380. . | 23-40-185 |
| 2093 381. . | 23-40-185 |
| 2093 382. . | 23-40-177 |
| 2093 383. . | 23-40-177 |
| 2093 386. . | 23-40-190 |
| 2093 387. . | 23-40-150 |
| 2093 388. . | 23-40-150 |
| 2093 390. . | 23-40-170 |
| 2093 391. . | 23-40-170 |
| 2093 394. . | 23-40-187 |
| 2093 398. . | 23-63-112 |
| 2093 399. . | 23-63-112 |
| 2093 412. . | 23-18-26 |
| 2093 413. . | 23-18-26 |
| 2093 422. . | 23-19-89 |
| 2093 440. . | 23-42-23 |
| 2093 442. . . | 8-55-7 |
| 2093 443. . . | 8-55-7 |
| 2093 446. . . | 23-39-5 |
| 2093 447. . . | 23-39-5 |
| 2093 456. . . | 23-39-5 |
| 2093 457. . . | 23-39-5 |
| 2093 478. . | 23-34-228 |
| 2093 479. . | 23-23-41 |
| 2093 486. . . | 23-39-5 |
| 2093 487. . . | 23-39-5 |
| 2093 494. . | 23-54-28 |
| 2093 530. . | 23-19-84 |
| 2093 546. . | 23-63-21 |
| 2093 547. . | 23-63-21 |
| 2093 554. . | 23-64-265 |
| 2093 555. . | 23-64-265 |
| 2093 556. . | 23-64-265 |
| 2093 557. . | 23-64-265 |
| 2093 619. . | 23-22-145 |
| 2093 628. . | 23-63-33 |
| 2093 629. . | 23-63-33 |
| 2093 630. . | 23-63-33 |
| 2093 631. . | 23-63-33 |
| 2093 638. . | 23-66-235 |
| 2093 645. . | 23-63-172 |
| 2093 646. . | 23-48-78 |
| | 23-48-108 |
| 2093 647. . | 23-48-78 |
| | 23-48-108 |
| 2093 648. . | 23-59-61 |
| 2093 649. . | 23-59-61 |
| 2093 652. . | 23-63-112 |
| 2093 666. . | 23-34-227 |
| 2093 667. . | 23-34-227 |
| 2093 675. . | 23-08-12 |
| 2093 714. . | 23-63-55 |
| 2093 715. . | 23-63-55 |
| 2093 718. . | 23-19-64 |
| 2093 722. . | 23-63-15 |
| 2093 723. . | 23-63-15 |
| 2093 742. . | 8-55-209 |
| 2093 743. . | 8-55-209 |
| 2093 809. . | 23-64-71 |
| 2093 828. . | 23-14-47 |
| 2093 829. . | 23-14-47 |
| 2093 836. . | 23-42-13 |
| 2093 837. . | 23-42-13 |
| 2093 838. . | 23-34-32 |
| 2093 839. . | 23-34-32 |
| 2093 842. . | 23-41-106 |
| 2093 843. . | 23-41-106 |
| 2093 866. . | 23-63-33 |
| 2093 867. . | 23-63-33 |
| 2093 925. . | 23-34-179 |
| 2093 942. . | 23-64-48 |
| 2093 943. . | 23-64-48 |
| 2093 945. . | 23-32-15 |
| 2093 950. . | 23-08-12 |
| 2093 964. . | 23-54-160 |
| 2093 981. . | 23-51-45 |
| 2094 012. . | 23-54-165 |
| 2094 016. . | 23-23-74 |
| 2094 017. . | 23-23-74 |
| 2094 018. . | 23-23-73 |
| 2094 019. . | 23-23-73 |
| 2094 055. . | 23-45-87 |
| 2094 060. . | 23-45-89 |
| 2094 063. . | 23-45-80 |
| 2094 067. . | 23-45-59 |
| 2094 069. . | 23-45-20 |
| 2094 082. . . | 8-56-30 |
| | 13-66-14 |
| 2094 083. . . | 8-56-30 |
| | 13-66-14 |
| 2094 094. . | 23-45-99 |
| 2094 095. . | 23-45-99 |
| 2094 098. . | 23-45-61 |
| 2094 103. . | 23-45-79 |
| 2094 107. . | 23-58-357 |
| 2094 112. . . | 23-09-2 |
| | 23-41-250 |
| 2094 119. . | 23-58-555 |
| 2094 122. . | 23-59-61 |



MyMopar.com

| PART NUMBER | CODE |
|---|---|
| 2094 123. . . | 23-59-61 |
| 2094 129. . . | 23-32-68 |
| 2094 130. . . | 23-48-121 |
| 2094 131. . . | 23-48-121 |
| 2094 134. . . | 23-59-56 |
| 2094 149. . . | 23-45-25 |
| 2094 150. . . | 23-45-91 |
| 2094 151. . . | 23-45-91 |
| 2094 154. . . | 23-42-38 |
| 2094 155. . . | 23-42-38 |
| 2094 156. . . | 23-42-57 |
| 2094 157. . . | 23-42-57 |
| 2094 167. . . | 23-45-11 |
| 2094 168. . . | 23-45-11 |
| 2094 186. . . | 23-14-47 |
| 2094 187. . . | 23-14-47 |
| 2094 197. . . | 23-45-77 |
| 2094 200. . . | 23-45-22 |
| 2094 201. . . | 23-45-22 |
| 2094 238. . . | 23-15-3 |
| 2094 239. . . | 23-15-3 |
| 2094 244. . . | 23-32-15 |
| 2094 276. . . | 23-20-24 |
| 2094 277. . . | 23-20-24 |
| 2094 278. . . | 23-45-79 |
| 2094 291. . . | 8-56-7 |
| 2094 300. . . | 23-45-95 |
| 2094 301. . . | 23-45-95 |
| 2094 303. . . | 23-45-96 |
| 2094 306. . . | 23-45-95 |
| 2094 307. . . | 23-45-95 |
| 2094 329. . . | 23-45-91 |
| 2094 330. . . | 23-63-126 |
| 2094 331. . . | 23-63-126 |
| 2094 334. . . | 23-63-126 |
| 2094 335. . . | 23-63-126 |
| 2094 396. . . | 23-45-102 |
| 2094 397. . . | 23-45-102 |
| 2094 400. . . | 23-45-100 |
| 2094 401. . . | 23-45-100 |
| 2094 404. . . | 23-45-101 |
| 2094 413. . . | 23-45-106 |
| 2094 414. . . | 23-45-105 |
| 2094 415. . . | 23-45-105 |
| 2094 422. . . | 23-41-29 |
| 2094 423. . . | 23-41-29 |
| 2094 434. . . | 23-45-103 |
| 2094 438. . . | 23-45-35 |
| 2094 439. . . | 23-45-35 |
| 2094 444. . . | 23-45-111 |
| 2094 445. . . | 23-45-110 |
| 2094 446. . . | 23-45-104 |
| 2094 449. . . | 23-22-80 |
| 2094 460. . . | 23-45-113 |
| 2094 462. . . | 23-64-242 |
| 2094 463. . . | 23-64-242 |
| 2094 466. . . | 23-58-486 |
| 2094 467. . . | 23-58-486 |
| 2094 472. . . | 23-58-486 |
| 2094 473. . . | 23-58-486 |
| 2094 484. . . | 23-63-33 |
| 2094 485. . . | 23-63-33 |
| 2094 500. . . | 23-63-15 |
| 2094 501. . . | 23-63-15 |
| 2094 559. . . | 23-58-237 |
| 2094 581. . . | 23-63-37 |
| 2094 595. . . | 23-32-15 |
| 2094 631. . . | 23-32-15 |
| 2094 648. . . | 23-63-21 |
| 2094 649. . . | 23-63-21 |
| 2094 655. . . | 23-45-101 |
| 2094 658. . . | 23-19-58 |
| 2094 745. . . | 23-58-3 |
| 2094 759. . . | 23-19-63 |
| 2094 870. . . | 23-63-33 |
| 2094 871. . . | 23-63-33 |
| 2094 874. . . | 23-40-187 |
| 2094 888. . . | 23-45-62 |
| 2094 896. . . | 23-45-43 |
| 2094 984. . . | 23-32-15 |
| 2094 985. . . | 23-32-15 |
| 2095 004. . . | 8-29-208 |
| 2095 008. . . | 8-29-153 |
| 2095 013. . . | 8-29-97 |
| 2095 037. . . | 8-29-133 |
| 2095 038. . . | 8-29-42 |
| 2095 054. . . | 8-27-1 |
| 2095 059. . . | 8-28-3 |
| 2095 065. . . | 8-27-1 |
| 2095 070. . . | 8-28-3 |
| 2095 072. . . | 8-28-3 |
| 2095 074. . . | 8-28-3 |
| 2095 075. . . | 8-28-3 |
| 2095 100. . . | 8-28-3 |
| 2095 182. . . | 8-29-155 |
| 2095 199. . . | 8-27-1 |
| 2095 241. . . | 8-29-136 |
| 2095 254. . . | 8-52-4 |
| 2095 270. . . | 8-27-1 |
| 2095 289. . . | 8-36-114 |
| 2095 300. . . | 8-28-3 |
| 2095 331. . . | 8-29-131 |
| 2095 332. . . | 8-29-131 |
| 2095 339. . . | 8-29-132 |
| 2095 341. . . | 8-28-74 |
| 2095 374. . . | 8-35-41 |
| 2095 417. . . | 8-28-3 |
| 2095 418. . . | 8-28-3 |
| 2095 427. . . | 8-29-98 |
| 2095 627. . . | 8-52-23 |
| 2095 653. . . | 8-29-154 |
| 2095 740. . . | 8-27-4 |
| 2095 784. . . | 8-27-138 |
| 2096 020. . . | 8-37-1 |
| 2096 021. . . | 8-37-316 |
| 2096 022. . . | 23-47-457 |
| 2096 038. . . | 1-88-1 |
| 2096 041. . . | 1-88-120 |
| 2096 043. . . | 1-88-107 |
| 2096 052. . . | 1-88-120 |
| 2096 053. . . | 1-88-6 |
| 2096 054. . . | 1-88-170 |
| 2096 055. . . | 1-88-107 |
| 2096 070. . . | 23-33-42 |
| | 24-28-78 |
| 2096 083. . . | 1-48-770 |
| 2096 084. . . | 24-24-150 |
| 2096 086. . . | 8-15-2 |
| 2096 089. . . | 23-41-170 |
| 2096 090. . . | 23-41-170 |
| 2096 095. . . | 8-37-136 |
| 2096 097. . . | 8-37-275 |
| 2096 109. . . | 24-28-366 |
| 2096 110. . . | 24-28-366 |
| 2096 111. . . | 24-28-366 |
| 2096 112. . . | 24-28-366 |
| 2096 113. . . | 24-28-366 |
| 2096 115. . . | 8-35-85 |
| 2096 127. . . | 8-34-178 |
| 2096 129. . . | 23-18-115 |
| 2096 140. . . | 8-57-79 |
| 2096 141. . . | 8-57-79 |
| 2096 155. . . | 8-35-85 |
| 2096 169. . . | 23-18-104 |
| | 23-41-174 |
| 2096 176. . . | 23-41-170 |
| 2096 177. . . | 23-41-170 |
| 2096 180. . . | 8-05-14 |
| 2096 181. . . | 8-05-20 |
| 2096 184. . . | 8-50-129 |
| 2096 204. . . | 1-88-1 |
| 2096 219. . . | 1-88-1 |
| 2096 231. . . | 1-82-14 |
| | 23-67-160 |
| 2096 237. . . | 8-37-410 |
| 2096 240. . . | 8-37-372 |
| 2096 241. . . | 8-37-372 |
| 2096 253. . . | 24-28-220 |
| 2096 255. . . | 24-01-18 |
| 2096 259. . . | 24-28-25 |
| 2096 277. . . | 8-37-411 |
| 2096 279. . . | 8-37-411 |
| 2096 284. . . | 8-37-411 |
| 2096 287. . . | 8-20-8 |
| 2096 302. . . | 8-15-7 |
| 2096 306. . . | 8-53-296 |
| 2096 309. . . | 1-48-191 |
| | 23-54-169 |
| | 23-58-534 |
| | 23-67-194 |
| | 24-24-20 |
| | 24-24-160 |
| 2096 314. . . | 1-82-14 |
| | 23-67-160 |
| 2096 317. . . | 8-35-85 |
| 2096 325. . . | 24-28-5 |
| | 24-28-220 |
| 2096 332. . . | 24-28-25 |
| 2096 337. . . | 8-15-4 |
| 2096 338. . . | 8-15-4 |
| 2096 367. . . | 8-50-83 |
| 2096 373. . . | 23-54-167 |
| | 23-58-532 |
| 2096 374. . . | 1-21-22 |
| 2096 375. . . | 1-48-300 |
| 2096 376. . . | 1-48-300 |
| 2096 381. . . | 23-67-195 |
| 2096 386. . . | 1-14-40 |
| 2096 389. . . | 8-39-3 |
| 2096 394. . . | 8-15-4 |
| 2096 395. . . | 8-15-4 |
| 2096 396. . . | 8-31-11 |
| 2096 398. . . | 23-18-103 |
| 2096 399. . . | 23-41-170 |
| 2096 400. . . | 8-15-4 |
| 2096 410. . . | 8-55-57 |
| 2096 444. . . | 23-41-55 |
| 2096 449. . . | 8-37-416 |
| 2096 499. . . | 8-05-12 |
| 2096 514. . . | 23-41-55 |
| 2096 515. . . | 23-41-55 |
| 2096 526. . . | 8-12-14 |
| | 8-31-2 |
| 2096 529. . . | 8-31-2 |
| 2096 539. . . | 8-19-25 |
| 2096 555. . . | 1-21-1 |
| 2096 556. . . | 1-21-1 |
| 2096 562. . . | 8-37-372 |
| 2096 563. . . | 8-37-372 |
| 2096 564. . . | 8-37-372 |
| 2096 566. . . | 8-37-399 |
| 2096 577. . . | 8-37-136 |
| 2096 578. . . | 8-37-275 |
| 2096 580. . . | 8-37-316 |
| 2096 581. . . | 8-37-1 |
| 2096 582. . . | 8-15-2 |
| 2096 586. . . | 1-48-10 |
| | 8-06-2 |
| | 24-24-166 |
| 2096 589. . . | 23-41-55 |
| 2096 590. . . | 23-41-55 |
| 2096 591. . . | 23-41-55 |
| 2096 594. . . | 1-49-1 |
| 2096 595. . . | 1-14-4 |
| 2096 597. . . | 8-20-10 |
| 2096 599. . . | 8-20-10 |
| 2096 623. . . | 1-82-44 |
| 2096 632. . . | 1-88-6 |
| 2096 633. . . | 1-12-1 |
| 2096 634. . . | 1-12-1 |
| 2096 648. . . | 8-56-34 |
| 2096 658. . . | 23-47-446 |
| 2096 661. . . | 8-15-4 |
| 2096 662. . . | 8-15-4 |
| 2096 686. . . | 1-82-25 |
| 2096 688. . . | 1-82-4 |
| 2096 712. . . | 8-19-25 |
| 2096 714. . . | 8-19-64 |
| 2096 715. . . | 24-28-78 |
| 2096 716. . . | 24-28-78 |
| 2096 733. . . | 8-37-504 |
| 2096 740. . . | 8-37-458 |
| 2096 765. . . | 23-41-170 |
| 2096 768. . . | 1-48-7 |
| 2096 772. . . | 1-48-268 |
| 2096 782. . . | 24-24-5 |
| 2096 786. . . | 23-41-55 |
| 2096 787. . . | 23-41-55 |
| 2096 788. . . | 23-41-55 |
| 2096 790. . . | 23-41-55 |
| 2096 791. . . | 23-41-55 |
| 2096 792. . . | 23-41-55 |
| 2096 799. . . | 1-48-7 |
| 2096 822. . . | 1-82-5 |
| 2096 857. . . | 1-13-9 |
| | 8-13-3 |
| 2096 858. . . | 24-24-156 |
| 2096 864. . . | 1-21-1 |
| 2096 865. . . | 24-24-156 |
| 2096 872. . . | 1-04-18 |
| 2096 873. . . | 8-15-7 |
| 2096 879. . . | 8-37-136 |
| 2096 881. . . | 8-37-275 |
| 2096 883. . . | 8-37-2 |
| 2096 889. . . | 8-15-7 |
| 2096 894. . . | 1-04-4 |
| 2096 899. . . | 1-04-6 |
| 2096 901. . . | 1-04-6 |
| 2096 905. . . | 23-18-111 |
| | 23-41-176 |
| | 23-54-173 |
| 2096 908. . . | 23-41-176 |
| 2096 911. . . | 23-41-176 |
| 2096 917. . . | 8-19-3 |
| 2096 926. . . | 1-19-1 |
| 2096 932. . . | 1-48-555 |
| 2096 938. . . | 8-56-34 |
| 2096 940. . . | 24-28-78 |
| 2096 954. . . | 8-37-508 |
| 2096 967. . . | 8-37-162 |
| 2096 968. . . | 8-37-162 |
| 2096 972. . . | 8-37-62 |
| 2096 973. . . | 8-37-62 |
| 2096 976. . . | 8-37-517 |
| 2096 988. . . | 23-67-160 |
| 2096 989. . . | 1-48-151 |
| | 24-28-132 |
| 2097 008. . . | 1-48-13 |
| | 24-24-166 |
| 2097 010. . . | 24-28-76 |
| 2097 045. . . | 23-54-167 |
| 2097 055. . . | 1-82-44 |
| 2097 100. . . | 24-24-159 |
| 2097 101. . . | 24-25-234 |
| 2097 102. . . | 24-25-157 |
| 2097 103. . . | 24-25-234 |



MyMopar.com

| PART NUMBER | CODE |
|---|---|
| 2097 105. . | 24-25-232 |
| 2097 106. . . | 24-25-20 |
| 2097 109. . | 24-25-233 |
| 2097 114. . . | 8-40-13 |
| 2097 124. . . | 21-84-1 |
| 2097 128. . . | 24-29-1 |
| 2097 140. . . . | 1-10-1 |
| 2097 141. . . . | 1-10-1 |
| 2097 142. . . . | 1-10-1 |
| 2097 143. . . . | 1-10-1 |
| 2097 144. . . . | 1-10-1 |
| 2097 145. . . . | 1-10-1 |
| 2097 146. . . . | 1-10-1 |
| 2097 147. . . . | 1-10-1 |
| 2097 148. . | 23-67-163 |
| 2097 150. . . . | 8-15-3 |
| 2097 152. . | 24-28-384 |
| 2097 183. . . | 1-82-14 |
| 2097 184. . . | 1-82-14 |
| 2097 225. . . . | 1-82-2 |
| 2097 226. . . | 1-48-299 |
| 2097 227. . . | 1-48-299 |
| 2097 228. . . | 1-48-299 |
| 2097 229. . . | 1-48-299 |
| 2097 230. . . | 1-48-299 |
| 2097 277. . . . | 1-06-1 |
| 2097 278. . . . | 1-06-1 |
| 2097 279. . . | 8-31-10 |
| 2097 300. . . . | 1-21-1 |
| 2097 301. . . | 1-49-10 |
| 2097 302. . . | 1-49-10 |
| 2097 303. . . . | 8-30-1 |
| | 8-34-220 |
| 2097 304. . . | 1-88-170 |
| 2097 310. . . | 1-88-117 |
| 2097 397. . . . | 1-88-6 |
| 2097 398. . . . | 1-88-6 |
| 2097 405. . . | 1-88-107 |
| 2097 413. . . . | 1-88-1 |
| 2097 416. . . | 1-48-137 |
| 2097 471. . . | 14-02-29 |
| | 14-02-38 |
| 2097 488. . . | 21-84-1 |
| 2097 503. . . | 8-53-317 |
| 2097 507. . . | 24-25-16 |
| 2097 510. . . . | 8-15-4 |
| 2097 533. . . . | 8-20-8 |
| 2097 550. . . | 1-88-169 |
| 2097 557. . . | 8-37-410 |
| 2097 558. . . | 8-37-410 |
| 2097 578. . . | 1-04-12 |
| 2097 625. . | 23-54-167 |
| 2097 626. . | 23-54-167 |
| 2097 628. . . | 8-35-59 |
| 2097 629. . . | 21-84-1 |
| 2097 630. . . | 21-84-4 |
| 2097 633. . . | 1-88-159 |
| 2097 730. . | 24-24-159 |
| 2097 732. . . . | 1-48-4 |
| 2097 774. . . . | 8-32-2 |
| 2097 813. . . . | 8-30-1 |
| 2097 814. . . . | 8-30-1 |
| 2097 815. . . | 1-82-28 |
| 2097 816. . . . | 8-30-1 |
| | 14-02-24 |
| | 15-14-20 |
| 2097 847. . . . | 8-15-7 |
| 2097 898. . . . | 8-32-2 |
| 2097 899. . . . | 8-32-2 |
| 2097 950. . . . | 8-32-2 |
| 2097 951. . . . | 8-32-2 |
| 2097 995. . | 24-25-232 |
| 2097 996. . . | 24-25-18 |
| 2120 012. . | 19-54-121 |
| 2120 018. . | 19-54-181 |
| 2120 019. . | 19-54-181 |
| 2120 045. . . . | 7-03-1 |
| 2120 048. . . | 14-30-1 |
| 2120 049. . . | 14-30-1 |
| 2120 050. . . | 14-30-1 |
| 2120 051. . . | 14-30-1 |
| 2120 052. . . | 14-30-1 |
| 2120 054. . . | 14-30-1 |
| 2120 058. . . . | 7-03-1 |
| 2120 064. . . | 14-30-1 |
| 2120 065. . . | 14-30-1 |
| 2120 130. . . | 7-02-16 |
| 2120 208. . . . | 7-02-1 |
| 2120 214. . . . | 7-14-5 |
| 2120 232. . . . | 9-64-5 |
| 2120 236. . . . | 9-64-5 |
| 2120 237. . . . | 9-64-5 |
| 2120 238. . . . | 9-64-5 |
| 2120 461. . . . | 9-41-4 |
| 2120 462. . . . | 9-41-4 |
| 2120 466. . . . | 9-07-5 |
| 2120 467. . . | 9-48-40 |
| 2120 468. . . | 9-48-40 |
| 2120 469. . . | 14-30-1 |
| 2120 470. . . | 14-39-45 |
| 2120 471. . . | 14-29-2 |
| 2120 472. . . | 14-29-5 |
| 2120 505. . . | 9-48-43 |
| 2120 510. . . | 7-02-16 |
| 2120 514. . . . | 9-42-1 |
| 2120 520. . . | 7-04-16 |
| 2120 527. . . | 19-54-29 |
| 2120 610. . . | 8-28-51 |
| 2120 612. . . | 8-28-51 |
| 2120 613. . . | 8-28-51 |
| 2120 617. . | 19-54-182 |
| 2120 627. . . . | 9-23-5 |
| 2120 630. . . . | 9-48-7 |
| 2120 633. . . | 14-29-2 |
| 2120 634. . . | 14-29-6 |
| 2120 694. . . . | 9-43-5 |
| 2120 738. . . | 14-30-1 |
| 2120 740. . . | 14-30-1 |
| 2120 764. . . | 10-22-11 |
| 2120 774. . . . | 9-07-5 |
| 2120 777. . . | 14-29-33 |
| 2120 866. . . | 10-26-12 |
| 2120 870. . . | 10-07-6 |
| 2120 877. . . | 14-11-3 |
| 2120 953. . . . | 9-13-5 |
| 2120 955. . . . | 7-46-1 |
| 2120 968. . . | 14-11-9 |
| 2120 980. . . | 14-11-9 |
| 2121 013. . . . | 7-02-1 |
| 2121 014. . . . | 7-02-1 |
| 2121 016. . . | 7-06-14 |
| 2121 159. . . | 14-11-9 |
| 2121 163. . . . | 8-52-5 |
| 2121 195. . . . | 9-45-2 |
| 2121 197. . . | 9-02-16 |
| 2121 198. . . | 9-02-16 |
| 2121 208. . . | 14-30-1 |
| 2121 209. . . | 14-30-1 |
| 2121 221. . . . | 7-03-1 |
| 2121 222. . . . | 7-03-1 |
| 2121 223. . . | 9-48-14 |
| 2121 236. . . . | 9-03-4 |
| 2121 244. . . | 9-03-29 |
| 2121 245. . . | 8-36-136 |
| 2121 404. . . | 10-07-11 |
| 2121 430. . . | 9-58-12 |
| 2121 455. . . . | 9-62-1 |
| 2121 467. . . | 14-11-1 |
| 2121 469. . . | 9-03-28 |
| 2121 473. . | 21-142-12 |
| 2121 505. . . | 14-30-1 |
| 2121 506. . . | 14-30-1 |
| 2121 524. . . . | 9-05-5 |
| 2121 554. . . . | 9-58-5 |
| 2121 559. . | 19-54-180 |
| 2121 571. . . | 14-13-3 |
| | 14-13-5 |
| 2121 572. . . | 14-13-3 |
| 2121 573. . . | 9-23-10 |
| | 10-24-23 |
| 2121 578. . . . | 9-39-5 |
| 2121 579. . . . | 9-39-5 |
| 2121 580. . . . | 9-39-5 |
| 2121 581. . . . | 9-39-6 |
| 2121 582. . . . | 9-39-6 |
| 2121 583. . . . | 9-39-6 |
| 2121 585. . . | 9-48-12 |
| 2121 600. . | 19-54-246 |
| 2121 707. . . | 10-24-4 |
| 2121 724. . . . | 7-07-1 |
| 2121 725. . . . | 9-16-6 |
| 2121 726. . . . | 9-16-6 |
| 2121 727. . . . | 9-16-6 |
| 2121 728. . . | 14-30-1 |
| 2121 745. . . | 14-14-3 |
| 2121 748. . . | 14-11-1 |
| 2121 793. . . . | 6-09-1 |
| 2121 794. . . . | 6-10-2 |
| 2121 880. . . . | 6-09-1 |
| 2121 908. . . . | 9-05-5 |
| 2121 915. . . | 14-11-1 |
| 2121 934. . . | 14-02-27 |
| 2121 935. . . | 14-02-7 |
| 2121 936. . . | 14-02-6 |
| 2121 942. . . | 1-82-48 |
| 2121 950. . . . | 9-45-1 |
| 2121 952. . . | 14-30-2 |
| 2121 953. . . | 14-30-2 |
| 2121 954. . . | 14-30-2 |
| 2121 955. . . | 14-39-45 |
| 2121 956. . . | 14-39-45 |
| 2121 957. . . | 14-39-45 |
| 2121 967. . . | 14-01-1 |
| 2122 016. . . | 19-15-3 |
| 2122 020. . . | 19-14-1 |
| 2122 029. . . . | 8-33-5 |
| 2122 030. . . | 8-33-20 |
| 2122 031. . . | 8-33-19 |
| 2122 032. . . | 19-01-8 |
| 2122 033. . . | 19-15-3 |
| 2122 038. . . | 19-46-16 |
| 2122 039. . . | 19-46-16 |
| 2122 043. . . | 19-30-4 |
| 2122 044. . . | 19-30-4 |
| 2122 045. . . | 19-30-4 |
| 2122 046. . . | 19-30-4 |
| 2122 047. . . | 19-30-4 |
| 2122 050. . . | 19-30-4 |
| 2122 054. . . | 19-30-7 |
| 2122 055. . . . | 8-33-4 |
| 2122 206. . . | 22-03-1 |
| 2122 207. . . | 22-03-1 |
| 2122 208. . . | 22-05-14 |
| 2122 209. . . | 22-05-14 |
| 2122 214. . . . | 4-03-8 |
| 2122 254. . . . | 6-14-1 |
| 2122 255. . . . | 6-14-1 |
| 2122 262. . . . | 6-14-4 |
| 2122 266. . . . | 5-47-7 |
| 2122 275. . . | 9-71-18 |
| 2122 276. . . | 5-39-24 |
| 2122 277. . . | 9-71-17 |
| 2122 278. . . | 9-71-16 |
| 2122 279. . . | 9-71-19 |
| 2122 280. . . | 9-71-15 |
| 2122 300. . . . | 5-28-8 |
| 2122 359. . . | 17-12-12 |
| 2122 433. . . | 22-01-5 |
| 2122 448. . . | 22-01-5 |
| 2122 453. . . | 22-01-5 |
| 2122 478. . . | 22-01-5 |
| 2122 530. . . | 22-01-42 |
| 2122 532. . . | 22-01-42 |
| 2122 534. . . | 22-01-42 |
| 2122 536. . . | 22-01-43 |
| 2122 537. . . | 22-01-42 |
| 2122 539. . . | 22-01-43 |
| 2122 540. . . | 22-01-42 |
| 2122 542. . . | 22-01-43 |
| 2122 543. . . | 22-01-53 |
| 2122 575. . . . | 9-69-4 |
| 2122 578. . . . | 9-69-4 |
| 2122 620. . . | 13-11-5 |
| 2122 621. . . | 13-11-5 |
| 2122 622. . . | 13-01-1 |
| 2122 623. . . | 13-01-1 |
| 2122 624. . . | 19-30-4 |
| 2122 625. . . | 19-30-4 |
| 2122 626. . . | 19-30-4 |
| 2122 628. . . | 19-30-4 |
| 2122 629. . . | 19-30-4 |
| 2122 630. . . | 19-30-4 |
| 2122 631. . . | 19-30-4 |
| 2122 632. . . | 19-30-4 |
| 2122 633. . . | 19-30-4 |
| 2122 634. . . | 21-30-6 |
| 2122 635. . . . | 8-33-4 |
| 2122 638. . . | 19-30-4 |
| 2122 639. . . | 19-30-4 |
| 2122 640. . . | 19-30-4 |
| 2122 642. . . | 19-30-4 |
| 2122 645. . . | 19-30-4 |
| 2122 646. . . | 19-30-4 |
| 2122 647. . . | 19-30-4 |
| 2122 648. . . | 19-30-4 |
| 2122 652. . . | 19-30-4 |
| 2122 653. . . | 19-30-4 |
| 2122 654. . . | 19-30-4 |
| 2122 655. . . | 19-30-4 |
| 2122 663. . . | 19-30-4 |
| 2122 664. . . | 19-30-4 |
| 2122 665. . . | 19-30-4 |
| 2122 666. . . | 19-30-4 |
| 2122 667. . . | 19-30-4 |
| 2122 668. . . . | 8-33-4 |
| 2122 669. . . | 19-30-4 |
| 2122 670. . . | 19-30-4 |
| 2122 672. . . | 19-30-4 |
| 2122 673. . . | 19-30-4 |
| 2122 674. . . | 19-30-4 |
| 2122 675. . . | 19-30-4 |
| 2122 676. . . | 19-30-4 |
| 2122 677. . . | 11-05-1 |
| 2122 680. . . | 11-05-9 |
| 2122 681. . . | 11-05-1 |
| 2122 685. . . | 11-08-24 |
| 2122 689. . . | 11-05-1 |
| 2122 692. . . | 11-05-1 |
| 2122 696. . . | 11-05-1 |
| 2122 702. . . | 11-05-1 |
| 2122 705. . . | 11-05-1 |
| 2122 708. . . | 11-05-1 |



MyMopar.com

| PART NUMBER | CODE |
|---|---|
| 2122 788. . . | 11-05-1 |
| 2122 790. . . | 11-05-1 |
| 2122 795. . . | 11-01-1 |
| 2122 796. . . | 11-02-4 |
| 2122 831. . . | 11-01-1 |
| 2122 833. . . | 11-01-1 |
| 2122 834. . . | 11-01-1 |
| 2122 835. . . | 11-01-1 |
| 2122 857. . . | 17-11-5 |
| 2122 969. . . . | 8-33-4 |
| 2122 972. . . . | 8-33-4 |
| 2122 977. . . | 19-46-10 |
| 2122 978. . . | 19-46-14 |
| 2122 979. . . | 19-46-23 |
| 2122 980. . . | 19-02-20 |
| 2122 991. . . | 19-14-1 |
| 2122 992. . | 21-30-107 |
| 2122 993. . | 21-30-107 |
| 2122 999. . . | 19-46-16 |
| 2123 000. . . | 19-46-16 |
| 2123 007. . . | 19-14-1 |
| 2123 009. . . | 19-14-1 |
| 2123 011. . . | 19-14-35 |
| 2123 012. . . | 19-46-26 |
| 2123 013. . . | 19-46-35 |
| 2123 017. . . | 19-46-55 |
| 2123 036. . . | 6-35-16 |
| 2123 040. . . | 5-100-2 |
| 2123 044. . . . | 6-13-1 |
| 2123 045. . . . | 6-13-1 |
| 2123 113. . . | 14-02-25 |
| 2123 126. . . | 14-02-25 |
| 2123 127. . . | 19-14-74 |
| 2123 129. . . | 19-46-24 |
| 2123 130. . . | 21-30-2 |
| 2123 137. . . | 19-14-1 |
| 2123 139. . . | 19-30-4 |
| 2123 140. . . | 19-30-4 |
| 2123 141. . . | 19-30-4 |
| 2123 142. . . | 19-30-4 |
| 2123 165. . . | 19-02-4 |
| 2123 169. . . | 19-19-19 |
| 2123 170. . . | 19-19-19 |
| 2123 177. . . | 19-14-1 |
| 2123 178. . . | 19-14-1 |
| 2123 184. . . | 13-72-1 |
| 2123 188. . . | 13-72-1 |
| 2123 193. . . | 13-72-1 |
| 2123 196. . . | 13-72-1 |
| 2123 198. . . | 13-72-1 |
| 2123 204. . . . | 5-58-1 |
| 2123 212. . . . | 5-57-2 |
| 2123 213. . . . | 5-57-2 |
| 2123 214. . . . | 5-57-2 |
| 2123 217. . . . | 5-58-1 |
| 2123 218. . . . | 5-58-1 |
| 2123 337. . . | 12-04-23 |
| 2123 341. . . . | 5-56-2 |
| | 14-90-1 |
| 2123 346. . . . | 9-69-4 |
| 2123 354. . . | 13-18-4 |
| 2123 390. . . | 13-01-1 |
| 2123 391. . . . | 3-01-1 |
| 2123 395. . . | 11-10-42 |
| 2123 396. . . | 11-10-42 |
| 2123 401. . . | 11-10-3 |
| 2123 421. . . | 11-09-3 |
| 2123 425. . . | 11-01-1 |
| 2123 433. . . | 11-10-3 |
| 2123 435. . . | 11-10-3 |
| 2123 438. . . | 11-10-3 |
| 2123 440. . . | 11-10-3 |
| 2123 442. . . | 11-10-3 |
| 2123 443. . . | 11-10-3 |
| 2123 446. . . | 11-10-3 |
| 2123 447. . . | 11-10-3 |
| 2123 456. . . | 11-10-3 |
| 2123 462. . . | 11-05-1 |
| 2123 469. . . | 11-05-4 |
| 2123 472. . . | 11-05-1 |
| 2123 475. . . | 11-05-1 |
| 2123 477. . . | 11-05-1 |
| 2123 479. . . | 11-05-1 |
| 2123 481. . . | 11-05-1 |
| 2123 485. . . | 11-05-4 |
| 2123 486. . . | 11-05-4 |
| 2123 491. . . | 11-05-4 |
| 2123 492. . . | 11-05-4 |
| 2123 494. . . | 11-08-4 |
| 2123 496. . . | 11-08-3 |
| 2123 517. . | 5-100-183 |
| 2123 620. . . | 14-86-1 |
| 2123 621. . . | 14-86-1 |
| 2123 622. . . | 14-86-1 |
| 2123 639. . . | 23-32-34 |
| 2123 640. . . | 14-86-58 |
| 2123 677. . . | 19-46-3 |
| 2123 678. . . | 19-46-5 |
| 2123 717. . . | 19-58-7 |
| 2123 718. . . | 19-58-7 |
| 2123 785. . . | 17-12-4 |
| 2123 826. . . | 13-72-1 |
| 2124 246. . | 21-139-68 |
| 2124 247. . . | 9-46-124 |
| | 21-131-35 |
| 2124 252. . | 21-138-15 |
| 2124 255. . | 21-137-202 |
| | 21-138-38 |
| 2124 256. . | 21-139-117 |
| 2124 257. . | 21-139-118 |
| 2124 258. . | 21-133-47 |
| 2124 259. . . | 21-42-23 |
| 2124 260. . . | 21-42-23 |
| 2124 271. . . | 21-03-1 |
| 2124 276. . . | 21-42-23 |
| 2124 278. . . | 21-42-23 |
| 2124 279. . . | 16-20-1 |
| 2124 281. . . | 21-04-1 |
| 2124 283. . . | 21-16-3 |
| 2124 284. . | 21-139-75 |
| 2124 285. . | 21-139-70 |
| 2124 328. . . | 21-85-56 |
| 2124 338. . | 21-119-19 |
| 2124 339. . | 21-119-15 |
| 2124 340. . | 21-139-150 |
| 2124 361. . . | 21-85-5 |
| 2124 365. . . | 21-09-2 |
| 2124 376. . . | 21-02-1 |
| 2124 377. . . | 21-02-1 |
| 2124 382. . | 21-139-79 |
| 2124 398. . . . | 9-46-4 |
| 2124 409. . . | 21-03-23 |
| 2124 410. . . | 21-03-23 |
| 2124 411. . . | 21-03-23 |
| 2124 441. . . | 21-02-1 |
| 2124 540. . . | 21-02-1 |
| 2124 552. . | 21-139-143 |
| 2124 579. . | 21-136-20 |
| 2124 581. . | 21-133-65 |
| 2124 595. . . | 21-136-5 |
| 2124 600. . | 21-118-55 |
| 2124 607. . . | 21-04-11 |
| 2124 662. . | 21-138-15 |
| 2124 663. . | 21-138-23 |
| 2124 697. . | 21-139-101 |
| 2124 705. . . | 9-46-130 |
| | 21-118-42 |
| 2124 715. . . | 21-02-6 |
| 2124 725. . . | 21-02-1 |
| 2124 875. . . | 21-09-2 |
| 2124 991. . | 21-133-39 |
| 2125 000. . . . | 9-46-4 |
| 2125 009. . . | 21-133-7 |
| 2125 010. . . | 21-133-5 |
| 2125 011. . . | 21-133-5 |
| 2125 012. . . | 21-133-5 |
| 2125 024. . | 21-138-21 |
| 2125 059. . . | 21-39-3 |
| 2125 075. . . | 21-02-1 |
| 2125 187. . | 21-133-17 |
| 2125 198. . | 21-133-15 |
| 2125 201. . . | 21-129-5 |
| 2125 239. . . | 21-04-2 |
| 2125 241. . . | 21-133-5 |
| 2125 242. . . | 21-133-7 |
| 2127 017. . . | 19-15-3 |
| 2127 157. . | 19-54-182 |
| 2127 159. . | 19-54-183 |
| 2128 275. . | 19-54-258 |
| 2128 285. . . | 8-52-39 |
| 2128 323. . | 19-54-115 |
| 2128 324. . | 19-54-115 |
| 2128 325. . | 19-54-123 |
| 2128 337. . . | 19-54-86 |
| 2128 338. . . | 19-54-86 |
| 2128 347. . . | 14-11-30 |
| 2128 348. . . . | 6-09-1 |
| | 6-10-2 |
| 2128 383. . . | 14-02-6 |
| 2128 404. . . | 9-03-28 |
| 2128 405. . . | 9-03-28 |
| 2128 407. . . | 9-03-29 |
| 2128 412. . . | 8-52-39 |
| 2128 413. . . | 14-30-1 |
| 2128 421. . . | 6-10-10 |
| 2128 424. . . | 10-03-4 |
| 2128 475. . . | 14-11-33 |
| 2128 479. . . . | 9-67-4 |
| 2128 493. . . | 8-28-36 |
| 2128 495. . . | 14-11-1 |
| 2128 500. . . | 14-11-38 |
| 2128 503. . . | 14-11-9 |
| 2128 505. . . | 14-11-9 |
| 2128 545. . . . | 7-06-1 |
| 2128 548. . . | 10-26-6 |
| 2128 549. . . | 14-02-22 |
| 2128 550. . . | 14-02-21 |
| 2128 553. . . . | 9-03-4 |
| 2128 555. . . . | 9-02-5 |
| 2128 556. . . . | 9-02-5 |
| 2128 564. . | 19-54-115 |
| 2128 565. . . | 8-28-36 |
| 2128 566. . . | 8-28-15 |
| 2128 568. . . | 10-02-15 |
| 2128 569. . . . | 9-07-8 |
| 2128 570. . . . | 7-06-1 |
| 2128 571. . . . | 9-64-5 |
| 2128 572. . . . | 9-64-5 |
| 2128 573. . . | 9-64-13 |
| 2128 575. . . | 10-23-7 |
| 2128 577. . | 19-54-115 |
| 2128 578. . . | 19-54-86 |
| 2128 587. . . . | 9-17-5 |
| 2128 589. . . . | 9-03-4 |
| 2128 620. . . | 8-28-36 |
| 2128 626. . . | 10-02-15 |
| 2128 632. . . | 8-28-15 |
| 2128 636. . . | 14-13-1 |
| 2128 644. . . . | 9-15-1 |
| 2128 655. . . | 8-35-41 |
| 2128 660. . . | 14-29-10 |
| 2128 663. . . | 19-54-2 |
| 2128 664. . . | 14-01-1 |
| 2128 668. . . | 9-01-24 |
| 2128 751. . . . | 7-03-1 |
| 2128 757. . . | 14-11-9 |
| 2128 761. . | 21-142-12 |
| 2128 762. . . | 14-50-25 |
| 2128 768. . . . | 9-45-1 |
| 2128 774. . . | 9-64-18 |
| 2128 775. . . | 9-64-17 |
| 2128 776. . . | 14-06-10 |
| 2128 777. . . | 14-11-28 |
| 2128 793. . . | 9-01-24 |
| 2128 794. . . | 9-01-24 |
| 2128 795. . . | 9-01-24 |
| 2128 805. . . | 14-29-2 |
| 2128 821. . . . | 9-67-4 |
| 2128 860. . . | 14-07-1 |
| 2128 933. . . . | 9-58-5 |
| 2128 935. . . | 9-64-22 |
| 2128 936. . . | 9-64-22 |
| 2128 943. . . | 9-64-22 |
| 2128 944. . . | 9-64-22 |
| 2128 977. . . | 9-39-14 |
| 2128 999. . . | 9-64-22 |
| 2129 000. . . | 14-29-10 |
| 2129 012. . . | 9-23-17 |
| 2129 024. . . | 10-26-27 |
| 2129 078. . . . | 7-03-1 |
| 2129 079. . . . | 7-03-1 |
| 2129 080. . . . | 7-03-1 |
| 2129 160. . . | 7-45-31 |
| 2129 177. . . | 14-30-1 |
| 2129 202. . . . | 9-17-5 |
| 2129 203. . . . | 9-15-1 |
| 2129 205. . . . | 7-41-4 |
| 2129 206. . . . | 7-41-4 |
| 2129 277. . . . | 7-03-1 |
| 2129 284. . . . | 7-03-1 |
| 2129 370. . . | 10-24-37 |
| 2129 383. . . | 14-29-2 |
| 2129 384. . . | 14-29-2 |
| 2129 562. . . | 14-29-12 |
| 2129 597. . . | 14-29-15 |
| 2129 611. . . | 14-11-18 |
| 2129 617. . . | 9-03-28 |
| 2129 668. . . | 14-06-10 |
| 2129 669. . . . | 6-13-1 |
| 2129 684. . | 19-54-132 |
| 2129 735. . . . | 9-07-5 |
| 2129 849. . . | 14-11-1 |
| 2129 855. . . | 14-11-9 |
| 2129 856. . . | 14-29-44 |
| 2129 861. . . | 14-06-1 |
| 2129 885. . . . | 6-10-2 |
| 2129 887. . . | 6-09-11 |
| 2129 903. . . | 9-01-24 |
| 2129 904. . . | 9-01-24 |
| 2129 963. . . | 10-24-38 |
| 2160 999. . . | 23-52-1 |
| 2161 001. . . | 23-33-56 |
| | 23-33-135 |
| 2161 002. . . | 23-06-17 |
| 2161 003. . . | 23-06-53 |
| 2161 004. . . | 23-06-53 |
| 2161 011. . . | 23-26-89 |
| 2161 012. . . | 23-26-87 |
| 2161 013. . . | 23-26-87 |
| 2161 014. . . | 23-26-87 |
| 2161 015. . . | 23-26-87 |
| 2161 016. . . | 23-26-87 |
| 2161 017. . . | 23-26-87 |
| 2161 018. . . | 23-26-87 |
| 2161 021. . . | 23-38-5 |
| 2161 022. . . | 23-38-5 |



MyMopar.com

| PART NUMBER | CODE |
|---|---|
| 2161 028. . | 23-02-105 |
| 2161 035. . | 23-02-107 |
| 2161 038. . . | 23-38-14 |
| 2161 040. . | 23-33-109 |
| 2161 041. . . | 23-38-9 |
| 2161 050. . . | 23-33-94 |
| 2161 057. . . | 23-45-17 |
| 2161 059. . . | 1-48-26 |
| 2161 070. . . | 23-26-55 |
| 2161 071. . . | 23-26-55 |
| 2161 079. . . . | 1-76-3 |
| | 23-21-3 |
| 2161 115. . . | 23-02-1 |
| | 23-02-105 |
| 2161 119. . . | 23-02-1 |
| 2161 217. . . | 23-06-15 |
| 2161 220. . . | 8-37-90 |
| 2161 261. . | 23-47-451 |
| 2161 290. . . | 15-14-20 |
| 2161 291. . . | 23-47-55 |
| 2161 293. . . | 23-21-27 |
| 2161 294. . . | 23-21-27 |
| 2161 307. . . . | 8-05-8 |
| 2161 308. . . . | 8-05-6 |
| 2161 316. . . | 8-05-32 |
| 2161 329. . . | 23-21-45 |
| 2161 331. . . | 23-45-75 |
| 2161 350. . . | 23-63-20 |
| 2161 351. . . | 23-63-20 |
| 2161 402. . . | 23-22-53 |
| 2161 403. . . | 23-22-53 |
| 2161 405. . . | 15-14-21 |
| 2161 406. . . | 15-14-21 |
| 2161 467. . . | 23-21-45 |
| 2161 469. . . | 23-06-15 |
| 2161 473. . . | 23-06-15 |
| 2161 503. . . | 8-35-111 |
| | 23-17-2 |
| 2161 522. . | 23-33-213 |
| | 23-33-240 |
| 2161 565. . | 23-31-119 |
| 2161 599. . . | 23-17-49 |
| 2161 609. . . | 23-21-14 |
| 2161 621. . . | 23-06-21 |
| 2161 633. . . | 23-33-10 |
| 2161 721. . . | 23-33-26 |
| 2161 723. . | 23-31-119 |
| 2161 724. . | 23-31-119 |
| 2161 726. . . | 19-46-2 |
| 2161 818. . . | 23-22-81 |
| 2162 116. . . | 23-06-10 |
| 2163 468. . . | 23-26-42 |
| 2163 469. . . | 23-26-42 |
| 2163 518. . . | 23-20-8 |
| 2163 519. . . | 23-20-8 |
| 2163 520. . . | 23-20-8 |
| 2163 522. . . | 23-20-8 |
| 2163 524. . . | 23-20-41 |
| 2163 525. . . | 23-20-41 |
| 2163 526. . . | 23-20-41 |
| 2163 527. . . | 23-20-41 |
| 2163 528. . . | 23-20-41 |
| 2163 606. . . | 23-20-11 |
| 2163 607. . . | 23-20-11 |
| 2163 608. . . | 23-20-11 |
| 2163 609. . . | 23-20-11 |
| 2163 700. . . | 23-20-41 |
| 2163 847. . . | 23-20-29 |
| 2163 900. . . . | 1-32-3 |
| 2163 901. . . . | 1-32-3 |
| 2163 903. . . . | 1-32-3 |
| 2163 919. . . | 23-20-41 |
| 2165 024. . . | 23-64-69 |
| 2165 224. . . | 23-18-13 |
| 2165 225. . . | 23-18-13 |
| 2165 226. . . | 23-18-13 |
| 2165 227. . . | 23-18-13 |
| 2165 232. . . | 23-18-13 |
| 2165 233. . . | 23-18-13 |
| 2165 236. . | 23-34-120 |
| 2165 237. . | 23-34-120 |
| 2165 240. . | 23-34-120 |
| 2165 241. . | 23-34-120 |
| 2165 245. . . | 23-19-89 |
| 2165 276. . . | 23-14-7 |
| 2165 277. . . | 23-14-7 |
| 2165 287. . . | 23-39-6 |
| 2165 294. . | 23-64-254 |
| | 23-64-299 |
| 2165 295. . | 23-64-254 |
| | 23-64-299 |
| 2165 304. . . | 23-63-33 |
| 2165 305. . . | 23-63-33 |
| 2165 326. . . | 23-11-1 |
| 2165 327. . . | 23-11-1 |
| 2165 338. . . | 23-11-1 |
| 2165 339. . . | 23-11-1 |
| 2165 341. . . | 23-14-7 |
| 2165 355. . . | 23-39-8 |
| 2165 356. . . | 23-19-52 |
| 2165 408. . . | 23-19-89 |
| 2165 460. . . | 23-22-86 |
| 2165 461. . . | 23-22-86 |
| 2165 468. . | 23-63-112 |
| 2165 484. . . | 23-63-33 |
| 2165 485. . . | 23-63-33 |
| 2165 488. . . | 23-63-33 |
| 2165 489. . . | 23-63-33 |
| 2165 492. . . | 23-42-16 |
| | 23-42-23 |
| | 23-42-38 |
| 2165 514. . | 23-64-314 |
| 2165 515. . | 23-64-314 |
| 2165 519. . . | 23-64-74 |
| 2165 551. . . | 15-03-5 |
| 2165 570. . . | 23-19-84 |
| 2165 571. . . | 23-19-84 |
| 2165 636. . . | 23-19-82 |
| 2165 637. . . | 23-19-82 |
| 2165 664. . . | 23-58-66 |
| 2165 667. . . | 23-14-24 |
| 2165 669. . . | 23-58-85 |
| 2165 680. . | 23-41-270 |
| 2165 681. . | 23-41-270 |
| 2165 686. . . | 23-19-8 |
| 2165 691. . | 23-61-116 |
| 2165 712. . . | 23-09-52 |
| 2165 713. . . | 23-09-52 |
| 2165 714. . . | 23-09-52 |
| 2165 715. . . | 23-09-52 |
| 2165 718. . | 23-41-270 |
| 2165 719. . | 23-41-270 |
| 2165 768. . . | 23-41-7 |
| 2165 867. . | 23-34-235 |
| 2165 872. . . | 12-02-5 |
| 2165 992. . . | 23-09-17 |
| 2166 034. . . | 23-09-16 |
| 2166 035. . . | 23-09-16 |
| 2166 049. . | 23-58-227 |
| 2166 338. . | 23-58-220 |
| 2166 340. . . | 23-23-41 |
| 2166 341. . . | 23-23-41 |
| 2166 418. . . | 23-22-9 |
| 2166 452. . . | 23-15-3 |
| 2166 453. . . | 23-15-3 |
| 2166 466. . . | 23-15-3 |
| 2166 467. . . | 23-15-3 |
| 2166 511. . . | 23-39-17 |
| 2166 616. . . | 23-64-47 |
| 2166 617. . . | 23-64-47 |
| 2166 618. . . | 23-64-47 |
| 2166 619. . . | 23-64-47 |
| 2166 680. . | 23-64-242 |
| 2166 681. . | 23-64-242 |
| 2168 877. . . | 24-28-3 |
| 2168 878. . . | 24-28-3 |
| 2168 879. . . | 24-28-3 |
| 2168 880. . . | 24-28-3 |
| 2169 672. . . | 23-20-29 |
| 2169 929. . | 23-33-132 |
| 2170 085. . | 23-04-229 |
| 2170 086. . | 23-04-229 |
| 2170 087. . | 23-04-229 |
| 2188 370. . . . | 8-55-8 |
| 2188 372. . . | 8-55-214 |
| 2188 373. . . | 8-55-214 |
| 2188 374. . . | 8-55-214 |
| 2188 375. . . | 23-23-41 |
| 2188 411. . | 23-45-112 |
| 2188 416. . | 23-34-100 |
| 2188 417. . | 23-34-100 |
| 2188 499. . | 23-34-174 |
| 2188 518. . | 23-45-102 |
| 2188 519. . | 23-45-102 |
| 2188 558. . | 23-45-112 |
| 2188 616. . | 23-48-105 |
| 2188 617. . | 23-48-105 |
| 2188 628. . . | 23-54-20 |
| 2188 836. . . | 23-54-20 |
| 2188 934. . . | 23-54-4 |
| 2188 935. . . | 23-54-4 |
| 2188 958. . . | 23-34-32 |
| 2188 985. . | 23-34-116 |
| 2189 128. . | 23-34-122 |
| 2189 129. . | 23-34-122 |
| 2192 110. . . | 23-26-23 |
| 2192 111. . . | 23-26-23 |
| 2192 112. . . | 23-26-23 |
| 2192 113. . . | 23-26-23 |
| 2192 114. . . | 23-26-23 |
| 2192 115. . . | 23-26-23 |
| 2192 116. . . | 23-26-23 |
| 2192 117. . . | 23-26-23 |
| 2192 118. . . | 23-26-23 |
| 2192 119. . . | 23-26-23 |
| 2192 120. . . | 23-26-23 |
| 2192 121. . . | 23-26-23 |
| 2192 122. . . | 23-26-23 |
| 2192 123. . . | 23-26-23 |
| 2192 124. . . | 23-26-23 |
| 2192 125. . . | 23-26-23 |
| 2192 126. . . | 23-26-23 |
| 2192 127. . . | 23-26-23 |
| 2192 128. . . | 23-26-47 |
| 2192 129. . . | 23-26-47 |
| 2192 130. . . | 23-26-47 |
| 2192 131. . . | 23-26-47 |
| 2192 408. . . | 23-20-41 |
| 2192 413. . . | 23-20-8 |
| 2192 630. . . | 23-20-29 |
| 2192 648. . . | 23-26-23 |
| 2192 649. . . | 23-26-23 |
| 2192 650. . . | 23-26-23 |
| 2192 651. . . | 23-26-23 |
| 2192 685. . . | 23-14-19 |
| 2194 109. . . | 23-26-23 |
| 2194 110. . . | 23-26-2 |
| 2195 733. . . | 23-39-53 |
| 2196 039. . . . | 9-35-1 |
| 2196 040. . . . | 9-35-1 |
| 2196 045. . . . | 9-01-5 |
| 2196 046. . . . | 9-39-1 |
| 2196 052. . . . | 8-36-1 |
| 2196 058. . . | 2-08-57 |
| 2196 059. . . | 2-10-55 |
| 2196 061. . . . | 6-01-3 |
| 2196 063. . . | 21-01-3 |
| 2196 069. . . | 21-01-3 |
| 2196 074. . . . | 9-58-1 |
| 2196 082. . . | 19-54-2 |
| 2196 086. . . . | 9-39-1 |
| 2196 087. . . . | 9-01-5 |
| 2196 100. . . | 23-23-42 |
| 2196 101. . . | 23-23-42 |
| 2196 102. . . | 23-23-42 |
| 2196 103. . . | 23-23-42 |
| 2196 104. . . | 23-23-42 |
| 2196 105. . . | 23-23-42 |
| 2196 106. . . | 23-23-24 |
| 2196 107. . | 23-19-114 |
| 2196 108. . | 23-19-114 |
| 2196 109. . . | 23-11-23 |
| 2196 114. . | 23-34-235 |
| 2196 115. . | 23-34-235 |
| 2196 116. . | 23-34-235 |
| 2196 117. . | 23-34-235 |
| 2196 118. . | 23-19-114 |
| 2196 119. . . | 23-23-64 |
| 2196 126. . | 23-34-238 |
| 2196 127. . | 23-34-238 |
| 2196 144. . . . | 1-08-1 |
| 2196 147. . . | 23-51-11 |
| 2196 148. . . | 23-54-11 |
| 2196 149. . . . | 7-17-1 |
| 2196 150. . . | 12-15-21 |
| 2196 151. . . | 12-15-21 |
| 2196 152. . . | 15-06-16 |
| 2196 153. . . | 15-06-16 |
| 2196 154. . . | 15-06-16 |
| 2196 155. . . | 15-06-16 |
| 2196 156. . . | 15-06-16 |
| 2196 157. . . | 15-06-16 |
| 2196 158. . . | 15-06-16 |
| 2196 159. . . | 15-06-16 |
| 2196 160. . . | 12-15-21 |
| 2196 161. . . | 12-15-21 |
| 2196 162. . . | 12-15-2 |
| 2196 163. . . | 12-15-2 |
| 2196 164. . . | 12-15-2 |
| 2196 165. . . | 12-15-2 |
| 2196 166. . . | 12-15-2 |
| 2196 167. . . | 12-15-2 |
| 2196 168. . . | 15-25-2 |
| 2196 169. . . | 15-25-2 |
| 2196 170. . . | 12-15-2 |
| 2196 171. . . | 12-15-2 |
| 2196 172. . . | 12-15-2 |
| 2196 173. . . | 12-15-2 |
| 2196 174. . . | 12-15-2 |
| 2196 175. . . | 12-15-2 |
| 2196 180. . . | 23-23-39 |
| 2196 181. . . | 23-23-39 |
| 2196 184. . | 23-34-240 |
| 2196 185. . | 23-34-240 |
| 2196 186. . . | 23-23-2 |
| 2196 187. . . | 23-23-2 |
| 2196 203. . . | 14-35-1 |
| 2196 204. . . | 14-30-8 |
| 2196 205. . . | 14-35-1 |
| 2196 207. . . | 14-30-8 |
| 2196 208. . . | 14-41-3 |
| 2196 209. . . | 14-30-7 |
| 2196 211. . . | 14-30-7 |



MyMopar.com

| PART NUMBER | CODE |
|---|---|
| 2196 212. . . | 14-30-7 |
| 2196 213. . . | 14-30-4 |
| 2196 214. . . | 14-41-3 |
| 2196 219. . . | 14-30-4 |
| 2196 221. . . | 14-30-7 |
| 2196 222. . . | 14-30-7 |
| 2196 226. . . | 14-30-11 |
| 2196 227. . . | 14-30-11 |
| 2196 230. . . | 14-30-11 |
| 2196 232. . . | 14-30-11 |
| 2196 233. . . | 14-30-11 |
| 2196 234. . . | 14-41-3 |
| 2196 252. . . | 23-23-42 |
| 2196 253. . . | 23-23-42 |
| 2196 255. . . | 23-21-3 |
| 2196 256. . . | 12-15-21 |
| 2196 258. . | 23-19-114 23-54-11 |
| 2196 259. . | 23-19-114 23-54-11 |
| 2196 260. . | 23-19-114 23-54-11 |
| 2196 261. . | 23-19-114 23-54-11 |
| 2196 262. . . | 23-23-30 |
| 2196 264. . . | 23-23-42 |
| 2196 265. . . | 23-23-42 |
| 2196 266. . . | 23-23-42 |
| 2196 267. . . | 23-23-42 |
| 2196 268. . | 23-34-307 |
| 2196 269. . | 23-34-307 |
| 2196 270. . . | 23-23-65 |
| 2196 271. . . | 23-23-65 |
| 2196 272. . . | 23-23-65 |
| 2196 273. . . | 23-23-65 |
| 2196 274. . . | 23-23-52 |
| 2196 275. . . | 23-23-52 |
| 2196 276. . . | 23-23-52 |
| 2196 277. . . | 23-23-52 |
| 2196 278. . . | 23-23-52 |
| 2196 279. . . | 23-23-52 |
| 2196 280. . . | 23-23-52 |
| 2196 281. . . | 23-23-52 |
| 2196 282. . . | 23-23-52 |
| 2196 283. . . | 23-23-52 |
| 2196 284. . . | 23-23-52 |
| 2196 285. . . | 23-23-52 |
| 2196 286. . . | 23-23-52 |
| 2196 287. . . | 23-23-52 |
| 2196 288. . . | 23-23-52 |
| 2196 289. . . | 23-23-52 |
| 2196 290. . . | 23-23-41 |
| 2196 291. . . | 23-23-41 |
| 2196 292. . . | 23-23-52 |
| 2196 293. . . | 23-23-52 |
| 2196 294. . | 23-34-240 |
| 2196 295. . | 23-34-240 |
| 2196 298. . | 23-34-334 |
| 2196 300. . . . | 1-06-2 |
| 2196 301. . . | 24-25-2 |
| 2196 304. . | 24-25-154 |
| 2196 306. . | 24-25-246 |
| 2196 312. . . | 8-33-164 |
| 2196 314. . . | 8-37-17 |
| 2196 315. . | 24-25-162 |
| 2196 316. . . | 8-35-22 |
| 2196 320. . . . | 8-27-1 |
| 2196 322. . . | 8-50-135 |
| 2196 323. . . | 8-52-120 |
| 2196 324. . . | 8-52-76 |
| 2196 325. . . | 8-52-80 |
| 2196 337. . . | 24-01-1 |
| 2196 338. . . | 24-01-5 |
| 2196 339. . . | 24-01-5 |
| 2196 341. . . | 24-28-36 |
| 2196 342. . | 23-41-106 |
| 2196 343. . | 23-41-106 |
| 2196 347. . . | 24-01-5 |
| 2196 349. . . | 24-01-5 |
| 2196 400. . | 23-34-240 |
| 2196 401. . | 23-34-240 |
| 2196 404. . | 23-34-334 |
| 2196 405. . | 23-34-334 |
| 2196 407. . . | 15-06-16 |
| 2196 408. . . | 15-06-16 |
| 2196 409. . . | 15-06-16 |
| 2196 410. . . | 15-06-16 |
| 2196 411. . . | 15-06-16 |
| 2196 412. . . | 12-15-21 |
| 2196 413. . . | 12-15-21 |
| 2196 414. . . | 12-15-23 |
| 2196 415. . . | 12-15-23 |
| 2196 416. . . | 23-23-86 |
| 2196 417. . . | 23-23-86 |
| 2196 420. . . | 15-06-3 |
| 2196 421. . . | 15-06-6 |
| 2196 422. . . | 12-15-21 |
| 2196 423. . . | 12-15-21 |
| 2196 424. . . | 12-15-2 |
| 2196 425. . . | 12-15-2 |
| 2196 426. . . | 12-15-2 |
| 2196 427. . . | 12-15-2 |
| 2196 428. . . | 12-15-9 |
| 2196 438. . . | 23-23-80 |
| 2196 439. . . | 23-23-80 |
| 2196 446. . . | 23-54-11 |
| 2196 452. . . . | 7-17-2 |
| 2196 453. . . . | 7-17-1 |
| 2196 458. . . | 23-23-61 |
| 2196 459. . . | 23-51-11 |
| 2196 460. . . | 23-23-61 |
| 2196 461. . . | 23-54-11 |
| 2196 462. . . | 23-23-60 |
| 2196 463. . . | 23-23-60 |
| 2196 464. . . | 23-23-60 |
| 2196 465. . . | 23-23-60 |
| 2196 466. . . | 23-23-60 |
| 2196 467. . | 23-54-146 |
| 2196 468. . . | 23-23-61 |
| 2196 469. . . | 23-54-11 |
| 2196 470. . . | 12-15-2 |
| 2196 471. . . | 12-15-2 |
| 2196 472. . . | 23-23-65 |
| 2196 473. . . | 23-23-65 |
| 2196 474. . . | 23-23-65 |
| 2196 475. . . | 23-23-65 |
| 2196 476. . . | 23-23-66 |
| 2196 477. . . | 23-23-65 |
| 2196 478. . . | 23-23-65 |
| 2196 479. . . | 23-34-85 |
| 2196 480. . . | 23-34-85 |
| 2196 481. . . | 23-23-65 |
| 2196 482. . . | 23-23-65 |
| 2196 483. . | 23-58-240 |
| 2196 484. . | 23-19-114 |
| 2196 485. . | 23-19-114 |
| 2196 486. . | 23-34-184 |
| 2196 487. . | 23-34-184 |
| 2196 488. . | 23-34-184 |
| 2196 489. . | 23-34-184 |
| 2196 490. . | 23-34-184 |
| 2196 491. . | 23-34-184 |
| 2196 492. . | 23-34-184 |
| 2196 493. . . | 23-19-45 |
| 2196 494. . . | 23-19-45 |
| 2196 495. . . . | 1-01-1 |
| 2196 500. . . | 12-15-21 |
| 2196 501. . . | 12-15-2 |
| 2196 502. . . | 12-15-2 |
| 2196 503. . . | 12-15-2 |
| 2196 504. . . | 12-15-2 |
| 2196 505. . . | 12-15-9 |
| 2196 506. . . | 12-15-9 |
| 2196 507. . . | 12-15-2 |
| 2196 508. . . | 12-15-2 |
| 2196 509. . | 23-19-114 |
| 2196 510. . | 23-19-114 |
| 2196 511. . | 23-19-114 |
| 2196 512. . | 23-19-114 |
| 2196 513. . | 23-19-114 |
| 2196 514. . . | 23-23-23 |
| 2196 515. . . | 23-19-11 |
| 2196 524. . . | 23-23-2 |
| 2196 525. . . | 23-23-2 |
| 2196 526. . . | 23-23-39 |
| 2196 527. . . | 23-23-39 |
| 2196 528. . | 23-34-240 |
| 2196 529. . | 23-34-240 |
| 2196 532. . . | 15-03-18 |
| 2196 533. . . | 15-03-19 |
| 2196 548. . . | 23-23-30 |
| 2196 549. . . | 23-23-23 |
| 2196 550. . . | 12-15-21 |
| 2196 551. . . | 12-15-21 |
| 2196 552. . . | 12-15-2 |
| 2196 554. . . | 12-15-2 |
| 2196 556. . . | 15-06-3 |
| 2196 557. . . | 12-15-21 |
| 2196 558. . . | 12-15-23 |
| 2196 559. . . | 12-15-9 |
| 2196 560. . . | 12-15-9 |
| 2196 561. . . | 12-15-2 |
| 2196 563. . . | 12-15-2 |
| 2196 565. . . | 12-15-2 |
| 2196 566. . . | 12-15-2 |
| 2196 567. . . | 12-15-2 |
| 2196 568. . . | 12-15-2 |
| 2196 572. . . . | 7-17-1 |
| 2196 573. . . . | 7-17-1 |
| 2196 575. . | 23-34-340 |
| 2196 599. . | 23-34-334 |
| 2196 635. . | 23-34-166 |
| 2196 650. . | 23-19-114 |
| 2196 655. . . | 23-23-23 |
| 2196 656. . . | 23-23-23 |
| 2196 657. . . | 23-23-23 |
| 2196 658. . . | 23-23-23 |
| 2196 659. . | 23-34-184 |
| 2196 661. . . | 23-19-57 |
| 2196 662. . . | 23-19-57 |
| 2196 663. . . | 23-19-45 |
| 2196 664. . . | 23-23-23 |
| 2196 665. . . | 23-23-42 |
| 2196 666. . . | 23-23-42 |
| 2196 667. . . | 23-23-42 |
| 2196 668. . . | 23-23-42 |
| 2196 669. . . | 23-63-55 |
| 2196 670. . . | 23-63-55 |
| 2196 671. . . | 23-63-55 |
| 2196 672. . . | 23-63-55 |
| 2196 673. . . | 23-23-65 |
| 2196 674. . . | 23-23-65 |
| 2196 680. . . | 23-23-2 |
| 2196 681. . . | 23-23-2 |
| 2196 682. . . | 23-23-41 |
| 2196 683. . . | 23-23-41 |
| 2196 684. . . | 23-23-49 |
| 2196 685. . . | 23-23-49 |
| 2196 686. . . | 23-23-32 |
| 2196 687. . . | 23-23-32 |
| 2196 688. . . | 23-23-52 |
| 2196 689. . . | 23-23-52 |
| 2196 690. . . | 23-23-52 |
| 2196 691. . . | 23-23-52 |
| 2196 692. . . | 23-23-42 |
| 2196 693. . . | 23-23-42 |
| 2196 694. . . | 23-23-42 |
| 2196 695. . . | 23-23-42 |
| 2196 696. . . | 23-23-42 |
| 2196 697. . . | 23-23-42 |
| 2196 698. . . | 23-23-42 |
| 2196 699. . . | 23-23-42 |
| 2196 707. . . | 15-25-2 |
| 2196 708. . . | 15-06-6 |
| 2196 709. . . | 15-25-2 |
| 2196 710. . . | 12-15-2 |
| 2196 711. . . | 12-15-2 |
| 2196 712. . . | 12-15-2 |
| 2196 713. . . | 12-15-2 |
| 2196 714. . . | 12-15-2 |
| 2196 715. . . | 12-15-2 |
| 2196 718. . . | 23-23-32 |
| 2196 719. . . | 23-23-32 |
| 2196 720. . . | 23-23-33 |
| 2196 721. . . | 23-23-33 |
| 2196 722. . . | 23-23-33 |
| 2196 723. . . | 23-23-33 |
| 2196 724. . | 23-34-334 |
| 2196 725. . | 23-34-334 |
| 2196 726. . . | 12-15-2 |
| 2196 727. . . | 12-15-2 |
| 2196 728. . . | 12-15-23 |
| 2196 729. . . | 12-15-2 |
| 2196 730. . . | 23-23-2 |
| 2196 731. . . | 23-23-2 |
| 2196 732. . . | 23-23-2 |
| 2196 733. . . | 23-23-2 |
| 2196 734. . . | 23-23-2 |
| 2196 735. . . | 23-23-2 |
| 2196 736. . . | 12-15-2 |
| 2196 737. . . | 12-15-2 |
| 2196 738. . . | 12-15-2 |
| 2196 739. . . | 12-15-21 |
| 2196 740. . . | 12-15-21 |
| 2196 741. . . | 12-15-21 |
| 2196 749. . . | 23-23-65 |
| 2196 750. . . . | 2-14-8 |
| 2196 751. . . . | 2-14-8 |
| 2196 752. . . . | 2-14-8 |
| 2196 753. . . . | 2-14-8 |
| 2196 754. . . . | 2-14-8 |
| 2196 755. . . . | 2-14-8 |
| 2196 771. . . . | 2-14-1 |
| 2196 772. . . . | 2-14-1 |
| 2196 773. . . . | 2-14-1 |
| 2196 774. . . . | 2-14-1 |
| 2196 789. . . | 17-11-3 |
| 2196 790. . . | 17-11-3 |
| 2196 792. . . | 17-11-3 |
| 2196 793. . . | 17-11-3 |
| 2196 795. . . | 21-118-6 |
| 2196 796. . . | 21-118-6 |
| 2196 800. . . | 23-23-42 |
| 2196 801. . . | 23-23-42 |
| 2196 802. . | 23-34-238 |
| 2196 803. . | 23-34-238 |
| 2196 804. . | 23-34-238 |
| 2196 805. . . | 23-19-11 |
| 2196 806. . . | 23-19-11 |
| 2196 808. . . | 23-23-52 |
| 2196 809. . . | 23-23-52 |



MyMopar.com

| PART NUMBER | CODE |
|---|---|
| 2196 810. . . | 23-23-52 |
| 2196 811. . . | 23-23-52 |
| 2196 812. . . | 23-23-52 |
| 2196 813. . | 23-34-334 |
| 2196 814. . . | 23-23-39 |
| 2196 815. . . | 23-23-39 |
| 2196 816. . . | 23-23-74 |
| 2196 817. . . | 23-23-74 |
| 2196 818. . | 23-34-240 |
| 2196 819. . | 23-34-240 |
| 2196 820. . . | 23-23-39 |
| 2196 821. . . | 23-23-39 |
| 2196 822. . . | 23-23-52 |
| 2196 823. . . | 23-23-52 |
| 2196 824. . . | 23-23-52 |
| 2196 825. . . | 23-23-52 |
| 2196 826. . . | 23-23-52 |
| 2196 827. . . | 23-23-52 |
| 2196 828. . . | 23-23-23 |
| 2196 829. . . | 23-23-23 |
| 2196 830. . . | 23-23-39 |
| 2196 831. . . | 23-23-39 |
| 2196 836. . | 12-15-21 |
| 2196 837. . | 23-19-114 |
| 2196 838. . . | 23-23-30 |
| 2196 839. . | 23-36-123 |
| 2196 840. . . | 12-15-21 |
| | 23-34-238 |
| 2196 867. . . | 12-15-21 |
| 2196 868. . . | 12-15-21 |
| 2196 869. . . | 12-15-21 |
| 2196 870. . . | 12-15-21 |
| 2196 871. . . | 12-15-21 |
| 2196 872. . | 23-34-334 |
| 2196 873. . . | 23-23-65 |
| 2196 874. . . | 23-23-2 |
| 2196 875. . . | 1-32-2 |
| 2196 876. . | 23-34-238 |
| 2196 884. . . | 12-15-2 |
| 2196 885. . . | 12-15-2 |
| 2196 895. . . | 1-45-1 |
| 2196 910. . . | 7-42-1 |
| 2196 995. . . | 19-01-3 |
| 2196 998. . . | 21-138-2 |
| 2197 001. . . | 1-48-886 |
| | 24-24-167 |
| 2197 003. . . | 8-56-2 |
| 2197 011. . . | 1-48-555 |
| 2197 020. . | 24-28-132 |
| 2197 075. . | 23-54-169 |
| | 23-58-534 |
| 2197 130. . . | 1-82-14 |
| 2197 131. . . | 24-29-1 |
| 2197 136. . . | 1-48-165 |
| | 1-87-52 |
| | 8-15-4 |
| | 24-24-11 |
| 2197 148. . . | 1-88-177 |
| 2197 164. . | 23-54-159 |
| 2197 170. . . | 8-50-126 |
| 2197 404. . | 23-41-170 |
| 2197 405. . . | 1-50-1 |
| 2197 452. . . | 1-48-258 |
| 2197 501. . | 23-58-543 |
| 2197 571. . . | 1-04-1 |
| 2197 650. . . | 1-82-44 |
| 2197 882. . . | 1-04-10 |
| 2197 883. . . | 1-04-6 |
| 2197 884. . . | 1-04-6 |
| 2197 896. . . | 24-01-33 |
| 2197 898. . . | 1-48-1 |
| 2197 899. . . | 1-48-138 |
| 2197 900. . . | 1-48-138 |
| 2197 902. . . | 1-48-555 |
| 2197 904. . . | 1-48-770 |
| 2197 906. . . | 1-48-599 |
| 2197 907. . . | 1-48-46 |
| 2197 908. . . | 1-48-88 |
| 2198 087. . . | 1-26-1 |
| | 14-02-1 |
| 2198 088. . . | 14-02-1 |
| 2198 105. . | 23-18-106 |
| 2198 113. . . | 21-85-9 |
| 2198 117. . . | 8-53-234 |
| 2198 194. . . | 14-02-29 |
| 2198 243. . . | 21-84-4 |
| 2198 264. . . | 8-15-2 |
| 2198 354. . . | 1-108-1 |
| 2198 571. . . | 8-37-178 |
| 2198 573. . . | 8-37-410 |
| 2198 575. . . | 8-37-136 |
| 2198 577. . . | 8-37-275 |
| 2198 579. . . | 8-37-316 |
| 2198 581. . . | 8-37-1 |
| 2198 585. . . | 8-50-175 |
| 2198 587. . . | 8-37-372 |
| 2198 588. . . | 8-37-372 |
| 2198 713. . . | 8-37-372 |
| 2198 714. . . | 8-37-372 |
| 2198 726. . . | 1-108-2 |
| 2198 727. . . | 1-108-2 |
| 2198 855. . . | 1-88-119 |
| 2200 022. . . | 6-13-1 |
| 2200 023. . . | 6-14-1 |
| 2200 024. . . | 9-69-28 |
| 2200 027. . . | 6-19-2 |
| 2200 028. . . | 6-24-1 |
| 2200 029. . . | 6-24-1 |
| 2200 050. . . | 6-14-10 |
| 2200 051. . . | 6-13-1 |
| 2200 058. . . | 5-31-12 |
| 2200 060. . . | 6-13-1 |
| 2200 061. . . | 6-13-1 |
| 2200 064. . . | 6-13-1 |
| 2200 122. . . | 5-03-5 |
| 2200 130. . . | 22-03-1 |
| 2200 131. . . | 22-03-1 |
| 2200 132. . . | 22-03-1 |
| 2200 133. . . | 22-03-1 |
| 2200 135. . . | 22-03-2 |
| 2200 134. . . | 22-03-2 |
| 2200 214. . . | 16-20-1 |
| 2200 219. . . | 16-02-1 |
| 2200 301. . . | 6-19-2 |
| 2200 302. . . | 6-27-5 |
| 2200 334. . . | 6-38-1 |
| 2200 335. . . | 6-38-1 |
| 2200 377. . . | 11-05-1 |
| 2200 379. . . | 11-05-1 |
| 2200 478. . . | 19-48-1 |
| 2200 479. . . | 19-48-1 |
| 2200 480. . . | 19-48-1 |
| 2200 481. . . | 19-48-1 |
| 2200 482. . . | 19-48-1 |
| 2200 483. . . | 19-48-1 |
| 2200 527. . . | 16-02-2 |
| 2200 532. . . | 16-02-1 |
| 2200 534. . . | 16-02-1 |
| 2200 560. . . | 19-58-14 |
| 2200 564. . . | 19-30-4 |
| 2200 565. . . | 19-30-4 |
| 2200 566. . . | 19-30-4 |
| 2200 567. . . | 19-30-4 |
| 2200 568. . . | 19-30-4 |
| 2200 576. . . | 19-58-7 |
| 2200 577. . . | 19-30-18 |
| 2200 639. . . | 4-25-4 |
| 2200 642. . . | 4-25-3 |
| 2200 685. . . | 13-54-11 |
| 2200 719. . . | 19-02-4 |
| 2200 721. . . | 19-14-35 |
| 2200 727. . . | 19-15-48 |
| 2200 730. . . | 19-15-47 |
| 2200 731. . . | 19-14-1 |
| 2200 738. . . | 19-31-2 |
| 2200 739. . . | 19-31-1 |
| 2200 740. . . | 19-31-1 |
| 2200 747. . . | 19-15-4 |
| 2200 748. . . | 19-15-4 |
| 2200 749. . . | 19-15-4 |
| 2200 801. . . | 13-11-5 |
| 2200 963. . . | 14-89-57 |
| 2201 012. . . | 13-17-3 |
| 2201 013. . . | 13-17-3 |
| 2201 014. . . | 13-17-3 |
| 2201 017. . . | 13-17-3 |
| 2201 218. . . | 6-09-1 |
| 2201 115. . . | 13-17-3 |
| 2201 195. . . | 6-39-2 |
| 2201 216. . . | 6-13-4 |
| 2201 217. . . | 6-09-1 |
| 2201 223. . . | 6-14-1 |
| 2201 225. . . | 19-15-20 |
| 2201 227. . . | 19-14-1 |
| 2201 228. . . | 19-14-1 |
| 2201 232. . . | 19-14-1 |
| 2201 234. . . | 19-14-57 |
| 2201 237. . . | 19-04-1 |
| 2201 258. . . | 19-46-9 |
| 2201 259. . . | 19-46-6 |
| 2201 260. . . | 19-46-11 |
| 2201 272. . . | 19-14-35 |
| 2201 333. . . | 19-15-12 |
| 2201 424. . . | 11-01-1 |
| 2201 454. . . | 4-25-4 |
| 2201 612. . . | 19-19-4 |
| 2201 620. . . | 19-01-12 |
| 2201 621. . . | 19-01-12 |
| 2201 622. . . | 19-01-8 |
| 2201 624. . . | 19-14-42 |
| 2201 764. . . | 19-58-7 |
| 2201 765. . . | 19-58-7 |
| 2202 428. . . | 14-11-18 |
| 2202 488. . . | 9-07-5 |
| 2202 790. . . | 14-11-9 |
| 2202 834. . . | 9-64-17 |
| 2203 024. . . | 7-07-1 |
| 2203 349. . . | 14-11-30 |
| 2204 317. . . | 13-11-5 |
| 2204 369. . | 21-133-65 |
| 2204 493. | 21-139-193 |
| 2204 547. | 21-139-108 |
| 2205 552. . . | 9-31-4 |
| 2205 836. . . | 9-03-28 |
| 2205 848. . . | 9-03-28 |
| 2206 120. . . | 9-50-3 |
| 2206 134. . . | 9-01-24 |
| 2206 204. . . | 14-06-1 |
| 2206 290. . . | 9-48-7 |
| 2206 633. . . | 1-07-1 |
| 2207 988. . . | 4-25-4 |
| 2208 004. . . | 4-25-4 |
| 2208 008. . . | 4-26-28 |
| 2209 156. . . | 21-84-1 |
| 2219 063. . | 24-26-100 |
| 2219 072. . . | 1-48-1 |
| 2219 073. . . | 1-48-1 |
| 2219 074. . . | 1-48-1 |
| 2219 075. . . | 1-48-1 |
| 2219 090. . . | 24-29-1 |
| 2240 192. . . | 21-01-3 |
| 2240 194. . . | 21-01-3 |
| 2240 235. . . | 14-86-35 |
| 2240 236. . . | 17-11-3 |
| 2240 237. . . | 17-11-3 |
| 2240 239. . . | 17-11-3 |
| 2240 240. . . | 17-11-3 |
| 2240 241. . . | 17-11-3 |
| 2240 251. . . | 8-29-100 |
| 2240 288. . . | 24-25-15 |
| 2240 301. . . | 9-46-4 |
| 2240 302. . . | 21-118-6 |
| 2240 353. . . | 17-23-3 |
| 2240 355. . . | 17-23-3 |
| 2240 356. . . | 17-23-3 |
| 2240 358. . . | 17-23-3 |
| 2240 359. . . | 17-23-3 |
| 2240 360. . . | 17-23-3 |
| 2240 361. . . | 17-23-3 |
| 2240 362. . . | 17-23-3 |
| 2240 383. . . | 21-133-4 |
| 2240 397. . . | 7-04-1 |
| 2240 401. . . | 14-30-8 |
| 2240 403. . . | 14-43-5 |
| 2240 410. . . | 14-30-8 |
| 2240 529. . . | 8-52-180 |
| 2240 602. . . | 19-02-4 |
| 2240 608. . . | 8-33-39 |
| 2240 612. . . | 16-20-1 |
| 2240 613. . . | 16-20-1 |
| 2240 631. . . | 19-48-7 |
| 2240 640. . . | 9-35-1 |
| 2240 644. . . | 17-12-4 |
| 2240 647. . . | 10-24-1 |
| 2240 731. . . | 8-56-36 |
| 2240 732. . . | 8-56-36 |
| 2240 749. . . | 8-52-135 |
| 2241 219. . . | 23-54-53 |
| 2241 393. . . | 23-38-12 |
| 2257 267. . . | 8-50-125 |
| 2257 297. . . | 8-37-2 |
| 2257 722. . . | 8-39-15 |
| 2257 744. . | 23-41-128 |
| 2258 284. . . | 8-17-2 |
| 2260 099. . . | 19-14-6 |
| 2260 484. . . | 19-15-48 |
| 2264 233. . . | 9-45-2 |
| 2275 037. . | 23-34-340 |
| 2275 038. . | 23-34-340 |
| 2275 039. . | 23-34-340 |
| 2275 040. . | 23-34-340 |
| 2275 141. . | 23-54-156 |
| 2275 230. . . | 8-53-265 |
| 2275 231. . . | 8-53-265 |
| 2275 234. . . | 8-53-265 |
| 2275 336. . . | 23-23-52 |
| 2275 387. . . | 9-09-2 |
| 2275 388. . . | 9-09-2 |
| 2275 389. . . | 9-09-2 |
| 2275 390. . . | 9-09-2 |
| 2275 391. . . | 9-09-2 |
| 2275 393. . . | 9-09-2 |
| 2275 392. . . | 9-09-2 |
| 2275 394. . . | 9-09-2 |
| 2275 395. . . | 9-09-2 |
| 2275 396. . . | 9-09-2 |
| 2275 397. . . | 9-09-2 |
| 2275 398. . . | 9-09-2 |
| 2275 508. . . | 2-14-3 |
| 2275 509. . . | 2-14-3 |
| 2275 510. . . | 2-14-3 |
| 2275 511. . . | 2-14-3 |



MyMopar.com

| PART NUMBER | CODE |
|---|---|
| 6000 000. . . | 23-23-65 |
| 6000 009. . . | 23-23-65 |
| 6000 020. . . | 12-15-21 |
| | 12-15-22 |
| | 12-15-23 |
| | 12-15-27 |
| | 15-06-3 |
| | 15-06-17 |
| | 23-34-238 |
| | 23-54-11 |
| | 23-54-96 |
| 6000 021. . | 23-34-240 |
| 6000 028. . . | 8-50-307 |
| | 23-23-39 |
| | 23-34-240 |
| 6000 037. . | 23-19-114 |
| 6000 041. . . | 14-02-61 |
| 6000 049. . . | 12-15-21 |
| 6000 050. . . | 12-15-21 |
| | 23-19-114 |
| | 23-34-334 |
| | 23-54-11 |
| 6000 094. . . | 23-18-23 |
| 6000 097. . | 23-48-149 |
| 6000 098. . | 23-58-606 |
| 6000 110. . . | 23-14-46 |
| 6000 116. . . | 23-14-52 |
| 6000 123. . . | 5-102-11 |
| | 5-105-1 |
| | 8-55-9 |
| | 15-11-64 |
| 6000 124. . . . | 8-55-9 |
| 6000 141. . . | 23-39-12 |
| | 23-41-62 |
| | 23-58-605 |
| 6000 143. . . | 23-64-34 |
| 6000 160. . . | 12-04-12 |
| | 23-04-4 |
| | 23-31-128 |
| | 23-32-14 |
| 6000 165. . . | 5-27-15 |
| 6000 176. . . | 1-82-45 |
| 6000 177. . . | 23-48-94 |
| 6000 211. . . | 23-39-11 |
| | 23-41-9 |
| 6000 243. . . | 23-47-35 |
| 6000 252. . . | 7-17-11 |
| 6000 305. . . | 23-39-53 |
| | 23-41-94 |
| 6000 319. . | 23-58-607 |
| 6000 320. . | 23-58-605 |
| 6000 332. . . | 22-20-89 |
| 6000 374. . | 23-64-247 |
| 6000 388. . | 23-58-335 |
| 6000 394. . . | 23-18-23 |
| 6000 433. . . | 23-23-49 |
| 6000 437. . . | 23-18-74 |
| 6000 442. . . | 12-15-8 |
| | 12-15-9 |
| 6000 490. . . | 12-15-21 |
| | 23-19-45 |
| | 23-19-114 |
| | 23-34-184 |
| | 23-54-11 |
| 6000 551. . . | 23-18-29 |
| 6000 594. . | 23-19-178 |
| 6000 616. . . | 23-23-24 |
| | 23-34-238 |
| 6000 680. . | 23-58-242 |
| 6000 681. . | 23-58-242 |
| 6000 685. . . | 23-23-65 |
| 6000 688. . . | 23-23-52 |
| 6000 689. . . | 23-23-52 |
| 6000 692. . . | 23-23-52 |
| 6000 693. . . | 23-23-52 |
| 6000 700. . . | 23-23-39 |
| 6000 701. . . | 23-23-39 |
| 6000 702. . . | 23-23-39 |
| 6000 704. . . | 23-39-36 |
| 6000 706. . . | 23-23-42 |
| 6000 709. . . | 23-23-30 |
| | 23-23-39 |
| 6000 710. . . | 12-12-2 |
| | 12-15-2 |
| | 12-15-8 |
| 6000 721. . . | 23-23-39 |
| | 23-23-52 |
| 6000 722. . . | 23-23-52 |
| 6000 732. . . | 12-15-2 |
| | 12-15-8 |
| | 23-23-2 |
| 6000 742. . . | 23-23-65 |
| 6000 752. . . | 23-11-23 |
| | 23-34-334 |
| 6000 756. . . | 12-15-8 |
| | 12-15-9 |
| 6000 773. . . | 23-23-52 |
| 6000 779. . | 23-34-245 |
| 6000 804. . . | 23-63-22 |
| 6000 862. . . | 23-23-39 |
| 6000 911. . . | 12-15-8 |
| 6000 931. . . | 12-15-8 |
| 6006 030. . | 23-34-334 |
| 6006 034. . | 23-33-111 |
| 6006 035. . . | 8-47-131 |
| | 23-36-123 |
| 6006 036. . | 24-24-158 |
| 6006 041. . . | 8-55-209 |
| 6006 052. . | 23-58-605 |
| 6006 056. . . | 23-54-32 |
| 6006 065. . . | 1-48-226 |
| | 23-41-129 |
| | 24-28-191 |
| | 24-28-204 |
| 6006 070. . | 23-54-154 |
| 6006 071. . . | 8-05-11 |
| 6006 079. . . | 24-28-45 |
| 6006 082. . . | 23-54-94 |
| | 23-64-13 |
| 6006 086. . . | 23-15-13 |
| 6006 093. . | 23-58-607 |
| 6006 104. . . | 23-63-16 |
| | 23-63-22 |
| 6006 119. . . | 8-21-11 |
| | 8-35-41 |
| 6006 120. . . | 23-67-19 |
| 6006 122. . . | 8-28-75 |
| 6006 130. . . | 12-15-8 |
| | 23-64-13 |
| 6006 172. . . | 23-39-6 |
| 6006 176. . . | 23-23-65 |
| 6006 200. . . | 23-23-52 |
| | 23-23-65 |
| 6006 201. . . | 23-23-52 |
| 6006 204. . | 23-58-605 |
| 6006 205. . | 23-58-607 |
| 6006 215. . . | 15-06-16 |
| | 15-06-17 |
| | 23-23-30 |
| | 23-34-334 |
| | 23-34-340 |
| 6006 216. . | 23-58-606 |
| 6006 221. . | 23-58-234 |
| 6006 222. . | 23-58-245 |
| 6006 223. . | 23-58-607 |
| 6006 224. . | 23-58-603 |
| 6006 226. . | 23-58-607 |
| 6006 227. . | 23-58-607 |
| 6006 228. . | 23-58-607 |
| 6006 229. . | 23-58-607 |
| 6006 230. . | 23-58-607 |
| 6006 231. . | 23-58-607 |
| 6006 235. . | 23-58-228 |
| 6006 237. . | 23-58-607 |
| 6006 239. . . | 23-39-11 |
| 6006 243. . | 23-19-178 |
| 6006 244. . | 23-64-247 |
| 6006 249. . | 23-41-129 |
| 6006 261. . . | 23-61-99 |
| 6006 264. . . | 15-06-6 |
| | 15-06-17 |
| | 23-11-23 |
| | 23-23-23 |
| | 23-34-340 |
| 6006 296. . | 23-64-275 |
| 6006 297. . . | 8-57-13 |
| 6006 301. . . | 23-23-42 |
| 6006 324. . . | 8-47-79 |
| 6006 338. . . | 23-23-65 |
| 6006 403. . . | 23-19-11 |
| 6006 408. . . | 23-64-41 |
| 6006 409. . | 23-64-275 |
| 6006 414. . . | 23-23-65 |
| 6006 416. . . | 8-55-209 |
| 6006 425. . . | 7-17-11 |
| | 8-56-13 |
| 6006 427. . . | 8-55-209 |
| 6006 428. . . | 23-19-45 |
| 6006 429. . . | 12-15-2 |
| | 12-15-8 |
| 6006 434. . . | 23-23-65 |
| 6006 441. . . | 23-23-61 |
| 6006 443. . . | 23-23-23 |
| 6006 444. . . | 23-23-42 |
| 6006 448. . . | 12-15-8 |
| 6006 449. . . | 23-23-2 |
| 6006 451. . . | 23-23-60 |
| 6006 456. . . | 13-66-28 |
| 6006 457. . . | 23-23-61 |
| 6006 458. . . | 23-23-61 |
| 6006 467. . . | 23-23-30 |
| 6006 468. . | 23-34-334 |
| 6006 469. . . | 23-23-32 |
| | 23-23-33 |
| 6006 470. . . | 12-15-2 |
| 6006 486. . . | 24-28-52 |
| 6006 490. . . | 23-23-42 |
| 6006 491. . . | 23-23-42 |
| 6006 493. . . | 8-56-41 |
| 6006 506. . . | 23-18-42 |
| 6006 512. . . | 23-64-83 |
| 6006 516. . . | 12-15-2 |
| | 12-15-8 |
| 6006 520. . . | 23-19-45 |
| 6006 522. . . | 23-19-89 |
| 6006 911. . . | 12-15-2 |
| 6008 012. . . | 23-33-94 |
| 6008 016. . . | 23-06-15 |
| 6008 017. . | 23-33-110 |
| 6008 027. . | 23-47-352 |
| 6008 030. . . | 23-33-94 |
| 6008 032. . | 23-22-160 |
| 6008 039. . . | 23-33-94 |
| 6008 051. . | 23-47-350 |
| 6008 070. . . | 14-02-10 |
| 6008 084. . . | 23-23-52 |
| 6008 109. . . | 23-31-36 |
| 6008 110. . | 23-47-427 |
| 6008 111. . . | 23-47-9 |
| 6008 126. . | 23-47-352 |
| 6008 128. . . | 23-06-49 |
| | 23-06-53 |
| 6008 144. . . | 1-48-709 |
| | 24-28-4 |
| 6008 145. . . | 1-48-709 |
| | 23-54-172 |
| | 24-28-4 |
| 6008 153. . . | 23-06-53 |
| 6008 157. . . | 24-28-9 |
| | 24-28-91 |
| 6008 189. . . | 23-33-84 |
| 6008 191. . . | 23-14-27 |
| 6008 198. . . | 23-33-84 |
| 6008 200. . . | 23-33-84 |
| 6008 203. . . | 23-06-15 |
| 6008 216. . | 23-47-196 |
| 6008 218. . . | 19-14-72 |
| 6008 220. . . | 23-47-9 |
| 6008 222. . . | 23-33-84 |
| 6008 223. . . | 23-22-13 |
| 6008 244. . . | 15-14-10 |
| 6008 245. . | 23-33-110 |
| 6010 006. . . | 7-08-16 |
| 6010 007. . . | 23-19-55 |
| 6010 017. . . | 12-04-12 |
| 6010 019. . . | 14-02-16 |
| | 15-19-4 |
| 6010 020. . . | 14-02-28 |
| | 15-25-18 |
| | 23-21-65 |
| | 23-47-458 |
| | 24-24-142 |
| 6010 023. . . | 12-15-21 |
| 6010 025. . . | 13-66-18 |
| 6010 029. . . | 12-15-2 |
| | 12-15-8 |
| 6010 031. . . | 12-02-5 |
| 6010 035. . . | 12-02-5 |
| 6010 036. . . | 12-01-12 |
| 6010 037. . . | 12-02-5 |
| 6010 038. . . | 12-01-16 |
| 6010 043. . . | 19-31-19 |
| 6010 046. . . | 23-23-2 |
| 6010 048. . | 23-54-146 |
| | 23-54-148 |
| 6010 060. . . | 7-26-17 |
| 6010 080. . . | 15-13-9 |
| 6010 093. . . | 12-15-2 |
| | 12-15-8 |
| | 13-64-144 |
| 6010 094. . . | 15-28-14 |
| | 24-28-4 |
| 6010 096. . . | 8-34-96 |
| 6010 105. . . | 12-04-12 |
| 6010 128. . . | 12-15-21 |
| | 12-15-22 |
| | 15-06-16 |
| | 15-06-17 |
| | 15-25-18 |
| | 23-33-111 |
| 6010 154. . . | 8-34-51 |
| 6010 155. . . | 6-35-18 |
| | 15-09-4 |
| 6010 174. . . | 12-15-21 |
| | 12-15-27 |
| | 23-19-114 |
| | 23-54-11 |
| | 23-54-96 |
| 6010 192. . . | 12-15-8 |
| 6010 203. . . | 7-16-62 |
| 6010 210. . . | 12-15-2 |
| | 12-15-8 |
| 6010 214. . . | 15-25-2 |
| | 15-25-18 |
| 6010 215. . . | 12-15-2 |
| | 12-15-8 |
| | 12-15-9 |
| 6010 216. . . | 12-15-2 |
| | 12-15-8 |



MyMopar.com

| PART NUMBER | CODE |
|---|---|
| 6010 217. . . | 12-15-2 |
| | 12-15-8 |
| | 15-25-2 |
| | 15-25-18 |
| 6010 218. . . | 12-15-2 |
| | 12-15-8 |
| 6010 219. . . | 12-15-2 |
| | 12-15-8 |
| 6010 226. . . | 7-17-11 |
| 6010 227. . . | 12-15-2 |
| | 12-15-8 |
| 6010 228. . . | 7-35-21 |
| 6010 230. . . | 15-28-14 |
| 6010 231. . . | 8-34-51 |
| 6012 008. . . . | 8-55-9 |
| | 13-64-151 |
| 6012 028. . . | 14-02-16 |
| 6012 031. . . | 2-08-55 |
| | 2-10-17 |
| | 23-41-130 |
| 6012 042. . . | 9-46-107 |
| 6012 049. . . | 8-47-15 |
| 6012 060. . . | 13-64-57 |
| 6012 065. . . | 11-10-8 |
| | 12-04-26 |
| 6012 068. . . | 12-04-12 |
| 6012 070. . . | 13-66-15 |
| 6012 072. . . | 19-48-20 |
| 6012 073. . . | 14-88-27 |
| 6012 077. . . | 12-04-6 |
| 6012 078. . . | 12-07-3 |
| 6012 080. . . | 12-04-12 |
| 6012 083. . . | 13-64-10 |
| 6012 087. . . | 12-04-12 |
| 6013 007. . . | 7-16-62 |
| | 15-03-18 |
| | 15-03-30 |
| 6013 066. . . | 12-15-2 |
| | 12-15-8 |
| | 12-15-9 |
| 6013 067. . | 19-54-119 |
| 6013 082. . | 23-33-111 |
| 6013 105. . . | 23-36-18 |
| 6013 114. . | 23-33-111 |
| 6015 005. . | 23-18-115 |
| 6015 014. . . | 24-28-22 |
| 6015 106. . | 23-18-109 |
| 6015 107. . | 23-18-109 |
| 6015 143. . | 24-28-361 |
| 6015 159. . . | 1-88-122 |
| | 8-50-191 |
| | 23-41-12 |
| | 23-54-177 |
| | 23-47-424 |
| 6016 005. . . | 23-45-56 |
| 6022 001. . . | 23-64-44 |
| 6022 003. . . | 23-38-4 |
| 6022 016. . . | 12-01-12 |
| 6022 032. . . . | 7-11-4 |
| | 7-35-12 |
| 6022 075. . . | 23-64-47 |
| 6022 085. . . | 7-31-15 |
| 6022 142. . . . | 8-56-4 |
| 6022 147. . . | 23-54-69 |
| 6022 151. . . | 23-38-24 |
| 6022 153. . | 23-48-116 |
| 6022 161. . . | 21-42-16 |
| 6022 169. . . | 23-58-66 |
| 6022 287. . . | 23-39-10 |
| 6022 377. . . | 8-29-194 |
| 6022 381. . . | 8-29-130 |
| 6022 583. . . | 21-138-7 |
| 9413 197. . . | 12-15-2 |
| 9413 199. . . | 8-55-209 |
| 9413 211. . . | 8-55-209 |
| 9413 264. . . | 8-55-209 |
| 9413 268. . . | 23-34-85 |
| 9413 273. . . | 23-26-41 |
| 9413 433. . | 23-34-240 |
| 9414 025. . . | 8-55-209 |
| 9414 078. . . | 23-23-80 |
| 9414 080. . . | 23-23-39 |
| | 23-34-240 |
| 9415 101. . | 23-45-115 |

## NOTES



MyMopar.com

| CODE | PART NAME AND DESCRIPTION | NO. OF CYL. | PLYMOUTH | DODGE | DESOTO | CHRYSLER AND IMPERIAL | PER CAR | PART NUMBER |
|---|---|---|---|---|---|---|---|---|

## NOTES



MyMopar.com

# VENDOR NUMBER CROSS REFERENCE LIST



| Auto-Lite Sales Part No. | Chrysler |
|---|---|
| **CONTACT SETS** | |
| 1-10 | 1879504 |
| 1-12 | 1109258 |
| 1-15 | 1394940 |
| 1-16 | 1879423 |
| 1-17 | 1879322 |
| 1-20 | 1879388 |
| 1-21 | 1343581 |
| 1-22 | 1274092 |
| 1-25 | 1843339 |
| 1-26 | 1658541 |
| 1-28 | 1658604 |
| 1-29 | 1663129 |
| 1-30 | 1663134 |
| 1-31 | 674236 |
| 1-32 | 1818568 |
| 1-33 | 1843370 |
| 1-40 | 2084077 |
| 1-41 | 2084076 |
| 1-42 | 2084639 |
| 1-43 | 2084080 |
| 1-44 | 2084075 |
| 1-45 | 2084074 |
| 1-46 | 2084078 |
| 1-47 | 2084079 |
| **CONDENSERS** | |
| 2-30 | 1818728 |
| 2-32 | 1818757 |
| 2-34 | 1881723 |
| **DISTRIBUTOR CAPS** | |
| 3-2 | 1126570 |
| 3-4 | 1343576 |
| 3-8 | 1658534 |
| 3-20 | 643687 |
| 3-21 | 652074 |
| 3-23 | 643822 |
| 3-24 | 1136522 |
| 3-26 | 641033 |
| 3-29 | 960552 |
| 3-37 | 2084677 |
| **DISTRIBUTOR ROTORS** | |
| 4-4 | 1343587 |
| 4-6 | 1530739 |
| 4-7 | 1658535 |
| 4-12 | 648434 |
| 4-15 | 643695 |
| 4-17 | 868096 |
| 4-18 | 641159 |
| 4-19 | 868095 |
| 4-20 | 960134 |
| **IGNITION COILS** | |
| 5-1 | 1818837 |
| 5-5 | 1818576 |
| 5-7 | 1627412 |
| 5-8 | 1818836 |
| 5-9 | 1818838 |
| 5-10 | 924053 |
| 5-26 | 1486147 |
| 5-46 | 1488209 |
| **VACUUM CHAMBERS** | |
| 6-6 | 1345474 |
| 6-7 | 1343590 |
| 6-8 | 1345473 |
| 6-9 | 1345383 |
| 6-15 | 1439671 |
| 6-16 | 1627234 |
| 6-17 | 1627262 |

| Auto-Lite Sales Part No. | Chrysler |
|---|---|
| **VACUUM CHAMBERS (Con't)** | |
| 6-18 | 1658620 |
| 6-19 | 1689773 |
| 6-20 | 1689765 |
| 6-21 | 1135574 |
| 6-29 | 1818569 |
| 6-32 | 1135576 |
| 6-34 | 1135577 |
| 6-36 | 1261011 |
| 6-42 | 1818648 |
| 6-44 | 1818642 |
| 6-46 | 1879283 |
| 6-47 | 1818652 |
| 6-49 | 1889539 |
| 6-50 | 1879314 |
| **BREAKER PLATES** | |
| 7-1 | 1089082 |
| 7-5 | 1308180 |
| 7-9 | 1752397 |
| 7-11 | 1692793 |
| 7-13 | 1658610 |
| 7-15 | 1663133 |
| 7-17 | 1658601 |
| 7-19 | 1663126 |
| 7-20 | 592475 |
| 7-21 | 921273 |
| 7-24 | 699295 |
| 7-25 | 959311 |
| 7-26 | 1089083 |
| 7-27 | 1195775 |
| 7-28 | 1274090 |
| 7-29 | 648408 |
| 7-30 | 592476 |
| 7-31 | 1138534 |
| 7-32 | 1311454 |
| 7-38 | 1818780 |
| 7-39 | 1843368 |
| 7-41 | 1843488 |
| 7-42 | 1843476 |
| 7-44 | 1818825 |
| 7-50 | 1843482 |
| 7-51 | 1843337 |
| 7-52 | 1843368 |
| **CIRCUIT BREAKERS** | |
| 9-4 | 628902 |
| **MISC. RELAYS** | |
| 9-20 | 1125916 |
| 9-22 | 1113099 |
| 9-23 | 1113084 |
| 9-24 | 1120526 |
| 9-25 | 1479522 |
| 9-26 | 1440445 |
| 9-28 | 1622221 |
| 9-29 | 1595341 |
| 9-30 | 1566372 |
| 9-31 | 1692684 |
| 9-32 | 1566350 |
| 9-33 | 1818856 |
| 9-35 | 1842546 |
| **ARMATURES (GEN.)** | |
| 10-6 | 671474 |
| 10-7 | 648398 |
| 10-8 | 671492 |
| 10-9 | 1112913 |
| 10-11 | 673015 |
| 10-14 | 861435 |

| Auto-Lite Sales Part No. | Chrysler |
|---|---|
| **ARMATURES (GEN.)(Con't)** | |
| 10-17 | 859900 |
| 10-18 | 596888 |
| 10-20 | 860922 |
| 10-21 | 1089591 |
| 10-23 | 1689799 |
| 10-24 | 1391249 |
| 10-25 | 1689780 |
| 10-26 | 1689801 |
| 10-27 | 1266528 |
| 10-28 | 1627214 |
| 10-29 | 1627248 |
| 10-31 | 1253360 |
| 10-32 | 1495573 |
| 10-33 | 1268226 |
| 10-34 | 1473060 |
| 10-35 | 1495554 |
| 10-36 | 1571493 |
| 10-37 | 1605559 |
| 10-38 | 1266499 |
| 10-39 | 1266526 |
| 10-40 | 1479690 |
| 10-41 | 1605568 |
| 10-42 | 1605563 |
| 10-45 | 1268129 |
| 10-46 | 1662234 |
| 10-47 | 1752520 |
| 10-51 | 1605561 |
| 10-53 | 1658523 |
| 10-54 | 1568079 |
| 10-55 | 1662175 |
| 10-57 | 1689793 |
| 10-58 | 1689803 |
| 10-59 | 1658608 |
| 10-60 | 1658617 |
| 10-61 | 1752289 |
| 10-62 | 1879571 |
| 10-63 | 1889350 |
| **BRUSH SETS (GEN.)** | |
| 11-5 | 1262923 |
| 11-8 | 689929 |
| 11-11 | 673032 |
| 11-12 | 960544 |
| 11-14 | 678489 |
| 11-15 | 1843156 |
| 11-17 | 689930 |
| 11-20 | 1483960 |
| 11-22 | 2084291 |
| 11-23 | 962885 |
| 11-25 | 1253341 |
| 11-26 | 1402558 |
| 11-27 | 1253367 |
| 11-28 | 1605565 |
| 11-29 | 1661748 |
| 11-30 | 1402500 |
| 11-32 | 1658521 |
| 11-33 | 1502235 |
| **C. E. HEAD (GEN.)** | |
| 12-2 | 1089587 |
| 12-3 | 1262932 |
| 12-6 | 1531558 |
| 12-7 | 860491 |
| 12-10 | 1689779 |
| 12-11 | 1501791 |
| 12-13 | 1627247 |
| 12-14 | 1495542 |
| 12-15 | 1473057 |
| 12-16 | 1495553 |
| 12-17 | 1605558 |
| 12-18 | 1384081 |

| Auto-Lite Sales Part No. | Chrysler |
|---|---|
| **C. E. HEAD (GEN.)(Con't)** | |
| 12-20 | 1473061 |
| 12-21 | 1505842 |
| 12-22 | 1507941 |
| 12-23 | 1605566 |
| 12-24 | 1658529 |
| 12-25 | 1658597 |
| 12-26 | 1658522 |
| 12-27 | 1658526 |
| 12-36 | 2084861 |
| **FIELD COIL (GEN.)** | |
| 13-2 | 853744 |
| 13-6 | 916566 |
| 13-7 | 858269 |
| 13-8 | 858271 |
| 13-9 | 860919 |
| 13-10 | 861432 |
| 13-11 | 1253328 |
| 13-12 | 1391246 |
| 13-13 | 1253347 |
| 13-14 | 1266492 |
| 13-15 | 1266527 |
| 13-16 | 1266493 |
| 13-19 | 1499170 |
| 13-21 | 1568078 |
| 13-22 | 1658520 |
| 13-23 | 1889352 |
| 13-32 | 2084860 |
| **D. E. HEAD (GEN.)** | |
| 14-4 | 860492 |
| 14-6 | 594372 |
| 14-7 | 1253338 |
| 14-8 | 1384050 |
| 14-10 | 1571464 |
| 14-11 | 1253361 |
| 14-12 | 1269227 |
| 14-13 | 1527964 |
| 14-14 | 1527960 |
| 14-15 | 1266501 |
| 14-16 | 1266500 |
| 14-17 | 1266519 |
| 14-19 | 1495496 |
| 14-20 | 1527938 |
| 14-21 | 1527968 |
| 14-22 | 1658531 |
| 14-23 | 1658524 |
| 14-24 | 1662174 |
| 14-25 | 1658527 |
| 14-27 | 1689791 |
| 14-28 | 1818581 |
| 14-29 | 1843161 |
| 14-30 | 1889234 |
| 14-31 | 1879569 |
| 14-32 | 1889351 |
| 14-34 | 1889385 |
| 14-39 | 2084852 |
| **SWITCHES** | |
| 15-5 | 1692658 |
| 15-6 | 1692659 |
| 15-7 | 648336 |
| 15-8 | 1121741 |
| 15-20 | 864888 |
| 15-21 | 871758 |
| 15-22 | 957467 |
| 15-23 | 1115382 |
| 15-24 | 1300507 |
| 15-25 | 1315970 |
| 15-27 | 1075941 |
| 15-28 | 1633166 |

MyMopar.com

# VENDOR NUMBER CROSS REFERENCE LIST

| Auto-Lite Sales Part No. | Chrysler |
|---|---|
| **SWITCHES (Con't)** | |
| 15-29 | 1523128 |
| 15-30 | 1383605 |
| 15-32 | 1605435 |
| 15-36 | 1495598 |
| 15-37 | 1343694 |
| 15-38 | 1529144 |
| 15-39 | 1517558 |
| 15-40 | 1343695 |
| 15-42 | 1498878 |
| 15-43 | 641462 |
| 15-44 | 1390061 |
| 15-57 | 1818738 |
| 15-58 | 1075543 |
| 15-59 | 1075942 |
| 15-60 | 1889797 |
| 15-63 | 2084439 |
| **ARMATURES (STARTER)** | |
| 16-8 | 641443 |
| 16-10 | 927079 |
| 16-15 | 1138524 |
| 16-16 | 1300505 |
| 16-17 | 1343705 |
| 16-19 | 1383849 |
| 16-21 | 1523306 |
| 16-25 | 1605585 |
| 16-44 | 687379 |
| 16-47 | 1123019 |
| 16-55 | 1752421 |
| 16-56 | 1752386 |
| 16-57 | 1752368 |
| 16-59 | 1889375 |
| 16-60 | 1843384 |
| 16-64 | 1843383 |
| 16-65 | 1843385 |
| 16-74 | 2084429 |
| 16-75 | 2084658 |
| **BRUSH SETS (STARTER)** | |
| 17-2 | 1195774 |
| 17-3 | 1614933 |
| 17-8 | 927909 |
| 17-9 | 1069966 |
| 17-11 | 927910 |
| 17-13 | 595319 |
| 17-20 | 1538343 |
| 17-21 | 1843135 |
| 17-24 | 1605587 |
| 17-25 | 1658581 |
| 17-26 | 1658552 |
| 17-33 | 1311457 |
| 17-34 | 1345005 |
| 17-39 | 2084661 |
| **STARTER CLUTCH** | |
| 18-2 | 1261401 |
| 18-3 | 1261402 |
| 18-4 | 1343708 |
| 18-6 | 1300522 |
| 18-9 | 1752374 |
| 18-10 | 1273427 |
| **C. E. HEADS (STARTER)** | |
| 19-4 | 641453 |
| 19-5 | 1123011 |
| 19-6 | 648340 |
| 19-7 | 636839 |
| 19-8 | 652102 |
| 19-10 | 1138525 |
| 19-12 | 1383848 |
| 19-15 | 1300516 |
| 19-16 | 1605584 |

| Auto-Lite Sales Part No. | Chrysler |
|---|---|
| **C. E. HEAD (STARTER) (Con't)** | |
| 19-17 | 1671301 |
| 19-19 | 1658554 |
| 19-28 | 1123018 |
| 19-32 | 1752366 |
| 19-38 | 2084662 |
| **FIELD COILS (STARTER)** | |
| 20-5 | 643827 |
| 20-6 | 930277 |
| 20-9 | 643830 |
| 20-10 | 643831 |
| 20-15 | 1752364 |
| 20-16 | 1300504 |
| 20-17 | 1752390 |
| 20-18 | 1665062 |
| 20-20 | 1300514 |
| 20-21 | 1300515 |
| 20-22 | 1265711 |
| 20-23 | 1300513 |
| 20-25 | 1605583 |
| 20-26 | 1658580 |
| 20-28 | 1658577 |
| 20-29 | 1658562 |
| 20-30 | 1662181 |
| 20-31 | 1658553 |
| 20-32 | 1879319 |
| 20-35 | 1123016 |
| 20-36 | 687372 |
| 20-37 | 927967 |
| 20-38 | 927968 |
| 20-39 | 1123017 |
| 20-43 | 1879574 |
| 20-50 | 1889614 |
| 20-53 | 2084660 |
| 20-54 | 2084668 |
| **PINION HOUSING** | |
| 21-10 | 927095 |
| 21-11 | 919950 |
| 21-17 | 1123012 |
| 21-28 | 1138528 |
| 21-29 | 1473339 |
| 21-30 | 1605551 |
| 21-31 | 1633168 |
| 21-32 | 1658556 |
| 21-33 | 1658558 |
| 21-35 | 1315966 |
| 21-38 | 1369646 |
| 21-39 | 1390063 |
| 21-40 | 1390064 |
| 21-42 | 1479104 |
| 21-44 | 1523305 |
| 21-45 | 1658575 |
| 21-47 | 1505929 |
| 21-48 | 1662224 |
| 21-50 | 1752388 |
| 21-58 | 1517559 |
| 21-59 | 1662167 |
| 21-61 | 1752392 |
| 21-62 | 1752377 |
| 21-63 | 1752380 |
| 21-64 | 1818744 |
| 21-67 | 1843320 |
| 21-68 | 1843321 |
| 21-71 | 1889376 |
| 21-74 | 1889262 |
| 21-91 | 1889796 |
| 21-93 | 2084436 |
| 21-94 | 2084431 |
| 21-96 | 2084663 |
| 21-97 | 2084669 |

| Auto-Lite Sales Part No. | Chrysler |
|---|---|
| **STARTER YOKE** | |
| 23-1 | 1300510 |
| 23-2 | 1343709 |
| 23-3 | 1523299 |
| 23-4 | 1390062 |
| 23-6 | 1752373 |
| **BEARINGS** | |
| 24-1 | 1752381 |
| 24-3 | 636804 |
| 24-4 | 1752378 |
| 24-5 | 1402563 |
| 24-6 | 1440349 |
| 24-8 | 643906 |
| 24-9 | 2084265 |
| 24-12 | 1614929 |
| 24-15 | 592564 |
| 24-17 | 927093 |
| 24-23 | 652115 |
| 24-28 | 636845 |
| **LEADS & CONNECTORS** | |
| 26-1 | 1818566 |
| 26-2 | 1818660 |
| 26-5 | 1343583 |
| 26-7 | 1343582 |
| 26-8 | 1495568 |
| 26-9 | 1401009 |
| 26-10 | 1383958 |
| 26-11 | 1527974 |
| 26-12 | 1383959 |
| 26-14 | 1658602 |
| 26-15 | 1261010 |
| 26-16 | 677206 |
| 26-17 | 677205 |
| 26-19 | 699307 |
| 26-24 | 683363 |
| 26-28 | 1879348 |
| 26-29 | 1818730 |
| 26-31 | 1879564 |
| **TRANSMISSION CONTROLS** | |
| 27-1 | 689882 |
| 27-2 | 1112508 |
| 27-3 | 1126633 |
| 27-6 | 1479737 |
| 27-7 | 1370204 |
| 27-8 | 1297999 |
| 27-15 | 1473102 |
| **DIST. SHAFT & GOV.** | |
| 28-2 | 1818563 |
| 28-3 | 1818574 |
| 28-5 | 1383947 |
| 28-6 | 1473064 |
| 28-7 | 1473687 |
| 28-8 | 1505931 |
| 28-9 | 1508428 |
| 28-10 | 1509681 |
| 28-13 | 677156 |
| 28-14 | 1566347 |
| 28-15 | 953715 |
| 28-16 | 1269131 |
| 28-17 | 1436974 |
| 28-18 | 1390543 |
| 28-19 | 599633 |
| 28-20 | 1436975 |
| 28-21 | 1390532 |
| 28-22 | 1501756 |
| 28-24 | 1843376 |
| 28-29 | 1509678 |
| 28-43 | 1394900 |

| Auto-Lite Sales Part No. | Chrysler |
|---|---|
| **DIST. SHAFT & GOV. (Con't)** | |
| 28-48 | 869138 |
| 28-55 | 1818641 |
| 28-56 | 1818665 |
| 28-57 | 1818820 |
| 28-58 | 1889395 |
| 28-59 | 1889397 |
| **CAM & STOP PLATE** | |
| 29-6 | 1089081 |
| 29-10 | 1627242 |
| 29-11 | 1479529 |
| 29-12 | 1505930 |
| 29-13 | 1571398 |
| 29-14 | 1508812 |
| 29-15 | 1509676 |
| 29-16 | 1660504 |
| 29-17 | 1627233 |
| 29-18 | 1627228 |
| 29-19 | 1627239 |
| 29-20 | 1660501 |
| 29-21 | 1627261 |
| 29-26 | 1658545 |
| 29-27 | 1658548 |
| 29-28 | 1658543 |
| 29-29 | 1689771 |
| 29-30 | 1689776 |
| 29-31 | 1658621 |
| 29-32 | 1689769 |
| 29-33 | 1663125 |
| 29-34 | 1663131 |
| 29-35 | 1663135 |
| 29-55 | 859904 |
| 29-56 | 1568075 |
| 29-57 | 859907 |
| 29-58 | 1136535 |
| 29-59 | 1343588 |
| 29-60 | 599126 |
| 29-61 | 1138512 |
| 29-62 | 1135596 |
| 29-64 | 959316 |
| 29-65 | 921275 |
| 29-66 | 861444 |
| 29-67 | 1818570 |
| 29-68 | 1818575 |
| 29-69 | 1818649 |
| 29-70 | 1818663 |
| 29-71 | 1818643 |
| 29-72 | 1818646 |
| 29-73 | 1752627 |
| 29-74 | 1818732 |
| 29-75 | 1818764 |
| 29-76 | 1818769 |
| 29-77 | 1752235 |
| 29-78 | 1843378 |
| 29-79 | 1879281 |
| 29-81 | 1879312 |
| **GEARS, COLLARS, COUPLINGS** | |
| 30-1 | 1594973 |
| 30-2 | 1300635 |
| 30-3 | 1262345 |
| 30-4 | 1262346 |
| 30-5 | 1265717 |
| 30-6 | 1540105 |
| 30-7 | 1540104 |
| 30-8 | 1818685 |
| **MISC. DISTRIBUTOR PARTS** | |
| 31-1 | 1235421 |
| 31-2 | 953717 |
| 31-5 | 1089090 |


MyMopar.com

Printed in U.S.A.

# VENDOR NUMBER CROSS REFERENCE LIST



| Auto-Lite Sales Part No. | Chrysler |
|---|---|
| **MISC. DIST. PARTS (Con't)** | |
| 31-6 | 1195769 |
| 31-7 | 1195770 |
| 31-8 | 1343585 |
| 31-9 | 1343591 |
| 31-10 | 1345705 |
| 31-11 | 1383641 |
| 31-12 | 1274087 |
| 31-13 | 1274088 |
| 31-14 | 1383953 |
| 31-15 | 1383954 |
| 31-16 | 1383946 |
| 31-17 | 643915 |
| 31-18 | 643892 |
| 31-19 | 960546 |
| 31-21 | 643896 |
| 31-22 | 643989 |
| 31-23 | 643893 |
| 31-24 | 643907 |
| 31-25 | 648400 |
| 31-26 | 648401 |
| 31-27 | 648404 |
| 31-28 | 1089084 |
| 31-29 | 1343594 |
| 31-30 | 1473688 |
| 31-31 | 643899 |
| 31-32 | 1407579 |
| 31-33 | 960548 |
| 31-34 | 1369774 |
| 31-35 | 643901 |
| 31-36 | 648246 |
| 31-37 | 648029 |
| 31-38 | 859903 |
| 31-39 | 958177 |
| 31-42 | 636899 |
| 31-43 | 691707 |
| 31-44 | 691709 |
| 31-45 | 691708 |
| 31-46 | 691710 |
| 31-47 | 1689788 |
| 31-48 | 1195772 |
| **MISC. IGNITION PARTS** | |
| 32-1 | 1688207 |
| 32-3 | 1818729 |
| 32-6 | 1818839 |
| 32-7 | 867119 |
| 32-9 | 920368 |
| 32-14 | 1842000 |
| **MISC. REGULATOR PARTS** | |
| 33-1 | 126049 |
| 33-3 | 1394893 |
| 33-4 | 928551 |
| **PULLEY FANS** | |
| 34-1 | 1370320 |
| 34-2 | 1383658 |
| 34-5 | 1479176 |
| 34-6 | 1479182 |
| 34-8 | 1479852 |
| 34-9 | 1479853 |
| 34-10 | 1495318 |
| 34-13 | 1540846 |
| 34-14 | 1505368 |
| 34-15 | 1505907 |
| 34-16 | 1505916 |
| 34-19 | 1565346 |
| 34-20 | 1565347 |
| 34-21 | 1565785 |
| 34-22 | 1565881 |
| 34-23 | 1565888 |
| 34-24 | 1565886 |

| Auto-Lite Sales Part No. | Chrysler |
|---|---|
| **PULLEY FANS (Con't)** | |
| 34-25 | 1565890 |
| 34-27 | 1507931 |
| 34-28 | 1508413 |
| 34-39 | 1540847 |
| 34-40 | 1889371 |
| 34-41 | 1889373 |
| 34-42 | 1540845 |
| 34-43 | 1889372 |
| 34-48 | 1922614 |
| 34-49 | 1922613 |
| 34-55 | 1263560 |
| 34-56 | 1194599 |
| 34-59 | 1136932 |
| 34-60 | 1126616 |
| 34-61 | 1263488 |
| 34-62 | 1264952 |
| 34-63 | 1319434 |
| 34-65 | 1320117 |
| 34-66 | 1264986 |
| 34-67 | 1889398 |
| **MISC. GENERATOR PARTS** | |
| 35-1 | 113702 |
| 35-2 | 1274093 |
| 35-4 | 674927 |
| 35-5 | 1253349 |
| 35-6 | 674930 |
| 35-7 | 671477 |
| 35-8 | 636796 |
| 35-9 | 636800 |
| 35-10 | 648392 |
| 35-11 | 674939 |
| 35-12 | 40654 |
| 35-13 | 1253362 |
| 35-14 | 671481 |
| 35-15 | 695627 |
| 35-16 | 674936 |
| 35-17 | 673014 |
| 35-18 | 683358 |
| 35-19 | 683357 |
| 35-20 | 1138481 |
| 35-21 | 636815 |
| 35-22 | 1266520 |
| 35-23 | 1253348 |
| 35-24 | 1253344 |
| 35-25 | 1253346 |
| 35-26 | 1266497 |
| 35-27 | 1627277 |
| 35-28 | 859901 |
| 35-29 | 636810 |
| 35-30 | 674943 |
| **MISC. PARTS (STARTER)** | |
| 36-3 | 1532985 |
| 36-4 | 927092 |
| 36-5 | 1121742 |
| 36-6 | 1266543 |
| 36-7 | 1121743 |
| 36-8 | 1138526 |
| 36-10 | 641445 |
| 36-13 | 636840 |
| 36-14 | 648387 |
| 36-18 | 636825 |
| 36-19 | 1501797 |
| 36-21 | 636817 |
| 36-22 | 1343710 |
| 36-23 | 1369645 |
| 36-25 | 1671288 |
| 36-26 | 1343706 |
| 36-27 | 1273430 |
| 36-28 | 1752360 |
| 36-29 | 1752361 |

| Auto-Lite Sales Part No. | Chrysler |
|---|---|
| **MISC. PARTS (STARTER)(Con't)** | |
| 36-30 | 641444 |
| 36-32 | 687366 |
| 36-33 | 120393 |
| 36-34 | 1123014 |
| 36-35 | 641446 |
| 36-36 | 672641 |
| 36-37 | 1383663 |
| 36-38 | 1818777 |
| **MISC. PARTS (SWITCHES)** | |
| 37-1 | 652122 |
| 37-6 | 636884 |
| 37-7 | 861499 |
| 37-8 | 636863 |
| 37-9 | 861500 |
| **WIPER MOTORS** | |
| 38-1 | 1505322 |
| 38-3 | 1568077 |
| 38-4 | 1622403 |
| 38-5 | 1595003 |
| 38-7 | 1627384 |
| 38-9 | 1627380 |
| 38-12 | 974467 |
| 38-13 | 1239453 |
| 38-14 | 1261499 |
| 38-15 | 1261498 |
| 38-16 | 1495163 |
| 38-17 | 1788676 |
| 38-18 | 1788675 |
| **MISC. WIPER PARTS** | |
| 39-1 | 1704421 |
| 39-3 | 1505326 |
| 39-4 | 1568051 |
| 39-5 | 1879600 |
| 39-6 | 1568050 |
| 39-12 | 1622012 |
| 39-13 | 1622011 |
| 39-14 | 1658486 |
| 39-16 | 1622436 |
| 39-17 | 1879341 |
| 39-18 | 1704072 |
| 39-19 | 1704744 |
| 39-20 | 1704068 |
| 39-21 | 1704067 |
| 39-22 | 1770698 |
| 39-23 | 1605601 |
| 39-24 | 1605610 |
| 39-25 | 1605609 |
| 39-26 | 1622010 |
| 39-27 | 1622009 |
| 39-28 | 1648064 |
| 39-30 | 1605425 |
| 39-31 | 1658757 |
| 39-33 | 1704711 |
| 39-34 | 1770870 |
| 39-35 | 1658349 |
| 39-36 | 1658348 |
| 39-38 | 1658420 |
| 39-42 | 1770707 |
| 39-43 | 1818890 |
| 39-45 | 1261446 |
| 39-46 | 1261447 |
| 39-47 | 1263468 |
| 39-48 | 1263469 |
| 39-49 | 1886203 |
| 39-50 | 1370004 |
| 39-51 | 1370010 |
| 39-52 | 1370009 |
| 39-53 | 1479946 |
| 39-55 | 1540465 |

| Auto-Lite Sales Part No. | Chrysler |
|---|---|
| **MISC. WIPER PARTS (Con't)** | |
| 39-56 | 1540520 |
| 39-57 | 1838291 |
| 39-58 | 1842407 |
| 39-59 | 1838292 |
| 39-60 | 1841680 |
| 39-61 | 1841679 |
| 39-62 | 1886222 |
| 39-63 | 1886224 |
| 39-64 | 1838935 |
| 39-65 | 1838934 |
| 39-66 | 1838936 |
| 39-68 | 1233532 |
| 39-69 | 837999 |
| **SMALL MOTORS** | |
| 40-1 | 1603324 |
| 40-3 | 1605379 |
| 40-4 | 1622498 |
| 40-5 | 1626847 |
| 40-6 | 1642435 |
| 40-7 | 1642434 |
| 40-8 | 1436729 |
| 40-9 | 1495282 |
| 40-10 | 1879579 |
| **MISC. ARMATURES** | |
| 41-1 | 1605570 |
| 41-2 | 1605593 |
| 41-3 | 1605597 |
| 41-4 | 1658583 |
| 41-5 | 1658586 |
| 41-6 | 1605576 |
| 41-10 | 1658592 |
| 41-11 | 1752653 |
| 41-12 | 1300634 |
| 41-13 | 1262365 |
| 41-14 | 1479685 |
| 41-15 | 1818813 |
| 41-16 | 1818878 |
| 41-17 | 1818879 |
| 41-19 | 1627272 |
| **MISC. BRUSHES** | |
| 42-1 | 866773 |
| 42-2 | 1605594 |
| 42-4 | 1658585 |
| 42-5 | 1605573 |
| 42-6 | 1627271 |
| 42-7 | 1265745 |
| 42-8 | 860937 |
| 42-10 | 958163 |
| 42-11 | 1308473 |
| 42-13 | 1752517 |
| **MISC. HARDWARE ITEMS** | |
| 43-1 | 120614 |
| 43-2 | 43761 |
| 43-3 | 120391 |
| 43-4 | 131094 |
| 43-5 | 131095 |
| 43-6 | 131096 |
| 43-7 | 131098 |
| 43-8 | 103905 |
| 43-9 | 106750 |
| 43-10 | 122159 |
| 43-11 | 132900 |
| 43-12 | 121540 |
| 43-13 | 131015 |
| 43-14 | 111873 |
| 43-15 | 132930 |
| 43-16 | 134566 |

MyMopar.com

# VENDOR NUMBER CROSS REFERENCE LIST

| Auto-Lite Sales Part No. | Chrysler |
|---|---|
| **MISC. HARDWARE ITEMS (Con't)** | |
| 43-17 | 131949 |
| 43-18 | 131958 |
| 43-19 | 132105 |
| 43-20 | 132919 |
| 43-21 | 120214 |
| 43-22 | 120367 |
| 43-23 | 121801 |
| 43-25 | 120368 |
| 43-26 | 1264047 |
| 43-27 | 131870 |
| 43-29 | 120611 |
| **DISTRIBUTORS** | |
| 44-5 | 930366 |
| 44-10 | 1193314 |
| 44-16 | 1479588 |
| 44-20 | 1274066 |
| 44-21 | 1274116 |
| 44-24 | 1479139 |
| 44-25 | 1626661 |
| 44-26 | 1626656 |
| 44-27 | 1501786 |
| 44-29 | 1648685 |
| 44-30 | 1642392 |
| 44-31 | 1922670 |
| 44-42 | 1881943 |
| 44-42 | 1889305 |
| 44-44 | 1788688 |

| Auto-Lite Sales Part No. | Chrysler |
|---|---|
| **GENERATORS** | |
| 45-4 | 853770 |
| 45-8 | E71258M |
| 45-9 | 1136934 |
| 45-11 | 1495199 |
| 45-12 | 1604834 |
| 45-15 | 1257392 |
| 45-16 | 1263971 |
| 45-17 | 1479175 |
| 45-18 | 1504760 |
| 45-19 | 1540596 |
| 45-20 | 1505824 |
| 45-21 | 1604825 |
| 45-22 | 1605400 |
| 45-23 | 1264054 |
| 45-27 | 1642005 |
| 45-30 | 1770755 |
| 45-31 | 1798760 |
| 45-32 | 1920845 |

| Auto-Lite Sales Part No. | Chrysler |
|---|---|
| **STARTING MOTORS** | |
| 46-5 | 1071819 |
| 46-7 | 1070939 |
| 46-8 | 1067335 |
| 46-10 | 1922641 |
| 46-11 | 1268125 |
| 46-13 | 1473558 |
| 46-14 | 1889260 |
| 46-16 | 1535557 |
| 46-18 | 1311459 |
| 46-19 | 1268126 |
| 46-20 | 1604480 |
| 46-24 | 1658033 |
| 46-25 | 1627289 |
| 46-26 | 1627290 |
| 46-45 | 1941107 |
| 46-46 | 1941117 |
| **SPEEDOMETER, FRAME ROTOR, ODOMETER** | |
| 48-1 | 589890 |
| 48-8 | 1604702 |
| 48-25 | 1798619 |
| **MISC. SPEEDOMETER PARTS** | |
| 49-4 | 1263532 |

| Auto-Lite Sales Part No. | Chrysler |
|---|---|
| **SPRINGS** | |
| 50-1 | 1752362 |
| 50-2 | 1605571 |
| 50-3 | 1818571 |
| 50-4 | 864912 |
| 50-6 | 958161 |
| 50-7 | 1818684 |
| 50-9 | 1818647 |
| 50-10 | 1818644 |
| 50-11 | 1818667 |
| 50-12 | 1818736 |
| 50-14 | 671490 |
| 50-15 | 1818822 |
| 50-16 | 960173 |
| 50-17 | 674935 |
| 50-18 | 1843155 |
| 50-19 | 1345517 |
| 50-20 | 1843379 |
| 50-21 | 1879287 |
| 50-22 | 1627279 |
| 50-23 | 1308183 |
| 50-24 | 1879321 |
| 50-25 | 1879320 |
| 50-27 | 1110964 |
| 50-28 | 1627263 |
| 50-29 | 852026 |
| 50-30 | 1627231 |
| 50-31 | 959310 |
| 50-32 | 1067297 |
| 50-34 | 1689772 |
| 50-35 | 1879282 |
| 50-37 | 1308243 |
| 50-38 | 1689774 |
| 50-40 | 674959 |
| 50-45 | 1879292 |
| 50-46 | 1627243 |
| 50-48 | 1308182 |
| 50-49 | 1627229 |
| 50-52 | 1658622 |
| 50-56 | 1879310 |
| 50-57 | 1879323 |
| 50-58 | 671505 |
| 50-62 | 1889496 |
| 50-63 | 1889519 |
| 50-64 | 1889538 |
| 50-65 | 636841 |
| 50-67 | 1889548 |
| 50-68 | 1889608 |
| 50-70 | 2084087 |
| 50-75 | 592565 |
| 50-81 | 2084681 |



MyMopar.com

# VENDOR NUMBER CROSS REFERENCE LIST

## AUTO-LITE

| VENDOR NUMBER | CHRYSLER NUMBER |
|---|---|
| 4-GS-125 | 1594 767 |
| 4-GS-150 | 1540 373 |
| 4-GS-200 | 1555 285 |
| 4-S-165 | 1436 277 |
| 4-S-250 | 1565 337 |
| 6-12-33-51 | 1391 399 |
| 6-12-34-51 | 1391 398 |
| 8-12-6-45 | 1122 921 |
| A-5 | 1406 647 |
| A-5-7 | 667 031 |
| A-7 | 1075 955 |
| A-9 | 691 672 |
| A-11 | 964 402 |
| A-32A | 1889 521 |
| A-42B | 1889 520 |
| A-52B | 1889 522 |
| A-3897 K 427 | 1929 343 |
| A-14908 A | 1798 596 |
| ADM-5 | 1889 295 |
| AG-3 B | 1889 712 |
| AG-4 | *2095 755 |
| AG-32 | *2095 675 |
| AG-52 | *2095 289 |
| AGR-2 | 1841 500 |
| AGR-8 S | 1614 216 |
| AGR-31 | 1648 989 |
| AGR-32 | 1689 297 |
| AGR-41 | 1658 910 |
| AGR-42 | 1658 852 |
| AGR-45 | 1553 043 |
| AGR-51 | 1568 040 |
| AGR-52 | 1689 073 |
| AGR-82 | 1704 305 |
| AL-7 | 691 673 |
| AR-5 | 1257 587 |
| AR-5 S | 1268 988 |
| AR-8 A | 1658 844 |
| AR-8 S | 1450 160 |
| AR-10 | 1479 185 |
| AR-31 | 1889 465 |
| AR-32 | 1753 672 |
| AR-41 | 1662 273 |
| AR-42 | 1658 851 |
| AR-51 | 1568 039 |
| AR-52 | 1658 850 |
| AR-80 | 1658 844 |
| AR-82 | 1658 843 |
| AT-4 | 1262 988 |
| AT-8 | 1262 986 |
| ATR-42 | *2095 255 |
| C-16-25 | 2084 108 |
| C181-101 | 1826 583 |
| CAE-4002 | 1627 412 |
| CAG-33 | 1842 000 |
| CAH-4001 SS | 1843 324 |
| CAL-4001 SS | 1818 837 |
| CAM-4001 SS | 1818 840 |
| CB-1805 | 1390 260 |
| CB-5777 | 1390 619 |
| CB-6134 | 854 798 |
| CB-13940 | 1122 887 |
| CB-13946 | 1124 730 |
| CB-14499 | 1123 385 |
| CB-15238 | 1345 574 |
| CB-17363 | 1390 624 |
| CB-17379 | 1273 969 |
| CB-17423 | 1390 625 |
| CB-17435 | 1390 616 |
| CB-17443 | 1390 621 |
| CB-17449 | 1390 009 |
| CB-17766 | 1390 626 |
| CB-17768 | 1390 026 |
| CB-17770 | 1390 623 |
| CB-18994 | 1390 622 |
| CB-22669 | 1570 970 |
| CB-24778 | 1648 133 |
| CE-308 A | 1271 779 |
| CE-1187 DQS | 578 506 |
| CE 1187 FNS | 1191 544 |
| CE-2229 S | 643 819 |
| CE-2260 AQS | 868 587 |
| CAH-4001 | 1688 212 |
| CAL-4001 SS | 1818 837 |
| CF-4013 | 924 053 |
| CM-4503 T | 1330 239 |
| CR-3224 JS | 1345 489 |
| CR-4002 M | 1311 474 |
| CT-4002 | 1394 885 |
| CT-4004 | 1612 741 |
| CW-4001 T | 1401 015 |
| CW-4002 | 1672 746 |
| CY-4002 | 1394 885 |
| CAC-4001 | 1595 023 |
| CAF-4001 | 1843 324 |
| CAG-4001 | 1688 210 |
| CAH-4001 | 1688 212 |
| CAK-4001 | 1672 793 |
| CAM-4001 | 1818 840 |
| DA-60 A | 1404 671 |
| DA-132 | 1495 552 |
| DD-44 | 960 170 |
| DK-23 C | 1253 343 |
| DK-45 | 636 816 |
| EBA-2 A | 1109 698 |
| EBA-17 | 661 603 |
| EBA-39 | 1473 219 |
| EBA-57 | 1066 722 |
| EBA-79 | 1110 992 |
| EBA-87 | 1134 138 |
| EBA-1213 | 927 083 |
| EBA-1225 | 927 084 |
| EBA-2006 | 927 086 |
| EBA-2007 | 1495 571 |
| EBA-2008 | 927 088 |
| EBA-2031 | 927 089 |
| EBA-2105 | 927 091 |
| EBA-3307 | 1495 571 |
| EBA-3307 A | 1670 141 |
| EBA-7905 | 1110 995 |
| EBB-20 | 1473 219 |
| EBB-26 A | 1532 984 |
| EBB-32 A | 1550 078 |
| EBB-53 | 1752 387 |
| EBB-69 | 2084 438 |
| EBB-70 | 2084 664 |
| EBB-79 | *2095 397 |
| EBB-832 | 1473 219 |
| EC-41 | 1154 359 |
| ED-15602 | 1842 522 |
| EMA-4001 | 1498 901 |
| EMA-4002 | 1627 166 |
| EMB-4001 | 1627 146 |
| EMC-4002 | 1527 422 |
| EMD-47 | 1540 383 |
| EMD-1044 | 1540 476 |
| EMD-1045 | 1540 477 |
| EMD-4003 B | 1540 366 |
| EMF-2006 | 1527 950 |
| EMG-20 | 1540 564 |
| EMG-40 | 1527 831 |
| EMG-106 | 1505 326 |
| EMG-1099 A | 1571 125 |
| EMG-1109 L | 1571 233 |
| EMG-1110 R | 1571 232 |
| EMG-2006 | 1527 945 |
| EMG-3107 L | 1571 099 |
| EMG-3108 R | 1571 098 |
| EMG-4102 B | 1540 122 |
| EMG-4105 | 1505 322 |
| EMJ-1005 B | 1818 504 |
| EMJ-2024 | 1818 503 |
| EMJ-2026 | 1818 505 |
| EMJ-4104 | 1648 342 |
| EMK-2006 | 1527 950 |
| EMK-4101 | 1540 123 |
| EMK-4105 | 1509 627 |
| EMM-4002 | 1603 324 |
| EMP-24 | 1604 242 |
| EMP-40 | 1604 243 |
| EMP-43 R | 1594 973 |
| EMP-62 | 1568 051 |
| EMP-1053 | 1568 052 |
| EMP-1063 | 1568 050 |
| EMP-1065 | 1568 049 |
| EMP-1075 E | 1569 823 |
| EMP-4002 | 1594 772 |
| EMP-4003 | 1604 028 |
| EMP-4101 | 1568 077 |
| EMR-4001 | 1593 331 |
| EMS-2006 | 1605 549 |
| EMS-4001 | 1595 331 |

MyMopar.com

# VENDOR NUMBER CROSS REFERENCE LIST

## AUTO-LITE

| VENDOR NUMBER | CHRYSLER NUMBER |
|---|---|
| EMU-1057 | 1604 023 |
| EMU-1071 L | 1622 012 |
| EMU-1071 R | 1622 011 |
| EMU-1078 L | 1658 486 |
| EMU-1085 | 1622 435 |
| EMU-1089 | 1622 436 |
| EMU-2006 A | 1605 570 |
| EMU-2047 | 1879 341 |
| EMU-2047 A | 1818 890 |
| EMU-4101 | 1622 403 |
| EMV-12 | 1605 594 |
| EMV-19 | 1605 589 |
| EMV-25 | 1752 654 |
| EMV-43 | 1752 655 |
| EMV-1003 | 1752 656 |
| EMV-2006 | 1605 593 |
| EMW-2006 | 1605 597 |
| EMX-1005 | 1752 686 |
| EMX-2002 | 1752 679 |
| EMX-2006 | 1658 583 |
| EMY-2006 | 1658 586 |
| EMZ-32 | 1642 029 |
| EMZ-40 | 1594 992 |
| EMZ-49 | 1605 572 |
| EMZ-53 | 1594 995 |
| EMZ-54 | 1594 993 |
| EMZ-57 | 1752 661 |
| EMZ-59 | 1752 662 |
| EMZ-63 | 1605 068 |
| EMZ-64 | 1605 605 |
| EMZ-65 | 1605 607 |
| EMZ-66 | 1605 602 |
| EMZ-72 | 1605 606 |
| EMZ-74 | 1752 663 |
| EMZ-1058 | 1594 990 |
| EMZ-1060 | 1605 601 |
| EMZ-1070 L | 1605 610 |
| EMZ-1070 R | 1605 609 |
| EMZ-1071 L | 1622 010 |
| EMZ-1071 R | 1622 009 |
| EMZ-1076 | 1648 064 |
| EMZ-1085 | 1605 524 |
| EMZ-1089 | 1605 425 |
| EMZ-1098 L | 1658 757 |
| EMZ-2003 | 1752 664 |
| EMZ-2006 | 1605 576 |
| EMZ-4001 | 1595 003 |
| EO-16235 | *1889 770 |
| EOD-15431 | 1842 798 |
| EOP-14576 | 1770 732 |
| EPF-1005 | 1752 665 |
| EPF-1060 | 1642 086 |
| EPF-1070 R | 1658 348 |
| EPF-1070 L | 1658 349 |
| EPF-2002 | 1752 666 |
| EPF-2006 | 1627 272 |
| EPF-4001 | 1627 384 |
| EPG-4001 | 1627 146 |
| EPH-1005 | 1752 667 |
| EPH-2002 | 1752 668 |
| EPH-2006 | 1658 592 |
| EPH-4101 | 1627 380 |
| EPH-4102 | 1662 302 |
| EPH-4103 | 1788 675 |
| EPJ-1005 | 1752 688 |
| EPJ-1005 A | 1752 689 |
| EPJ-1005 C | 1818 868 |
| EPJ-1005 D | 1818 869 |
| EPJ-2002 A | 1752 641 |
| EPJ-2006 | 1752 640 |
| EPJ-2048 | 1752 637 |
| EPJ-2048 A | 1818 871 |
| EPJ-2048 B | 1879 262 |
| EPJ-2052 | 1818 870 |
| EPJ-4003 | 1642 434 |
| EPJ-4008 | 1810 758 |
| EPJ-4102 | 1753 856 |
| EPK-28 | 1818 889 |
| EPK-1005 | 1752 660 |
| EPK-1005 A | 1752 687 |
| EPK-1005 E | 1818 874 |
| EPK-2002 | 1752 652 |
| EPK-2006 | 1752 653 |
| EPK-2017 | 1818 873 |
| EPK-2026 | 1752 642 |
| EPK-2034 | 1818 863 |
| EPK-2034 A | 1818 900 |
| EPK-2038 | 1818 875 |
| EPK-2048 | 1818 866 |
| EPK-2048 A | 1818 862 |
| EPK-2048 B | 1879 264 |
| EPK-4001 | 1648 896 |
| EPK-4201 | 1769 459 |
| EPP-4001 | 1648 239 |
| EPS-1005 | 1879 344 |
| EPT-4001 | 1660 551 |
| EPT-4005 | 1788 676 |
| EPV-25 | 1818 806 |
| EPV-26 | 1818 807 |
| EPV-34 | 1818 808 |
| EPV-43 RA | 1818 685 |
| EPV-49 | 1752 513 |
| EPV-50 | 1769 565 |
| EPV-64 | 1753 712 |
| EPV-72 | 1753 711 |
| EPV-78 | 1818 809 |
| EPV-94 | 1770 290 |
| EPV-95 | 1770 289 |
| EPV-1005 | 1818 810 |
| EPV-1060 | 1704 072 |
| EPV-1062 | 1819 075 |
| EPV-1070 L | 1704 068 |
| EPV-1070 R | 1704 067 |
| EPV-1071 L | *1704 711 |
| EPV-1076 L | 1779 677 |
| EPV-1076 R | 1779 584 |
| EPV-1117 | 1704 744 |
| EPV-2002 | 1818 811 |
| EPV-2003 | 1818 812 |
| EPV-2006 | 1818 813 |
| EPV-4001 | 1770 336 |
| EPV-4001 A | 1770 337 |
| EPV-4001 C | 1779 860 |
| EPV-4001 D | 1838 932 |
| EPV-4001 E | 1842 408 |
| EPV-4001 F | 1886 123 |
| EPV-4001 G | 1842 964 |
| EPW-49 | 1605 572 |
| EPW-1005 | 1818 876 |
| EPW-1070 L | 1704 743 |
| EPW-1070 R | 1770 707 |
| EPW-2002 | 1818 877 |
| EPW-2002 A | 1879 342 |
| EPW-2006 | 1818 878 |
| EPW-4001 | 1770 882 |
| EPW-4001 B | 1838 937 |
| EPX-20 | 1818 886 |
| EPX-53 | 1753 174 |
| EPX-1003 | 1818 880 |
| EPX-1005 | 1818 882 |
| EPX-2006 | 1818 879 |
| EPX-3002 | 1818 881 |
| EPZ-1005 | 1818 865 |
| EPZ-1005 A | 1818 864 |
| EPZ-4001 | 1753 234 |
| EPZ-4003 | 1810 759 |
| EPZ-4004 | *2093 843 |
| EPZ-4101 | 1753 870 |
| EPZ-4103 | 1779 595 |
| ERA-20 | 1818 904 |
| ERA-1007 | 1818 905 |
| ERA-1008 | 1818 906 |
| ERA-2006 | 1818 907 |
| ERA-2048 A | 1818 908 |
| ERC-2005 | 1879 416 |
| ERC-2006 | 1879 415 |
| EW-41 | 1154 343 |
| EW-43 | 1300 635 |
| EW-208 | 1660 965 |
| EWB-20 A | 1818 814 |
| EWD-62 | 1273 472 |
| EWD-100 | 883 086 |
| EWD-115 | 837 999 |
| EWD-2055 | 952 431 |
| EWF-12 | 1495 533 |
| EWG-20 A | 1843 157 |
| EWG-1030 | 958 167 |
| EWH-38 | 1261 021 |
| EWH-4001 | 974 467 |
| EWJ-41 | 1262 344 |
| EWJ-43 L | 1262 345 |
| EWJ-43 R | 1262 346 |



MyMopar.com

# AUTO-LITE

| VENDOR NUMBER | CHRYSLER NUMBER |
|---|---|
| EWJ-51 | 1262 350 |
| EWJ-64 | 1390 521 |
| EWJ-75 A | 1262 351 |
| EWJ-80 | 1239 471 |
| EWJ-81 A | 1262 354 |
| EWJ-91 | 1194 585 |
| EWJ-131 | 1233 532 |
| EWJ-132 | 1233 531 |
| EWJ-142 | 1272 410 |
| EWJ-1090 | 1194 581 |
| EWJ-1097 L | 1310 541 |
| EWJ-1097 R | 1310 543 |
| EWJ-1117 | 1310 656 |
| EWJ-1119 | 1308 336 |
| EWJ-1120 L | 1310 654 |
| EWJ-1120 R | 1310 661 |
| EWJ-1141 L | 1370 210 |
| EWJ-1141 R | 1370 209 |
| EWJ-1162 RA | 1540 371 |
| EWJ-1162 LA | 1540 372 |
| EWJ-1167 | 1540 145 |
| EWJ-2003 C | 1391 902 |
| EWJ-2006 | 1262 365 |
| EWJ-2056 | 1262 366 |
| EWJ-2072 | 1540 475 |
| EWJ-2143 | 1390 519 |
| EWJ-2154 | 1495 606 |
| EWJ-4002 | 1261 036 |
| EWJ-4007 A | 1436 660 |
| EWJ-4011 | 1272 340 |
| EWK-26 | 1265 716 |
| EWK-43 | 1265 717 |
| EWK-74 | 1660 965 |
| EWK-100 | 1261 446 |
| EWK-100 A | 1261 447 |
| EWK-1015 | 1261 454 |
| EWK-1085 | 1263 468 |
| EWK-1090 | 1263 469 |
| EWK-2006 | 1265 731 |
| EWK-2071 | 1265 732 |
| EWK-2072 | 1265 736 |
| EWK-4101 | 1261 499 |
| EWK-4102 | 1261 498 |
| EWM-20 | 1308 465 |
| EWM-1005 D | 1605 556 |
| EWM-2006 | 1308 472 |
| EWM-4001 | 1300 526 |
| EWO-4001 | 1343 472 |
| EWR-42 | 1473 608 |
| EWR-43 | 1540 105 |
| EWR-43 R | 1540 104 |
| EWR-81 | 1436 565 |
| EWR-81 A | 1436 566 |
| EWR-81 B | 1436 567 |
| EWR-1026 A | 1439 662 |
| EWR-1026 B | 1473 111 |
| EWR-1071 | 1436 242 |
| EWR-1072 | 1370 004 |
| EWR-1084 | 1479 613 |
| EWR-1099 L | 1370 023 |
| EWR-1099 R | 1370 022 |
| EWR-1100 L | 1383 507 |
| EWR-1100 R | 1383 506 |
| EWR-2006 | 1436 247 |
| EWR-2082 | 1495 353 |
| EWR-2096 S | 1479 946 |
| EWW-20 | 1499 160 |
| EWW-2006 | 1479 685 |
| EWW-4001 | 1436 729 |
| EWY-1073 | 1473 235 |
| EWY-1085 E | 1540 467 |
| EWY-1085 F | 1540 466 |
| EWY-1085 G | 1540 522 |
| EWY-1085 H | 1540 524 |
| EWY-1097 LA | 1540 150 |
| EWY-1097 RA | 1540 149 |
| EWY-1098 LA | 1540 369 |
| EWY-1098 RA | 1540 368 |
| EWY-1116 F | 1540 520 |
| EWY-1116 G | 1540 523 |
| EWY-1117 C | 1540 521 |
| EWY-4004 | 1495 163 |
| EX-88454 | 1343 488 |
| EX-93914 | 1440 349 |
| F5-3276-P-16 | *1934 350 |
| FA-31 S | 1313 837 |
| FA-1012 B | 1618 098 |
| FA-1037 | 1631 343 |
| FB-16 | 1313 698 |
| FB-17 | 1313 699 |
| FB-1030 | 1618 096 |
| FB-1031 | 1618 119 |
| FB-1034 | 1618 099 |
| FB-4002 S | 1637 367 |
| FP-672 | 1631 421 |
| GAA-32 | 671 477 |
| GAA-35 A | 1273 382 |
| GAR-63 | 636 812 |
| GAR-64 | 636 813 |
| GAR-73 | 636 796 |
| GAR-95 | 648 359 |
| GAR-98 A | 636 800 |
| GAR-171 | 648 392 |
| GAR-221 A | 1273 438 |
| GBF-79 | 636 804 |
| GBG-24 M | 1405 151 |
| GBG-49 C | 1405 143 |
| GBG-56 D | 1405 149 |
| GBG-57 B | 1405 147 |
| GBG-66 B | 1405 137 |
| GBG-121 | 960 545 |
| GBG-1056 F | 1405 148 |
| GBJ-25 | 674 931 |
| GBM-21 B | 40 654 |
| GBM-124 | 1253 362 |
| GBM-2012 AS | 689 929 |
| GBM-2065 F | 671 474 |
| GBM-4610-5 | 691 696 |
| GBW-24 B | 673 031 |
| GBW-34 | 671 481 |
| GBW-45 | 671 490 |
| GBW-45 A | 1110 952 |
| GBW-66 | 688 015 |
| GBW-69 | 695 627 |
| GBW-72 | 695 628 |
| GBW-73 | 695 629 |
| GBW-1024 N | 1138 490 |
| GBW-1068 | 695 626 |
| GBW-2012 CS | 1550 087 |
| GBW-2052 FM | 1112 913 |
| GBY-25 | 674 936 |
| GBY-34 C | 1405 142 |
| GBY-38 A | 674 919 |
| GCD-2012 S | 960 544 |
| GCE-24 | 674 944 |
| GCE-40 | 916 572 |
| GCE-40 B | 1405 138 |
| GCE-53 | 674 935 |
| GCE-53 A | 1123 522 |
| GCE-54 | 674 936 |
| GCG-54 | 960 173 |
| GCE-2002 S | 1262 932 |
| GCE-2012 S | 677 175 |
| GCJ-26 | 673 014 |
| GCK-4806-1 | E-54 629-M |
| GCP-2052 FM | 1138 489 |
| GCP-2105 FM | 1531 572 |
| GCP-4801 | E-40 259-M |
| GCT-25 | 683 358 |
| GCY-25 | 683 357 |
| GDD-27 | 960 161 |
| GDD-28 | 960 162 |
| GDJ-23 B | 1405 139 |
| GDJ-63 D | 1404 672 |
| GDJ-73 B | 1405 150 |
| GDJ-1008 | 916 568 |
| GDJ-1010 | 916 570 |
| GDJ-1012 | 957 473 |
| GDJ-1073 | 919 871 |
| GDJ-1073 B | 1405 146 |
| GDJ-2012 BS | 1405 140 |
| GDJ-2012 CS | 1502 235 |
| GDJ-2062 FT | 1405 144 |
| GDJ-2065 F | 916 581 |
| GDJ-2074 | 919 869 |
| GDJ-2074 BS | 1405 141 |
| GDJ-2171 S | 1558 130 |
| GDJ-2202 FT | 1558 148 |
| GDJ-4808 | 918 720 |
| GDJ-4840 T-S1 | 1330 235 |
| GDW-44 | 1138 481 |



MyMopar.com

# VENDOR NUMBER CROSS REFERENCE LIST

## AUTO-LITE

| VENDOR NUMBER | CHRYSLER NUMBER |
|---|---|
| GDZ-64 | 1135 623 |
| GDZ-1002 A | 860 491 |
| GDZ-1003 | 860 492 |
| GDZ-1005 | 858 269 |
| GDZ-1007 | 858 270 |
| GDZ-1007 A | 1135 607 |
| GDZ-1008 | 858 271 |
| GDZ-1008 A | 1135 608 |
| GDZ-1008 B | 1323 951 |
| GDZ-1064 A | 1320 488 |
| GDZ-2006 F | 859 900 |
| GDZ-2057 F | 596 888 |
| GDZ-2094 | 1135 620 |
| GDZ-2094 AS | 1320 486 |
| GDZ-2094 S | 1616 621 |
| GDZ-4801 S1 | 853 770 |
| GDZ-4802 S1 | 595 316 |
| GDZ-4820 M | 1123 539 |
| GDZ-4822 S1 | 1138 509 |
| GE-48 | 661 647 |
| GE-48 A | 1843 436 |
| GEA-34 | 859 899 |
| GEB-29 | 916 588 |
| GEB-58 | 953 732 |
| GEB-1008 A | 1189 547 |
| GEB-2006 F | 860 922 |
| GEB-6001 S-1 | 1194 650 |
| GEE-27 | 1752 647 |
| GEF-1008 C | 1138 483 |
| GEF-2006 F | 2084 290 |
| GEF-4901 M | E-71 260-M |
| GEF-4902 M | E-71 261-M |
| GEF-4903 M | 1323 917 |
| GEF-4904 M | 1323 918 |
| GEF-5003 | 1889 606 |
| GEW-31 | 120 396 |
| GEW-1003 | 594 372 |
| GFM-18 A | 131 954 |
| GFR-56 A | 1405 145 |
| GFY-1007 A | 1253 329 |
| GFY-1008 A | 1253 331 |
| GFY-2093 F | 1689 799 |
| GFY-2101 F | 1391 249 |
| GFY-2107 F | 1689 780 |
| GFY-2108 F | 1689 801 |
| GG-164 | 636 815 |
| GGA-20 | 1253 327 |
| GGA-52 | 1253 332 |
| GGA-84 | 1571 409 |
| GGA-86 | 1818 857 |
| GGA-1005 A | 1391 246 |
| GGA-1068 | 1253 338 |
| GGA-1080 | 1384 050 |
| GGA-1086 | 1818 749 |
| GGA-2102 S | 1689 779 |
| GGA-6002 S1 | 1658 865 |
| GGA-6003 S1 | 1658 861 |
| GGA-6005 S1 | 1662 147 |
| GGA-6008 S1 | *1661 773 |
| GGE-1003 | 1112 915 |
| GGE-1004 A | 1112 920 |
| GGE-4804 M | E-71 258-M |
| GGE-4805 M | E-71 259-M |
| GGE-4807 M | 1311 471 |
| GGF-10 | 1266 521 |
| GGF-11 | 1266 522 |
| GGF-13 | 1266 524 |
| GGJ-27 | 1267 793 |
| GGJ-2012 S | 1253 341 |
| GGJ-2021 S | 1501 791 |
| GGJ-2079 S | 1495 546 |
| GGJ-2101 AF | 1627 214 |
| GGJ-2103 F | 1384 049 |
| GGJ-2102 S | 1627 247 |
| GGJ-2104 F | 1473 063 |
| GGJ-2107 F | 1627 248 |
| GGJ-6001 S1 | 1136 931 |
| GGJ-6002 S1 | 1263 554 |
| GGJ-6003 S1 | 1383 529 |
| GGJ-6004 S1 | 1440 393 |
| GGJ-6005 S1 | 1540 429 |
| GGJ-6007 S1 | 1390 077 |
| GGJ-6008 S1 | 1604 843 |
| GGU-27 | 1253 348 |
| GGU-28 | 1253 349 |
| GGU-30 | 1253 344 |
| GGU-31 | 1253 345 |
| GGU-32 | 1253 346 |
| GGU-33 | 1253 355 |
| GGU-34 | 1253 356 |
| GGU-40 A | 1818 775 |
| GGU-45 | 1269 228 |
| GGU-51 | 1473 055 |
| GGU-1002 A | 1253 358 |
| GGU-1003 | 1253 361 |
| GGU-1003 D | 1879 569 |
| GGU-1007 | 1253 351 |
| GGU-1007 A | 1483 977 |
| GGU-1008 | 1253 352 |
| GGU-1008 A | 1483 978 |
| GGU-1045 | 1269 227 |
| GGU-1064 A | 1889 351 |
| GGU-1065 | 1527 960 |
| GGU-2006 F | 1253 360 |
| GGU-2006 FF | 1566 346 |
| GGU-2012 S | 1253 367 |
| GGU-2042 F | 1495 573 |
| GGU-2046 F | 1268 226 |
| GGU-2048 S | 1473 057 |
| GGU-2054 F | 1473 060 |
| GGU-2063 F | 1571 493 |
| GGU-2070 S | 1605 558 |
| GGU-2071 F | 1605 559 |
| GGU-6001 FF-S1 | 1507 840 |
| GGU-6001 S1 | 1136 934 |
| GGU-6002 S1 | 1262 334 |
| GGU-6004 S1 | 1440 394 |
| GGU-6005 S1 | 1479 730 |
| GGU-6006 S1 | 1495 199 |
| GGU-6008 S1 | 1540 816 |
| GGU-6009 S1 | 1540 640 |
| GGU-6012-S1 | 1507 928 |
| GGW-40 | 1271 164 |
| GGW-52 | 1269 238 |
| GGW-72 | 1752 673 |
| GGW-83 | 1610 386 |
| GGW-87 | 1552 859 |
| GGW-88 | 1552 885 |
| GGW-97 | 1605 567 |
| GGW-102 | 1752 674 |
| GGW-111 | 1818 859 |
| GGW-1002 E | 1402 561 |
| GGW-1003 | 1266 500 |
| GGW-1008 | 1266 493 |
| GGW-1024 | 1266 502 |
| GGW-1031 | 1266 519 |
| GGW-1072 | 1495 496 |
| GGW-1078 | 1527 938 |
| GGW-1082 | 1527 968 |
| GGW-2001 AS | 1616 622 |
| GGW-2002 AS | 1402 559 |
| GGW-2002 S | 1384 081 |
| GGW-2006 F | 1266 499 |
| GGW-2006 FT | 1402 565 |
| GGW-2012 S | 1605 565 |
| GGW-2032 F | 1266 526 |
| GGW-2045 F | 1479 690 |
| GGW-2046 F | 1505 843 |
| GGW-2047 S | 1505 842 |
| GGW-2079 S | 1507 941 |
| GGW-2089 S | 1605 566 |
| GGW-2090 F | 1605 568 |
| GGW-2098 F | 1605 563 |
| GGW-6001 AT | 1330 240 |
| GGW-6001 S | 1257 392 |
| GGW-6001 S1 | 1504 760 |
| GGW-6001 SN | 1257 392 |
| GGW-6001 T-S1 | 1330 241 |
| GGW-6002 S1 | 1263 971 |
| GGW-6004 T-S1 | 1326 562 |
| GGW-6005-T-S1 | 1401 004 |
| GGW-6008-S1 | 1479 175 |
| GGW-6010 S1 | 1527 328 |
| GGW-6012 S1 | 1540 596 |
| GGW-6013 S1 | 1505 824 |
| GGW-6014-S1 | 1540 820 |
| GGW-6016 S1 | 1604 825 |
| GGW-6019 S1 | 1550 577 |
| GGY-45 | 1345 517 |
| GGY-45 A | 1402 564 |
| GGY-2012 S | 1402 500 |



MyMopar.com

# AUTO-LITE

| VENDOR NUMBER | CHRYSLER NUMBER |
|---|---|
| GGY-2012 BS | 1661 748 |
| GGY-2017 BS | 1610 378 |
| GGY-3080 S | 1610 383 |
| GGY-3080 BS | 1692 763 |
| GGZ-1064 A | 1889 351 |
| GGZ-2006 F | 1268 129 |
| GGZ-2046 F | 1507 942 |
| GGZ-6001 M-S1 | 1321 751 |
| GGZ-6001-S1 | 1264 054 |
| GGZ-6002-S1 | 1506 324 |
| GGZ-6004-S1 | 1661 761 |
| GHA-15 | 1273 439 |
| GHA-35 | 1273 446 |
| GHA-36 | 1273 447 |
| GHA-37 | 1273 444 |
| GHA-38 | 1273 432 |
| GHA-39 | 1273 448 |
| GHA-40 | 1273 449 |
| GHA-41 | 1273 450 |
| GHA-42 | 1273 451 |
| GHA-47 S | 1394 888 |
| GHA-53 | 1273 454 |
| GHA-1004 S | 1273 437 |
| GHA-1044 | 1273 455 |
| GHA-1052 | 1273 440 |
| GHA-2006 FT | 1273 445 |
| GHA-2012 S | 1273 441 |
| GHA-4802 UT | 1268 963 |
| GHB-3 | 1879 496 |
| GHB-1003 | 1879 495 |
| GHB-2006 F | 1402 501 |
| GHB-4801 S1 | 1323 901 |
| GHB-4802 S1 | 1842 609 |
| GHC-1007 | 1402 493 |
| GHC-1008 | 1402 494 |
| GHC-6002 S | 1323 921 |
| GHC-6003 S1 | 1610 368 |
| GHF-1007 | 1483 986 |
| GHF-1007 A | 1499 171 |
| GHF-1008 | 1483 987 |
| GHF-1008 A | 1499 172 |
| GHF-2006 F | *1818 560 |
| GHF-2006 AFT | 1555 268 |
| GHF-3006 FM | 1483 989 |
| GHG-2048 FM | 1612 734 |
| GHM-3 | 1818 858 |
| GHM-1003 | 1818 640 |
| GHM-1003 A | 1889 349 |
| GHM-2006 F | 1752 520 |
| GHM-2034 F | 1879 568 |
| GHM-2042 F | 1499 173 |
| GHM-2045 F | 1889 350 |
| GHM-2046 F | 1752 408 |
| GHM-2059 F | 1752 289 |
| GHM-2059 FS | 1752 289 |
| GHM-2071 F | 1605 561 |
| GHM-2074 F | 1843 209 |
| GHM-6001 S1 | 1753 624 |
| GHM-6003-SN1 | 1704 272 |
| GHM-6004-S1 | 1704 265 |
| GHM-6007-S1 | 1704 267 |
| GHM-6008-S1 | 1787 869 |
| GHM-6009-S1 | 1665 108 |
| GHM-6010 S1 | 1770 747 |
| GHM-6011 S1 | 1779 960 |
| GHM-8002 S1 | 1842 773 |
| GHM-8004 S1 | 1842 776 |
| GHM-8005 S1 | 1842 779 |
| GHM-8006 B | 1889 400 |
| GHP-2001 S | 1555 264 |
| GHP-2002 AS | 1818 559 |
| GHP-6002 T-S1 | 1532 976 |
| GHR-20 | 1818 824 |
| GHR-20 B | 2084 289 |
| GHR-1003 | 1610 380 |
| GHR-1003 B | 2084 293 |
| GHR-1005 | 1610 377 |
| GHR-2006 FM | 1630 647 |
| GHR-2081 | 1630 645 |
| GHR-4801 M | 1535 579 |
| GHR-4801 NM | 1616 642 |
| GHR-4802 M | 1535 591 |
| GHR-4802 NM | 1616 643 |
| GHU-2006 FM | 1610 379 |
| GHU-4801 M | 1553 022 |
| GHU-4801 NM | 1616 645 |
| GHU-4802 M | 1553 023 |
| GHU-4802 NM | 1616 644 |
| GHW-1005 | 1612 726 |
| GHW-1005 B | 2084 298 |
| GHW-2002 S | 2084 292 |
| GHW-2006 AF | 2084 299 |
| GHW-2006 FM | 1612 729 |
| GHW-3017 S | 2084 300 |
| GHW-4801-M | 1553 025 |
| GHW-4801-NM | 1616 646 |
| GHW-4802-M | 1553 026 |
| GHW-4802 NM | 1616 647 |
| GHW-4809 | 1889 481 |
| GHW-4810 | 1889 483 |
| GHX-4801 NM | 1616 648 |
| GHX-4802 NM | 1616 649 |
| GHX-4803 | 1889 827 |
| GHX-4804 | 1889 829 |
| GJ-20 | 1300 503 |
| GJ-20 A | 1532 980 |
| GJ-20 C | 2084 659 |
| GJC-19 | 1658 529 |
| GJC-35 | 1627 277 |
| GJC-38 A | 2084 265 |
| GJC-39 | 1752 692 |
| GJC-41 | 1627 278 |
| GJC-42 | 1627 279 |
| GJC-50 | 1658 597 |
| GJC-57 | 1818 860 |
| GJC-1005 | 1568 078 |
| GJC-1007 A | 1752 645 |
| GJC-1008 A | 1752 646 |
| GJC-1019 | *2196 328 |
| GJC-1031 A | *2196 329 |
| GJC-1033 | 1752 693 |
| GJC-1034 | 1752 694 |
| GJC-1050 | *2084 855 |
| GJC-1057 | 1818 784 |
| GJC-1057 A | 1889 385 |
| GJC-1061 | 2084 264 |
| GJC-1082 | 1662 174 |
| GJC-1102 | 1658 527 |
| GJC-1107 | 1689 791 |
| GJC-1111 | 1818 581 |
| GJC-1111 A | 1889 234 |
| GJC-1111 B | *2084 852 |
| GJC-1112 | 1843 161 |
| GJC-1112 A | *2196 326 |
| GJC-2002 A | *2084 861 |
| GJC-2012 AS | 1843 156 |
| GJC-2032 F | 1568 079 |
| GJC-2044 | 1658 526 |
| GJC-2047 F | 1661 749 |
| GJC-2048 F | 1662 175 |
| GJC-2055 F | 1689 793 |
| GJC-2056 F | 1689 803 |
| GJC-2058 F | 1879 571 |
| GJC-2059 F | 1889 353 |
| GJC-2060 | 2084 263 |
| GJC-2090 F | 1658 608 |
| GJC-2098 F | 1658 617 |
| GJC-6002-S1 | 1565 827 |
| GJC-6003-S1 | 1568 355 |
| GJC-7001-S1 | 1642 000 |
| GJC-7002-S1 | 1770 755 |
| GJC-7003-S1 | 1642 005 |
| GJC-7005-S1 | 1787 871 |
| GJC-7006-S1 | 1642 009 |
| GJC-7009-S1 | 1569 860 |
| GJC-7010-S1 | 1662 153 |
| GJC-7011-S1 | 1689 302 |
| GJC-7012 S1 | 1770 755 |
| GJC-7013 S1 | 1779 945 |
| GJC-7014 S1 | 1787 871 |
| GJC-7017 S1 | *1941 108 |
| GJC-7401 T-61 | *2095 498 |
| GJM-1005 | 1889 352 |
| GJM-1005 C | *2084 860 |
| GJM-7001 | 1920 863 |
| GJM-7002 S1 | 1798 760 |
| GJM-7003 S1 | 1920 845 |
| GJM-8001 S1 | 1842 800 |
| GJM-8002 S1 | 1842 794 |
| GJM-8201 A | *2095 070 |
| GJM-8203 S1 | *2095 417 |



MyMopar.com

# VENDOR NUMBER CROSS REFERENCE LIST

## AUTO-LITE

| VENDOR NUMBER | CHRYSLER NUMBER |
|---|---|
| GK-20 A | 673 009 |
| GK-38 | 859 901 |
| GK-38 C | 1314 123 |
| GK-215 | 120 395 |
| GY-20 B | 1110 947 |
| HA-1025 | 643 956 |
| HA-4029 | 866 103 |
| HA-4032 | 1089 619 |
| HA-4034 | 1089 621 |
| HA-4035 | 1188 465 |
| HA-4042 | 1540 453 |
| HA-4101 | 1565 848 |
| HA-4102 | 1565 840 |
| HAB-88 A | 1662 342 |
| HAB-1052 L | 1540 268 |
| HAB-1052 R | 1540 267 |
| HAB-4017 | 1436 670 |
| HAB-4018 | 1436 669 |
| HAB-4028 | 1622 476 |
| HAB-4313 | 1302 784 |
| HAB-4314 | 1302 785 |
| HAB-4603 | 1540 264 |
| HAB-4604 | 1540 263 |
| HAB-4617 | 1523 540 |
| HAB-4664 | 1523 541 |
| HAD-1026 | 1753 017 |
| HAD-1027 | 1753 017 |
| HAD-1028 | 1838 278 |
| HAD-1032 L | 1779 474 |
| HAD-1032 R | 1779 473 |
| HAD-1033 L | 1753 101 |
| HAD-1033 R | 1753 100 |
| HAD-2042 | 1753 059 |
| HAD-4027 | 1622 484 |
| HAD-4101 | 1753 001 |
| HAD-4627 | 1627 303 |
| HAD-4628 | 1627 302 |
| HAD-4729 | 1660 936 |
| HAD-4733 | 1658 822 |
| HAD-4734 | 1658 821 |
| HAD-4801 | 1753 006 |
| HAD-4804 | 1753 007 |
| HAD-4901 | 1664 986 |
| HAD-4905 | 1779 472 |
| HAD-4906 | 1779 471 |
| HAD-4909 | 1753 092 |
| HAD-4910 | 1753 093 |
| HAD-4913 | 1753 087 |
| HAD-4916 | 1753 086 |
| HAF-4523 AA | *1605 186 |
| HAF-4523 BB | *1605 185 |
| HC-135 | 1089 626 |
| HD-4018 | 1089 622 |
| HD-4102 | 1565 842 |
| HO-34 | 863 141 |
| HO-35 | 870 341 |
| HO-39 | 861 248 |
| HO-1025 | 860 933 |
| HO-1073 | 857 770 |
| HO-1074 | 857 777 |
| HR-43 | 652 398 |
| HRC-4001 | 853 750 |
| HRL-4101 | 1113 099 |
| HRM-4002 | 1538 314 |
| HRM-4102 | 1113 084 |
| HRM-4104 | 1594 487 |
| HRS-4001 | 1120 526 |
| HRT-4001 A | 1479 522 |
| HRV-4001 | 1370 235 |
| HRW-4001 A | 1440 445 |
| HRZ-4001 L | 1495 223 |
| HRZ-4001 R | 1495 222 |
| HRZ-4002 | 1473 791 |
| HW-9 | 1310 719 |
| HW-1008 A | 1310 718 |
| HW-1011 | 1310 720 |
| HW-4101 | 1241 032 |
| HW-4102 | 1241 033 |
| HW-4203 | 1436 757 |
| HW-4204 | 1436 758 |
| IA-013 | 1345 583 |
| IA-131 | 643 908 |
| IAC-2040 L | *2084 639 |
| IAD-8 | 1089 089 |
| IAD-10 | 1089 090 |
| IAD-12 | 1089 089 |
| IAD-14 A | 1323 928 |
| IAD-1014 M | 1483 967 |
| IAD-1100 RH | 1089 081 |
| IAD-2004 B | 1134 140 |
| IAD-2015 | 1089 085 |
| IAD-2021 | 1089 087 |
| IAD-4201 | 930 367 |
| IAD-4203 | 1109 761 |
| IAE-4001 M | 1075 920 |
| IAK-8 | 696 043 |
| IAK-4002-1 M | 1119 565 |
| IAL-4001-1M | 1123 056 |
| IAL-4004-1M | 1119 564 |
| IAO-7 | 1195 772 |
| IAO-13 | 1345 583 |
| IAO-14 | 1267 371 |
| IAO-17 | 1267 367 |
| IAO-17 M | 1323 924 |
| IAO-20 | 1308 183 |
| IAO-1003 | 1235 421 |
| IAO-1004 | 1195 775 |
| IAO-1014 M | 1483 968 |
| IAO-2004 | 1195 774 |
| IAO-2004 M | 1323 925 |
| IAO-4109-1 M | 1321 787 |
| IAO-4110-1 M | 1323 899 |
| IAO-4112-1 M | 1326 533 |
| IAO-4113-1 M | 1326 532 |
| IAO-4114-1 M | 1321 788 |
| IAO-4116-1 | 1193 314 |
| IAP-9 | 1269 181 |
| IAP-23 | 1261 005 |
| IAP-3004 R | 1261 008 |
| IAP-3004 RD | 1253 295 |
| IAP-3004 RE | 1308 180 |
| IAP-4101-1 | 1233 564 |
| IAP-4101 A-1 | 1546 755 |
| IAR-8 | 1244 738 |
| IAR-1003 | 1126 570 |
| IAR-1004 R | 1244 621 |
| IAR-3004 R | 1244 620 |
| IAR-4101-1 | 1126 571 |
| IAT-6 | 1343 585 |
| IAT-7 | 1343 591 |
| IAT-14 | 1343 583 |
| IAT-24 R | 1343 582 |
| IAT-29 | 1345 705 |
| IAT-30 | 1383 641 |
| IAT-51 | 1495 568 |
| IAT-52 | 1495 565 |
| IAT-81 RE | *2084 865 |
| IAT-1033 | 1343 576 |
| IAT-2004 RA | 1343 578 |
| IAT-2004 RCS | 1752 398 |
| IAT-2004 RD | 1752 397 |
| IAT-2004 RS | 1752 398 |
| IAT-2015 RA | 1692 794 |
| IAT-2023 G | 1343 590 |
| IAT-2023 RJ | 1345 473 |
| IAT-2023 RK | 1345 383 |
| IAT-2023 RP | 1345 473 |
| IAT-2035 | 1345 223 |
| IAT-2035 A | 1495 566 |
| IAT-2050 R | 1692 793 |
| IAT-2050 RC | *1692 793 |
| IAT-2050 RS | 1495 569 |
| IAT-3076 DS | 1881 723 |
| IAT-3076 RA | 1692 794 |
| IAT-3076 LA | 1818 757 |
| IAT-4011 | 1546 755 |
| IAT-4012 | 1479 588 |
| IAT-4103 | 1689 323 |
| IAU-23 | 1269 011 |
| IAU-39 | 1271 751 |
| IAU-56 | 1271 754 |
| IAU-62 | 1394 961 |
| IAU-1016 A | 1343 587 |
| IAU-1065 | 1530 724 |
| IAU-1066 | 1390 137 |
| IAU-1069 RA | 1486 151 |
| IAU-1071 | 1394 963 |
| IAU-2058 S | 1500 968 |
| IAU-2070 S | 1500 769 |
| IAU-3076 AS | *2196 327 |
| IAU-3076 L | 1271 766 |



MyMopar.com

# AUTO-LITE

| VENDOR NUMBER | CHRYSLER NUMBER |
|---|---|
| IAU-3076 LB | 1530 726 |
| IAU-4005 UT | 1268 976 |
| IAU-4007 UT | 1391 376 |
| IAU-4016 UT | 1633 145 |
| IAU-4017 UT | 1550 585 |
| IAU-4018 UT | 1550 584 |
| IAW-24 | 1401 009 |
| IAX-2046 M | 1323 946 |
| IAX-4004-1 M | 1323 933 |
| IAX-4005-1 M | 1321 786 |
| IAY-7 | 1274 087 |
| IAY-8 | 1274 088 |
| IAY-9 | 1274 089 |
| IAY-1004 | 1274 090 |
| IAY-1019 S | 1818 727 |
| IAY-2001 B | 1818 671 |
| IAY-2012 B | 1818 760 |
| IAY-2019 | 1818 672 |
| IAY-2019 B | 1818 780 |
| IAY-2019 E | *2084 864 |
| IAY-4003-1 | 1274 066 |
| IAY-4003 B-1 | 1507 456 |
| IAY-4004 C-1 | 1788 688 |
| IAY-4004 1T | 1391 299 |
| IAY-4101-1 | 1788 688 |
| IAY-4102-1 | 1787 972 |
| IAY-4104-1 | 1788 688 |
| IAZ-7 | 1383 953 |
| IAZ-10 | 1383 958 |
| IAZ-11 S | 1527 974 |
| IAZ-13 | 1383 954 |
| IAZ-22 | 1383 955 |
| IAZ-24 | 1383 959 |
| IAZ-30 | 1440 349 |
| IAZ-31 | 1479 105 |
| IAZ-32 | 1440 360 |
| IAZ-1002 R | 1383 947 |
| IAZ-1002 RB | 1752 328 |
| IAZ-1002 RC | 1818 563 |
| IAZ-1002 RD | 1843 040 |
| IAZ-1004 R | 1383 960 |
| IAZ-1004 RA | 1689 784 |
| IAZ-1014 | 1383 948 |
| IAZ-1015 | 1383 950 |
| IAZ-1021 LB | 1879 312 |
| IAZ-1021 R | 1439 670 |
| IAZ-1021 RB | 1627 242 |
| IAZ-1021 RC | 1479 529 |
| IAZ-1021 RD | 1505 930 |
| IAZ-1021 RE | 1571 398 |
| IAZ-1021 RF | 1508 812 |
| IAZ-1021 RG | 1509 676 |
| IAZ-1021 RH | 1660 504 |
| IAZ-1021 RK | 1627 233 |
| IAZ-1021 RL | 1627 228 |
| IAZ-1021 RM | 1627 239 |
| IAZ-1021 RN | 1660 501 |
| IAZ-1021 RP | 1627 261 |
| IAZ-1021 RQ | 1671 316 |
| IAZ-1021 RU | 1752 627 |
| IAZ-1021 RV | 1843 346 |
| IAZ-1021 RW | 1879 289 |
| IAZ-1025 RA | 1818 641 |
| IAZ-1025 RB | 1843 038 |
| IAZ-1026 R | 1473 687 |
| IAZ-1026 RA | 1505 931 |
| IAZ-1026 RB | 1818 574 |
| IAZ-1026 RC | 1843 033 |
| IAZ-1028 R | 1818 820 |
| IAZ-1036 L | 1843 376 |
| IAZ-1036 LA | 1879 313 |
| IAZ-1037 L | 1879 392 |
| IAZ-1038 R | 1879 390 |
| IAZ-1039 L | 1889 397 |
| IAZ-2001 | 1818 666 |
| IAZ-2001 B | 1843 336 |
| IAZ-2004 R | 1658 610 |
| IAZ-2004 RA | 1658 610 |
| IAZ-2023 LC | 1879 314 |
| IAZ-2023 RA | 1439 671 |
| IAZ-2023 RB | 1627 234 |
| IAZ-2023 RC | 1627 262 |
| IAZ-2023 RD | 1658 620 |
| IAZ-2023 RE | 1689 773 |
| IAZ-2023 RF | 1689 765 |
| IAZ-2023 RG | 1843 034 |
| IAZ-2040 LS | 2084 080 |
| IAZ-2040 R | 2084 077 |
| IAZ-2040 RS | 2084 076 |
| IAZ-4001 A | 1479 139 |
| IAZ-4001 B | 1479 139 |
| IAZ-4001 C | 1540 552 |
| IAZ-4001 E | 1626 661 |
| IAZ-4001 F | 1641 707 |
| IAZ-4001 G | 1658 989 |
| IAZ-4002 | 1383 290 |
| IAZ-4002 A | 1540 810 |
| IAZ-4002 B | 1595 305 |
| IAZ-4002 C | 1626 658 |
| IAZ-4002 D | 1626 659 |
| IAZ-4003 A | 1540 809 |
| IAZ-4003 B | 1605 148 |
| IAZ-4003 C | 1626 656 |
| IAZ-4003 D | 1641 956 |
| IAZ-4003 F | 1641 956 |
| IAZ-4003 G | 1641 740 |
| IAZ-4003 H | 1658 870 |
| IB-654 S | 1879 282 |
| IBB-9 M | 1558 134 |
| IBB-1002 R | 1508 428 |
| IBB-1002 RM | 1558 132 |
| IBB-1024 R | 1509 681 |
| IBB-1040 | 1505 934 |
| IBB-1040 M | 1532 969 |
| IBB-2012 | 1505 932 |
| IBB-2013 | 1509 677 |
| IBB-2014 | 1508 429 |
| IBB-2014 M | 1558 133 |
| IBB-2015 L | 1663 127 |
| IBB-2015 R | 1571 394 |
| IBB-2015 RA | 1818 757 |
| IBB-2023 | 1509 682 |
| IBB-2040 | 1505 933 |
| IBB-2040 D | *1663 133 |
| IBB-2040 M | 1532 968 |
| IBB-2042 SS1 | 1818 757 |
| IBB-4001 A-1M | 1321 761 |
| IBB-4101-1M | 1486 190 |
| IBB-4101-B-1 | 1616 631 |
| IBB-4102-1 | 1402 600 |
| IBB-4102 A-1M | 1402 503 |
| IBB-4103 A | 1501 786 |
| IBB-4103 B | 1566 656 |
| IBB-4105 A | 1612 742 |
| IBB-4105 B | 1634 193 |
| IBB-4106 A-1 | 1507 047 |
| IBB-4107-1 | 1555 284 |
| IBB-4108 | 1507 048 |
| IBC-34 | 1486 150 |
| IBC-1025 R | 1614 207 |
| IBC-1035 | 1486 159 |
| IBC-4018 UT | 1550 590 |
| IBC-4019 UT | 1551 878 |
| IBC-4021 UT | 1633 140 |
| IBD-4008 UT | 1555 289 |
| IBD-4009 UT | 1555 288 |
| IBD-4014 | *1633 141 |
| IBE-1001 | 1401 001 |
| IBF-9 | 1610 370 |
| IBF-27 | 1530 735 |
| IBF-33 | 1530 736 |
| IBF-1003 | 1530 737 |
| IBF-1004 R | 1530 738 |
| IBF-1066 | 1530 739 |
| IBF-4001-UT | 1409 647 |
| IBF-4002 BUT | 1634 224 |
| IBF-4002 CUT | 1612 723 |
| IBF-4002-UT | 1614 217 |
| IBF-4004 UT | *1889 286 |
| IBG-4001 UT | 1558 149 |
| IBH-4001 UT | 1610 349 |
| IBJ-8 | 1658 538 |
| IBJ-14 | 1658 540 |
| IBJ-24 | 1658 602 |
| IBJ-1021 R | 1658 533 |
| IBJ-1021 RC | 1658 545 |
| IBJ-1021 RD | 1658 548 |
| IBJ-1021 RE | 1658 543 |
| IBJ-1021 RF | 1689 771 |
| IBJ-1021 RG | 1689 776 |
| IBJ-1021 RH | 1658 621 |

MyMopar.com

# VENDOR NUMBER CROSS REFERENCE LIST

## AUTO-LITE

| VENDOR NUMBER | CHRYSLER NUMBER |
|---|---|
| IBJ-1021 RJ | 1689 769 |
| IBJ-1021 RK | 1663 125 |
| IBJ-1021 RL | 1663 131 |
| IBJ-1021 RM | 1663 135 |
| IBJ-1021 RN | 1752 235 |
| IBJ-1021 RP | 1752 394 |
| IBJ-1021 RT | 1818 732 |
| IBJ-1021 RU | 1818 769 |
| IBJ-1021 RV | 1879 281 |
| IBJ-1048 R | 1658 603 |
| IBJ-2048 R | 1658 601 |
| IBJ-4301 | 1642 387 |
| IBJ-4301 A | 1688 647 |
| IBJ-4301 B | 1688 649 |
| IBJ-4302 C | 1704 261 |
| IBJ-4302 D | 1704 262 |
| IBJ-4303 | 1648 685 |
| IBJ-4303 C | 1704 260 |
| IBK-388 CS | *2084 866 |
| IBK-1003 | 1658 534 |
| IBK-1003 B | *2084 654 |
| IBK-1016 | 1658 535 |
| IBK-1021 R | 1658 533 |
| IBK-1027 R | 1818 665 |
| IBK-2001 | 1818 666 |
| IBK-2001 A | 1843 487 |
| IBK-4301 A | 1642 392 |
| IBK-4301 C | 1704 309 |
| IBK-4302 | 1704 310 |
| IBK-4303 | 1704 308 |
| IBK-4304 | 1689 325 |
| IBM-17 | 1879 348 |
| IBM-1004 R | 1818 735 |
| IBM-1040 | 1663 128 |
| IBM-2001 | 1818 733 |
| IBM-2001 A | 1843 475 |
| IBM-2004 RA | 1843 476 |
| IBM-2012 | 1818 821 |
| IBM-2040 | 1663 126 |
| IBM-4001 | 1663 025 |
| IBM-4001 B | 1664 956 |
| IBM-4002 | 1663 122 |
| IBM-4101 | 1785 139 |
| IBM-4101 A | 1792 703 |
| IBM-4101 B | 1793 772 |
| IBM-4102 | 1787 878 |
| IBM-4106 S | 1889 891 |
| IBO-4001 A-1 | 1664 970 |
| IBO-4002-1 | 1663 189 |
| IBO-4003 | 1665 020 |
| IBP-17 | 1818 566 |
| IBP-17 A | 1818 660 |
| IBP-17 B | 1818 730 |
| IBP-17 D | 1818 826 |
| IBP-361 BS | 1889 496 |
| IBP-2001 A | 1843 367 |
| IBP-2001 B | 1843 481 |
| IBP-2004 L | 1843 368 |
| IBP-2004 LS | 1843 369 |
| IBP-2004 R | 1818 565 |
| IBP-2004 RA | 1843 482 |
| IBP-2004 RS | 1818 567 |
| IBP-2023 L | 1843 377 |
| IBP-2023 LB | 2084 085 |
| IBP-2023 R | 1818 569 |
| IBP-2023 RA | 1818 652 |
| IBP-2023 RB | 1818 648 |
| IBP-2023 RC | 1818 642 |
| IBP-2023 RD | 1818 771 |
| IBP-2023 RE | 1879 283 |
| IBP-2040 L | 2084 079 |
| IBP-2040 R | 2084 078 |
| IBP-2209 L | 1843 378 |
| IBP-2209 LA | 1889 396 |
| IBP-2209 R | 1818 575 |
| IBP-2209 RA | 1818 570 |
| IBP-2209 RB | 1818 651 |
| IBP-2209 RC | 1818 653 |
| IBP-2209 RD | 1818 649 |
| IBP-2209 RE | 1818 655 |
| IBP-2209 RF | 1818 643 |
| IBP-2209 RG | 1818 646 |
| IBP-2209 RH | 1818 772 |
| IBP-3028 AS | 1818 568 |
| IBP-3028 BS | 1843 370 |
| IBP-4001 | 1689 320 |
| IBP-4002 | 1689 319 |
| IBP-4002 A | 1770 750 |
| IBP-4002 B | 1779 940 |
| IBP-4002 C | 1788 638 |
| IBP-4002 D | 1779 952 |
| IBP-4002 E | 1841 511 |
| IBP-4002 F | 1841 514 |
| IBP-4002 G | 1792 701 |
| IBP-4002 H | 1798 640 |
| IBP-4002 J | 1922 670 |
| IBP-4003 | 1689 318 |
| IBP-4003 A | 1779 938 |
| IBP-4003 C | 1779 951 |
| IBP-4003 E | 1842 602 |
| IBP-4003 F | 1842 607 |
| IBP-4003 G | 1842 802 |
| IBP-4003 H | 1881 942 |
| IBP-4003 J | 1889 305 |
| IBP-4003 K | 1922 654 |
| IBP-4005 B | 1842 803 |
| IBP-4006 | 1842 804 |
| IBP-4006 A | *1889 566 |
| IBP-4006 C | 1889 564 |
| IBP-4006 D | 1889 485 |
| IBR-2035 | 1818 658 |
| IBR-2050 R | 1818 659 |
| IBR-2050 RA | 1818 825 |
| IBR-2050 RS | 1818 661 |
| IBR-4001 | 1689 323 |
| IBR-4001 A | 1889 550 |
| IBR-4002 A | 1889 552 |
| IBS-30 | 1843 440 |
| IBS-38 | 1843 437 |
| IBS-39 | 1843 438 |
| IBS-1004 L | 1843 338 |
| IBS-1004 R | 1752 629 |
| IBS-2001 | 1843 439 |
| IBS-2004 L | 1843 337 |
| IBS-2004 R | 1752 628 |
| IBS-2004 RA | 1843 488 |
| IBS-2014 | 1843 442 |
| IBS-4003 B | 1842 809 |
| IBS-4004 | 1779 941 |
| IBS-4005 A | 1841 518 |
| IBS-4006 B | 1779 983 |
| IBS-4006 C | 1842 810 |
| IBS-4007 | 1838 822 |
| IBS-4007 A | 1841 515 |
| IBS-4010 | 1842 811 |
| IBS-4010 A | 1842 805 |
| IG-88 | 1126 640 |
| IG-90 | 643 892 |
| IG-514 | 643 896 |
| IG-579 A | 643 906 |
| IG-636 ES | 1627 263 |
| IG-636 KS | 1627 231 |
| IG-636 MS | 1627 237 |
| IG-636 NS | 959 310 |
| IG-636 QS | 1067 297 |
| IG-636 XS | 1473 689 |
| IG-636 YS | 1752 236 |
| IG-644 A | 1530 741 |
| IG-680 | 643 893 |
| IG-694 | 643 907 |
| IG-694 A | 1109 790 |
| IG-776 AS | 1818 669 |
| IG-784 S | 1689 772 |
| IG-863 AS | 1818 644 |
| IG-884 CS | 1879 292 |
| IG-884 DS | 1879 310 |
| IG-913 BS | 1527 975 |
| IG-913 S | 1527 976 |
| IG-1456 | 643 917 |
| IG-3927 C | 674 960 |
| IG-3927 F | 1818 891 |
| IG-3927 G | 1135 589 |
| IG-3927 K | 1136 534 |
| IGB-208 CS | 1308 243 |
| IGB-208 DS | 1889 548 |
| IGB-208 S | 674 962 |
| IGB-250 AS | 1843 035 |
| IGB-266 AS | 1689 774 |
| IGB-266 BS | 1843 379 |
| IGB-277 BS | 1604 900 |
| IGB-278 CS | *2084 887 |



MyMopar.com

# AUTO-LITE

| VENDOR NUMBER | CHRYSLER NUMBER |
|---|---|
| IGB-281 S | *2275 201 |
| IGB-292 SS | * 674 959 |
| IGB-329 S | 1527 980 |
| IGB-336 CS | 1571 399 |
| IGB-336 DS | *2084 679 |
| IGB-342 CS | 1889 608 |
| IGB-346 AS | 1627 235 |
| IGB-348 AS | 1627 243 |
| IGB-349 BS | 2084 087 |
| IGB-351 AS | 1752 326 |
| IGB-351 BS | 1818 656 |
| IGB-352 S | 1689 785 |
| IGB-353 BS | 1308 182 |
| IGB-361 AS | 1752 342 |
| IGB-361 CS | *2084 678 |
| IGB-362 AS | 1509 679 |
| IGB-363 AS | 1627 240 |
| IGB-364 AS | 1627 229 |
| IGB-369 AS | 1889 519 |
| IGB-374 AS | 1843 155 |
| IGB-374 BS | *1879 320 |
| IGB-374 CS | *1879 321 |
| IGB-374 DS | 1879 323 |
| IGB-376 AS | 1818 822 |
| IGB-379 BS | 1879 308 |
| IGB-379 DS | *2084 889 |
| IGB-381 AS | 1818 662 |
| IGB-381 BS | *2275 227 |
| IGB-385 AS | 1818 667 |
| IGB-385 BS | 1818 911 |
| IGB-386 S | 1818 736 |
| IGB-388 AS | 1818 647 |
| IGB-388 BS | 1889 602 |
| IGB-388 CS | *2084 866 |
| IGB-389 AS | 1818 750 |
| IGB-1007 | 648 404 |
| IGC-42 PS | 1689 761 |
| IGC-117 | 648 030 |
| IGC-135 | 581 598 |
| IGC-154 AS | 1658 622 |
| IGC-154 BS | 1818 684 |
| IGC-175 | 1089 084 |
| IGC-175 A | 1343 594 |
| IGC-175 B | 1473 688 |
| IGC-198 AS | 1879 287 |
| IGC-198 S | 1614 913 |
| IGC-200 AS | 1692 795 |
| IGC-200 BS | 1818 654 |
| IGC-207 BS | 1752 221 |
| IGC-210 AS | 1689 770 |
| IGC-214 S | 2084 301 |
| IGC-1107 S | 643 822 |
| IGC-1123 C | 1136 522 |
| IGC-1124 B | 1136 523 |
| IGC-1134 | 581 596 |
| IGC-1134 M | 1323 941 |
| IGC-1148 | 592 476 |
| IGC-1148 B | 1109 788 |
| IGC-2148 A | 592 475 |
| IGC-2148 G | 1136 533 |
| IGC-2168 L | 1843 380 |
| IGC-2168 R | 1271 768 |
| ICC-4508 B | 1191 589 |
| IGC-4510-1 M | 1124 876 |
| IGC-4511-1 M | 1124 874 |
| IGC-4515 A-1 | 1266 945 |
| IGC-4517-1 | 1261 411 |
| IGC-4518 A-1 | 1509 668 |
| IGE-29 AS | 1818 571 |
| IGE-29 BS | 1818 576 |
| IGH-28 | 643 899 |
| IGH-1041 | 1136 550 |
| IGL-9 A | 1369 774 |
| IGP-30 | 643 912 |
| IGP-1003 | 641 033 |
| IGP-1016 B | 868 096 |
| IGP-1046 A | 1112 347 |
| IGP-2004 B | 674 963 |
| IGP-2046 A | 1109 252 |
| IGP-3028 A | 674 236 |
| IGP-3028 ES | 699 291 |
| IGP-3028 GS | 699 292 |
| IGP-3028 VS | 1110 981 |
| IGP-3028 WS | 1112 353 |
| IGP-3028 XS | 1401 011 |
| IGP-4402 B | 1071 821 |
| IGP-4507-1 M | 1125 894 |
| IGS-17 | 643 901 |
| IGS-18 | 643 902 |
| IGS-19 S | 643 903 |
| IGS-34 | 648 029 |
| IGS-99 | 859 903 |
| IGS-104 | 860 939 |
| IGS-114 | 866 069 |
| IGS-115 M | 1323 934 |
| IGS-148 | 1135 588 |
| IGS-181 | 1261 010 |
| IGS-1016 B | 868 095 |
| IGS-1020-S | 628 921 |
| IGS-1060 R | 677 156 |
| IGS-1060 RB | 1483 969 |
| IGS-1082 RS | 1311 454 |
| IGS-1092 RS | 1253 292 |
| IGS-1100 R | 859 904 |
| IGS-1100 RA | 859 907 |
| IGS-1100 RA 3 | 1317 803 |
| IGS-1100 RAJ | 1343 588 |
| IGS-1100 RAQ | 1486 157 |
| IGS-1100 RB-3 | 1323 935 |
| IGS-1100 RBB | 1818 663 |
| IGS-1100 RBC | 1818 764 |
| IGS-1100 RA-5 | 1568 076 |
| IGS-1100 RN | 1138 512 |
| IGS-1100 RQ | 1135 596 |
| IGS-1100 RW | 959 316 |
| IGS-1100 RX | 921 275 |
| IGS-1112 R | 953 715 |
| IGS-1112 RA | 1269 131 |
| IGS-1112 RB | 1343 994 |
| IGS-1112 RC | 1323 936 |
| IGS-1112 RE | 1390 543 |
| IGS-1112 RK | 1818 778 |
| IGS-1113 R | 599 633 |
| IGS-1113 RB | 1343 589 |
| IGS-1113 RD | 1436 975 |
| IGS-1113 RE | 1390 532 |
| IGS-1124 RB | 1501 756 |
| IGS-1145 RA | 1509 678 |
| IGS-1154 RA | 1136 537 |
| IGS-1199 R | 1266 942 |
| IGS-1199 RA | 1394 900 |
| IGS-2144 | 1068 959 |
| IGS-2224 L | 2084 074 |
| IGS-2224 R | 2084 075 |
| IGS-3004 | 699 295 |
| IGS-3004 A | 699 303 |
| IGS-3004 B | 699 294 |
| IGT-11 A | 677 206 |
| IGT-69 | 1843 381 |
| IGT-70 | 863 095 |
| IGT-1002 RB | 1407 586 |
| IGT-1021 R | 1308 242 |
| IGT-1021 R-1 | 1112 349 |
| IGT-1021 RB-1 | 1323 949 |
| IGT-1021 RE-1 | 1614 201 |
| IGT-1021 RG | 861 451 |
| IGT-1021 RN | 1308 242 |
| IGT-1025 RD | 1401 026 |
| IGT-1072 RA | 1112 352 |
| IGT-1072 RE | 1407 588 |
| IGT-1072 RJ | 1407 586 |
| IGT-3004 A | 699 293 |
| IGW-3028 AS | 1879 388 |
| IGW-3028 BS | 1343 581 |
| IGW-3028 DS | 1274 092 |
| IGW-3028 JS | 1843 339 |
| IGW-3028 KS | 1658 541 |
| IGW-3028 MS | 1658 604 |
| IGW-3028 NS | 1663 129 |
| IGW-3028 PS | 1663 134 |
| IGW-3028 RS | 1879 423 |
| IGW-3028 SS | 1879 322 |
| IGW-3028 VS | 1879 504 |
| IGW-3139 | 921 274 |
| IGZ-1003 A | 960 552 |
| IGZ-1016 | 960 134 |
| IPM-4106 | 1889 666 |
| K-703 | 1826 568 |
| K-11427 | 1826 574 |
| KIT-9 | 1056 039 |
| KIT-19 | 1056 042 |



MyMopar.com

# VENDOR NUMBER CROSS REFERENCE LIST

## AUTO-LITE

| VENDOR NUMBER | CHRYSLER NUMBER |
|---|---|
| KIT-30 | 1056 041 |
| KIT-31 | 1056 040 |
| KIT-42 | 1064 633 |
| L-6301 C | 1140 836 |
| L-8192-2 | 1594 936 |
| LM-7795-2 | 1479 521 |
| MAB-12 A | 1614 940 |
| MAB-31 | 1121 742 |
| MAB-31 A | 1135 578 |
| MAB-31 C | 1818 751 |
| MAB-85 | 1121 743 |
| MAB-1024 N | 1109 742 |
| MAB-1024 NS | 1550 079 |
| MAB-2012 CS | 1614 933 |
| MAB-2012 DS | 1614 940 |
| MAB-2012 GS | 1532 990 |
| MAB-2012 HS | 1614 933 |
| MAB-2012 JS | 1614 940 |
| MAD-96 | 641 445 |
| MAD-110 | 636 840 |
| MAD-2087 | 636 861 |
| MAJ-20 | 1300 503 |
| MAK-61 A | 1110 989 |
| MAK-80 | 687 364 |
| MAT-30 | 636 818 |
| MAW-12 | 636 838 |
| MAW-13 | 636 820 |
| MAW-24 | 641 457 |
| MAW-31 | 636 842 |
| MAW-35 | 636 822 |
| MAW-37 | 636 825 |
| MAW-66 R | 648 335 |
| MAW-116 | 853 752 |
| MAW-130 | 927 093 |
| MAW-144 | 957 465 |
| MAW-161 | 1112 379 |
| MAW-1009 | 1070 933 |
| MAW-1009 B | 643 827 |
| MAW-1010 | 1070 934 |
| MAW-1010 B | 930 277 |
| MAW-2002 F | 1123 011 |
| MAW-2012 S | 927 909 |
| MAW-2030 | 641 443 |
| MAW-2064 | 648 333 |
| MAW-2064 M | 1112 928 |
| MAW-2069 M | 112 947 |
| MAW-2128 | 927 079 |
| MAW-2129 | 927 092 |
| MAW-2148 | 919 949 |
| MAW-2160 | 1112 380 |
| MAW-2179 M | 1134 127 |
| MAW-2197 | 1191 599 |
| MAW-2206 | 1195 776 |
| MAW-3002 C | 1112 941 |
| MAW-3132 | 871 754 |
| MAW-3132 A | 1261 402 |
| MAW-4008 M | 1113 864 |
| MAW-4029 | 1070 939 |
| MAW-4032 | 1070 939 |
| MAW-4041 | 1113 121 |
| MAX-35 | 636 817 |
| MAX-46 | 636 858 |
| MAX-47 | 927 078 |
| MAX-49 | 643 829 |
| MAX-64 | 683 363 |
| MAX-1007 | 636 833 |
| MAX-1007 D | 1300 513 |
| MAX-1007 F | 1300 513 |
| MAX-1008 | 643 830 |
| MAX-1009 S | 652 101 |
| MAX-1078 B | 1558 156 |
| MAX-2002 | 636 839 |
| MAX-3005 AS | 1300 513 |
| MAX-3098 | 1261 401 |
| MAX-3098 A | 1261 402 |
| MAX-4003 A | 674 900 |
| MAX-4050 | 868 857 |
| MAX-4058 | 1067 335 |
| MAX-4062 | 1075 951 |
| MAX-4085 | 1195 568 |
| MAY-12 A | 648 004 |
| MAY-12 B | 1069 966 |
| MAY-31 B | 1662 179 |
| MAY-31 C | 1662 182 |
| MAY-33 | 1069 967 |
| MAY-36 | 853 754 |
| MAY-1008 A | 852 058 |
| MAY-1009 A | 852 059 |
| MAY-1009 B | 1136 554 |
| MAY-1010 | 1069 993 |
| MAY-1010 A | 648 010 |
| MAY-1012 AS | 1069 966 |
| MAY-2010 A | 655 811 |
| MAY-2012 AS | 927 910 |
| MAY-2030 | 648 012 |
| MAY-3005 BS | 1672 729 |
| MAY-4114 A | 918 151 |
| MAY-4114 B | 918 151 |
| MAY-4131 | E-54 632-M |
| MBD-12 | 592 556 |
| MBD-12 A | 593 886 |
| MBD-13 | 592 557 |
| MBD-13 A | 593 887 |
| MBD-1007 S | 1269 242 |
| MCH-13 A | 1402 575 |
| MCH-25 A | 1390 057 |
| MCH-27 | 1369 644 |
| MCH-34 A | 1473 338 |
| MCH-34 C | 1658 551 |
| MCH-47 | 1138 519 |
| MCH-53 | 1138 527 |
| MCH-58 | 1300 508 |
| MCH-62 | 1300 509 |
| MCH-63 | 1300 506 |
| MCH-76 | 1343 711 |
| MCH-77 | 1343 710 |
| MCH-90 | 1402 587 |
| MCH-96 | 1369 645 |
| MCH-1009 B | 1138 521 |
| MCH-1009 C | 1265 707 |
| MCH-1009 E | 1665 062 |
| MCH-1010 B | 1138 522 |
| MCH-1010 C | 1265 708 |
| MCH-1010 E | 1665 062 |
| MCH-1024 | 641 457 |
| MCH-1051 | 1138 526 |
| MCH-1074 D | 1658 579 |
| MCH-1074 E | 1752 373 |
| MCH-2064 | 1265 032 |
| MCH-2070 | 1343 705 |
| MCH-2070 A | 1402 586 |
| MCH-2074 | 1343 709 |
| MCH-2074 B | 1479 692 |
| MCH-2074 C | 1523 299 |
| MCH-2074 E | 1633 159 |
| MCH-2088 | 1383 849 |
| MCH-2088 A | 1692 753 |
| MCH-2088 M | 1532 983 |
| MCH-2098 | 1390 065 |
| MCH-2099 | 1390 062 |
| MCH-2110 | 1523 306 |
| MCH-3005 BS | 1300 504 |
| MCH-3005 ES | 1665 062 |
| MCH-3005 KS | 1665 062 |
| MCH-3030 C | 1692 760 |
| MCH-3114 AS | 1752 510 |
| MCH-6106 | 1268 125 |
| MCH-6106 F | 1502 093 |
| MCH-6110 | 1509 729 |
| MCH-6201 | 1473 558 |
| MCH-6205 | 1473 558 |
| MCH-6208 M | 1535 558 |
| MCH-6209 M | 1535 557 |
| MCH-6305 | 1604 035 |
| MCJ-39 A | 1369 642 |
| MCJ-39 B | 1369 642 |
| MCL-30 | 1315 965 |
| MCL-34 | 1300 512 |
| MCL-51 | 1479 691 |
| MCL-53 | 1523 304 |
| MCL-58 | 1527 946 |
| MCL-59 | 1527 947 |
| MCL-60 | 1527 948 |
| MCL-63 | 1614 923 |
| MCL-65 | 1616 653 |
| MCL-102 | 1614 926 |
| MCL-103 | 1614 927 |
| MCL-127 | 1752 375 |
| MCL-129 | 1752 376 |
| MCL-129 A | 1889 379 |
| MCL-132 | 1752 367 |



MyMopar.com

# VENDOR NUMBER CROSS REFERENCE LIST

## AUTO-LITE

| VENDOR NUMBER | CHRYSLER NUMBER |
|---|---|
| MCL-132 A | 1889 381 |
| MCL-1010 D | 1265 712 |
| MCL-2030 | 1300 516 |
| MCL-2030 A | 1558 137 |
| MCL-2030 C | 1402 584 |
| MCL-2030 D | 1532 982 |
| MCL-2030 F | 1605 584 |
| MCL-2114 S | 1616 625 |
| MCL-3005 CS | 1300 513 |
| MCL-3075 | 1343 708 |
| MCL-3098 A | 1300 522 |
| MCL-6107 | 1311 459 |
| MCL-6109 | 1343 692 |
| MCL-6110 | 1268 126 |
| MCL-6111 | 1268 128 |
| MCL-6115 T | 1330 243 |
| MCL-6117 | 1473 187 |
| MCL-6121 A | 1527 689 |
| MCL-6124 | 1503 784 |
| MCL-6126 | 1392 684 |
| MCL-6127 M | 1405 190 |
| MCL 6128 M | 1405 191 |
| MCL-6201 M | 1488 216 |
| MCL-6202 | 1630 683 |
| MCL-6202 M | 1535 559 |
| MCL-6203 M | 1535 560 |
| MCL-6304 | 1604 480 |
| MCL-6308 | 1558 155 |
| MCL-6309 | 1616 627 |
| MCS-12 | 1394 973 |
| MCS-46 | 1343 706 |
| MCS-46 A | 1273 429 |
| MCS-47 A | 1273 430 |
| MCS-48 | 1271 780 |
| MCS-53 | 1273 423 |
| MCS-57 | 1271 788 |
| MCS-61 | 1271 781 |
| MCS-62 | 1271 789 |
| MCS-63 | 1271 790 |
| MCS-64 | 1271 791 |
| MCS-66 | 1271 782 |
| MCS-67 | 1271 792 |
| MCS-69 | 1271 793 |
| MCS-71 | 1271 783 |
| MCS-73 | 1271 794 |
| MCS-76 | 1271 784 |
| MCS-77 | 1273 424 |
| MCS-78 | 1273 419 |
| MCS-1002 | 1271 774 |
| MCS-1012 S | 1538 343 |
| MCS-1034 S | 1394 974 |
| MCS-1040 | 1273 420 |
| MCS-1049 | 1271 785 |
| MCS-1060 | 1273 421 |
| MCS-1065 | 1271 786 |
| MCS-1072 | 1273 425 |
| MCS-1073 | 1271 787 |
| MCS-1278 | 1271 775 |
| MCS-2006 F | 1271 778 |
| MCS-2012 S | 1271 776 |
| MCS-2050 | 1273 426 |
| MCS-2079 S | 1394 972 |
| MCS-2079 S-1 | 1500 972 |
| MCS-3075 | 1273 427 |
| MCT-34 B | 1752 290 |
| MCT-1010 | 1323 906 |
| MCT-2070 | 1671 293 |
| MCT-2079 M | 1614 212 |
| MCT-2088 M | 1550 624 |
| MCT-3005 BS | 1672 727 |
| MCT-6101 | 1317 790 |
| MCT-6103 | 1401 014 |
| MCT-6104 | 1323 915 |
| MCT-6105 M | 1486 137 |
| MCT-6106 M | 1486 138 |
| MCT-6202 M | 1535 562 |
| MCT-6203 M | 1535 561 |
| MCT-6301 | 1616 639 |
| MCZ-49 | 1394 988 |
| MCZ-61 | 1555 272 |
| MCZ-62 | 1394 978 |
| MCZ-64 | 1501 821 |
| MCZ-66 | 1394 979 |
| MCZ-70 | 1394 981 |
| MCZ-71 | 1394 982 |
| MCZ-73 | 1394 986 |
| MCZ-77 | 1394 989 |
| MCZ-1060 | 1394 987 |
| MCZ-1065 | 1394 983 |
| MCZ-1069 | 1394 980 |
| MCZ-1073 | 1394 985 |
| MCZ-1074 | 1394 990 |
| MCZ-2006 F | 1394 975 |
| MCZ-2050 | 1394 991 |
| MCZ-2073 | 1501 822 |
| MCZ-2097 F | 1889 382 |
| MCZ-4004 T | 1630 660 |
| MCZ-4103 T | 1484 001 |
| MCZ-4109 T | 1677 294 |
| MDC-33 | 1605 586 |
| MDC-40 | 1671 310 |
| MDC-2012 BS | 1671 317 |
| MDC-2012 CS | 1671 306 |
| MDC-6302 | 1508 761 |
| MDC-6303 T | 1630 656 |
| MDD-34 | 1752 378 |
| MDD-1005 AS | 1658 580 |
| MDD-2012 S | 1658 581 |
| MDF-16 | 1752 698 |
| MDF-25 | 1752 695 |
| MDF-26 | 1658 561 |
| MDF-27 | 1658 574 |
| MDF-30 | 1818 502 |
| MDF-31 | 1752 699 |
| MDF-1002 | 1658 554 |
| MDF-1005 AS | 1658 577 |
| MDF-1005 BS | 1662 178 |
| MDF-1005 S | 1658 562 |
| MDF-2006 | 1658 563 |
| MDF-2012 S | 1658 552 |
| MDF-2088 | 1658 555 |
| MDF-6001 | 1642 140 |
| MDF-6002 | 1642 205 |
| MDF-6003 | 1569 178 |
| MDF-6006 | 1660 844 |
| MDF-6007 | 1658 033 |
| MDF-6015 | 1665 053 |
| MDG-1005 AS | 1662 181 |
| MDG-1005 S | 1658 553 |
| MDG-6001 | 1627 289 |
| MDG-6002 | 1627 290 |
| MDG-6003 | 1569 176 |
| MDL-23 | 1752 360 |
| MDL-24 | 1752 361 |
| MDL-25 | 1752 362 |
| MDL-26 | 1752 363 |
| MDL-90 | 1818 777 |
| MDL-1002 | 1752 366 |
| MDL-1005 S | 1752 364 |
| MDL-1064 | 2084 665 |
| MDL-2006 | 1752 368 |
| MDL-2012 AS | 1843 135 |
| MDL-2012 CS | 2084 661 |
| MDL-2012 S | 1752 365 |
| MDL-2046 | 1752 421 |
| MDL-2048 | 1889 375 |
| MDL-2049 | *2084 871 |
| MDL-2070 S | 1843 383 |
| MDL-2076 S | 1843 384 |
| MDL-2084 | 2084 429 |
| MDL-2085 | 2084 658 |
| MDL-2088 | 1752 386 |
| MDL-2088 A | *2084 890 |
| MDL-2098 S | 1843 385 |
| MDL-3123 | 1752 374 |
| MDL-3132 A | 1889 378 |
| MDL-6001 | 1689 342 |
| MDL-6003 | 1689 341 |
| MDL-6004 | 1689 339 |
| MDL-6005 | 1665 101 |
| MDM-27 | 1752 383 |
| MDM-28 | 1752 384 |
| MDM-1005 S | 1752 390 |
| MDM-6001 | 1689 340 |
| MDM-6002 | 1689 338 |
| MDT-1002 | 2084 662 |
| MDT-1005 AS | 2084 660 |
| MDT-1005 S | 1879 319 |
| MDT-2005 S | 1889 614 |
| MDT-6001 | 1779 955 |
| MDT-6002 | 1770 712 |

MyMopar.com

# VENDOR NUMBER CROSS REFERENCE LIST

## AUTO-LITE

| VENDOR NUMBER | CHRYSLER NUMBER |
|---|---|
| MDT-6003 | 1842 562 |
| MDT-6005 | 1922 635 |
| MDT-6009 | 1922 641 |
| MDT-6010 | 1941 107 |
| MDT-6011 | 1941 117 |
| MDT-6012 | 1941 118 |
| MDT-7009 S | *2095 393 |
| MDU-1005 AS | 2084 668 |
| MDU-1005 S | 1879 574 |
| MDU-6001 | 1842 511 |
| MDU-6003 | 1889 260 |
| MDV-2005 S | 2084 437 |
| MEC-20 | *2084 872 |
| MEC-3061 | *2084 875 |
| MN-18 | 641 444 |
| MP-41 A | 636 845 |
| MU-54 | 641 446 |
| MU-54 A | 669 412 |
| MU-54 B | 672 641 |
| MU-54 J | 1134 130 |
| MU-54 L | 1383 663 |
| MW-20 A | 641 454 |
| MZ-12 D | 1402 583 |
| MZ-19 | 636 841 |
| MZ-19 A | 1110 986 |
| MZ-19 C | 1402 585 |
| MZ-175 | 959 467 |
| MZ-293 | 1752 385 |
| MZ-1008 | 927 967 |
| MZ-1009 | 927 968 |
| MZ-2012 AS | 1311 457 |
| MZ-2012 BS | 1345 005 |
| MZ-2012 DS | 1402 602 |
| MZ-2105 B | 1123 018 |
| MZ-2108 | 687 379 |
| MZ-2211 | 1123 019 |
| NG-10902 T | 1188 955 |
| P-6 | 1189 473 |
| PS-598 | 1921 219 |
| PS-651 | 1850 557 |
| PS-1090 S | 643 833 |
| PS-1100 | 648 334 |
| PS-1106 A | 1112 953 |
| PS-1190 | 958 179 |
| PS-1190 A | 957 468 |
| PS-1194 | 919 950 |
| PS-1194 B | 1112 382 |
| PS-1223 | 1075 947 |
| PS-1234 | 1110 000 |
| PS-1250 | 1135 587 |
| PS-1252 | 1123 012 |
| PS-1253 | 1123 020 |
| PS-1291 | 1138 528 |
| PS-1291 A | 1473 339 |
| PS-1291 D | 1550 620 |
| PS-1291 E | 1605 551 |
| PS-1291 G | 1658 556 |
| PS-1291 H | 1658 558 |
| PS-1291 L | 1752 388 |
| PS-1291 M | 1752 392 |
| PS-1291 V | 1889 376 |
| PS-1291 X | 1889 796 |
| PS-1293 A | 1300 517 |
| PS-1294 | 1265 710 |
| PS-1294 A | 1265 713 |
| PS-1294 B | 1315 966 |
| PS-1299 | 1273 431 |
| PS-1301 | 1369 646 |
| PS-1302 | 1390 063 |
| PS-1302 A | 1390 064 |
| PS-1309 A | 1479 104 |
| PS-1309 B | 2084 431 |
| PS-1312 | 1394 992 |
| PS-1316 | 1523 305 |
| PS-1316 A | 1527 932 |
| PS-1316 B | 1658 575 |
| PS-1316 C | 1752 377 |
| PS-1319 | 1505 929 |
| PS-1319 A | 1662 224 |
| PS-1319 B | 1818 744 |
| PS-1325 A | 1633 160 |
| PS-1325 B | 1889 380 |
| PS-1325 C | 2084 436 |
| PS-1332 | 1662 167 |
| PS-1338 | 1752 380 |
| PS-1342 | 1843 320 |
| PS-1343 | 1843 321 |
| PS-1350 | 1889 262 |
| PS-1354 | 2084 663 |
| PS-1355 | 2084 669 |
| PS-1361 | *2084 874 |
| PU-6 | 1370 320 |
| PU-16 | 1383 658 |
| PU-25 | 1402 504 |
| PU-26 | 1402 507 |
| PU-34 | 1440 396 |
| PU-46 | 1479 178 |
| PU-47 | 1400 997 |
| PU-52 | 1405 213 |
| PU-52 A | 1405 214 |
| PU-52 B | 1405 215 |
| PU-52 C | 1405 216 |
| PU-52 D | 1405 217 |
| PU-52 E | 1405 218 |
| PU-54 | 1479 182 |
| PU-60 | 1479 852 |
| PU-61 | 1479 853 |
| PU-67 | 1495 318 |
| PU-68 | 1495 186 |
| PU-88 | 1504 806 |
| PU-90 | 1502 703 |
| PU-94 | 1540 845 |
| PU-96 | 1540 847 |
| PU-97 | 1540 848 |
| PU-101 | 1500 336 |
| PU-102 | 1540 843 |
| PU-103 | 1505 368 |
| PU-104 | 1505 907 |
| PU-137 | 1704 270 |
| PU-142 | 1565 346 |
| PU-143 | 1565 347 |
| PU-145 | 1565 881 |
| PU-146 | 1565 888 |
| PU-147 | 1565 886 |
| PU-149 | 1565 890 |
| PU-163 | 1550 578 |
| PU-166 | 1507 931 |
| PU-167 | 1508 413 |
| PU-194 | 1704 263 |
| PU-226 | 1753 669 |
| PU-243 | 1889 848 |
| PU-244 | 1889 372 |
| PU-245 | 1889 371 |
| PU-248 | 1889 373 |
| PU-249 | 1842 610 |
| PU-251 | 1922 614 |
| PU-252 | 1922 613 |
| PU-274 | 1889 398 |
| PU-516 | *2095 610 |
| PU-517 | *2095 611 |
| PU-519 | *2095 613 |
| PU-520 | *2095 614 |
| PU-522 | *2095 615 |
| PU-523 | *2095 616 |
| PU-526 | *2095 617 |
| PU-527 | *2095 618 |
| PU-546 | *2095 387 |
| PU-1004 | 1345 973 |
| PU-1014 | 1383 502 |
| PU-1017 | 1345 974 |
| PU-1041 | 1473 213 |
| PU-1041 A | 1550 595 |
| PU-1049 | 1405 220 |
| PU-1071 | 1523 274 |
| PU-1073 | 1523 268 |
| PU-1115 | 1594 597 |
| PU-1139 | 1605 147 |
| PU-1183 | 1689 304 |
| PU-1216 | 1841 519 |
| PU-1227 | 1770 746 |
| PU-1253 | 1842 521 |
| PU-1255 | 1842 777 |
| PU-1255 A | 1889 544 |
| PU-1256 | 1842 795 |
| PU-4003 | 1689 336 |
| PU-4004 | 1818 839 |
| PU-4008 | 1842 548 |
| PU-5001 | 1842 522 |
| PW-1003 | 1553 007 |
| RAA-4001 A | 1494 798 |
| RAD-4001 | 1496 072 |



MyMopar.com

# AUTO-LITE

| VENDOR NUMBER | CHRYSLER NUMBER |
|---|---|
| RAD-4002 L | 1627 165 |
| RAD-4002 R | 1627 164 |
| RAH-4001 | 1566 350 |
| RAH-4002 | 1626 929 |
| RAH-4003 | 1843 490 |
| RAM-4001 | 1842 550 |
| RAM-4002 | 1842 546 |
| RD-19-300 | 1631 490 |
| SAA-4002 T | 1555 270 |
| SAA-4004 T | 1630 660 |
| SAD-4 | 1658 566 |
| SAD-39 | 1752 371 |
| SAD-1005 | 1658 572 |
| SAD-1005 A | 1752 370 |
| SAD-1022 | 1658 565 |
| SAD-1022 A | 2084 430 |
| SAD-4001 | 1658 985 |
| SAD-4301 | 1770 717 |
| SAD-4501 | 1889 799 |
| SAD-4502 | 2084 439 |
| SAE-4001 | 1692 658 |
| SAE-4002 | 1692 659 |
| SAE-4005 | 1889 797 |
| SAF-4001 | 1752 340 |
| SAG-4001 | 1818 738 |
| SAH-4001 | 1665 052 |
| SAJ-33 | *2084 873 |
| SAJ-4002 | *2084 876 |
| SGA-30 | 1648 008 |
| SGA-31 | 1648 009 |
| SGA-32 | 1648 007 |
| SGA-1055 | 1769 460 |
| SGA-3003 S | 1626 846 |
| SGA-3004 S | 1626 844 |
| SGA-4003 | 1605 069 |
| SGA-4013 | 1769 457 |
| SP-270 | 583 180 |
| SP-378 | 595 317 |
| SP-471 B | 1194 651 |
| SP-700 | 1138 511 |
| SP-784 | 1113 233 |
| SP-843 | 1123 540 |
| SP-887 | 1263 560 |
| SP-894 | 1194 599 |
| SP-903 | 1136 932 |
| SP-904 | 1126 616 |
| SP-939 | 1263 488 |
| SP-959 | 1311 469 |
| SP-959 A | 1402 509 |
| SP-964 | 1264 966 |
| SP-965 | 1262 993 |
| SP-966 | 1268 983 |
| SP-974 | 1319 434 |
| SP-975 | 1320 116 |
| SP-976 | 1320 117 |
| SP-983 | 1264 986 |
| SP-994 P2 | 1473 596 |
| SP-1272 A | 1450 760 |
| SP-1294 A | 1265 713 |
| SP-1299 | 678 495 |
| SP-1311 | 585 854 |
| SP-1889 | 1136 924 |
| SP-1913 | 1136 935 |
| SP-1936 | 1257 393 |
| SP-1936 A | 1402 510 |
| SP-1949 | 1297 974 |
| SP-1954 | 1264 943 |
| SP-1954 A | 1402 508 |
| SP-1977 | 1319 443 |
| SP-4016 | 924 065 |
| SPS-224 | 1689 598 |
| SPS-1005 K | 652 499 |
| SPS-1105 BB | 1089 709 |
| SPS-1105 BJ | 1163 782 |
| SPS-1105 BK | 860 195 |
| SPS-1105 BL | 860 283 |
| SPS-1105 BM | 920 402 |
| SPS-1105 BS | 1260 731 |
| SPS-1105 E | 859 992 |
| SPS-1105 F | 595 415 |
| SPS-2105 H | 926 079 |
| SPS-2155 G | 996 077 |
| SPS-2157 E | 1257 335 |
| SPS-2157 F | 595 372 |
| SPS-2157 L | 595 414 |
| SPS-2209 A | 1501 745 |
| SPS-2223 B | 1689 077 |
| SPS-2235 A | 1819 948 |
| SPS-2235 C | 1819 957 |
| SPS-2235 D | 1819 960 |
| SPS-2235 E | 1819 981 |
| SPS-2235 G | 1819 990 |
| SPS-2235 H | 1819 939 |
| SPS-2235 N | 1819 972 |
| SPS-2235 O | 1819 960 |
| SPS-2235 R | 1819 975 |
| SPS-2235 U | 1819 987 |
| SS-13 | 1135 614 |
| SS-54 | 652 122 |
| SS-61 | 636 866 |
| SS-149 L | 587 382 |
| SS-176 | 861 494 |
| SS-239 | 1315 968 |
| SS-1058 | 1692 774 |
| SS-2124 | 675 955 |
| SS-2124 E | 861 499 |
| SS-2124 M | 1315 967 |
| SS-2124 N | 1323 909 |
| SS-3035 RAA | 871 759 |
| SS-3035 RAE | 1115 389 |
| SS-3035 RAH | 1315 969 |
| SS-3070 R | 636 863 |
| SS-3070 RD | 861 500 |
| SS-4001 | 648 336 |
| SS-4003 | 1121 741 |
| SS-4020 | 927 081 |
| SS-4204 A | 863 124 |
| SS-4214 | 1323 908 |
| SS-4704 | 871 758 |
| SS-4705 | 957 467 |
| SS-4706 | 1115 382 |
| SS-4707 | 1300 507 |
| SS-4708 | 1315 970 |
| SSB-38 | 1343 593 |
| SSB-43 | 1262 359 |
| SSP-4001 M | 1075 941 |
| SSP-4003 M | 1488 227 |
| SSR-4002 M | 1553 029 |
| SSS-4003 | 1126 633 |
| SST-4007 | 1383 605 |
| SST-4013 | 1605 435 |
| SST-4013 A | 1605 499 |
| SSX-13 | 1752 372 |
| SSX-21 | 1345 007 |
| SSX-22 | 1345 006 |
| SSX-25 | 1345 021 |
| SSX-26 | 1345 018 |
| SSX-28 | 1345 020 |
| SSX-35 | 1369 648 |
| SSX-37 | 1369 652 |
| SSX-57 | 1479 683 |
| SSX-1004 | 1495 598 |
| SSX-1024 | 1495 598 |
| SSX-4002 | 1495 598 |
| SSX-4003 | 1495 598 |
| SSX-4004 | 1529 144 |
| SSX-4101 | 1343 695 |
| SSX-4103 | 1671 279 |
| SSX-4103 T | 1402 588 |
| SSX-4104 | 1633 158 |
| SSX-4104 T | 1752 482 |
| SSY-1043 | 1404 639 |
| SSY-4002 | 1498 878 |
| SSY-4101 | 1671 312 |
| SSY-4101 T | 1402 599 |
| SSY-4102 | 1671 294 |
| SSY-4102 T | 1616 654 |
| SW-213 | 1689 763 |
| SW-634 | 120 387 |
| SW-634 | 120 392 |
| SW-764 S | 1501 797 |
| SW-2813 | 641 462 |
| SW-2827 | 1390 061 |
| TC-51 U | 685 817 |
| TG-22 | 958 336 |
| TG-32 | 1495 519 |
| TG-88 | 1126 640 |
| TG-2075 D | 1297 999 |
| TG-4002 R | 867 075 |
| TGG-11 | 1473 110 |
| TGG-12 | 1473 109 |


MyMopar.com

# VENDOR NUMBER CROSS REFERENCE LIST

## AUTO-LITE

| VENDOR NUMBER | CHRYSLER NUMBER |
|---|---|
| TGG-14 | 1473 108 |
| TGG-14 A | 1473 107 |
| TGG-14 C | 1473 106 |
| TGG-19 | 1473 104 |
| TGG-4001 | 1370 204 |
| VAD-116 A | 1273 383 |
| VAD-117 A | 1273 384 |
| VAD-166 A | 1273 461 |
| VAD-176 | 1273 462 |
| VAD-1118 | 1273 385 |
| VAT-6201 A | 1662 137 |
| VAV-1022 | 1406 639 |
| VAV-6002 B | 1343 575 |
| VAV-6003 AT | 1326 571 |
| VAV-7006 AT | 1532 966 |
| VBA-4203 A | 1268 222 |
| VBA-6002 AM | 1321 757 |
| VBC-2 | 1273 463 |
| VBC-18 | 1273 473 |
| VBC-19 | 1273 464 |
| VBC-21 | 1273 465 |
| VBC-22 | 1273 474 |
| VBC-23 | 1273 363 |
| VBC-25 | 1273 364 |
| VBC-30 | 1273 466 |
| VBC-31 | 1273 467 |
| VBC-40 | 1273 365 |
| VBC-42 | 1273 366 |
| VBC-46 | 1273 469 |
| VBC-47 | 1273 367 |
| VBC-57 | 1394 890 |
| VBC-64 | 1394 892 |
| VBC-1016 | 1273 470 |
| VBC-1029 | 1273 386 |
| VBC-1036 A | 1273 368 |
| VBC-1040 S | 1273 471 |
| VBC-1044 | 1273 369 |
| VBC-1052 | 1394 889 |
| VBC-1055 | 1273 374 |
| VBC-1061 | 1273 376 |
| VBC-1080 | 1273 377 |
| VBC-3008 | 1273 375 |
| VBC-3070 | 1273 381 |
| VBC-3071 | 1273 390 |
| VBC-4002 UT | 1268 962 |
| VBE-6001 AF | 1502 074 |
| VBE-6001 AT | 1330 242 |
| VBF-6001 A | 1343 122 |
| VBF-6002 A | 1343 124 |
| VBF-6005 T | 1534 162 |
| VBF-6201 A | 1641 510 |
| VBJ-6001 AT | 1486 145 |
| VBO-4202 AC | 2095 200 |
| VBO-4202 BC | *1889 944 |
| VBO-4202 DC | 2095 201 |
| VBO-4202 HC | 2095 202 |
| VBO-4202 JC | 2095 203 |
| VBO-4202 KC | 2095 204 |
| VBO-4202 LC | 2095 205 |
| VBO-4202 MC | 2095 206 |
| VBO-4402 ATC | 2095 207 |
| VBO-4602 AC | 2095 208 |
| VBO-4602 BC | 2095 209 |
| VBO-4602 BTC | 2095 210 |
| VBO-4602 EC | 2095 211 |
| VBO-4602 FC | 2095 212 |
| VBO-4602 GC | 2095 213 |
| VBO-4602 KC | 2095 214 |
| VBO-4602 LC | 2095 215 |
| VBO-4602 MC | 2095 216 |
| VC-14 | 691 707 |
| VC-15 | 1345 705 |
| VC-45 | 691 712 |
| VC-46 | 691 709 |
| VC-46 A | 691 708 |
| VC-46 B | 691 710 |
| VC-55 | 691 713 |
| VC-76 | 1345 483 |
| VC-90 | 1689 789 |
| VC-115 | 1439 672 |
| VC-149 | 1689 767 |
| VC-150 | 1689 788 |
| VC-155 | 1818 912 |
| VC-167 | 1527 977 |
| VC-169 | 1752 220 |
| VC-174 | 1689 778 |
| VC-175 | 1818 668 |
| VC-176 | 1752 220 |
| VC-177 | 1818 572 |
| VC-178 | 1818 650 |
| VC-179 | 1818 645 |
| VC-180 | 1843 036 |
| VC-181 | 1879 291 |
| VC-182 | 1879 286 |
| VC-183 | 1879 315 |
| VC-1039 A | 1135 574 |
| VC-2082 R | 1135 576 |
| VC-2117 R | 1135 577 |
| VC-3147 | 1261 011 |
| VP-19 | 137 423 |
| VRA-15 | 927 950 |
| VRA-16 | 927 951 |
| VRA-17 | 927 952 |
| VRA-46 | 928 566 |
| VRA-1060 A | 1273 380 |
| VRH-51 | 1402 513 |
| VRH-4104 D1 | 913 344 |
| VRH-7107 B-1T | 1401 019 |
| VRP-100 D | 1273 388 |
| VRP-100 E | 1273 389 |
| VRP-100 K | 1394 891 |
| VRP-4001 B | 1195 738 |
| VRP-4303 DM | 1571 164 |
| VRP-4503 AX | 1121 978 |
| VRP-4503 BX | 1641 510 |
| VRP-4503 M | 1571 161 |
| VRS-6001 AM | 1321 758 |
| VRS-6003 AM | 1109 771 |
| VRS-6004 AM | 1484 000 |
| VRU-6001 AM | 1553 027 |
| VRU-6001 BM | 1550 611 |
| VRU-6002 AM | 1553 028 |
| VRU-6002 BM | 1550 579 |
| VRW-6003 AM | E-71249-M |
| VRW-6004 BM | 1535 592 |
| VRW-6006 AM | 1553 024 |
| VRW-6007 AM | 1553 030 |
| VRX-6003 A | 1496 058 |
| VRX-6003 C | 1660 457 |
| VRS-6201 A | 1941 112 |
| VRS-6010 A | 1889 607 |
| VRX-6201 A | 1642 333 |
| VRX-6301 A | 1842 798 |
| VRY-4203 G | 922 487 |
| WL-5 | 1343 480 |
| WL-21 | 1343 485 |
| WL-22 | 1343 484 |
| WL-1008 | 1343 474 |
| WL-2001 | 1343 470 |
| WLB-8 | 6006 065 |
| WLB-9 | 1383 351 |
| WLB-12 | 1256 337 |
| WLB-22 | 1473 042 |
| WLB-83 | 1473 010 |
| WLB-94 | 1440 596 |
| WLB-105 | 1479 866 |
| WLB-108 | 1523 217 |
| WLB-110 | 1540 188 |
| WLB-111 | 6008 110 |
| WLB-162 | 1479 866 |
| WLB-168 | 1689 167 |
| WLB-179 | 6006 070 |
| WLB-1079 L | 1473 013 |
| WLB-1102 LS | 1479 480 |
| WLB-1102 RS | 1479 479 |
| WLB-2087 L | 1473 048 |
| WLB-2120 L | 1622 347 |
| WLB-2120 R | 1622 346 |
| WLB-2124 L | 1604 904 |
| WLB-2124 R | 1604 903 |
| WLB-2128 L | 1622 340 |
| WLB-2128 R | 1622 339 |
| WLB-2172 L | 1753 837 |
| WLB-2172 R | *1753 836 |
| WLB-3022 LS | 1658 769 |
| WLB-3022 RS | 1658 768 |
| WLB-3079 L | 1473 017 |
| WLB-3079 R | 1473 012 |
| WLB-3087 L | 1604 888 |
| WLB-3087 R | 1819 169 |
| WLB-3090 L | 1440 508 |



MyMopar.com

# AUTO-LITE

| VENDOR NUMBER | CHRYSLER NUMBER |
|---|---|
| WLB-3090 LB | 1604 451 |
| WLB-3090 LC | 1604 937 |
| WLB-3090 R | 1440 507 |
| WLB-3090 RB | 1604 450 |
| WLB-3090 RC | 1604 936 |
| WLB-3090 RH | 1704 714 |
| WLB-3090 LH | 1704 715 |
| WLB-3101 L | 1479 492 |
| WLB-3101 LB | 1605 212 |
| WLB-3101 R | 1479 491 |
| WLB-3101 RB | 1605 211 |
| WLB-3132 L | 1819 166 |
| WLB-3132 R | 1604 883 |
| WLB-3173 L | 1753 707 |
| WLB-3173 R | 1753 706 |
| WLB-3173 LA | 1753 239 |
| WLB-3173 RA | 1753 238 |
| WLB-3174 L | 1819 166 |
| WLB-3174 R | 1819 167 |
| WLB-3175 L | 1819 168 |
| WLB-3175 R | 1819 169 |
| WLB-3178 L | 1753 241 |
| WLB-3178 R | 1753 240 |
| WLB-3180 L | 1753 351 |
| WLB-3180 R | 1753 350 |
| WLB-3190 L | 1770 025 |
| WLB-3190 R | 1770 024 |
| WLB-3191 L | 1770 033 |
| WLB-3191 R | 1770 032 |
| WLB-3200 | 1779 233 |
| WLB-3211 L | 1810 787 |
| WLB-3211 R | 1810 786 |
| WLC-2033 | 1479 757 |
| WLC-3079 L | 1495 343 |
| XA-548 R | 647 165 |
| XA-584 | 137 407 |
| XA-595 A | 120 367 |
| XA-646 | 110 309 |
| XA-699 | 1273 370 |
| XA-736 | 1122 042 |
| XA-744 AA | *2240 735 |
| XA-744 C | 1273 428 |
| XA-744 F | 1391 931 |
| XA-744 G | 1271 770 |
| XA-744 J | 1273 458 |
| XA-744 K | 1273 459 |
| XA-744 L | 1273 460 |
| XA-744 M | 1271 777 |
| XA-744 N | 1273 378 |
| XA-744 P | 1271 771 |
| XA-744 S | 1394 984 |
| XA-748 | 1271 772 |
| XA-751 | 1271 765 |
| XA-765 | 1273 387 |
| XA-766 | 1273 379 |
| XA-767 | 1273 434 |
| XA-767 A | 1501 831 |
| XA-770 | 1273 391 |
| XA-773 | 1527 254 |
| XA-776 | 1273 435 |
| XA-777 | 1273 436 |
| XA-782 | 1273 372 |
| XA-783 | 1273 373 |
| XA-785 | 1383 347 |
| XA-794 | 1405 225 |
| XA-801 | 1091 629 |
| XA-803 | 1440 489 |
| XA-803 A | 1688 919 |
| XA-815 | 1594 834 |
| XA-823 A | 1616 612 |
| XA-827 | 903 895 |
| XA-836 A | 1753 285 |
| XA-839 | 1689 763 |
| XA-863 | 1818 815 |
| XA-879 | 1818 910 |
| XA-903 | *2095 627 |
| XH-119705 | 1819 054 |
| 8X-53 | 132 764 |
| 8X-55 | 121 832 |
| 8X-63 | 133 482 |
| 8X-66 | 133 634 |
| 19X-93 | 180 079 |
| 8X-97 | 126 078 |
| 8X-135 | 121 328 |
| 19X-141 | 120 622 |
| 8X-146 | 120 375 |
| 8X-147 | 120 376 |
| 8X-158 | 120 371 |
| 8X-159 | 120 369 |
| X-163 A | 113 739 |
| 8X-163 | 120 375 |
| X-176 | 113 103 |
| 8X-189 B | 1473 066 |
| 12X-193 | 120 380 |
| X-194 | 131 044 |
| 12X-194 | 131 044 |
| X-195 | 138 530 |
| 8X-195 | 138 530 |
| X-198 | 120 384 |
| 12X-198 | 120 384 |
| X-199 | 131 098 |
| 8X-199 | 120 380 |
| 12X-199 | 120 380 |
| 12X-199 | 131 098 |
| X-204 | 131 045 |
| X-204 | 131 206 |
| X-258 | 106 749 |
| 19X-258 | 106 749 |
| X-263 | 103 906 |
| X-295 | 602 454 |
| X-295 A | 1889 235 |
| 8X-323 | 121 839 |
| 8X-361 | 120 392 |
| 19X-361 | 120 392 |
| X-378 | 620 528 |
| X-382 | 105 036 |
| X-382 A | 1110 972 |
| X-404 | 121 244 |
| X-441 | 659 799 |
| X-489 | 113 702 |
| X-525 | 135 694 |
| 8X-645 | 132 696 |
| 19X-709 | 1321 110 |
| 8X-712 | 661 825 |
| 8X-714 | 132 930 |
| 6X-832 | 120 368 |
| 8X-832 | 120 368 |
| X-842 | 126 049 |
| 8X-859 | 192 484 |
| X-865 A | 143 932 |
| 8X-872 | 132 096 |
| 8X-878 | 131 974 |
| 19X-884 | 131 949 |
| 8X-888 | 131 958 |
| 8X-902 | 132 105 |
| 19X-902 | 132 105 |
| 8X-905 | 132 251 |
| 19X-905 | 132 251 |
| X-931 | 1274 093 |
| 8X-1002 | 120 628 |
| 8X-1014 | 120 214 |
| 8X-1063 | 120 367 |
| 10X-1063 | 120 367 |
| X-1134 | 131 016 |
| X-1177 | 138 502 |
| X-1284 | 138 485 |
| 8X-1376 | 120 368 |
| X-1379 | 1273 422 |
| X-1448 | 135 761 |
| X-1491 | 147 686 |
| 19X-1494 | 132 764 |
| X-1512 | 1879 391 |
| X-1520 | 147 685 |
| X-1543 | 431 942 |
| 8X-1543 | 431 942 |
| X-1560 | 136 008 |
| 8X-1576 | 120 392 |
| X-1583 | 863 816 |
| X-1590 | 953 717 |
| X-1610 | 120 368 |
| X-1625 | 1495 525 |
| X-1649 | 114 545 |
| X-1711 | 174 916 |
| 8X-1711 | 174 916 |
| 12X-1711 | 174 916 |
| 8X-2843 | 114 546 |
| X-2845 | 134 570 |
| 8X-2848 | 132 518 |
| X-2872 | 113 337 |
| X-2878 | 151 375 |
| X-2940 | 1302 747 |


MyMopar.com

# VENDOR NUMBER CROSS REFERENCE LIST

## AUTO-LITE

| VENDOR NUMBER | CHRYSLER NUMBER |
|---|---|
| X-2943 | 113 337 |
| X-2955 | 1394 893 |
| X-2990 | 151 509 |
| X-3003 | 1630 649 |
| X-3008 | 200 156 |
| X-3009 | 200 162 |
| X-3012 | 1343 592 |
| 8X-3017 | 132 915 |
| 8X-3027 | 131 954 |
| X-3028 | 151 511 |
| X-3031 | 131 949 |
| X-3032 | 151 510 |
| X-3037 | 1273 442 |
| X-3038 | 1273 456 |
| X-3049 | 151 524 |
| X-3050 | 151 506 |
| X-3051 | 151 507 |
| X-3053 | 151 517 |
| X-3054 | 151 518 |
| X-3055 | 151 519 |
| X-3060 | 178 469 |
| X-3063 | 140 879 |
| 8X-3277 | 1818 501 |
| 12X-3074 | 120 380 |
| X-3075 | 120 375 |
| X-3090 | 151 504 |
| 16X-3094 | 131 958 |
| X-3135 | 1479 097 |
| X-3155 | 1405 223 |
| X-3187 | 1483 522 |
| X-3217 | 113 103 |
| X-3218 | 1527 971 |
| X-3226 | 1552 884 |
| 8X-3280 | 1752 696 |
| 8X-3284 | 1752 697 |
| X-3316 | 1770 296 |
| YRS-6009 AM | 1672 803 |
| 90-23 | 1879 604 |
| 90-24 | 1879 594 |
| 90-25 | 1879 595 |
| 90-26 | 1879 596 |
| 90-27 | 1879 597 |
| 90-28 | 1879 605 |
| 90-29 | 1879 606 |
| 90-30 | 1879 607 |
| 90-31 | 1879 613 |
| 90-32 | 1881 721 |
| 90-33 | 1881 722 |
| 90-34 | 1879 598 |
| 90-35 | 1879 599 |
| 90-36 | 1879 601 |
| 90-37 | 1879 602 |
| 90-39 | 1881 747 |
| 90-41 | 1881 752 |
| 90-44 | 1881 766 |
| 90-45 | 1881 749 |
| 90-46 | 1881 768 |
| 90-47 | 1881 929 |
| 90-48 | 1879 603 |
| 90-49 | 1881 727 |
| 90-50 | 1881 728 |
| 90-51 | 1879 611 |
| 90-52 | 1879 612 |
| 90-54 | 1881 726 |
| 90-55 | 1881 724 |
| 90-56 | 1881 751 |
| 90-57 | 1881 737 |
| 90-58 | 1881 756 |
| 90-59 | 1881 748 |
| 90-60 | 1881 746 |
| 90-61 | 1881 754 |
| 90-62 | 1881 755 |
| 90-64 | 1881 753 |
| 90-65 | 1881 719 |
| 90-66 | 1881 720 |
| 90-67 | 1881 741 |
| 90-68 | 1881 740 |
| 90-69 | 1881 745 |
| 90-70 | 1881 744 |
| 90-71 | 1881 743 |
| 90-75 | 2084 083 |
| 90-76 | 2084 081 |
| 90-78 | 2084 294 |
| 90-79 | 2084 302 |
| 90-80 | 2084 303 |
| 90-81 | 2084 432 |
| 90-82 | 2084 433 |
| 90-83 | 2084 434 |
| 90-85 | 2084 435 |
| 90-92 | *2084 638 |
| 90-94 | 2084 666 |
| 90-95 | 2084 667 |
| 90-96 | *2084 655 |
| 90-97 | *2084 656 |
| 90-99 | *2084 680 |
| 90-101 | *2084 853 |
| 90-102 | *2084 854 |
| 90-103 | *2084 867 |
| 90-104 | *2084 868 |
| 90-105 | *2084 869 |
| 90-106 | *2084 870 |
| 90-107 | *2084 877 |
| 90-108 | *2084 878 |
| 90-109 | *2084 879 |
| 90-110 | *2084 880 |
| 90-111 | *2084 881 |
| 90-113 | *2084 888 |
| 90-115 | *2196 330 |
| 90-135 | *2275 226 |
| 90-143 | *2275 225 |
| 90-155 | *2084 869 |
| 2012 BS | 2084 291 |
| 6010 S | 1658 865 |
| 9738 A | 595 361 |
| 9739 A | 595 362 |
| 10857 A | 1154 216 |
| 10870 | 652 115 |
| 13851 A | 1566 398 |
| 10873 A | 1149 337 |
| 10886 A | 1154 292 |
| 11385 A | 1194 576 |
| 11397 A | 1195 746 |
| 11398 A | 1195 747 |
| 11399 A | 1195 741 |
| 11400 A | 1195 745 |
| 11401 A | 1195 742 |
| 11434 A | 1195 709 |
| 11450 A | 1195 743 |
| 11451 A | 1195 744 |
| 11526 A | 1261 467 |
| 11538 A | 1240 864 |
| 11607 A | 1257 287 |
| 11610 A | 1257 270 |
| 11652 A | 1263 499 |
| 11680 A | 1302 621 |
| 11681 A | 1302 620 |
| 11721 A | 1253 112 |
| 11728 A | 1302 632 |
| 11729 A | 1302 630 |
| 11803 A | 1310 864 |
| 11821 A | 1257 602 |
| 11822 A | 1257 604 |
| 12013 A | 1339 675 |
| 12014 A | 1339 674 |
| 12038 A | 1339 934 |
| 12103 A | 1340 309 |
| 12104 A | 1340 310 |
| 12106 A | 1340 312 |
| 12109 A | 1340 314 |
| 12110 A | 1340 315 |
| 12127 A | 1340 299 |
| 12129 A | 1340 300 |
| 12132 A | 1339 805 |
| 12139 A | 1339 824 |
| 12306 A | 1369 698 |
| 12307 A | 1369 699 |
| 12309 A | 1369 696 |
| 12310 A | 1369 697 |
| 12323 A | 1383 780 |
| 12328 A | 1369 753 |
| 12348 A | 1271 228 |
| 12356 A | 1390 545 |
| 12379 A | 1436 174 |
| 12380 A | 1436 175 |
| 12412 A | 1272 352 |
| 12414 A | 1272 351 |
| 12415 A | 1272 353 |
| 12474 A | 1383 413 |
| 12783 A | 1473 848 |
| 12818 A | 1473 882 |
| 13091 A | 1495 806 |



MyMopar.com

# AUTO-LITE

| VENDOR NUMBER | CHRYSLER NUMBER |
|---|---|
| 13380 A | 1546 502 |
| 13384 A | 1546 621 |
| 13400 A | 1604 704 |
| 13433 A | 1546 127 |
| 13455 A | 1571 827 |
| 13514 A | 1571 704 |
| 13535 A | 1571 705 |
| 13541 A | 1571 524 |
| 13615 A | 1550 103 |
| 13630 A | 1509 659 |
| 13678 A | 1660 852 |
| 13683 A | 1594 753 |
| 13706 A | 1604 698 |
| 13710 A | 1604 705 |
| 13726 A | 1604 729 |
| 13739 A | 1604 228 |
| 13740 A | 1604 229 |
| 13752 A | 1622 135 |
| 13754 A | 1622 622 |
| 13778 A | 1604 808 |
| 13851 A | *1566 398 |
| 13912 A | 1566 399 |
| 13964 A | 1569 117 |
| 13965 A | 1569 118 |
| 13989 A | 1648 760 |
| 14018 A | 1648 566 |
| 14019 A | 1648 567 |
| 14039 A | 1658 102 |
| 14040 A | 1658 103 |
| 14041 A | 1658 104 |
| 14044 A | 1627 484 |
| 14071 A | 1660 852 |
| 14072 A | 1660 853 |
| 14073 A | 1660 854 |
| 14195 A | 1658 825 |
| 14196 A | 1648 811 |
| 14200 A | 1648 819 |
| 14201 A | 1648 830 |
| 14202 A | 1648 820 |
| 14203 A | 1648 822 |
| 14204 A | 1648 821 |
| 14208 A | 1663 046 |
| 14235-A | 1689 411 |
| 14259 | 1753 797 |
| 14263 A | 1753 599 |
| 14265 A | 1753 590 |
| 14266 A | 1753 593 |
| 14272 A | 1818 830 |
| 14280 A | 1663 235 |
| 14286 A | 1753 753 |
| 14290 A | 1753 754 |
| 14291 A | 1753 756 |
| 14294 A | 1753 744 |
| 14296 A | 1753 769 |
| 14297 A | 1753 766 |
| 14298 A | 1753 759 |
| 14299 A | 1753 771 |
| 14309-A | 1819 281 |
| 14310 A | 1819 282 |
| 14321 A | 1819 293 |
| 14322 A | 1819 294 |
| 14323 A | 1819 295 |
| 14324 A | 1819 296 |
| 14331 A | 1779 532 |
| 14336 A | 1779 551 |
| 14374 A | 1838 044 |
| 14375 A | 1838 043 |
| 14376 A | 1838 045 |
| 14377 A | 1838 046 |
| 14406 A | 1770 093 |
| 14433 A | 1663 236 |
| 14580 A | *1788 621 |
| 14581 A | 1788 622 |
| 14906-A | 1798 594 |
| 14907 A | 1798 595 |
| 14915 A | 1798 610 |
| 14921 A | 1923 544 |
| 15007 A | 1798 750 |
| 20702 | 939 548 |
| 23178 | 1154 399 |
| 24037 | 1263 532 |
| 24448 | 1310 382 |
| 24511 | 1300 980 |
| 25062 | 1753 800 |
| 25091 | 1369 682 |
| 25427 | 1436 163 |
| 25456 | 1436 131 |
| 25611 | 1272 373 |
| 26408 | 1394 272 |
| 27045 | 1622 819 |
| 27123 | 1622 832 |
| 27174 | 1605 003 |
| 27189 | 1605 004 |
| 27235 | 1626 882 |
| 27236 | 1626 881 |
| 27275 | 1626 968 |
| 27887 | 1753 739 |
| 27934 | 1769 113 |
| 27935 | 1769 112 |
| 28673 | 1819 429 |
| 28703 | 1819 430 |
| 28704 | 1819 431 |
| 28707 | 1819 438 |
| 28849 | 1819 223 |
| 28997 | 1788 624 |
| 29005 | 1788 627 |
| 72200 | 1658 838 |
| 200477 | *1818 836 |
| 200847 | *2084 847 |
| 301178 | 1842 818 |
| 435361 B | 1273 355 |
| 910897 | 1565 354 |
| 915009 | *1889 545 |


MyMopar.com

# VENDOR NUMBER CROSS REFERENCE LIST

| VENDOR NUMBER | CHRYSLER NUMBER | VENDOR NUMBER | CHRYSLER NUMBER | VENDOR NUMBER | CHRYSLER NUMBER |
|---|---|---|---|---|---|

## NOTES



MyMopar.com