CHRYSLER

PASSENGER CAR PARTS CATALOG

"A" SERIES
1965
PLYMOUTH
BELVEDERE
VALIANT
DODGE
CORONET
DART
CHRYSLER
IMPERIAL

MARCH 1966

PARTS DIVISION CHRYSLER MOTORS CORPORATION

DETROIT, MICHIGAN 48231

Pages	
INF-1	General Information
PK-1	Parts Packages
PT-1	Police - Taxi
1-1	Group 1 Accessories
2-1	Group 2 Front Suspension
3-1	Group 3 Axle - Rear
4-1	Group 4 Brake - Parking
5-1	Group 5 Brake - Service
6-1	Group 6 Clutch
7-1	Group 7 Cooling
8-1	Group 8 Electrical
9-1	Group 9 Engine
10-1	Group 10 Engine Oiling
11-1	Group 11 Exhaust
12-1	Group 12 Fenders and Sheet Metal
13-1	Group 13 Frame
14-1	Group 14 Fuel
15-1	Group 15 Hood
16-1	Group 16 Prop. Shaft & Univ. Jt.
17-1	Group 17 Springs
18-1	Group 18 Standard Parts
19-1	Group 19 Steering
21-1	Group 21 Transmission
22-1	Group 22 Wheels
23-1	Group 23 Body
IT-1	Group 23 Interior Trim
24-1	Group 24 Air Conditioning
AL-1	Alphabetical Index
NU-1	Numerical Index
X-1	Vendor Cross Reference

81-690-0623
SUPERSEDES
81-690-0573

MyMopar.com

INDEX TO INFORMATION PAGES

	PAGE NO.
ABBREVIATIONS	INF- 9
ALPHABETICAL INDEX	INF-10
CERTICARD	INF- 5
COLOR CODED OR MIXED PART NUMBERS	INF-13
COLORED PAGE IDENTIFICATION	INF-11
ENGINE IDENTIFICATION NUMBERS	INF- 8
HOW TO LOCATE PARTS	INF-12
ILLUSTRATION INDEX	INF-14
ILLUSTRATIONS	INF-10
INTERFILING REVISION PAGES	INF-12
MODEL CODES	INF- 3
MODEL SPECIFICATIONS VALIANT PLYMOUTH DART DODGE CHRYSLER IMPERIAL	INF- 6
NUMERICAL INDEX	INF-10
ORDERING INFORMATION	INF-13
PAGE NUMBERING	INF-11
PARTS CATALOG REVISION SERVICE	INF-12
PARTS PACKAGES	INF-11
PART TYPE CODE SYSTEM	INF-11
SERIAL NUMBERS	INF- 4
SPECIFYING INFORMATION	INF-12
STANDARD PARTS	INF-11
SYMBOLS USED IN THIS CATALOG	INF- 8

MyMopar.com

GENERAL INFORMATION

This publication contains parts information for 1965 Plymouth, Valiant, Dodge, Dart, Chrysler and Imperial Passenger Cars. In the event replacement parts which are not listed are required, they may be ordered by description or Part Type Code, giving the model and vehicle serial number to which they apply.

Trim items, such as seat backs, seat cushions and trimming materials are listed in Group 23 - Interior Trim which will be provided in a separate loose leaf section and should be ordered by part number, description and car vehicle serial number. A special Trim Order Form is provided to expedite trim material orders. Paint and trim options are supplied in "Order Code List, Body Colors and Trim Options". Refer to this publication for complete information when required.

A Numerical and an Alphabetical Index are provided.

The use of this Parts Catalog and the arrangement of information therein is explained in the General Information Section.

1965 PASSENGER CAR MODEL CODES

Throughout this catalog "Model Codes" are used where it is necessary to clarify the model application of listed part numbers.

Complete model codes are described below, however, the series letter (A for 1965) is not repeated in the text of the catalog.

Example: (AD2-H, below) -- 1965 Dodge, 8 Cylinder, Custom 880.

AD2-H

SERIES	
A	1965

CAR LINE	CHASSIS 1	CHASSIS 2	CHASSIS 3	PRICE CLASS L Low	PRICE CLASS M Medium	PRICE CLASS H High	PRICE CLASS P Premium
V Valiant	6 Cyl.	8 Cyl.		V-100		V-200	Signet
P Plymouth 119"	6 Cyl.	8 Cyl.		Fury I	Fury II	Fury III	Sport Fury
R Plymouth 116"	6 Cyl.	8 Cyl.		Belvedere I		Belvedere II	Satellite
L Dart	6 Cyl.	8 Cyl.		Dart		Dart 270	Dart GT
W Dodge 117"	6 Cyl.	8 Cyl.		Coronet		Coronet 440	Coronet 500
D Dodge 121.5"		All		Polara		Custom 880	Monaco
C Chrysler	Newport	300	New Yorker	Newport	300	New Yorker	300L
Y Imperial	All				Crown	Le Baron	

MyMopar.com

1965 PASSENGER CAR SERIAL NUMBERS

All assembly plants use a uniform method for assigning vehicle serial numbers. This number consists of 10 digits which may be interpreted as indicated below.

Example: Valiant, V100, 1965, produced at Hamtramck Assembly Plant, first vehicle built.

1 1 5 2 500 001

1st Digit

2nd Digit

3rd Digit

4th Digit

Digits 5-10

CAR LINE		
1	Valiant	6 Cyl.
V	Valiant	8 Cyl.
2	Dart	6 Cyl.
L	Dart	8 Cyl.
3	Plymouth 116″	6 Cyl.
R	Plymouth 116″	8 Cyl.
4	Dodge 117″	6 Cyl.
W	Dodge 117″	8 Cyl.
5	Plymouth 119″	6 Cyl.
P	Plymouth 119″	8 Cyl.
D	Dodge 121.5″	
C	Chrysler	
Y	Imperial	

MODEL YEAR	
A	1965

ASSEMBLY PLANT	
1	Lynch Road
2	Hamtramck
3	Jefferson Detroit
4	
5	Los Angeles
6	Newark
7	St. Louis

SEQUENCE NUMBER

Each plant consecutively numbers all vehicles beginning at 100 001 regardless of car make and model, except Detroit Built Valiant and Dart models which begin with 500 001

MODELS								
	VALIANT	PLYMOUTH 116″	PLYMOUTH 119″	DART	DODGE 117″	DODGE 121.5″	CHRYSLER	IMPERIAL
1	V-100	Belvedere I	Fury I	Dart	Coronet	Polara	Newport	
2			Fury II				300	Crown
3	V-200	Belvedere II	Fury III	Dart 270	Coronet 440	Custom 880	New Yorker	Le Baron
4	Signet	Satellite	Sport Fury	Dart GT	Coronet 500	Monaco	300L	
5	V-100 Wagon	Belvedere I Wagon	Fury I Wagon	Dart Wagon	Coronet Wagon	Polara Wagon	Newport Wagon	
6			Fury II Wagon					
7	V-200 Wagon	Belvedere II Wagon	Fury III Wagon	Dart 270 Wagon	Coronet 440 Wagon	Custom 880 Wagon	New Yorker Wagon	
8	Barracuda	Taxi	Taxi		Taxi			
9		Police	Police		Police	Police	Police	
0								

MyMopar.com

1965 PASSENGER CAR SERIAL NUMBERS - Cont'd

BODY CODE PLATE

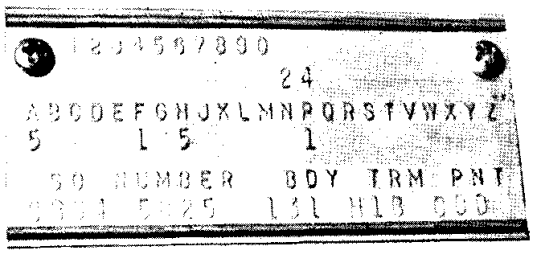

The location of the Body Code Plate varies with each car line. This plate contains the schedule number, body code, trim code, and paint code of the vehicle to which it is attached.

19x7940

VEHICLE SERIAL NUMBER PLATE

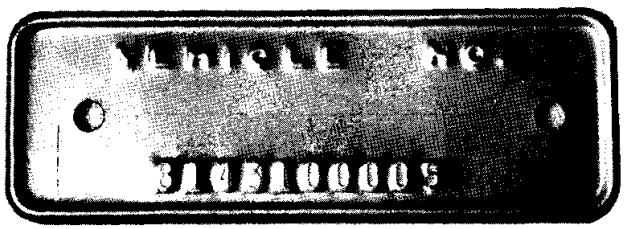

The Vehicle Serial Number Plate is located on the left front door hinge pillar ("A" Post). Always specify the vehicle serial number when ordering parts by description.

For a description of vehicle serial numbers refer to the section covering "1965 Passenger Car Serial Numbers".

19x7941

CERTICARD MODEL IDENTIFICATION

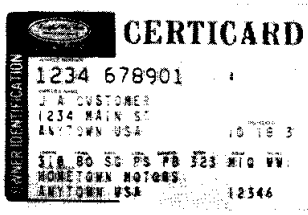

19x7942

The Owner Identification Certicard contains valuable information to assist in fast parts identification and specifying. Explanation of these codes follows:

Engine - Cu. In. Displacement of Engine (i.e., 318)
Trans. - See Transmission Codes below
Axle - SG - Sure Grip Axle
Strg. - PS - Power Steering
Brakes - PB - Power Brakes
Body - Refer to Dealer Code Sheets
Trim - Refer to Trim Section of Parts Catalog
Paint - Refer to Dealer Code Sheets

Code	Type of Transmission
10	Warner T85 (3 Speed Manual - Heavy Duty)
15	Warner T10 (4 Speed Manual)
40	903 Manual - Std. (6 Cyl.)
50	745 Manual 3 Speed

Code	Type of Transmission
60	A-833 - 4 Speed Manual
70	904 Automatic
80	A-727 Automatic

MyMopar.com

1965 MODEL SPECIFICATIONS

MODEL CODE	MODEL	CYL.	BEGINNING CAR SERIAL NUMBERS			
			DETROIT	LOS ANGELES	DELAWARE	ST. LOUIS
VALIANT						
V1-L	V-100	6	1152-500001	1155-100001	----------	1157-100001
V1-L	V-100 Station Wagon	6	1552-500001	1555-100001	----------	1557-100001
V1-H	V-200	6	1352-500001	1355-100001	----------	1357-100001
V1-H	V-200 Station Wagon	6	1752-500001	1755-100001	----------	1757-100001
V1-P	Signet	6	1452-500001	1455-100001	----------	1457-100001
V1-P	Barracuda	6	1852-500001	1855-100001	----------	1857-100001
V2-L	V-100	8	V152-500001	V155-100001	----------	V157-100001
V2-L	V-100 Station Wagon	8	V552-500001	V555-100001	----------	V557-100001
V2-H	V-200	8	V352-500001	V355-100001	----------	V357-100001
V2-H	V-200 Station Wagon	8	V752-500001	V755-100001	----------	V757-100001
V2-P	Signet	8	V452-500001	V455-100001	----------	V457-100001
V2-P	Barracuda	8	V852-500001	V855-100001	----------	V857-100001
PLYMOUTH 116″						
R1-L	Belvedere I	6	3151-100001	3155-100001	----------	3157-100001
R1-L	Belvedere I Station Wagon	6	3551-100001	3555-100001	----------	3557-100001
R1-H	Belvedere II	6	3351-100001	3355-100001	----------	3357-100001
R1-H	Belvedere II Station Wagon	6	3751-100001	3755-100001	----------	3757-100001
R2-L	Belvedere I	8	R151-100001	R155-100001	----------	R157-100001
R2-L	Belvedere I Station Wagon	8	R551-100001	R555-100001	----------	R557-100001
R2-H	Belvedere II	8	R351-100001	R355-100001	----------	R357-100001
R2-H	Belvedere II Station Wagon	8	R751-100001	R755-100001	----------	R757-100001
R2-P	Satellite	8	R451-100001	R455-100001	----------	R457-100001
PLYMOUTH 119″						
P1-L	Fury I	6	5152-100001	----------	5156-100001	----------
P1-L	Fury I Station Wagon	6	5552-100001	----------	5556-100001	----------
P1-M	Fury II	6	5252-100001	----------	5256-100001	----------
P1-H	Fury III	6	5352-100001	----------	5356-100001	----------
P2-L	Fury I	8	P152-100001	----------	P156-100001	----------
P2-L	Fury I Station Wagon	8	P552-100001	----------	P556-100001	----------
P2-M	Fury II	8	P252-100001	----------	P256-100001	----------
P2-M	Fury II Station Wagon	8	P652-100001	----------	P656-100001	----------
P2-H	Fury III	8	P352-100001	----------	P356-100001	----------
P2-H	Fury III Station Wagon	8	P752-100001	----------	P756-100001	----------
P2-P	Sport Fury	8	P452-100001	----------	P456-100001	----------

MyMopar.com

1965 MODEL SPECIFICATIONS - Cont'd

MODEL CODE		CYL.	BEGINNING CAR SERIAL NUMBERS			
			DETROIT	LOS ANGELES	DELAWARE	ST. LOUIS
DART						
L1-L	Dart	6	2152-500001	2155-100001	----------	2157-100001
L1-L	Dart Station Wagon	6	2552-500001	2555-100001	----------	2557-100001
L1-H	Dart 270	6	2352-500001	2355-100001	----------	2357-100001
L1-H	Dart 270 Station Wagon	6	2752-500001	2755-100001	----------	2757-100001
L1-P	Dart GT	6	2452-500001	2455-100001	----------	2457-100001
L2-L	Dart	8	L152-500001	L155-100001	----------	L157-100001
L2-L	Dart Station Wagon	8	L552-500001	L555-100001	----------	L557-100001
L2-H	Dart 270	8	L352-500001	L355-100001	----------	L357-100001
L2-H	Dart 270 Station Wagon	8	L752-500001	L755-100001	----------	L757-100001
L2-P	Dart GT	8	L452-500001	L455-100001	----------	L457-100001
DODGE 117"						
W1-L	Coronet	6	4151-100001	4155-100001	----------	4157-100001
W1-L	Coronet Station Wagon	6	4551-100001	4555-100001	----------	4557-100001
W1-H	Coronet 440	6	4351-100001	4355-100001	----------	4357-100001
W1-H	Coronet 440 Station Wagon	6	4751-100001	4755-100001	----------	4757-100001
W2-L	Coronet	8	W151-100001	W155-100001	----------	W157-100001
W2-L	Coronet Station Wagon	8	W551-100001	W555-100001	----------	W557-100001
W2-H	Coronet 440	8	W351-100001	W355-100001	----------	W357-100001
W2-H	Coronet 440 Station Wagon	8	W751-100001	W755-100001	----------	W757-100001
W2-P	Coronet 500	8	W451-100001	W455-100001	----------	W457-100001
DODGE 121.5"						
D2-L	Polara	8	D153-100001	----------	D156-100001	----------
D2-L	Polara Station Wagon	8	D553-100001	----------	D556-100001	----------
D2-H	Custom 880	8	D353-100001	----------	D356-100001	----------
D2-H	Custom 880 Station Wagon	8	D753-100001	----------	D756-100001	----------
D2-P	Monaco	8	D453-100001	----------	D456-100001	----------
CHRYSLER						
C1-L	Newport	8	C153-100001	----------	C156-100001	----------
C1-L	Newport Station Wagon	8	C553-100001	----------	C556-100001	----------
C2-M	300	8	C253-100001	----------	C256-100001	----------
C2-P	300L	8	C453-100001	----------	C456-100001	----------
C3-H	New Yorker	8	C353-100001	----------	C356-100001	----------
C3-H	New Yorker Station Wagon	8	C753-100001	----------	C756-100001	----------
IMPERIAL						
Y1-M	Crown	8	Y253-100001	----------	----------	----------
Y1-H	Le Baron	8	Y353-100001	----------	----------	----------

MyMopar.com

ENGINE IDENTIFICATION NUMBERS

The following chart provides examples of identification numbers of all 1965 engines, and the location of the boss on which the engine number is stamped.

Example:

A	361	8-1	* 2
Series	Cu. In. Displacement	Date Built	

* If a number appears after date built, this is for internal purposes only. When requesting engine information supply all numbers shown in this location.

On the 426 Cu. In. engine only the letter "H" following the series denotes "hemispherical" and the letters "H. C." following Cu. In. displacement denotes "high compression".

CYL.	ENGINE TYPE	CUBIC INCH DISPLACEMENT	EXAMPLE ENG. IDENTIFICATION NUMBER	IDENTIFICATION NUMBER BOSS LOCATION
6	G	170	A-170-8-1	Right side, front of block, below cylinder head
6	RG	225	A-225-8-1	
8	LA	273	A-273-8-1	Left side, front of block, below cylinder head
8	A	318	A-318-8-1	Left side, front of block, below cylinder head
8	B	361	A-361-8-1-2	Right side, front of block, below ignition distributor
8	LB	383	A-383-8-1-2	
8	RB	413	A-413-8-1-2	Top, front of block, left of water pump
8	RB	426	11:1 Comp. Ratio A-426-8-1-2 12.5:1 Comp. Ratio AH-426-HC-8-1-2	Left side, front of block, behind thermostat housing

IMPORTANT

Parts Division replacement engines are supplied with blank engine number bosses only. Dealers are governed by state law on the application of engine numbers. In states where license fees are based on displacement or taxable horsepower, it will be necessary to change vehicle registration if the new replacement engine differs from the one it replaces.

SYMBOLS USED IN THIS CATALOG

* Asterisks preceding part numbers indicate change or additions.

⊟ Double boxes preceding part numbers indicate parts added and not previously published.

★ Stars in the "Per Car" column mean "use as required".

( ) Numerals in parenthesis, either alone or with the terms "See Note--", or "Note--", refer to notes located at the beginning of the sub-group in which they are found or at the bottom of the page on which they appear. These notes are used wherever necessary to clarify the model application of the parts to which they are referenced.

MyMopar.com

ABBREVIATIONS

Abbreviations as used throughout this catalog are interpreted as follows:

abs.	absorber
accel.	accelerator
acc.	accessory
adj.	adjusting, adjustor, adjustable, adjustment
alum.	aluminum
amp.	ampere
approx.	approximate, approximately
arm.	armature
assy.	assembly
as req.	as required
att.	attaching
AL	AutoLite
auto.	automatic
aux.	auxiliary
bal.	balance
brg.	bearing
B.E.	black enamel
brkt.	bracket
br.	brass
bz.	bronze
blt.	built
bush.	bushing
ca.	cadmium
Cal.	California
canc.	cancelled
cp.	candlepower
carb.	carburetor
C.I.	cast iron
ctr.	center
C/L	Center Line
chamf.	chamfered
chr.	chromium
c/breaker	circuit breaker
c/nut	clinch nut
comb.	combination
compt.	compartment
comp.	complete, component
con.	connecting, connection, connector
cont.	continued
cop.	copper
ck.	countersunk
cu.	cubic
cust.	custom
cyl.	cylinder
defl.	deflector
Det.	Detroit
diag.	diagonal
dia.	diameter
diaph.	diaphragm
diff.	differential
dir.	directional
dist.	distributor, distributing
div.	division
dom.	domestic
d/r shaft	double rocker shaft
elec.	electric
elim.	eliminator
eng.	engine
equip.	equipment
etc.	et cetera
Evans.	Evansville
exh.	exhaust
Exp.	Export
ext.	extension
F	Fahrenheit
fast.	fastening, fastener
fil. hd.	fillister head
fin.	finish
fl. hd.	flat head
ft.	foot, feet
freq.	frequency
frt.	front
gen.	generator
gov.	governor
h/brake	hand brake
hd.	head
h/lamp	headlamp
hdls.	headless
h/lining	headlining
htr.	heater
hex.	hexagon
hsg.	housing
hydr.	hydraulic
ign.	ignition
in.	inch
incl.	inclusive, includes
ind.	indicator
I.D.	inside diameter
inst.	instrument, instruction
ins.	insulating, insulation, insulator
inter.	intermittently, intermediate
j/block	junction block
kilo.	kilometer
lea.	leather
lt.	left
LHD	Left Hand Drive
L.H. thd.	Left Hand Thread
lgh.	length
lic.	license
l/washer	lockwasher
L.A.	Los Angeles
L.C.	low compression
lwr.	lower
M.I.	malleable iron
manif.	manifold
man.	manual
max. perf.	maximum performance
m/cyl.	master cylinder
med.	medium
M.P.H.	miles per hour
mldg.	moulding
mtg.	mounting
neg.	negative
ni.	nickel
No. or #	number
oper.	operating
opp.	opposite
opt.	optional
oz.	ounce
O.D.	outside diameter
O/S	oversize
pkg.	package
pkd.	parkerized
park.	parking
p/lamp	parking lamp
part.	partial, partition
P. or Pass.	passenger
Penna.	Pennsylvania
pil.	pillar
pln.	plain

MyMopar.com

ABBREVIATIONS - CONT'D

p/washer	plainwasher
pltd.	plated
pt.	point
pos.	positive
lbs.	pounds
prop.	propeller
qtr.	quarter
rad.	radiator
rr.	rear
rec.	receiver
refl.	reflector
reg.	regulator
reinf.	reinforcement
rem.	remote
repl.	replacement
req.	required
ret.	retainer
R.P.M.	revolutions per minute
rt.	right
RHD	Right Hand Drive
R.H. thd.	Right Hand Thread
rd.	round
S.L.	San Leandro
sec.	section
s-fin.	semi-finished
ser.	serial, service
s.p.	shakeproof
sig.	signal
s/r shaft	single rocker shaft
speedo.	speedometer
spec. equip.	special equipment
sq.	square
std.	standard
S	steel
strg.	steering
stght.	straight
supt.	support
synch.	synchronizer
t/lamp	tail lamp
t/plate	tapping plate
t/bolt	tee-bolt
term.	terminal
T	teeth
thd.	thread
thk.	thick
Tor. Cv.	Torque Converter
trans.	transmission
tub.	tubular
U/Drive	underdrive
U/S.	undersize
univ.	universal
U.J.	universal joint
vac.	vacuum
vent.	ventilator, ventilating
vert.	vertical
v	volt
vol. cont.	volume control
w/strip.	weatherstrip
whl.	wheel
W.B.	wheelbase
w/house	wheelhouse
w/lift	window lift
w/shield	windshield
w/	with
w/o	without

PASSENGER CAR BODY STYLES

4 D.	Four Door Sedan
4 D. H.T.	Four Door Hardtop
Cv. Cp.	Convertible Coupe
Sta. Wgn.	Station Wagon
2 D.	Two Door Sedan
2 D. H.T.	Two Door Hardtop

ILLUSTRATIONS

Illustrations are located at the beginning of each major group. Parts are identified by Noun Name and Part Type Code or by a numerically listed legend page.

An illustration index of all illustrations in this publication will be found on page INF-14.

ALPHABETICAL INDEX

Reference to any part by sub-group name is provided in the Alphabetical Index. This index indicates the Part Type Code, by means of which the listing can be quickly located.

NUMERICAL INDEX

Reference to any part by part number is provided in the Numerical Index. This index indicates the Part Type Code.

MyMopar.com

PARTS PACKAGES

Service Parts Packages, containing all parts needed for a specific service operation, are listed in their respective groups with related parts. The listing will show adaptability and model application. Often it becomes necessary to know just what parts are contained in a Service Package. To determine this, refer to the Service Package Section. This section contains a secondary listing of all Service Packages in this Parts Catalog together with a list of every component part of each package. Service Packages in this section are listed numerically by Part Type Code.

STANDARD PARTS

Standard Parts such as bolts, nuts, etc., are listed under the major parts which they attach and are not coded. Standard Parts listed as Major Parts, such as fuses, bulbs, and bearings in the 100,000 part number series are assigned a Part Type Code and coded within the group in which they are listed.

A comprehensive listing of the most commonly used Standard Parts available in carton quantities will be found under Group 18. For complete coverage on Fasteners and attaching parts refer to Multi-Purpose Line Catalog.

PART TYPE CODE SYSTEM

To simplify the listing and location of individual parts, a system of Part Type Codes is used in this Parts Catalog.

To illustrate, a Type of Part will be indicated as:

2-03-3	KNUCKLE, w/BUSHING

This code is broken down as follows:

2-	Indicates the Major Group: "Group 2 -- Front Suspension"
-03-	Indicates the Sub Group: "03 -- Steering Knuckle"
-3	Indicates the Code for the specific name of the part: "Knuckle, w/Bushing"

Part Type Code 2-03-3 will always appear as "KNUCKLE, w/BUSHING."

PAGE NUMBERING

Two-part page numbers are used throughout this catalog. The first part of the page designation indicates the major group or section. The second part indicates the actual page number in the group. For example:

1-1 indicates Group 1, Accessories, Page 1

2-1 indicates Group 2, Front Suspension, Page 1

In the maintenance of the Loose Leaf Parts Catalog Revision Service, it may become necessary to add information beyond the capacity of the page. In this event, an "A" page will be used. For example: If it becomes necessary, because of change, to add several part numbers to page 2-1 and space does not permit the addition, you will be given Page 2-1A. Page 2-1A should be filed immediately following page 2-1.

MyMopar.com

HOW TO LOCATE PARTS

The Parts Catalog is divided into Groups. A tab index is provided to separate the Groups. To locate a part by name, see Alphabetical Index. To locate a part by number, see Numerical Index.

In cases where only the location of the part on the vehicle is known, refer to Tab Index to locate the Group in which the part is located. Then refer to the illustrations which appear at the beginning of that Group for identification of the part by name and Part Type Code. Parts are listed in Part Type Code sequence within the Group and reference to the proper code will determine the part number.

SPECIFYING INFORMATION

The following information is included in this Parts Catalog:

1. Part Type Code
2. Part Name
3. Part Number
4. Model Application
5. Quantity used per vehicle
6. Effective points of changes by vehicle serial number, engine number and body number.
7. Description and dimensions necessary for proper identification of parts.
8. Parts not previously listed in the Parts Catalog are designated by a double box (⊟) symbol preceding the part number.
9. Under the column "No. Cyl." where the number of cylinders is not shown indicates part is for 6 and 8 cylinder. In the model column 3 conditions appear:
   - A. Part Number
   - B. Dashes
   - C. Blank

   Part number applies only where it appears in the column of the model.

PARTS CATALOG REVISION SERVICE

Subscribers to the Chrysler Passenger Car Parts Catalog Revision Service will be provided with revision pages reflecting the latest parts information. Proper interfiling of revision pages will insure the subscriber a current catalog.

Included with each mailing of revision pages is a cover letter which outlines the contents of the particular revision. This letter summarizes the pages being eliminated, replaced, or added to each revised group. It is advised the letter be read carefully to avoid elimination of pages still current.

Periodically, certain changes require the immediate attention of catalog users. These changes, usually limited to a few part numbers, are provided revision service subscribers in PARTS INFORMATION BULLETINS. For maximum effectiveness, the bulletins should be filed immediately in their appropriate groups.

INTERFILING REVISION PAGES

The importance of prompt interfiling of revision pages upon receipt cannot be stressed too greatly.

The following method for interfiling revised and new pages has been found to be efficient and time saving and is recommended for your use:

1. Insert the revised pages loosely in their proper location in the catalog.
2. Pull the locking trigger and lift the transfer bar with all pages down to the first loose revision sheet which has been inserted in its proper location.

MyMopar.com

INTERFILING REVISION PAGES - Cont'd

3. Compare the revised (loose) page with the superseded page, noting changes and date.

NOTE: If you use the revised pages as part of your parts record-keeping system, note the changes in the revised (loose) page and post accordingly.

4. Remove superseded page.

5. Place revised page on post of transfer bar.

6. Replace transfer bar with all pages in place on bottom post.

7. Re-lock cover and your catalog is current and accurate.

COLOR CODED OR MIXED PART NUMBERS

Appearing throughout this catalog are part numbers containing both letters and numbers. For example: 2000VB5. These are good serviceable part numbers. The combination of letters and numbers merely indicates the parts are keyed to the interior color of the vehicles on which they are used.

ORDERING INFORMATION

NOTE - For information on how to order Chrysler parts, see General Information Section in Chrysler Parts Price List

MyMopar.com

NOTES

MyMopar.com

CODE	PART NAME AND PART NUMBER	CODE	PART NAME AND PART NUMBER

PARTS PACKAGES

1-09-1 LAMP PACKAGE, PARKING
BRAKE SIGNAL . . . . Part No. 2580 900
Consists of:
1 - 2580 461 Lamp
1 - 2291 852 Switch
1 - ---- --- Nut

LAMP PACKAGE, PARKING
BRAKE SIGNAL . . . . Part No. 2580 901
Consists of:
1 - ---- --- Housing, Lamp
1 - ---- --- Socket and Cable
1 - 9412 348 Bulb
1 - 2291 852 Switch
1 - ---- --- Nut, Switch Mounting

LAMP PACKAGE, PARKING
BRAKE SIGNAL . . . . Part No. 2580 902
Consists of:
1 - 2496 279 Socket
1 - 9415 969 Bulb
1 - 2291 852 Switch
1 - ---- --- Nut, Switch Mounting

1-10-1 LAMP PACKAGE,
BACK-UP . . . . . Part No. 2587 600
Consists of:
1 - 2497 567 Switch
2 - 9417 361 Screw, Switch Mounting
1 - ---- --- Wiring
1 - 1842 004 Insulator, Switch
2 - ---- --- Socket and Cable
2 - 151 576 Bulb
1 - ---- --- Lens, Right
1 - ---- --- Lens, Left
2 - 2445 569 Gasket, Lens
1 - ---- --- Housing, Right
1 - ---- --- Housing, Left

LAMP PACKAGE
BACK-UP . . . . . Part No. 2587 601
Consists of:
1 - 2258 404 Switch
1 - 1302 807 Gasket, Switch Mounting
1 - ---- --- Wiring, Engine Compt.
1 - ---- --- Wiring, Instrument Panel
2 - ---- --- Socket and Cable
2 - 151 576 Bulb
1 - ---- --- Lens, Right
1 - ---- --- Lens, Left
2 - ---- --- Gasket, Lens
1 - ---- --- Housing, Right
1 - ---- --- Housing, Left

LAMP PACKAGE,
BACK-UP . . . . . Part No. 2587 602
Consists of:
1 - 2661 167 Switch and Cover
2 - ---- --- Screw, Switch Mounting
1 - ---- --- Wiring, Instrument Panel
1 - ---- --- Insulator, Switch
1 - 2483 302 Lamp, Rear Bumper, Right
1 - 2483 303 Lamp, Rear Bumper, Left
2 - 2483 310 Retainer, Lamp
4 - 6023 204 Nut, Lamp Mounting

1-10-1 Cont'd
LAMP PACKAGE
BACK-UP . . . . . Part No. 2587 603
Consists of:
1 - 2258 404 Switch
1 - 1302 807 Gasket, Switch Mounting
1 - ---- --- Wiring, Engine Compt.
1 - ---- --- Wiring, Instrument Panel
1 - 2483 302 Lamp, Right
1 - 2483 303 Lamp, Left
2 - 2483 310 Retainer, Lamp
4 - 6023 204 Nut, Lamp Mounting

LAMP PACKAGE
BACK-UP . . . . . Part No. 2587 604
Consists of:
1 - 2497 567 Switch
1 - ---- --- Wiring, Instrument Panel
1 - ---- --- Insulator
2 - 2449 508 Lamp
4 - 6023 201 Nut, Lamp Mounting
2 - ---- --- Screw, Switch Mounting

LAMP PACKAGE,
BACK-UP . . . . . Part No. 2587 605
Consists of:
1 - 2258 404 Switch
1 - 1302 807 Gasket, Switch Mounting
1 - ---- --- Wiring, Engine Compt.
1 - ---- --- Wiring, Instrument Panel
2 - 2249 508 Lamp
4 - 6023 201 Nut, Lamp Mounting

LAMP PACKAGE,
BACK-UP . . . . . Part No. 2587 606
Consists of:
1 - 2258 404 Switch
1 - 1302 807 Gasket, Switch Mounting
1 - ---- --- Wiring, Engine Compt.
1 - ---- --- Wiring, Instrument Panel
1 - ---- --- Wiring, Body
2 - 151 576 Bulb
1 - 2483 364 Lamp, Right
1 - 2483 365 Lamp, Left
4 - 6024 113 Nut, Lamp Mounting
2 - 6023 185 Cup Washer, Lamp Mounting

LAMP PACKAGE,
BACK-UP . . . . . Part No. 2567 607
Consists of:
1 - 2497 567 Switch
1 - 2494 874 Wiring, Instrument Panel
1 - ---- --- Wiring, Body
1 - ---- --- Insulator, Switch
2 - 151 576 Bulb
1 - 2483 364 Lamp, Right
1 - 2483 365 Lamp, Left
4 - 6024 113 Nut, Lamp Mounting
2 - 6023 185 Cap, Washer, Lamp Mounting
2 - ---- --- Screw, Switch Mounting

LAMP PACKAGE,
BACK-UP . . . . . Part No. 2587 608
Consists of:
1 - 2258 404 Switch

(Pkg. Cont'd)

★ Indicates use as required.
⊟ Indicates parts not listed in any previous parts book.
● Indicates change or addition.

Printed in U.S.A.
Prices and specifications subject to change without notice.
March 1966 Supersedes Sept. 4, 1964.

MyMopar.com

CODE	PART NAME AND PART NUMBER
1-10-1	Cont'd
	1 - 1302 807 Gasket, Switch Mounting
	1 - ---- --- Wiring, Engine Compt.
	1 - ---- --- Wiring, Instrument Panel
	2 - 2497 433 Socket and Cable
	2 - 151 576 Bulb
	1 - 2422 656 Lamp, Right
	1 - 2422 657 Lamp, Left
	4 - 6023 414 Screw and Washer, Lamp Mounting
	2 - ---- --- Clip, Lamp Wiring
	2 - 2480 145 Cover, Lamp Socket
	2 - 1842 026 Terminal
	LAMP PACKAGE BACK-UP . . . . . Part No. 2587 609
	Consists of:
	1 - 2497 567 Switch
	2 - ---- --- Screw, Switch Mounting
	1 - 2530 191 Clip, Gear Shift Tube Switch
	1 - 6025 254 Washer, Gear Shift Tube Switch
	1 - ---- --- Wiring, Instrument Panel
	2 - ---- --- Clip, Wiring
	2 - 2497 433 Socket and Cable
	2 - 151 576 Bulb
	1 - 2422 656 Lamp, Right
	1 - 2422 657 Lamp, Left
	4 - 6023 414 Screw and Washer
	2 - 2480 145 Cover, Lamp Socket
	2 - 1842 026 Terminal
	LAMP PACKAGE BACK-UP . . . . . Part No. 2587 610
	Consists of:
	1 - 2497 567 Switch
	2 - ---- --- Screw, Switch Mounting
	1 - 2530 191 Clip, Gear Shift Tube Switch
	1 - 6025 254 Washer, Gear Shift Tube Switch
	1 - ---- --- Wiring, Instrument Panel
	2 - 2497 433 Socket and Cable
	2 - 151 576 Bulb
	2 - ---- --- Lens
	1 - ---- --- Housing, Lamp, Right
	1 - ---- --- Housing, Lamp, Left
	8 - 9419 633 Screw, Housing Mounting
	1 - ---- --- Plate, Tail Lamp Reinf., Right
	1 - ---- --- Plate, Tail Lamp Reinf., Left
	2 - 1842 026 Terminal
	LAMP PACKAGE BACK-UP . . . . . Part No. 2587 611
	Consists of:
	1 - 2258 404 Switch
	1 - 1302 807 Gasket, Switch Mounting
	1 - ---- --- Wiring, Engine Compt.
	1 - ---- --- Wiring, Instrument Panel
	2 - 2497 433 Socket and Cable
	2 - 151 576 Bulb
	2 - ---- --- Lens
	(Pkg. Cont'd)

CODE	PART NAME AND PART NUMBER
1-10-1	Cont'd
	1 - ---- --- Housing, Lamp, Right
	1 - ---- --- Housing, Lamp, Left
	8 - 9419 633 Screw, Housing Mounting
	1 - ---- --- Plate, Tail Lamp Reinf., Right
	1 - ---- --- Plate, Tail Lamp Reinf., Left
	2 - 1842 026 Terminal
	LAMP PACKAGE, BACK-UP . . . . . Part No. 2587 612
	Consists of:
	1 - 2258 404 Switch
	1 - 1302 807 Gasket, Switch Mounting
	1 - ---- --- Wiring, Engine Compt.
	1 - ---- --- Wiring, Instrument Panel
	2 - 2497 433 Socket and Cable
	2 - 151 576 Bulb
	2 - 2290 189 Socket, Lamp
	2 - 1842 906 Terminal
	LAMP PACKAGE, BACK-UP . . . . . Part No. 2587 613
	Consists of:
	1 - 2497 567 Switch
	2 - ---- --- Screw, Switch Mounting
	1 - 2530 191 Clip, Gear Shift Tube Switch
	1 - 6025 254 Washer, Gear Shift Tube Switch
	1 - ---- --- Wiring, Instrument Panel
	2 - 2497 433 Socket and Cable
	2 - 151 576 Bulb
	2 - 2290 189 Socket, Lamp
	2 - 1842 026 Terminal
1-14-4	LAMP PACKAGE, MAP and COURTESY . Part No. 2587 074
	Consists of:
	1 - ---- --- Lamp
	1 - ---- --- Screw, Mounting
	1 - ---- --- Washer
	LAMP PACKAGE, MAP and COURTESY . Part No. 2587 075
	Consists of:
	1 - ---- --- Lamp
	LAMP PACKAGE MAP and COURTESY . Part No. 2587 076
	Consists of:
	1 - 2497 639 Lamp and Switch
	1 - ---- --- Wiring
	1 - 151 578 Bulb
	LAMP PACKAGE, MAP and COURTESY . Part No. 2587 077
	Consists of:
	1 - 2580 284 Lamp and Switch
	1 - ---- --- Housing, Lamp
	2 - ---- --- Screw, Housing Mounting
	1 - ---- --- Wiring
	1 - 151 578 Bulb

★ Indicates use as required.
B Indicates parts not listed in any previous parts book.
September 4, 1964.

Printed in U.S.A.
Prices and specifications subject to change without notice.
MyMopar.com

CODE	PART NAME AND PART NUMBER
1-76-1	MIRROR PACKAGE, OUTSIDE REAR VIEW . Part No. 2299 574 Consists of: 1 - ---- --- Mirror 1 - ---- --- Gasket 2 - 9417 530 Screw
	MIRROR PACKAGE, OUTSIDE REAR VIEW . Part No. 2275 015 Consists of: 1 - ---- --- Mirror 1 - ---- --- Gasket 1 - 2161 931 Anti-Squeak 2 - 274 791 Screw
	MIRROR PACKAGE, OUTSIDE REAR VIEW . Part No. 2495 878 Consists of: 1 - ---- --- Washer, Index 1 - ---- --- Seal 1 - ---- --- Mirror and Gasket 1 - 2486 371 Control, Remote 1 - ---- --- Bezel
2-05-4	ARM PACKAGE, FRONT SUSPENSION STEERING KNUCKLE BALL JOINT HOUSING, LEFT . . . Part No. 2585 593 Consists of: 1 - ---- --- Arm, Steering Knuckle Ball Joint Housing 1 - ---- --- Nut, Steering Knuckle Ball Joint Stud 1 - ---- --- Pin, Steering Knuckle Ball Joint Nut Cotter
2-07-1	END PACKAGE, FRONT SUSPENSION TIE ROD INNER . . . . . Part No. 2525 417 Consists of: 1 - ---- --- Bolt, Tie Rod End Clamp 1 - ---- --- Clamp, Tie Rod End 1 - ---- --- End, Tie Rod 1 - ---- --- Nut, Tie Rod End Clamp Bolt Lock 1 - ---- --- Nut, Tie Rod End Stud 1 - ---- --- Pin, Tie Rod Nut Cotter
	END PACKAGE, FRONT SUSPENSION TIE ROD OUTER . . . . . Part No. 2525 416 Consists of: 1 - ---- --- Bolt, Tie Rod End Clamp 1 - ---- --- Clamp, Tie Rod End 1 - ---- --- End, Tie Rod 1 - ---- --- Nut, Tie Rod End Clamp Bolt Lock 1 - ---- --- Nut, Tie Rod End Stud 1 - ---- --- Pin, Tie Rod Nut Cotter
2-07-1	Cont'd END PACKAGE, FRONT SUSPENSION TIE ROD INNER . . . . . Part No. 2525 073 Consists of: 1 - ---- --- Bolt, Tie Rod End Clamp 1 - ---- --- Clamp, Tie Rod End 1 - ---- --- End, Tie Rod 1 - ---- --- Nut, Tie Rod End Stud 1 - ---- --- Nut, Tie Rod End Clamp Bolt 1 - ---- --- Pin, Tie Rod End Stud Cotter
	END PACKAGE, FRONT SUSPENSION TIE ROD OUTER . . . . . Part No. 2525 074 Consists of: 1 - ---- --- Bolt, Tie Rod End Clamp 1 - ---- --- Clamp, Tie Rod End 1 - ---- --- End, Tie Rod 1 - ---- --- Nut, Tie Rod End Stud 1 - ---- --- Nut, Tie Rod End Clamp Bolt 1 - ---- --- Pin, Tie Rod End Stud Cotter
	END PACKAGE, FRONT SUSPENSION TIE ROD INNER . . . . . Part No. 2585 500 Consists of: 1 - ---- --- Bolt, Tie Rod End Clamp 1 - ---- --- Clamp, Tie Rod End 1 - ---- --- End, Tie Rod 1 - ---- --- Nut, Tie Rod End Stud 1 - ---- --- Nut, Tie Rod End Clamp Bolt 1 - ---- --- Pin, Tie Rod End Stud Cotter
	END PACKAGE, FRONT SUSPENSION TIE ROD OUTER . . . . . Part No. 2585 501 Consists of: 1 - ---- --- Bolt, Tie Rod End Clamp 1 - ---- --- Clamp, Tie Rod End 1 - ---- --- End, Tie Rod 1 - ---- --- Nut, Tie Rod End Stud 1 - ---- --- Nut, Tie Rod End Clamp Bolt 1 - ---- --- Pin, Tie Rod End Stud Cotter
	END PACKAGE, FRONT SUSPENSION TIE ROD INNER, RIGHT . . . . . Part No. 2495 040 Consists of: 1 - ---- --- Bolt, Tie Rod End Clamp 1 - ---- --- Clamp, Tie Rod 1 - ---- --- End, Tie Rod Inner 1 - ---- --- Nut, Tie Rod Clamp Bolt 1 - ---- --- Pin, Tie Rod Ball Nut Cotter

★ Indicates use as required.
⊟ Indicates parts not listed in any previous parts book.
* Indicates change or addition.

Printed in U.S.A.
Prices and specifications subject to change without notice.
March 1966 Supersedes May 1965.

MyMopar.com

CODE	PART NAME AND PART NUMBER
2-07-1	Cont'd END PACKAGE, FRONT SUSPENSION TIE ROD, INNER, LEFT . . . . . Part No. 2495 039 Consists of: 1 - ---- --- Bolt, Tie Rod End Clamp 1 - ---- --- Clamp, Tie Rod 1 - ---- --- End, Tie Rod Inner 1 - ---- --- Nut, Tie Rod Clamp Bolt 1 - ---- --- Pin, Tie Rod Ball Nut Cotter
	END PACKAGE, FRONT SUSPENSION TIE ROD OUTER, RIGHT . . . . . Part No. 2495 042 Consists of: 1 - ---- --- Bolt, Tie Rod Clamp 1 - ---- --- Clamp, Tie Rod 1 - ---- --- End, Tie Rod 1 - ---- --- Nut, Tie Rod Clamp Bolt 1 - ---- --- Pin, Tie Rod Ball Nut 1 - 1858 262 Shield, Tie Rod End Seal
	END PACKAGE, FRONT SUSPENSION TIE ROD OUTER, LEFT . . . . . Part No. 2495 041 Consists of: 1 - ---- --- Bolt, Tie Rod Clamp 1 - ---- --- Clamp, Tie Rod 1 - ---- --- End, Tie Rod 1 - ---- --- Nut, Tie Rod Clamp Bolt 1 - ---- --- Pin, Tie Rod Ball Nut Cotter 1 - 1858 263 Shield, Tie Rod End Seal
2-07-1	Cont'd END PACKAGE, FRONT SUSPENSION TIE ROD INNER, RHD . . . . . Part No. 2525 446 Consists of: 1 - ---- --- Bolt, Tie Rod End Clamp 1 - ---- --- Clamp, Tie Rod End 1 - ---- --- End, Tie Rod 1 - ---- --- Nut, Tie Rod End Stud 1 - ---- --- Nut, Tie Rod End Clamp Bolt 1 - ---- --- Pin, Tie Rod End Stud Cotter
	END PACKAGE, FRONT SUSPENSION TIE ROD OUTER, RHD . . . . . Part No. 2525 447 Consists of: 1 - ---- --- Bolt, Tie Rod End Clamp 1 - ---- --- Clamp, Tie Rod End 1 - ---- --- End, Tie Rod 1 - ---- --- Nut, Tie Rod End Stud 1 - ---- --- Nut, Tie Rod End Clamp Bolt 1 - ---- --- Pin, Tie Rod End Stud Cotter
2-08-57	BALL JOINT PACKAGE, FRONT SUSPENSION UPPER . . . . . Part No. 2298 533 Consists of: 1 - ---- --- Ball Joint 1 - 273 705 Nut, Ball Joint Stud 1 - ---- --- Pin, Ball Joint Stud Nut Cotter 1 - 2071 255 Seal, Ball Joint

NOTES

★ Indicates use as required.
⊟ Indicates parts not listed in any previous parts book.
March 1966 Supersedes May 1965.

Printed in U.S.A.
Prices and specifications subject to change without notice.
* Indicates change or addition.

MyMopar.com

CODE	PART NAME AND PART NUMBER	CODE	PART NAME AND PART NUMBER

NOTES

★ Indicates use as required.
⊟ Indicates parts not listed in any previous parts book.
* Indicates change or addition.

Printed in U.S.A.
Prices and specifications subject to change without notice.
May 1965.

MyMopar.com

CODE	PART NAME AND PART NUMBER
2-08-57	Cont'd. BALL JOINT PACKAGE, FRONT SUSPENSION UPPER . . . . . Part No. 2298 534 Consists of: 1 - ---- --- Ball Joint 1 - ---- --- Nut, Ball Joint Stud 1 - ---- --- Pin, Ball Joint Stud Nut Cotter 1 - 1825 487 Seal, Ball Joint 1 - 1672 960 Washer, Ball Joint Stud Nut
	BALL JOINT PACKAGE, FRONT SUSPENSION UPPER . . . . . Part No. 2298 536 Consists of: 1 - ---- --- Ball Joint 1 - 128 027 Nut, Ball Joint Stud 1 - ---- --- Pin, Ball Joint Stud Nut Cotter 1 - 1825 761 Seal, Ball Joint 1 - 1672 960 Washer, Ball Joint Stud Nut
2-08-59	CAM and BUSHING PACKAGE, FRONT SUSPENSION UPPER CONTROL ARM . . . . . Part No. 2084 920 Consists of: 2 - 2071 204 Bushing, Arm 2 - ---- --- Cam, Arm Slotted 2 - ---- --- Cam, Arm 2 - 1825 449 Nut, Arm Bolt 2 - 120 384 Washer, Lock Arm Cam
	CAM and BUSHING PACKAGE, FRONT SUSPENSION UPPER CONTROL ARM . . . . Part No. 2448 099 Consists of: 2 - ---- --- Bracket, Cam 2 - 1825 317 Bushing, Arm 2 - ---- --- Cam, Bracket Slotted 2 - 120 384 Washer, Lock, Bracket Cam 2 - 1825 449 Nut, Bracket Bolt 1 - ---- --- Sleeve, Arm Bushing Locking
	CAM and BUSHING PACKAGE, FRONT SUSPENSION UPPER CONTROL ARM . . . . Part No. 2525 070 Consists of: 2 - 2269 124 Bushing, Arm 2 - ---- --- Cam, Bracket Slotted 2 - ---- --- Cam, Bracket 2 - 1825 449 Nut, Bracket Bolt 2 - 120 384 Washer, Lock, Bracket Cam
2-10-55	ARM and BALL JOINT PACKAGE, FRONT SUSPENSION STEERING KNUCKLE HOUSING, LOWER RIGHT . . . . . Part No. 2275 462 Consists of: 1 - ---- --- Arm, Steering Knuckle Ball Joint Housing 1 - ---- --- Nut, Steering Knuckle Ball Joint Stud 1 - ---- --- Pin, Steering Knuckle Ball Joint Nut Cotter
	ARM and BALL JOINT, FRONT SUSPENSION STEERING KNUCKLE HOUSING, LOWER LEFT Part No. 2275 463 Consists of: 1 - ---- --- Arm, Steering Knuckle Ball Joint Housing 1 - ---- --- Nut, Steering Knuckle Ball Joint Stud 1 - ---- --- Pin, Steering Knuckle Ball Joint Nut Cotter
	ARM and BALL JOINT PACKAGE, FRONT SUSPENSION STEERING KNUCKLE HOUSING, LOWER RIGHT . . . . . Part No. 2275 464 Consists of: 1 - ---- --- Arm, Steering Knuckle Ball Joint Housing 1 - ---- --- Nut, Steering Knuckle Ball Joint Stud 1 - ---- --- Pin, Steering Knuckle Ball Joint Nut Cotter
	ARM and BALL JOINT PACKAGE, FRONT SUSPENSION STEERING KNUCKLE HOUSING, LOWER LEFT . . . . . Part No. 2275 465 Consists of: 1 - ---- --- Arm, Steering Knuckle Ball Joint Housing 1 - ---- --- Nut, Steering Knuckle Ball Joint Stud 1 - ---- --- Pin, Steering Knuckle Ball Joint Nut Cotter
	ARM and BALL JOINT PACKAGE, FRONT SUSPENSION STEERING KNUCKLE HOUSING, LOWER RIGHT . . . . . Part No. 2525 450 Consists of: 1 - ---- --- Arm, Ball Joint Housing 1 - 128 027 Nut, Ball Joint Stud 1 - ---- --- Pin, Ball Joint Stud Nut Cotter

MyMopar.com

CODE	PART NAME AND PART NUMBER
2-10-55	Cont'd ARM and BALL JOINT PACKAGE, FRONT SUSPENSION STEERING KNUCKLE HOUSING, LOWER LEFT . . . . . Part No. 2525 451 Consists of: 1 - ---- --- Arm, Ball Joint Housing 1 - 128 027 Nut, Ball Joint Stud 1 - ---- --- Pin, Ball Joint Stud Nut Cotter
	BALL JOINT PACKAGE, FRONT SUSPENSION LOWER . . . . . Part No. 2298 537 Consists of: 1 - ---- --- Ball Joint 1 - 1671 405 Nut, Ball Joint Stud 1 - ---- --- Pin, Ball Joint Stud Nut Cotter 1 - 1825 762 Seal, Ball Joint 1 - 1672 961 Washer, Ball Joint Stud Nut
	ARM and BALL JOINT PACKAGE, FRONT SUSPENSION STEERING KNUCKLE HOUSING, LOWER RIGHT, RHD. . Part No. 2275 466 Consists of: 1 - ---- --- Arm, Steering Knuckle Ball Joint Housing 1 - ---- --- Nut, Steering Knuckle Ball Joint Stud 1 - ---- --- Pin, Steering Knuckle Ball Joint Nut Cotter
	ARM and BALL JOINT PACKAGE, FRONT SUSPENSION STEERING KNUCKLE HOUSING, LOWER LEFT, RHD. . Part No. 2275 467 Consists of: 1 - ---- --- Arm, Steering Knuckle Ball Joint Housing 1 - ---- --- Nut, Steering Knuckle Ball Joint Stud 1 - ---- --- Pin, Steering Knuckle Ball Joint Nut Cotter
	ARM and BALL JOINT PACKAGE, FRONT SUSPENSION STEERING KNUCKLE HOUSING, LOWER RIGHT, RHD. . Part No. 2525 452 Consists of: 1 - ---- --- Arm, Ball Joint Housing 1 - 128 027 Nut, Ball Joint Stud 1 - ---- --- Pin, Ball Joint Stud Nut Cotter
	ARM and BALL JOINT PACKAGE, FRONT SUSPENSION STEERING KNUCKLE HOUSING, LOWER LEFT, RHD. . Part No. 2525 453 Consists of: 1 - ---- --- Arm, Ball Joint Housing 1 - 128 027 Nut, Ball Joint Stud 1 - ---- --- Pin, Ball Joint Stud Nut Cotter

CODE	PART NAME AND PART NUMBER
2-10-55	Cont'd ARM and BALL JOINT PACKAGE, FRONT SUSPENSION STEERING KNUCKLE HOUSING, LOWER RIGHT . . . . . Part No. 2585 332 Consists of: 1 - ---- --- Arm, Ball Joint Housing 1 - 128 027 Nut, Ball Joint Stud 1 - ---- --- Pin, Cotter Ball Joint Stud Nut
	ARM and BALL JOINT PACKAGE, FRONT SUSPENSION STEERING KNUCKLE HOUSING, LOWER LEFT . . . . . Part No. 2585 333 Consists of: 1 - ---- --- Arm, Ball Joint Housing 1 - 128 027 Nut, Ball Joint Stud 1 - ---- --- Pin, Cotter Ball Joint Stud Nut
	ARM and BALL JOINT PACKAGE, FRONT SUSPENSION STEER- ING KNUCKLE BALL JOINT HOUSING, RIGHT Part No. *2585 594 Consists of: 1 - ---- --- Arm, Steering Knuckle Ball Joint Housing 1 - ---- --- Nut, Steering Knuckle Ball Joint Stud 1 - ---- --- Pin, Steering Knuckle Ball Joint Nut Cotter
2-10-57	BUSHING and RETAINER PACKAGE, FRONT SUSPENSION, LOWER CONTROL ARM STRUT. Part No. 2084 045 Consists of: 1 - 1734 321 Bushing, Control Arm Strut 1 - ---- --- Nut, Control Arm Strut Bushing 2 - 1734 341 Retainer, Control Arm Strut Bushing
	BUSHING and RETAINER PACKAGE, FRONT SUSPENSION LOWER CONTROL ARM STRUT. Part No. 2084 918 Consists of: 1 - 2071 443 Bushing, Front Suspension Strut 1 - 6024 657 Nut, Front Suspension Strut Bushing Retainer 2 - 2071 211 Retainer, Front Suspension Strut Bushing

MyMopar.com

CODE	PART NAME AND PART NUMBER
2-10-57	Cont'd BUSHING and RETAINER PACKAGE, FRONT SUSPENSION LOWER CONTROL ARM STRUT. Part No. 2525 083 Consists of: 1 - 2207 282 Bushing, Lower Control Arm Strut Front 1 - 2207 296 Bushing, Lower Control Arm Strut Rear 1 - 6024 565 Nut, Lower Control Arm Strut Bushing 2 - 2207 322 Retainer, Lower Control Arm Strut Bushing 1 - 2207 324 Sleeve, Lower Control Arm Strut Bushing
2-10-61	SHAFT PACKAGE, FRONT SUSPENSION LOWER CONTROL ARM . . . . Part No. 2275 460 Consists of: 1 - 128 027 Nut, Lower Control Arm Shaft 1 - ---- --- Pin, Lower Control Arm Shaft Nut Cotter 1 - ---- --- Shaft, Lower Control Arm 1 - 2071 470 Washer, Lower Control Arm Shaft
	SHAFT PACKAGE, FRONT SUSPENSION LOWER CONTROL ARM . . . . Part No. 2275 461 Consists of: 1 - 128 027 Nut, Lower Control Arm Shaft 1 - ---- --- Pin, Lower Control Arm Shaft Nut Cotter 1 - ---- --- Shaft, Lower Control Arm 1 - 2071 470 Washer, Lower Control Arm Shaft
	SHAFT PACKAGE, FRONT SUSPENSION LOWER CONTROL ARM . . . . Part No. 2525 072 Consists of: 1 - ---- --- Nut, Lower Control Arm Shaft 1 - ---- --- Pin, Lower Control Arm Shaft Nut Cotter 1 - ---- --- Shaft, Lower Control Arm 1 - ---- --- Washer, Lower Control Arm Shaft
	SHAFT and BUSHING PACKAGE, FRONT SUSPENSION LOWER CONTROL ARM . . . . Part No. 1881 647 Consists of: 1 - 1636 010 Bushing, Shaft 1 - ---- --- Nut, Bushing 1 - 128 213 Nut, Shaft 1 - ---- --- Pin, Arm 1 - ---- --- Pin, Bushing Nut Cotter 1 - ---- --- Shaft, Lower Control Arm 1 - ---- --- Washer, Bushing 1 - ---- --- Washer, Shaft Nut
2-14-1	BOLT and SWIVEL PACKAGE, FRONT SUSPENSION TORSION BAR or SPRING, FRONT END ADJUSTING . . . . Part No. 2275 468 Consists of: 1 - ---- --- Bolt 1 - ---- --- Swivel
	BOLT and SWIVEL PACKAGE, FRONT SUSPENSION TORSION BAR or SPRING, FRONT END ADJUSTING Part No. 2275 469 Consists of: 1 - ---- --- Bolt 1 - ---- --- Swivel
	BOLT and SWIVEL PACKAGE, FRONT SUSPENSION TORSION BAR or SPRING, FRONT END ADJUSTING . . . . . Part No. 2275 470 Consists of: 1 - ---- --- Bolt 1 - ---- --- Swivel
	BOLT and SWIVEL PACKAGE, FRONT SUSPENSION TORSION BAR or SPRING, REAR END ANCHOR ADJUSTING . . . . . Part No. 2525 086 Consists of: 1 - ---- --- Bolt 1 - ---- --- Swivel
	BOLT and SWIVEL PACKAGE, FRONT SUSPENSION TORSION BAR or SPRING, REAR END ANCHOR ADJUSTING . . . . . Part No. 2525 087 Consists of: 1 - ---- --- Bolt 1 - ---- --- Swivel
	BOLT and SWIVEL PACKAGE, FRONT SUSPENSION TORSION BAR or SPRING, REAR END ANCHOR ADJUSTING . . . . . Part No. 2196 774 Consists of: 1 - ---- --- Bolt 1 - ---- --- Swivel
2-14-8	ANCHOR PACKAGE, FRONT SUSPENSION TORSION BAR or SPRING, RIGHT . . . . . Part No. 2196 752 Consists of: 1 - ---- --- Anchor, End 1 - ---- --- Bolt, End Anchor Adjusting 1 - 1639 171 Lock, End Anchor 1 - 1825 582 Plug, End Anchor 1 - 1613 388 Seal, End Anchor 1 - 1857 549 Seat, End Anchor Adjusting 1 - ---- --- Swivel, End Anchor Adjusting

★ Indicates use as required.
⊟ Indicates parts not listed in any previous parts book.
March 1966 Supersedes Sept. 4, 1964.

Printed in U.S.A.
Prices and specifications subject to change without notice.
• Indicates change or addition.
MyMopar.com

CODE	PART NAME AND PART NUMBER
2-14-8	Cont'd ANCHOR PACKAGE, FRONT SUSPENSION TORSION BAR or SPRING, LEFT. Part No. 2196 753 Consists of: 1 - ---- --- Anchor, End 1 - ---- --- Bolt, End Anchor Adjusting 1 - 1639 171 Lock, End Anchor 1 - 1825 582 Plug, End Anchor 1 - 1613 388 Seal, End Anchor 1 - 1857 549 Seat, End Anchor Adjusting 1 - ---- --- Swivel, End Anchor Adjusting ANCHOR PACKAGE, FRONT FRONT SUSPENSION TORSION BAR or SPRING, RIGHT . . . . . Part No. 2196 754 Consists of: 1 - ---- --- Anchor, End 1 - ---- --- Bolt, End Anchor Adjusting 1 - 1639 171 Lock, End Anchor 1 - 1825 582 Plug, End Anchor 1 - 1613 388 Seal, End Anchor 1 - 1857 549 Seat, End Anchor Adjusting 1 - ---- --- Swivel, End Anchor Adjusting ANCHOR PACKAGE, FRONT SUSPENSION TORSION BAR or SPRING, LEFT. Part No. 2196 755 Consists of: 1 - ---- --- Anchor, End 1 - ---- --- Bolt, End Anchor Adjusting 1 - 1639 171 Lock, End Anchor 1 - 1825 582 Plug, End Anchor 1 - 1613 388 Seal, End Anchor 1 - 1857 549 Seat, End Anchor Adjusting 1 - ---- --- Swivel, End Anchor Adjusting
3-09-3	REPAIR KIT, REAR AXLE DIFFERENTIAL . . . . Part No. 2070 845 Consists of: 2 - ---- --- Disc 2 - ---- --- Disc 2 - ---- --- Plate 2 - ---- --- Plate 2 - ---- --- Plate REPAIR KIT, REAR AXLE DIFFERENTIAL . . . . Part No. 2404 427 Consists of: 2 - ---- --- Plate 2 - ---- --- Disc 2 - ---- --- Plate 2 - ---- --- Disc 2 - ---- --- Plate
3-33-1	BEARING PACKAGE, DRIVE SHAFT . . . . . Part No. 2421 349 Consists of: 1 - ---- --- Bearing 1 - ---- --- Collar

CODE	PART NAME AND PART NUMBER
3-33-1	Cont'd BEARING PACKAGE, DRIVE SHAFT . . . . . Part No. 2525 415 Consists of: 1 - ---- --- Bearing 1 - ---- --- Collar
5-03-1	LINING PACKAGE, WHEEL BRAKE SHOE . . . . . Part No. 2448 321 Consists of: 2 - ---- --- Lining 2 - ---- --- Lining 2 - ---- --- Lining 2 - ---- --- Lining LINING PACKAGE, WHEEL BRAKE SHOE . . . . . Part No. 2248 320 Consists of: 4 - ---- --- Lining 4 - ---- --- Lining LINING PACKAGE, WHEEL BRAKE SHOE . . . . . Part No. 2298 842 Consists of: 4 - ---- --- Lining 4 - ---- --- Lining LINING PACKAGE, WHEEL BRAKE SHOE . . . . . Part No. 2495 006 Consists of: 4 - ---- --- Lining 4 - ---- --- Lining LINING PACKAGE, WHEEL BRAKE SHOE. . . . . Part No. 2525 462 Consists of: 4 - ---- --- Lining, Primary 4 - ---- --- Lining, Secondary
5-39-1	REPAIR PACKAGE, MASTER CYLINDER . . Part No. 2196 905 Consists of: 1 - 1318 446 Valve 1 - ---- --- Seal, Valve 1 - ---- --- Cup, Piston 1 - ---- --- Cup, Secondary 1 - ---- --- Washer, Piston Cup 1 - 1828 388 Boot, Cylinder REPAIR PACKAGE, MASTER CYLINDER . . Part No. 2275 513 Consists of: 1 - ---- --- Piston and Push Rod 1 - 1318 446 Valve 1 - ---- --- Seal, Valve 1 - ---- --- Cup, Piston 1 - ---- --- Cup, Secondary 1 - ---- --- Washer, Piston Cup 1 - 1828 388 Boot, Cylinder

MyMopar.com

CODE	PART NAME AND PART NUMBER
5-39-1	Cont'd REPAIR PACKAGE, MASTER CYLINDER . . Part No. 2421 315 Consists of: 1 - ---- --- Piston and Push Rod 1 - 1318 446 Valve 1 - ---- --- Seal, Valve 1 - ---- --- Cup, Piston 1 - ---- --- Cup, Secondary 1 - ---- --- Washer, Piston Cup 1 - 1828 388 Boot, Cylinder
	REPAIR PACKAGE, MASTER CYLINDER . . Part No. 2525 097 Consists of: 1 - ---- --- Piston and Push Rod 1 - 1318 446 Valve 1 - ---- --- Seal, Valve 1 - ---- --- Cup, Piston 1 - ---- --- Cup, Secondary 1 - ---- --- Washer, Piston Cup 1 - 1828 388 Boot, Cylinder
	REPAIR PACKAGE, MASTER CYLINDER . . Part No. 2298 939 Consists of: 1 - ---- --- Piston, Cylinder 1 - 1318 446 Valve 1 - ---- --- Seal, Valve 1 - ---- --- Cup, Piston 1 - ---- --- Cup, Secondary 1 - ---- --- Washer, Piston Cup
5-63-1	REPAIR PACKAGE, WHEEL CYLINDER, FRONT . . . . . Part No. 2084 788 Consists of: 2 - 1669 337 Cup 2 - 2072 625 Boot
	REPAIR PACKAGE, WHEEL CYLINDER, REAR . . . . . Part No. 2084 789 Consists of: 2 - 2072 636 Cup 2 - 2072 679 Boot
	REPAIR PACKAGE, WHEEL CYLINDER, FRONT . . . . . Part No. 2275 535 Consists of: 2 - 2260 838 Cup 2 - 2260 840 Boot
	REPAIR PACKAGE, WHEEL CYLINDER, REAR . . . . . Part No. 2275 536 Consists of: 2 - 2260 844 Cup 2 - 2260 846 Boot
5-63-3	REPAIR PACKAGE, FRONT WHEEL CYLINDER PISTON . . . . . Part No. 2084 790 Consists of: 2 - 1669 337 Cup 1 - 1923 765 Spring (Pkg. Cont'd)

CODE	PART NAME AND PART NUMBER
5-63-3	Cont'd 2 - 2972 625 Boot 2 - 2072 655 Piston
	REPAIR PACKAGE, REAR WHEEL CYLINDER PISTON . . . . . Part No. 2084 791 Consists of: 2 - 2072 636 Cup 1 - 2072 637 Spring 2 - 2072 656 Piston 2 - 2072 679 Boot
	REPAIR PACKAGE, FRONT WHEEL CYLINDER PISTON . . . . . Part No. 2275 539 Consists of: 2 - 2260 837 Piston 2 - 2260 838 Cup 1 - 2260 839 Spring 2 - 2260 840 Boot
	REPAIR PACKAGE, REAR WHEEL CYLINDER PISTON . . . . . Part No. 2275 540 Consists of: 1 - 1923 765 Spring 2 - 2260 843 Piston 2 - 2260 844 Cup 2 - 2260 846 Boot
5-100-1	REPAIR PACKAGE, POWER BRAKE, POWER UNIT . Part No. 2075 001 Consists of: 1 - ---- --- Diaphragm, Poppet 1 - ---- --- Disc, Reaction 1 - ---- --- Filter, Air Cleaner 1 - ---- --- Guard, Valve Rod 1 - ---- --- Seal, Valve Rod 1 - ---- --- Poppet
	REPAIR PACKAGE, POWER BRAKE, POWER UNIT . Part No. 2495 069 Consists of: 1 - ---- --- Diaphragm and Backing Plate 1 - 2409 997 Seal, Hub to Diaphragm Backing Plate 1 - 2401 163 Seal, Adaptor to Rear Housing 1 - 2401 166 Retainer, Push Rod to Plunger 1 - ---- --- Seal, Plunger to Hub 1 - 2401 171 Seal, Adaptor to Hub 1 - 2401 172 Seal, Plunger, Sleeve to Hub 1 - ---- --- Seal, Valve 1 - ---- --- Seal, Valve to Plunger 1 - ---- --- Ring, Plunger Load Ring Retaining 1 - ---- --- Bellows, Front Housing to Hub 1 - 2467 575 Filter, Front Housing Air Intake 1 - 2401 858 Ring, Lever and Fulcrum Retaining 1 - 2467 585 Ring, Two-Stage Reaction

★ Indicates use as required.
⊟ Indicates parts not listed in any previous parts book.

MyMopar.com
Data and specifications subject to change without notice.

CODE	PART NAME AND PART NUMBER
5-100-1	Cont'd REPAIR PACKAGE, POWER BRAKE . . . . . Part No. 2525 437 Consists of: 1 - ---- --- Control Piston Complete 1 - ---- --- Ring, Control Piston Retaining 1 - 2530 005 Seal, Power Piston "O" Ring 1 - 2530 007 Ring, Power Piston Reaction 1 - ---- --- Washer, Power Piston Reaction Ring Bumper 1 - 2530 011 Diaphragm, Power Piston 1 - 2530 031 Seal, Cover to Power Piston 1 - 2530 033 Grommet, Vacuum Check Valve to Front Housing 1 - 2530 025 Seal, Front Housing to Guide 1 - ---- --- Lock, Front Housing to Cover 1 - 2530 020 Filter, Control Piston Push Rod Silencer and Air 1 - 2530 019 Boot, Control Piston Push Rod 1 - 2530 032 Vacuum Check Valve 1 - 2530 027 Filter, Front Housing Air Cleaner 1 - 2530 026 Retainer, Front Housing to Guide Seal
	REPAIR PACKAGE, POWER BRAKE POWER UNIT . Part No. 2525 007 Consists of: 1 - ---- --- Diaphragm and Backing Plate 1 - 2409 997 Hub to Diaphragm Backing Plate 1 - 2401 163 Seal, Adaptor to Rear Housing 1 - 2401 166 Retainer, Push to Plunger 1 - ---- --- Seal, Plunger to Hub 1 - 2401 171 Seal, Adaptor to Hub 1 - 2401 172 Seal, Plunger Sleeve to Hub 1 - ---- --- Valve 1 - ---- --- Seal, Valve to Plunger 1 - ---- --- Ring, Plunger Load Ring Retaining 1 - ---- --- Bellows, Front Housing to Hub 1 - 2467 575 Filter, Front Housing Air Intake 1 - 2401 858 Ring, Lever and Fulcrum Retaining 1 - 2401 866 Ring, Two Stage Reaction
	REPAIR PACKAGE, POWER BRAKE POWER UNIT . Part No. 2525 477 Consists of: 1 - ---- --- Control Piston Complete 1 - ---- --- Ring, Control Piston Retaining 1 - 2530 005 Seal, Power Piston "O" Ring 1 - 2530 007 Ring, Power Piston Reaction (Pkg. Cont'd)
5-100-1	Cont'd 1 - ---- --- Washer, Power Piston Reaction Ring Bumper 1 - 2530 011 Diaphragm, Power Piston 1 - 2530 033 Grommet, Vacuum Check Valve to Front Housing 1 - 2530 025 Seal, Front Housing to Guide 1 - ---- --- Lock, Front Housing to Cover 1 - 2530 020 - Filter, Control Piston Push Rod Silencer and Air 1 - 2530 019 Boot, Control Piston Push Rod 1 - 2530 032 Vacuum Check Valve 1 - 2530 027 Filter, Front Housing Air Cleaner 1 - 2530 031 Seal, Cover to Power Piston
5-100-152	KIT, POWER BRAKE PISTON PACKING . . . Part No. 2075 000 Consists of: 1 - ---- --- Expander, Piston Packing 1 - ---- --- Packing, Piston 1 - ---- --- Felt, Piston 1 - ---- --- Tube, Vacuum
5-100-157	PLATE PACKAGE, POWER BRAKE POWER UNIT DIAPHRAGM and PISTON . . . . . Part No. 2240 625 Consists of: 1 - ---- --- Plate, Diaphragm 1 - ---- --- Plate, Piston Rear
5-100-166	RETAINER and PLUNGER PACKAGE, POWER BRAKE POWER UNIT PUSH ROD . . . . . Part No. 2495 066 Consists of: 1 - 2401 166 Retainer, Push Rod to Plunger 1 - ---- --- Plunger 1 - ---- --- Spring, Exhaust Valve Return
5-105-1	PACKAGE, POWER BRAKE CHECK VALVE and GROMMET . . . . . Part No. 2495 067 Consists of: 1 - ---- --- Connector and Check Valve, Manifold Vacuum Hose 1 - 2467 576 Grommet Vacuum Connector to Front Housing
6-03-1	CLUTCH PACKAGE . . . Part No. 2279 894 Consists of: 1 - 2525 465 Cover and Pressure Plate 1 - 2298 904 Disc
6-17-3	LEVER PACKAGE . . . . Part No. 2240 634 Consists of: 3 - ---- --- Eye Bolt 3 - ---- --- Lever 3 - ---- --- Nut 3 - ---- --- Pin 3 - ---- --- Spring 3 - ---- --- Strut

MyMopar.com

CODE	PART NAME AND PART NUMBER
6-17-3	Cont'd LEVER PACKAGE . . . . Part No. 2495 052 Consists of: 3 - ---- --- Clip 3 - ---- --- Lever 3 - ---- --- Nut 3 - ---- --- Pin 3 - ---- --- Screw 3 - ---- --- Washer
	LEVER PACKAGE . . . . Part No. 2525 473 Consists of: 3 - ---- --- Clip 3 - ---- --- Lever 3 - ---- --- Nut 3 - ---- --- Pin 3 - ---- --- Screw 3 - ---- --- Washer
	LEVER PACKAGE . . . . Part No. 2525 030 Consists of: 3 - ---- --- Clip 3 - ---- --- Lever 3 - ---- --- Nut 3 - ---- --- Pin 3 - ---- --- Screw 3 - ---- --- Washer
7-42-1	PUMP PACKAGE, WATER . . . . . Part No. 2196 910 Consists of: 1 - ---- --- Pump 1 - 1947 523 Gasket
	PUMP PACKAGE, WATER . . . . . Part No. 2448 315 Consists of: 1 - ---- --- Pump 1 - 2129 013 Gasket 1 - ---- --- Bushing
	PUMP PACKAGE, WATER . . . . . Part No. 2448 326 Consists of: 1 - ---- --- Pump 1 - 1737 705 Gasket
	PUMP PACKAGE, WATER . . . . . Part No. 2448 328 Consists of: 1 - ---- --- Pump 1 - 1737 705 Gasket
	PUMP PACKAGE, WATER . . . . . Part No. 2525 098 Consists of: 1 - ---- --- Pump 1 - 2129 013 Gasket
7-42-4	REPAIR PACKAGE, WATER PUMP . . . . . Part No. 2298 907 Consists of: 1 - ---- --- Impeller 1 - ---- --- Shaft and Slinger 1 - 1947 521 Gasket (Pkg. Cont'd)
7-42-4	Cont'd 1 - 1947 523 Gasket 1 - 1947 671 Gasket 1 - 2120 955 Seal
	REPAIR PACKAGE, WATER PUMP . . . . . Part No. 2421 376 Consists of: 1 - ---- --- Shaft and Bearing 1 - 2120 955 Seal 1 - 2120 013 Gasket 1 - 2402 795 Impeller
	REPAIR PACKAGE, WATER PUMP . . . . . Part No. 2448 327 Consists of: 1 - ---- --- Shaft and Bearing 1 - ---- --- Impeller 1 - 1737 705 Gasket 1 - 2120 955 Seal
	REPAIR PACKAGE, WATER PUMP . . . . . Part No. 2448 329 Consists of: 1 - ---- --- Shaft and Bearing 1 - ---- --- Impeller 1 - 1737 705 Gasket 1 - 2120 955 Seal
	REPAIR PACKAGE, WATER PUMP . . . . . Part No. 2525 099 Consists of: 1 - ---- --- Shaft and Bearing 1 - ---- --- Impeller 1 - 2129 013 Gasket 1 - 2190 955 Seal
8-05-6	HOUSING and SEAL PACKAGE, READING LAMP . . . . . Part No. 2448 807 Consists of: 1 - ---- --- Housing 1 - 2440 873 Retainer, Housing 1 - ---- --- Seal, Housing
8-05-16	KNOB and SEAL PACKAGE, READING LAMP . . . . . Part No. 2448 808 Consists of: 1 - ---- --- Knob, Switch 1 - ---- --- Seal, Switch Knob
8-05-23	LENS and RETAINING RING PACKAGE, READING LAMP . . . . Part No. 2448 809 Consists of: 1 - ---- --- Lens 1 - ---- --- Ring, Lens Retaining
8-13-5	CONTACT, INSULATOR and SPRING PACKAGE, TRUNK LAMP SWITCH SOCKET . . . . . Part No. *2584 972 Consists of: 1 - ---- --- Contact 1 - ---- --- Insulator 1 - ---- --- Spring

★ Indicates use as required.
⊟ Indicates parts not listed in any previous parts book.
May 1965, Supersedes Sept. 4, 1964.

Prices and specifications subject to change without notice.
* Indicates change or addition.
Printed in U.S.A.

MyMopar.com

CODE	PART NAME AND PART NUMBER
8-15-3	BLOCK and CLIP PACKAGE, FUSE . . . . Part No. 2495 232 Consists of: 1 - ---- --- Block, Fuse 2 - ---- --- Clip, Wire Retaining
	BLOCK and CLIP PACKAGE, FUSE . . . . . Part No. 2495 538 Consists of: 1 - ---- --- Block, Fuse 2 - ---- --- Clip, Wire Retaining
	BLOCK and CLIP PACKAGE, FUSE . . . . Part No. 2584 922 Consists of: 1 - ---- --- Block, Fuse 1 - ---- --- Clip, Wire Retaining
8-27-61	CAP, ROTOR and CABLE PACKAGE, DISTRIBUTOR . . . . . Part No. 2448 273 Consists of: 1 - 2095 773 Cable 1 - 2098 765 Cap 1 - 2098 770 Rotor
8-27-77	SPRING and HINGE PACKAGE, DISTRIBUTOR CAP CLAMP . . . . . Part No. 1879 606 Consists of: 1 - ---- --- Spring and Hinge, Locating Clamp 1 - ---- --- Spring and Hinge, Clamp
	SPRING and HINGE PACKAGE, DISTRIBUTOR CAP CLAMP . . . . . Part No. *2586 577 Consists of: 1 - ---- --- Bracket 4 - ---- --- Rivet 3 - ---- --- Spring
8-27-85	CONTACT and SPRING PACKAGE, DISTRIBUTOR CAP PLUNGER . . . . Part No. 2084 655 Consists of: 1 - ---- --- Contact 1 - ---- --- Spring
8-27-133	BEARING and THRUST WASHER PACKAGE, DRIVE SHAFT . . . . . Part No. 1879 596 Consists of: 2 - ---- --- Bearing 1 - ---- --- Collar 1 - ---- --- Pin 3 - ---- --- Washer
	BEARING and THRUST WASHER PACKAGE, DRIVE SHAFT . . . . . Part No. 2275 229 Consists of: 2 - ---- --- Bearing 1 - ---- --- Collar 1 - 9414 181 Pin 2 - ---- --- Washer

CODE	PART NAME AND PART NUMBER
8-27-133	Cont'd BEARING and THRUST WASHER PACKAGE, DRIVE SHAFT . . . . . Part No. 2585 021 Consists of: 2 - ---- --- Bearing 1 - ---- --- Pin 1 - ---- --- Snap Ring 1 - ---- --- Spacer 3 - ---- --- Washer
8-27-137	COLLAR and PIN PACKAGE, DRIVE SHAFT . . . . . Part No. 2084 448 Consists of: 1 - ---- --- Collar 1 - 9414 181 Pin, Collar
	COLLAR and PIN PACKAGE, DRIVE SHAFT . . . . . Part No. 2585 022 Consists of: 1 - ---- --- Collar 1 - ---- --- Pin 1 - ---- --- Washer
8-27-278	WEIGHT PACKAGE, GOVERNOR . . . . . Part No. 1879 595 Consists of: 2 - ---- --- Weight
	WEIGHT PACKAGE, GOVERNOR . . . . . Part No. 1881 746 Consists of: 2 - ---- --- Weight
	WEIGHT PACKAGE, GOVERNOR . . . . . Part No. 1881 945 Consists of: 2 - ---- --- Weight
	WEIGHT PACKAGE, GOVERNOR . . . . . Part No. 1881 955 Consists of: 2 - ---- --- Weight
8-27-279	SPRING SET, GOVERNOR WEIGHT . . . . . Part No. 1881 946 Consists of: 2 - ---- --- Spring
	SPRING SET, GOVERNOR WEIGHT . . . . . Part No. 1881 956 Consists of: 2 - ---- --- Spring
	SPRING SET, GOVERNOR WEIGHT . . . . . Part No. 2084 301 Consists of: 2 - ---- --- Spring
	SPRING SET, GOVERNOR WEIGHT . . . . . Part No. 2084 866 Consists of: 2 - ---- --- Spring

★ Indicates use as required.
B Indicates parts not listed in any previous parts book.
* Indicates change or addition.

Printed in U.S.A.
Prices and specifications subject to change without notice.
March 1966 Supersedes May 1965.

MyMopar.com

CODE	PART NAME AND PART NUMBER
8-27-279	Cont'd SPRING SET, GOVERNOR WEIGHT . . . . . Part No. 2298 765 Consists of: 2 - ---- --- Spring SPRING SET, GOVERNOR WEIGHT . . . . . Part No. 2421 473 Consists of: 2 - ---- --- Spring SPRING SET, GOVERNOR WEIGHT . . . . . Part No. 2448 258 Consists of: 2 - --- --- Spring SPRING SET, GOVERNOR WEIGHT . . . . . Part No. 2448 259 Consists of: 2 - ---- --- Spring SPRING SET, GOVERNOR WEIGHT . . . . . Part No. 2525 251 Consists of: 2 - ---- --- Spring SPRING SET, GOVERNOR WEIGHT . . . . . Part No. 2525 266 Consists of: 2 - ---- -- Spring SPRING SET, GOVERNOR WEIGHT . . . . . Part No. 2525 538 Consists of: 2 - ---- --- Spring SPRING SET, GOVERNOR WEIGHT . . . . . Part No. 2584 844 Consists of: 2 - ---- --- Spring SPRING SET, GOVERNOR WEIGHT . . . . . Part No. 2585 018 Consists of: 2 - ---- --- Spring
8-27-297	FELT DISC and SNAP RING PACKAGE, CAM SLEEVE . . . . . Part No. 1879 607 Consists of: 1 - ---- --- Disc, Felt 1 - ---- --- Snap Ring
8-27-306	PARTS PACKAGE, VACUUM CHAMBER . . Part No. 2585 020 Consists of: 1 - ---- --- Gasket 1 - ---- --- Plug 8 - ---- --- Washer
8-27-308	CHAMBER PACKAGE, VACUUM . . . . . Part No. 2084 868 Consists of: 1 - ---- --- Chamber, Vacuum 1 - ---- --- Ring, Lock 1 - ---- --- Washer, Plain
8-27-315	PLUG and GASKET PACKAGE, VACUUM CHAMBER . . . . . Part No. 2299 319 Consists of: 1 - ---- --- Gasket 1 - ---- --- Plug
8-27-316	SPRING and WASHER PACKAGE, VACUUM CHAMBER . . . . . Part No. 1881 758 Consists of: 1 - ---- --- Spring 9 - ---- --- Washer SPRING and WASHER PACKAGE, VACUUM CHAMBER . . . . . Part No. 1881 766 Consists of: 1 - ---- --- Spring 9 - ---- --- Washer
8-27-352	GEAR and PIN PACKAGE, SHAFT . . . . . Part No. 2084 653 Consists of: 1 - ---- --- Gear 1 - 9414 181 Pin 1 - ---- --- Washer
8-29-17	BRUSH, WASHER and TERMINAL PACKAGE . Part No. 2084 673 Consists of: 2 - ---- --- Brush 1 - ---- --- Terminal, Field 1 - ---- --- Washer, Brush Mounting Insulator
8-29-99	RETAINER, WASHER and SLIP RING PACKAGE, ROTOR GREASE . . . . Part No. 2421 804 Consists of: 1 - ---- --- Retainer, Rotor Grease 1 - 2098 278 Ring, Rotor Slip 1 - ---- --- Washer, Rotor Grease Retainer
8-29-129	CAPACITOR and INSULATOR PACKAGE . . . . . Part No. 2421 137 Consists of: 1 - ---- --- Capacitor and Bolt 1 - ---- --- Insulator, Heat Sink 1 - ---- --- Insulator, Capacitor Bolt 2 - ---- --- Nut, Hex 2 - ---- --- Washer, Lock 1 - ---- --- Washer, Plain
8-29-145	SPACER PACKAGE, HEAT SINK . . . . . Part No. 2421 138 Consists of: 2 - ---- --- Spacer, Rectifier Heat Sink
8-32-2	HORN PACKAGE, UNIVERSAL, ELECTRIC AUTO LITE . Part No. 2421 486 Consists of: 1 - 2258 517 Bracket, Horn Mounting 1 - ---- --- Horn 1 - 120 622 Nut, Horn Terminal Screw 1 - 9417 273 Screw, Horn Terminal (Pkg. Cont'd)

● Indicates use as required.
⊟ Indicates parts not listed in any previous parts book.
May 1965. Supersedes Sept. 4, 1964.

MyMopar.com

Prices and specifications subject to change without notice.
Printed in U.S.A.
• Indicates change or addition.

CODE	PART NAME AND PART NUMBER
8-32-2	Cont'd 1 - 6023 253 Screw and Washer, Bracket to Car Mounting 1 - 2290 623 Screw and Washer, Bracket to Horn Mounting 1 - 121 752 Washer, Lock, Horn Terminal Screw SPARTON 1 - 2426 271 Bracket, Horn Mounting 1 - ---- --- Horn 1 - 120 622 Nut, Horn Terminal Screw 1 - 6023 253 Screw and Washer, Bracket to Car Mounting 3 - ---- --- Screw, Bracket to Horn Mounting 1 - 9417 273 Screw, Horn Terminal 3 - ---- --- Washer, Lock, Bracket to Horn Mounting Screw 1 - 121 752 Washer, Lock, Horn Terminal Screw HORN PACKAGE, UNIVERSAL, ELECTRIC AUTO LITE Part No. 2421 487 Consists of: 1 - 2258 517 Bracket, Horn Mounting 1 - ---- --- Horn 1 - 120 622 Nut, Horn Terminal Screw 1 - 9417 273 Screw, Horn Terminal 1 - 6023 253 Screw and Washer, Bracket to Car Mounting 1 - 2290 623 Screw and Washer, Bracket to Horn Mounting 1 - 121 752 Washer, Lock, Horn Terminal Screw SPARTON 1 - 2426 271 Bracket, Horn Mounting 1 - ---- --- Horn 1 - 120 622 Nut, Horn Terminal Screw 1 - 6023 253 Screw and Washer, Bracket to Car Mounting 3 - ---- --- Screw, Bracket to Horn Mounting 1 - 9417 273 Screw, Horn Terminal 3 - ---- --- Washer, Lock, Bracket to Horn Mounting Screw 1 - 121 752 Washer, Lock, Horn Terminal Screw
8-36-1	CABLE SET, IGNITION, RESISTOR TYPE . . . . Part No. 2495 510 Consists of: 6 - ---- --- Cable, Spark Plug 1 - 2095 773 Cable, Coil Secondary CABLE SET, RESISTOR TYPE . . . . . Part No. 2495 513 Consists of: 8 - ---- --- Cable, Spark Plug 1 - 2095 772 Cable, Coil Secondary CABLE SET, RESISTOR TYPE . . . . . Part No. 2495 514 Consists of: 8 - ---- --- Cable, Spark Plug 1 - 2095 772 Cable, Coil Secondary
8-36-1	Cont'd CABLE SET, RESISTOR TYPE . . . . . Part No. 2495 516 Consists of: 8 - ---- --- Cable, Spark Plug 1 - 2095 772 Cable, Coil Secondary CABLE SET, RESISTOR TYPE . . . . . Part No. 2525 537 Consists of: 8 - ---- --- Cable, Spark Plug 1 - 2444 469 Cable, Coil Secondary CABLE SET, METAL CORE . . . . . Part No. 2525 672 Consists of: 8 - ---- --- Cable, Spark Plug 1 - 2444 587 Cable, Coil Secondary CABLE SET, RESISTOR TYPE . . . . . Part No. 2584 965 Consists of: 8 - ---- --- Cable, Spark Plug 1 - 2095 772 Cable, Coil Secondary CABLE PACKAGE, 90° ELBOW, RESISTOR TYPE . . . . Part No. 2525 533 Consists of: 1 - ---- --- Cable 1 - 2098 980 Grommet 1 - 2095 766 Nipple 1 - 1717 314 Terminal CABLE PACKAGE, RESISTOR TYPE . . . . . Part No. 2525 534 Consists of: 1 - ---- --- Cable 1 - 2098 980 Grommet 1 - 2095 766 Nipple 1 - 1717 314 Terminal CABLE and TERMINAL PACKAGE, METAL CORE CONDUCTOR . . . . . Part No. 2525 673 Consists of: 1 - ---- --- Cable 1 - 2095 766 Nipple 1 - 676 872 Terminal
8-42-5	LENS PACKAGE, MAP LAMP . . . . . Part No. *2584 964 Consists of: 1 - ---- --- Lens 2 - ---- --- Nut
8-50-156	SOCKET and INSULATOR PACKAGE, FRONT FENDER TURN SIGNAL INDICATOR LAMP . . Part No. *2584 971 Consists of: 1 - ---- --- Contact 2 - ---- --- Insulator 1 - ---- --- Spring 1 - ---- --- Socket

★ Indicates use as required.
⊟ Indicates parts not listed in any previous parts book.
* Indicates change or addition.

MyMopar.com

Printed in U.S.A.
Prices and specifications subject to change without notice.
May 1965, Supersedes Sept. 4, 1964.

CODE	PART NAME AND PART NUMBER
8-50-170	LENS and GASKET PACKAGE, FRONT FENDER TURN SIGNAL INDICATOR LAMP, RIGHT . . . . . Part No. 2584 961 Consists of: 1 - ---- --- Gasket 1 - ---- --- Lens
	LENS and GASKET PACKAGE, FRONT FENDER TURN SIGNAL INDICATOR LAMP, LEFT . . . . . Part No. 2584 962 Consists of: 1 - ---- --- Gasket 1 - ---- --- Lens
8-50-175	LAMP PACKAGE, FRONT FENDER TURN SIGNAL INDICATOR, RIGHT . . . Part No. 2584 957 Consists of: 1 - ---- --- Cover and Studs 1 - ---- --- Housing and Lens 2 - 271 166 Nut
	LAMP PACKAGE, FRONT FENDER TURN SIGNAL INDICATOR, LEFT . . . Part No. 2584 958 Consists of: 1 - ---- --- Cover and Studs 1 - ---- --- Housing and Lens 2 - 271 166 Nut
	LAMP PACKAGE, FRONT FENDER TURN SIGNAL INDICATOR, RIGHT . . Part No. 2584 959 Consists of: 1 - ---- --- Insulator 1 - ---- --- Lamp 2 - 273 292 Nut
	LAMP PACKAGE, FRONT FENDER TURN SIGNAL INDICATOR, LEFT . . . Part No. 2584 960 Consists of: 1 - ---- --- Insulator 1 - ---- --- Lamp 2 - 273 292 Nut
8-50-334	LENS and GASKET PACKAGE, PARKING and TURN SIGNAL LAMP, RIGHT Part No. 2275 212 Consists of: 1 - 2093 350 Gasket, Lens 1 - ---- --- Lens
	LENS and GASKET PACKAGE, PARKING and TURN SIGNAL LAMP, LEFT . . . . . Part No. 2275 211 Consists of: 1 - 2093 350 Gasket, Lens 1 - ---- --- Lens
	LENS and GASKET PACKAGE, PARKING and TURN SIGNAL LAMP, RIGHT . . . . . Part No. 2448 651 Consists of: 1 - 2424 902 Gasket 1 - ---- --- Lens

CODE	PART NAME AND PART NUMBER
8-50-334	Cont'd LENS and GASKET PACKAGE, PARKING and TURN SIGNAL LAMP, LEFT . . . . . Part No. 2448 652 Consists of: 1 - 2424 902 Gasket 1 - ---- --- Lens
	LENS and GASKET PACKAGE, PARKING and TURN SIGNAL LAMP, RIGHT . . . . . Part No. 2448 825 Consists of: 1 - 2480 821 Gasket 1 - ---- --- Lens
	LENS and GASKET PACKAGE, PARKING and TURN SIGNAL LAMP, LEFT . . . . . Part No. 2448 826 Consists of: 1 - 2480 821 Gasket 1 - ---- --- Lens
	LENS and GASKET PACKAGE, PARKING AND TURN SIGNAL LAMP . . . . . Part No. 2525 257 Consists of: 1 - ---- --- Collimator 1 - 2483 336 Gasket 1 - ---- --- Lens
	LENS and GASKET PACKAGE, PARKING and TURN SIGNAL LAMP, RIGHT . . . . . Part No. 2525 258 Consists of: 1 - 2483 270 Gasket 1 - ---- --- Lens 1 - ---- --- Spacer
	LENS and GASKET PACKAGE, PARKING and TURN SIGNAL LAMP, LEFT . . . . . Part No. 2525 259 Consists of: 1 - 2483 270 Gasket 1 - ---- --- Lens 1 - ---- --- Spacer
	LENS and GASKET PACKAGE, PARKING and TURN SIGNAL LAMP, RIGHT . . . . . Part No. 2525 518 Consists of: 1 - 2445 998 Gasket 1 - ---- --- Lens 1 - ---- --- Spacer
	LENS and GASKET PACKAGE, PARKING and TURN SIGNAL LAMP, LEFT . . . . . Part No. 2525 519 Consists of: 1 - 2445 998 Gasket 1 - ---- --- Lens 1 - ---- --- Spacer

MyMopar.com

CODE	PART NAME AND PART NUMBER
8-50-334	Cont'd LENS and GASKET PACKAGE, PARKING and TURN SIGNAL LAMP, RIGHT . . . . . Part No. 2525 520 Consists of: 1 - 2445 998 Gasket 1 - ---- --- Lens 1 - ---- --- Spacer
	LENS and GASKET PACKAGE, PARKING and TURN SIGNAL LAMP, LEFT . . . . . Part No. 2525 521 Consists of: 1 - 2445 998 Gasket 1 - ---- --- Lens 1 - ---- --- Spacer
	LENS and GASKET PACKAGE, PARKING and TURN SIGNAL LAMP, RIGHT . . . . . Part No. 2525 649 Consists of: 1 - 2449 662 Gasket 1 - ---- --- Lens 1 - ---- --- Spacer
	LENS and GASKET PACKAGE, PARKING and TURN SIGNAL LAMP, LEFT . . . . . Part No. 2525 650 Consists of: 1 - 2449 662 Gasket 1 - ---- --- Lens 1 - ---- --- Spacer
	LENS and GASKET PACKAGE, PARKING and TURN SIGNAL LAMP . . . . . Part No. 2525 662 Consists of: 1 - 2524 519 Gasket 1 - ---- --- Lens
	LENS and GASKET PACKAGE, PARKING and TURN SIGNAL LAMP, RIGHT . . . . . Part No. 2525 676 Consists of: 1 - 2243 158 Gasket 1 - ---- --- Lens
	LENS and GASKET PACKAGE, PARKING and TURN SIGNAL LAMP, LEFT . . . . . Part No. 2525 677 Consists of: 1 - 2243 158 Gasket 1 - ---- --- Lens
	LENS and GASKET PACKAGE, PARKING and TURN SIGNAL LAMP, RIGHT . . . . . Part No. 2525 684 Consists of: 1 - 2449 670 Gasket 1 - ---- --- Lens
	LENS and GASKET PACKAGE, PARKING and TURN SIGNAL LAMP, LEFT . . . . . Part No. 2525 685 Consists of: 1 - 2449 670 Gasket 1 - ---- --- Lens
8-50-349	SOCKET PACKAGE, PARKING and TURN SIGNAL LAMP . . . . . Part No. 2525 669 Consists of: 1 - ---- --- Contact, Insulator and Spring Package 1 - ---- --- Socket
8-50-354	SPRING, INSULATOR and CONTACT PACKAGE, PARKING and TURN SIGNAL LAMP SOCKET . . . . . Part No. 2198 860 Consists of: 1 - ---- --- Contact 1 - ---- --- Insulator 1 - ---- --- Spring
	SPRING, INSULATOR and CONTACT PACKAGE, PARKING and TURN SIGNAL LAMP SOCKET . . . . Part No. *2584 972 Consists of: 1 - ---- --- Contact 1 - ---- --- Insulator 1 - ---- --- Spring
8-52-49	FORK and PIN PACKAGE, SHIFTING . . . . . Part No. 2084 093 Consists of: 1 - ---- --- Fork, Shifting 1 - 456 098 Pin, Roll
8-52-82	STOP, SNAP RING and STOP WASHER PACKAGE, PINION . . . . . Part No. 2448 804 Consists of: 1 - ---- --- Ring, Pinion Stop Snap 1 - ---- --- Stop, Pinion
8-52-87	ACTUATOR and RETAINING RING PACKAGE, CLUTCH SHIFTING . . . . . Part No. 2275 556 Consists of: 2 - ---- --- Actuator, Clutch Shifting 1 - 2095 130 Ring, Clutch Actuator Retaining
8-52-96	GEAR and SNAP RING PACKAGE, PINION SHAFT . . . . . Part No. 2275 557 Consists of: 1 - ---- --- Gear, Pinion Shaft 1 - 2095 117 Snap Ring, Pinion Shaft Gear Retaining 1 - ---- --- Washer, Pinion Shaft Gear Friction
8-52-98	THRUST WASHER and RETAINING RING PACKAGE, PINION SHAFT . . . . . Part No. 2275 558 Consists of: 1 - 6022 006 Ring, Pinion Shaft Retaining 2 - ---- --- Washer, Pinion Shaft Thrust
8-52-121	THRUST WASHER PACKAGE, ARMATURE . . . . . Part No. 2275 555 Consists of: 6 - ---- --- Washer

★ Indicates use as required.
⊟ Indicates parts not listed in any previous parts book.
* Indicates change or addition.

MyMopar.com

Printed in U.S.A.
Prices and specifications subject to change without notice.
May 1965, Supersedes Sept. 4, 1964.

CODE	PART NAME AND PART NUMBER
8-52-135	BRUSH PACKAGE . . . . Part No. 2525 529 Consists of: 2 - ---- --- Brush
8-52-137	PLATE and BRUSH PACKAGE, BRUSH HOLDER . . . . Part No. 2275 550 Consists of: 1 - ---- --- Brush, w/Terminal, Negative 1 - ---- --- Plate, Brush Holder
8-52-140	SPRING PACKAGE, BRUSH . . . . . Part No. 2084 666 Consists of: 4 - ---- --- Spring, Brush
8-52-180	THRUST WASHER PACKAGE, COMMUTATOR END . . Part No. 2240 529 Consists of: 10 - ---- --- Washer
8-52-214	FIELD SERIES and SHUNT COIL PACKAGE . . . . Part No. 2084 088 Consists of: 1 - ---- --- Coil, Field Series 1 - ---- --- Coil, Field Shunt
	FIELD SERIES and SHUNT COIL PACKAGE . . . . Part No. 2275 248 Consists of: 1 - ---- --- Coil, Field Series 1 - ---- --- Coil, Field Shunt 4 - ---- --- Insulator, Field Pole 1 - ---- --- Rivet, Field Series Coil Ground
	FIELD SERIES and SHUNT COIL PACKAGE . . . . Part No. 2421 474 Consists of: 1 - ---- --- Coil, Field Series 4 - ---- --- Insulator, Field Pole 1 - ---- --- Rivet, Field Series Coil Ground 1 - ---- --- Washer
8-52-341	CONTACT and COVER GASKET PACKAGE, SOLENOID. . . . . Part No. 2084 091 Consists of: 1 - ---- --- Contact, Solenoid 1 - ---- --- Gasket, Cover 1 - ---- --- Spring, Return 1 - ---- --- Spring, Solenoid Switch, Outer
8-52-342	CONTACT AND SPRING PACKAGE, SOLENOID SWITCH . . . . . Part No. 2275 553 Consists of: 1 - ---- --- Contact, Solenoid Switch 1 - ---- --- Spring, Solenoid Switch, Outer 1 - ---- --- Spring, Return
8-52-344	COVER and GASKET PACKAGE, SOLENOID . Part No. 2084 090 Consists of: 1 - ---- --- Cover 1 - ---- --- Gasket, Cover
8-52-345	SOLENOID PACKAGE . . Part No. 2275 554 Consists of: 1 - 120 622 Nut, Hex 1 - ---- --- Retainer, Solenoid Coil 1 - ---- --- Sleeve, Solenoid Coil 1 - ---- --- Solenoid 1 - ---- --- Washer, Solenoid Coil 1 - ---- --- Washer, Solenoid Terminal Relay Stud Insulating 1 - ---- --- Washer, Terminal Relay Stud
8-52-354	STUD PACKAGE, TERMINAL RELAY . . . . . Part No. 2084 094 Consists of: 1 - ---- --- Insulator, Relay Stud 1 - 120 622 Nut, Hex 1 - ---- --- Stud, Terminal Relay 1 - 9414 106 Washer, Lock 1 - ---- --- Washer, Relay Stud Spacing
	STUD PACKAGE, TERMINAL RELAY . . . . . Part No. 2421 837 Consists of: 1 - 6022 377 Screw, Grounding 1 - 2098 660 Seal, Solenoid Contact 1 - ---- --- Sealer, Brush Plate 1 - ---- --- Stud, Terminal Relay 1 - ---- --- Washer, Battery Stud Sealing 1 - ---- --- Washer, Relay Stud Insulating
8-52-372	STUD and WASHER PACKAGE, SOLENOID TERMINAL . Part No. 2275 551 Consists of: 1 - ---- --- Nut, Hex 1 - ---- --- Stud, Solenoid Battery 1 - ---- --- Washer, Solenoid Battery Stud Sealing 1 - ---- --- Washer, Solenoid Battery Terminal
8-55-1	LAMP PACKAGE, TAIL, STOP and TURN SIGNAL, RIGHT . . . . . Part No. 2525 539 Consists of: 1 - 151 567 Bulb 1 - ---- --- Housing 4 - 445 346 J-Nut 1 - ---- --- Lens and Bezel 4 - ---- --- Screw 4 - ---- --- Screw
	LAMP PACKAGE, TAIL, STOP and TURN SIGNAL, LEFT . . . . . Part No. 2525 540 Consists of: 1 - 151 567 Bulb 1 - ---- --- Housing 4 - 445 346 J-Nut 1 - ---- --- Lens and Bezel 4 - ---- --- Screw 4 - ---- --- Screw

● Indicates use as required.
⊟ Indicates parts not listed in any previous parts book.
May 1965, Supersedes Sept. 4, 1964.

MyMopar.com
Prices and specifications subject to change without notice.
Printed in U.S.A.
* Indicates change or addition.

CODE	PART NAME AND PART NUMBER
8-55-1	Cont'd LAMP PACKAGE, TAIL, STOP and TURN SIGNAL, RIGHT . . . . . Part No. 2525 543 Consists of: 1 - 151 567 Bulb 1 - ---- --- Housing 4 - 445 346 J-Nut 1 - ---- --- Lens and Bezel 4 - ---- --- Screw 4 - ---- --- Screw LAMP PACKAGE, TAIL, STOP and TURN SIGNAL LEFT . . . . . Part No. 2525 544 Consists of: 1 - 151 567 Bulb 1 - ---- --- Housing 4 - 445 346 J-Nut 1 - ---- --- Lens and Bezel 4 - ---- --- Screw 4 - ---- --- Screw LAMP PACKAGE, TAIL, RIGHT . . . . . Part No. 2525 692 Consists of: 1 - 2524 348 Base 1 - ---- --- Extension 1 - ---- --- Housing and Lens 3 - 6014 023 J-Nut 4 - ---- --- Screw 3 - 9414 742 Screw LAMP PACKAGE, TAIL, LEFT . . . . . Part No. 2525 693 Consists of: 1 - 2524 349 Base 1 - 2524 485 Extension 1 - ---- --- Housing and Lens 3 - 6014 023 J-Nut 4 - ---- --- Screw 3 - 9414 742 Screw LAMP PACKAGE, TAIL, STOP and TURN SIGNAL, RIGHT . . . . . Part No. 2584 850 Consists of: 1 - 2524 522 Base 1 - ---- --- Extension 1 - ---- --- Housing 3 - 6014 023 J-Nut 1 - ---- --- Plug 4 - ---- --- Screw 4 - 9414 742 Screw LAMP PACKAGE, TAIL, STOP and TURN SIGNAL LAMP, LEFT . . . . . Part No. 2584 851 Consists of: 1 - 2524 523 Base 1 - ---- --- Extension 1 - ---- --- Housing 3 - 6014 023 J-Nut 1 - ---- --- Plug 4 - ---- --- Screw 4 - 9414 742 Screw

CODE	PART NAME AND PART NUMBER
8-55-1	Cont'd LAMP PACKAGE, TAIL, STOP, TURN SIGNAL and BACK-UP, RIGHT . . . Part No. 2584 852 Consists of: 1 - 2524 522 Base 1 - ---- --- Extension 1 - ---- --- Housing, w/Lens 3 - 6014 023 J-Nut 4 - ---- --- Screw 4 - 9414 742 Screw LAMP PACKAGE, TAIL, STOP, TURN SIGNAL and BACK-UP, LEFT . . . Part No. 2584 853 Consists of: 1 - 2524 523 Base 1 - ---- --- Extension 3 - 6014 023 J-Nut 1 - ---- --- Lens, w/Housing 4 - ---- --- Screw 4 - 9414 742 Screw LAMP PACKAGE, TAIL, STOP, TURN SIGNAL and BACK-UP, RIGHT . . . Part No. *2585 119 Consists of: 1 - 2575 109 Cover 1 - 2524 730 Gasket 1 - ---- --- Lamp 4 - 6023 202 Nut LAMP PACKAGE, TAIL, STOP, TURN SIGNAL and BACK-UP, LEFT . . . . Part No. *2585 120 Consists of: 1 - 2575 109 Cover 1 - 2524 731 Gasket 1 - ---- --- Lamp 4 - 6023 202 Nut LAMP PACKAGE, TAIL, STOP and TURN SIGNAL, RIGHT . . . . . Part No. 2584 862 Consists of: 1 - ---- --- Housing 4 - 6023 111 J-Nut 1 - ---- --- Lens 4 - ---- --- Screw 2 - 6024 495 Screw 2 - 6024 855 Screw LAMP PACKAGE, TAIL, STOP and TURN SIGNAL, LEFT . . . . . Part No. 2584 863 Consists of: 1 - ---- --- Housing 4 - 6023 111 J-Nut 1 - ---- --- Lens 4 - ---- --- Screw 2 - 6024 495 Screw 2 - 6024 855 Screw

★ Indicates use as required.
⊟ Indicates parts not listed in any previous parts book.
* Indicates change or addition.

Printed in U.S.A.
Prices and specifications subject to change without notice.
March 1966 Supersedes May 1965.
MyMopar.com

CODE	PART NAME AND PART NUMBER
8-55-1	Cont'd LAMP PACKAGE, TAIL, STOP and TURN SIGNAL, RIGHT . . . . . Part No. 2584 871 Consists of: 1 - ---- --- Housing 4 - 6023 111 J-Nut 1 - ---- --- Lens 4 - ---- --- Screw 1 - ---- --- Screw 2 - 9414 510 Screw LAMP PACKAGE, TAIL, STOP and TURN SIGNAL, LEFT . . . . . Part No. 2584 872 Consists of: 1 - ---- --- Housing 4 - 6023 111 J-Nut 1 - ---- --- Lens 4 - ---- --- Screw 1 - ---- --- Screw 2 - 9414 510 Screw LAMP PACKAGE, TAIL, RIGHT . . . . . Part No. 2584 879 Consists of: 1 - ---- --- Housing 4 - 6023 111 J-Nut 1 - ---- --- Lens 4 - ---- --- Screw 4 - ---- --- Screw 2 - 9418 486 Screw LAMP PACKAGE, TAIL, LEFT . . . . . Part No. 2584 880 Consists of: 1 - ---- --- Housing 4 - 6023 111 J-Nut 1 - ---- --- Lens 4 - ---- --- Screw 4 - ---- --- Screw 2 - 9418 486 Screw LAMP PACKAGE, TAIL, STOP and TURN SIGNAL Part No. 2584 886 Consists of: 1 - 151 567 Bulb 1 - 2483 390 Housing 4 - 6023 111 J-Nut 1 - ---- --- Lens 4 - ---- --- Screw 4 - ---- --- Screw LAMP PACKAGE, TAIL Part No. 2584 888 Consists of: 1 - 142 450 Bulb 1 - 2483 396 Housing 2 - 6023 111 J-Nut 1 - ---- --- Lens 4 - ---- --- Screw 2 - ---- --- Screw 2 - 6022 007 Washer

CODE	PART NAME AND PART NUMBER
8-55-57	SOCKET PACKAGE, TAIL, STOP and TURN SIGNAL LAMP . . . . . Part No. 2525 669 Consists of: 1 - ---- --- Contact, Insulator and Spring Package 1 - ---- --- Socket
8-55-63	SPRING, INSULATOR and CONTACT PACKAGE, TAIL, STOP and TURN SIGNAL LAMP SOCKET. .Part No. *2584 972 Consists of: 1 - ---- --- Contact 1 - ---- --- Insulator 1 - ---- --- Spring
8-55-136	HOUSING PACKAGE, TAIL, STOP, TURN SIGNAL and BACK-UP LAMP, RIGHT . . . . . Part No. 2525 600 Consists of: 1 - 151 567 Bulb, Tail, Stop and Turn Signal Lamp 1 - ---- --- Gasket, Reflector 1 - ---- --- Housing 3 - 6014 023 J-Nut 1 - ---- --- Lens, Back-Up Lamp 1 - ---- --- Lens, Tail, Stop and Turn Signal Lamp 5 - 9415 893 Screw 3 - ---- --- Screw HOUSING PACKAGE, TAIL, STOP, TURN SIGNAL and BACK-UP LAMP, LEFT . . . . . Part No. 2525 601 Consists of: 1 - 151 567 Bulb, Tail, Stop and Turn Signal Lamp 1 - ---- --- Gasket, Reflector 1 - ---- --- Housing 3 - 6014 023 J-Nut 1 - ---- --- Lens, Back-Up Lamp 1 - ---- --- Lens, Tail, Stop and Turn Signal Lamp 5 - 9415 893 Screw 3 - ---- --- Screw HOUSING PACKAGE, TAIL, STOP and TURN SIGNAL LAMP, RIGHT . . . . Part No. *2525 643 Consists of: 1 - ---- --- Housing 4 - 6023 202 Nut

★ Indicates use as required.
⊟ Indicates parts not listed in any previous parts book.
May 1965, Supersedes Sept. 4, 1964.

MyMopar.com

Printed in U.S.A.
Prices and specifications subject to change without notice.
* Indicates change or addition.

CODE	PART NAME AND PART NUMBER
8-55-136	Cont'd HOUSING PACKAGE, TAIL, STOP and TURN SIGNAL LAMP, LEFT . . . . . Part No. 2525 644 Consists of: 1 - ---- --- Housing 4 - 6023 202 Nut HOUSING PACKAGE, TAIL, STOP and TURN SIGNAL LAMP . . . . . Part No. 2525 682 Consists of: 1 - ---- --- Housing 4 - 6023 111 J-Nut 1 - ---- --- Lens and Bezel 4 - ---- --- Screw 4 - 9413 272 Screw HOUSING PACKAGE, TAIL, STOP and TURN SIGNAL LAMP . . . . Part No. 2525 683 Consists of: 1 - ---- --- Housing 4 - 6023 111 J-Nut 1 - ---- --- Lens 4 - ---- --- Screw 4 - 9413 272 Screw
8-55-158	BEZEL and GASKET PACKAGE, TAIL, STOP, TURN SIGNAL and BACK-UP LAMP, RIGHT . . . Part No. 2525 500 Consists of: 1 - ---- --- Bezel 1 - ---- --- Gasket 1 - ---- --- Gasket BEZEL and GASKET PACKAGE, TAIL, STOP, TURN SIGNAL and BACK-UP LAMP, LEFT . . . Part No. 2525 501 Consists of: 1 - ---- --- Bezel 1 - ---- --- Gasket 1 - ---- --- Gasket BEZEL, LENS and GASKET PACKAGE, TAIL, STOP and TURN SIGNAL LAMP, RIGHT . . . . . Part No. 2525 524 Consists of: 1 - ---- --- Gasket 1 - ---- --- Lens and Bezel BEZEL, LENS and GASKET PACKAGE, TAIL, STOP and TURN SIGNAL LAMP, LEFT . . . . . Part No. 2525 525 Consists of: 1 - ---- --- Gasket 1 - ---- --- Lens and Bezel
8-55-158	Cont'd BEZEL, LENS and GASKET PACKAGE, TAIL, STOP and TURN SIGNAL LAMP, RIGHT . . . . . Part No. 2525 526 Consists of: 1 - ---- --- Gasket 1 - ---- --- Lens and Bezel BEZEL, LENS and GASKET PACKAGE, TAIL, STOP and TURN SIGNAL LAMP, LEFT . . . . . Part No. 2525 527 Consists of: 1 - ---- --- Gasket 1 - ---- --- Lens and Bezel BEZEL, LENS and GASKET PACKAGE, TAIL, STOP and TURN SIGNAL LAMP, RIGHT . . . . . Part No. 2525 541 Consists of: 1 - 2449 691 GASKET 1 - ---- --- Lens and Bezel BEZEL, LENS and GASKET PACKAGE, TAIL, STOP and TURN SIGNAL LAMP, LEFT . . . . . Part No. 2525 542 Consists of: 1 - 2449 691 Gasket 1 - ---- --- Lens and Bezel BEZEL, LENS and GASKET PACKAGE, TAIL, STOP and TURN SIGNAL LAMP, RIGHT . . . . . Part No. 2525 545 Consists of: 1 - 2449 679 Gasket 1 - ---- --- Lens and Bezel BEZEL, LENS and GASKET PACKAGE, TAIL, STOP and TURN SIGNAL LAMP, LEFT . . . . . Part No. 2525 546 Consists of: 1 - 2449 679 Gasket 1 - ---- --- Lens and Bezel BEZEL, LENS and GASKET PACKAGE, TAIL LAMP . Part No. 2584 887 Consists of: 1 - 2449 653 Gasket 1 - ---- --- Lens
8-55-194	LENS, COLLIMATOR and GASKET PACKAGE, TAIL, STOP and TURN SIGNAL LAMP, RIGHT . . . . . Part No. 2448 842 Consists of: 1 - ---- --- Collimator 1 - ---- --- Gasket 1 - ---- --- Lens

★ Indicates use as required.
8 Indicates parts not listed in any previous parts book.
• Indicates change or addition.

Printed in U.S.A.
Prices and specifications subject to change without notice.
March 1966 Supersedes May 1965.
MyMopar.com

CODE	PART NAME AND PART NUMBER
8-55-194	Cont'd LENS, COLLIMATOR and GASKET PACKAGE, TAIL, STOP and TURN SIGNAL LAMP, LEFT . . . . . Part No. 2448 843 Consists of: 1 - ---- --- Collimator 1 - ---- --- Gasket 1 - ---- --- Lens
	LENS and GASKET PACKAGE, TAIL, STOP and TURN SIGNAL LAMP, RIGHT . Part No. 2525 263 Consists of: 1 - ---- --- Gasket 1 - ---- --- Lens
	LENS and GASKET PACKAGE, TAIL, STOP and TURN SIGNAL LAMP, LEFT . Part No. 2525 264 Consists of: 1 - ---- --- Gasket 1 - ---- --- Lens
	LENS and GASKET PACKAGE, TAIL, STOP and TURN SIGNAL LAMP, RIGHT . Part No. 2525 502 Consists of: 1 - ---- --- Gasket 1 - ---- --- Lens
	LENS and GASKET PACKAGE, TAIL, STOP and TURN SIGNAL LAMP, LEFT . Part No. 2525 503 Consists of: 1 - ---- --- Gasket 1 - ---- --- Lens
	LENS and GASKET PACKAGE, TAIL, STOP and TURN SIGNAL LAMP, RIGHT . Part No. 2525 602 Consists of: 1 - 2449 622 Gasket 1 - ---- --- Lens
	LENS and GASKET PACKAGE, TAIL, STOP and TURN SIGNAL LAMP, LEFT . Part No. 2525 603 Consists of: 1 - 2449 622 Gasket 1 - ---- --- Lens
	LENS and GASKET PACKAGE, TAIL, STOP and TURN SIGNAL LAMP, RIGHT . Part No. 2525 645 Consists of: 1 - ---- --- Gasket 1 - ---- --- Lens
	LENS and GASKET PACKAGE, TAIL, STOP and TURN SIGNAL LAMP, LEFT . Part No. 2525 646 Consists of: 1 - ---- --- Gasket 1 - ---- --- Lens

CODE	PART NAME AND PART NUMBER
8-55-194	Cont'd LENS and GASKET PACKAGE, TAIL, STOP and TURN SIGNAL LAMP . . . . . Part No. 2525 680 Consists of: 1 - 2449 635 Gasket 1 - ---- --- Lens and Bezel
	LENS and GASKET PACKAGE, TAIL, STOP and TURN SIGNAL LAMP . . . . Part No. 2525 681 Consists of: 1 - 2449 635 Gasket 1 - ---- --- Lens
	LENS and GASKET PACKAGE, TAIL LAMP, RIGHT . . Part No. 2525 686 Consists of: 1 - 2524 390 Gasket 1 - ---- --- Lens
	LENS and GASKET PACKAGE, TAIL LAMP, LEFT . . Part No. 2525 687 Consists of: 1 - 2524 390 Gasket 1 - ---- --- Lens
	LENS and GASKET PACKAGE, TAIL, STOP and TURN SIGNAL LAMP, RIGHT . Part No. 2525 688 Consists of: 1 - 2524 367 Gasket 1 - ---- --- Lens
	LENS and GASKET PACKAGE, TAIL, STOP and TURN SIGNAL LAMP, LEFT . Part No. 2525 689 Consists of: 1 - 2524 367 Gasket 1 - ---- --- Lens
	LENS and GASKET PACKAGE, TAIL, STOP, TURN SIGNAL and BACK-UP LAMP, RIGHT . . . . . Part No. 2525 690 Consists of: 1 - 2524 367 Gasket 1 - ---- --- Lens
	LENS and GASKET PACKAGE, TAIL, STOP, TURN SIGNAL and BACK-UP LAMP, LEFT . . . . . Part No. 2525 691 Consists of: 1 - 2524 367 Gasket 1 - ---- --- Lens
	LENS and GASKET PACKAGE, TAIL LAMP, RIGHT . . Part No. 2525 694 Consists of: 1 - 2524 328 Gasket 1 - ---- --- Lens and Bezel
	LENS and GASKET PACKAGE, TAIL LAMP, LEFT . . . Part No. 2525 695 Consists of: 1 - 2524 328 Gasket 1 - ---- --- Lens and Bezel

★ Indicates use as required.
⊟ Indicates parts not listed in any previous parts book.
March 1966 Supersedes Sept. 4, 1964.

MyMopar.com

Prices and specifications subject to change without notice.
* Indicates change or addition.
Printed in U.S.A.

CODE	PART NAME AND PART NUMBER
8-55-194	Cont'd LENS and GASKET PACKAGE, TAIL, STOP, TURN SIGNAL and BACK-UP LAMP, RIGHT . . . . . Part No. 2525 696 Consists of: 1 - 2524 410 Gasket 1 - ---- --- Lens LENS and GASKET PACKAGE, TAIL, STOP, TURN SIGNAL and BACK-UP LAMP, LEFT . . . . . Part No. 2525 697 Consists of: 1 - 2524 410 Gasket 1 - ---- --- Lens LENS and GASKET PACKAGE, TAIL, STOP and TURN SIGNAL LAMP, RIGHT . Part No. 2525 698 Consists of: 1 - 2524 410 Gasket 1 - ---- --- Lens LENS and GASKET PACKAGE, TAIL, STOP and TURN SIGNAL LAMP, LEFT . Part No. 2525 699 Consists of: 1 - 2524 410 Gasket 1 - ---- --- Lens LENS and GASKET PACKAGE, TAIL, STOP and TURN SIGNAL LAMP, RIGHT . Part No. 2584 857 Consists of: 1 - 2449 804 Gasket 1 - 2524 730 Gasket, Panel 1 - ---- --- Lens LENS and GASKET PACKAGE, TAIL, STOP and TURN SIGNAL LAMP, LEFT . Part No. 2584 858 Consists of: 1 - 2449 804 Gasket 1 - 2524 731 Gasket, Panel 1 - ---- --- Lens LENS and GASKET PACKAGE, TAIL, STOP and TURN SIGNAL LAMP . . . . . Part No. 2584 861 Consists of: 1 - 2449 813 Gasket 1 - ---- --- Lens LENS and GASKET PACKAGE, TAIL, STOP and TURN SIGNAL LAMP, RIGHT . Part No. 2584 864 Consists of: 1 - 2524 166 Gasket 1 - 2524 170 Gasket 1 - ---- --- Lens

CODE	PART NAME AND PART NUMBER
8-55-194	Cont'd LENS and GASKET PACKAGE, TAIL, STOP and TURN SIGNAL LAMP, LEFT . Part No. 2584 865 Consists of: 1 - 2524 166 Gasket 1 - 2524 170 Gasket 1 - ---- --- Lens LENS and GASKET PACKAGE, TAIL, STOP and TURN SIGNAL LAMP, RIGHT . Part No. 2584 869 Consists of: 1 - 2449 821 Gasket 1 - ---- --- Lens LENS and GASKET PACKAGE, TAIL, STOP and TURN SIGNAL LAMP, LEFT . Part No. 2584 870 Consists of: 1 - 2449 821 Gasket 1 - ---- --- Lens LENS and GASKET PACKAGE, TAIL LAMP, RIGHT . . Part No. 2584 875 Consists of: 1 - 2449 839 Gasket 1 - ---- --- Lens LENS and GASKET PACKAGE, TAIL LAMP, LEFT . . Part No. 2584 876 Consists of: 1 - 2449 839 Gasket 1 - ---- --- Lens LENS and GASKET PACKAGE, TAIL LAMP, RIGHT . Part No. 2584 877 Consists of: 1 - 2449 839 Gasket 1 - ---- --- Lens LENS and GASKET PACKAGE, TAIL, STOP and TURN SIGNAL LAMP, RIGHT . Part No. 2584 883 Consists of: 1 - 2524 122 Gasket, Housing 1 - 2524 123 Gasket, Lens 1 - ---- --- Lens LENS and GASKET PACKAGE, TAIL, STOP and TURN SIGNAL LAMP, LEFT . Part No. 2584 884 Consists of: 1 - 2524 122 Gasket, Housing 1 - 2524 123 Gasket, Lens 1 - ---- --- Lens LENS and GASKET PACKAGE, TAIL, STOP and TURN SIGNAL LAMP . . . . . Part No. 2584 885 Consists of: 1 - 2449 643 Gasket 1 - ---- --- Lens

MyMopar.com

CODE	PART NAME AND PART NUMBER
8-55-198	FILTER PACKAGE, TAIL, STOP and TURN SIGNAL LAMP . . . . . Part No. *2586 757 Consists of: 1 - ---- --- Filter 1 - ---- --- Gasket 1 - ---- --- Retainer
8-56-8	LENS and GASKET PACKAGE, BACK-UP LAMP, RIGHT Part No. 2421 802 Consists of: 1 - ---- --- Gasket, Lens 1 - ---- --- Lens
	LENS and GASKET PACKAGE, BACK-UP LAMP, LEFT . . . . . Part No. 2421 803 Consists of: 1 - ---- --- Gasket, Lens 1 - ---- --- Lens
	LENS and GASKET PACKAGE, BACK-UP LAMP, RIGHT . . . . . Part No. 2421 805 Consists of: 1 - ---- --- Gasket, Lens 1 - ---- --- Lens
	LENS and GASKET PACKAGE, BACK-UP LAMP, LEFT . . . . . Part No. 2421 806 Consists of: 1 - ---- --- Gasket, Lens 1 - ---- --- Lens
	LENS and GASKET PACKAGE, BACK-UP LAMP, RIGHT . . . . . Part No. 2448 840 Consists of: 1 - ---- --- Collimator 1 - ---- --- Gasket 1 - ---- --- Lens
	LENS and GASKET PACKAGE, BACK-UP LAMP, LEFT . . . . . Part No. 2448 841 Consists of: 1 - ---- --- Collimator 1 - ---- --- Gasket 1 - ---- --- Lens
	LENS and GASKET PACKAGE, BACK-UP LAMP, RIGHT . . . . . Part No. 2525 261 Consists of: 1 - 2483 309 Gasket 1 - ---- --- Lens
	LENS and GASKET PACKAGE, BACK-UP LAMP, LEFT . . . . . Part No. 2525 262 Consists of: 1 - 2483 309 Gasket 1 - ---- --- Lens

CODE	PART NAME AND PART NUMBER
8-56-8	Cont'd LENS and GASKET PACKAGE, BACK-UP LAMP, RIGHT Part No. 2525 506 Consists of: 1 - ---- --- Gasket 1 - ---- --- Lens
	LENS and GASKET PACKAGE, BACK-UP LAMP, LEFT . . . . . Part No. 2525 507 Consists of: 1 - ---- --- Gasket 1 - ---- --- Lens
	LENS and GASKET PACKAGE, BACK-UP LAMP, RIGHT . . . . . Part No. 2525 508 Consists of: 1 - ---- --- Gasket 1 - ---- --- Lens
	LENS and GASKET PACKAGE, BACK-UP LAMP, LEFT . . . . . Part No. 2525 509 Consists of: 1 - ---- --- Gasket 1 - ---- --- Lens
	LENS and GASKET PACKAGE, BACK-UP LAMP, RIGHT . . . . . Part No. 2525 510 Consists of: 1 - ---- --- Gasket 1 - ---- --- Lens
	LENS and GASKET PACKAGE, BACK-UP LAMP, LEFT . . . . . Part No. 2525 511 Consists of: 1 - ---- --- Gasket 1 - ---- --- Lens
	LENS and GASKET PACKAGE, BACK-UP LAMP . . . . Part No. 2525 516 Consists of: 1 - ---- --- Gasket 1 - ---- --- Lens
	LENS and GASKET PACKAGE, BACK-UP LAMP, RIGHT . . . . . Part No. 2525 522 Consists of: 1 - ---- --- Gasket 1 - ---- --- Lens
	LENS and GASKET PACKAGE, BACK-UP LAMP, LEFT . . . . . Part No. 2525 523 Consists of: 1 - ---- --- Gasket 1 - ---- --- Lens
	LENS and GASKET PACKAGE, BACK-UP LAMP . . . . Part No. 2525 604 Consists of: 1 - ---- --- Gasket 1 - ---- --- Lens and Reflector

★ Indicates use as required.
⊟ Indicates parts not listed in any previous parts book.
March 1966 Supersedes Sept. 4, 1964.

MyMopar.com

Printed in U.S.A.
Prices and specifications subject to change without notice.
* Indicates change or addition.

CODE	PART NAME AND PART NUMBER
8-56-8	Cont'd LENS and GASKET PACKAGE, BACK-UP LAMP . . . . Part No. 2525 647 Consists of: 1 - ---- --- Gasket 1 - ---- --- Lens and Reflector LENS and GASKET PACKAGE, BACK-UP LAMP, RIGHT . . . . . Part No. 2584 855 Consists of: 1 - 2449 805 Gasket 1 - 2524 730 Gasket, Panel 1 - ---- --- Lens LENS and GASKET PACKAGE, BACK-UP LAMP, LEFT . . . . . Part No. 2584 856 Consists of: 1 - 2449 805 Gasket 1 - 2524 731 Gasket, Panel 1 - ---- --- Lens LENS and GASKET PACKAGE, BACK-UP LAMP . . . . Part No. 2584 866 Consists of: 1 - 2524 167 Gasket 1 - 2524 168 Gasket 1 - 2524 164 Lens
8-56-27	SPRING, INSULATOR and CONTACT PACKAGE, BACK-UP LAMP SOCKET . . . . . Part No. 2584 972 Consists of: 1 - ---- --- Contact 1 - ---- --- Insulator 1 - ---- --- Spring
8-57-54	LENS and GASKET PACKAGE, LICENSE LAMP . . . . Part No. 2525 517 Consists of: 1 - 2449 518 Gasket 1 - ---- --- Lens LENS and GASKET PACKAGE, LICENSE LAMP . . . . Part No. 2525 674 Consists of: 1 - 2575 042 Gasket 1 - ---- --- Lens
8-57-89	SPRING, INSULATOR and CONTACT PACKAGE, LICENSE LAMP SOCKET Part No. 2584 972 Consists of: 1 - ---- --- Contact 1 - ---- --- Insulator 1 - ---- --- Spring
9-01-5	GASKET SET, ENGINE . . Part No. 2585 200 Consists of: 1 - 1947 797 Gasket, Air Cleaner to Carburetor 1 - 1947 554 Gasket, Chain Case Cover 1 - 1947 578 Gasket, Cylinder Head (Pkg. Cont'd)

CODE	PART NAME AND PART NUMBER
9-01-5	Cont'd. 1 - 2406 625 Gasket, Cylinder Head Cover 1 - 2121 244 Gasket, Cylinder Head Cover 1 - 1947 671 Gasket, Cylinder Water Outlet Elbow 1 - 2465 391 Gasket, Exhaust Pipe Flange 1 - 1400 185 Gasket, Fuel Pump Flange 1 - 1947 762 Gasket, Intake and Exhaust Manifold 1 - 2268 264 Gasket, Intake to Exhaust Manifold 1 - ---- --- Gasket, Oil Pan, Front 1 - ---- --- Gasket, Oil Pan, Rear 1 - ---- --- Gasket, Oil Pan, Left 1 - ---- --- Gasket, Oil Pan, Right 1 - 618 622 Gasket, Oil Pressure Relief Valve Cap 1 - 2121 404 Gasket, Oil Pump Body 1 - 1947 521 Gasket, Water Pump Body 1 - 1947 523 Gasket, Water Pump Intermediate Plate 6 - 2205 958 Shield, Intake Valve Stem Oil 6 - 2205 959 Shield, Exhaust Valve Stem Oil GASKET SET, ENGINE Part No. 2585 202 Consists of: 1 - 2129 012 Gasket, Chain Case Cover 2 - 2525 062 Gasket, Cylinder Head 2 - 2128 407 Gasket, Cylinder Head Cover 1 - 50 082 Gasket, Cylinder Water Outlet 2 - 1670 508 Gasket, Exhaust Manifold 2 - 1636 570 Gasket, Exhaust Pipe Flange 1 - 1400 185 Gasket, Fuel Pump Flange 1 - 1326 836 Gasket, Ignition Distributor 2 - ---- --- Gasket, Intake Manifold 1 - ---- --- Gasket, Intake Manifold-Front 1 - ---- --- Gasket, Intake Manifold-Rear 2 - ---- --- Gasket, Oil Pan 2 - ---- --- Gasket, Oil Pan-End 1 - 2129 013 Gasket, Water Pump Body 8 - 2205 958 Shield, Intake Valve Stem Oil 8 - 2205 959 Shield, Exhaust Valve Stem Oil GASKET SET, ENGINE . Part No. 2585 204 Consists of: 1 - 2129 012 Gasket, Chain Case Cover 2 - 2463 338 Gasket, Cylinder Head 2 - 2463 290 Gasket, Cylinder Head Cover 1 - 50 082 Gasket, Cylinder Water Outlet 1 - 2465 845 Gasket, Exhaust Manifold Left, w/Heat Shield 2 - 2465 842 Gasket, Exhaust Manifold, Right 1 - 1400 185 Gasket, Fuel Pump Flange 1 - 1326 836 Gasket, Ignition Distributor 2 - ---- --- Gasket, Intake Manifold (Pkg. Cont'd)

★ Indicates use as required.
⊟ Indicates parts not listed in any previous parts book.
* Indicates change or addition.

Printed in U.S.A.
Prices and specifications subject to change without notice.
March 1966 Supersedes May 1965.

MyMopar.com

CODE	PART NAME AND PART NUMBER
9-01-5	Cont'd
	1 - ---- --- Gasket, Intake Manifold, Front
	1 - ---- --- Gasket, Intake Manifold, Rear
	2 - ---- --- Gasket, Oil Pan
	2 - ---- --- Gasket, Oil Pan, End
	2 - 2129 013 Gasket, Water Pump Body
	16 - 2205 958 Shield, Valve Stem Oil
	GASKET SET, ENGINE . Part No. 2585 206
	Consists of:
	1 - 2264 794 Gasket, Chain Case Cover
	2 - 1851 579 Gasket, Cylinder Head
	2 - 2463 168 Gasket, Cylinder Head Cover
	2 - 2406 031 Gasket, Cylinder Head Cover
	1 - 50 082 Gasket, Cylinder Water Outlet Elbow
	2 - 1821 640 Gasket, Exhaust Pipe Flange
	2 - 2465 391 Gasket, Exhaust Pipe Flange
	1 - 1400 185 Gasket, Fuel Pump Flange
	1 - 1326 836 Gasket, Ignition Distributor
	1 - 1737 709 Gasket, Intake Manifold
	1 - 1737 770 Gasket, Oil Pan
	1 - 618 622 Gasket, Oil Pressure Relief Valve Cap
	1 - ---- --- Gasket, Oil Pump Body
	1 - 1737 705 Gasket, Water Pump Body
	2 - 1737 761 Gasket, Water Pump to Cylinder Block
	1 - 1855 328 Seal, Oil Pump Body
	16 - 2121 686 Shield, Valve Stem Oil
	GASKET SET, ENGINE . Part No. 2585 208
	Consists of:
	1 - 2264 794 Gasket, Chain Case Cover
	2 - 1851 579 Gasket, Cylinder Head
	2 - 2463 168 Gasket, Cylinder Head Cover
	2 - 2406 031 Gasket, Cylinder Head Cover
	1 - 50 082 Gasket, Cylinder Water Outlet Elbow
	2 - 1821 640 Gasket, Exhaust Pipe Flange
	2 - 2465 391 Gasket, Exhaust Pipe Flange
	1 - 1400 185 Gasket, Fuel Pump Flange
	1 - 1326 836 Gasket, Ignition Distributor
	1 - 1851 664 Gasket, Intake Manifold
	1 - 1737 770 Gasket, Oil Pan
	1 - 618 622 Gasket, Oil Pressure Relief Valve Cap
	1 - ---- --- Gasket, Oil Pump Body
	1 - 1737 705 Gasket, Water Pump Body
	2 - 1737 761 Gasket, Water Pump to Cylinder Block
	1 - 1855 328 Seal, Oil Pump Body
	16 - 2121 686 Shield, Valve Stem Oil

CODE	PART NAME AND PART NUMBER
9-01-5	Cont'd
	GASKET SET, ENGINE . .Part No. 2585 560
	Consists of:
	2 - 2465 163 Gasket, Air Cleaner to Carburetor
	2 - 2465 063 Gasket, Carburetor Flange
	2 - 2468 452 Gasket, Carburetor Mounting Flange
	1 - 2264 794 Gasket, Chain Case Cover
	2 - 2658 320 Gasket, Cylinder Head
	2 - 2468 022 Gasket, Cylinder Head Cover
	1 - 50 082 Gasket, Cylinder Water Outlet Elbow
	2 - 2468 053 Gasket, Exhaust Manifold
	2 - 2461 549 Gasket, Exhaust Pipe Flange, Right
	1 - 2530 120 Gasket, Exhaust Pipe Flange, Left
	1 - 1400 185 Gasket, Fuel Pump Flange
	1 - 1326 836 Gasket, Ignition Distributor
	2 - ---- --- Gasket, Intake Manifold
	2 - ---- --- Gasket, Intake Manifold, Front and Rear
	1 - 1737 770 Gasket, Oil Pan
	1 - 618 622 Gasket, Oil Pressure Relief Valve Cap
	1 - 1737 705 Gasket, Water Pump Body
	2 - 1737 761 Gasket, Water Pump Housing to Cylinder Head
	1 - ---- --- Gasket, Oil Pump Body
	1 - 1737 771 Seal, Chain Case Cover Oil
	2 - 1821 391 Seal, Crankshaft Bearing Oil
	2 - 2129 235 Seal, Crankshaft Bearing Retainer
	8 - ---- --- Seal, Intake Valve Stem Oil
	1 - ---- --- Seal, Oil Pump Cover, Small
	1 - 2268 921 Seal, Oil Pump Cover, Large
	1 - 1855 328 Seal, Oil Pump Body
	1 - ---- --- Sleeve
	1 - ---- --- Tool
9-10-2	OIL SEAL PACKAGE, CRANKSHAFT BEARING No. 5 CAP . . . . . Part No. 1326 091
	Consists of:
	1 - ---- --- Oil Seal, Left
	1 - ---- --- Oil Seal, Right
9-11-1	OIL SEAL PACKAGE, CRANKSHAFT REAR BEARING . . . . . Part No. 1326 093
	Consists of:
	2 - ---- --- Oil Seal, Bearing
	1 - ---- --- Oil Seal, Bearing Cap, Right
	1 - ---- --- Oil Seal, Bearing Cap, Left
	OIL SEAL PACKAGE, CRANKSHAFT REAR BEARING . . . . . Part No. 2084 411
	Consists of:
	1 - ---- --- Gasket, Cap, Right
	1 - ---- --- Gasket, Cap, Left
	2 - ---- --- Oil Seal

MyMopar.com

CODE	PART NAME AND PART NUMBER
9-11-1	Cont'd.
	OIL SEAL PACKAGE, CRANKSHAFT REAR BEARING . . . . . Part No. 2275 365
	Consists of:
	2 - ---- --- Oil Seal, Rear Bearing
	2 - ---- --- Oil Seal, Rear Bearing Retainer
9-39-1	GASKET PACKAGE, VALVE GRIND . . . . . Part No. 2585 209
	Consists of:
	2 - 1851 579 Gasket, Cylinder Head
	2 - 2463 168 Gasket, Cylinder Head Cover
	2 - 2406 031 Gasket, Cylinder Head Cover
	2 - 1821 640 Gasket, Exhaust Pipe Flange
	2 - 2465 391 Gasket, Exhaust Pipe Flange
	1 - 1851 664 Gasket, Intake Manifold
	2 - 1737 761 Gasket, Water Pump to Cylinder Block
	16 - 2121 686 Shield, Valve Stem Oil
	GASKET PACKAGE, VALVE GRIND . . . . . Part No. 2585 207
	Consists of:
	2 - 1851 579 Gasket, Cylinder Head
	2 - 2463 168 Gasket, Cylinder Head Cover
	2 - 2406 031 Gasket, Cylinder Head Cover
	2 - 1821 640 Gasket, Exhaust Pipe Flange
	2 - 2465 391 Gasket, Exhaust Pipe Flange
	1 - 1737 709 Gasket, Intake Manifold
	2 - 1737 761 Gasket, Water Pump to Cylinder Block
	16 - 2121 686 Shield, Valve Stem Oil
	GASKET PACKAGE, VALVE GRIND . . . . . Part No. 2585 205
	Consists of:
	2 - 2463 338 Gasket, Cylinder Head
	2 - 2463 290 Gasket, Cylinder Head Cover
	2 - 2465 842 Gasket, Exhaust Manifold
	1 - 2465 845 Gasket, Exhaust Manifold, Left, w/Heat Shield
	2 - ---- --- Gasket, Intake Manifold
	1 - ---- --- Gasket, Intake Manifold, Front
	1 - ---- --- Gasket, Intake Manifold, Rear
	16 - 2205 958 Shield, Valve Stem Oil
	GASKET PACKAGE, VALVE GRIND . . . . . Part No. 2585 201
	Consists of:
	1 - 1947 578 Gasket, Cylinder Head
	1 - 2121 244 Gasket, Cylinder Head Cover
	1 - 2406 625 Gasket, Cylinder Head Cover
	1 - 1947 671 Gasket Cylinder Water Outlet Elbow
	1 - 2465 391 Gasket, Exhaust Pipe Flange
	1 - 1947 762 Gasket, Intake and Exhaust Manifold
	1 - 2268 264 Gasket, Intake to Exhaust Manifold
	6 - 2205 959 Shield, Exhaust Valve Stem Oil
	6 - 2205 958 Shield, Intake Valve Stem Oil

CODE	PART NAME AND PART NUMBER
9-39-1	Cont'd
	GASKET PACKAGE, VALVE GRIND . . . . . Part No. 2585 203
	Consists of:
	2 - 2525 062 Gasket, Cylinder Head
	2 - 2128 407 Gasket, Cylinder Head Cover
	2 - 1670 508 Gasket, Exhaust Manifold
	2 - 1636 570 Gasket, Exhaust Pipe Flange
	2 - ---- --- Gasket, Intake Manifold
	1 - ---- --- Gasket, Intake Manifold, Front
	1 - ---- --- Gasket, Intake Manifold, Rear
	8 - 2205 959 Shield, Exhaust Valve Stem Oil
	8 - 2205 958 Shield, Intake Valve Stem Oil
	GASKET PACKAGE, VALVE GRIND . . . . . Part No. 2585 561
	Consists of:
	2 - 2465 163 Gasket, Air Cleaner to Carburetor
	2 - 2465 063 Gasket, Carburetor Flange
	2 - 2468 452 Gasket Carburetor Mounting Flange
	2 - 2658 320 Gasket, Cylinder Head
	2 - 2468 022 Gasket, Cylinder Head Cover
	2 - 2468 053 Gasket, Exhaust Manifold
	2 - 2461 549 Gasket, Exhaust Pipe Flange, Right
	1 - 2530 120 Gasket, Exhaust Pipe Flange, Left
	2 - ---- --- Gasket, Intake Manifold
	2 - ---- --- Gasket, Intake Manifold Front and Rear
	2 - 1737 761 Gasket, Water Pump Housing to Cylinder Block
	8 - ---- --- Seal, Intake Valve Stem Oil
	1 - ---- --- Sleeve
	1 - ---- --- Tool
9-41-1	SILENCER PACKAGE, TAPPET CHAMBER . . Part No. 1879 747
	Consists of:
	1 - ---- --- Silencer, Front
	1 - ---- --- Silencer, Rear
9-50-1	GASKET SET, MANIFOLD . . . . . Part No. 2084 416
	Consists of:
	1 - ---- --- Gasket, Intake and Exhaust Manifold
	1 - ---- --- Gasket, Intake to Exhaust Manifold
	GASKET SET, MANIFOLD . . . . . Part No. 2525 090
	Consists of:
	2 - ---- --- Gasket, Intake Manifold
	1 - ---- --- Gasket, Intake Manifold, Front
	1 - ---- --- Gasket, Intake Manifold, Rear

MyMopar.com

CODE	PART NAME AND PART NUMBER
9-50-1	Cont'd GASKET SET, INTAKE MANIFOLD . . . . . Part No. 2495 081 Consists of: 2 - ---- --- Gasket, Intake Manifold 1 - ---- --- Gasket, Intake Manifold, Front 1 - ---- --- Gasket, Intake Manifold, Rear
	GASKET SET, INTAKE MANIFOLD . . . . . Part No. 2525 470 Consists of: 2 - 2465 063 Gasket, Carburetor Flange 2 - 2468 452 Gasket, Carburetor Mounting Flange 2 - 2468 046 Gasket, Intake Manifold 2 - 2536 015 Gasket, Intake Manifold Front and Rear
9-58-1	HEAT CONTROL PACKAGE, MANIFOLD . . . . . Part No. 2525 034 Consists of: 1 - 862 830 Bolt, Counterweight 2 - ---- --- Bushing 1 - 2465 810 Counterweight, Thermostat 1 - 1409 594 Lock, Counterweight 1 - 120 614 Nut, Counterweight 1 - ---- --- Plate 2 - 148 148 Retainer, Shaft 1 - ---- --- Shaft 1 - ---- --- Spring, Valve 1 - 683 057 Stop 1 - 960 003 Thermostat
	HEAT CONTROL PACKAGE, MANIFOLD. Part No. 2279 887 Consists of: 1 - 862 830 Bolt, Shield Clamp 2 - ---- --- Bushing 2 - ---- --- Bushing 1 - 1409 594 Lock, Shield 1 - 120 614 Nut, Shield Clamp Bolt 1 - ---- --- Plate 2 - 148 148 Retainer, Shaft 1 - ---- --- Shaft 1 - 1944 616 Shield, Thermostat 1 - 1558 897 Spring, Valve 1 - 683 057 Stop 1 - ---- --- Thermostat
	HEAT CONTROL PACKAGE, MANIFOLD . . . . . Part No. 2525 443 Consists of: 1 - 862 830 Bolt, Counterweight 2 - ---- --- Bushing 1 - 2465 883 Counterweight Thermostat 1 - 120 614 Nut, Counterweight Bolt 1 - ---- --- Plate 2 - 148 148 Retainer, Shaft 1 - ---- --- Shaft 1 - 2532 087 Spring, Valve 1 - 683 057 Stop, Valve 1 - 2465 884 Thermostat

CODE	PART NAME AND PART NUMBER
9-58-1	Cont'd HEAT CONTROL PACKAGE, MANIFOLD . . . . . Part No. 2525 081 Consists of: 1 - 862 830 Bolt, Shield Clamp 2 - ---- --- Bushing (opt. 1827 275) 2 - ---- --- Bushing (opt. 1612 899) 1 - 2465 810 Counterweight, Thermostat 1 - 120 614 Nut, Shield Clamp Bolt 1 - ---- --- Plate 2 - 148 148 Retainer, Shaft 1 - ---- --- Shaft 1 - 1558 897 Spring, Valve 1 - 683 057 Stop 1 - 960 003 Thermostat 1 - 1409 594 Lock
	HEAT CONTROL PACKAGE, MANIFOLD . . . . . Part No. 2525 442 Consists of: 1 - 862 830 Bolt, Valve Counterweight 2 - ---- --- Bushing (opt. 1612 899) 2 - ---- --- Bushing (opt. 1827 275) 1 - 2468 307 Counterweight 1 - 120 614 Nut, Valve Counterweight 1 - 1409 594 Lock, Counterweight 1 - ---- --- Plate 1 - ---- --- Shaft 1 - 1558 897 Spring, Valve 1 - 2465 203 Stop, Valve 2 - 148 148 Retainer, Shaft 1 - 2121 554 Thermostat
10-02-62	CRANKCASE VENT VALVE PACKAGE . . . . . Part No. 2421 288 Consists of: 1 - 107 825 Nut, Vent Valve 1 - ---- --- Valve, Vent
	CRANKCASE VENT VALVE PACKAGE . . . . . Part No. 2421 289 Consists of: 1 - 107 825 Nut, Vent Valve 1 - ---- --- Valve, Vent
10-07-2	GASKET and SEAL PACKAGE, OIL PUMP Part No. 2084 355 Consists of: 3 - ---- --- Gasket 1 - ---- --- Seal
10-07-3	SHAFT and ROTOR PACKAGE, OIL PUMP DRIVE . . . . . Part No. 2084 415 Consists of: 1 - ---- --- Rotor, Outer 1 - ---- --- Shaft, Drive
	SHAFT and ROTOR PACKAGE OIL PUMP DRIVE . . . . . Part No. 2084 354 Consists of: 1 - ---- --- Rotor, Outer 1 - ---- --- Shaft, Drive

★ Indicates use as required.
⊟ Indicates parts not listed in any previous parts book.
March 1966 Supersedes May 1965.

Printed in U.S.A.
Prices and specifications subject to change without notice.
* Indicates change or addition.
MyMopar.com

CODE	PART NAME AND PART NUMBER
10-24-1	GASKET PACKAGE, OIL PAN . . . . . Part No. 2240 647 Consists of: 1 - ---- --- Gasket, Oil Pan, Right 1 - ---- --- Gasket, Oil Pan, Left 1 - ---- --- Gasket, Oil Pan, Front 1 - ---- --- Gasket, Oil Pan, Rear
	GASKET PACKAGE, OIL PAN . . . . . Part No. 1879 520 Consists of: 1 - ---- --- Gasket, Oil Pan, Side 2 - ---- --- Gasket, Oil Pan, End
10-26-8	CARTRIDGE, OIL FILTER Part No. 2129 023 Consists of: 1 - ---- --- Cartridge 5 - ---- --- Gasket
	CARTRIDGE, OIL FILTER . . . . . Part No. *2532 752 Consists of: 1 - ---- --- Cartridge 1 - 2532 753 Gasket, Filter Body 1 - 2532 754 Gasket, Filter Cover
13-72-4	BAR and BASE PACKAGE, BUMPER JACK . . . . Part No. 2275 450 Consists of: 1 - ---- --- Bar 1 - ---- --- Base
14-29-2	CLEANER PACKAGE, CARBURETOR AIR . . Part No. *2465 156 Consists of: 1 - ---- --- Cover, Air Cleaner 1 - 1946 923 Filter 1 - 2465 159 Plate, Element Support
14-30-4	REPAIR PACKAGE, CARBURETOR . . . . . Part No. 2525 781 Consists of: 1 - ---- --- Gasket, Flange 1 - ---- --- Gasket, Economiser Body 1 - ---- --- Gasket, Float Bowl 1 - ---- --- Valve, Mechanical Vent 1 - ---- --- Needle and Seat 1 - ---- --- Pump
	REPAIR PACKAGE, CARBURETOR . . . . . Part No. 2448 977 Consists of: 1 - ---- --- Gasket, Flange 1 - ---- --- Gasket, Step-Up Piston 1 - ---- --- Gasket, Body 1 - ---- --- Gasket, Body Flange 1 - ---- --- Plug, High Speed Passage Rivet 1 - ---- --- Needle and Seat 1 - ---- --- Spring, Step-Up Piston 1 - ---- --- Plunger, Pump 1 - ---- --- Jet, Main Metering 1 - ---- --- Tube and Plug, Idle Orfice 1 - ---- --- Tube, Main Vent
14-30-4 Cont'd	REPAIR PACKAGE, CARBURETOR . . . . . Part No. 2299 186 Consists of: 1 - ---- --- Gasket, Air Horn 1 - ---- --- Gasket, Flange 1 - ---- --- Gasket, Pump Jet Housing 2 - ---- --- Gasket, Primary Vent Cluster 2 - ---- --- Gasket, Secondary Vent Cluster 2 - ---- --- Jet, Metering Rod 2 - ---- --- Needle, w/Seat, Float 1 - ---- --- Plunger, w/Rod, Pump 2 - ---- --- Rod, Step-Up 2 - ---- --- Spring, Vacuum Piston
	REPAIR PACKAGE, CARBURETOR . . . . . Part No. 2585 426 Consists of: 1 - ---- --- Gasket, Flange 1 - ---- --- Gasket, Step-Up Piston 1 - ---- --- Gasket, Body 1 - ---- --- Gasket, Body Flange 1 - ---- --- Plug, High Speed Passage Rivet 1 - ---- --- Needle and Seat 1 - ---- --- Spring, Step-Up Piston 1 - ---- --- Plunger, Pump 1 - ---- --- Jet, Main Metering 1 - ---- --- Tube and Plug, Idle Orfice 1 - ---- --- Tube, Main Vent
	REPAIR PACKAGE, CARBURETOR . . . . . Part No. 2585 425 Consists of: 1 - ---- --- Gasket, Flange 1 - ---- --- Gasket, Body 1 - ---- --- Gasket, Body Flange 1 - ---- --- Gasket, Step-Up Piston 1 - ---- --- Plug, High Speed Passage Rivet 1 - ---- --- Needle and Seat 1 - ---- --- Spring, Step-Up Piston 1 - ---- --- Plunger, Pump 1 - ---- --- Jet, Main Metering 1 - ---- --- Tube and Plug, Idle Orfice 1 - ---- --- Tube, Main Vent
	REPAIR PACKAGE, CARBURETOR . . . . . Part No. 2585 427 Consists of: 1 - ---- --- Gasket, Flange 1 - ---- --- Gasket, Step-Up Piston 1 - ---- --- Gasket, Body 1 - ---- --- Gasket, Body Flange 1 - ---- --- Plug, High Speed Passage Rivet 1 - ---- --- Needle and Seat 1 - ---- --- Spring, Step-Up Piston 1 - ---- --- Plunger Pump 1 - ---- --- Jet, Main Metering 1 - ---- --- Tube and Plug, Idle Orfice 1 - ---- --- Tube, Main Vent

★ Indicates use as required.
⊟ Indicates parts not listed in any previous parts book.
• Indicates change or addition.

Printed in U.S.A.
Prices and specifications subject to change without notice.
March 1966 Supersedes May 1965.

MyMopar.com

CODE	PART NAME AND PART NUMBER
14-30-4	Cont'd
	REPAIR PACKAGE, CARBURETOR . . . . . Part No. 2585 44:
	Consists of:
	1 - ---- --- Gasket, Flange
	1 - ---- --- Gasket, Air Horn
	2 - ---- --- Gasket, Metering Jet Plug
	1 - ---- --- Gasket, Power By Pass Jet
	1 - ---- --- Gasket, Pump Discharge Nozzle
	1 - ---- --- Gasket, Main Body
	1 - ---- --- Needle and Seat
	1 - ---- --- Jet, Power By-Pass
	1 - ---- --- Jet, Main Metering
	1 - ---- --- Spring, Pump
	1 - ---- --- Pump
	REPAIR PACKAGE, CARBURETOR . . . . . Part No. 2585 447
	Consists of:
	1 - ---- --- Gasket, Flange
	1 - ---- --- Gasket, Air Horn
	2 - ---- --- Gasket, Metering Jet Plug
	1 - ---- --- Gasket, Power By-Pass Jet
	1 - ---- --- Gasket, Main Body
	1 - ---- --- Gasket, Pump Discharge Nozzle
	1 - ---- --- Pump
	1 - ---- --- Needle and Seat
	1 - ---- --- Jet, Power By-Pass
	1 - ---- --- Jet, Main Metering
	1 - ---- --- Spring, Pump
	REPAIR PACKAGE, CARBURETOR . . . . . Part No. 2585 407
	Consists of:
	1 - ---- --- Gasket, Flange
	1 - ---- --- Gasket, Step-Up Piston
	1 - ---- --- Gasket, Body
	1 - ---- --- Gasket, Venturi Housing
	1 - ---- --- Gasket, Venturi Cover
	1 - ---- --- Gasket, Body Flange
	1 - ---- --- Needle and Seat
	1 - ---- --- Spring, Step-Up Piston
	1 - ---- --- Plunger, Pump
	2 - ---- --- Jet, Main Metering
	REPAIR PACKAGE, CARBURETOR . . . . . Part No. 2585 411
	Consists of:
	1 - ---- --- Gasket, Flange
	1 - ---- --- Gasket, Body
	1 - ---- --- Gasket, Body Flange
	1 - ---- --- Gasket, Venturi Housing
	1 - ---- --- Gasket, Venturi Cover
	1 - ---- --- Gasket, Step-Up Piston
	1 - ---- --- Needle and Seat
	1 - ---- --- Plunger, Pump
	2 - ---- --- Jet, Main Metering
	1 - ---- --- Spring, Step-Up Piston
	REPAIR PACKAGE, CARBURETOR . . . . Part No. 2585 401
	Consists of:
	1 - ---- --- Gasket, Flange
	1 - ---- --- Gasket, Pump Jet Housing
	(Pkg. Cont'd)

CODE	PART NAME AND PART NUMBER
14-30-4	Cont'd
	1 - ---- --- Gasket, Air Horn
	2 - ---- --- Gasket, Secondary Venturi Cluster
	2 - ---- --- Gasket, Primary Venturi
	2 - ---- --- Rod, Step-Up
	2 - ---- --- Needle and Seat
	2 - ---- --- Spring, Vacuum Piston
	1 - ---- --- Plunger, Pump
	2 - ---- --- Jet, Metering Rod, Primary
	REPAIR PACKAGE, CARBURETOR . . . . . Part No. 2585 430
	Consists of:
	1 - ---- --- Gasket, Flange
	1 - ---- --- Gasket, Air Horn
	1 - ---- --- Gasket, Power By-Pass Jet
	1 - ---- --- Gasket, Main Body
	1 - ---- --- Gasket, Venturi Cluster
	1 - ---- --- Needle and Seat
	1 - ---- --- Jet, Power By-Pass
	2 - ---- --- Jet, Main Metering
	1 - ---- --- Pump
	REPAIR PACKAGE, CARBURETOR . . . . Part No. 2585 440
	Consists of:
	1 - ---- --- Gasket, Flange
	1 - ---- --- Gasket, Air Horn
	1 - ---- --- Gasket, Power By-Pass Jet
	1 - ---- --- Gasket, Main Body
	1 - ---- --- Gasket, Venturi Cluster
	1 - ---- --- Needle and Seat
	1 - ---- --- Jet, Power By-Pass
	2 - ---- --- Jet, Main Metering
	1 - ---- --- Pump
14-30-4	REPAIR PACKAGE, CARBURETOR . . . . . Part No. *2585 462
	Consists of:
	1 - ---- --- Gasket, Economizer Body
	1 - ---- --- Gasket, Flange
	1 - ---- --- Gasket, Float Bowl
	1 - ---- --- Needle, w/Seat, Float
	1 - ---- --- Pump
	REPAIR PACKAGE, CARBURETOR . . . . . Part No. *2585 498
	Consists of:
	1 - ---- --- Gasket, Air Horn
	1 - ---- --- Gasket, Flange
	1 - ---- --- Gasket, Main Body
	2 - ---- --- Gasket, Metering Jet Plug
	1 - ---- --- Gasket, Power By-Pass Jet
	1 - ---- --- Gasket, Pump Discharge Nozzle
	2 - ---- --- Jet, Main Metering
	1 - ---- --- Jet, Power By-Pass
	1 - ---- --- Needle, w/Seat, Float
	1 - ---- --- Spring, Pump

MyMopar.com

CODE	PART NAME AND PART NUMBER

14-30-4 Cont'd.

REPAIR PACKAGE,
CARBURETOR MAJOR . Part No. *2808 076
Consists of:
1 - ---- --- Gasket, Economizer Body
1 - ---- --- Gasket, Flange
1 - ---- --- Gasket, Float Bowl
1 - ---- --- Jet, Main
1 - ---- --- Lever, Pump Operating
1 - ---- --- Link, Pump Operating
1 - ---- --- Needle, w/Seat, Float
1 - ---- --- Needle, Idle Adjusting
1 - ---- --- Pump
2 - ---- --- Retainer, Choke Link
1 - ---- --- Retainer, Float
1 - ---- --- Retainer, Pump Link
1 - ---- --- Retainer, Pump Lever
1 - ---- --- Stem, Economizer
2 - ---- --- Screw, Choke Plate
2 - ---- --- Screw, Throttle Plate
1 - ---- --- Valve, Mechanical Vent

REPAIR PACKAGE,
CARBURETOR MAJOR . Part No. *2808 077
Consists of:
1 - ---- --- Gasket, Economizer Body
1 - ---- --- Gasket, Flange
1 - ---- --- Gasket, Float Bowl
1 - ---- --- Jet, Main
1 - ---- --- Lever, Pump Operating
1 - ---- --- Link, Pump Operating
1 - ---- --- Needle, w/Seat, Float
1 - ---- --- Pump
2 - ---- --- Retainer, Choke Link
1 - ---- --- Retainer, Float
1 - ---- --- Retainer, Pump Link
1 - ---- --- Retainer, Pump Lever
1 - ---- --- Stem, Economizer
2 - ---- --- Screw, Choke Plate
2 - ---- --- Screw, Throttle Plate
1 - ---- --- Valve, Mechanical

REPAIR PACKAGE,
CARBURETOR MAJOR . Part No. *2808 078
Consists of:
1 - ---- --- Gasket, Economizer Body
1 - ---- --- Gasket, Flange
1 - ---- --- Gasket, Float Bowl
1 - ---- --- Jet, Main
1 - ---- --- Lever, Pump Operating
1 - ---- --- Link, Pump Operating
1 - ---- --- Needle, w/Seat, Float
1 - ---- --- Pump
2 - ---- --- Retainer, Choke Link
1 - ---- --- Retainer, Float
1 - ---- --- Retainer, Pump Link
1 - ---- --- Retainer, Pump Lever
1 - ---- --- Stem, Economizer
2 - ---- --- Screw, Choke Plate
2 - ---- --- Screw, Throttle Plate
1 - ---- --- Valve, Mechanical Vent

14-30-4 Cont'd.

REPAIR PACKAGE,
CARBURETOR . . . . . Part No. *2808 017
Consists of:
1 - ---- --- Gasket, Body
1 - ---- --- Gasket, Body Flange
1 - ---- --- Gasket, Flange
1 - ---- --- Gasket, Step-Up Piston
2 - ---- --- Gasket, Venturi Cover
1 - ---- --- Gasket, Venturi Housing
2 - ---- --- Jet, Main Metering
1 - ---- --- Needle, w/Seat, Float
1 - ---- --- Plunger, w/Rod, Pump
1 - ---- --- Spring, Step-Up Piston

REPAIR PACKAGE,
CARBURETOR . . . . Part No. *2585 494
Consists of:
1 - ---- --- Gasket, Air Horn
1 - ---- --- Gasket, Body
1 - ---- --- Gasket, Flange
2 - ---- --- Gasket, Metering Jet Plug
1 - ---- --- Gasket, Power By-Pass Jet
2 - ---- --- Jet, Main Metering
1 - ---- --- Needle, w/Seat, Float
1 - ---- --- Pump
1 - ---- --- Spring, Pump

REPAIR PACKAGE,
CARBURETOR. . . . . Part No. *2808 019
Consists of:
1 - ---- --- Gasket, Body
1 - ---- --- Gasket, Body Flange
1 - ---- --- Gasket, Flange
1 - ---- --- Gasket, Step-Up Piston
2 - ---- --- Gasket, Venturi Cover
1 - ---- --- Gasket, Venturi Housing
2 - ---- --- Jet, Main Metering
1 - ---- --- Needle, W/Seat, Float
1 - ---- --- Plunger, w/Rod, Pump
1 - ---- --- Spring, Step-Up Piston

REPAIR PACKAGE,
CARBURETOR . . . . . Part No. *2808 011
Consists of:
1 - ---- --- Gasket, Air Horn
1 - ---- --- Gasket, Flange
1 - ---- --- Gasket, Main Body
1 - ---- --- Gasket, Power By-Pass Jet
1 - ---- --- Gasket, Venturi Cluster
2 - ---- --- Jet, Main Metering
1 - ---- --- Jet, Power By-Pass
1 - ---- --- Needle, w/Seat, Float
1 - ---- --- Pump

ZIP KIT, CARBURETOR Part No. 2525 771
Consists of:
1 - ---- --- Gasket, Flange
1 - ---- --- Gasket, Step-Up Piston
1 - ---- --- Gasket, Body
1 - ---- --- Gasket, Venturi Housing
1 - ---- --- Gasket, Venturi Cover
1 - ---- --- Gasket, Body Flange
1 - ---- --- Plunger, Pump
1 - ---- --- Gauge, Float
1 - ---- --- Needle and Seat

★ Indicates use as required.
⊟ Indicates parts not listed in any previous parts book.
* Indicates change or addition.

Printed in U.S.A.
Prices and specifications subject to change without notice.
March 1966 Supersedes May 1965.

MyMopar.com

CODE	PART NAME AND PART NUMBER
14-30-4	Cont'd.

ZIP KIT, CARBURETOR Part No. 2525 774
Consists of:
1 - ---- --- Gasket, Flange
1 - ---- --- Gasket, Flange
1 - ---- --- Gasket, Flange
1 - ---- --- Gasket, Pump Jet Housing
1 - ---- --- Gasket, Air Horn
2 - ---- --- Gasket, Secondary Venturi Cluster
2 - ---- --- Gasket, Primary Venturi Cluster
2 - ---- --- Needle and Seat
1 - ---- --- Plunger, Pump
1 - ---- --- Gauge, Float
1 - ---- --- Gauge, Float

ZIP KIT, CARBURETOR Part No. 2495 987
Consists of:
1 - ---- --- Gasket, Flange
1 - ---- --- Gasket, Step-Up Piston
1 - ---- --- Gasket, Step-Up Jet
1 - ---- --- Gasket, Body
1 - ---- --- Gasket, Body
1 - ---- --- Gasket, Body Flange
1 - ---- --- Gasket, Body Flange
1 - ---- --- Needle and Seat
1 - ---- --- Plunger, Pump
1 - ---- --- Gauge, Float

ZIP KIT, CARBURETOR Part No. 2299 197
Consists of:
1 - ---- --- Gasket, Body
1 - ---- --- Gasket, Body Flange
1 - ---- --- Gasket, Flange
1 - ---- --- Gasket, Step-Up Piston
1 - ---- --- Gasket, Venturi Cover
1 - ---- --- Gasket, Venturi Housing
1 - ---- --- Needle, w/Seat, Float
1 - ---- --- Plunger, w/Rod, Pump

ZIP KIT, CARBURETOR Part No. *2808 021
Consists of:
1 - ---- --- Gasket, Body
1 - ---- --- Gasket, Body Flange
1 - ---- --- Gasket, Flange
1 - ---- --- Gasket, Step-Up Piston
2 - ---- --- Gasket, Venturi Cover
1 - ---- --- Gasket, Venturi Housing
1 - ---- --- Needle, W/Seat, Float
1 - ---- --- Plunger, w/Rod, Pump

ZIP KIT, CARBURETOR Part No. *2808 067
Consists of:
2 - ---- --- Gasket, Air Horn
1 - ---- --- Gasket, Flange
1 - ---- --- Gasket, Main Body
1 - ---- --- Gasket, Power By-Pass Jet
1 - ---- --- Gasket, Venturi Cluster
1 - ---- --- Needle, w/Seat, Float
1 - ---- --- Pump

CODE	PART NAME AND PART NUMBER
14-30-7	GASKET PACKAGE, CARBURETOR . . . . . Part No. 2299 037

Consists of:
1 - ---- --- Gasket, Economiser Body
1 - ---- --- Gasket, Flange
1 - ---- --- Gasket, Float Needle and Seat
1 - ---- --- Valve, Mechanical Vent

GASKET PACKAGE, CARBURETOR . . . . . Part No. 2448 978
Consists of:
1 - ---- --- Gasket, Body
1 - ---- --- Gasket, Body Flange
1 - ---- --- Gasket, Needle and Seat
1 - ---- --- Gasket, Step-Up Jet
1 - ---- --- Gasket, Step-Up Jet
1 - ---- --- Gasket, Step-Up Piston
1 - ---- --- Gasket, Flange

GASKET PACKAGE, CARBURETOR . . . . . Part No. 2448 981
Consists of:
1 - ---- --- Gasket, Body
1 - ---- --- Gasket, Body Flange
1 - ---- --- Gasket, Flange
1 - ---- --- Gasket, Needle and Seat
1 - ---- --- Gasket, Step-Up Jet
1 - ---- --- Gasket, Step-Up Piston

GASKET PACKAGE, CARBURETOR . . . . . Part No. 2448 986
Consists of:
1 - ---- --- Gasket, Body
1 - ---- --- Gasket, Body Flange
1 - ---- --- Gasket, Flange
1 - ---- --- Gasket, Needle and Seat
1 - ---- --- Gasket, Step-Up Jet
1 - ---- --- Gasket, Step-Up, Piston

GASKET PACKAGE, CARBURETOR . . . . . Part No. 2299 196
Consists of:
1 - ---- --- Gasket, Body
1 - ---- --- Gasket, Body Flange
1 - ---- --- Gasket, Flange
1 - ---- --- Gasket, Step-Up Piston
1 - ---- --- Gasket, Venturi Housing
1 - ---- --- Gasket, Venturi Cover

GASKET PACKAGE, CARUBRETOR . . . . . Part No. 2299 259
Consists of:
1 - ---- --- Gasket, Air Horn
1 - ---- --- Gasket, Flange
1 - ---- --- Gasket, Float Needle and Seat
1 - ---- --- Gasket, Main Body
1 - ---- --- Gasket, Power By-Pass Jet
1 - ---- --- Gasket, Venturi Cluster

GASKET PACKAGE, CARBURETOR . . . . . Part No. 2495 951
Consists of:
1 - ---- --- Gasket, Air Horn
1 - ---- --- Gasket, Flange

(Pkg. Cont'd)

★ Indicates use as required.
B Indicates parts not listed in any previous parts book.
March 1966 Supersedes May 1965.

Printed in U.S.A.
Prices and specifications subject to change without notice.
* Indicates change or addition.
MyMopar.com

CODE	PART NAME AND PART NUMBER
14-30-7	Cont'd.
	1 - ---- --- Gasket, Pump Jet Housing
	2 - ---- --- Gasket, Primary Vent Cluster
	2 - ---- --- Gasket, Secondary Vent Cluster
	GASKET PACKAGE, CARBURETOR. . . . . Part No. *2585 463
	Consists of:
	1 - ---- --- Gasket, Economizer Body
	1 - ---- --- Gasket, Flange
	1 - ---- --- Gasket, Float Bowl
	1 - ---- --- Gasket, Fuel Inlet Seal
	1 - ---- --- Valve, Mechanical Vent
	GASKET PACKAGE, CARBURETOR . . . . . Part No. *2585 495
	Consists of:
	1 - ---- --- Gasket, Air Horn
	1 - ---- --- Gasket, Flange
	1 - ---- --- Gasket, Main Body
	2 - ---- --- Gasket, Metering Jet Plug
	1 - ---- --- Gasket, Needle, w/Seat
	1 - ---- --- Gasket, Power By-Pass Jet
	1 - ---- --- Gasket, Pump Discharge Nozzle
	GASKET PACKAGE, CARBURETOR . . . . . Part No. *2808 023
	Consists of:
	1 - ---- --- Gasket, Body
	1 - ---- --- Gasket, Body Flange
	1 - ---- --- Gasket, Flange
	1 - ---- --- Gasket, Step-Up Piston
	2 - ---- --- Gasket, Venturi Cover
	1 - ---- --- Gasket, Venturi Housing
	GASKET PACKAGE, CARBURETOR. . . . . Part No. *2808 020
	Consists of:
	1 - ---- --- Gasket, Body
	1 - ---- --- Gasket, Body Flange
	1 - ---- --- Gasket, Flange
	1 - ---- --- Gasket, Step-Up Piston
	2 - ---- --- Gasket, Venturi Cover
	1 - ---- --- Gasket, Venturi Housing
	GASKET PACKAGE, CARBURETOR . . . . . Part No. *2808 068
	Consists of:
	2 - ---- --- Gasket, Air Horn
	1 - ---- --- Gasket, Flange
	1 - ---- --- Gasket, Main Body
	1 - ---- --- Gasket, Needle, w/Seat
	1 - ---- --- Gasket, Power By-Pass Jet
	1 - ---- --- Gasket, Venturi Cluster
16-03-1	JOINT PACKAGE, UNIVERSAL, BALL and PIN TYPE . . . . . Part No. 2298 940
	Consists of:
	2 - 629 768 Button, Centering
	2 - 1739 927 Ball and Roller
	1 - 870 539 Clamp
	(Pkg. Cont'd)

CODE	PART NAME AND PART NUMBER
16-03-1	Cont'd
	1 - 870 540 Clamp
	1 - ---- --- Cover, Dust
	1 - ---- --- Cover, Grease
	1 - 1616 185 Gasket
	1 - 579 445 Pin, Centering
	2 - 605 004 Washer, Thrust
	JOINT PACKAGE, UNIVERSAL, BALL and PIN TYPE . . . . . Part No. 2298 941
	Consists of:
	2 - 1739 924 Button, Centering
	2 - 1739 927 Ball and Roller
	1 - 870 540 Clamp
	1 - ---- --- Clamp
	1 - 1635 092 Cover, Grease
	1 - ---- --- Cover, Dust
	1 - 2266 922 Cover, Grease
	1 - 1739 923 Pin, Centering
	2 - 605 004 Washer, Thrust
	1 - 1635 098 Gasket
	JOINT PACKAGE, CROSS and ROLLER TYPE . . . . . Part No. 1752 624
	Consists of:
	1 - ---- --- Cross
	4 - 858 006 Retainer
	4 - 1739 913 Roller and Bushing
	KIT, CROSS and NEEDLE BEARING . . . . . Part No. 2533 202
	Consists of:
	1 - ---- --- Journal, Sub
	4 - ---- --- Race, Sub
	4 - ---- --- Ring, Snap
	KIT, CONSTANT VELOCITY CENTERING REPLACEMENT . . . . Part No. 2533 203
	Consists of:
	1 - ---- --- Centering
	1 - ---- --- Seal, Ball
	34 - ---- --- Roller, Needle
	1 - ---- --- Seal
	2 - ---- --- Spring, Stud Centering
16-07-4	DUST COVER PACKAGE, UNIVERSAL JOINT . . . Part No. 1603 397
	Consists of:
	1 - 870 539 Clamp
	1 - 870 540 Clamp
	1 - ---- --- Cover
	DUST COVER PACKAGE, UNIVERSAL JOINT . . . Part No. 2275 514
	Consists of:
	1 - 870 540 Clamp
	1 - 1532 943 Clamp
	1 - ---- --- Cover

★ Indicates use as required.
⊟ Indicates parts not listed in any previous parts book.
* Indicates change or addition.

Printed in U.S.A.
Prices and specifications subject to change without notice.
March 1966 Supersedes May 1965.

MyMopar.com

CODE	PART NAME AND PART NUMBER
16-20-1	FLANGE PACKAGE, AXLE DRIVE . . . . . Part No. 2240 614 Consists of: 1 - ---- --- Flange 2 - 1828 824 Clamp 4 - 6022 878 Screw 4 - 120 380 Washer
16-20-8	FLANGE NUT PACKAGE, TRANS. END . . . . . Part No. 2298 967 Consists of: 1 - ---- --- Nut 1 - ---- --- Washer
17-16-1	SHACKLE and BUSHING PACKAGE, REAR SPRING . . . . . Part No. 2585 262 Consists of: 4 - 1400 269 Bushing 2 - 271 501 Nut 1 - ---- --- Shackle 1 - ---- --- Shackle w/Bolt
	SHACKLE and BUSHING PACKAGE, REAR SPRING . . . . . Part No. 2585 263 Consists of: 4 - 1400 269 Bushing 2 - 271 501 Nut 1 - ---- --- Shackle 1 - ---- --- Shackle w/Bolt
	SHACKLE and BUSHING PACKAGE, REAR SPRING . . . . . Part No. 2585 264 Consists of: 4 - 1940 725 Bushing 2 - 120 377 Nut 1 - ---- --- Plate 1 - ---- --- Shackle w/Bolt
	SHACKLE and BUSHING PACKAGE, REAR SPRING . . . . . Part No. 2585 265 Consists of: 4 - 1400 269 Bushing 1 - ---- --- Insert 2 - 271 501 Nut 1 - ---- --- Plate 1 - ---- --- Shackle w/Bolt
	SHACKLE and BUSHING PACKAGE, REAR SPRING . . . . . Part No. 2525 469 Consists of: 4 - 1400 269 Bushing 1 - ---- --- Insert 2 - 271 501 Nut 1 - ---- --- Shackle w/Bolt 1 - ---- --- Shackle, Outer
17-23-3	ABSORBER and BUSHING PACKAGE, FRONT SHOCK . . . . . Part No. 2275 883 Consists of: 1 - ---- --- Absorber 1 - 2206 923 Bushing 1 - ---- --- Insert 1 - ---- --- Sleeve
	ABSORBER and BUSHING PACKAGE, FRONT SHOCK . . . . . Part No. 2298 803 Consists of: 1 - ---- --- Absorber 1 - 2206 923 Bushing 1 - ---- --- Insert 1 - ---- --- Sleeve 2 - 2206 925 Washer
	ABSORBER and BUSHING PACKAGE, FRONT SHOCK . . . . . Part No. 2298 804 Consists of: 1 - ---- --- Absorber 1 - 2206 923 Bushing 1 - ---- --- Insert 1 - ---- --- Sleeve 2 - 2206 925 Washer
	ABSORBER and BUSHING PACKAGE, FRONT SHOCK . . . . . Part No. 2298 805 Consists of: 1 - ---- --- Absorber 1 - 2206 923 Bushing 1 - ---- --- Insert 1 - ---- --- Sleeve 2 - 2206 925 Washer
	ABSORBER and BUSHING PACKAGE, FRONT SHOCK . . . . . Part No. 2298 807 Consists of: 1 - ---- --- Absorber 1 - 2206 923 Bushing 1 - ---- --- Insert 1 - ---- --- Sleeve 2 - 2206 925 Washer
	ABSORBER and BUSHING PACKAGE, FRONT SHOCK . . . . . Part No. 2525 039 Consists of: 1 - ---- --- Absorber 1 - 2206 923 Bushing
	ABSORBER and BUSHING PACKAGE, FRONT SHOCK . . . . . Part No. 2525 459 Consists of: 1 - ---- --- Absorber 1 - 2206 923 Bushing

MyMopar.com

CODE	PART NAME AND PART NUMBER
17-23-3	Cont'd ABSORBER and BUSHING PACKAGE, FRONT SHOCK . . . . . Part No. 2525 460 *2585 623 Consists of: 1 - ---- --- Absorber 1 - 2206 923 Bushing
	ABSORBER and BUSHING PACKAGE, FRONT SHOCK . . . . . Part No. 2525 461 Consists of: 1 - ---- --- Absorber 1 - 2206 923 Bushing
	ABSORBER and BUSHING PACKAGE, REAR SHOCK . . . . . Part No. 2240 317 Consists of: 1 - ---- --- Absorber 2 - 1319 902 Bushing
	ABSORBER and BUSHING PACKAGE, REAR SHOCK . . . . . Part No. 2240 360 Consists of: 1 - ---- --- Absorber 2 - 1319 902 Bushing
	ABSORBER and BUSHING PACKAGE, REAR SHOCK . . . . . Part No. 2275 848 Consists of: 1 - ---- --- Absorber 1 - 1319 902 Bushing, Lower 1 - 2201 554 Bushing, Upper
	ABSORBER and BUSHING PACKAGE, REAR SHOCK . . . . . Part No. 2275 849 Consists of: 1 - ---- --- Absorber 1 - 1319 902 Bushing, Lower 1 - 2201 554 Bushing, Upper
	ABSORBER and BUSHING PACKAGE, REAR SHOCK . . . . . Part No. 2298 900 Consists of: 1 - ---- --- Absorber 2 - 1319 902 Bushing
	ABSORBER and BUSHING PACKAGE, REAR SHOCK . . . . . Part No. 2298 912 Consists of: 1 - ---- --- Absorber 2 - 1319 902 Bushing
	ABSORBER and BUSHING PACKAGE, REAR SHOCK . . . . . Part No. 2525 040 Consists of: 1 - ---- --- Absorber 1 - 1319 902 Bushing

CODE	PART NAME AND PART NUMBER
17-23-3	Cont'd ABSORBER and BUSHING PACKAGE, REAR SHOCK . . . . . Part No. 2525 430 Consists of: 1 - ---- --- Absorber 1 - 1319 902 Bushing
	ABSORBER and BUSHING PACKAGE, REAR SHOCK . . . . . Part No. 2525 431 Consists of: 1 - ---- --- Absorber 1 - 1319 902 Bushing
	ABSORBER and BUSHING PACKAGE, REAR SHOCK . . . . . Part No. 2525 432 Consists of: 1 - ---- --- Absorber 1 - 1319 902 Bushing
	ABSORBER and BUSHING PACKAGE, REAR SHOCK . . . . . Part No. 2525 444 *2585 617 *2585 618 *2585 688 *2585 699 Consists of: 1 - ---- --- Absorber 1 - 1319 902 Bushing
17-29-6	FRONT SUSPENSION SWAY ELIMINATOR SHAFT BRACKET PACKAGE . Part No. 2585 559 Consists of: 1 - ---- --- Bracket, Right 1 - ---- --- Bracket, Left
19-01-3	OVERHAUL PACKAGE, STEERING . . . . . Part No. 2525 481 Consists of: 2 - 2126 760 Bearing, Steering Gear Shaft 2 - 2072 060 Bearing, Steering Gear Worm Thrust 2 - 2127 097 Cup, Steering Gear Worm Thrust Bearing 1 - 2267 468 Gasket, Steering Gear Shaft Cover 1 - ---- --- Seal, Steering Gear Shaft Oil 1 - 2267 156 Seal, Steering Gear Worm Shaft 1 - ---- --- Shim, Steering Gear Shaft Adjusting Screw 1 - ---- --- Shim, Steering Gear Shaft Adjusting Screw 1 - ---- --- Shim, Steering Gear Shaft Adjusting Screw
	REPAIR PACKAGE, STEERING GEAR . . . . Part No. 2279 954 Consists of: 3 - 2126 890 Bearing, Shaft 2 - 2072 060 Bearing, Worm Thrust (Pkg. Cont'd)

★ Indicates use as required.
⊟ Indicates parts not listed in any previous parts book.
• Indicates change or addition.

MyMopar.com

Printed in U.S.A.
Prices and specifications subject to change without notice.
March 1966 Supersedes May 1965.

CODE	PART NAME AND PART NUMBER
19-01-3	Cont'd 2 - 2127 097 Cup, Worm Thrust Bearing 1 - 2127 108 Gasket, Shaft Cover 1 - 2266 738 Seal, Column Shaft 1 - 2127 154 Seal, Shaft Oil 1 - 2267 156 Seal, Worm Shaft 4 - ---- --- Washer, Shaft Adjusting Screw
	REPAIR PACKAGE, STEERING GEAR . . . . Part No. 2279 955 Consists of: 2 - 2072 060 Bearing, Worm Thrust 2 - 2267 128 Bushing, Shaft 2 - 2127 097 Cup, Worm Thrust Bearing 1 - 2127 108 Gasket, Shaft Cover 1 - 2266 738 Seal, Column Shaft 1 - 2127 154 Seal, Shaft Oil 1 - 2267 156 Seal, Worm Shaft 4 - ---- --- Washer, Shaft Adjusting Screw
19-01-4	"O" RING and SEAL PACKAGE, POWER STEERING GEAR . . . . Part No. 2448 309 Consists of: 1 - 1733 724 Gasket, Valve Housing Plug 1 - 1733 602 "O" Ring, Column Support 2 - 1733 562 "O" Ring, Cylinder Head 1 - 1486 205 "O" Ring, Cylinder Head Ferrule 1 - 1823 150 "O" Ring, Housing 2 - 1556 385 "O" Ring, Housing Port 1 - 1536 268 "O" Ring, Pressure Control Valve 1 - 1822 149 "O" Ring, Reaction, Lower 1 - 1733 615 "O" Ring, Shaft Cover 1 - 1733 612 "O" Ring, Valve Housing 1 - 1733 593 Seal, Reaction, Upper 1 - 1822 203 Seal, Shaft Adjusting Screw 1 - ---- --- Seal, Shaft Dust 1 - 1730 985 Seal, Shaft Oil 1 - 1822 324 Seal, Worm Shaft Inner
	"O" RING and SEAL PACKAGE, POWER STEERING GEAR . . . . Part No. 2448 310 Consists of: 1 - 1733 724 Gasket, Valve Housing Plug 1 - 1733 602 "O" Ring, Column Support 2 - 1733 562 "O" Ring, Cylinder Head 1 - 1486 205 "O" Ring, Cylinder Head Ferrule 1 - 1823 150 "O" Ring, Housing 2 - 1556 385 "O" Ring, Housing Port 1 - 1536 268 "O" Ring, Pressure Control Valve 1 - 1823 091 "O" Ring, Reaction, Lower 1 - 1733 615 "O" Ring, Shaft Cover 1 - 1733 612 "O" Ring, Valve Housing 1 - 1733 593 Seal, Reaction, Upper 1 - 1822 203 Seal, Shaft Adjusting Screw 1 - ---- --- Seal, Shaft Dust 1 - 1730 985 Seal, Shaft Oil 1 - 1822 324 Seal, Worm Shaft Inner
19-01-4	Cont'd "O" RING and SEAL PACKAGE, POWER STEERING GEAR . . . . Part No. 2448 311 Consists of: 1 - 1733 724 Gasket, Valve Housing Plug 1 - 1733 602 "O" Ring, Column Support 2 - 1733 562 "O" Ring, Cylinder Head 1 - 1486 205 "O" Ring, Cylinder Head Ferrule 1 - 1823 150 "O" Ring, Housing 2 - 1556 385 "O" Ring, Housing Port 1 - 1536 268 "O" Ring, Pressure Control Valve 1 - 1822 149 "O" Ring, Reaction, Lower 1 - 1733 615 "O" Ring, Shaft Cover 1 - 1733 612 "O" Ring, Valve Housing 1 - 1822 151 Seal, Reaction, Upper 1 - 1822 203 Seal, Shaft Adjusting Screw 1 - ---- --- Seal, Shaft Dust 1 - 2126 956 Seal, Shaft Oil 1 - 1822 324 Seal, Worm Sleeve
19-02-4	HOUSING PACKAGE, POWER STEERING GEAR Part No. 2240 602 Consists of: 1 - ---- --- Housing 1 - 1823 150 "O" Ring 1 - 1823 151 Spring, Valve Lever
19-15-39	SPRING PACKAGE, POWER STEERING GEAR BALL GUIDE . . . . . Part No. 2084 215 Consists of: 2 - ---- --- Plug 2 - ---- --- Spring
19-19-1	SEAL PACKAGE, CROSS SHAFT COVER . . . . . Part No. 2279 986 Consists of: 1 - 1733 615 "O" Ring, Cover 1 - 1822 203 Seal, Shaft Adjusting Screw
19-19-40	WASHER PACKAGE, STEERING GEAR SHAFT ADJUSTING SCREW . . Part No. 2279 961 Consists of: 3 - ---- --- Washer
19-27-31	IDLER ARM PACKAGE, STEERING LINKAGE RHD. . . . . Part No. 2196 932 Consists of: 1 - ---- --- Arm 1 - 2072 490 Bolt 1 - 1734 327 Bushing 1 - ---- --- Nut, Bolt 1 - ---- --- Nut, End 1 - ---- --- Pin, End Nut Cotter 1 - ---- --- Seal, Arm End
19-48-7	SMALL PARTS PACKAGE, GEARSHIFT CONTROL. Part No. 2421 770 Consists of: 1 - 2208 159 Bushing, Torque Shaft Frame Bracket Grommet (Pkg. Cont'd)

★ Indicates use as required.
8 Indicates parts not listed in any previous parts book.
March 1966 Supersedes May 1965.

Printed in U.S.A.
Prices and specifications subject to change without notice.
* Indicates change or addition.
MyMopar.com

CODE	PART NAME AND PART NUMBER
19-48-7	Cont'd
	1 - 1676 200 Bushing, Torque Shaft Lever
	1 - 1676 200 Bushing, Transmission Gearshift Operating Lever Grommet
	1 - 1137 669 Clip, Control Rod
	1 - 6025 071 Clip, Control Rod
	1 - 2405 205 Clip, Control Rod Anti-Rattle
	1 - 1137 669 Clip, Control Rod Swivel
	1 - 6025 071 Clip, Control Rod Swivel
	1 - 2405 205 Clip, Control Rod Swivel Anti-Rattle
	1 - 2208 158 Grommet, Torque Shaft Frame Bracket
	1 - 1941 699 Grommet, Torque Shaft Lever
	1 - 1941 699 Grommet, Transmission Gearshift Operating Lever
	2 - 2208 172 Spacer, Torque Shaft
	2 - 631 217 Washer, Control Rod Plain
	2 - 631 217 Washer, Control Rod Swivel
	2 - 6023 085 Washer, Torque Shaft Plain
	1 - 6023 086 Washer, Torque Shaft Spring
	SMALL PARTS PACKAGE, GEARSHIFT CONTROL. Part No. 2421 771
	Consists of:
	1 - 2208 159 Bushing, Torque Shaft Frame Bracket Grommet
	1 - 1676 200 Bushing, Torque Shaft Lever Grommet
	1 - 1137 669 Clip, Control Rod
	1 - 2405 205 Clip, Control Rod
	1 - 6025 071 Clip, Control Rod
	1 - 1137 669 Clip, Control Rod Swivel
	1 - 6025 071 Clip, Control Rod Swivel
	1 - 2405 205 Clip, Control Rod Swivel Anti-Rattle
	1 - 2208 158 Grommet, Torque Shaft Frame Bracket
	1 - 1941 699 Grommet, Torque Shaft Lever
	2 - 2208 172 Spacer, Torque Shaft
	2 - 631 217 Washer, Control Rod Plain
	2 - 1533 190 Washer, Control Rod Swivel
	2 - 6023 085 Washer, Torque Shaft Plain
	1 - 6023 086 Washer, Torque Shaft Spring
	SMALL PARTS PACKAGE, GEARSHIFT CONTROL. Part No. 2421 772
	Consists of:
	2 - 1676 200 Bushing, Transmission Gearshift Operating Lever Grommet
	1 - 1137 669 Clip, Control Rod
	1 - 1137 669 Clip, Control Rod Swivel
	1 - 2405 205 Clip, Control Rod
	1 - 6025 071 Clip, Control Rod
	1 - 6025 071 Clip, Control Rod Swivel Anti-Rattle
	1 - 6025 071 Clip, Control Rod Swivel
	2 - 1941 699 Grommet, Transmission Gearshift Operating Lever
	2 - 631 217 Washer, Control Rod Plain
	2 - 631 217 Washer, Control Rod Swivel

CODE	PART NAME AND PART NUMBER
19-54-2	PUMP PACKAGE, POWER STEERING . . . Part No. 2196 082
	Consists of:
	1 - ---- --- Pump, Partial
	1 - 2120 019 Seal, Oil Reservoir Mounting
	1 - 2120 018 Seal, Oil Reservoir Oil
	PUMP PACKAGE, POWER STEERING . . . Part No. 2495 057
	Consists of:
	1 - ---- --- Pump, Partial
	1 - 1738 662 Seal, Oil Reservoir Mounting
	1 - 1732 946 Seal, Oil Reservoir Oil
19-54-55	SEAL PACKAGE, POWER STEERING PUMP . . . . . Part No. 2495 054
	Consists of:
	1 - 1732 946 Oil Seal, Oil Reservoir
	1 - 1738 662 Seal, Oil Reservoir Mounting
	2 - 2127 486 Seal, Oil Reservoir Mounting
	SEAL PACKAGE, POWER STEERING PUMP . . . . . Part No. 2279 998
	Consists of:
	1 - 2120 018 Oil Seal, Oil Reservoir
	1 - 2120 019 Seal, Oil Reservoir Mounting
	2 - 2127 486 Seal, Oil Reservoir Mounting
19-54-228	SLIPPER SPRING REPAIR PACKAGE, POWER STEERING PUMP . . . . Part No. 2448 097
	Consists of:
	1 - 1852 920 Gasket, Oil Pressure Relief Valve
	1 - 2120 017 Seal, Flow Control Valve Plug
	1 - 2128 275 Seal, Front Insert
	1 - 1738 662 Seal, Oil Reservoir Mounting
	1 - ---- --- Seal, Rotor Shaft Oil
	1 - 1738 678 Snap Ring, Flow Control Valve Bore
	8 - ---- --- Spring, Rotor Slipper
	SLIPPER SPRING REPAIR PACKAGE, POWER STEERING PUMP . . . Part No. 2495 053
	Consists of:
	1 - 1852 920 Gasket, Oil Pressure Relief Valve
	1 - ---- --- Plug, Flow Control Valve Bore
	1 - 2120 017 Seal, Flow Control Valve Plug
	1 - ---- --- Seal, Front Insert
	1 - 1738 662 Seal, Oil Reservoir Mounting
	1 - ---- --- Seal, Rotor Shaft Oil
	1 - 1738 678 Snap Ring, Flow Control Valve Bore
	8 - ---- --- Spring, Rotor Slipper
	2 - 2127 486 Seal, Oil Reservoir Mounting

★ Indicates use as required.
⊟ Indicates parts not listed in any previous parts book.
* Indicates change or addition.

Printed in U.S.A.
Prices and specifications subject to change without notice.
March 1966 Supersedes May 1965.

MyMopar.com

CODE	PART NAME AND PART NUMBER
19-57-1	SEAL PACKAGE, POWER STEERING GEAR VALVE Part No. 2279 985 Consists of: 1 - 1733 724 Gasket, Plug Valve Housing 1 - 1823 150 "O" Ring, Housing 2 - 1556 385 "O" Ring, Housing Port 1 - 1536 268 "O" Ring, Pressure Control Valve Body 1 - 1733 612 "O" Ring, Valve Housing 1 - 1822 442 Spring
19-57-2	PISTON and SPRING PACKAGE, POWER STEERING GEAR PRESSURE CONTROL VALVE . . . . . Part No. 1879 509 Consists of: 1 - ---- --- Piston
21-01-3	GASKET and SEAL PACKAGE, MANUAL TRANSMISSION Part No. 2275 893 Consists of: 1 - 2124 466 Gasket, Case Cover 1 - 2124 519 Gasket, Extension 2 - 2124 496 Gasket, Bearing Retainer 1 - 2124 497 Gasket, Bearing Retainer 1 - 1949 343 Seal, Drive Pinion 1 - 2205 080 Seal, Output Shaft Oil
	GASKET and SEAL PACKAGE, MANUAL TRANSMISSION Part No. 2275 896 Consists of: 1 - 1949 346 Gasket, Case Cover 2 - 865 180 Gasket, Bearing Retainer 1 - 865 181 Gasket, Bearing Retainer 1 - 1949 361 Gasket, Extension 1 - 1949 343 Seal, Drive Pinion 1 - 1854 449 Seal, Output Shaft Oil
	GASKET and SEAL PACKAGE, MANUAL 4 SPEED TRANSMISSION Part No. 2448 790 Consists of: 1 - 2464 059 Gasket, Extension 1 - 2124 499 Gasket, Pinion Bearing Retainer 1 - 2464 037 Gasket, Gearshift Housing 1 - 1949 343 Seal, Pinion Bearing 1 - 2205 080 Seal, Mainshaft 1 - 2124 518 Snap Ring, Pinion Bearing
	GASKET and SEAL PACKAGE, MANUAL TRANSMISSION . . . . . Part No. 2196 062 Consists of: 1 - 1949 346 Gasket, Case Cover 3 - 865 180 Gasket, Bearing Retainer 1 - 1949 361 Gasket, Extension 2 - 1949 350 Seal, Lever Shaft 1 - 1949 343 Seal, Drive Pinion Oil 1 - ---- --- Seal Main Shaft
21-01-3	Cont'd GASKET and SEAL PACKAGE, MANUAL TRANSMISSION . . . . . Part No. 2585 543 Consists of: 1 - 2464 059 Gasket, Extension 1 - 2464 492 Seal, Drive Pinion Bearing 1 - 2124 499 Gasket, Drive Pinion Bearing Retainer 1 - 2205 080 Seal, Output Shaft 1 - 2464 037 Gasket, Gearshift Housing 1 - 2124 518 Snap Ring, Drive Pinion Bearing Outer
	SEAL and GASKET PACKAGE, AUTOMATIC TRANSMISSION . . . . . Part No. 2495 037 Consists of: 1 - 2400 064 Gasket, Extension 1 - 2400 863 Gasket, Oil Pan Drain Plug 1 - 2464 324 Gasket, Oil Pan 1 - 2205 207 Gasket, Parking Lock Cover 1 - 2124 846 Gasket, Front Oil Pump Housing 2 - 1942 109 Ring, Governor Support Seal 2 - 2124 813 Ring, Reaction Shaft Support Seal 1 - 2124 851 Ring, Servo Piston Seal, Small 1 - 1942 123 Ring, Servo Piston Seal, Large 1 - 1942 123 Ring, Servo Guide Seal 1 - 1942 130 Ring, Servo Piston Rod Guide 1 - 1941 831 Ring, Accumulator, Piston Seal, Small 1 - 2124 255 Ring, Accumulator Piston Seal, Large 1 - 1823 940 Ring, Reverse Servo Piston Plug 2 - 1942 041 Ring, Input Shaft Seal 1 - 1942 020 Seal, Impeller Hub 1 - 1942 021 Seal, Front Oil Pump Housing 1 - 2124 820 Seal, Front Clutch Piston, Inner 1 - 2124 821 Seal, Front Clutch Piston, Outer 1 - 1942 054 Seal, Rear Clutch Piston, Inner 1 - 2124 835 Seal, Rear Clutch Piston, Outer 1 - 2205 080 Seal, Output Shaft 1 - 2205 300 Seal, Throttle Lever Shaft 1 - 2464 481 Seal, Reverse, Servo Piston, After 1 - 1942 148 Seal, Reverse Servo Piston, Up-To 1 - 6024 312 Snap Ring, Output Shaft .055 1 - ---- --- Snap Ring, Output Shaft .062 1 - 6022 816 Snap Ring, Output Shaft .048 1 - 2400 843 Washer, Output Shaft Thrust

★ Indicates use as required.
⊟ Indicates parts not listed in any previous parts book.
March 1966 Supersedes May 1965.

Printed in U.S.A.
Prices and specifications subject to change without notice.
• Indicates change or addition.

MyMopar.com

CODE	PART NAME AND PART NUMBER

21-01-3 Cont'd

GASKET and SEAL PACKAGE, AUTOMATIC TRANSMISSION . . . . . Part No. 2495 091

Consists of:

1 - 2205 299 Gasket, Oil Pan
1 - 1942 390 Gasket, Reaction Shaft Support
1 - 2205 322 Gasket, Extension
1 - 2205 207 Gasket, Parking Lock Cover
2 - 2124 258 Plate, Sun Gear Shell Thrust
2 - 1942 109 Ring, Governor Support Seal
3 - 1941 831 Ring, Input Shaft Seal
2 - 1942 389 Ring, Reaction Shaft Support Seal
1 - 6022 859 Ring, Output Shaft Snap
1 - 1942 486 Ring, Kickdown Rod Guide
1 - 2124 255 Ring, Accumulator Piston Seal, Large
1 - 2464 462 Ring, Reverse Servo Piston Seal
1 - 1823 940 Ring, Reverse Servo Piston Plug Snap
1 - 2464 464 Ring, Reverse Servo Piston Spring Retainer Snap
2 - 1636 470 Ring, Kickdown Servo Piston Seal, Large
1 - 1672 287 Ring, Kickdown Servo Piston Seal, Small
1 - 6024 822 Snap Ring, Output Shaft, .040
1 - 6024 823 Snap Ring, Output Shaft, .048
1 - 2125 187 Seal, Rear Clutch Piston, Inner
1 - 2124 705 Seal, Torque Converter Impeller Hub
1 - 1942 396 Seal, Front Clutch Piston, Inner
2 - 1942 397 Seal, Clutch Piston, Outer
1 - 2204 709 Seal, Front Oil Pump Housing
1 - 2464 482 Seal, Output Shaft
1 - 2466 036 Seal, Throttle Lever Shaft
1 - 2466 090 Washer, Output Shaft Thrust, .052
1 - 2466 169 Washer, Output Shaft Thrust, .068
1 - 2466 170 Washer, Output Shaft Thrust, .083
2 - 2204 369 Washer, Front Clutch Thrust
2 - 2400 528 Washer, Sun Gear Driving Shell Thrust

GASKET and SEAL PACKAGE, AUTOMATIC TRANSMISSION . . . . . Part No. 2525 482

Consists of:

1 - 2400 064 Gasket, Extension
1 - 2124 846 Gasket, Front Oil Pump Housing
1 - 2400 863 Gasket, Oil Pan Drain Plug
1 - 2205 202 Gasket, Oil Filter
1 - 2466 049 Gasket, Output Shaft Bearing Cover
1 - 2464 324 Gasket, Oil Pan
1 - 2466 904 Gasket, Parking Lock Cover
1 - 1942 021 Oil Seal, Front Oil Pump Housing

(Pkg. Cont'd)

21-01-3 Cont'd

1 - 1942 020 Oil Seal, Torque Converter Impeller Hub
1 - 1941 831 Ring, Accumulator Piston Seal, Small
1 - 2124 255 Ring, Accumulator Piston Seal, Large
1 - 1942 109 Ring, Governor Support Seal
2 - 1942 041 Ring, Input Shaft Seal
1 - 2124 851 Ring, Kickdown Servo Piston Seal, Small
1 - 1942 123 Ring, Kickdown Servo Piston Seal, Large
1 - 1942 123 Ring, Kickdown Servo Guide Seal
2 - 2124 813 Ring, Reaction Shaft Support Seal
1 - 2124 820 Seal, Front Clutch Piston, Inner
1 - 2124 821 Seal, Front Clutch Piston, Outer
1 - 2466 548 Seal, Throttle Lever Shaft
1 - 1316 813 Seal, Gearshift Control Cable
1 - 2400 300 Seal, Output Shaft
1 - 2464 481 Seal, Reverse Servo Piston
1 - 1942 054 Seal, Rear Clutch Piston, Inner
1 - 2124 835 Seal, Rear Clutch Piston, Outer
1 - 1942 259 Seal, Speedometer Cable Adapter
1 - 2124 328 Seal, Speedometer Pinion
1 - 1942 130 Snap Ring, Kickdown Servo Piston Rod Guide
1 - 6022 816 Snap Ring, Output Shaft, .048
1 - 6024 311 Snap Ring, Output Shaft, .055
1 - 6024 312 Snap Ring, Output Shaft, .062
1 - 1823 940 Snap Ring, Reverse Servo Piston Plug
1 - 2400 843 Washer, Output Shaft Thrust

GASKET and SEAL PACKAGE, AUTOMATIC TRANSMISSION . . . . . Part No. 2525 483

Consists of:

1 - 2400 064 Gasket, Extension
1 - 2124 846 Gasket, Front Oil Pump Housing
1 - 2205 202 Gasket, Oil Filter
1 - 2464 324 Gasket, Oil Pan
1 - 2466 049 Gasket, Output Shaft Bearing Cover
1 - 1941 831 Ring, Accumulator Piston Seal, Small
1 - 2124 255 Ring, Accumulator Piston Seal, Large
2 - 1942 041 Ring, Input Shaft Seal
1 - 2124 851 Ring, Kickdown Servo Piston Seal, Small
1 - 1942 123 Ring, Kickdown Servo Piston Seal, Large

MyMopar.com

CODE	PART NAME AND PART NUMBER

21-01-3 Cont'd
- 1 - 1942 123 Ring, Kickdown Servo Guide Seal
- 1 - 2124 820 Seal, Front Clutch Piston, Inner
- 1 - 2124 821 Seal, Front Clutch Piston, Outer
- 1 - 1942 021 Seal, Front Oil Pump Housing
- 1 - 1316 813 Seal, Gearshift Control Cable
- 1 - 2400 300 Seal, Output Shaft
- 1 - 1942 054 Seal, Rear Clutch Piston, Inner
- 1 - 2124 835 Seal, Rear Clutch Piston, Outer
- 1 - 2464 481 Seal, Reverse Servo Piston
- 1 - 1942 259 Seal, Speedometer Cable Adapter
- 1 - 2124 328 Seal, Speedometer Pinion
- 1 - 2466 548 Seal, Throttle Lever Shaft
- 1 - 1942 020 Seal, Torque Converter Impeller Hub
- 2 - 2124 813 Seal, Torque Converter Reaction Shaft Support
- 1 - 1942 130 Snap Ring, Kickdown Servo Piston Rod Guide
- 1 - 6022 816 Snap Ring, Output Shaft, .048
- 1 - 6024 311 Snap Ring, Output Shaft, .055
- 1 - 6024 312 Snap Ring, Output Shaft, .062
- 1 - 2400 843 Washer, Output Shaft Thrust

21-113-24 SWITCH PACKAGE, AUTOMATIC TRANSMISSION NEUTRAL STARTER . . . . . Part No. 2495 537
Consists of:
- 1 - ---- --- Switch, Neutral Starter
- 1 - ---- --- Washer, Mounting

21-118-6 ROTOR PACKAGE, AUTOMATIC TRANSMISSION FRONT OIL PUMP . . . . . Part No. 2240 302
Consists of:
- 1 - ---- --- Rotor, Front Oil Pump, Inner
- 1 - ---- --- Rotor, Front Oil Pump, Outer

ROTOR PACKAGE, AUTOMATIC TRANSMISSION FRONT OIL PUMP . . . . . Part No. 2275 497
Consists of:
- 1 - ---- --- Rotor, Front Oil Pump, Inner
- 1 - ---- --- Rotor, Front Oil Pump, Outer

ROTOR PACKAGE, AUTOMATIC TRANSMISSION, REAR OIL PUMP . . . . . Part No. 2275 496
Consists of:
- 1 - ---- --- Rotor, Rear Oil Pump, Inner
- 1 - ---- --- Rotor, Rear Oil Pump, Outer

21-118-6 Cont'd

ROTOR PACKAGE, AUTOMATIC TRANSMISSION FRONT OIL PUMP . . . . . Part No. 2585 224
Consists of:
- 1 - ---- --- Rotor, Front Oil Pump, Inner
- 1 - ---- --- Rotor, Front Oil Pump, Outer

ROTOR PACKAGE, AUTOMATIC TRANSMISSION REAR OIL PUMP . . . . . Part No. 2495 090
Consists of:
- 1 - ---- --- Rotor, Rear Oil Pump, Inner
- 1 - ---- --- Rotor, Rear Oil Pump, Outer

21-136-228 CAM and RETAINER PACKAGE, AUTOMATIC TRANSMISSION OVERRUNNING CLUTCH . . . Part No. 2421 281
Consists of:
- 1 - ---- --- Cam
- 1 - ---- --- Retainer
- 6 - 138 212 Screw
- 6 - ---- --- Washer

21-138-2 REPAIR PACKAGE, AUTOMATIC TRANSMISSION GOVERNOR . . Part No. 2275 498
Consists of:
- 1 - ---- --- Body, Governor
- 4 - ---- --- Bolt, Body
- 2 - 2125 024 Lock, Bolt
- 2 - 1942 109 Ring, Support Seal
- 1 - 1556 082 Shaft, Governor Valve
- 1 - 6022 817 Snap Ring, Body
- 1 - 1636 464 Snap Ring, Weight, Inner
- 1 - 1636 465 Snap Ring, Weight, Outer
- 2 - 1638 461 Snap Ring, Valve Shaft
- 1 - 1949 858 Spring, Governor
- 1 - 2124 663 Valve, Governor
- 1 - 1636 462 Weight, Governor, Inner
- 1 - 1636 461 Weight, Governor, Outer

REPAIR PACKAGE, AUTOMATIC TRANSMISSION GOVERNOR . . Part No. 2298 514
Consists of:
- 1 - ---- --- Body, Governor
- 4 - ---- --- Bolt, Body
- 2 - 2125 024 Lock, Body Bolt
- 2 - 1942 109 Ring, Support Seal
- 1 - 1556 082 Shaft, Valve
- 1 - 6022 817 Snap Ring, Body
- 1 - 1636 464 Snap Ring, Weight, Inner
- 1 - 1636 465 Snap Ring, Weight, Outer
- 2 - 1638 461 Snap Ring, Valve Shaft
- 1 - 1949 859 Spring, Governor
- 1 - 2124 663 Valve, Governor
- 1 - 1636 462 Weight, Governor, Inner
- 1 - 1636 461 Weight, Governor, Outer

MyMopar.com

CODE	PART NAME AND PART NUMBER
21-138-2	Cont'd REPAIR PACKAGE, AUTOMATIC TRANS- MISSION GOVERNOR . . Part No. 2196 998 Consists of: 1 - ---- --- Body, Governor 2 - 2125 024 Lock, Body Bolt 4 - ---- --- Bolt, Body 2 - 1942 109 Ring, Support Seal or Piston 1 - 1636 464 Snap Ring, Weight, Inner 1 - 1636 465 Snap Ring, Weight, Outer 2 - 1638 461 Snap Ring, Valve Shaft 1 - ---- --- Snap Ring, Body 1 - 2124 662 Spring, Governor 1 - 1556 082 Shaft, Valve 1 - 2124 663 Valve, Governor 1 - 1636 461 Weight, Governor, Outer 1 - 1636 462 Weight, Governor, Inner
	REPAIR PACKAGE, AUTOMATIC TRANS- MISSION GOVERNOR . . Part No. *2585 589 Consists of: 1 - ---- --- Body, Governor 2 - ---- --- Ring, Support Seal 1 - 1636 461 Weight, Governor, Outer 1 - 1636 462 Weight, Governor, Inner 1 - 1636 464 Snap Ring, Weight, Inner 1 - 1636 465 Snap Ring, Weight, Outer 1 - 2124 663 Valve, Governor 1 - 1556 082 Shaft, Governor Valve 2 - 1638 461 Snap Ring, Valve Shaft 1 - 6022 817 Snap Ring, Body 2 - 2125 024 Lock, Bolt 1 - 2124 662 Spring, Governor
22-01-46	EXTENSION PACKAGE, VALVE STEM . . . . . Part No. *2530 154 Consists of: 4 - ---- --- Extension, Valve Stem
	EXTENSION PACKAGE, VALVE STEM . . . . Part No. *2530 155 Consists of: 4 - ---- --- Extension, Valve Stem
	EXTENSION PACKAGE, VALVE STEM . . . . . Part No. *2401 840 Consists of: 4 - ---- --- Extension, Valve Stem
23-14-53	HANDLE PACKAGE, FRONT DOOR VENT WING . . . . . Part No. 2299 433 Consists of: 1 - ---- --- Handle, Right 1 - 6022 856 Washer 1 - 9418 006 Pin
	HANDLE PACKAGE, FRONT DOOR VENT WING . . . . . Part No. 2299 434 Consists of: 1 - ---- --- Handle, Left 1 - 6022 856 Washer 1 - 9418 006 Pin

CODE	PART NAME AND PART NUMBER
23-14-53	Cont'd CYLINDER and KEY PACKAGE, DOOR and IGNITION LOCK . . . . Part No. 2520 822 Consists of: 1 - ---- --- Cylinder, Ignition 1 - ---- --- Cylinder, Door, Right 1 - ---- --- Cylinder, Door, Left 1 - ---- --- Key
	CYLINDER and KEY PACKAGE, DOOR and IGNITION LOCK . . . . Part No. 2520 825 Consists of: 1 - ---- --- Cylinder, Ignition 1 - ---- --- Cylinder, Door, Right 1 - ---- --- Cylinder, Door, Left 1 - ---- --- Key
23-17-2	CYLINDER and KEY PACKAGE, DOOR and IGNITION LOCK . . . . Part No. 2161 192 Consists of: 1 - ---- --- Cylinder, Ignition 1 - ---- --- Cylinder, Door, Right 1 - ---- --- Cylinder, Door, Left 2 - ---- --- Keys
	CYLINDER and KEY PACKAGE, DOOR and IGNITION LOCK . . . . Part No. 2499 022 Consists of: 1 - ---- --- Cylinder, Ignition 1 - ---- --- Cylinder, Door, Right 1 - ---- --- Cylinder, Door, Left 1 - ---- --- Key
	CYLINDER and KEY PACKAGE, DOOR, IGNITION and MANUAL TAILGATE LOCK. . . . Part No. 2162 531 Consists of: 1 - ---- --- Cylinder, Ignition 1 - ---- --- Cylinder, Door, Right 1 - ---- --- Cylinder, Door, Left 1 - ---- --- Cylinder, Tailgate 2 - ---- --- Keys
	CYLINDER and KEY PACKAGE, DOOR, IGNITION and MANUAL TAILGATE LOCK. . . . Part No. 2419 183 Consists of: 1 - ---- --- Cylinder, Ignition 1 - ---- --- Cylinder, Door, Right 1 - ---- --- Cylinder, Door, Left 1 - ---- --- Cylinder, Tailgate 2 - ---- --- Keys
	CYLINDER and KEY PACKAGE, DOOR, IGNITION and ELECTRIC TAILGATE LOCK . . . Part No. 2520 824 Consists of: 1 - ---- --- Cylinder, Ignition 1 - ---- --- Cylinder, Door, Right 1 - ---- --- Cylinder, Door, Left 1 - ---- --- Cylinder, Tailgate 2 - ---- --- Keys

MyMopar.com

CODE	PART NAME AND PART NUMBER
23-17-2	Cont'd CYLINDER and KEY PACKAGE, DOOR, IGNITION and ELECTRIC TAILGATE LOCK . . . Part No. 2076 533 Consists of: 1 - ---- --- Cylinder, Ignition 1 - ---- --- Cylinder, Door, Right 1 - ---- --- Cylinder, Door, Left 1 - ---- --- Cylinder, Tailgate 2 - ---- --- Keys
23-17-4	CYLINDER and KEY PACKAGE, DECK LID and GLOVE BOX LOCK Part No. 2499 149 Consists of: 1 - ---- --- Cylinder, Deck Lid 1 - ---- --- Latch, w/Sleeve, Glove Box 1 - ---- --- Key
	CYLINDER and KEY PACKAGE, DECK LID and GLOVE BOX LOCK Part No. 2520 807 Consists of: 1 - ---- --- Cylinder, Deck Lid 1 - ---- --- Latch, w/Sleeve, Glove Box 1 - ---- --- Key
	CYLINDER and KEY PACKAGE, DECK LID and GLOVE BOX LOCK Part No. 2520 810 Consists of: 1 - ---- --- Cylinder, Deck Lid 1 - ---- --- Latch, w/Sleeve, Glove Box 1 - ---- --- Key
	CYLINDER and KEY PACKAGE, DECK LID and GLOVE BOX LOCK .Part No. 2520 813 Consists of: 1 - ---- --- Cylinder, Deck Lid 1 - ---- --- Cylinder, Glove Box 1 - ---- --- Key
	CYLINDER and KEY PACKAGE, DECK LID and GLOVE BOX LOCK Part No. 2520 819 Consists of: 1 - ---- --- Cylinder, Deck Lid 1 - ---- --- Latch, w/Sleeve, Glove Box 1 - ---- --- Key
	CYLINDER and KEY PACKAGE, DECK LID and GLOVE BOX LOCK Part No. 2520 820 Consists of: 1 - ---- --- Cylinder, Deck Lid 1 - ---- --- Latch, w/Sleeve, Glove Box 1 - ---- --- Key
	CYLINDER and KEY PACKAGE, DECK LID and GLOVE BOX LOCK Part No. *2440 017 Consists of: 1 - ---- --- Cylinder, Deck Lid 1 - ---- --- Latch w/Sleeve, Glove Box 1 - ---- --- Key
23-17-4	Cont'd CYLINDER and KEY PACKAGE, DECK LID and GLOVE BOX LOCK Part No. *2520 808 Consists of: 1 - ---- --- Cylinder, Deck Lid 1 - ---- --- Latch, and Sleeve w/Link, Glove Box 1 - ---- --- Key
	CYLINDER and KEY PACKAGE, DECK LID and GLOVE BOX LOCK Part No. *2520 818 Consists of: 1 - ---- --- Cylinder, Deck Lid 1 - ---- --- Latch and Sleeve w/Link, Glove Box 1 - ---- --- Key
23-17-5	CYLINDER and KEY PACKAGE, DECK LID LOCK . . . . . Part No. 2162 613 Consists of: 1 - ---- --- Cylinder 2 - ---- --- Keys
	CYLINDER and KEY PACKAGE, DECK LID LOCK . . . . . Part No. 2440 019 Consists of: 1 - ---- --- Cylinder 2 - ---- --- Keys
	CYLINDER and KEY PACKAGE, DECK LID LOCK . . . . . Part No. 2581 160 Consists of: 1 - ---- --- Cylinder 2 - ---- --- Keys
23-17-24	CYLINDER and KEY PACKAGE, DOOR LOCK Part No. 2161 356 Consists of: 2 - ---- --- Cylinders 2 - ---- --- Keys
	CYLINDER and KEY PACKAGE, DOOR LOCK Part No. 2499 027 Consists of: 2 - ---- --- Cylinders 2 - ---- --- Keys
	CYLINDER and KEY PACKAGE, DOOR LOCK Part No. 2583 165 Consists of: 2 - ---- --- Cylinders 2 - ---- --- Keys
23-17-38	CYLINDER and KEY PACKAGE, FLOOR CONSOLE LOCK . . . . Part No. 2499 275 Consists of: 1 - ---- --- Latch 2 - ---- --- Keys

MyMopar.com

CODE	PART NAME AND PART NUMBER
23-17-49	CYLINDER and KEY PACKAGE, ELECTRIC TAILGATE LOCK . . . Part No. 2161 423 Consists of: 1 - ---- --- Cylinder 2 - ---- --- Keys
	CYLINDER and KEY PACKAGE, MANUAL TAILGATE LOCK. . . . Part No. 2162 536 Consists of: 1 - ---- --- Cylinder 2 - ---- --- Keys
	CYLINDER and KEY PACKAGE, MANUAL TAILGATE LOCK . . . Part No. 2419 271 Consists of: 1 - ---- --- Cylinder 2 - ---- --- Keys
23-17-72	CYLINDER and KEY PACKAGE, TIREWELL COVER LOCK . . . . . Part No. 2292 051 Consists of: 1 - ---- --- Cylinder 2 - ---- --- Keys
	CYLINDER and KEY PACKAGE, TIREWELL COVER LOCK . . . . . Part No. 2583 166 Consists of: 1 - ---- --- Cylinder 2 - ---- --- Keys
23-41-34	REPAIR PACKAGE, ELECTRIC WINDOW LIFT REGULATOR MECHANISM . . . . . Part No. 2495 249 Consists of: 1 - ---- --- Gear, w/Pinion 1 - ---- --- Seal
23-41-106	MOTOR, w/MECHANISM, ELECTRIC WINDOW LIFT . . . . . Part No. *2583 856 Consists of: 1 - ---- --- Motor 1 - 2583 610 Pad
23-41-176	CONNECTOR and TERMINAL PACKAGE, ELECTRIC WINDOW LIFT SWITCH Part No. 2495 234 Consists of: 1 - ---- --- Body, Insulator 1 - ---- --- Cover, Insulator 3 - ---- --- Terminal
	CONNECTOR and TERMINAL PACKAGE, ELECTRIC WINDOW LIFT SWITCH Part No. 2495 235 Consists of: 1 - ---- --- Body, Insulator 1 - ---- --- Cover, Insulator 3 - ---- --- Terminal
23-41-176 Cont'd	CONNECTOR and TERMINAL PACKAGE, ELECTRIC WINDOW LIFT SWITCH Part No. 2495 236 Consists of: 1 - ---- --- Body, Insulator 1 - ---- --- Cover, Insulator 6 - ---- --- Terminal
	CONNECTOR and TERMINAL PACKAGE, ELECTRIC WINDOW LIFT SWITCH Part No. 2495 237 Consists of: 1 - ---- --- Body, Insulator 1 - ---- --- Cover, Insulator 1 - ---- --- Terminal
23-47-414	COIL PACKAGE, FRONT SEAT ADJUSTER MAGNETIC . . . . . Part No. 1830 290 Consists of: 1 - ---- --- Cap, Cover 1 - ---- --- Coil 1 - ---- --- Cover
23-47-451	BEZEL PACKAGE, FRONT SEAT ELECTRIC ADJUSTING SWITCH. . Part No. 2421 142 Consists of: 1 - ---- --- Bezel 2 - ---- --- Screw 1 - 2419 082 Bezel 2 - 167 577 Screw
23-54-67	REPAIR PACKAGE, TAILGATE OUTSIDE HANDLE . . . . . Part No. 2584 539 Consists of: 2 - ---- --- Handle 1 - 9417 402 Pin 2 - 1960 017 Set Screw
23-54-73	HANDLE PACKAGE, TAILGATE WINDOW REGULATOR OUTSIDE COMPLETE . . . . . Part No. 2299 444 Consists of: 1 - 2299 715 Gasket 1 - ---- --- Handle, Complete 3 - 116 000 Nut, w/Washer
23-54-180	HANDLE PACKAGE, TAILGATE RELEASE. . Part No. 2586 442 Consists of: 1 - 2583 508 Bezel 6 - 6025 889 Bolt 1 - 2583 509 Boot 1 - 2583 501 Control 1 - 2583 506 Knob 2 - 6023 166 Nut 1 - 9423 017 Screw 1 - 2583 536 Seal 1 - 2583 537 Seal 1 - 2583 510 Sleeve 2 - 2583 535 Spacer

★ Indicates use as required.
⊟ Indicates parts not listed in any previous parts book.
* Indicates change or addition.

Printed in U.S.A.
Prices and specifications subject to change without notice.
March 1966 Supersedes May 1965.

MyMopar.com

CODE	PART NAME AND PART NUMBER
23-58-78	PLATE PACKAGE, FOLDING TOP NUMBER ONE BOW BRACKET ADJUSTING . . . . . Part No. 2784 433 Consists of: 2 - ---- --- Bushing 2 - ---- --- Plate 2 - ---- --- Rivet 2 - ---- --- Washer
23-58-381	ROTOR PACKAGE, TOP LIFT PUMP . . . Part No. 2480 448 Consists of: 1 - ---- --- Rotor, Inner 1 - ---- --- Rotor, Outer
	ROTOR PACKAGE, TOP LIFT PUMP . . . Part No. 2484 183 Consists of: 1 - ---- --- Rotor, Inner 1 - ---- --- Rotor, Outer
	ROTOR PACKAGE, TOP LIFT PUMP . . . Part No. 2573 840 Consists of: 1 - ---- --- Rotor, Inner 1 - ---- --- Rotor, Outer
23-58-388	BOLT PACKAGE, TOP LIFT PUMP RESERVOIR . . . . . Part No. 2480 444 Consists of: 1 - ---- --- Bolt 1 - ---- --- "O" Ring 1 - ---- --- Washer
	BOLT PACKAGE, TOP LIFT PUMP RESERVOIR Part No. 2573 839 Consists of: 1 - ---- --- Bolt 1 - ---- --- "O" Ring 1 - ---- --- Washer
23-64-81	TERMINAL and INSULATOR PACKAGE, ELECTRIC VENT WING MOTOR WIRING . Part No. 2495 239 Consists of: 1 - ---- --- Insulator 1 - ---- --- Terminal
23-67-2	PARKING CAM PACKAGE, WINDSHIELD WIPER MOTOR . . . . . Part No. 2525 346 Consists of: 1 - ---- --- Release, Parking Cam 1 - ---- --- Cam 1 - ---- --- Spring, Parking 1 - ---- --- Washer, Cam Mounting 1 - 1770 289 Washer, Drive Link 1 - 1770 290 Spring Washer, Drive Link 1 - 1642 029 Retainer, Wiper Link

CODE	PART NAME AND PART NUMBER
23-67-10	GEAR and GASKET PACKAGE, WINDSHIELD WIPER MOTOR . . . . . Part No. 1879 598 Consists of: 1 - ---- --- Gasket, Cover 1 - ---- --- Gear
	GEAR and GASKET PACKAGE, WINDSHIELD WIPER MOTOR . . . . . Part No. 2448 264 Consists of: 1 - ---- --- Gasket, Cover 1 - ---- --- Gear
	GEAR and GASKET PACKAGE, WINDSHIELD WIPER MOTOR . . . . . Part No. 2448 267 Consists of: 1 - ---- --- Gasket, Cover 1 - ---- --- Gear
	GEAR and GASKET PACKAGE, WINDSHIELD WIPER MOTOR . . . . Part No. 2448 608 Consists of: 1 - ---- --- Gasket, Cover 1 - ---- --- Gear
	GEAR and GASKET PACKAGE, WINDSHIELD WIPER MOTOR . . . . . Part No. 2495 548 Consists of: 1 - ---- --- Gasket 1 - ---- --- Gear
	GEAR and GASKET PACKAGE, WINDSHIELD WIPER MOTOR . . . . . Part No. 2448 282 Consists of: 1 - ---- --- Gasket, Cover 1 - ---- --- Gear
	GEAR and GASKET PACKAGE, WINDSHIELD WIPER MOTOR . . . . . Part No. 2584 976 Consists of: 1 - ---- --- Gasket, Cover 1 - ---- --- Gear
	GEAR and GASKET PACKAGE, WINDSHIELD WIPER MOTOR . . . . . Part No. 2584 978 Consists of: 1 - ---- --- Gasket, Cover 1 - ---- --- Gear
	GEAR and GASKET PACKAGE, WINDSHIELD WIPER MOTOR . . . . . Part No. 2585 043 Consists of: 1 - ---- --- Gasket 1 - ---- --- Gear

★ Indicates use as required.
⊟ Indicates parts not listed in any previous parts book.
March 1966 Supersedes May 1965.

Printed in U.S.A.
Prices and specifications subject to change without notice.
* Indicates change or addition.

MyMopar.com

CODE	PART NAME AND PART NUMBER
23-67-16	BRUSH and SPRING PACKAGE, WINDSHIELD WIPER MOTOR . . . . . Part No. 1627 273 Consists of: 2 - ---- --- Brush 2 - ---- --- Spring
	BRUSH and SPRING PACKAGE, WINDSHIELD WIPER MOTOR . . . . Part No. 1752 518 Consists of: 2 - ---- --- Brush 2 - ---- --- Spring
	BRUSH and SPRING PACKAGE, WINDSHIELD WIPER MOTOR . . . . . Part No. 2084 269 Consists of: 2 - ---- --- Brush 2 - ---- --- Spring
	BRUSH and SPRING PACKAGE, WINDSHIELD WIPER MOTOR . . . . . Part No. 2448 265 Consists of: 2 - ---- --- Brush 1 - ---- --- Spring
	BRUSH and SPRING PACKAGE, WINDSHIELD WIPER MOTOR . . . . . Part No. 2448 606 Consists of: 2 - ---- --- Brush 2 - ---- --- Spring
	BRUSH and SPRING PACKAGE, WINDSHIELD WIPER MOTOR . . . . . Part No. 2525 250 Consists of: 1 - ---- --- Brush 1 - ---- --- Spring
	BRUSH and SPRING PACKAGE, WINDSHIELD WIPER MOTOR . . . . . Part No. 2584 980 Consists of: 2 - ---- --- Brush 1 - ---- --- Spring
	BRUSH and SPRING PACKAGE, WINDSHIELD WIPER MOTOR . . . . . Part No. 2585 025 Consists of: 2 - ---- --- Brush 2 - ---- --- Spring
	BRUSH and SPRING PACKAGE, WINDSHIELD WIPER MOTOR . . . . . Part No. 2585 045 Consists of: 2 - ---- --- Brush 2 - ---- --- Spring

CODE	PART NAME AND PART NUMBER
23-67-20	GROMMET PACKAGE, WINDSHIELD WIPER MOTOR MOUNTING . . Part No. 2421 482 Consists of: 3 - ---- --- Grommet 3 - ---- --- Spacer
23-67-164	PLATE and GASKET PACKAGE, WINDSHIELD WIPER MOTOR SWITCH Part No. 2298 876 Consists of: 1 - ---- --- Gasket 1 - ---- --- Plate
	PLATE and GASKET PACKAGE, WINDSHIELD WIPER MOTOR SWITCH Part No. 2448 263 Consists of: 1 - ---- --- Gasket 1 - ---- --- Plate
	PLATE and GASKET PACKAGE, WINDSHIELD WIPER MOTOR SWITCH Part No. 2448 266 Consists of: 1 - ---- --- Gasket 1 - ---- --- Plate
	PLATE and GASKET PACKAGE, WINDSHIELD WIPER MOTOR SWITCH Part No. 2448 607 Consists of: 1 - ---- --- Gasket 1 - ---- --- Plate
	PLATE and GASKET PACKAGE, WINDSHIELD WIPER MOTOR SWITCH Part No. 2495 549 Consists of: 1 - ---- --- Gasket 1 - ---- --- Plate
	PLATE and GASKET PACKAGE, WINDSHIELD WIPER MOTOR SWITCH Part No. 2448 282 Consists of: 1 - ---- --- Gasket 1 - ---- --- Plate
	PLATE and GASKET PACKAGE, WINDSHIELD WIPER MOTOR SWITCH Part No. 2584 977 Consists of: 1 - ---- --- Gasket 1 - ---- --- Plate
	PLATE and GASKET PACKAGE, WINDSHIELD WIPER MOTOR SWITCH Part No. 2584 979 Consists of: 1 - ---- --- Gasket 1 - ---- --- Plate

★ Indicates use as required.
⊟ Indicates parts not listed in any previous parts book.
* Indicates change or addition.

Printed in U.S.A.
Prices and specifications subject to change without notice.
March 1966.

MyMopar.com

CODE	PART NAME AND PART NUMBER
23-67-164	Cont'd PLATE and GASKET PACKAGE, WINDSHIELD WIPER MOTOR SWITCH .Part No. 2585 044 Consists of: 1 - ---- --- Gasket 1 - ---- --- Plate
24-25-2	PISTON RING PACKAGE . . . . . Part No. 2275 207 Consists of: 1 - ---- --- Ring 1 - 1377 825 Gasket, Oil Sump 1 - 1990 584 Gasket, Cylinder Head 1 - 1990 598 Gasket, Valve Plate
24-25-3	PISTON and CONNECTING ROD PACKAGE . . . . . Part No. 2525 659 Consists of: 1 - ---- --- Piston and Connecting Rod 1 - 1377 825 Gasket, Oil Sump 1 - 1377 904 Gasket, Cylinder Head 1 - 1990 584 Gasket, Cylinder Head 1 - 1378 313 Gasket, Valve Plate 1 - 1990 598 Gasket, Valve Seat 1 - ---- --- Ball, Oil Pressure 1 - ---- --- Spring, Oil Pressure
	PISTON and CONNECTING ROD PACKAGE . . . . . Part No. 2541 330 Consists of: 1 - ---- --- Ball, Oil Pressure 1 - 1990 584 Gasket, Cylinder Head 1 - 1990 598 Gasket, Valve Seat 1 - ---- --- Gasket, Oil Sump 1 - ---- --- Piston and Connecting Rod 1 - ---- --- Spring, Oil Pressure
24-25-70	SEAL PACKAGE, CRANKSHAFT GAS . . . Part No. 1426 501 Consists of: 1 - ---- --- Seal, Crankshaft Gas 1 - 1377 831 Seal, Bearing Housing
24-25-93	VALVE PLATE PACKAGE . . . . . Part No. 2275 204 Consists of: 1 - 1990 584 Gasket, Cylinder Head 1 - 1990 598 Gasket, Valve Plate 1 - ---- --- Plate, Valve
24-25-93	Cont'd VALVE PLATE PACKAGE . . . . . Part No. 2275 205 Consists of: 1 - 1990 584 Gasket, Cylinder Head 1 - 1990 598 Gasket, Valve Plate 1 - ---- --- Plate Valve
24-25-154	CRANKSHAFT PACKAGE. Part No. 2021 190 Consists of: 1 - ---- --- Crankshaft 1 - 1377 825 Gasket, Oil Sump 1 - 1990 584 Gasket, Cylinder Head 1 - 1990 598 Gasket, Valve Plate 1 - 1377 831 Seal, Bearing Housing 1 - ---- --- Seal, Gas 1 - 1747 982 Washer, Thrust
	CRANKSHAFT PACKAGE Part No. 2541 331 Consists of: 1 - ---- --- Crankshaft 1 - 1990 584 Gasket, Cylinder Head 1 - 1990 598 Gasket, Valve Plate 1 - 1377 825 Gasket, Oil Sump 1 - 1377 831 Seal, Bearing Housing 1 - ---- --- Seal, Gas 1 - 1747 982 Washer, Thrust
24-25-162	BEARING HOUSING PACKAGE . . . . . Part No. 2541 332 Consists of: 1 - ---- --- Housing 1 - 1377 831 Seal
	BEARING HOUSING PACKAGE . . . . . Part No. 2196 315 Consists of: 1 - ---- --- Housing 1 - 1377 831 Seal
24-25-246	OIL PUMP PACKAGE . . Part No. 2021 191 Consists of: 1 - ---- --- Cover, Oil Pump 1 - ---- --- Rotor, Outer 1 - ---- --- Rotor, Inner 1 - 1747 988 Seal, Cover 1 - ---- --- Shaft

NOTES

★ Indicates use as required.
B Indicates parts not listed in any previous parts book.
March 1966.

Printed in U.S.A.
Prices and specifications subject to change without notice.
* Indicates change or addition.

MyMopar.com

POLICE

1965 POLICE VEHICLES

BODY TYPES

R1, R2, W1, W2, P1, P2, 2 Door Sedan, 4 Door Sedan, 4 Door Station Wagon — D2 4 Door Sedan

For Parts not listed in Police section refer to 1965 A Series Parts Catalog.

CODE	PART NAME AND DESCRIPTION	CYL	PER CAR	PLYMOUTH BELVEDERE / DODGE CORONET	PLYMOUTH FURY / DODGE POLARA
	GROUP 2 - FRONT SUSPENSION				
2-03-3	KNUCKLE, w/Disc Brakes, Rt.	8	1	---- ---	⊟2462 670
	Lt.	8	1	---- ---	*2462 589
2-10-55	ARM and BALL JOINT PACKAGE, Steering Knuckle Housing Lower, use w/Disc Brakes	8	2	---- ---	2585 332-3
	BOLT, Steering Knuckle Ball Joint Housing Arm, use w/Disc Brakes	8	8	---- ---	6025 734
2-14-3	BAR or SPRING, Torsion, P		1	1857 776-7	2269 576-7
	D	8	1	---- ---	2269 622-3
	Cal., Police Only, D	8	1	---- ---	*2269 578-9

GROUP 3 - AXLE-REAR

NOTE: All 6 Cylinder Police Cars have 8 3/4″ diameter Drive Gear and 1 3/8″ diameter Pinion Stem. Two types of Differential are being used on 8 Cylinder Cars.
With 1 3/8″ diameter Pinion Stem, the Carrier has part number 1820 657 or 2070 741 embossed on it 2″ below the Yoke.
With 1 3/4″ diameter Pinion Stem, the Carrier has part number 1634 985 or 2070 742 embossed on it 2″ below the Yoke.
For Parts Refer to Rear Axle Section of the Parts Catalog.

	GROUP 5 - BRAKE-SERVICE				
5-03-1	LINING PACKAGE, Wheel Brake Shoe		1	---- ---	2495 006
5-03-5	SHOE and LINING, Wheel Brake, Front Wheel, Front Shoe		2	2405 179	
	Front Wheel, Rear Shoe		2	2409 882	
	Rear Wheel, Front Shoe		2	2405 175	
	Rear Wheel, Rear Shoe		2	2409 883	
	Front and Rear Wheel, Front Shoe		4	---- ---	2405 179
	Front and Rear Wheel, Rear Shoe		4	---- ---	2409 882
	Front Wheel w/Disc Brakes, P2, D2	8	4	---- ---	2534 162
	Rear Wheel, Front Shoe w/Front Wheel Disc Brakes, P2, D2	8	2	---- ---	2401 800
	Rear Wheel, Rear Shoe w/Front Wheel Disc Brakes, P2, D2	8	2	---- ---	2401 801
5-13-1	SUPPORT, Front Wheel Brake		2	2265 563	2265 563
	Rear Wheel, Right		1	2405 728	2405 752
	Rear Wheel, Left		1	2405 729	2405 753
5-20-1	SCREW, Wheel Brake, Adjuster		4	2265 201	2265 201
5-20-4	SPRING, Wheel Brake, Adjuster Lock		4	2265 203	2265 203
5-20-15	NUT, Wheel Brake, Adjuster Screw Pivot		4	2260 671	2260 671
5-20-17	SOCKET, Wheel Brake, Adjuster Screw		4	2265 068	2265 068
5-39-1	REPAIR PACKAGE, Master Cylinder, w/Power Brakes, w/Disc Brakes	8	1	---- ---	2585 296

TYPE LETTERS Indicate: V - Valiant, L - Dart, R - Belvedere, W - Coronet, P - Plymouth, D - Dodge, C - Chrysler, Y - Imperial

★Indicates use as required. Numerals in parentheses ( ) refer to notes. Printed in U.S.A.
⊟Indicates parts not listed in any previous parts book. Prices and specifications subject to change without notice.
* Indicates change or addition. May 1965, Supersedes Sept. 4, 1964.

MyMopar.com

CODE	PART NAME AND DESCRIPTION	CYL	PER CAR	PLYMOUTH BELVEDERE / DODGE CORONET	PLYMOUTH FURY / DODGE POLARA
	GROUP 5 - BRAKE-SERVICE - Cont'd				
5-70-1	PISTON, Rear Wheel Cylinder		4	2401 938	
5-71-1	CUP, Rear Wheel Cylinder Piston		4	2072 636	
	GROUP 6 - CLUTCH				
6-13-1	DISC, 10" Clutch, w/225 cu. in. Eng.	6	1	2200 069	2200 069
	10 1/2" Clutch, w/413 cu. in. Eng., D	8	1	---- ---	2266 632
6-14-1	COVER, 10" Clutch, includes Pressure PLATE, w/225 cu. in. Eng.	6	1	2266 235	2266 235
	COVER, 10 1/2" Clutch, w/413 cu. in. Eng., D	8	1	---- ---	2409 688
	GROUP 7 - COOLING				
7-02-16	SPACER, w/Auto. Trans.	6	1	---- ---	2265 037
7-06-1	PULLEY, w/Auto. Trans.	6	1	2202 794	
7-14-4	HOSE, Inlet Upper, w/Auto. Trans.	6	1	2406 713	2468 336
	GROUP 8 - ELECTRICAL				
8-27-1	DISTRIBUTOR, Assembly, w/1-4 Barrel Carburetor, w/383 cu. in. Eng., Double Breaker	8	1	2444 360	2444 360
	w/2 Barrel Carburetor, w/383 cu. in. Eng., Single Breaker, P	8	1	---- ---	2444 700
8-33-4	RING, Horn, Full, P		1	---- ---	2530 268
8-35-111	CYLINDER PACKAGE, Ignition and Door Lock, 2 D. and 4 D., P		1	*2162 503	2520 825
	Ignition, Door and Manual Tailgate Lock, Sta. Wgn., P		1	2241 871	2520 826
	Ignition, Door and Electric Tailgate Lock, Sta. Wgn.		1	2427 116	⊟2520 827
8-36-114	PLUG, Spark, Champion J-14Y, w/2 Barrel Carburetor, R, W, w/318 and 361 cu. in. Eng., P w/383 cu. in. Eng.	8	8	2444 870	2444 870
	Champion J-10Y, w/1-4 Barrel Carburetor, R, W, w/383 cu. in. Eng., P w/383 and 426 cu. in. Eng., D	8	8	2098 337	2098 337
8-37-372	SPEEDOMETER, Mile, R		1	2496 708	
	W, P		1	2496 630	2496 445
	D	8	1	---- ---	2496 080
8-52-8	SHIELD, Trans. Case to Starter Motor, w/Auto. Trans.	6	1	*2125 014	*2125 014
	GROUP 9 - ENGINE				
9-45-2	GEAR, Torque Converter Ring	6	1	1941 648	1941 648
9-46-4	TORQUE CONVERTER	6	1	2125 090	2125 090
9-46-8	PLATE, Torque Converter Drive	6	1	2204 719	2204 719
9-46-50	SHIELD, Transmission Torque Converter	6	1	2466 829	2466 829
9-46-61	ADAPTER, Torque Converter Drive Plate	6	1	2202 472	2202 472
9-46-130	SEAL, Transmission Torque Converter Impeller Hub	6	1	1942 020	1942 020
9-64-24	BRACKET, Engine Front Support Insulator, Left, P1	6	1	---- ---	2468 297
9-67-4	INSULATOR, Engine Front Support, Right, w/Auto. Trans., R1, W1	6	1	2406 672	
	Left, w/Auto. Trans., R1, W1	6	1	2406 674	
	Right, w/Auto. Trans., P1	6	1	---- ---	2468 341

TYPE LETTERS Indicate: V - Valiant, L - Dart, R - Belvedere, W - Coronet, P - Plymouth, D - Dodge, C - Chrysler, Y - Imperial

★Indicates use as required. Numerals in parentheses ( ) refer to notes. Printed in U.S.A.

⊟Indicates parts not listed in any previous parts book. Prices and specifications subject to change without notice.

MyMopar.com

CODE	PART NAME AND DESCRIPTION	CYL	PER CAR	PLYMOUTH BELVEDERE / DODGE CORONET	PLYMOUTH FURY / DODGE POLARA
	GROUP 10 - ENGINE OILING				
10-07-6	PUMP, Oil	6	1	2463 382	2463 382
10-24-4	PAN, Oil	6	1	2406 688	2468 413
10-26-6	FILTER, Oil, Replaceable Cartridge Type, includes CARTRIDGE	6	1	2128 548	2128 548
10-26-8	CARTRIDGE	6	1	2129 023	2129 023
	GROUP 11 - EXHAUST				
11-01-1	MUFFLER, Aluminized	6	1	2409 126	2534 430
	Zinc Coated	6	1	2298 913	2534 440
11-02-1	CLAMP PACKAGE, Muffler to Exhaust Pipe	6	1	1843 010	1843 008
	Exhaust Pipe Brace	6	1	1843 010	1843 008
11-05-1	PIPE, Exhaust, w/Manual Trans., 2 D. and 4 D.	6	1	*2534 445	2461 590
	w/Manual Trans., Sta. Wgn.	6	1	*2534 445	2460 798
	w/Auto. Trans., 2 D. and 4 D.	6	1	*2409 148	2530 072
	w/Auto. Trans., Sta. Wgn.	6	1	*2409 148	2530 766
11-08-5	BRACE, Exhaust Pipe, w/Manual Trans.	6	1	2534 448	
	w/Auto. Trans.	6	1	2409 155	
		6	1	---- ---	2530 790
11-09-3	PIPE, Tail, 2 D. and 4 D.	6	1	2404 921	2530 061
	Sta. Wgn.	6	1	2203 579	2461 599
	GROUP 13 - FRAME				
13-01-0	**FRAME ASSEMBLY**				
13-01-1	FRAME, 4D., Cal., Police Only, D	8	1	---- ---	*2461 885
13-54-15	HANGER, Rear, 4 D., Cal., Police Only, D	8	1	---- ---	2462 058-9
	GROUP 16 - PROPELLER SHAFT AND UNIVERSAL JOINT				
16-02-1	PROPELLER SHAFT,				
	R1 R2 All, W1 W2 Sta.Wgn., w/225, 273 cu. in. Eng., 3 Speed Trans., includes U/JOINTS		1	2405 631	
	W1 W2 P1 except Sta.Wgn., w/225, 273 cu. in. Eng., 3 Speed Trans., includes U/JOINTS		1	2530 850	2530 850
	R1 R2 All, W1 W2 Sta.Wgn., W225, 273 cu. in. Eng., Auto Trans., includes U/JOINTS		1	2533 143	
	R2 All, W2 Sta.Wgn., w/318, 361, 383 cu. in. Eng., 3 Speed Auto. Trans., includes U/JOINTS	8	1	2405 634	
	R2 All, W2 Sta.Wgn., w/318, 361, 383 cu. in. Eng., Auto. Trans., includes U/JOINTS	8	1	2533 143	
	W1, W2 except Sta. Wgn., w/225, 273 cu. in. Eng., Auto. Trans., includes U/JOINTS		1	2533 144	
	W2 except Sta.Wgn., w/318, 361, 383 cu. in. Eng., 3 Speed Trans., includes U/JOINTS		1	2530 862	
	P1 Sta.Wgn., w/225 cu. in. Eng., 3 Speed Trans., includes U/JOINTS	6	1	---- ---	2405 644
	P1 except Sta.Wgn., w/225 cu. in. Eng., Auto. Trans., includes U/JOINTS	6	1	2533 134	
	P1 Sta.Wgn., w/225 cu. in. Eng., Auto. Trans., includes U/JOINTS	6	1	2660 588	
	D2, California Police, w/383, 413 cu. in. Eng. includes U/JOINTS	8	1	---- ---	*2533 213

TYPE LETTERS Indicate: V - Valiant, L - Dart, R - Belvedere, W - Coronet, P - Plymouth, D - Dodge, C - Chrysler, Y - Imperial

★Indicates use as required. Numerals in parentheses ( ) refer to notes. Printed in U.S.A.

⊟Indicates parts not listed in any previous parts book. Prices and specifications subject to change without notice.

* Indicates change or addition.

March 1966 Supersedes May 1965.

MyMopar.com

CODE	PART NAME AND DESCRIPTION	CYL	PER CAR	PLYMOUTH BELVEDERE / DODGE CORONET	PLYMOUTH FURY / DODGE POLARA
	GROUP 17 - REAR SPRING				
17-11-3	SPRING, except Sta.Wgn.	6	2	2585 252	
	Except Sta.Wgn.	8	2	2525 095	
	Sta.Wgn., Right		1	2585 254	
	Sta. Wgn., Left		1	2585 235	
	Except Sta.Wgn., P		2	---- ---	2585 231
	Except Sta. Wgn., D	8	2	---- ---	⊟2585 399
	Sta.Wgn.		1	---- ---	2585 226-7
17-16-1	SHACKLE and BUSHING PACKAGE, 4 D., Cal., Police Only, D	8	2	---- ---	*2525 469
17-17-3	BUSHING, Front Pivot, 4 D., Cal., Police Only, D	8	2	---- ---	*2403 245
17-19-3	BUMPER, Axle Drive Pinion Carrier, 4 D., Cal., Police Only, D	8	2	---- ---	⊟2539 096
17-19-6	NUT, Axle Drive Pinion Carrier Retainer, 4 D., Cal., Police Only, D	8	1	---- ---	*1943 997
17-19-20	SUPPORT, Pinion Carrier Bumper, 4 D., Cal., Police Only, D	8	1	---- ---	*1948 351
17-23-3	ABRORBER PACKAGE, Front Shock		2	2275 883	2525 461
	Rear 1" Dia.		2	2275 849	2525 432
	Rear 1 3/8" Dia.		2	2275 848	2525 444
	GROUP 19 - STEERING				
19-54-91	STRAP, Power Steering Pump Bracket to Water Pump Body	6	1	2268 766	
19-54-115	BRACKET, Power Steering Pump Engine, w/Auto. Trans.	6	1	2468 011	
19-54-123	BOLT, Power Steering Pump Engine Bracket Swivel, w/Auto. Trans.	6	1	2202 850	
	SCREW, w/WASHER, Power Steering Pump Bracket Adjusting, w/Auto. Trans.	6	2	1945 404	

GROUP 21 - TRANSMISSION

MANUAL TRANSMISSION

NOTE: For Parts not listed below refer to Manual Transmission Chart 2464 094 in Group 21, in Parts Catalog.

21-02-1	TRANSMISSION	6	1	2464 094	2464 094
21-30-428	SWIVEL, Interlock	6	1	2404 859	2404 859
21-30-429	CLAMP, Interlock	6	1	2204 274	2204 274
21-42-23	LEVER, Operating, Low and Reverse	6	1	2464 380	2466 749
	Second and Direct	6	1	2208 160	2208 160
	LEVER, Interlock, Low and Reverse	6	1	2400 716	2400 716
	CLIP, Interlock Lever	6	2	6025 071	6025 071
21-42-25	WASHER, Interlock Lever Spring	6	1	6025 071	6025 071
21-42-28	PIN, Low and Reverse Interlock Pivot	6	1	2400 568	2400 568
21-42-29	PAWL, Low and Reverse Interlock Lever	6	1	2400 715	2400 715

TYPE LETTERS Indicate: V - Valiant, L - Dart, R - Belvedere, W - Coronet, P - Plymouth, D - Dodge, C - Chrysler, Y - Imperial

★Indicates use as required. Numerals in parentheses ( ) refer to notes. Printed in U.S.A.

⊟Indicates parts not listed in any previous parts book. Prices and specifications subject to change without notice.

May 1965, Supersedes Sept. 4, 1964. * Indicates change or addition.

MyMopar.com

GROUP 21 - TRANSMISSION - Cont'd

AUTOMATIC 3-SPEED TRANSMISSION

NOTE: For parts not listed below refer to Automatic Transmission charts in Group 21, in Parts Catalog.

CODE	PART NAME AND DESCRIPTION	CYL	PER CAR	PLYMOUTH BELVEDERE / DODGE CORONET	PLYMOUTH FURY / DODGE POLARA
21-02-1	TRANSMISSION (see chart 2466 134)	6	1	*2466 134(1)	*2466 134(1)
	(see chart 2466 152)	6	1	*2466 152(2)	*2466 152(2)
	w/318 cu. in. Engine (see chart 2466 134)	8	1	*2466 134(1)	*2466 134(1)
	w/318 cu. in. Engine (see chart 2466 152)	8	1	*2466 152(2)	*2466 152(2)
	w/273 cu. in. Engine (see chart 2466 135)	8	1	*2466 135(1)	
	w/273 cu. in. Engine (see chart 2466 151)	8	1	*2466 151(2)	
	w/383 cu. in. Engine, w/4 Barrel Carburetor (see chart 2466 113)	8	1	*2466 113(1)	*2466 113(1)
	w/383 cu. in. Engine, w/4 Barrel Carburetor (see chart 2466 148)	8	1	*2466 148(2)	*2466 148(2)
21-03-2	PLATE, Adapter	6	1	2125 013	2125 013
21-03-6	COVER, Case Torque Converter	6	1	2125 057	2125 057
21-03-7	COVER, Torque Converter Drain	6	1	2466 830	2466 830
21-03-23	SCREW, Adapter Plate to Case	6	3	6024 863	6024 863
	Case to Adapter Plate	6	4	6023 187	6023 187
21-03-29	SHIELD, Case to Starter Motor, P	6	1	*2125 014	*2125 014
21-03-40	PIN, Adapter Plate Dowel	6	2	1533 923	1533 923
21-119-15	TUBE, Oil Filter, w/A727A Trans.	6	1	2204 788	
	P, w/A727A Trans.	6	1	---- ---	2466 298

GROUP 22 - WHEELS

CODE	PART NAME AND DESCRIPTION	CYL	PER CAR	PLYMOUTH BELVEDERE / DODGE CORONET	PLYMOUTH FURY / DODGE POLARA
22-01-5	WHEEL, 15 x 5.50		5	2409 855	
	15 x 6.00		5	---- ---	2200 928
22-01-42	COVER, Wheel, 15" Wheel		4	---- ---	2260 160
22-03-1	HUB and Brake DRUM, Front, 11" x 3" Brakes, Right		1	*2266 390	
	Left		1	2266 391	
	Front, 11" x 3" Brakes, Right		1	---- ---	2530 126
	Left		1	---- ---	2530 127
	HUB and Brake DISC, Front, P2, D2, Right	8	1	---- ---	⊟2534 144
	Left	8	1	---- ---	⊟2534 145
22-04-2	DRUM, Rear, 11" x 2 1/2" Brakes		2	2405 798	
	Rear, 11" x 2 1/2" Brakes, w/Disc Brakes		2	---- ---	*2533 824
	Rear, 11" x 3" Brakes, except Disc Brakes		2	---- ---	2405 758
22-04-11	SPRING, Front Wheel Brake Drum Dampener, 11" x 3" Brakes		2	2266 877	
	11" x 2 1/2" Brakes, Rear		2	2266 877	
	11" x 2 1/2" Brakes, Rear, w/Disc Brakes on Front	8	2	---- ---	1142 259
	11" x 3" Brakes, Rear, except w/Disc Brakes on Front		2	---- ---	2266 877
22-05-14	STUD, Front Wheel, 11" x 3" Brakes, Right		5	2405 144	2405 144
	Left		5	2405 145	2405 145

NOTE 1: UP TO Trans. Ser. No. 1589110.
NOTE 2: AFTER Trans. Ser. No. 1589110.

TYPE LETTERS Indicate: V - Valiant, L - Dart, R - Belvedere, W - Coronet, P - Plymouth, D - Dodge, C - Chrysler, Y - Imperial

★Indicates use as required. Numerals in parentheses ( ) refer to notes. Printed in U.S.A.
⊟Indicates parts not listed in any previous parts book. Prices and specifications subject to change without notice.
• Indicates change or addition.

May 1965, Supersedes Sept. 4, 1964.
MyMopar.com

TAXI

1965 TAXI VEHICLES

BODY TYPES

R1, R2, W1, W2, P1, P2
4 Door Sedan

CODE	PART NAME AND DESCRIPTION	CYL	PER CAR	PLYMOUTH BELVEDERE / DODGE CORONET	PLYMOUTH FURY / DODGE POLARA
	GROUP 2 - FRONT SUSPENSION				
2-14-3	BAR or SPRING, Torsion		1	1857 776-7	⊟2269 576-7
	GROUP 3 - AXLE-REAR				
	NOTE: All 6 Cylinder Taxis have 8 3/4″ diameter Drive Gear and 1 3/8″ diameter Pinion Stem. Refer to Rear Axle Section of the Parts Catalog.				
	GROUP 4 - BRAKE-PARKING				
4-10-8	SHAFT, Operating Lever		1	1942 163	1942 163
4-26-1	LEVER, w/PIN		1	2260 800-1	
4-26-17	STRUT, Lever		1	⊟2533 892-3	
	GROUP 5 - BRAKE-SERVICE				
5-03-1	LINING PACKAGE, Wheel Brake Shoe, P1, P2		1	---- ---	⊟2525 462
5-03-5	SHOE and LINING, Wheel Brake Front Wheel, Front Shoe		2	2401 806	
	Front Wheel, Rear Shoe		2	2401 807	
	Rear Wheel, Front Shoe		2	2401 800	
	Rear Wheel, Rear Shoe		2	2401 801	
	Front and Rear Wheel, Front Shoe, P1, P2		4	---- ---	2401 806
	Front and Rear Wheel, Rear Shoe P1, P2		4	---- ---	2401 807
5-03-6	SHOE, Wheel Brake, Front		4	2260 654	2260 654
	Rear		4	2260 886	2260 886
5-03-23	SPRING, Brake Shoe Return, Front and Rear Wheel		8	2260 789	2260 789
5-13-1	SUPPORT, Front Wheel Brake		2	2265 563	2265 563
	Rear Wheel, Right		1	⊟2405 728	⊟2405 752
	Rear Wheel, Left		1	⊟2405 729	⊟2405 753
	GROUP 6 - CLUTCH				
6-9-1	HOUSING, Clutch w/225 cu. in. Eng., 11″ Clutch 3 Speed Trans.	6	1	⊟2468 225	⊟2468 225
6-10-2	PAN, w/225 cu. in. Eng., 11″ Clutch, 3 Speed Trans.	6	1	⊟2468 810	⊟2468 810
6-13-1	DISC, 11″ Clutch, w/225 cu. in. Eng.	6	1	2409 683	2409 683
6-13-4	FACING, Clutch Disc, 11″ Clutch w/225 cu. in. Eng., 3 Speed Trans.	6	2	2409 685	2409 685
6-14-1	COVER, 11″ Clutch, includes Pressure PLATE, w/225 cu. in. Eng., 3 Speed Trans.	6	1	2409 682	2409 682

TYPE LETTERS Indicate: V - Valiant, L - Dart, R - Belvedere, W - Coronet, P - Plymouth, D - Dodge, C - Chrysler, Y - Imperial

★Indicates use as required. Numerals in parentheses ( ) refer to notes. Printed in U.S.A.
⊟Indicates parts not listed in any previous parts book. Prices and specifications subject to change without notice.

MyMopar.com

CODE	PART NAME AND DESCRIPTION	CYL	PER CAR	PLYMOUTH BELVEDERE / DODGE CORONET	PLYMOUTH FURY / DODGE POLARA
	GROUP 6 - CLUTCH - Cont'd				
6-19-2	BEARING, 11" Clutch, w/225 cu. in. Eng., 3 Speed Trans.	6	1	2461 494	2461 494
6-59-1	SHAFT, Torque, includes PIN, 11" Clutch, w/225 cu. in. Eng., 3 Speed Trans.	6	1	---- ---	2467 741
	GROUP 7 - COOLING				
7-02-16	SPACER, w/Auto. Trans.	6	1	---- ---	2265 037
7-03-1	BELT, Engine to Steering Pump	6	1	1821 684	
7-06-1	PULLEY, w/Auto. Trans.	6	1	2202 794	
7-14-4	HOSE, Inlet Upper, w/Auto. Trans.	6	1	2406 713	⊟2468 336
	GROUP 8 - ELECTRICAL				
8-33-23	SPACER, Horn Button Ornament, P		1	2409 002	2409 002
8-33-90	SWITCH, R-L 4 D., W-L 2 D. and 4 D., P-L 4 D		1	*2076 543	*2076 543
8-35-111	CYLINDER PACKAGE, Ignition and Door Lock		1	*2162 503	2520 825
8-52-8	SHIELD, Trans. Core to Starter Motor w/Auto. Trans.	6	1	⊟2125 014	⊟2125 014
	GROUP 9 - ENGINE				
9-10-5	CAP, Crankshaft Bearing No. 3	8	1	2463 582	
9-45-1	FLYWHEEL, w/Ring GEAR	6	1	2463 843	2463 843
9-45-2	GEAR, Flywheel Ring	6	1	1673 646	1673 646
	GEAR, Torque Converter Ring	6	1	1941 648	1941 648
9-46-4	TORQUE CONVERTER	6	1	2125 090	2125 090
9-46-8	PLATE, Torque Converter Drive	6	1	2204 719	2204 719
9-46-50	SHIELD, Transmission Torque Converter	6	1	2466 829	2466 829
9-46-61	ADAPTER, Torque Converter Drive Plate	6	1	2202 472	2202 472
9-46-130	SEAL, Transmission Torque Converter Impeller Hub	6	1	1942 020	1942 020
9-64-24	BRACKET, Engine Front Support Insulator, Left, P1	6	1	---- ---	2468 297
9-67-4	INSULATOR, Engine Front Support, Right, w/Auto. Trans., R1, W1	6	1	2406 672	
	Left, w/Auto. Trans., R1, W1	6	1	2406 674	
	Right, w/Auto. Trans., P1	6	1	---- ---	2468 341

TYPE LETTERS Indicate: V - Valiant, L - Dart, R - Belvedere, W - Coronet, P - Plymouth, D - Dodge, C - Chrysler, Y - Imperial

★Indicates use as required. Numerals in parentheses ( ) refer to notes. Printed in U.S.A.
⊟Indicates parts not listed in any previous parts book. Prices and specifications subject to change without notice.
* Indicates change or addition.

MyMopar.com

May 1965, Supersedes Sept. 4, 1964.

CODE	PART NAME AND DESCRIPTION	CYL	PER CAR	PLYMOUTH BELVEDERE / DODGE CORONET	PLYMOUTH FURY / DODGE POLARA
	GROUP 10 - ENGINE OILING				
10-07-6	PUMP, Oil	6	1	2463 382	2463 382
10-24-4	PAN, Oil	6	1	2406 688	2468 413
10-26-6	FILTER, Oil, Replaceable Cartridge Type, Includes CARTRIDGE	6	1	2128 548	2128 548
10-26-8	CARTRIDGE	6	1	2129 023	2129 023
	GROUP 11 - EXHAUST				
11-01-1	MUFFLER, Aluminized	6	1	2409 126	2534 430
	Zinc Coated	6	1	2298 913	2534 440
11-02-1	CLAMP PACKAGE, Muffler to Exhaust Pipe	6	1	1843 010	1843 008
	Exhaust Pipe Brace	6	1	1843 010	1843 008
11-05-1	PIPE, Exhaust, w/Manual Trans.	6	1	*2534 445	2461 590
	w/Auto. Trans.	6	1	*2409 148	2530 072
11-08-5	BRACE, Exhaust Pipe, w/Manual Trans.	6	1	2534 448	
	w/Auto. Trans.	6	1	2409 155	
		6	1	---- ---	2530 790
11-09-3	PIPE, Tail	6	1	2404 921	2530 061
	GROUP 16 - PROPELLER SHAFT AND UNIVERSAL JOINT				
16-02-1	PROPELLER SHAFT				
	R1,R2,225, 273 cu.in. Eng., 3 Speed Trans., includes U/JOINTS		1	2405 631	2405 631
	W1,W2, 3 Speed Trans., 225, 273 cu.in. Eng., includes U/JOINTS		1	2530 850	
	R1,R2,w/225, 273 cu.in.Eng., Auto Trans., includes U/JOINTS		1	2533 143	
	W1,W2, 225, 273 cu.in. Eng., Auto. Trans., includes U/JOINTS		1	2533 144	
	P1, 225 cu.in.Eng., 3 Speed Trans., includes U/JOINTS		1	---- ---	2530 850
	P1, 225 cu.in.Eng., Auto. Trans.		1	---- ---	2533 134
	GROUP 17 - REAR SPRING				
17-11-3	SPRING, except Sta.Wgn.	6	2	2585 252	
	Except Sta. Wgn.	8	2	2525 095	
	Sta. Wgn., Right		1	2585 254	
	Sta. Wgn., Left		1	2585 235	
	Except Sta.Wgn.		2	---- ---	2585 231
	Sta.Wgn.		1	---- ---	2585 226-7
17-23-3	ABSORBER PACKAGE, Front Shock		2	2275 883	2525 461
	Rear 1" dia.		2	2275 849	2525 432
	Rear 1 3/8" dia.		2	2275 848	2525 444
	GROUP 19 - STEERING				
19-54-91	STRAP, Power Steering Pump Bracket to Water Pump Body	6	1	2268 766	
19-54-115	BRACKET, Power Steering Pump Engine, w/Auto. Trans.	6	1	2468 011	
19-54-123	BOLT, Power Steering Pump Engine Bracket Swivel, w/Auto. Trans.	6	1	2202 850	
	SCREW, w/WASHER, Power Steering Pump Bracket Adjusting, w/Auto. Trans.	6	2	1945 404	

TYPE LETTERS Indicate: V - Valiant, L - Dart, R - Belvedere, W - Coronet, P - Plymouth, D - Dodge, C - Chrysler, Y - Imperial

★Indicates use as required. Numerals in parentheses ( ) refer to notes. Printed in U.S.A.

⊟Indicates parts not listed in any previous parts book. Prices and specifications subject to change without notice.

March 1966 Supersedes May 1965. * Indicates change or addition.

MyMopar.com

CODE	PART NAME AND DESCRIPTION	CYL	PER CAR	PLYMOUTH BELVEDERE / DODGE CORONET	PLYMOUTH FURY / DODGE POLARA
	GROUP 21 - TRANSMISSION				
	MANUAL TRANSMISSION				
	NOTE: For Parts not listed below refer to Manual Transmission Chart 2464 094 in Group 21, in Parts Catalog.				
21-02-1	TRANSMISSION	6	1	2464 094	2464 094
21-30-428	SWIVEL, Interlock	6	1	2404 859	2404 859
21-30-429	CLAMP, Interlock	6	1	2204 274	2204 274
21-42-23	LEVER, Operating, Low and Reverse	6	1	2464 380	2466 749
	Second and Direct	6	1	2208 160	2208 160
21-42-28	PIN, Low and Reverse Interlock Pivot	6	1	2400 568	2400 568
21-42-29	PAWL, Low and Reverse Interlock Lever	6	1	2400 715	2400 715
	AUTOMATIC 3-SPEED TRANSMISSION				
	NOTE: For Parts not listed below refer to Automatic Transmission Charts in Group 21, in Parts Catalog.				
21-02-1	TRANSMISSION (see chart 2466 134)	6	1	*2466 134(1)	*2466 134(1)
	(see chart 2466 152)	6	1	⊟2466 152(2)	⊟2466 152(2)
	w/273 cu. in. Eng. (see chart 2466 135)	8	1	*2466 135(1)	
	w/273 cu. in. Eng. (see chart 2466 151)	8	1	⊟2466 151(2)	
	w/318 cu. in. Eng. (see chart 2466 134)	8	1	---- ---	*2466 134(1)
	w/318 cu. in. Eng. (see chart 2466 152)	8	1	---- ---	⊟2466 152(2)
21-03-2	PLATE, Transmission Case Adapter	6	1	2125 013	2125 013
21-03-6	COVER, Case Torque Converter	6	1	2125 057	2125 057
21-03-7	COVER, Torque Converter Drain	6	1	2466 830	2466 830
21-03-23	SCREW, Case to Adapter Plate	6	4	6023 187	6023 187
	Adapter Plate to Case	6	3	6024 863	6024 863
21-03-29	SHIELD, Case to Starter Motor, P	6	1	*2125 014	*2125 014
21-03-40	PIN, Adapter Plate Dowel	6	2	1533 923	1533 923
21-142-12	LEVER, Throttle Control	6	1	2264 744	2264 744
	w/273 cu. in. Engine	8	1	2532 351	
	GROUP 22 - WHEELS				
22-01-5	WHEEL, 15 x 5.50		5	2409 855	
	15 x 6.00		5	---- ---	2200 928
22-01-42	COVER, Wheel, 15" Wheel		4	---- ---	2260 160
	NOTE 1: UP TO Trans. Ser. No. 1589110.				
	NOTE 2: AFTER Trans. Ser. No. 1589110.				

TYPE LETTERS Indicate: V - Valiant, L - Dart, R - Belvedere, W - Coronet, P - Plymouth, D - Dodge, C - Chrysler, Y - Imperial

★Indicates use as required. Numerals in parentheses ( ) refer to notes. Printed in U.S.A.

⊟Indicates parts not listed in any previous parts book. Prices and specifications subject to change without notice.

* Indicates change or addition. May 1965, Supersedes Sept. 4, 1964.

MyMopar.com

CODE	PART NAME AND DESCRIPTION	CYL	PER CAR	PLYMOUTH BELVEDERE / DODGE CORONET	PLYMOUTH FURY / DODGE POLARA
	GROUP 22 - WHEELS - Cont'd				
22-03-1	HUB and BRAKE DRUM, Front, 11" x 3" Brakes, Right		1	2266 390	
	Left		1	2266 391	
	Front, 11" x 3" Brakes, Right		1	---- ---	2530 126
	Left		1	---- ---	2530 127
22-04-2	DRUM, Rear, 11" x 2 1/2" Brakes		2	2405 798	
	Rear, 11" x 3" Brakes		2	---- ---	2405 758
22-04-11	SPRING, Front Wheel Brake Drum Dampener, 11" x 3" Brake		2	2266 877	
	11" x 2 1/2" Brakes, Rear		2	2266 877	
	11" x 3" Brakes, Rear		2	---- ---	2266 877
22-05-14	STUD, Front Wheel, 11" x 3" Brakes, Right		5	2405 144	2405 144
	Left		5	2405 145	2405 145

NOTES

TYPE LETTERS Indicate: V - Valiant, L - Dart, R - Belvedere, W - Coronet, P - Plymouth, D - Dodge, C - Chrysler, Y - Imperial

★Indicates use as required. Numerals in parentheses ( ) refer to notes. Printed in U.S.A.

⊟Indicates parts not listed in any previous parts book. Prices and specifications subject to change without notice.

May 1965, Supersedes Sept. 4, 1964. * Indicates change or addition.

MyMopar.com

GROUP 1 - ACCESSORIES

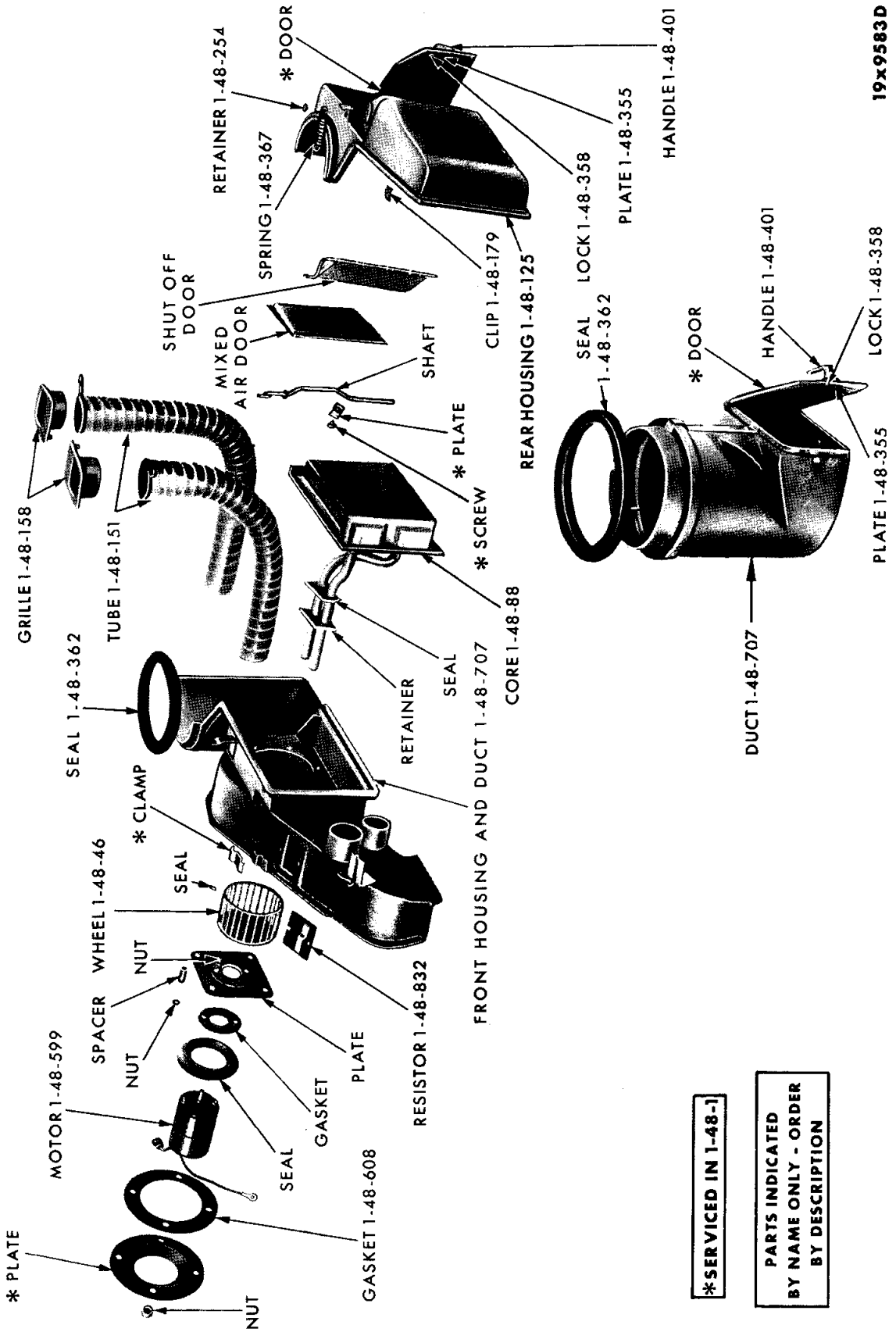

HEATER ASSEMBLY - VALIANT AND DART

MyMopar.com

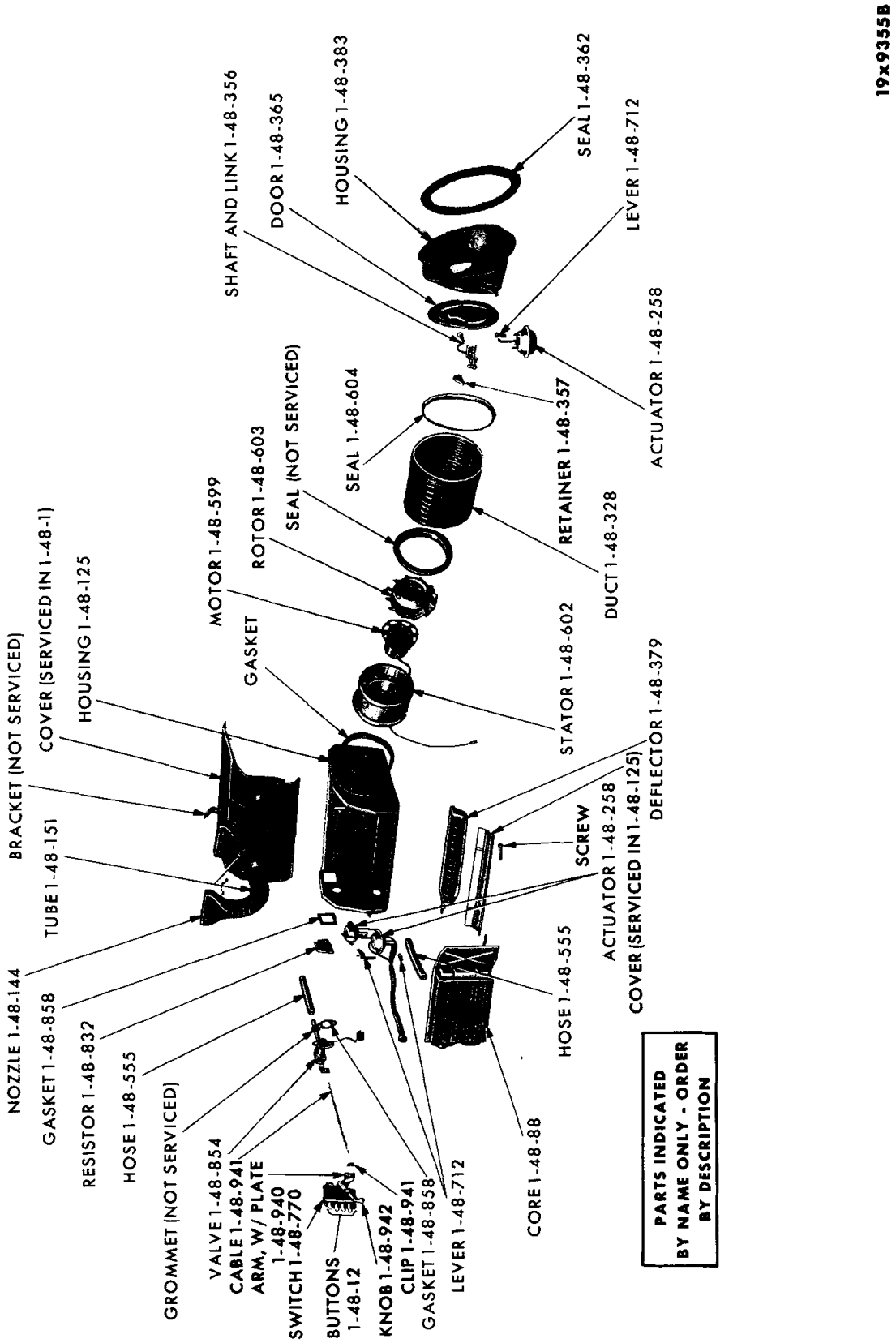

HEATER ASSEMBLY - BELVEDERE AND CORONET

MyMopar.com

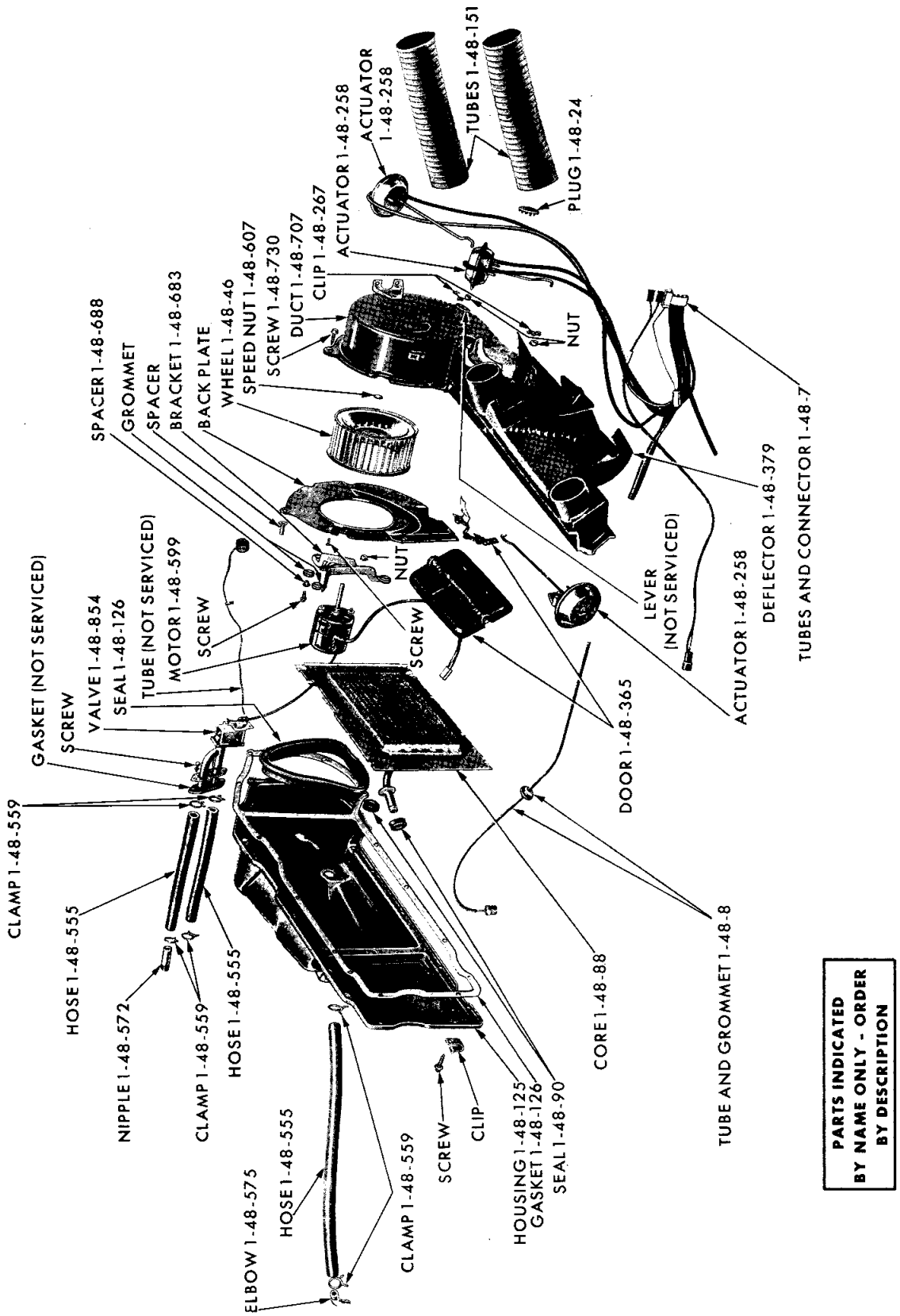

HEATER ASSEMBLY - IMPERIAL

MyMopar.com

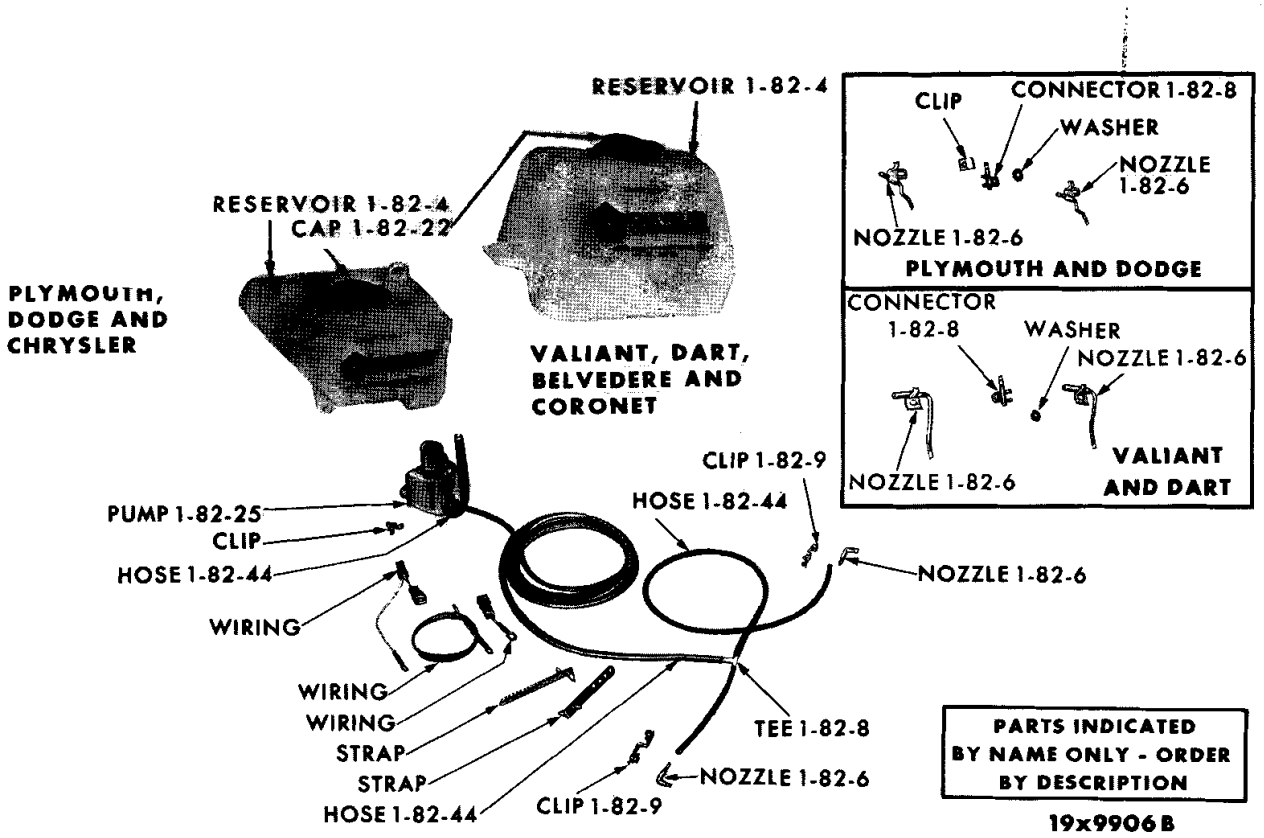

WINDSHIELD WASHER SYSTEM

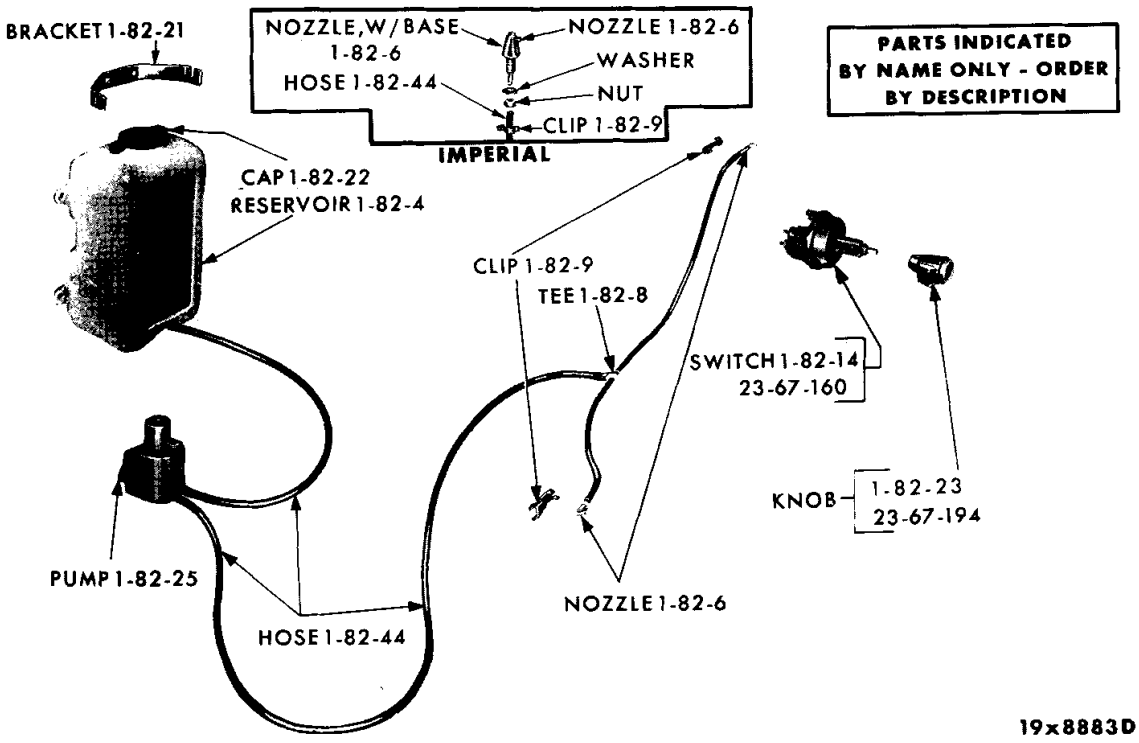

ELECTRIC WINDSHIELD WASHER SYSTEM (FACTORY INSTALLED) - IMPERIAL

MyMopar.com

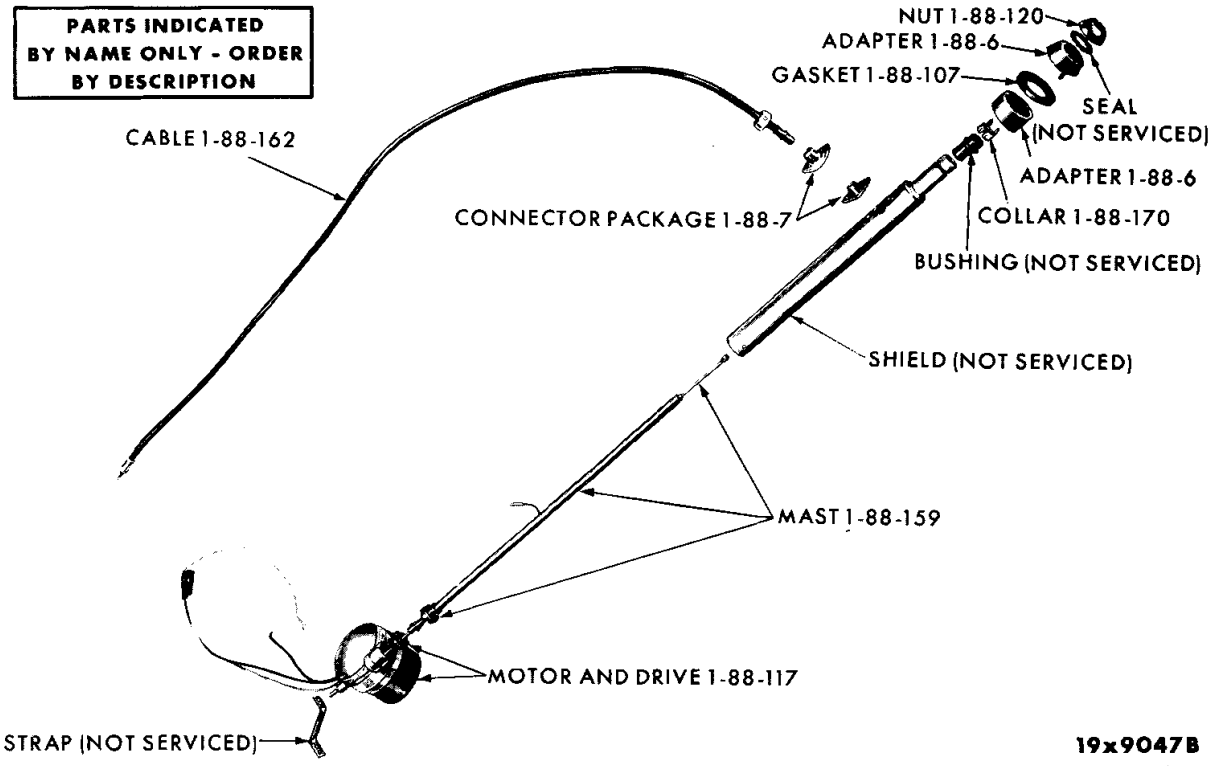

POWER ANTENNA - CHRYSLER AND IMPERIAL

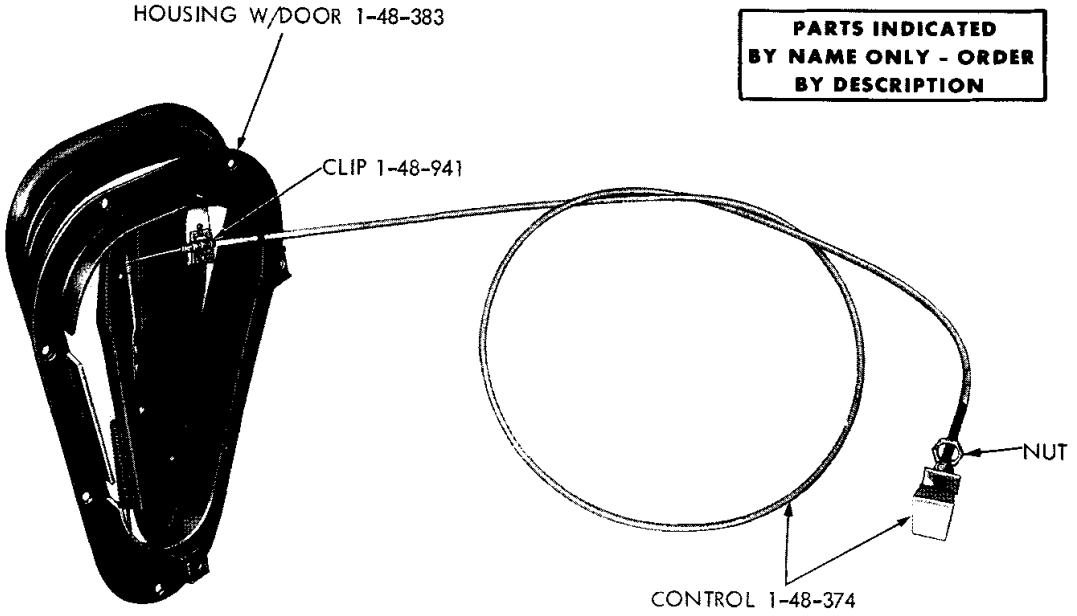

FRESH AIR DOOR AND CONTROLS - PLYMOUTH, DODGE AND CHRYSLER

MyMopar.com

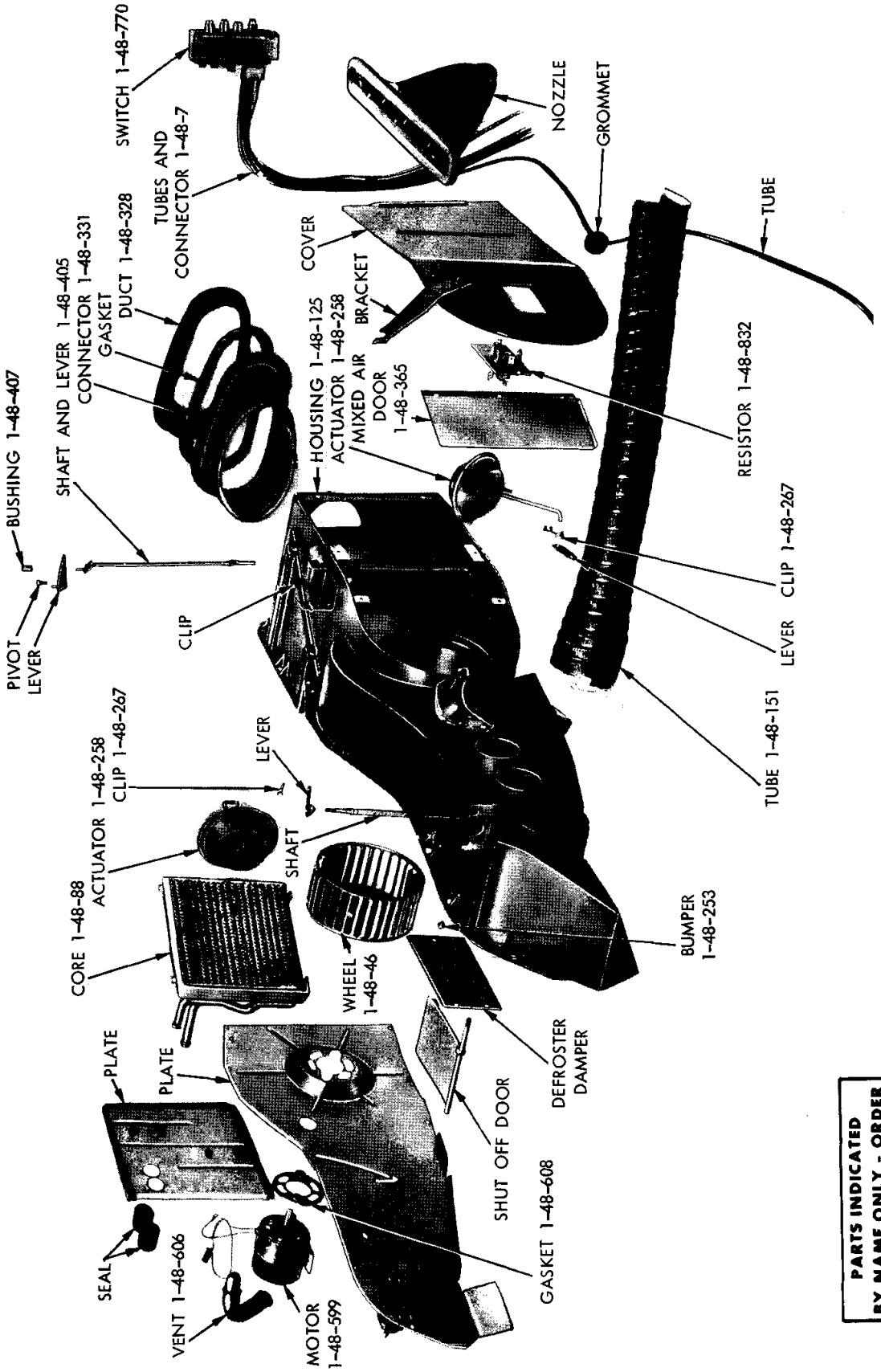

HEATER ASSEMBLY - PLYMOUTH (MODEL 735), DODGE (MODEL 736) AND CHRYSLER (MODEL 737)

MyMopar.com

CODE	PART NAME AND DESCRIPTION	CYL	PER CAR	VALIANT / DART	PLYMOUTH BELVEDERE / DODGE CORONET	PLYMOUTH FURY / DODGE POLARA / CHRYSLER	IMPERIAL
1-04-0	**AUTOMATIC HEADLAMP DIMMER**						
1-04-4	SCANNER		1	---- ---	---- ---	---- ---	2257 169
1-04-6	BASE, Scanner		1	---- ---	---- ---	---- ---	2096 899
1-04-7	SPACER, Scanner Base Mounting		1	---- ---	---- ---	---- ---	2427 659
1-04-8	SCREW, Scanner Mounting		1	---- ---	---- ---	---- ---	892 569
1-04-12	AMPLIFIER		1	---- ---	---- ---	---- ---	2257 182
1-04-18	ADAPTER, Amplifier Terminal		3	---- ---	---- ---	---- ---	2096 872
1-06-0	**EMERGENCY FLASHER LIGHT**						
1-06-2	FLASHER UNIT		1	2290 360	2290 360	2290 360	2290 360
	FLASHER, Tail Signal, Heavy Duty		1	2196 300	2196 300	2196 300	
1-06-3	SWITCH		1	2291 741	2291 741	2291 741	2291 741
1-06-4	KNOB, Switch		1	1972 137	1972 137	1972 137	1972 137
1-09-0	**PARKING BRAKE INDICATOR LAMP**						
1-09-1	LAMP PACKAGE, Parking Brake Indicator, C1, C2	8	1	2291 664	2291 664	2580 902	
	D	8	1	---- ---	---- ---	2580 901	
	P		1	---- ---	---- ---	2580 900	
1-10-0	**BACK-UP LAMP**						
1-10-1	LAMP PACKAGE, w/Manual Trans., 2 D. and 4 D., R		1	---- ---	*2587 608		
	w/Auto. Trans., 2 D. and 4 D., R		1	---- ---	2587 609		
	w/Manual Trans., 2 D. and 4 D., P		1	---- ---	---- ---	2587 606	
	w/Manual Trans., Sta. Wgn., P1, P2, D2, C1		1	---- ---	---- ---	2587 605	
	w/Auto. Trans., Sta. Wgn., P1, P2, D2, C1		1	---- ---	---- ---	2587 604	
	w/Manual Trans., except Sta. Wgn., D2	8	1	---- ---	---- ---	2587 603	
	w/Manual Trans., except Sta. Wgn., C1, C2	8	1	---- ---	---- --	2587 601	
	w/Auto. Trans., except Sta. Wgn., C1, C2	8	1	---- ---	---- ---	2587 600	
1-12-0	**CIGAR LIGHTER**						
1-12-1	CIGAR LIGHTER PACKAGE, Instrument Panel, V		1	2587 506			
1-13-0	**UNDERHOOD LIGHT**						
1-13-10	SWITCH, L		1	2580 611	2580 611	2580 611	
1-14-0	**MAP AND COURTESY LAMP**						
1-14-4	LAMP PACKAGE, P		1	2587 074	2587 074	2587 075	
	D	8	1	---- ---	---- ---	2587 076	
	C1, C2	8	1	---- ---	---- ---	2587 077	
1-14-6	WIRING PACKAGE, Dome Lamp, P, D		1	2290 097	2290 097	2290 097	
1-19-0	**GLOVE COMPARTMENT LAMP**						
1-19-1	LAMP PACKAGE, C1, C2, w/o Hinge Spring		1	*2291 795	*2291 795	*2291 795	
	C1, C2, w/Hinge Spring		1	*2661 580	*2661 580	*2661 580	
1-19-5	LOCK CYLINDER, KEY and KNOB PACKAGE, V		1	⊟2585 844			

TYPE LETTERS Indicate: V - Valiant, L - Dart, R - Belvedere, W - Coronet, P - Plymouth, D - Dodge, C - Chrysler, Y - Imperial

★Indicates use as required.
⊟Indicates parts not listed in any previous parts book.
* Indicates change or addition.

Printed in U.S.A.
Prices and specifications subject to change without notice.

MyMopar.com

March 1966 Supersedes May 1965.

CODE	PART NAME AND DESCRIPTION	CYL	PER CAR	VALIANT / DART	PLYMOUTH BELVEDERE / DODGE CORONET	PLYMOUTH FURY / DODGE POLARA / CHRYSLER	IMPERIAL
1-21-0	**CLOCK**						
1-21-1	CLOCK PACKAGE, D-L, D-M, D-H	8	1	---- ---	---- ---	*2580 151	
	C	8	1	---- ---	---- ---	2580 327	
1-21-24	KNOB, Clock Reset, D	8	1	---- ---	---- ---	2290 649	2426 383
1-21-27	NUT, Reset Knob Mounting		1	---- ---	2257 804	2257 804	2257 804
1-36-0	**TACHOMETER**						
1-36-1	TACHOMETER PACKAGE, w/Console, R, W, P2, D	8	1	---- ---	2525 663	2525 663	
1-40-0	**INSTRUMENT PANEL CENTER MOULDING AND FINISH PLATE**						
1-40-2	PLATE, Instrument Panel Finish Center, w/Search Tuner Radio, Grained, C1	8	1	---- ---	---- ---	2571 794	
	Center, w/AM, FM Radio, Grained, C1	8	1	---- ---	---- ---	2571 793	
	Center, w/FM Radio, w/o Heater, Grained, C1	8	1	---- ---	---- ---	2587 266	
	Center, w/Search Tuner Radio, w/o Heater, C1	8	1	---- ---	---- ---	2587 267	
	Center, w/FM Radio, w/o Heater, Engine Turned, C2	8	1	---- ---	---- ---	2587 269	
	Center, w/AM, FM Radio, Engine Turned, C2	8	1	---- ---	---- ---	2571 784	
	Center, w/Search Tuner Radio, Engine Turned, C2	8	1	---- ---	---- ---	2571 786	
	Center, w/Search Tuner Radio, w/o Heater, Engine Turned, C2	8	1	---- ---	---- ---	2587 270	
	Center, w/FM Radio, w/o Heater, Veneer, C3	8	1	---- ---	---- ---	2587 272	
	Center, w/Search Tuner Radio, Veneer, C3	8	1	---- ---	---- ---	2571 787	
	Center, w/AM, FM Radio, Veneer, C3	8	1	---- ---	---- ---	2571 785	
	Center, w/Search Tuner Radio, w/o Heater, Veneer, C3	8	1	---- ---	---- ---	2587 273	
1-40-3	MOULDING and PLATE, w/Heater, w/AM-FM Radio, C1	8	1	---- ---	---- ---	2571 988	
	C2	8	1	---- ---	---- ---	2571 986	
	C3	8	1	---- ---	---- ---	2571 987	
	w/Search Tuner Radio, C1	8	1	---- ---	---- ---	2571 991	
	C2	8	1	---- ---	---- ---	2571 989	
	C3	8	1	---- ---	---- ---	2571 990	
1-40-8	MOULDING, Console to Air Conditioner Evaporator Unit Trim All, used with Cool Air and Cool Comfort Air Conditioning Units on Vehicles with Console		1	---- ---	---- ---	2635 220	
1-47-0	**REAR WINDOW DEFOGGER**						
1-47-1	DEFOGGER PACKAGE, Barracuda		1	2521 637			
			1	2521 448	2521 447	2521 669	2485 433
1-47-3	DUCT and SEAL		1	2277 735			
			1	---- ---	---- ---	2485 987	
			1	---- ---	---- ---	---- ---	2485 738
1-47-4	LOUVER, Inlet		1	---- ---	2277 860		
	GRILLE, Inlet, P, D		1	2291 876	---- ---	2291 876	
	LOUVER, Outlet		1	---- ---	2277 861		
	GRILLE, Outlet		1	1971 043	---- ---	2521 668	1971 043

TYPE LETTERS indicate: V - Valiant, L - Dart, R - Belvedere, W - Coronet, P - Plymouth, D - Dodge, C - Chrysler, Y - Imperial

★Indicates use as required. Numerals in parentheses ( ) refer to notes. Printed in U.S.A.

⊟Indicates parts not listed in any previous parts book. Prices and specifications subject to change without notice.

March 1966 Supersedes May 1965. * Indicates change or addition.

MyMopar.com

CODE	PART NAME AND DESCRIPTION	CYL	PER CAR	VALIANT / DART	PLYMOUTH BELVEDERE / DODGE CORONET	PLYMOUTH FURY / DODGE POLARA / CHRYSLER	IMPERIAL
1-47-0	**REAR WINDOW DEFOGGER - Cont'd**						
1-47-6	BEZEL, Inlet Grille, Barracuda		1	2521 499			
	BEZEL, Inlet Grille, P, D		1	1819 014	---- ---	1819 014	
1-47-7	SWITCH		1	2291 095	2291 095	2291 095	2291 095
1-47-8	KNOB, Switch, V, L, R		1	2497 269	2497 269		
	W, P		1	---- ---	2496 788	2580 253	2426 651
	D, C	8	1	---- ---	---- ---	2427 980	
1-47-9	BEZEL, Switch, W, P		1	---- ---	2497 250	2580 099	
	D		1	---- ---	---- ---	2580 348	
1-47-10	WIRING		1	2076 423	2076 423	2076 423	2076 423
1-47-11	NUT, Switch Mounting, V, R, C	8	1	1887 603	1887 603	6008 060	
1-47-12	TUBE		1	2096 989	2277 849	---- ---	2096 989
1-47-13	MOTOR and BRACKET		1	2096 772	2096 772	2096 772	2096 772
1-47-14	PLATE, Blower Mounting		1	1887 582	---- ---	1887 582	1887 582
1-47-15	NAME PLATE, Switch, C		1	---- ---	---- ---	2580 360	
1-47-16	WHEEL, Blower		1	1239 241	1239 241	1239 241	1239 241
1-47-17	HOUSING, Blower		1	1819 470	2277 845	1819 470	1819 470
1-47-19	CLIP, Retaining		3	---- ---	2277 840		
	Louvre, Retaining		6	---- ---	1842 965		
1-47-20	NOZZLE, w/BRACKET, Barracuda		1	2521 575			
1-48-0	**HEATER AND COMPONENTS**						
1-48-1	HEATER PACKAGE, Model 734, V		1	2521 889			
	Model 734, L		1	2521 924			
	Model 735, P		1	---- ---	---- ---	2521 893	
	Model 736, D	8	1	---- ---	---- ---	2521 894	
	Model 737, C	8	1	---- ---	---- ---	2521 895	
	HEATER, Assy. V, L		1	⊟2485 964			
1-48-4	HEATER CONTROLS, Complete, P		1	---- ---	---- ---	2497 470	
	D		1	---- ---	---- ---	2497 862	
	C		1	---- ---	---- ---	2496 816	
	Y		1	---- ---	---- ---	---- ---	2496 918
1-48-5	ADAPTOR PACKAGE, Heater, R		1	---- ---	2521 890		
	W		1	---- ---	2521 891		
1-48-7	TUBES and CONNECTOR, Heater Control,						
	P, D		1	---- ---	2496 010	2580 488	
	C	8	1	---- ---	---- ---	2497 056	2291 879
	Fresh Air Door, w/o Heater		1	---- ---	2496 012	---- ---	2291 877
1-48-10	LAMP, Heater Control, W		1	---- ---	2426 562		
	SOCKET, C	8	1	---- ---	---- ---	2097 003	2097 003

TYPE LETTERS Indicate: V - Valiant, L - Dart, R - Belvedere, W - Coronet, P - Plymouth, D - Dodge, C - Chrysler, Y - Imperial

★Indicates use as required. Numerals in parentheses ( ) refer to notes. Printed in U.S.A.

⊟Indicates parts not listed in any previous parts book. Prices and specifications subject to change without notice.

* Indicates change or addition.

March 1966 Supersedes May 1965.

MyMopar.com

CODE	PART NAME AND DESCRIPTION	CYL	PER CAR	VALIANT / DART	PLYMOUTH BELVEDERE / DODGE CORONET	PLYMOUTH FURY / DODGE POLARA / CHRYSLER	IMPERIAL
1-48-0	**HEATER AND COMPONENTS - Cont'd**						
1-48-12	BUTTON, Heater Control Push						
	Off		1	---- ---	2426 385		
	Heat		1	---- ---	2426 386		
	Def.		1	---- ---	2426 387		
	Cool		1	---- ---	2426 388		
	P, D Off		1	---- ---	---- ---	2587 470	
	P, D Heat		1	---- ---	---- ---	2587 471	
	P, D Def.		1	---- ---	---- ---	2587 472	
	C Off	8	1	---- ---	---- ---	2496 666	
	C Heat	8	1	---- ---	---- ---	2496 667	
	C Rear Heat	8	1	---- ---	---- ---	2496 668	
	C Def.	8	1	---- ---	---- ---	2580 353	
	Y Off		1	---- ---	---- --	---- ---	2496 913
	Y Lo Fan		1	---- ---	---- ---	---- ---	2496 914
	Y Hi Fan		1	---- ---	---- ---	---- ---	2496 915
	Y Def.		1	---- ---	---- ---	---- ---	2496 916
	Y Air		1	---- ---	---- ---	---- ---	2496 917
	NUT, P1, P2, D		3	---- ---	---- ---	6023 201	
1-48-15	REPAIR KIT, Heater Control Vacuum Tube, D, C		1	*2275 215	2275 215	2275 215	2275 215
1-48-23	HOUSING, Heater Control, D	8	1	---- ---	---- ---	2497 863	
1-48-24	PLUG, Temperature Control Valve Tube Hole		1	---- ---	---- ---	---- ---	1622 064
1-48-31	INDICATOR, P		1	---- ---	---- ---	2497 466	
1-48-40	MASK and LENS		1	---- ---	---- ---	---- ---	2496 880
1-48-46	WHEEL, Blower		1	2277 597	---- ---	2521 269	1689 692
1-48-70	BEZEL, Heater Control, V1-L, V2-L.		1	2497 810			
	L1-L, L2-L		1	2497 815			
	L1-H, L1-P, L2-H, L2-P, R1, R2		1	2497 818	2497 086		
	w/LENS and HOUSING, C	8	1	---- ---	---- --	2497 676	
	Heater Blower Switch, R1, R2, P, D		1	---- ---	2497 702	2497 702	
	W1, W2		1	---- ---	2497 401		
	Fresh Air Door, W1, W2		1	---- ---	2497 453		
1-48-88	CORE, Heater.		1	2277 535	2277 023	2521 268	1885 826
1-48-90	SEAL, Heater Core Tube		2	---- ---	1604 116	---- ---	1604 116
	Mixed Air Door Shaft		1	2277 648			
1-48-94	RETAINER, Heater Core Tube Seal		1	2485 135			
1-48-122	HOUSING and TUBE PACKAGE, P		1	---- ---	---- ---	⊟2808 899	
	C, D	8	1	---- ---	---- ---	⊟2808 904	
1-48-125	HOUSING, Heater		1	---- ---	*2485 262	---- ---	*2097 746
	HOUSING, Heater, Rear		1	*2485 965			
1-48-126	GASKET, Heater Housing Scroll Cover Mounting		1	---- ---	---- ---	2485 478	
1-48-127	COVER, Heater Control Housing, D		1	---- ---	---- ---	2497 869	
1-48-144	NOZZLE, Defroster, Right		1	---- ---	2485 298	2485 396	
	Left		1	---- ---	2485 299	2485 646	

TYPE LETTERS Indicate: V - Valiant, L - Dart, R - Belvedere, W - Coronet, P - Plymouth, D - Dodge, C - Chrysler, Y - Imperial

★Indicates use as required. Numerals in parentheses ( ) refer to notes. Printed in U.S.A.

⊟Indicates parts not listed in any previous parts book. Prices and specifications subject to change without notice.

March 1966 Supersedes May 1965. * Indicates change or addition.

MyMopar.com

CODE	PART NAME AND DESCRIPTION	CYL	PER CAR	VALIANT / DART	PLYMOUTH BELVEDERE / DODGE CORONET	PLYMOUTH FURY / DODGE POLARA / CHRYSLER	IMPERIAL
1-48-0	**HEATER AND COMPONENTS - Cont'd**						
1-48-145	GROMMET, Blower Mounting Bracket		1	---- ---	2277 424		
1-48-151	TUBE, Defroster Outlet, Right		1	2277 992	---- ---	2485 946	
	Left		1	2277 993	---- ---	2485 947	
			2	---- ---	2096 989	---- ---	2096 989
1-48-158	GRILLE, Heater Defroster Outlet, Blue		2	4233 AB8			
	Turquoise		2	4233 AQ8			
	Gold		2	4233 AY8			
	Red		2	4233 VR8			
	Tan		2	4233 VT8			
	Black		2	4233 VX9			
1-48-179	CLIP, Front to Rear Housing		11	2521 336			
1-48-253	BUMPER, Heater Defroster Damper		1	---- ---	---- ---	2080 201	
1-48-254	RETAINER, Heater Control Cable, P		3	2197 678	---- ---	2197 678	
	Vacuum Actuater Shaft		2	---- ---	2197 678		
1-48-258	ACTUATOR, Fresh Air Door		1	---- ---	*2485 266	---- ---	2277 091
	Defroster Door, D, C		1	---- ---	2485 266	2219 982	*2219 982
	Air Deflector, D, C		1	---- ---	2485 266	2219 981	2219 981
	Shut-Off Door, D, C		1	---- ---	---- ---	2485 948	
1-48-267	CLIP, Vacuum Actuator Shut-Off Door		1	---- ---	---- ---	6008 144	
	Defroster Damper		1	---- ---	---- ---	6008 145	
1-48-328	DUCT, Fresh Air Inlet		1	---- ---	2277 342	2485 454	
1-48-331	CONNECTOR, Fresh Air Inlet Duct		1	---- ---	---- ---	2485 955	
1-48-355	PLATE, Vent Door Lock		1	2277 516			
1-48-356	SHAFT, w/LINK, Fresh Air Door		1	---- ---	2162 525		
1-48-357	RETAINER, Fresh Air Door Shaft		1	---- ---	2216 735		
1-48-358	LOCK, Heater Vent Door		1	2277 515			
1-48-362	SEAL, Fresh Air Door Housing to Dash		1	---- ---	2162 245		
	Heater to Plenum		1	2277 669			
	Fresh Air Duct to Plenum		1	2277 669			
1-48-365	DOOR, Fresh Air		1	---- ---	2162 418	---- ---	1830 633
	DOOR, Mixed Air		1	⊟2485 970	---- ---	2485 423	
	DOOR, Shut-Off		1	---- ---	---- ---	⊟2485 419	
1-48-374	CONTROL, Fresh Air Door, Right, P, D		1	---- ---	---- ---	2587 467	
	Left		1	---- ---	---- ---	2580 251	
	Right, w/Air Conditioning, C	8	1	---- ---	---- ---	2587 467	
	Right, w/o Air Conditioning, C	8	1	---- ---	---- ---	2580 250	
1-48-375	ROD, Heater to Plenum		1	2277 591			
1-48-379	DEFLECTOR, Air		1	---- ---	2485 259	---- ---	2197 768
1-48-383	HOUSING, Fresh Air Vent Door		1	---- ---	2162 239		
	Right, w/Door		1	---- ---	---- ---	2485 354	
	Left, w/Door		1	---- ---	---- ---	2485 355	
1-48-389	BOLT, Fresh Air Door Linkage Mounting		1	---- ---	---- ---	---- ---	1839 345

TYPE LETTERS Indicate: V - Valiant, L - Dart, R - Belvedere, W - Coronet, P - Plymouth, D - Dodge, C - Chrysler, Y - Imperial

★Indicates use as required. Numbers in parentheses ( ) refer to notes. Printed in U.S.A.

⊟Indicates parts not listed in any previous parts book. Prices and specifications subject to change without notice.

* Indicates change or addition.

MyMopar.com

CODE	PART NAME AND DESCRIPTION	CYL	PER CAR	VALIANT / DART	PLYMOUTH BELVEDERE / DODGE CORONET	PLYMOUTH FURY / DODGE POLARA / CHRYSLER	IMPERIAL
1-48-0	**HEATER AND COMPONENTS - Cont'd**						
1-48-391	BRACKET, Fresh Air Door Vacuum Actuator						
	Mounting		1	---- ---	---- ---	---- ---	1885 836
	On Dash Panel		1	---- ---	---- ---	---- ---	1960 716
1-48-393	LEVER, w/LINK, Air Deflector		1	---- ---	2485 268		
1-48-396	WASHER, Fresh Air Door Linkage Spring		1	---- ---	---- ---	---- ---	1152 315
1-48-401	HANDLE, Vent Door		1	2277 517			
1-48-405	LEVER, Mixed Air Door Cam		1	---- ---	---- ---	*2521 656	
	LEVER and SHAFT, Mixed Air Door		1	---- ---	---- ---	*2485 428	
1-48-407	BUSHING, Mixed Air Door Cam Lever Pin		1	---- ---	---- ---	2521 657	
1-48-555	HOSE, Heater, 50 Foot Roll		★	1315 466	1315 466	1315 466	1315 466
	Valve to Core		1	1779 885	---- ---	*2096 932	1595 160
	Core to Pump	8	1	1315 466	*1315 466	*1315 466	2096 932
	Core to Pump, w/426 cu. in. Engine	8	1	---- ---	2197 011		
	Engine to Valve	8	1	2096 932	*1315 466	2096 932	2096 932
1-48-557	SLEEVE, Engine to Valve Hose, w/426 cu. in. Engine	8	1	---- ---	2127 280		
	Heater Core to Pump House	8	1	*2127 280			
1-48-559	CLAMP, Hose, Worm Gear Type 1/2" to 1"		★	2448 761	*2448 761	2448 761	
1-48-572	NIPPLE, Heater Hose Inlet, R1, W1		1	1971 061	1971 061	1971 061	1971 061
	w/318 cu. in. Engine	8	1	---- ---	1779 257		
	w/361, 383, 413 and 426 cu. in. Engine	8	1	---- ---	1971 061		
	Return		1	1971 061	1971 061	1971 061	
	w/361, 383, 413 and 426 cu. in. Engine	8	1	---- ---	1779 257	1779 257	1779 257
1-48-575	ELBOW, Heater Hose Return, w/361, 383 and 413 cu. in. Engine, w/Leece-Neville Alternator	8	1	---- ---	*2521 228	2521 228	
1-48-599	MOTOR, Heater Blower, P, D.		1	2485 479	2277 419	2485 804	
	C	8	1	---- ---	---- ---	2485 413	2084 862
1-48-600	CLIP, Blower Rotor Balancing		★	---- ---	2277 247		
			★	---- ---	2277 249		
			★	---- ---	2277 670		
			★	---- ---	2277 884		
			★	---- ---	2277 885		
			★	---- ---	2277 886		
			★	---- ---	2277 887		
			★	---- ---	2277 888		
1-48-602	STATOR, Heater Blower		1	---- ---	2219 102		
1-48-603	ROTOR, Heater Blower		1	---- ---	2521 764		
1-48-606	TUBE, Blower Motor Vent		1	---- ---	---- ---	2485 445	
1-48-608	GASKET, Blower Motor Mounting		1	---- ---	---- ---	2485 429	
1-48-611	BRACKET, Blower Mounting		1	---- ---	2277 345		
1-48-683	BRACKET, Blower Motor Mounting		1	---- ---	---- ---	---- ---	1880 211
1-48-684	GROMMET, Blower Motor Mounting Bracket		3	---- ---	---- ---	---- ---	1879 827

TYPE LETTERS Indicate: V - Valiant, L - Dart, R - Belvedere, W - Coronet, P - Plymouth, D - Dodge, C - Chrysler, Y - Imperial

★Indicates use as required. Numerals in parentheses ( ) refer to notes. Printed in U.S.A.

⊟Indicates parts not listed in any previous parts book. Prices and specifications subject to change without notice.

March 1966 Supersedes May 1965. * Indicates change or addition.

MyMopar.com

CODE	PART NAME AND DESCRIPTION	CYL	PER CAR	VALIANT / DART	PLYMOUTH BELVEDERE / DODGE CORONET	PLYMOUTH FURY / DODGE POLARA / CHRYSLER	IMPERIAL
1-48-0	**HEATER AND COMPONENTS - Cont'd**						
1-48-688	SPACER, Blower Motor Mounting Bracket . . .		1	---- ---	2277 873		
			3	---- ---	---- ---	---- ---	1605 271
1-48-707	DUCT, Fresh Air Vent, Left		1	2277 565			
	Front Housing and Distribution		1	2485 962			
	Fresh Air Vent, for Cars without Heaters . .		1	2277 770	2277 675		
	Heater Distribution		1	---- ---	---- ---	---- ---	2277 754
1-48-709	CLIP, Duct to Backboard		7	2485 241			
	Duct to Back Plate		1	*2485 241			
1-48-712	LEVER, Defroster Damper		1	---- ---	1819 697	---- ---	1819 689
	Shut-Off Damper		1	---- ---	---- ---	---- ---	1819 689
1-48-770	SWITCH, Heater Blower, P		1	2497 006	2291 095	2496 910	
	D	8	1	---- ---	---- ---	2497 843	
	C	8	1	---- ---	---- ---	2497 996	
	Push Button Vacuum, D, 4 Button	8	1	---- ---	*2256 681	*2496 873	
	C, Y	8	1	---- ---	---- ---	2497 387	2290 089
1-48-777	WIRING, Vacuum and Blower Switch, C	8	1	---- ---	---- ---	2497 636	
1-48-779	NUT, Blower Switch Mounting, R		1	---- ---	1887 603		
1-48-783	INSULATOR, Blower Switch Terminal		1	---- ---	---- ---	2497 481	
1-48-801	KNOB, Blower Switch, R		1	2290 909	2497 274		
	W		1	---- ---	2497 444		
1-48-832	RESISTOR, Blower Motor, P, D.		1	2521 409	2277 016	2485 416	
	C	8	1	---- ---	---- ---	2485 451	
1-48-854	VALVE, Temperature Control.		1	---- ---	2448 674	---- ---	2084 460
1-48-855	SEAL, Temperature Control Valve		1	---- ---	2277 026		
1-48-858	GASKET, Control Valve Mounting		1	---- ---	2277 025		
1-48-867	PLATE, Temperature Control, D		1	---- ---	*2426 555	2580 697	
1-48-937	NUT, Temperature Control Cable Retaining . .		1	---- ---	6022 958	---- ---	6022 958
1-48-940	ARM, Temperature Control, w/PLATE, P . . .		1	2497 239	2497 080	2497 461	
	C, Y	8	1	---- ---	---- ---	2496 821	2497 681
1-48-941	CABLE, Temperature Control, P		1	2497 643	2587 450	2587 439	
	D, C	8	1	---- ---	---- ---	2580 863	2580 864
	Defroster Control, P		1	2497 644	---- ---	2587 441	
	Air Shut-Off Door, P.		1	2497 642	---- ---	2497 643	
	CLIP		★	6015 143	6015 143	6015 143	6015 143
1-48-942	KNOB, Temperature Control, R, P		1	2497 237	2426 563	2497 746	
	W, D		1	---- ---	2497 710	2497 841	
	C	8	1	---- ---	---- ---	2497 657	2497 685
	Defroster and Air Control, P		1	2497 237	---- ---	2497 746	
1-48-950	RETAINER, Cable, P		★	2197 678	2197 678	2197 678	
	CLAMP, Cable, P		1	---- ---	---- ---	2497 457	

TYPE LETTERS Indicate: V - Valiant, L - Dart, R - Belvedere, W - Coronet, P - Plymouth, D - Dodge, C - Chrysler, Y - Imperial

★Indicates use as required. Numerals in parentheses ( ) refer to notes. Printed in U.S.A.

⊟Indicates parts not listed in any previous parts book. Prices and specifications subject to change without notice.

* Indicates change or addition. March 1966 Supersedes May 1965.

MyMopar.com

1-67-0 SAFETY SEAT BELT

NOTE: When Ordering Seat Belts, Specify Color Required, Medium Red, Medium Blue, Dark Green, Tan, Turquoise, Grey and Black.

CODE	PART NAME AND DESCRIPTION	CYL	PER CAR	VALIANT / DART	PLYMOUTH BELVEDERE / DODGE CORONET	PLYMOUTH FURY / DODGE POLARA / CHRYSLER	IMPERIAL
1-67-1	BELT PACKAGE, Safety Seat Front, Tip End 26" long		★	2520 260	2520 260	2520 260	2520 260
	Front, Tip End 35" long		★	2583 279	2583 279	2583 279	2583 279
	Rear		★	*2299 971	*2299 971	*2299 971	*2299 971
	Sta. Wgn., 2nd and 3rd Seat		★	2299 971	2299 971	2299 971	
1-67-3	REINFORCEMENT, w/NUT, Front Floor Pan Seat Belt, Outer		2	---- ---	---- ---	---- ---	2573 181
	REINFORCEMENT, Front Floor Pan Seat Belt, Inner		2	2483 098	2483 098	2483 098	2483 098
	REINFORCEMENT, Body Side Sill Inner Seat Belt, Outer		2	2483 102	2483 102	2573 559	
	REINFORCEMENT, Seat Belt Mounting to Floor Pan, Lower, P1-P, P2-P, D2-P		1	---- ---	---- ---	2528 659	
1-67-5	PLUG, Safety Belt Anchor Hole Seal		4	2423 975	2423 975	2423 975	2423 975
	GROMMET PACKAGE, Front Seat Safety Belt, C3	8	2	---- ---	---- ---	2520 261	2520 261
1-67-6	EYE BOLT, Frt. Seat Safety Belt		2	*2428 046	*2428 046	*2428 046	*2428 046
1-67-9	WASHER, Front Seat Safety Belt to Floor		4	2299 534	2299 534	2299 534	
1-67-12	SPACER, Front Seat Belt Swivel Plate		2	2486 570	2486 570	2486 570	
1-67-15	RETRACTOR, Front Seat Safety Belt		1	2520 555	2520 555	2520 555	2520 555
1-67-16	BRACKET, Console Extension Safety Belt Mounting, P1-P, P2-P, D2-P		1	---- ---	---- ---	2528 669	
1-67-18	COVER, Front Seat Safety Belt and Retractor, Medium Blue		2	⊟2585 810	⊟2585 810		
	Dark Turquoise		2	*4496 AQ8	*4496 AQ8		
	Medium Red		2	⊟2585 813	⊟2585 813	⊟2585 826	
	Dark Blue		2	*4496 AB8	*4496 AB8		
	Dark Red		2	⊟2585 814	⊟2585 814	---- ---	⊟2807 154
	Light Yellow		2	⊟2585 817	⊟2585 817	⊟2585 823	
	Orange Yellow Gold		2	⊟2585 815	⊟2585 815	⊟2585 828	⊟2807 168
	Black		2	⊟2585 816	⊟2585 816	---- ---	⊟2807 167
	Medium Blue		2	---- ---	---- ---	⊟2585 824	
	Dark Blue		2	---- ---	---- ---	⊟2585 825	
	Medium Turquoise		2	---- ---	---- ---	⊟2585 826	
	Dark Red		2	---- ---	---- ---	⊟2585 827	⊟2807 159
	Medium Beige		2	---- ---	---- ---	⊟2585 828	
	Dark Cordovan		2	---- ---	---- ---	⊟2585 829	
	Medium Blue		2	---- ---	---- ---	---- ---	⊟2807 169
	Dark Red		2	---- ---	---- ---	---- ---	⊟2807 170
	Dark Yellow Green		2	---- ---	---- ---	---- ---	⊟2807 171
	Mauve		2	---- ---	---- ---	---- ---	*2807 172
	Tan		2	⊟2585 823	⊟2585 823	⊟2585 823	⊟2585 823
	COVER PACKAGE, Front Seat Safety Belt and Retractor, All 2 doors except w/Bucket Seats Medium Green		1	---- ---	---- ---	---- ---	⊟2807 158
	Medium Blue		1	2585 801	2585 801	2585 818	⊟2807 152
	Medium Turquoise		1	2585 802	2585 802	---- ---	⊟2807 153
	Dark Turquoise		1	2585 803	2585 803	2585 820	
	Medium Red		1	2585 804	2585 804	---- ---	⊟2807 154
	Dark Red		1	2585 805	2585 805	2585 821	
	Orange Yellow Tan		1	2585 806	2585 806		

TYPE LETTERS Indicate: V - Valiant, L - Dart, R - Belvedere, W - Coronet, P - Plymouth, D - Dodge, C - Chrysler, Y - Imperial

★Indicates use as required. Numerals in parentheses ( ) refer to notes. Printed in U.S.A.

⊟Indicates parts not listed in any previous parts book. Prices and specifications subject to change without notice.

March 1966 Supersedes May 1965. * Indicates change or addition.

MyMopar.com

CODE	PART NAME AND DESCRIPTION	CYL	PER CAR	VALIANT / DART	PLYMOUTH BELVEDERE / DODGE CORONET	PLYMOUTH FURY / DODGE POLARA / CHRYSLER	IMPERIAL
1-67-0	**SAFETY SEAT BELT - Cont'd**						
1-67-18	COVER PACKAGE - Cont'd						
	Black		1	2585 807	2585 807	⊟2584 518	⊟2807 155
	Yellow Gold		1	2585 808	2585 808	---- ---	⊟2807 156
	Dark Blue		1	---- ---	---- ---	2585 819	
	All 4 Doors, All 2 Doors w/Bucket Seats						
	Medium Turquoise		1	2585 811	2585 811		
	COVER, 2nd Seat Safety Belt, Sta. Wgn.,						
	P2, C1, C3 Medium Blue		2	---- ---	---- ---	⊟2807 188	
	P, D, C1, C3 Orange Yellow Gold		2	---- ---	---- ---	⊟2807 189	
	P2 Medium Turquoise	8	2	---- ---	---- ---	⊟2807 190	
	P, D, C1, C3 Dark Red		2	---- ---	---- ---	⊟2807 191	
	C1, C3 Black	8	2	---- ---	---- ---	⊟2807 192	
	P1, D Yellow Gold	8	2	---- ---	---- ---	⊟2807 193	
	P1, P2, D Dark Blue		2	---- ---	---- ---	⊟2807 194	
	D2 Dark Turquoise	8	2	---- ---	---- ---	⊟2807 195	
	Medium Tan		2	---- ---	---- ---	---- ---	⊟2807 168
	Black		2	---- ---	---- ---	---- ---	⊟2807 167
	COVER PACKAGE, Rear Seat Belt and Retractor, Barracuda, and Sta. Wgn.,						
	V, L Medium Blue		1	⊟2807 176			
	Sta. Wgn. Dark Turquoise		1	⊟2807 177			
	Barracuda and Sta. Wgn., Medium Blue		1	⊟2807 178			
	Barracuda Yellow Gold		1	⊟2807 179			
	Sta. Wgn., V, L Orange Yellow Gold		1	⊟2807 180			
	Barracuda Black		1	⊟2807 181			
	Sta. Wgn., L Dark Red		1	⊟2807 182			
1-67-19	RETAINER, Seat Safety Belt Cover, P, D, C1, C3		2	---- ---	---- ---	*2583 641	
1-67-20	HARNESS PACKAGE, Seat Belt Shoulder		1	⊟2586 049	⊟2586 049	⊟2586 049	⊟2586 049
1-76-0	**MIRROR**						
1-76-1	MIRROR PACKAGE, Outside Rear View, Manual		1	2299 574	2299 574	2299 574	
	MIRROR PACKAGE, Left, w/Remote Control		1	2495 878	2495 878	2495 878	
	Right, Manual		1	---- ---	---- ---	---- ---	2275 015
	Passenger Side, Door Mounted		1	2525 938	2525 938	2525 938	
	MIRROR PACKAGE, Drivers Side, Door Mounted		1	*2525 939	*2525 939	*2525 939	
1-76-2	MIRROR, Vanity		1	1839 845	1839 845	1839 845	
	MIRROR, Visor, Vanity, Right Side		1	---- ---	---- ---	---- ---	2490 772
1-76-3	MIRROR, Inside Rear View, Prismatic		1	2299 846	2299 846	2299 846	2421 208
1-76-18	CONTROL, Remote Control Rear View Mirror		1	2486 371	2486 371	2486 371	
	NUT, Rear View Mirror Control, Attaching		1	6025 708	6025 708	6025 708	
1-76-27	ADAPTER PACKAGE, Rear View Mirror, Remote Control, Right or Left Side		1	---- ---	---- ---	---- ---	2495 887
1-82-0	**WINDSHIELD WASHER**						
1-82-2	WASHER PACKAGE, Windshield Model 37		1	2580 408	2580 408	2580 409	
	SWITCH ASSY, Windshield Wiper and Washer		1	2497 282	2497 282	2497 282	
1-82-4	RESERVOIR, Factory Installed		1	2497 502	2497 502	2497 580	2497 501

TYPE LETTERS Indicate: V - Valiant, L - Dart, R - Belvedere, W - Coronet, P - Plymouth, D - Dodge, C - Chrysler, Y - Imperial

★Indicates use as required. Numerals in parentheses ( ) refer to notes. Printed in U.S.A.
⊟Indicates parts not listed in any previous parts book. Prices and specifications subject to change without notice.
* Indicates change or addition. March 1966 Supersedes May 1965.

MyMopar.com

CODE	PART NAME AND DESCRIPTION	CYL	PER CAR	VALIANT / DART	PLYMOUTH BELVEDERE / DODGE CORONET	PLYMOUTH FURY / DODGE POLARA / CHRYSLER	IMPERIAL
1-82-0	**WINDSHIELD WASHER - Cont'd**						
1-82-6	NOZZLE		2	2290 840	---- ---	2496 193	
			1	---- ---	2497 506-7		
			2	---- ---	---- ---	---- ---	1887 321
	w/BASE		2	---- ---	---- ---	---- ---	1887 319
1-82-8	CONNECTOR, Hose		1	2258 912	2258 912	2258 912	1523 160
1-82-15	SCREW, Pump Mounting		3	2497 548	2497 548	2497 548	
1-82-16	GROMMET, Pump Mounting		3	2496 154	2496 154	2496 154	2496 154
1-82-22	CAP, Reservoir		1	2497 500	2497 500	2497 500	2497 500
1-82-25	PUMP, Electric		1	2495 540	2495 540	2495 540	2495 540
1-82-29	CIRCUIT BREAKER and TERMINAL, W/Shield Washer		1	*2290 102	*2290 102	*2290 102	*2290 102
1-82-44	HOSE, Tee to Nozzle, 3/16" O.D. x 127" long.		1	2096 623	2096 623	2096 623	2096 623
	Tee to Pump, 9/32" O.D. x 90" long		1	2197 650	2197 650	2197 650	2197 650
	Reservoir to Pump, 13/32" O.D. x 96" long		1	2097 055	---- ---	2097 055	2097 055
1-87-0	**RADIO**						
1-87-1	RADIO PACKAGE, Model 222, V		1	2580 868			
	Model 372, FM, AM, V		1	2661 687			
	Model 373, FM, AM, L		1	2661 689			
	Model 224, AM, R		1	---- ---	2580 870		
	Model 226, W		1	---- ---	2580 872		
	Model 225, P		1	---- ---	---- ---	2580 874	
	Model 363, D	8	1	---- ---	---- ---	2580 876	
	Model 235, AM, D	8	1	---- ---	---- ---	2661 564	
	Model 364, AM, FM, D	8	1	---- ---	---- ---	2580 877	
	Model 365, Deluxe Model, C	8	1	---- ---	---- ---	2580 878	
	Model 366, AM, FM, C	8	1	---- ---	---- ---	2580 879	
	Model 416, C, Search Tune	8	1	---- ---	---- ---	2580 880	
1-87-2	SPEAKER, Instrument Panel Radio		1	2427 632	2427 589		
	AM-FM		1	---- ---	2427 592		
	P		1	---- ---	---- ---	2497 394	
	D	8	1	---- ---	---- ---	2496 874	
	C	8	1	---- ---	---- ---	2427 604	2427 592
	Rear Compartment, Speaker Only		1	2427 603	2427 603	2427 603	2427 603
	SPEAKER PACKAGE, Rear Compartment, P, D, C, Cv.Cp. Only		1	---- ---	---- ---	2580 779	
	Except Cv.Cp., P 2 D. H.T., D, C		1	---- ---	---- ---	2580 366	
	Except Cv.Cp., P 2 D. Sed., 4 D. Sed., 4 D. H.T.		1	2580 367	2580 367	2580 367	
	w/Reverberator, P, D, C, Cv.Cp. Only		1	---- ---	---- ---	⊟2820 538	
	Except Cv.Cp., V, L, R, W, P, D, C, w/Reverberator		1	2580 364	2580 364	2580 364	
	w/Reverberator		1	---- ---	---- ---	---- ---	2580 368
1-87-5	SWITCH and CABLE, Radio Foot Control		1	---- ---	---- ---	1819 409	1819 409
1-87-6	PLUG, Foot Control Switch		1	---- ---	---- ---	---- ---	*2086 634

TYPE LETTERS Indicate: V - Valiant, L - Dart, R - Belvedere, W - Coronet, P - Plymouth, D - Dodge, C - Chrysler, Y - Imperial

★Indicates use as required. Numerals in parentheses ( ) refer to notes. Printed in U.S.A.

⊟Indicates parts not listed in any previous parts book. Prices and specifications subject to change without notice.

MyMopar.com

CODE	PART NAME AND DESCRIPTION	CYL	PER CAR	VALIANT / DART	PLYMOUTH BELVEDERE / DODGE CORONET	PLYMOUTH FURY / DODGE POLARA / CHRYSLER	IMPERIAL
1-87-0	**RADIO - Cont'd**						
1-87-7	GROMMET, Front Floor Carpet Selector Switch, C		1	---- ---	---- ---	2292 474	2292 474
1-87-12	BRACKET, Instrument Panel Speaker Mounting, C		2	---- ---	---- ---	2497 788	
1-87-21	GRILLE, Rear Compartment Speaker, P except Cv.Cp.		1	2291 876	2291 876	2291 876	
	P, D, C1, C2, Cv. Cp.		1	---- ---	---- ---	2577 286	
	GRILLE, Rear Compartment Speaker, Black		1	---- ---	---- ---	---- ---	4411 VX8
1-87-22	BEZEL, Radio, V, L1		1	2497 311			
	L, R		1	2497 366	2497 704		
	W, Coronet 440, 500		1	---- ---	2497 649		
	W, Coronet		1	---- ---	2580 119		
	P		1	---- ---	---- ---	2497 426	
	C, w/AM and FM-Radio		1	---- ---	---- ---	⊟2497 805	
	BEZEL, Rear Compartment Speaker, P		1	1819 014	1819 014	1819 014	
	Reverberator Control, P		1	---- ---	---- ---	2580 102	
	D		1	---- ---	---- ---	2580 347	
	Fader Control, C1, C2, C3		1	---- ---	---- ---	2580 702	
1-87-23	MEDALLION, Rear Compartment Speaker, 2 D. H. T., Cv. Cp.		1	---- ---	---- ---	2609 006	2490 468
	D, Cv.Cp.		1	---- ---	---- ---	2577 280	
	C300, Cv.Cp.		1	---- ---	---- ---	2577 161	
1-87-25	BRACKET, Rear Speaker Grille Mounting, P, D, C1, C2, Cv.Cp.		1	---- ---	---- ---	2419 038	
	To Shelf Panel, 2 D. H.T.		1	---- ---	---- ---	---- ---	2490 870
	Grille to Shroud, 2 D. H.T., Cv.Cp.		1	---- ---	---- ---	---- ---	2490 803
1-87-30	PLATE, Instrument Panel Speaker Mounting, D		1	2217 363	2427 480	2497 602	
	P, D, C1, C2, Cv.Cp.		1	---- ---	---- ---	2577 306	
1-87-32	BRACE, Rear Seat Back Radio Speaker Grille Screen, Cv.Cp., P, D, C1, C2		1	---- ---	---- ---	2440 971	
1-87-36	CLIP, Radio Face Plate Mounting		2	---- ---	---- ---	---- ---	1298 045
1-87-58	CONTROL, Rear Compartment Speaker Reverberator		1	2580 357	2580 357	2580 357	2580 356
	Fader		1	2497 884	2497 884	2497 884	2580 358
1-87-61	BRACKET, Rear Speaker Reverberator Mounting		1	2427 342			
	BRACKET PACKAGE, Reverberator Mounting		1	2525 655	2525 657	2584 895	
1-87-180	KNOB, Reverberator Control, Field Installed		1	2427 980	2427 980	2427 980	2427 980
	P2, Factory Installed		1	---- ---	---- ---	2580 253	
	KNOB and SPRING, Fader Control C		1	---- ---	---- ---	2580 703	
1-87-292	NAME PLATE, Rear Speaker Fader Control, Marked Speaker		1	2580 361	2580 361	2580 361	2580 361
1-87-334	GASKET, Rear Speaker Grille Screen, Cv.Cp.		1	---- ---	---- ---	2440 969	
1-87-335	STUD, Rear Compartment Speaker Reverberator Mounting Bracket Mounting		4	2257 730			

TYPE LETTERS Indicate: V - Valiant, L - Dart, R - Belvedere, W - Coronet, P - Plymouth, D - Dodge, C - Chrysler, Y - Imperial

★Indicates use as required. Numerals in parentheses ( ) refer to notes. Printed in U.S.A.

⊟Indicates parts not listed in any previous parts book. Prices and specifications subject to change without notice.

* Indicates change or addition.

MyMopar.com

CODE	PART NAME AND DESCRIPTION	CYL	PER CAR	VALIANT / DART	PLYMOUTH BELVEDERE / DODGE CORONET	PLYMOUTH FURY / DODGE POLARA / CHRYSLER	IMPERIAL
1-87-0	**RADIO - Cont'd**						
1-87-404	WIRING, Rear Speaker to Control		1	2427 611	2427 611	2427 611	2427 611
	w/Reverberator		1	2427 445	2427 445	2427 445	2427 445
	WIRING, Rear Speaker Reverberator		1	---- ---	---- ---	---- ---	2587 500
1-88-0	**RADIO ANTENNA**						
1-88-1	ANTENNA PACKAGE, Manual		1	2291 336	2291 336	2580 607	
	Power		1	---- ---	---- ---	2497 541	
1-88-6	ADAPTER, Mounting Upper, D		1	---- ---	---- ---	2580 402	
	Upper, C		1	---- ---	---- ---	2580 403	
	Upper, P		1	---- ---	---- ---	2580 401	
	Power, w/GASKET, Upper, C		1	---- ---	---- ---	2497 538	
	Power, w/GASKET, Lower, C		1	---- ---	---- ---	2497 517	
	Manual, w/GASKET, Upper		1	---- ---	2291 671		
	Manual, w/GASKET		1	2258 745			
1-88-7	PIN and CONNECTOR PACKAGE, for Power Antenna, C		1	---- ---	---- ---	*2258 899	*2258 899
1-88-20	DOME NUT, Power Antenna		1	---- ---	---- ---	---- ---	2291 832
1-88-30	SPACER, Antenna Mounting, w/Die Cast Collar		1	---- ---	---- ---	*2580 405	
	w/Spring Steel Collar		1	---- ---	---- ---	*2631 772	
1-88-51	COVER, Front Fender Shield Antenna Hole, Right		1	---- ---	---- ---	---- ---	2461 810
	Left		1	---- ---	---- ---	---- ---	2409 347
1-88-52	SEAL, Front Fender Shield Antenna Hole Cover, Right		1	---- ---	---- ---	---- ---	2461 801
1-88-107	GASKET, Antenna Mounting, w/Die Cast Collar		1	---- ---	---- ---	*2580 406	
	w/Spring Steel Collar		1	---- ---	---- ---	*2631 773	
	Mast Mounting Adapter, Upper		1	---- ---	---- ---	---- ---	2197 448
1-88-117	MOTOR, w/DRIVE	8	1	---- ---	---- ---	*1922 068	*1972 068
1-88-120	CAP NUT, Antenna Mounting, Manual		1	*2258 831	*2258 831		
	w/Spring Steel Collar		1	---- ---	---- ---	*2631 774	
	w/Die Cast Collar		1	---- ---	---- ---	*2580 407	
	Dome, Power, C		1	---- ---	---- ---	2291 832	
1-88-124	ESCUTCHEON and INSERT, Power Antenna		1	---- ---	---- ---	2525 252	*2525 252
1-88-126	BRACKET, Power Antenna Mounting		1	---- ---	---- ---	---- ---	2496 175
1-88-159	MAST, w/LEAD, Antenna Manual		1	2580 640	2580 640	2580 622	
	MAST, Power Antenna, C		1	---- ---	---- ---	⊟1972 065	*2497 509
1-88-160	INSULATOR and SPACER PACKAGE, Power Antenna Mast		1	---- ---	---- ---	*2525 253	*2525 253
1-88-162	CABLE, Power Antenna Lead-In		1	---- ---	---- ---	2580 631	2580 632
1-88-170	COLLAR, Antenna Mounting Manual, w/Spring Steel Collar		1	---- ---	---- ---	*2587 690	
	w/Die Cast Collar		1	---- ---	---- ---	*2580 404	
	Grounding, Power		1	---- ---	---- ---	2497 569	
1-88-205	SWITCH, Antenna Power		1	---- ---	---- ---	---- ---	2497 677

TYPE LETTERS Indicate: V - Valiant, L - Dart, R - Belvedere, W - Coronet, P - Plymouth, D - Dodge, C - Chrysler, Y - Imperial

★Indicates use as required. Numerals in parentheses ( ) refer to notes. Printed in U.S.A.

⊟Indicates parts not listed in any previous parts book. Prices and specifications subject to change without notice.

MyMopar.com

GROUP 2 - FRONT SUSPENSION

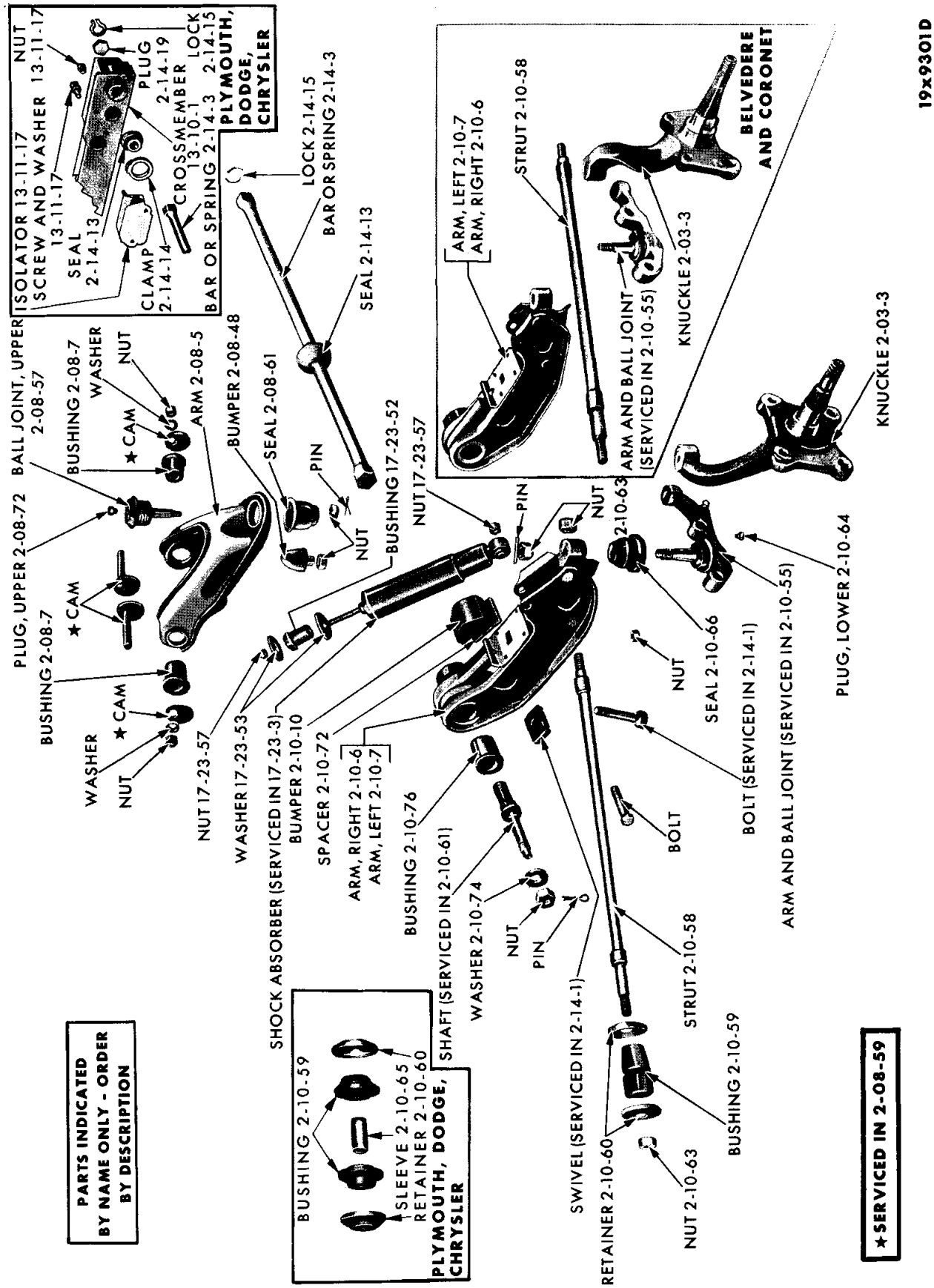

MyMopar.com

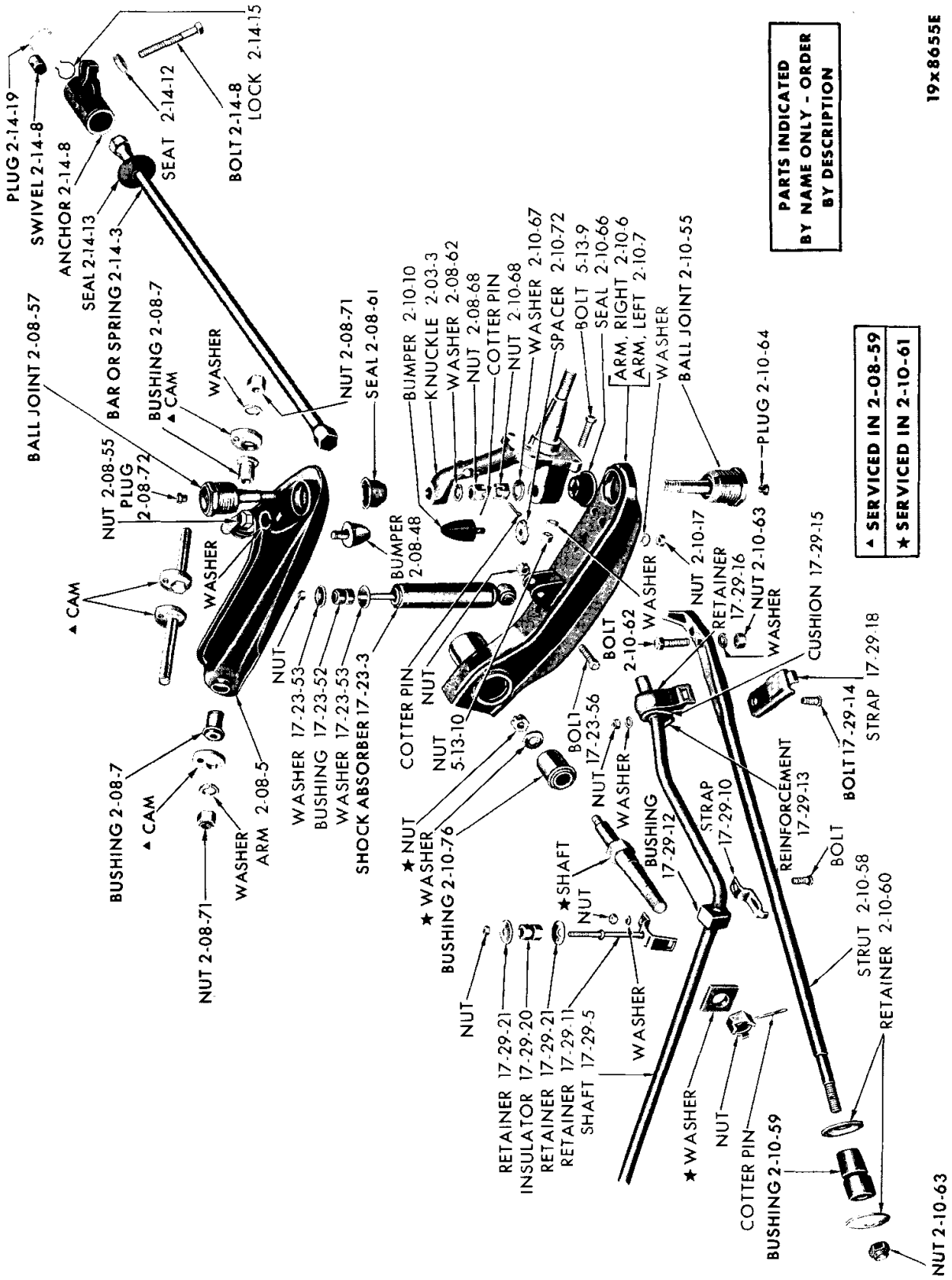

FRONT SUSPENSION - IMPERIAL

MyMopar.com

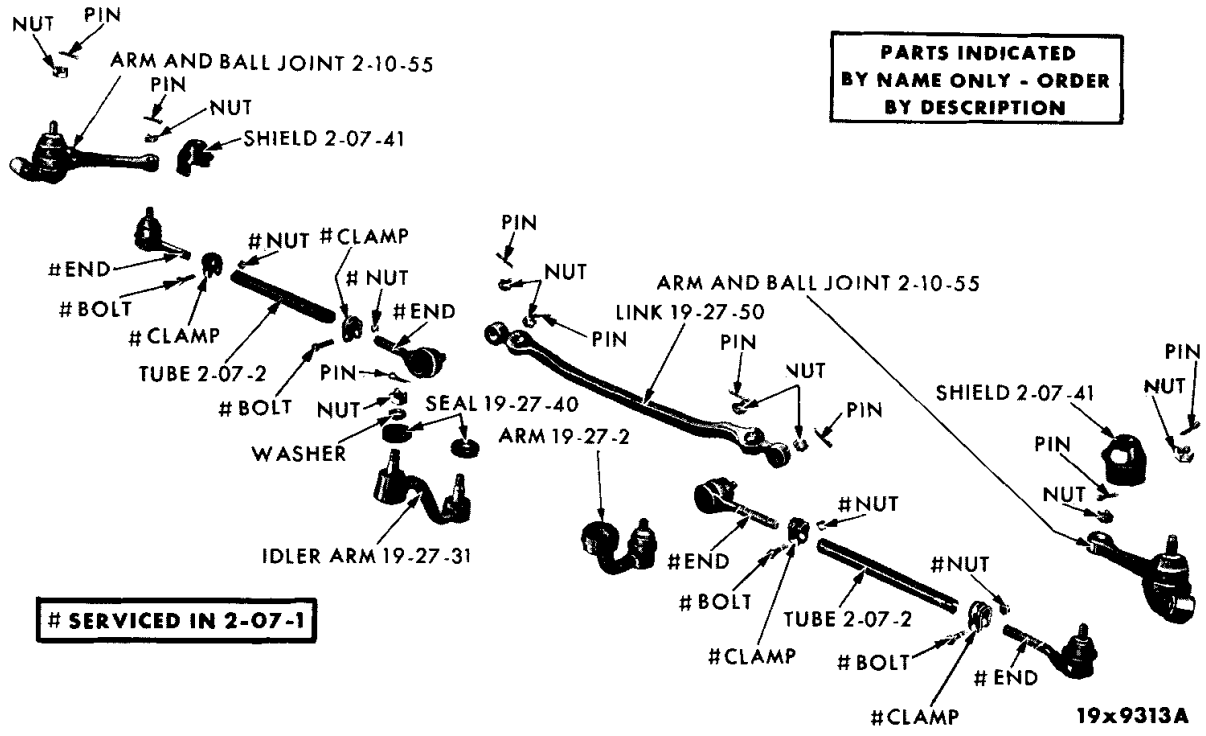

TIE RODS - VALIANT AND DART

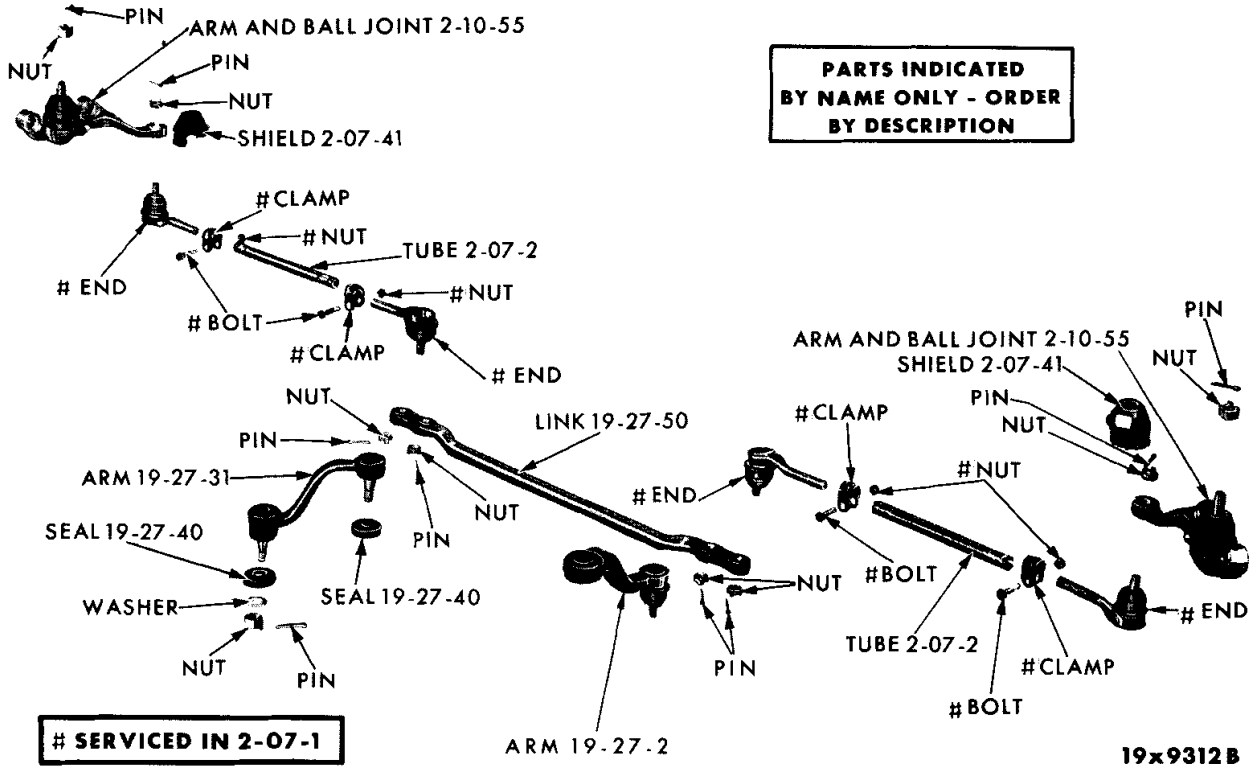

TIE RODS - BELVEDERE AND CORONET

MyMopar.com

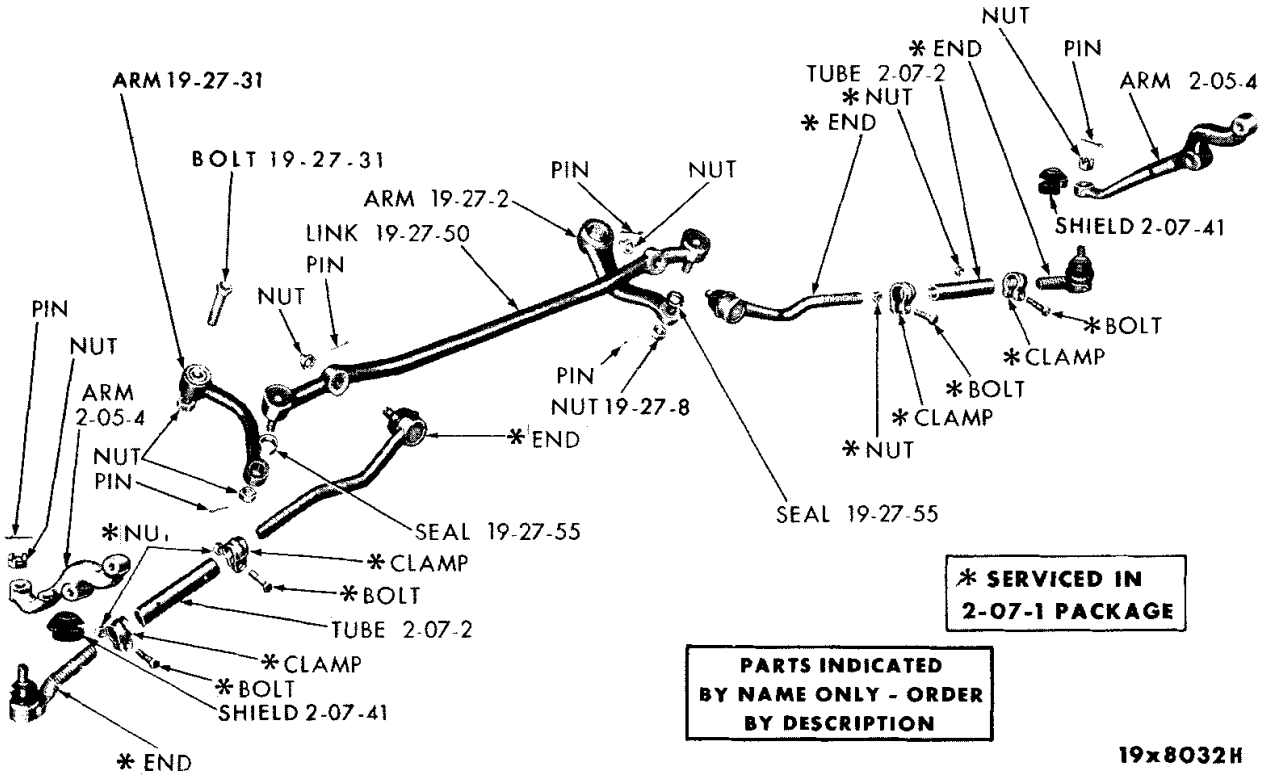

TIE RODS - IMPERIAL

NOTES

MyMopar.com

CODE	PART NAME AND DESCRIPTION	CYL	PER CAR	VALIANT / DART	PLYMOUTH BELVEDERE / DODGE CORONET	PLYMOUTH FURY / DODGE POLARA / CHRYSLER	IMPERIAL
2-03-0	**STEERING KNUCKLE**						
2-03-3	KNUCKLE, w/o 10" Brakes		1	2071 432-3			
	w/10" Brakes		1	2071 650-1			
	w/o Disc Brakes		2	---- ---	1858 084	2269 129	2207 033
	w/Disc Brakes, Right	8	1	---- ---	---- ---	2462 670	
	Left	8	1	---- ---	---- ---	2462 589	
	w/Disc Brakes		1	2269 790-1			
2-05-0	**STEERING LINKAGE KNUCKLE ARM**						
2-05-4	ARM		1	---- ---	---- ---	---- ---	2269 356-7
2-07-0	**STEERING KNUCKLE TIE ROD**						
2-07-1	END PACKAGE, Inner, L. H. thd.		2	2525 417	2525 417		
	Outer, R. H. thd.		2	2525 416	2525 416		
	Inner, 8 1/4" lgh., approx., UP TO March 1, 1965		2	---- ---	---- ---	2525 073	
	Outer, 4 1/2" lgh., approx., UP TO March 1, 1965		2	---- ---	---- ---	2525 074	
	Inner, 4 1/2" lgh., approx., AFTER March 1, 1965		2	---- ---	---- ---	2585 500	
	Outer, 4 1/2" lgh., approx., AFTER March 1, 1965		2	---- ---	---- ---	2585 501	
	Inner, Right	8	1	---- ---	---- ---	---- ---	2495 040
	Inner, Left	8	1	---- ---	---- ---	---- ---	2495 039
	Outer, Right	8	1	---- ---	---- ---	---- ---	2495 042
	Outer, Left	8	1	---- ---	---- ---	---- ---	2495 041
2-07-2	TUBE		2	2072 437	2072 437		
	TUBE, w/CLAMP, BOLT and NUT, 4 1/2" lgh.		2	---- ---	---- ---	1634 619	1634 619
	8 11/16" lgh.		2	---- ---	---- ---	2269 786	
2-07-17	PLUG, Steering Link Tie Rod End Cover		★	1858 115	1858 115	1858 115	1858 115
2-07-28	SEAL, Steering Link Tie Rod Dust	8	4	---- ---	---- ---	---- ---	2269 309
2-07-41	SHIELD, Steering Link Outer Tie Rod End Seal		1	1858 262-3	1858 262-3	1858 262-3	1858 262-3
2-08-0	**FRONT WHEEL UPPER CONTROL ARM**						
2-08-5	ARM		1	2071 452-3	1857 856-7	2269 104-5	2207 184-5
2-08-7	BUSHING, Upper Control Arm		4	2071 204	2071 204	2269 124	1825 317
2-08-11	SLEEVE, Upper Control Arm Bushing		2	1857 840	1857 840		
2-08-48	BUMPER, Frame		2	1825 314	1825 314	1825 314	1825 314
2-08-55	NUT, Bumper Bolt		2	6012 031	6012 031	6012 031	6012 031
2-08-57	BALL JOINT PACKAGE, Upper		2	2298 533	2298 534	2298 534	2298 536
2-08-59	CAM and BUSHING PACKAGE, Support Bracket		2	2084 920	2084 920	2525 070	2448 099
2-08-61	SEAL, Ball Joint		2	2071 255	2269 127	2269 127	1825 761
2-08-62	WASHER, Ball Joint Stud Nut		2	---- ---	1672 960	1672 960	1672 960

TYPE LETTERS Indicate: V - Valiant, L - Dart, R - Belvedere, W - Coronet, P - Plymouth, D - Dodge, C - Chrysler, Y - Imperial

★Indicates use as required. Numerals in parentheses ( ) refer to notes. Printed in U.S.A.

⊟Indicates parts not listed in any previous parts book. Prices and specifications subject to change without notice.

* Indicates change or addition. March 1966 Supersedes May 1965.

MyMopar.com

CODE	PART NAME AND DESCRIPTION	CYL	PER CAR	VALIANT / DART	PLYMOUTH BELVEDERE / DODGE CORONET	PLYMOUTH FURY / DODGE POLARA / CHRYSLER	IMPERIAL
2-08-0	**FRONT WHEEL UPPER CONTROL ARM - Cont'd**						
2-08-63	BRACKET, Control Arm Mounting		1	2081 840-1	2204 184-5		
	Right, R2, W2, w/426 cu. in. Eng., Hemispherical	8	1	---- ---	2460 988		
2-08-68	NUT, Ball Joint Stud		2	273 705	---- ---	---- ---	128 027
2-08-70	REINFORCEMENT, Control Arm Mounting Bracket		2	---- ---	2204 244		
2-08-71	NUT, Control Arm Bolt		4	1825 449	1825 449	1825 449	1825 449
2-08-72	PLUG, Upper Ball Joint		2	1858 115	1858 115	1858 115	1858 115
2-10-0	**FRONT WHEEL LOWER CONTROL ARM**						
2-10-6	ARM, Right		1	2071 642	1857 992	2269 132	1858 160
	RIVET, Control Arm Plate, Right		4	6023 293	6023 293		
2-10-7	ARM, Left		1	2071 643	1857 993	2269 133	1858 161
	RIVET, Control Arm Plate, Left		4	*6023 293	*6023 293		
2-10-10	BUMPER		2	2462 578	2462 578	2269 218	1857 682
2-10-17	NUT, Bumper Bolt		2	⊟9416 107	⊟9416 107	6012 031	6012 031
2-10-55	ARM and BALL JOINT PACKAGE, Steering Knuckle Housing, Lower, w/o Disc Brakes		1	*2275 464-5	*2275 462-3	*2525 450-1	
	w/Disc Brakes, Rt.		1	*2585 594			
	Lt.		1	*2585 593			
	BALL JOINT PACKAGE, Lower	8	2	---- ---	---- ---	---- ---	2298 537
2-10-57	BUSHING and RETAINER PACKAGE		2	2084 918	2084 045	2525 083	2084 045
2-10-58	STRUT		2	2071 417	1857 901	2269 245	2207 029
2-10-59	BUSHING, Control Arm Strut		2	2071 443	1734 321	---- ---	1734 321
	Front		2	---- ---	---- ---	2207 282	
	Rear		2	---- ---	---- ---	2207 296	
2-10-60	RETAINER, Strut Bushing		4	2071 211	1734 341	2207 322	1734 341
2-10-61	SHAFT PACKAGE, Control Arm		2	2275 461	2275 460	2525 072	1881 647
2-10-62	BOLT, Control Arm Strut	8	4	---- ---	---- ---	---- ---	1825 350
2-10-63	NUT, Strut Bushing		2	6024 657	6024 565	6025 523	6024 565
	Strut		2	6024 803	6024 803	6024 803	
2-10-64	PLUG, Lower Ball Joint		2	1858 115	1858 115	1858 115	1858 115
2-10-65	SLEEVE, Control Arm Strut Bushing		2	---- ---	---- ---	2207 324	
2-10-66	SEAL, Ball Joint		2	1858 209	1858 209	⊟2269 214	1825 762
2-10-67	WASHER, Ball Joint Stud		2	---- ---	1672 961	1672 961	1672 961
2-10-68	NUT, Ball Joint Stud		2	---- ---	---- ---	128 027	1671 405
2-10-72	SPACER, Bumper, except Sta. Wgn., D2, C1.		2	⊟2071 727	⊟2071 727	2269 292	
2-10-74	WASHER, Control Arm Shaft		2	2071 470	2071 470		
2-10-76	BUSHING, Control Arm Shaft		2	1858 024	1858 024	2269 189	1636 010

TYPE LETTERS Indicate: V - Valiant, L - Dart, R - Belvedere, W - Coronet, P - Plymouth, D - Dodge, C - Chrysler, Y - Imperial

★Indicates use as required. Numerals in parentheses ( ) refer to notes. Printed in U.S.A.

⊟Indicates parts not listed in any previous parts book. Prices and specifications subject to change without notice.

March 1966 Supersedes May 1965. * Indicates change or addition.

MyMopar.com

CODE	PART NAME AND DESCRIPTION	CYL	PER CAR	VALIANT / DART	PLYMOUTH BELVEDERE / DODGE CORONET	PLYMOUTH FURY / DODGE POLARA / CHRYSLER	IMPERIAL
2-14-0	**FRONT SUSPENSION TORSION PARTS**						
2-14-1	BOLT and SWIVEL PACKAGE, Bar or Spring, Front End Anchor Adjusting, Std.		2	2275 469	2275 468		
	Heavy Duty		2	2275 470	2275 469		
	P		2	---- ---	---- ---	2525 086	
	D, C	8	2	---- ---	---- ---	2525 087	2196 774
	NOTE: The Anchor End of Torsion Bars or Springs, are stamped with the last 3 digits of the part number, if the stamped number is 622, the Torsion Bar or Spring will be applicable to the right side of the car, the last digit being an even number. Left side is indicated by an odd digit.						
2-14-3	BAR or SPRING, Std.	6	1	2071 622-3			
	Std.	8	1	⊟2535 890-1			
	Std. except Sta. Wgn., w/o Sway Bar	6	1	---- ---	1857 774-5		
	Std., Sta. Wgn., w/Sway BAR	6	1	---- ---	1857 776-7		
	Std., w/o Sway Bar	8	1	---- ---	1857 776-7		
	Std., P1, except Sta. Wgn.	6	1	---- ---	---- ---	2269 576-7	
	Std., P2, except Sta. Wgn., w/318 cu. in. Eng.	8	1	---- ---	---- ---	2269 578-9	
	Std., P2, except Sta. Wgn., w/383 and 426 cu. in. Eng.	8	1	---- ---	---- ---	2269 578-9	
	Std., P, Sta. Wgn.		1	---- ---	---- ---	2269 574-5	
	Std., D	8	1	---- ---	---- ---	2269 618-9	
	w/Air Conditioning, D	8	1	---- ---	---- ---	2269 620-1	
	Std., C	8	1	---- ---	---- ---	2269 620-1	
	Std.	8	1	---- ---	---- ---	---- ---	2275 508-9
	Heavy Duty		1	⊟2535 892-3			
	Heavy Duty, except Sta. Wgn., w/o Sway Bar	6	1	---- ---	1857 778-9		
	Heavy Duty, except Sta. Wgn., w/Sway BAR	6	1	---- ---	1857 776-7		
	Heavy Duty, w/o Sway Bar	8	1	---- ---	1857 778-9		
	Heavy Duty, w/Sway BAR	8	1	---- ---	1857 776-7		
	Heavy Duty, P		1	---- ---	---- ---	2269 578-9	
	Heavy Duty, D	8	1	---- ---	---- ---	2269 622-3	
	Heavy Duty or w/Air Conditioning, C	8	1	---- ---	---- ---	2269 622-3	
	Heavy Duty	8	1	---- ---	---- ---	---- ---	2275 510-11
2-14-8	ANCHOR PACKAGE, Torsion Bar or Spring, Rear End, except Cv. Cp.	8	1	---- ---	---- ---	---- ---	2196 754-5
	Cv. Cp.	8	1	---- ---	---- ---	---- ---	2196 752-3
2-14-12	SEAT, Front Spring Rear Anchor Adjusting Bolt	8	2	---- ---	---- ---	---- ---	1857 549
2-14-13	SEAL, Front Spring Rear End Anchor, P		2	2071 173	2071 173	2269 250	1613 388
	D, C, UP TO Serial No. 246510		2	---- ---	---- ---	*2269 260	
	D, C, AFTER Serial No. 246510	8	2	---- ---	---- ---	*2269 250	
2-14-14	CLAMP, Front Spring Rear End Anchor, D, C	8	2	---- ---	---- ---	2269 234	
2-14-15	LOCK, Front Spring Rear End Anchor		2	1671 446	1671 446	1639 171	1639 171
2-14-19	PLUG, Front Spring Rear End Anchor		2	---- ---	---- ---	1825 582	1825 582
2-14-25	RETAINER, Front Spring Rear End Anchor Adjusting	8	2	---- ---	---- ---	---- ---	1857 576

TYPE LETTERS Indicate: V - Valiant, L - Dart, R - Belvedere, W - Coronet, P - Plymouth, D - Dodge, C - Chrysler, Y - Imperial

★Indicates use as required. Numerals in parentheses ( ) refer to notes. Printed in U.S.A.
⊟Indicates parts not listed in any previous parts book. Prices and specifications subject to change without notice.
● Indicates change or addition.

March 1966 Supersedes May 1965.

MyMopar.com

CODE	PART NAME AND DESCRIPTION	CYL	PER CAR	VALIANT / DART	PLYMOUTH BELVEDERE / DODGE CORONET	PLYMOUTH FURY / DODGE POLARA / CHRYSLER	IMPERIAL

NOTES

TYPE LETTERS Indicate: V - Valiant, L - Dart, R - Belvedere, W - Coronet, P - Plymouth, D - Dodge, C - Chrysler, Y - Imperial

★Indicates use as required. Numerals in parentheses ( ) refer to notes. Printed in U.S.A.

⊟Indicates parts not listed in any previous parts book. Prices and specifications subject to change without notice.

Nov. 30, 1964 Supersedes Sept. 4, 1964.

MyMopar.com

GROUP 3 - AXLE - REAR

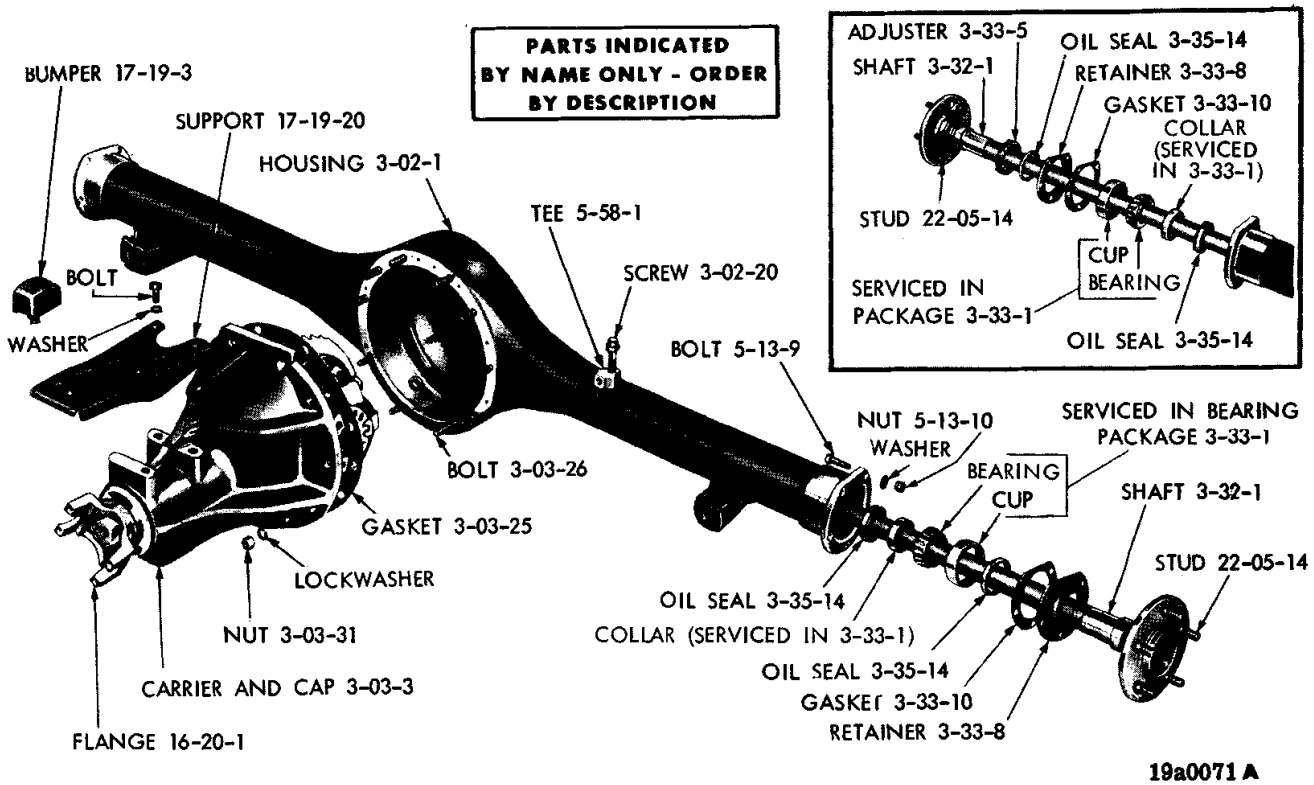

REAR AXLE HOUSING AND CARRIER - EXCEPT VALIANT AND DART

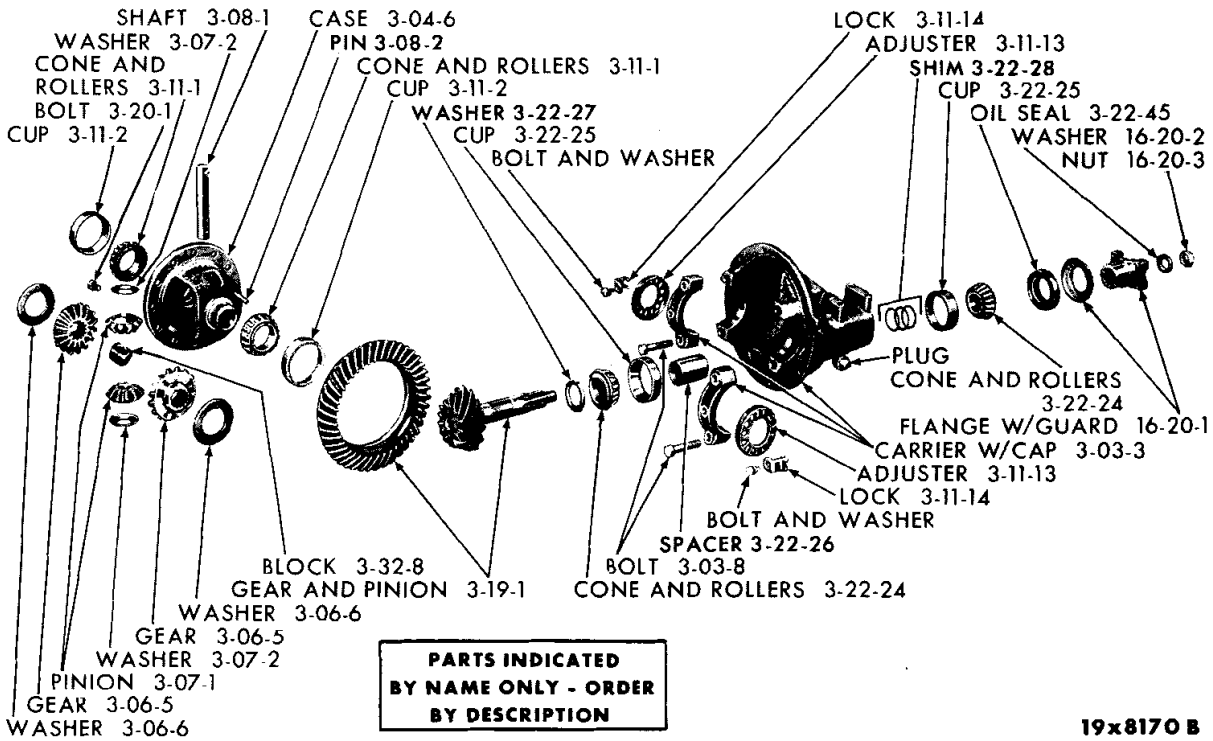

REAR AXLE DIFFERENTIAL - EXCEPT VALIANT AND DART

MyMopar.com

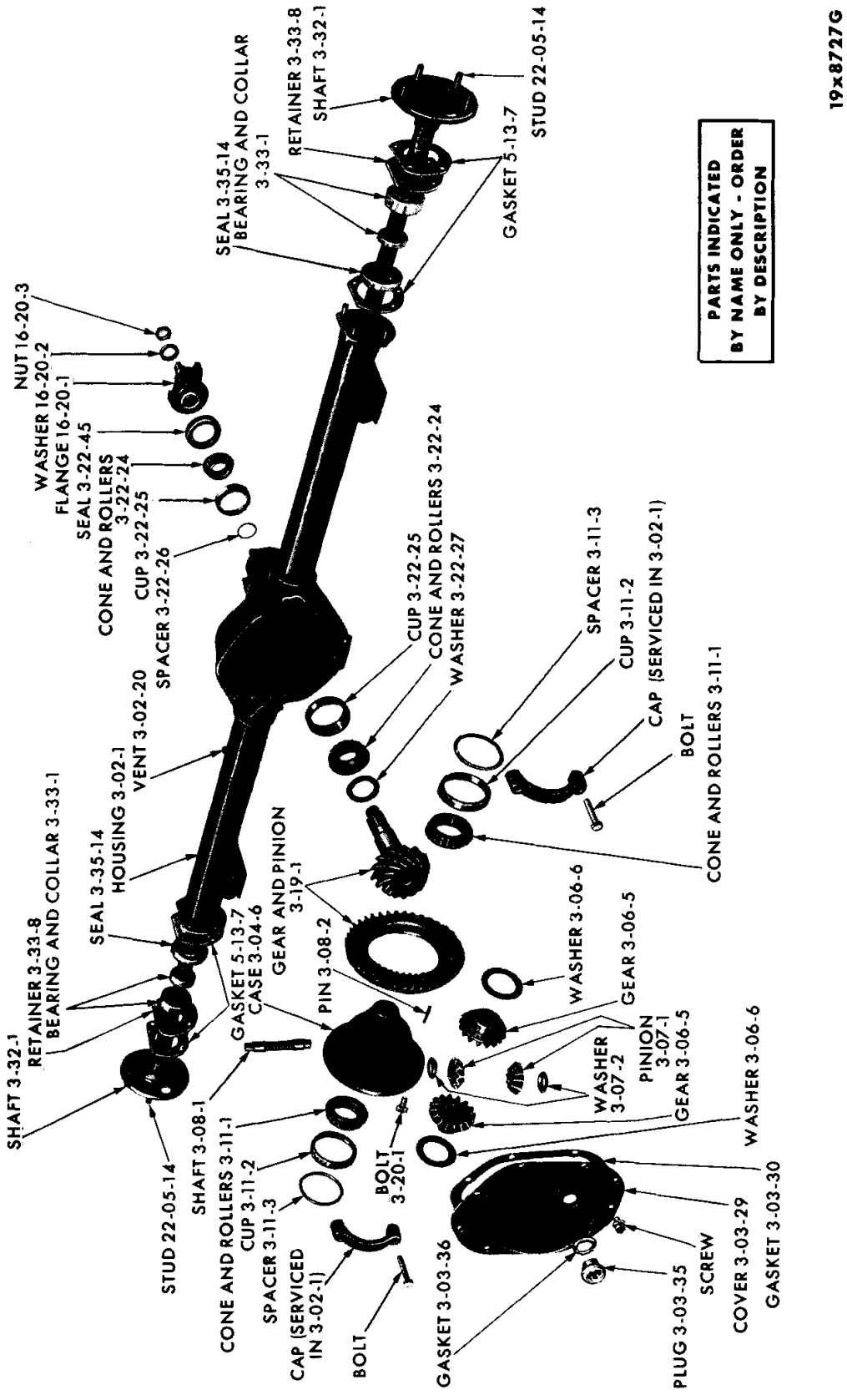

REAR AXLE DIFFERENTIAL AND CARRIER - VALIANT AND DART

MyMopar.com

19x8320D

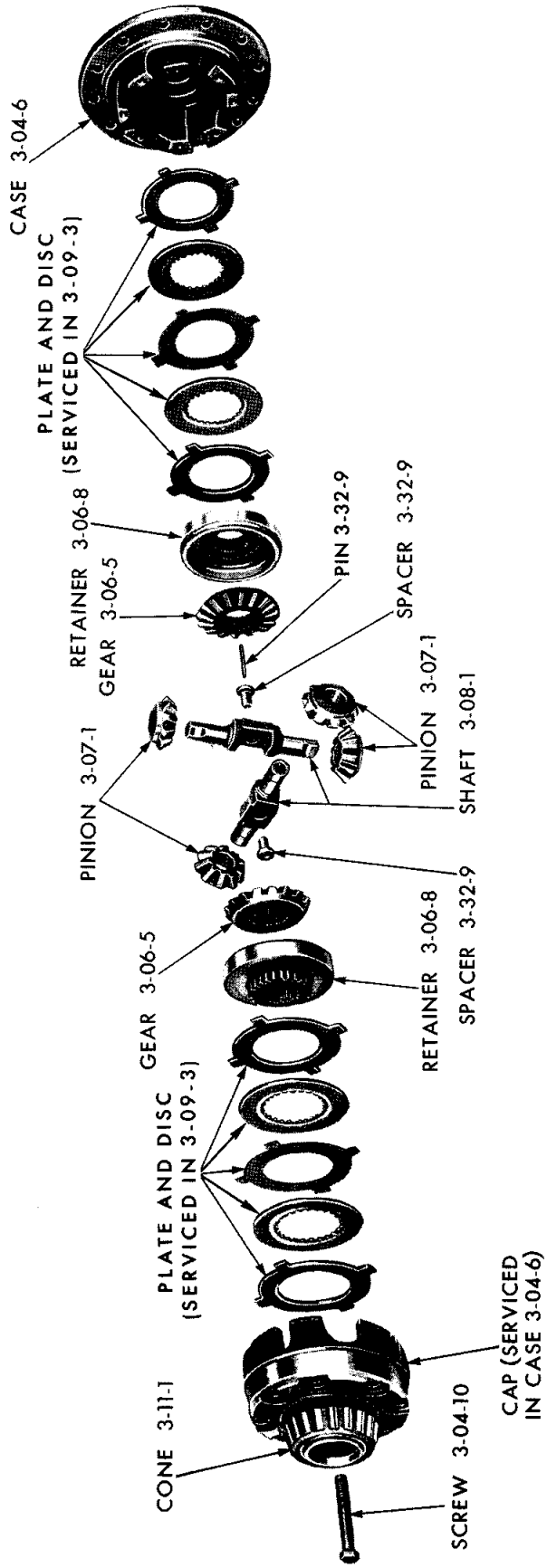

"SURE-GRIP" REAR AXLE DIFFERENTIAL

MyMopar.com

CODE	PART NAME AND DESCRIPTION	CYL	PER CAR	VALIANT / DART	PLYMOUTH BELVEDERE / DODGE CORONET	PLYMOUTH FURY / DODGE POLARA / CHRYSLER	IMPERIAL

NOTES

TYPE LETTERS Indicate:

V - Valiant	R - Belvedere	P - Plymouth	C - Chrysler
L - Dart	W - Coronet	D - Dodge	Y - Imperial

★Indicates use as required.

⊟Indicates parts not listed in any previous parts book.

Printed in U.S.A.

Prices and specifications subject to change without notice.

MyMopar.com

NOTE: Two Types of Differentials are being used in production on 8 cylinder cars. With 1 3/8" diameter pinion shaft, the Carrier has part number 1820 657 or 2070 741 embossed 2 inches below the yoke. With 1 3/4" diameter pinion shaft, the Carrier has part number 1634 985 or 2070 742 embossed 2 inches below the yoke.

CODE	PART NAME AND DESCRIPTION	CYL	PER CAR	VALIANT / DART	PLYMOUTH BELVEDERE / DODGE CORONET	PLYMOUTH FURY / DODGE POLARA / CHRYSLER	IMPERIAL
3-01-0	**REAR AXLE CONTROL STRUT**						
3-01-25	STRUT		1	---- ---	---- ---	---- ---	1730 160
3-01-28	BUSHING		1	---- ---	---- ---	---- ---	1635 600
3-01-30	SPACER, UP TO Ser. No. 129749		★	---- ---	---- ---	---- ---	1731 769
	AFTER Ser. No. 129749		★	---- ---	---- ---	---- ---	2462 334
3-01-33	HANGER, w/BOLTS, UP TO Ser. No. 129749		2	---- ---	---- ---	---- ---	2403 248
	AFTER Ser. No. 129749		2	---- ---	---- ---	---- ---	2462 337
	BRACKET, Frame, Rt.		1	---- ---	---- ---	---- ---	1829 998
	Lt.		1	---- ---	---- ---	---- ---	1829 999
3-01-34	BOLT, Hanger		8	---- ---	---- ---	---- ---	2403 247
	WASHER		8	---- ---	---- ---	---- ---	6022 190
3-02-0	**REAR AXLE HOUSING**						
3-02-1	HOUSING		1	⊟2467 414			
			1	---- ---	2404 143	2404 229	2404 208
3-02-20	SCREW, Vent		1	2404 119	2404 119	2404 119	2124 715
3-03-0	**REAR AXLE DIFFERENTIAL AND CARRIER**						
3-03-1	DIFFERENTIAL, w/CARRIER and TUBES,						
	2.93 to 1 ratio		1	2467 327			
	3.23 to 1 ratio		1	2467 328			
	3.55 to 1 ratio	6	1	2467 138			
	3.91 to 1 ratio	6	1	*2643 134			
	3.55 to 1 ratio	8	1	2467 142			
	2.93 to 1 ratio, w/Sure-Grip		1	2467 329			
	3.23 to 1 ratio, w/Sure-Grip		1	2467 330			
	2.93 to 1 ratio, w/8 1/4" dia. Gear, except Sta. Wgn.	6	1	---- ---	2404 289		
	3.31 to 1 ratio, w/8 1/4" dia. Gear, except Sta. Wgn.	6	1	---- ---	2404 290		
	2.94 to 1 ratio, w/8 3/4" dia. Gear, P, D2-L, w/318 cu. in. Engine, C1, C2		1	---- ---	⊟2800 065	⊟2800 065	
	3.23 to 1 ratio, w/8 3/4" dia. Gear, P, D, C1		1	---- ---	2404 334	2404 334	
	3.55 to 1 ratio, w/ 8 3/4" dia. Gear, 1 3/8" dia. Stem, P, D2-L w/318 cu. in. Engine		1	---- ---	*2404 335	*2404 335	
	3.91 to 1 ratio, w/8 3/4" dia. Gear, 1 3/8" dia. Stem		1	---- ---	2404 313		
	2.76 to 1 ratio, w/8 3/4" dia. Gear, 1 3/4" dia. Stem, P2, D2, C	8	1	---- ---	2404 332	2404 332	
	3.55 to 1 ratio, w/ 8 3/4" dia. Gear, 1 3/4" dia. Stem, P, D2		1	---- ---	---- ---	2404 335	
	2.76 to 1 ratio, w/Sure-Grip, 8 3/4" dia. Gear, 1 3/8" dia. Stem	8	1	---- ---	2070 693		
	3.23 to 1 ratio, w/Sure-Grip, 8 3/4" dia. Gear, 1 3/8" dia. Stem		1	---- ---	2070 774		

TYPE LETTERS Indicate: V - Valiant, L - Dart, R - Belvedere, W - Coronet, P - Plymouth, D - Dodge, C - Chrysler, Y - Imperial

★Indicates use as required. Numerals in parentheses ( ) refer to notes. Printed in U.S.A.
⊟Indicates parts not listed in any previous parts book. Prices and specifications subject to change without notice.
* Indicates change or addition.

March 1966 Supersedes May 1965.
MyMopar.com

CODE	PART NAME AND DESCRIPTION	CYL	PER CAR	VALIANT / DART	PLYMOUTH BELVEDERE / DODGE CORONET	PLYMOUTH FURY / DODGE POLARA / CHRYSLER	IMPERIAL
3-03-0	**REAR AXLE DIFFERENTIAL AND CARRIER - Cont'd**						
3-03-1	DIFFERENTIAL, w/CARRIER and TUBES - Cont'd						
	2.94 to 1 ratio, w/Sure-Grip, 8 3/4" dia. Gear, 1 3/8" dia. Stem		1	---- ---	E2800 059		
	2.76 to 1 ratio, w/Sure-Grip, 8 3/4" dia. Gear, 1 3/4" dia. Stem, P, D2, C1, C2, C3 except Sta. Wgn.	8	1	---- ---	---- ---	2404 490	
	3.23 to 1 ratio, w/Sure-Grip, 8 3/4" dia. Gear, 1 3/4" dia. Stem		1	---- ---	2404 492	2404 492	
	3.91 to 1 ratio, w/Sure-Grip, 8 3/4" dia. Gear, 1 3/4" dia. Stem	8	1	---- ---	2404 493		
	4.56 to 1 ratio, w/Sure-Grip, 8 3/4" dia. Gear, 1 3/4" dia. Stem	8	1	---- ---	2467 085		
	2.94 to 1 ratio, 8 3/4" dia. Gear, 1 3/4" dia. Stem		1	---- ---	---- ---	---- ---	E2800 065
	2.93 to 1 ratio, w/Sure-Grip, 8 3/4" dia. Gear, 1 3/4" dia. Stem		1	---- ---	---- ---	---- ---	2467 362
3-03-2	DIFFERENTIAL, Partial, w/Sure-Grip		1	2404 390	2070 824	2070 824	2070 824
3-03-3	CARRIER, w/CAPS, w/8 1/4" dia. Gear, except Sta. Wgn.	6	1	---- ---	2070 782		
	w/8 3/4" dia. Gear, w/1 3/8" dia. Stem, D2, C1, except Sta. Wgn., P		1	---- ---	1820 698	1820 698	
	w/8 3/4" dia. Gear, w/1 3/4" dia Stem		1	---- ---	1634 984	1634 984	1634 984
3-03-8	SCREW, Cap		4	---- ---	314 948	314 948	314 948
3-03-25	GASKET, Carrier		1	---- ---	1673 367	1673 367	1673 367
3-03-26	BOLT, Housing to Carrier		★	---- ---	1135 197	1135 197	1135 197
			1	---- ---	---- ---	---- ---	2404 480
3-03-29	COVER, Carrier		1	2070 119			
3-03-30	GASKET, Cover		1	2070 120			
3-03-31	NUT, Housing to Carrier Bolt		★	---- ---	1485 066	1485 066	1485 066
3-03-35	PLUG, Carrier Cover Filler, 7/8"-18		1	*1392 371			
3-03-36	GASKET, Plug		1	2070 122			
3-04-0	**DIFFERENTIAL CASE**						
3-04-6	CASE, UP TO approx. Ser. No. 564338	6	1	2070 537			
	AFTER approx. Ser. No. 564338	6	1	2404 193			
		8	1	2404 193			
	w/Sure-Grip		1	2404 414			
	w/2.93 to 1 ratio, w/8 1/4" dia. Gear, except Sta. Wgn.	6	1	---- ---	2070 704		
	w/3.31 to 1 ratio, w/8 1/4" dia. Gear, except Sta. Wgn.	6	1	---- ---	2070 706		
	w/8 3/4" dia. Gear		1	---- ---	1850 370	1850 370	1850 370
	w/Sure-Grip		1	---- ---	2240 222	2240 222	2240 222
3-04-10	SCREW, Case Cap, w/Sure-Grip		8	2404 421	1945 751	1945 751	1945 751
3-06-0	**DIFFERENTIAL SIDE GEAR**						
3-06-5	GEAR, UP TO approx. Ser. No. 564338	6	2	2070 023			
	AFTER approx. Ser. No. 564338	6	2	2404 194			
		8	2	2404 194			

TYPE LETTERS Indicate: V - Valiant, L - Dart, R - Belvedere, W - Coronet, P - Plymouth, D - Dodge, C - Chrysler, Y - Imperial

★Indicates use as required. Numerals in parentheses ( ) refer to notes. Printed in U.S.A.

⊟Indicates parts not listed in any previous parts book. Prices and specifications subject to change without notice.

March 1966 Supersedes May 1965. * Indicates change or addition.

MyMopar.com

CODE	PART NAME AND DESCRIPTION	CYL	PER CAR	VALIANT / DART	PLYMOUTH BELVEDERE / DODGE CORONET	PLYMOUTH FURY / DODGE POLARA / CHRYSLER	IMPERIAL
3-06-0	**DIFFERENTIAL SIDE GEAR - Cont'd**						
3-06-5	GEAR - Cont'd						
	w/Sure-Grip		2	2404 418			
	w/8 1/4" dia. Gear, except Sta. Wgn.	6	2	---- ---	2404 206		
	w/8 3/4" dia. Gear, Flange dia. 1.686		2	---- ---	2404 202	2404 202	2404 202
	w/8 3/4" dia. Gear, Flange dia. 1.688		2	---- ---	2404 203	2404 203	2404 203
	w/Sure-Grip		2	---- ---	1829 448	1829 448	1829 448
3-06-6	WASHER, Thrust, UP TO approx.						
	Ser. No. 564338	6	2	2070 024			
	AFTER approx. Ser. No. 564338	6	2	2404 196			
		8	2	2404 196			
	w/8 1/4" dia. Gear, except Sta. Wgn.	6	1	---- ---	2070 820		
	w/8 3/4" dia. Gear		2	---- ---	1633 960	1633 960	1633 960
3-06-8	RETAINER, w/Sure-Grip		2	2404 417	1829 447	1829 447	1829 447
3-07-0	**DIFFERENTIAL PINION**						
3-07-1	PINION, UP TO approx. Ser. No. 564338	6	2	2070 025			
	AFTER approx. Ser. No. 564338	6	2	2404 195			
		8	2	2404 195			
	w/Sure-Grip		2	2404 419	1829 449	1829 449	1829 449
	w/8 1/4' dia. Gear, except Sta. Wgn.	6	2	---- ---	1326 219		
	w/8 3/4" dia. Gear		2	---- ---	1633 959	1633 959	1633 959
3-07-2	WASHER, UP TO approx. Ser. No. 564338	6	2	2070 026			
	AFTER approx. Ser. No. 564338	6	2	2404 197			
		8	2	2404 197			
	w/8 1/4" dia. Gear, except Sta. Wgn.	6	2	---- ---	2070 821		
	w/8 3/4" dia. Gear		2	---- ---	1633 961	1633 961	1633 961
3-08-0	**DIFFERENTIAL PINION SHAFT**						
3-08-1	SHAFT, UP TO approx. Ser. No. 564338	6	1	2070 027			
	AFTER approx. Ser. No. 564338	6	1	2404 198			
		8	1	2404 198			
	w/Sure-Grip		2	2404 420			
	w/8 1/4" dia. Gear, except Sta. Wgn.	6	1	---- ---	663 480		
	w/8 3/4" dia. Gear		1	---- ---	*1633 928	*1633 928	*1633 928
	w/Sure-Grip		2	---- ---	1829 446	1829 446	1829 446
3-08-2	PIN, Lock		2	152 229			
			1	---- ---	1633 937	1633 937	1633 937
3-09-0	**DIFFERENTIAL CLUTCH PARTS**						
3-09-3	REPAIR KIT, Differential, w/Sure-Grip		1	2404 427	2070 845	2070 845	2070 845
3-11-0	**DIFFERENTIAL BEARINGS**						
3-11-1	CONE, w/ROLLERS		2	1937 771			
	w/8 1/4" dia. Gear, except Sta. Wgn.	6	2	---- ---	698 404		
	w/8 3/4" dia. Gear		2	---- ---	1790 523	1790 523	1790 523
3-11-2	CUP		2	1937 770	698 403	698 403	698 403
3-11-3	SPACER, Adjusting, .2500" thk.		★	2070 848			
	.2520" thk.		★	2070 849			
	.2540" thk.		★	2070 082			
	.2560" thk.		★	2070 441			
	.2580" thk.		★	2070 442			
	.2600" thk.		★	2070 084			
	.2620" thk.		★	2070 443			

TYPE LETTERS Indicate: V - Valiant, L - Dart, R - Belvedere, W - Coronet, P - Plymouth, D - Dodge, C - Chrysler, Y - Imperial

★Indicates use as required. Numerals in parentheses ( ) refer to notes. Printed in U.S.A.
⊟Indicates parts not listed in any previous parts book. Prices and specifications subject to change without notice.
* Indicates change or addition. March 1966 Supersedes May 1965.

MyMopar.com

CODE	PART NAME AND DESCRIPTION	CYL	PER CAR	VALIANT / DART	PLYMOUTH BELVEDERE / DODGE CORONET	PLYMOUTH FURY / DODGE POLARA / CHRYSLER	IMPERIAL
3-11-0	**DIFFERENTIAL BEARINGS - Cont'd**						
3-11-3	SPACER - Cont'd						
	.2640" thk.		★	2070 444			
	.2660" thk.		★	2070 086			
	.2680" thk.		★	2070 445			
	.2700" thk.		★	2070 446			
	.2720" thk.		★	2070 088			
	.2740" thk.		★	2070 447			
	.2760" thk.		★	2070 448			
	.2780" thk.		★	2070 090			
	.2800" thk.		★	2070 449			
	.2820" thk.		★	2070 450			
	.2840" thk.		★	2070 092			
	.2860" thk.		★	2070 696			
	.2880" thk.		★	2070 697			
	.2900" thk.		★	2070 698			
	.2920" thk.		★	2070 850			
	.2940" thk.		★	2070 851			
3-11-13	ADJUSTER		2	---- ---	601 864	601 864	601 864
3-11-14	LOCK, Adjuster		2	---- ---	308 247	308 247	308 247
3-19-0	**DRIVE GEAR AND PINION SET**						
3-19-1	GEAR and PINION SET, 2.93 to 1 ratio	6	1	2467 132			
	3.23 to 1 ratio	6	1	2467 326			
	3.55 to 1 ratio		1	2467 134			
	3.91 to 1 ratio	6	1	2467 135			
	2.93 to 1 ratio, w/Sure-Grip	6	1	2467 325			
	3.23 to 1 ratio, w/Sure-Grip	6	1	2467 326			
	2.93 to 1 ratio	8	1	2467 325			
	3.23 to 1 ratio	8	1	2467 326			
	2.93 to 1 ratio, 8 1/4" dia. Gear, except Sta. Wgn.	6	1	---- ---	2070 808		
	3.31 to 1 ratio, 8 1/4" dia. Gear, except Sta. Wgn.	6	1	---- ---	2070 809		
	2.93 to 1 ratio, 8 3/4" dia. Gear, 1 3/8" dia. Stem, P, D2-L w/318 cu. in. Eng.		1	---- ---	2070 569	2070 569	
	3.23 to 1 ratio, 8 3/4" dia. Gear, 1 3/8" dia. Stem, P, D2, C1		1	---- ---	2070 816	2070 816	
	3.55 to 1 ratio, 8 3/4" dia. Gear, 1 3/8" dia. Stem, P, D2-L w/318 cu. in. Eng.		1	---- ---	2070 915	2070 915	
	3.91 to 1 ratio, 8 3/4" dia. Gear, 1 3/8" dia. Stem		1	---- ---	2070 300		
	2.76 to 1 ratio, 8 3/4" dia. Gear, 1 3/8" dia. Stem	8	1	---- ---	2070 689		
	2.93 to 1 ratio, 8 3/4" dia. Gear, 1 3/4" dia. Stem, P, D2, C1, C2		1	---- ---	⊟2643 120	⊟2643 120	⊟2643 120
	3.55 to 1 ratio, 8 3/4" dia Gear, 1 3/4" dia. Stem P, D2		1	---- ---	---- ---	2070 916	
	2.76 to 1 ratio, 8 3/4" dia. Gear, 1 3/4" dia. Stem	8	1	---- ---	*2070 690	*2070 690	
	3.23 to 1 ratio, 8 3/4" dia., Gear, 1 3/4" dia. Stem		1	---- ---	2070 817	2070 817	
	3.91 to 1 ratio, 8 3/4" dia. Gear, 1 3/4" dia. Stem	8	1	---- ---	2404 127		
	4.56 to 1 ratio, 8 3/4" dia. Gear, 1 3/4" dia. Stem	8	1	---- ---	1738 823		

TYPE LETTERS Indicate: V - Valiant, L - Dart, R - Belvedere, W - Coronet, P - Plymouth, D - Dodge, C - Chrysler, Y - Imperial

★Indicates use as required. Numerals in parentheses ( ) refer to notes. Printed in U.S.A.

⊟Indicates parts not listed in any previous parts book. Prices and specifications subject to change without notice.

March 1966 Supersedes May 1965. * Indicates change or addition.

MyMopar.com

CODE	PART NAME AND DESCRIPTION	CYL	PER CAR	VALIANT / DART	PLYMOUTH BELVEDERE / DODGE CORONET	PLYMOUTH FURY / DODGE POLARA / CHRYSLER	IMPERIAL
3-20-0	**DRIVE GEAR BOLT**						
3-20-1	BOLT		12	*1675 485	*1675 485	*1675 485	*1675 485
	w/Sure-Grip		12	1945 768	1945 768	1945 768	1945 768
3-22-0	**DRIVE PINION BEARINGS**						
3-22-24	CONE, Front Bearing, w/ROLLERS		1	2070 316			
	Rear		1	2070 318			
	Front, w/1 3/8" dia. Stem, D2, C1, except Sta. Wgn., P		1	---- ---	1820 552	1820 552	
	Rear, w/1 3/8" dia. Stem, D2, C1, except Sta. Wgn., P		1	---- ---	1401 809	1401 809	
	Front, w/1 3/4" dia. Stem		1	---- ---	1401 808	1401 808	1401 808
	Rear, w/1 3/4" dia. Stem		1	---- ---	1404 472	1404 472	1404 472
3-22-25	CUP, Front Bearing		1	2070 317			
	Rear		1	2070 319			
	Front, w/1 3/8" dia. Stem, D2, C1, except Sta. Wgn., P		1	---- ---	1820 551	1820 551	
	Rear, w/1 3/8" dia. Stem, D2, C1, except Sta. Wgn., P		1	---- ---	1401 810	1401 810	
	Front, w/1 3/4" dia. Stem		1	---- ---	1401 810	1401 810	1401 810
	Rear, w/1 3/4" dia. Stem		1	---- ---	1327 847	1327 847	1327 847
3-22-26	SPACER, Front Bearing Adjusting, .074" thk.		★	2070 094			
	.075" thk.		★	2070 454			
	.076" thk.		★	2070 095			
	.077" thk.		★	2070 455			
	.078" thk.		★	2070 096			
	.079" thk.		★	2070 456			
	.080" thk.		★	2070 097			
	.081" thk.		★	2070 457			
	.082" thk.		★	2070 098			
	.083" thk.		★	2070 458			
	.084" thk		★	2070 099			
	.085" thk.		★	2070 459			
	.086" thk.		★	2070 100			
	.087" thk.		★	2070 460			
	.088" thk.		★	2070 101			
	.089" thk.		★	2070 461			
	.090" thk.		★	2070 102			
	.091" thk.		★	2070 462			
	.092" thk.		★	2070 103			
	.093" thk.		★	2070 463			
	.094" thk.		★	2070 104			
	.095" thk.		★	2070 464			
	.096" thk.		★	2070 105			
	.097" thk.		★	2070 465			
	.098" thk.		★	2070 106			
	.099" thk.		★	2070 466			
	.100" thk.		★	2070 107			
	.101" thk.		★	2070 467			
	.102" thk.		★	2070 108			
	.103" thk.		★	2070 468			
	.104" thk.		★	2070 109			
	.105" thk.		★	2070 469			
	.106" thk.		★	2070 110			

TYPE LETTERS Indicate: V - Valiant, L - Dart, R - Belvedere, W - Coronet, P - Plymouth, D - Dodge, C - Chrysler, Y - Imperial

★Indicates use as required. Numerals in parentheses ( ) refer to notes. Printed in U.S.A.

⊟Indicates parts not listed in any previous parts book. Prices and specifications subject to change without notice.

* Indicates change or addition.

MyMopar.com

March 1966 Supersedes May 1965.

CODE	PART NAME AND DESCRIPTION	CYL	PER CAR	VALIANT / DART	PLYMOUTH BELVEDERE / DODGE CORONET	PLYMOUTH FURY / DODGE POLARA / CHRYSLER	IMPERIAL
3-22-0	**DRIVE PINION BEARINGS - Cont'd**						
3-22-26	SPACER, Rear Bearing, w/8 1/4" dia. Stem, except Sta. Wgn.	6	1	---- ---	2070 709		
	w/8 3/4" dia. Gear, 1 3/8" dia. Stem, D2, C1, except Sta. Wgn., P		1	---- ---	1738 826	1738 826	
3-22-27	WASHER, Rear Bearing, .084" thk.		★	1738 794			
	.086" thk.		★	1738 795			
	.088" thk.		★	1738 796			
	.090" thk.		★	1738 797			
	.092" thk.		★	1738 798			
	.094" thk.		★	1738 799			
	.096" thk.		★	1738 800			
	.098" thk.		★	1738 801			
	.100" thk.		★	1738 802			
	w/1 3/8" dia. Stem, .084" thk., D2, C1, except Sta. Wgn., P		★	---- ---	1738 794	1738 794	
	w/1 3/8" dia. Stem, .086" thk., D2, C1, except Sta. Wgn., P		★	---- ---	1738 795	1738 795	
	w/1 3/8" dia. Stem, .088" thk., D2, C1, except Sta. Wgn., P		★	---- ---	1738 796	1738 796	
	w/1 3/8" dia. Stem, .090" thk., D2, C1, except Sta. Wgn., P		★	---- ---	1738 797	1738 797	
	w/1 3/8" dia. Stem, .092" thk., D2, C1, except Sta. Wgn., P		★	---- ---	1738 798	1738 798	
	w/1 3/8" dia. Stem., .094" thk., D2, C1, except Sta. Wgn., P		★	---- ---	1738 799	1738 799	
	w/1 3/8" dia. Stem, .096" thk., D2, C1, except Sta. Wgn., P		★	---- ---	1738 800	1738 800	
	w/1 3/8" dia. Stem, .098" thk., D2, C1, except Sta. Wgn., P		★	---- ---	1738 801	1738 801	
	w/1 3/8" dia. Stem, .100" thk., D2, C1, except Sta. Wgn., P		★	---- ---	1738 802	1738 802	
	w/1 3/4" dia. Stem, .084" thk.		★	---- ---	1738 812	1738 812	1738 812
	w/1 3/4" dia. Stem, .086" thk.		★	---- ---	1738 813	1738 813	1738 813
	w/1 3/4" dia. Stem, .088" thk.		★	---- ---	1738 814	1738 814	1738 814
	w/1 3/4" dia. Stem, .090" thk.		★	---- ---	1738 815	1738 815	1738 815
	w/1 3/4" dia. Stem, .092" thk.		★	---- ---	1738 816	1738 816	1738 816
	w/1 3/4" dia. Stem, .094" thk.		★	---- ---	1738 817	1738 817	1738 817
	w/1 3/4" dia. Stem, .096" thk.		★	---- ---	1738 818	1738 818	1738 818
	w/1 3/4" dia. Stem, .098" thk.		★	---- ---	1738 819	1738 819	1738 819
	w/1 3/4" dia. Stem, .100" thk.		★	---- ---	1738 820	*1738 820	1738 820
3-22-28	SHIM, Front Bearing Adjusting, w/1 3/8" dia. Stem, .014" thk., D2, C1, except Sta Wgn., P		★	---- ---	1820 703	1820 703	
	w/1 3/8" dia. Stem, .016" thk., D2, C1, except Sta. Wgn., P		★	---- ---	1820 704	1820 704	
	w/1 3/8" dia. Stem, .018" thk., D2, C1, except Sta. Wgn., P		★	---- ---	1820 705	1820 705	
	w/1 3/8" dia. Stem, .020" thk., D2, C1, except Sta. Wgn., P		★	---- ---	1820 706	1820 706	
	w/1 3/8" dia. Stem, .022" thk., D2, C1, except Sta. Wgn., P		★	---- ---	1828 725	1828 725	

TYPE LETTERS Indicate: V - Valiant, L - Dart, R - Belvedere, W - Coronet, P - Plymouth, D - Dodge, C - Chrysler, Y - Imperial

★Indicates use as required. Numerals in parentheses ( ) refer to notes. Printed in U.S.A.

⊟Indicates parts not listed in any previous parts book. Prices and specifications subject to change without notice.

MyMopar.com

CODE	PART NAME AND DESCRIPTION	CYL	PER CAR	VALIANT / DART	PLYMOUTH BELVEDERE / DODGE CORONET	PLYMOUTH FURY / DODGE POLARA / CHRYSLER	IMPERIAL
3-22-0	**DRIVE PINION BEARINGS - Cont'd**						
3-22-28	SHIM - Cont'd						
	w/1 3/8" dia. Stem, .024" thk., D2, C1, except Sta. Wgn., P		★	---- ---	1829 440	1829 440	
	w/1 3/8" dia. Stem, .026" thk., D2, C1, except Sta. Wgn., P		★	---- ---	1829 441	1829 441	
	w/1 3/4" dia. Stem, .014" thk.		★	---- ---	1738 805	1738 805	1738 805
	w/1 3/4" dia. Stem, .016" thk.		★	---- ---	1738 806	1738 806	1738 806
	w/1 3/4" dia. Stem, .018" thk.		★	---- ---	1738 807	1738 807	1738 807
	w/1 3/4" dia. Stem, .022" thk.		★	---- ---	1829 442	1829 442	1829 442
	w/1 3/4" dia. Stem, .024" thk.		★	---- ---	1829 443	1829 443	1829 443
	w/1 3/4" dia. Stem, .026" thk.		★	---- ---	1829 444	1829 444	1829 444
3-22-45	OIL SEAL, Front Bearing		1	2070 113			
	Front Bearing, w/1 3/8" dia. Stem, D2, C1, except Sta. Wgn., P		1	---- ---	1738 831	1738 831	
	w/1 3/4" dia. Stem		1	---- ---	*2404 135	*2404 135	*2404 135
3-32-0	**DRIVE SHAFT**						
3-32-1	SHAFT		2	2404 442			
			2	---- ---	2404 233	2404 228	2404 139
3-32-8	BLOCK, Thrust		1	---- ---	2467 268	2467 268	2467 268
3-32-9	SPACER, Thrust Block, w/Sure-Grip		2	---- ---	1829 445	1829 445	1829 445
	PIN, w/Sure-Grip		1	---- ---	273 703	273 703	273 703
3-32-13	PLUG, Shaft Access Hole		2	---- ---	---- ---	---- ---	2404 437
3-33-0	**DRIVE SHAFT BEARINGS**						
3-33-1	BEARING, COLLAR and CUP PACKAGE		2	2421 349	2525 415	2525 415	2525 415
3-33-5	ADJUSTER, Bearing, Right		1	---- ---	2404 160	2404 160	2404 160
3-33-6	LOCK, Adjuster, Right		1	---- ---	2467 166	2467 166	2467 166
3-33-8	RETAINER, Bearing, w/9" Brakes		2	2467 096			
	w/10" Brakes		2	2467 459			
	Right		1	---- ---	2404 115	2404 115	2404 115
	Left		1	---- ---	2404 475	2404 475	2404 475
3-33-10	GASKET, Bearing Retainer		2	---- ---	2070 933	2070 933	2070 933
3-33-11	NUT, Adjuster Lock Bolt		2	---- ---	2404 168	2404 168	2404 168
	Bearing Retainer Bolt		9	---- ---	1927 232	1927 232	1927 232
3-35-0	**DRIVE SHAFT OIL SEAL**						
3-35-14	OIL SEAL, Bearing		2	2404 052			
	Inner		2	---- ---	2404 215	2404 215	2404 215
	Outer		2	---- ---	2404 216	2404 216	2404 216

TYPE LETTERS Indicate: V - Valiant, L - Dart, R - Belvedere, W - Coronet, P - Plymouth, D - Dodge, C - Chrysler, Y - Imperial

★Indicates use as required.
⊟Indicates parts not listed in any previous parts book.
* Indicates change or addition.

Printed in U.S.A.
Prices and specifications subject to change without notice.

March 1966 Supersedes May 1965.

MyMopar.com

CODE	PART NAME AND DESCRIPTION	CYL	PER CAR	VALIANT / DART	PLYMOUTH BELVEDERE / DODGE CORONET	PLYMOUTH FURY / DODGE POLARA / CHRYSLER	IMPERIAL

NOTES

TYPE LETTERS Indicate: V - Valiant, L - Dart, R - Belvedere, W - Coronet, P - Plymouth, D - Dodge, C - Chrysler, Y - Imperial

★Indicates use as required. Numerals in parentheses ( ) refer to notes. Printed in U.S.A.

⊟Indicates parts not listed in any previous parts book. Prices and specifications subject to change without notice.

Nov. 30, 1964 Supersedes Sept. 4, 1964.

MyMopar.com

GROUP 4 - BRAKE-PARKING

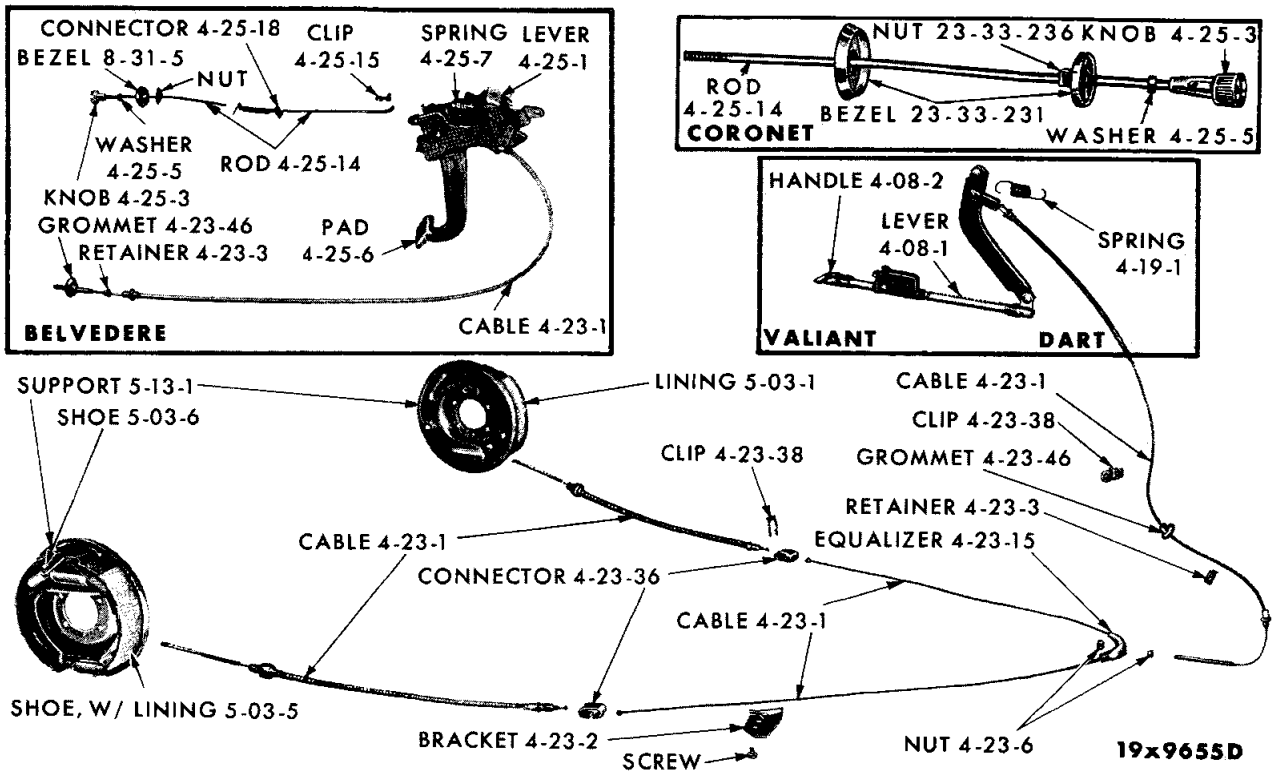

PARKING BRAKE SYSTEM - VALIANT, DART, BELVEDERE AND CORONET

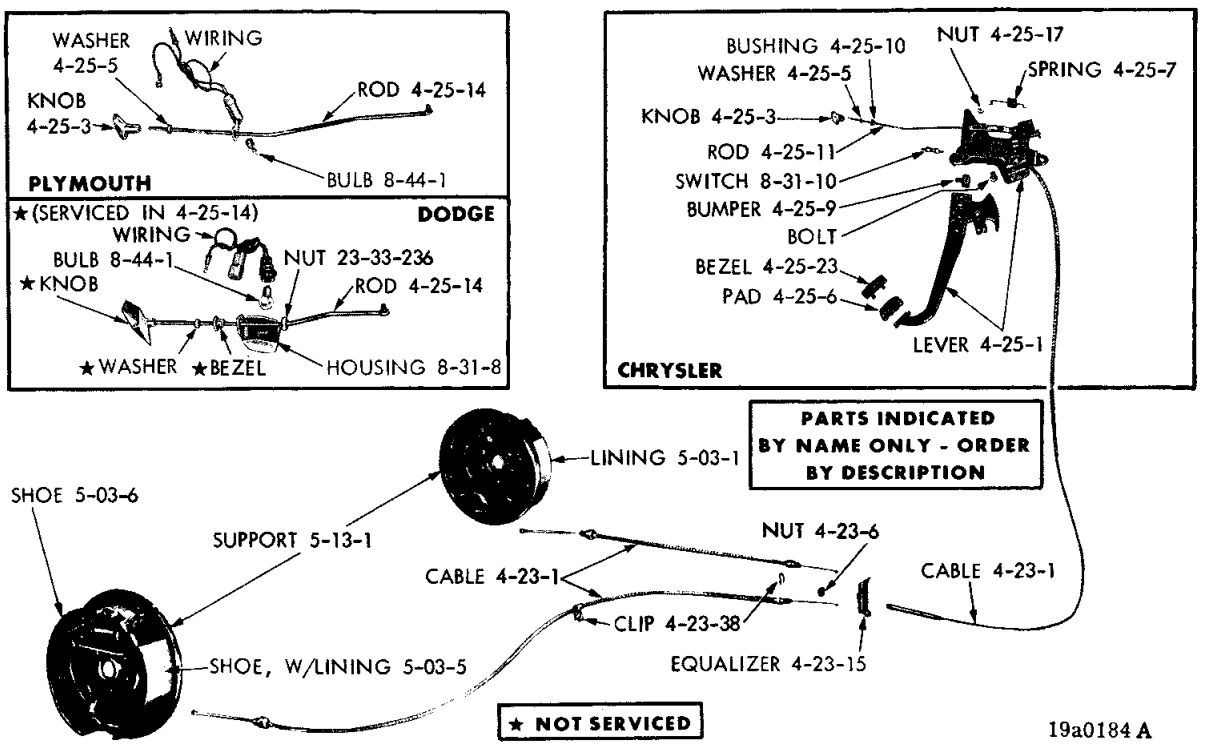

PARKING BRAKE SYSTEM - PLYMOUTH, DODGE AND CHRYSLER

MyMopar.com

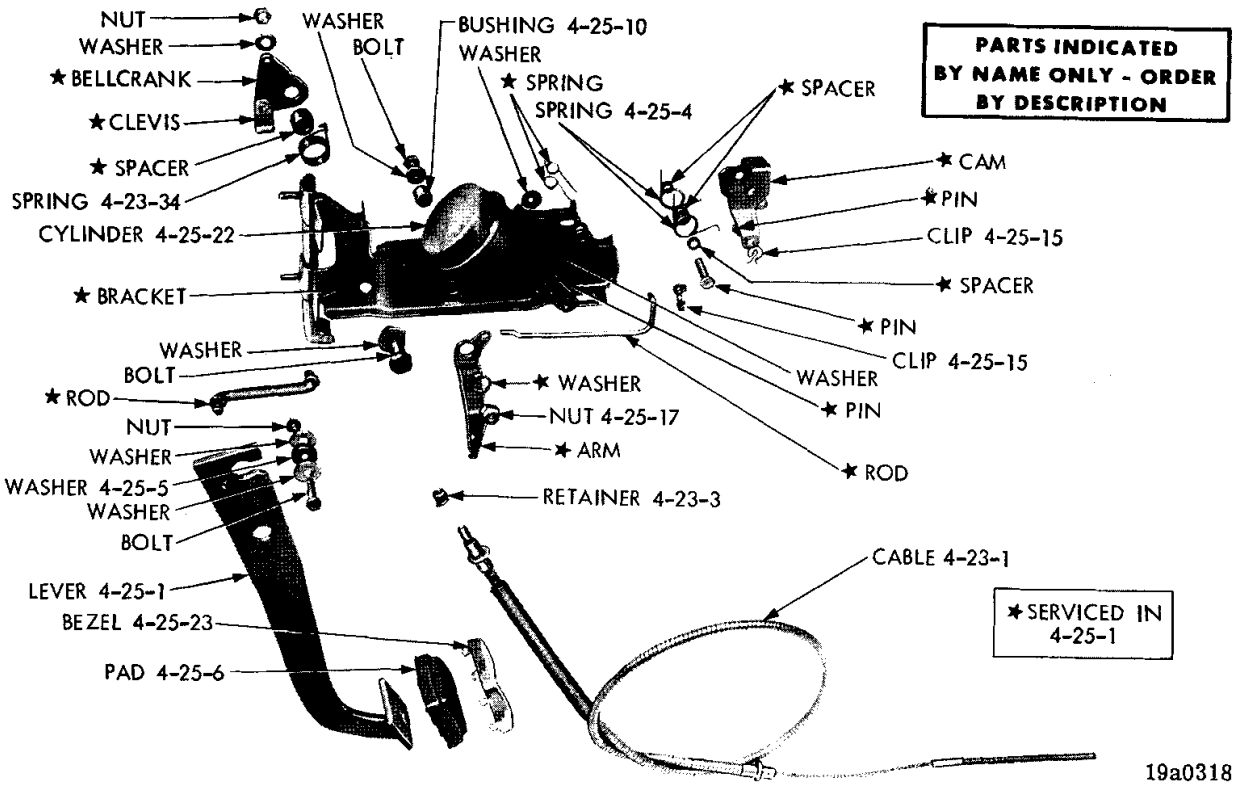

PARKING BRAKE (VACUUM RELEASE) - IMPERIAL

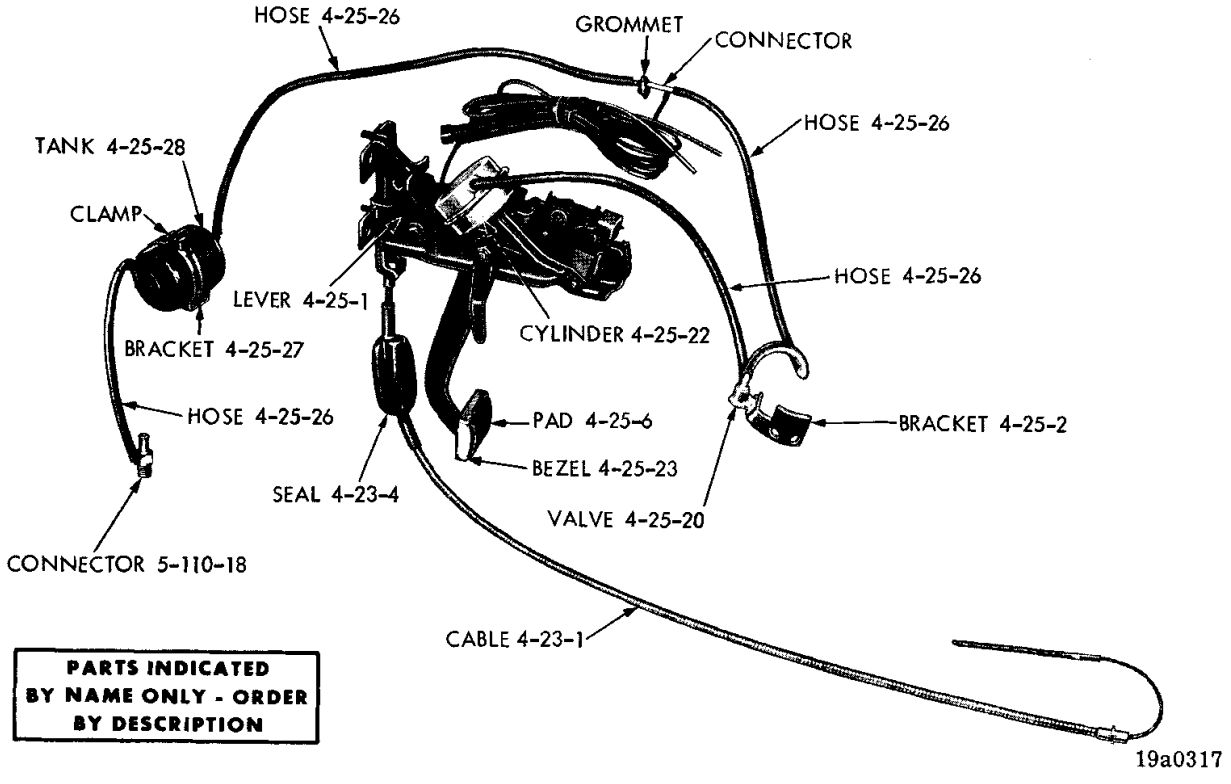

PARKING BRAKE SYSTEM (VACUUM RELEASE) - IMPERIAL

MyMopar.com

CODE	PART NAME AND DESCRIPTION	CYL	PER CAR	VALIANT / DART	PLYMOUTH BELVEDERE / DODGE CORONET	PLYMOUTH FURY / DODGE POLARA / CHRYSLER	IMPERIAL
4-08-0	**PARKING BRAKE LEVER - (HAND OPERATED)**						
4-08-1	LEVER		1	2265 300			
4-08-2	HANDLE, Lever		1	2409 450			
4-08-3	BRACKET, Lever Hinge		1	2409 449			
4-08-35	PIN, Lever Hinge		1	1732 198	1732 198		
4-08-36	RETAINER, Lever Hinge Pin		1	*1829 817			
4-10-0	**TRANSMISSION PARKING LOCK**						
4-10-1	CABLE, w/o Console		1	2460 552	2534 411	2460 552	2533 725
	w/Console		1	2534 415	2461 929	2461 929	
4-10-2	ADAPTER		1	1942 199	1942 199	1942 199	1942 199
4-10-3	SPRING, Cable Actuator		1	1942 011	1942 011	1942 011	1942 011
	Cable Adapter		1	1673 184	1673 184	1673 184	1673 184
4-10-4	WASHER, Cable Adapter		1	1942 012	1942 012	1942 012	1942 012
4-10-5	SCREW, Cable Clamp		1	2124 637	2124 637	2124 637	2124 637
4-10-7	LEVER, Sprag Operating		1	2124 589	2124 589	2124 589	2124 589
4-10-8	SHAFT, Operating Lever, except Police and Taxi		1	1942 544	1942 544		
	Police and Taxi		1	---- ---	1942 163	1942 163	1942 163
4-10-9	SPACER, Parking Lock Lever		1	2124 588	2124 588	2124 588	2124 588
4-10-10	SPRAG		1	2466 370	2466 370	2466 370	2466 370
4-10-11	SPRING, Sprag		1	1942 161	1942 161	1942 161	1942 161
4-10-15	COVER		1	2400 062	2400 062	2400 062	2400 062
	SCREW		5	180 078	180 078	180 078	180 078
	PLUG		1	444 688	444 688	444 688	444 688
4-10-16	GASKET, Cover		1	⊟2466 904	⊟2466 904	⊟2466 904	⊟2466 904
4-10-17	ROLLER		1	1942 005	1942 005	1942 005	1942 005
4-10-19	BEARING, Roller Needle		22	1942 006	1942 006	1942 006	1942 006
4-10-20	LEVER, Sprag Control, on Steering Column		1	2467 870	2467 870	2467 870	2467 870
4-10-21	SPRING, Steering Column Gear Shift Lever Sprag		1	2460 534	2460 534	2460 534	2460 534
4-10-22	NUT, Control Lever		1	6023 118	6023 118	6023 118	
4-10-24	RIVET, Roller Shaft		1	2124 648	2124 648	2124 648	2124 648
4-10-25	CLIP, Control Lever Pin	8	2	6023 285	6023 285	6023 285	
4-10-27	SEAL, Sprag Control Cable		1	*1536 268	*1536 268	*1536 268	*1536 268
4-10-28	GROMMET, Control Cable, w/Console		1	2405 571	2405 571	2405 571	2265 189
4-10-30	PIVOT, Sprag Lever, on Steering Column		1	2467 867	2467 867	2467 867	2467 867

TYPE LETTERS Indicate: V - Valiant, L - Dart, R - Belvedere, W - Coronet, P - Plymouth, D - Dodge, C - Chrysler, Y - Imperial

★Indicates use as required. Numerals in parentheses ( ) refer to notes. Printed in U.S.A.

⊟Indicates parts not listed in any previous parts book. Prices and specifications subject to change without notice.

* Indicates change or addition. March 1966 Supersedes May 1965.

MyMopar.com

CODE	PART NAME AND DESCRIPTION	CYL	PER CAR	VALIANT / DART	PLYMOUTH BELVEDERE / DODGE CORONET	PLYMOUTH FURY / DODGE POLARA / CHRYSLER	IMPERIAL
4-19-0	**PARKING BRAKE LEVER RETURN SPRING**						
4-19-1	SPRING, Hand Operated Lever		1	1556 693			
4-23-0	**PARKING BRAKE CABLE**						
4-23-1	CABLE, Front		1	2404 817	2404 818		
	P except Sta. Wgn.		1	---- ---	---- ---	2467 500	
	C except Sta. Wgn.		1	---- ---	---- ---	2467 502	
	P, C, Sta. Wgn., D, Y		1	---- ---	---- ---	2467 501	2467 516
	w/EQUALIZER, V, L Sta. Wgn.		1	2401 762			
	L except Sta. Wgn.		1	2409 427	2409 427	---- ---	2401 794
	Rear		2	*2448 768	*2448 768	---- ---	*2448 769
	Right		1	---- ---	---- ---	2401 797	
	Left		1	---- ---	---- ---	2448 769	2448 769
4-23-2	BRACKET, Cable, on Front Floor Pan		1	2401 756	---- ---	2574 185	
	Front		2	---- ---	2254 785		
	Rear		2	2259 028	2259 028		
4-23-3	RETAINER, Cable, Lower		1	2071 132	2071 132	2071 132	
			2	---- ---	1946 468	---- ---	2404 814
	At Lever		1	---- ---	---- ---	1946 468	
4-23-4	SEAL, Front Floor Pan	8	1	---- ---	---- ---	2259 118	2259 118
	SEAL, Dash Panel	8	1	---- ---	---- ---	---- ---	2218 849
4-23-6	NUT, Cable Equalizer		1	2073 205	2073 205	---- ---	2073 205
	Cable Adjusting		1	---- ---	---- ---	6023 997	
4-23-7	SUPPORT, Cable		★	2251 398	2251 398	2251 398	
4-23-15	EQUALIZER, Cable		1	2073 134	2073 134	2401 768	2073 134
4-23-24	PIN, Clevis, Upper		1	2265 269			
4-23-28	CLAMP, Cable		1	2265 273			
	CLIP, Parking Brake Cable Rear Bracket		2	2401 300			
4-23-34	SPRING, Bell Crank	8	1	---- ---	---- ---	---- ---	2409 434
4-23-36	CONNECTOR, Cable, Rear		2	2071 094	2071 094	---- ---	2071 094
4-23-38	CLIP, Cable, Front		1	2401 759			
	Rear		1	---- ---	---- ---	2409 195	
	On Rear Support Bracket		1	2401 300	2401 300	2201 467	2401 300
4-23-46	GROMMET, on Dash Panel		1	2401 772	2401 772		
	On Strg. Column P2, D2	8	1	---- ---	---- ---	2401 772	
4-25-0	**PARKING BRAKE LEVER (FOOT OPERATED)**						
4-25-1	LEVER		1	---- ---	2409 473	2467 520	2409 430
4-25-2	BRACKET, Parking Brake Release	8	1	---- ---	---- ---	---- ---	2533 745
4-25-3	KNOB, Release, R, P		1	---- ---	2467 560	2467 530	
	W		1	---- ---	2467 526		
	C1, C2, C3	8	1	---- ---	---- ---	2467 512	
4-25-4	SPRING, Cam Return	8	2	---- ---	---- ---	---- ---	2421 298

TYPE LETTERS Indicate: V - Valiant, L - Dart, R - Belvedere, W - Coronet, P - Plymouth, D - Dodge, C - Chrysler, Y - Imperial

★Indicates use as required. Numerals in parentheses ( ) refer to notes. Printed in U.S.A.

⊟Indicates parts not listed in any previous parts book. Prices and specifications subject to change without notice.

MyMopar.com

CODE	PART NAME AND DESCRIPTION	CYL	PER CAR	VALIANT / DART	PLYMOUTH BELVEDERE / DODGE CORONET	PLYMOUTH FURY / DODGE POLARA / CHRYSLER	IMPERIAL
4-25-0	**PARKING BRAKE LEVER (FOOT OPERATED) - Cont'd**						
4-25-5	WASHER, Release Knob		1	---- ---	2265 296	2265 296	
	Lever Silencing	8	1	---- ---	---- ---	---- ---	2404 849
4-25-6	PAD, Pedal		1	---- ---	2404 846	2467 514	2409 438
4-25-7	SPRING, Pedal Return		1	---- ---	2401 323	2409 462	
4-25-9	BUMPER, Pedal Stop		1	---- ---	2467 515	2467 515	
		8	1	---- ---	---- ---	---- ---	2404 848
4-25-10	BUSHING, Lever Release Rod, C	8	1	---- ---	---- ---	2467 519	
	Pedal Pivot	8	1	---- ---	---- ---	---- ---	2401 301
4-25-14	ROD, Release, at Lever		1	---- ---	2409 191		
	Release, at Knob, P		1	---- ---	2409 190	2467 539	
	Release, w/KNOB, D	8	1	---- ---	---- ---	2467 538	
	Release, at Knob, C	8	1	---- ---	---- ---	2467 541	
	NUT, w/WASHER, Rod Adjusting		1	---- ---	---- ---	6025 002	
4-25-15	CLIP, Release Rod		1	---- ---	6008 145		
		8	1	---- ---	---- ---	---- ---	6008 144
	CLIP, Pawl Release Cam Cotter	8	2	---- ---	---- ---	---- ---	1137 669
4-25-17	NUT, Pedal Pivot		1	---- ---	1927 232	1927 232	1940 596
4-25-18	CONNECTOR, Release Rod		1	---- ---	2265 316		
4-25-20	VALVE, Release	8	1	---- ---	---- ---	---- ---	2260 945
4-25-22	CYLINDER, Vacuum	8	1	---- ---	---- ---	---- ---	2401 786
4-25-23	BEZEL, Pedal Pad	8	1	---- ---	---- ---	2467 513	2409 439
4-25-26	HOSE, Release Valve to Dash	8	1	---- ---	---- ---	---- ---	2467 937
	Tank to Manifold	8	1	---- ---	---- ---	---- ---	*2467 937
4-25-27	BRACKET, Release Valve Surge Tank	8	1	---- ---	---- ---	---- ---	2405 465
4-25-28	TANK PACKAGE, Relief Valve Surge	8	1	---- ---	---- ---	---- ---	2421 268
4-26-0	**PARKING BRAKE OPERATING LEVER**						
4-26-1	LEVER, w/PIN, 9" Brakes		1	2265 360-1			
	10" Brakes, except Police and Taxi		1	---- ---	2260 830-1		
	11" Brakes, Taxi and Police		1	---- ---	2260 800-1		
	11" Brakes		1	---- ---	---- ---	2260 800-1	2260 800-1
4-26-17	STRUT, Lever, 9" Brakes	6	2	2072 689			
	Lever, Right, V1, L1, w/Trailer Tow Pkge., V2, L2, 10" Brakes		1	2534 666			
	Lever, Left, V1, L1, w/Trailer Tow Pkge., V2, L2, 10" Brakes		1	2534 667			
	10" Brakes, R, W, except Police and Taxi		2	---- ---	2409 823		
	Right, 11" Brakes, R, W, Police and Taxi		1	---- ---	2533 892	2533 892	2533 892
	Left, 11" Brakes, R, W, Police and Taxi		1	---- ---	2533 893	2533 893	2533 893
4-26-18	SPRING, Lever Strut, V1, L1		2	2072 646	2533 822	2533 822	2533 822
4-26-26	WASHER, Lever Pin		2	2072 643	2072 643	2072 643	2072 643

TYPE LETTERS Indicate: V - Valiant, L - Dart, R - Belvedere, W - Coronet, P - Plymouth, D - Dodge, C - Chrysler, Y - Imperial

★Indicates use as required. Numerals in parentheses ( ) refer to notes. Printed in U.S.A.
⊟Indicates parts not listed in any previous parts book. Prices and specifications subject to change without notice.
* Indicates change or addition. March 1966 Supersedes May 1965.

MyMopar.com

CODE	PART NAME AND DESCRIPTION	CYL	PER CAR	VALIANT / DART	PLYMOUTH BELVEDERE / DODGE CORONET	PLYMOUTH FURY / DODGE POLARA / CHRYSLER	IMPERIAL
4-26-0	**PARKING BRAKE OPERATING LEVER - Cont'd**						
4-26-27	LOCK, Lever Pin Washer		2	2072 644	2072 644	2072 644	2072 644
4-26-28	NUT, Brake Pedal Sleeve Screw		1	2208 008			

NOTES

TYPE LETTERS Indicate: V - Valiant, L - Dart, R - Belvedere, W - Coronet, P - Plymouth, D - Dodge, C - Chrysler, Y - Imperial

★Indicates use as required. Numerals in parentheses ( ) refer to notes. Printed in U.S.A.

⊟Indicates parts not listed in any previous parts book. Prices and specifications subject to change without notice.

MyMopar.com

GROUP 5 - BRAKE-SERVICE

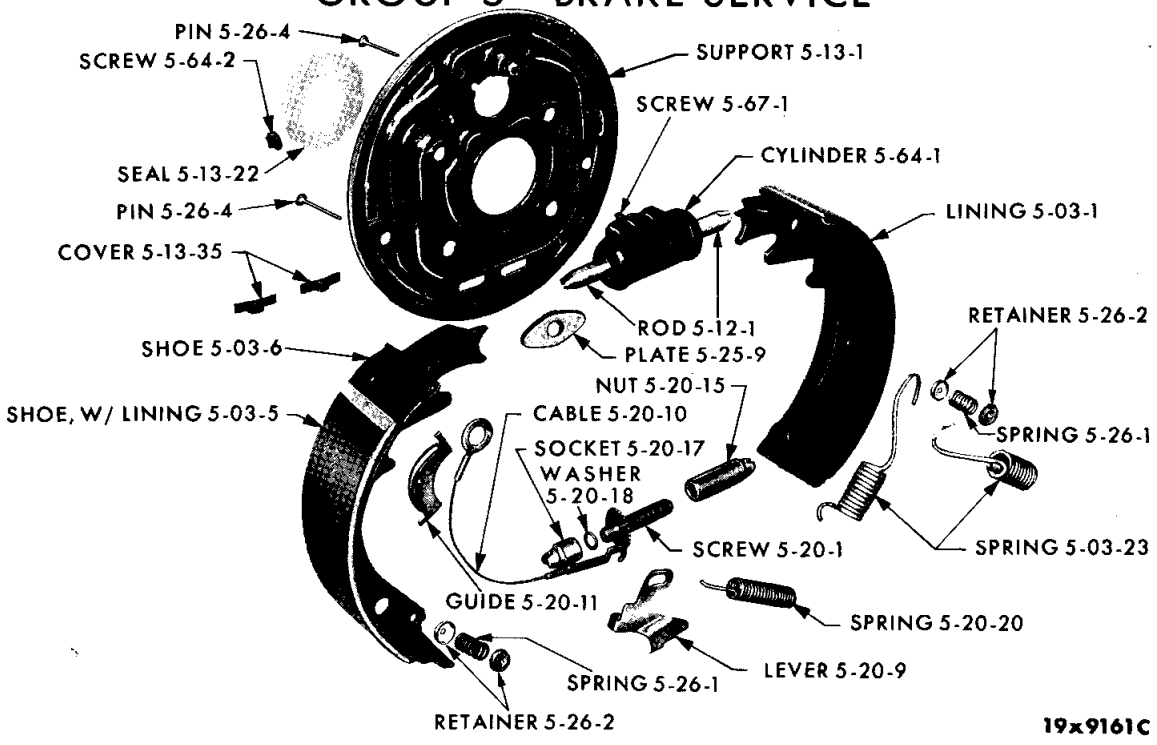

FRONT WHEEL BRAKE - BELVEDERE, PLYMOUTH, CORONET, DODGE, CHRYSLER AND IMPERIAL

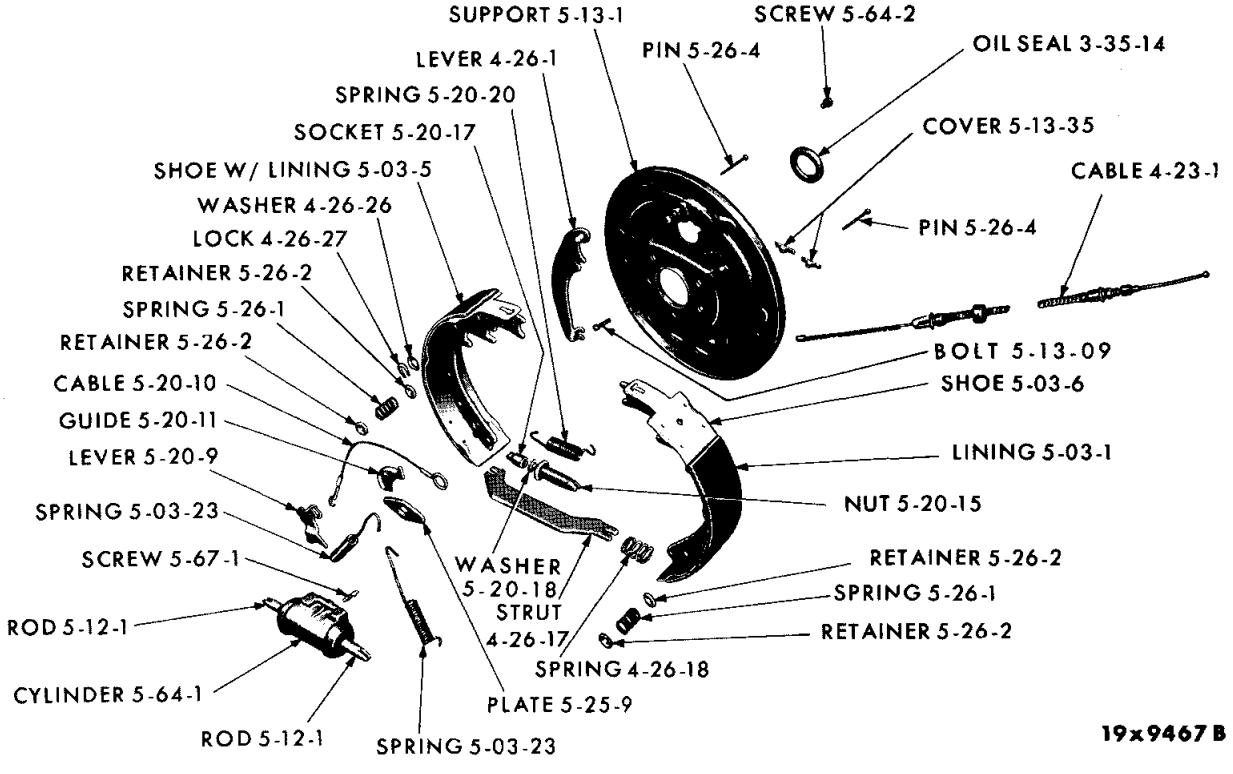

REAR WHEEL BRAKE - BELVEDERE, PLYMOUTH, CORONET, DODGE, CHRYSLER AND IMPERIAL

MyMopar.com

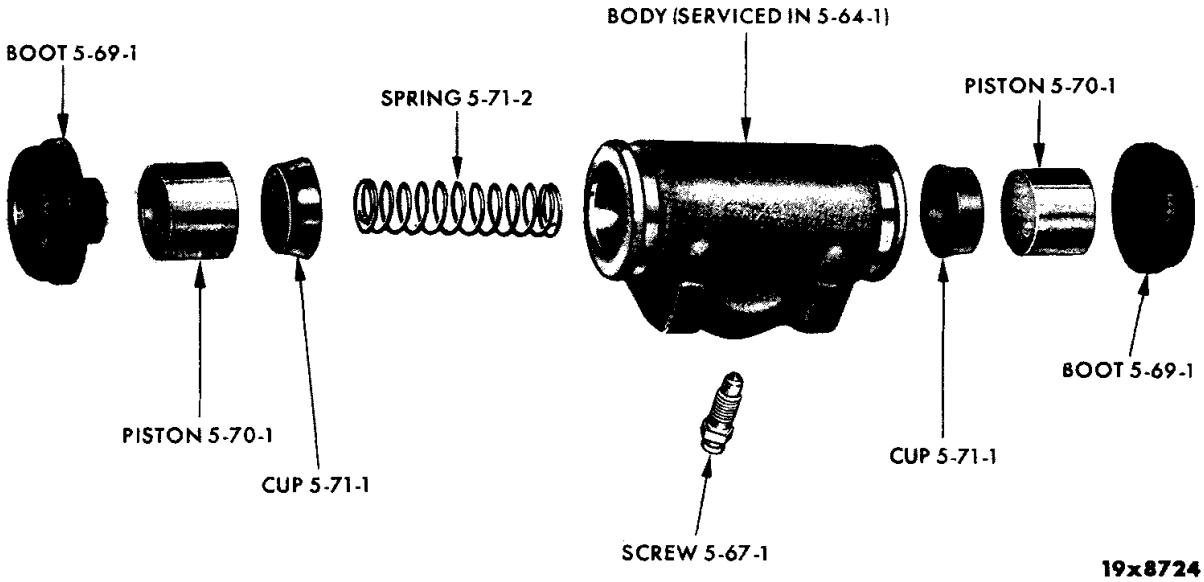

FRONT AND REAR WHEEL CYLINDER - VALIANT AND DART

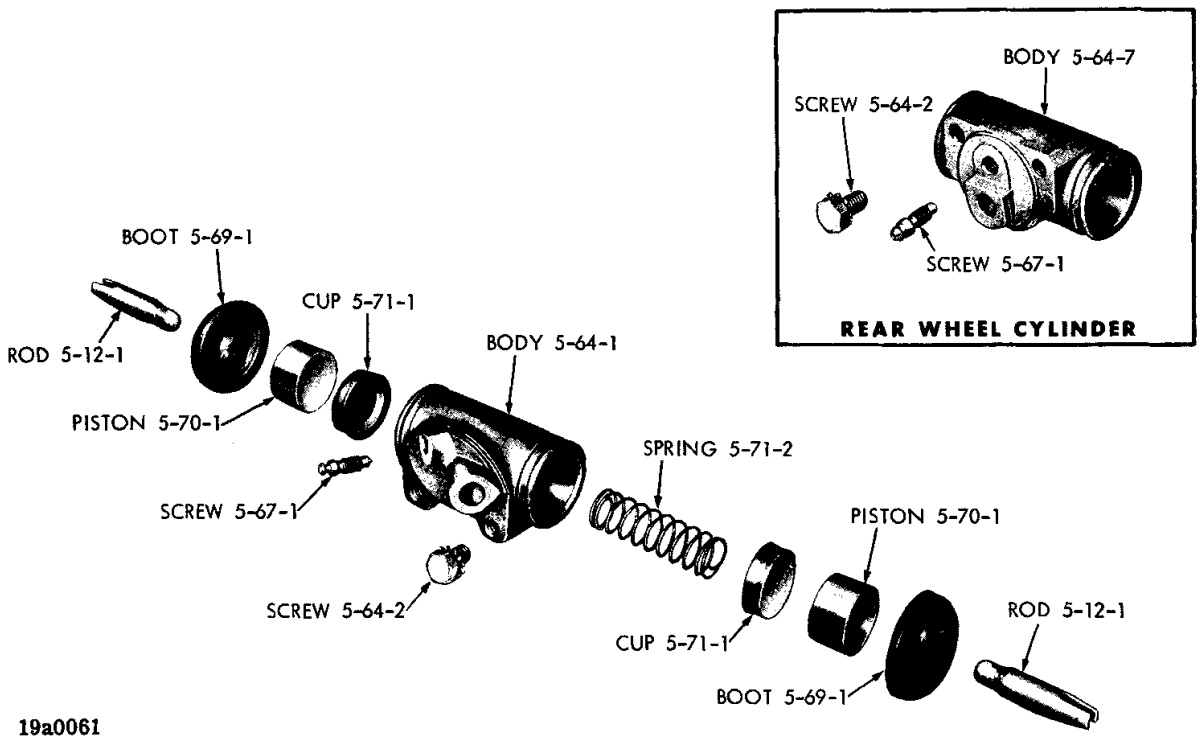

FRONT AND REAR WHEEL CYLINDER - BELVEDERE, PLYMOUTH, CORONET, DODGE, CHRYSLER AND IMPERIAL

MyMopar.com

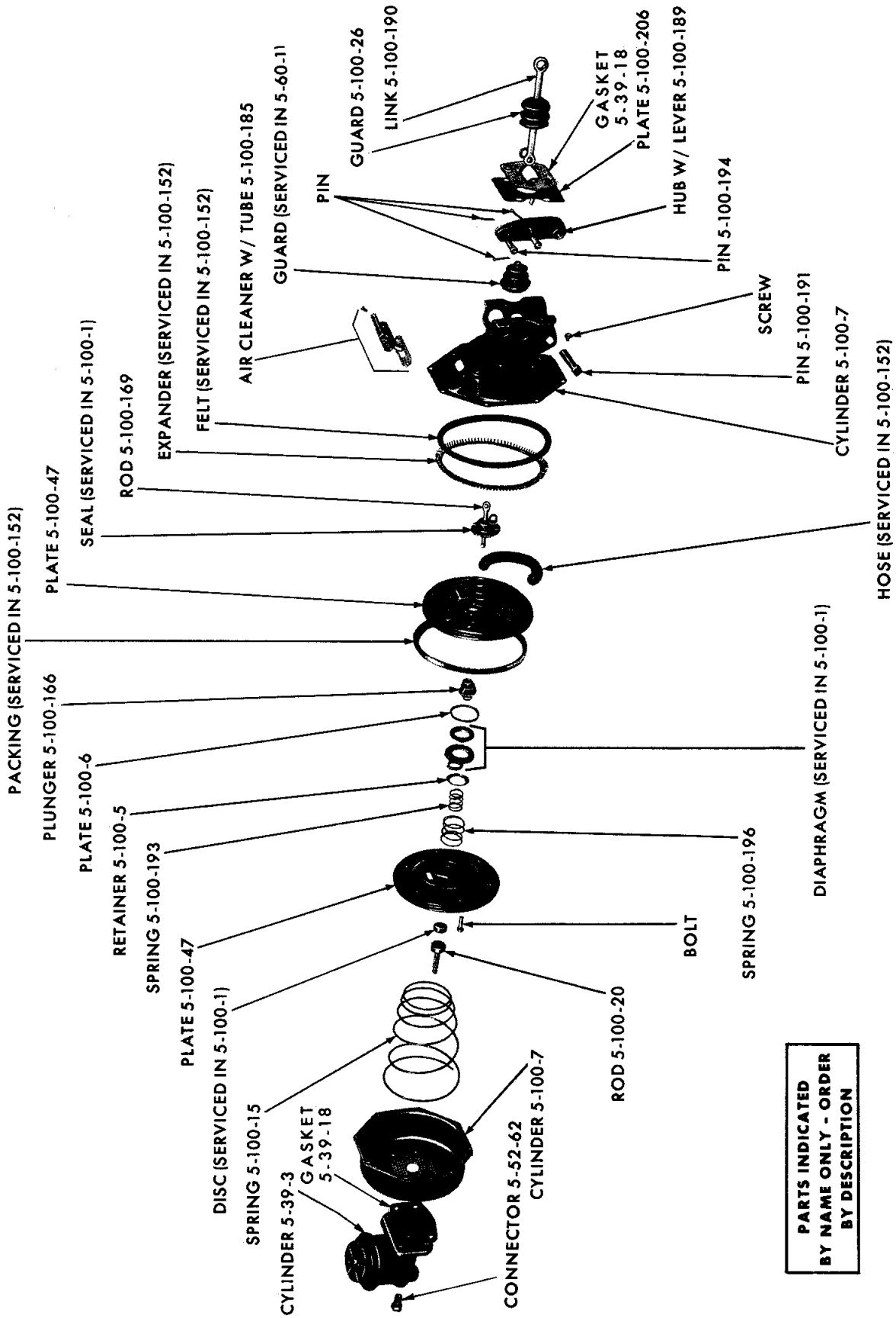

POWER BRAKE POWER UNIT - VALIANT AND DART (BENDIX TYPE)

MyMopar.com

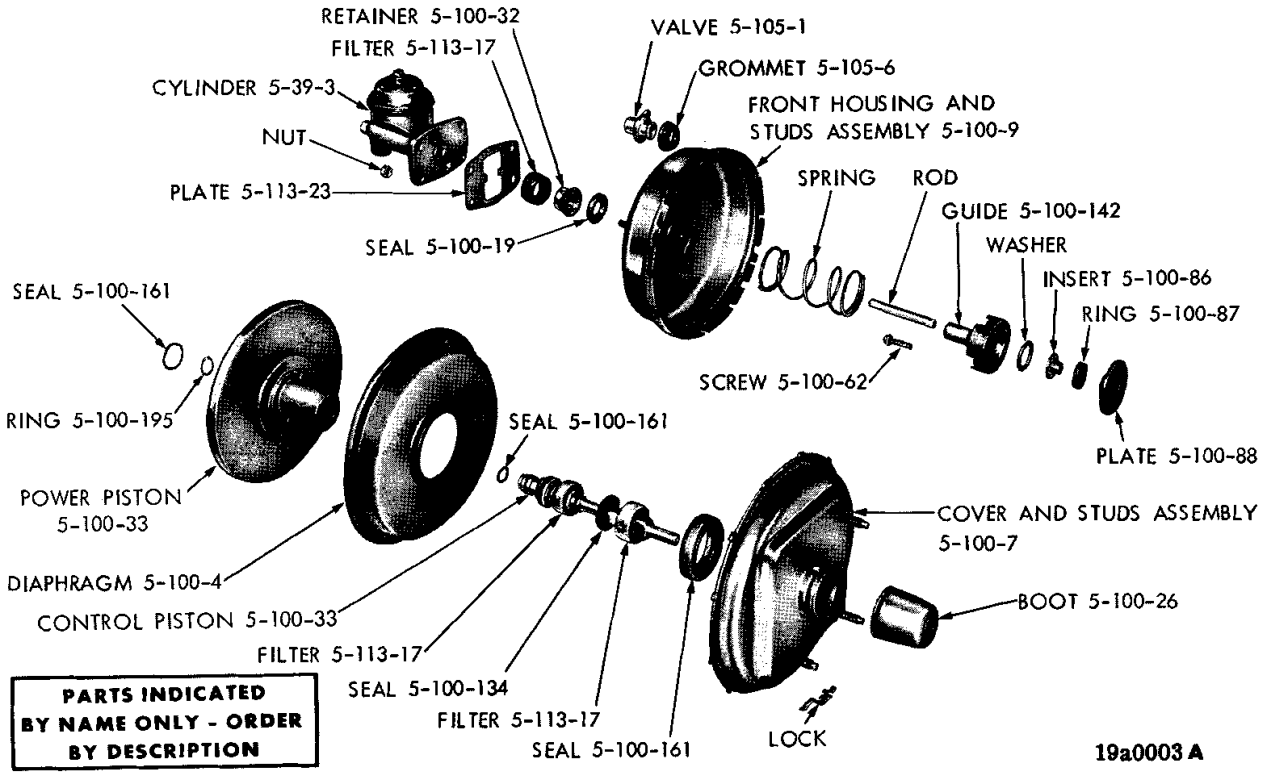

POWER BRAKE POWER UNIT - BELVEDERE, PLYMOUTH, CORONET, AND DODGE (KELSEY-HAYES TYPE)

NOTES

MyMopar.com

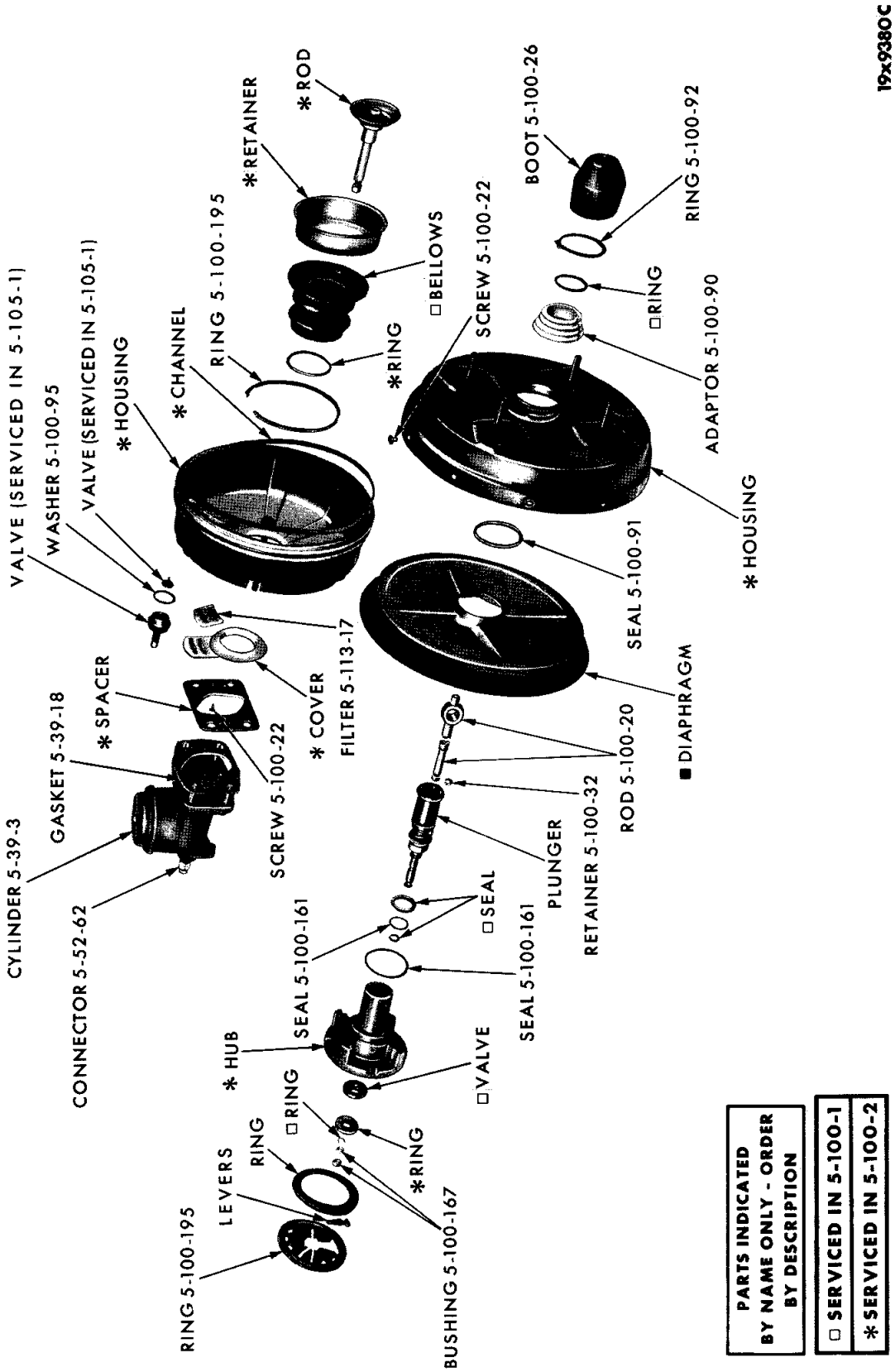

POWER BRAKE POWER UNIT - PLYMOUTH, DODGE, CHRYSLER C1-2 EXCEPT 300L, C3 (MIDLAND-ROSS TYPE I)

MyMopar.com

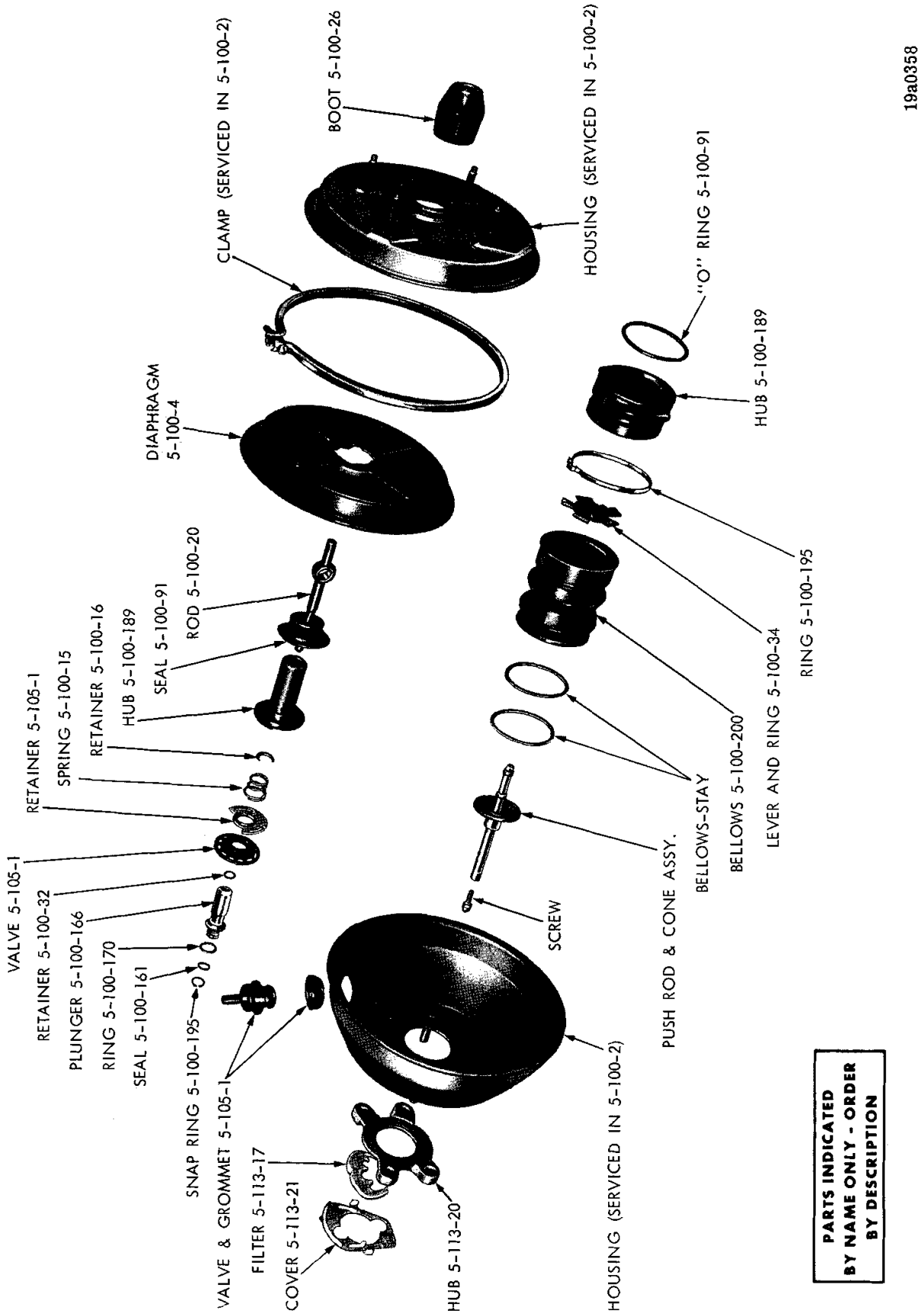

POWER BRAKE POWER UNIT - PLYMOUTH, DODGE, CHRYSLER C1-2 EXCEPT 300L, C3, (MIDLAND ROSS TYPE II)

MyMopar.com

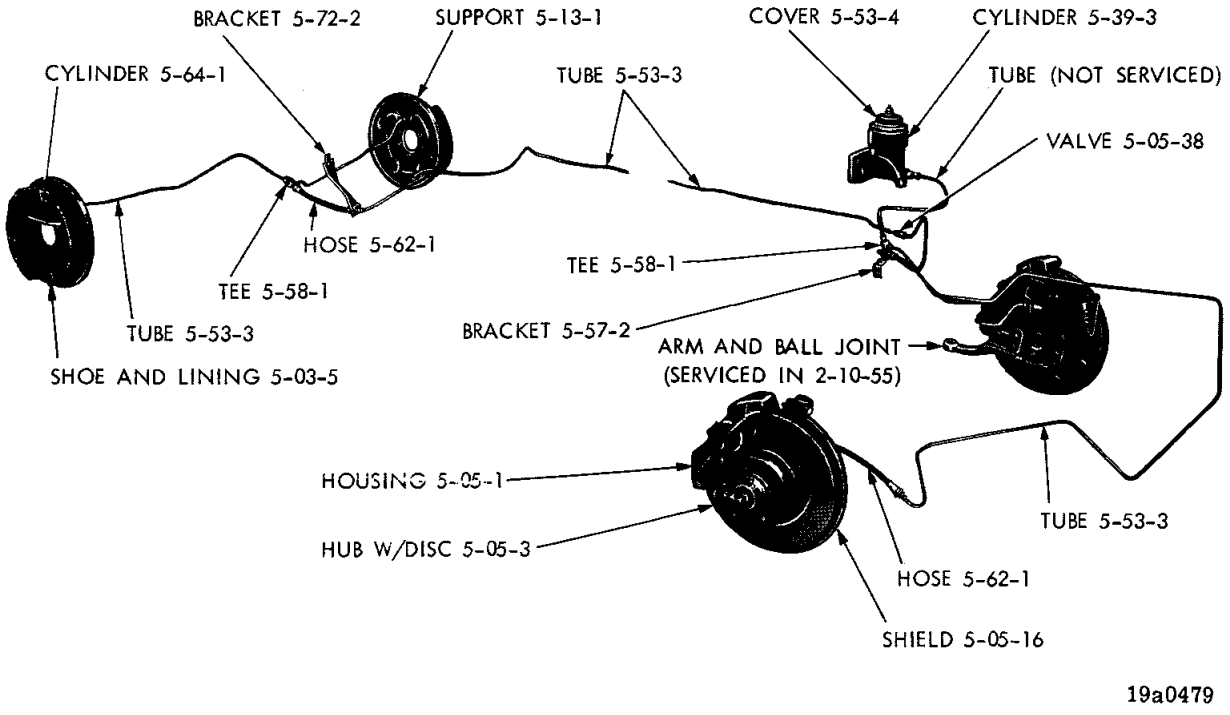

DISC BRAKE SYSTEM - PLYMOUTH P2, DODGE D2 AND CHRYSLER C1-2-3

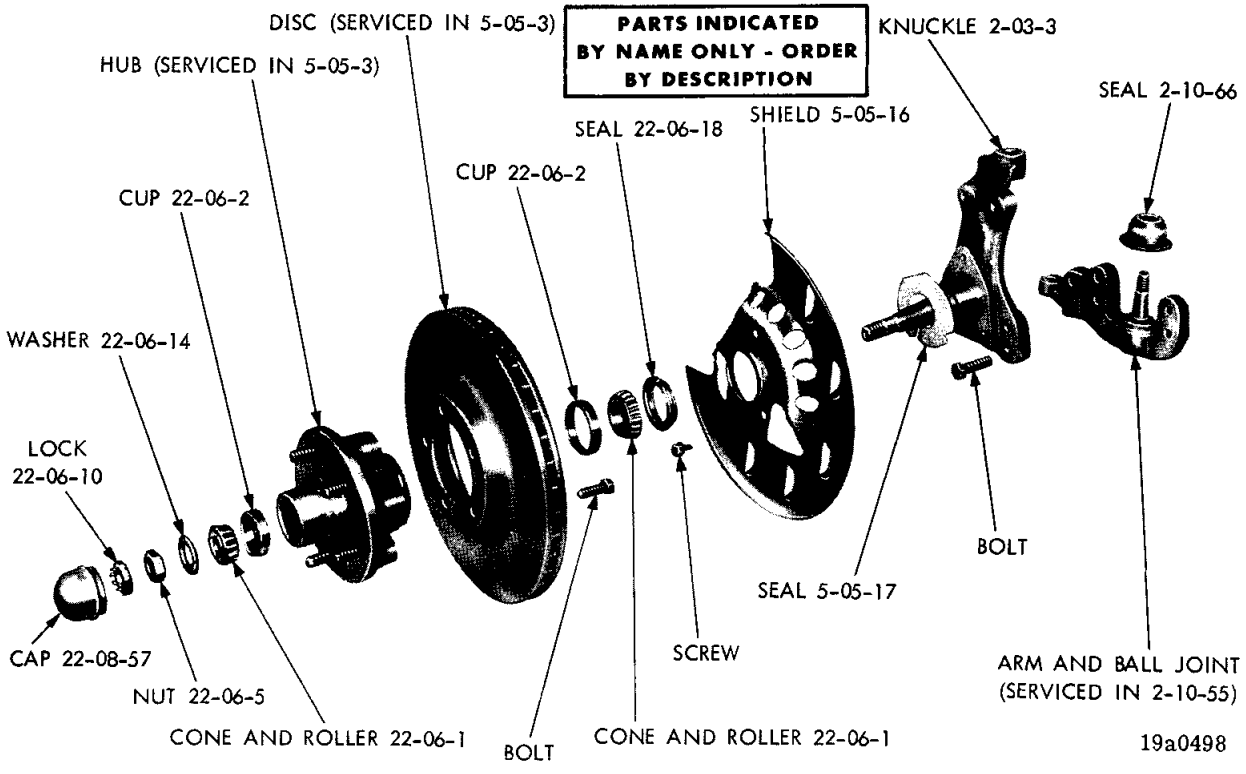

FRONT WHEEL DISC BRAKE - PLYMOUTH, DODGE AND CHRYSLER

MyMopar.com

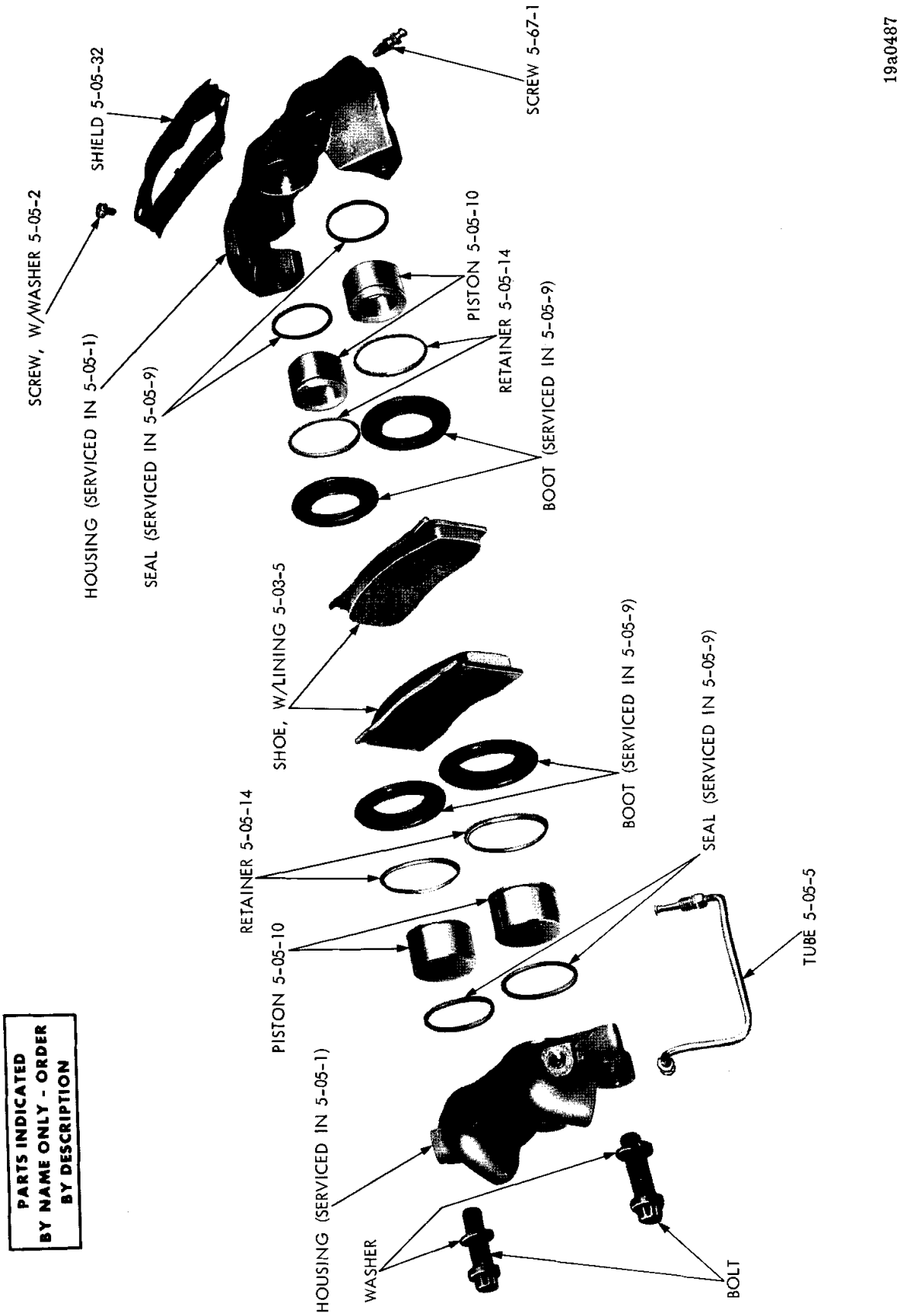

CALIPER DISC BRAKES - VALIANT AND DART

MyMopar.com

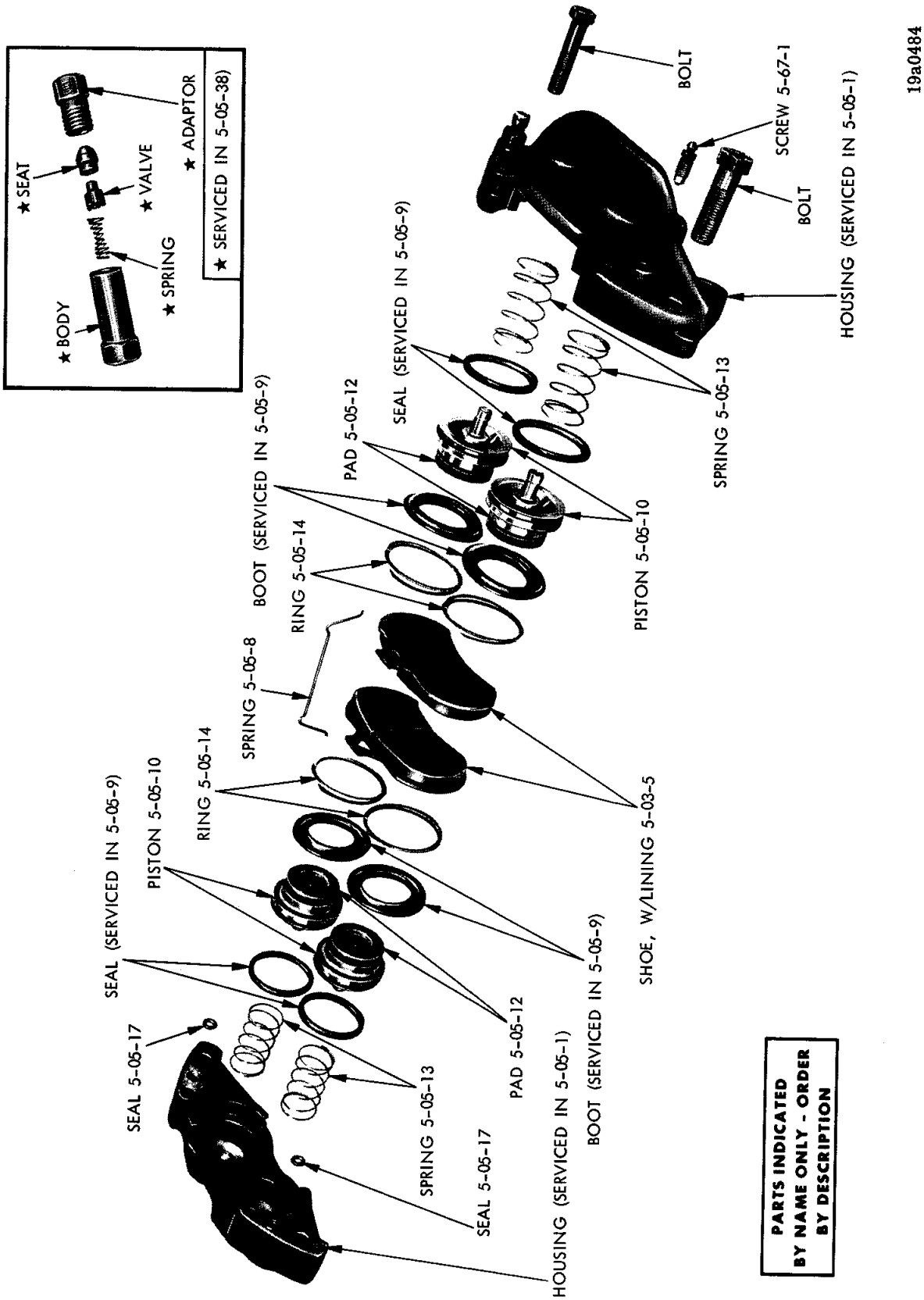

PARTS INDICATED
BY NAME ONLY - ORDER
BY DESCRIPTION

CALIPER DISC BRAKES - BUDD

MyMopar.com

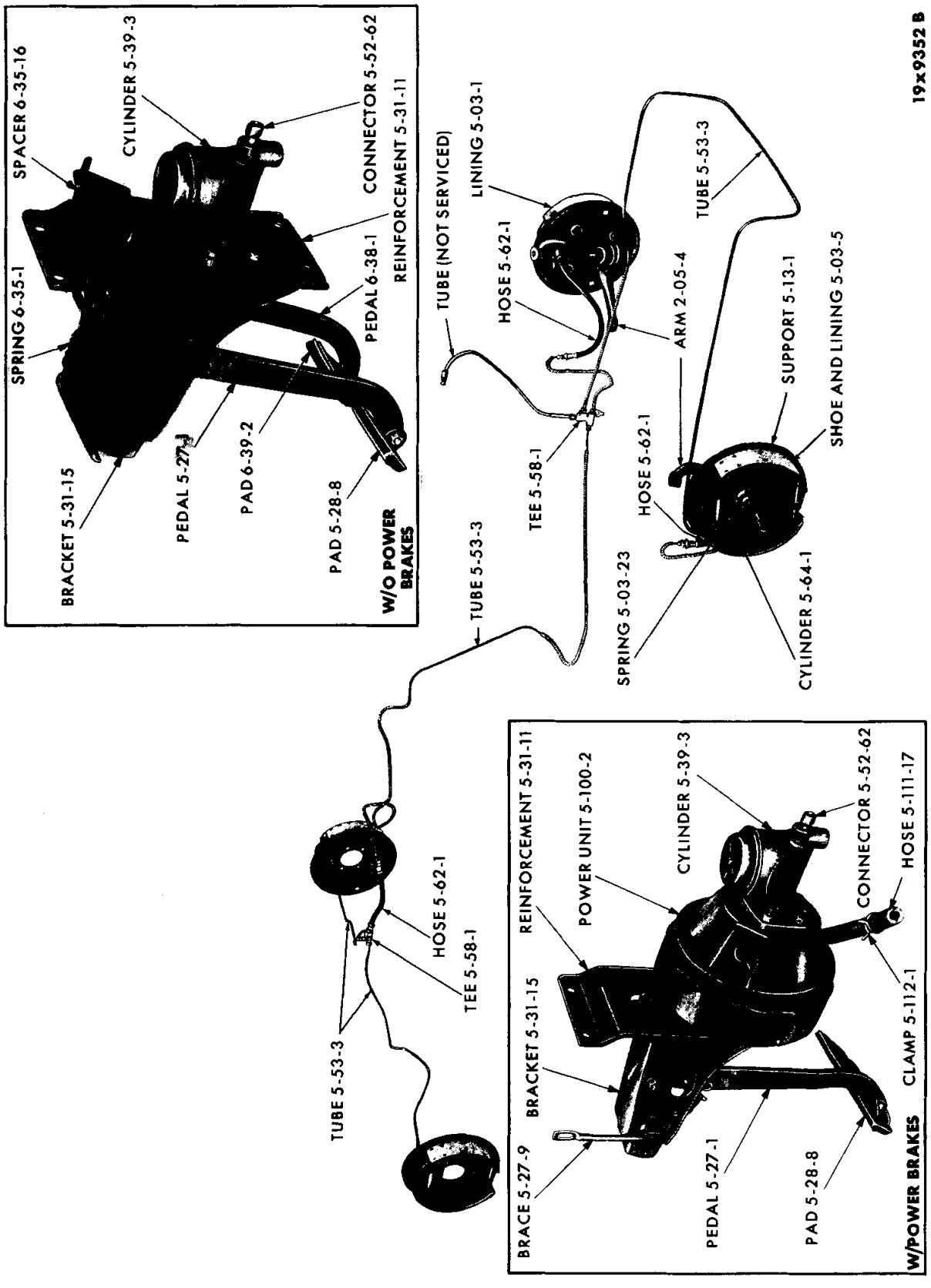

HYDRAULIC BRAKE SYSTEM - ALL MODELS

MyMopar.com

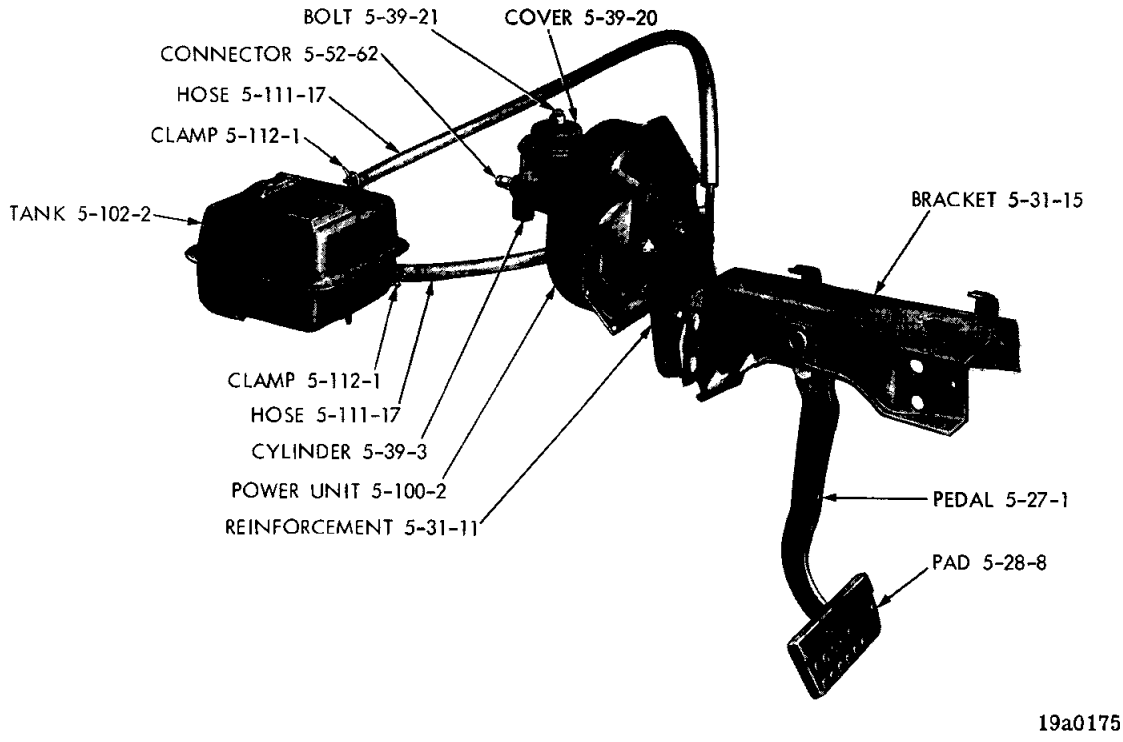

BRAKE PEDAL AND BOOSTER BRAKE SYSTEM (WITH VACUUM TANK) - VALIANT AND DART

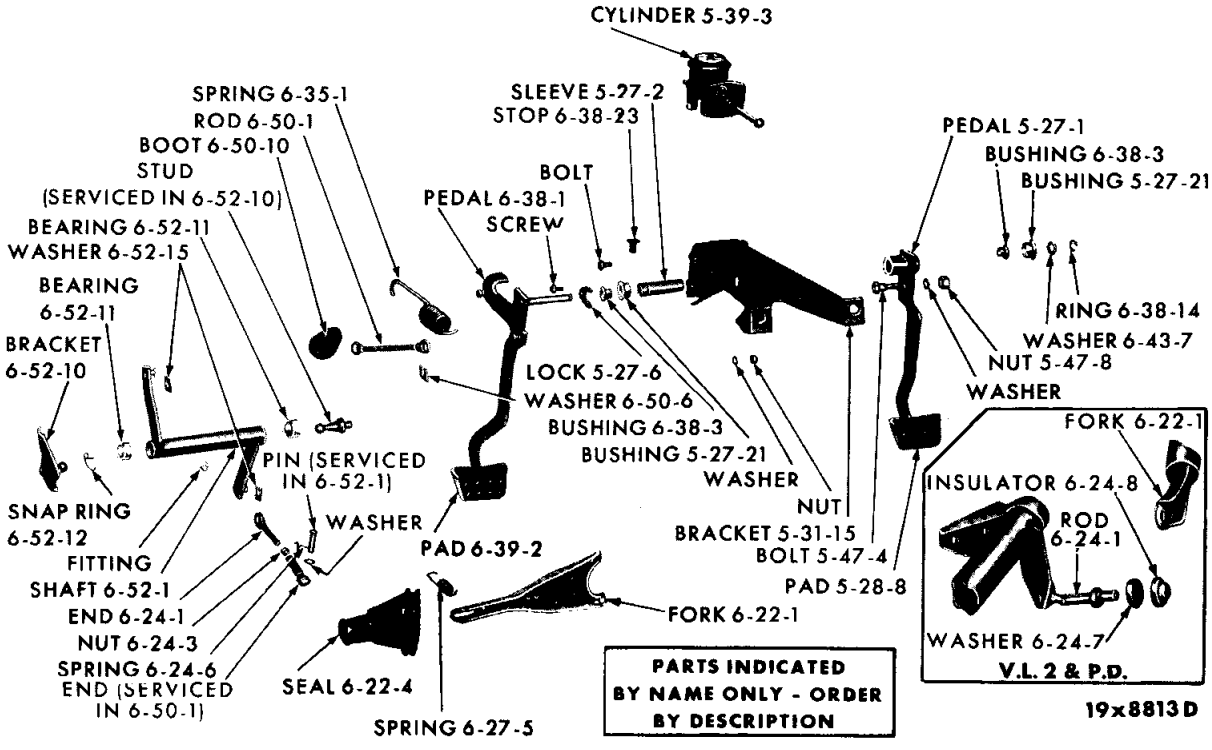

BRAKE AND CLUTCH PEDAL LINKAGE (MANUAL TRANSMISSION) - VALIANT AND DART

MyMopar.com

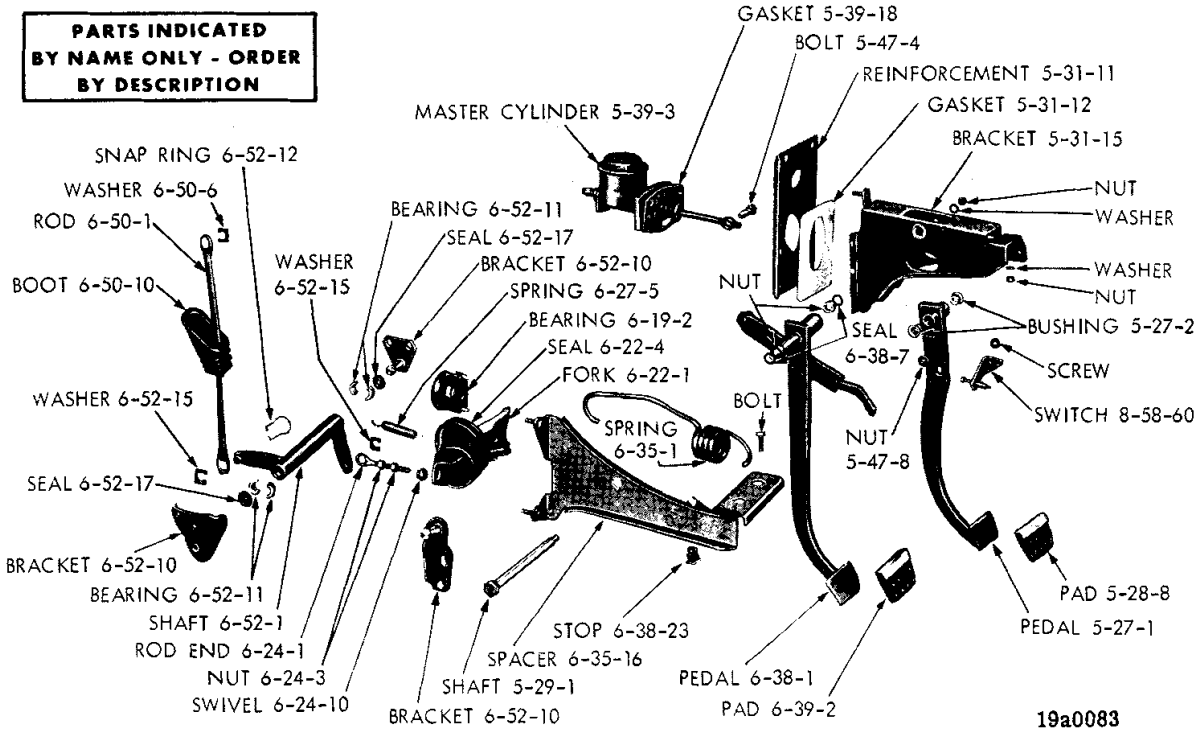

BRAKE AND CLUTCH PEDAL LINKAGE (MANUAL TRANSMISSION) - BELVEDERE AND CORONET

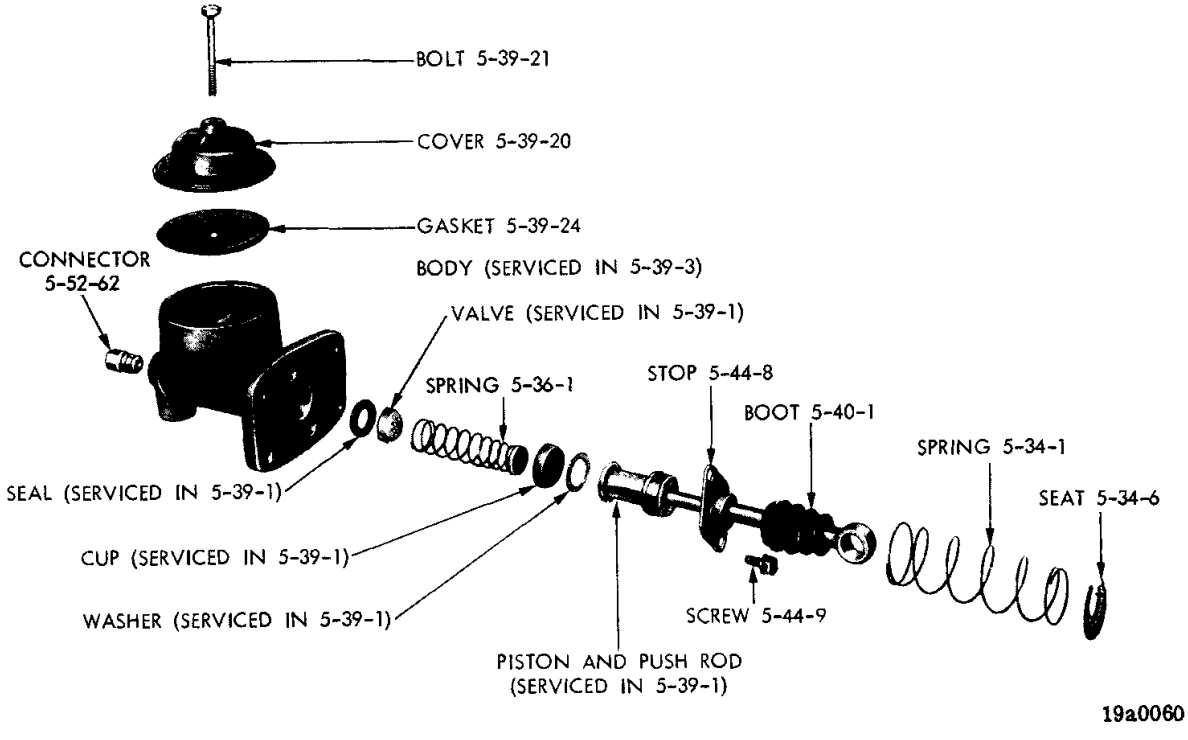

MASTER CYLINDER - WITHOUT POWER BRAKES

MyMopar.com

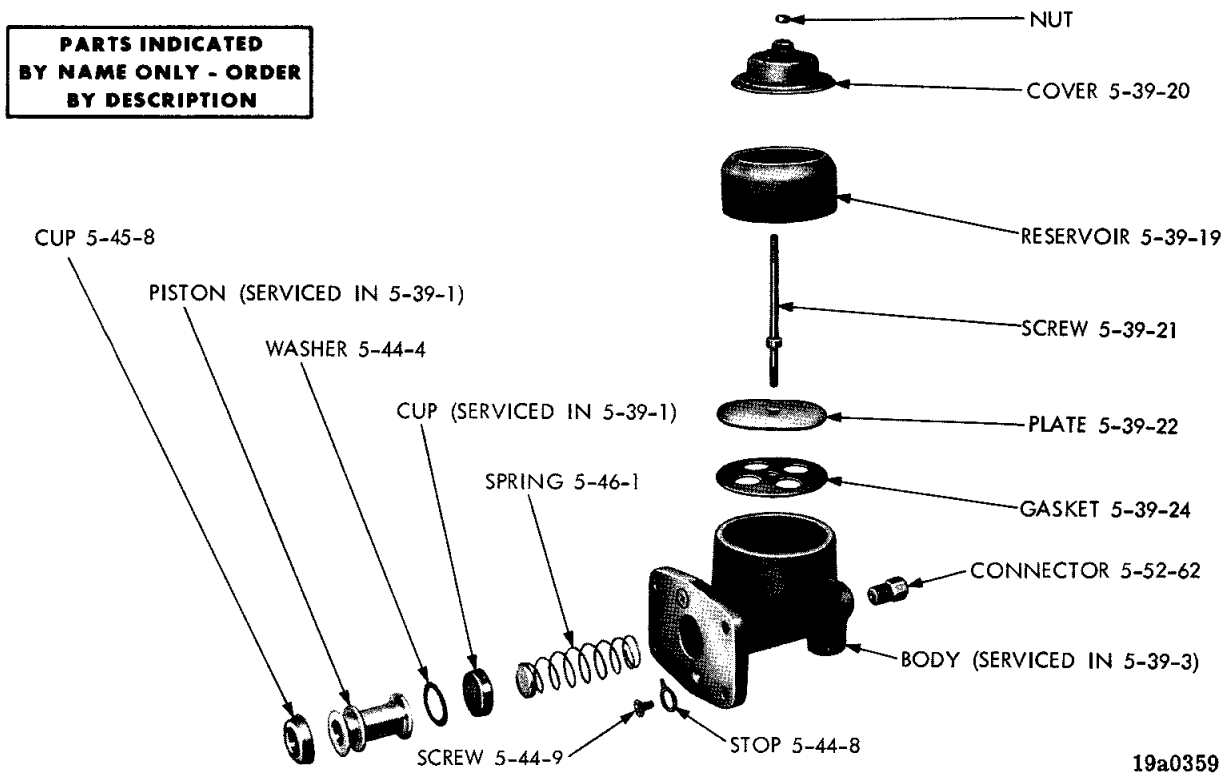

MASTER CYLINDER (DISC BRAKES) - ALL EXCEPT BELVEDERE, CORONET AND IMPERIAL

NOTES

MyMopar.com

NOTES

MyMopar.com

CODE	PART NAME AND DESCRIPTION	CYL	PER CAR	VALIANT / DART	PLYMOUTH BELVEDERE / DODGE CORONET	PLYMOUTH FURY / DODGE POLARA / CHRYSLER	IMPERIAL
5-01-0	**BRAKE FLUID**						
5-01-2	FLUID, 12 oz. Can		★	*2421 352	*2421 352	*2421 352	*2421 352
	1 Quart Can		★	1879 270	1879 270	1879 270	1879 270
	1 Gallon Can		★	1879 271	1879 271	1879 271	1879 271
	5 Gallon Can		★	1879 272	1879 272	1879 272	1879 272
	30 Gallon Can		★	1879 273	1879 273	1879 273	1879 273
5-03-0	**WHEEL BRAKE SHOE AND LINING**						
5-03-1	LINING PACKAGE, 9″ Brakes	6	1	2448 321			
	10″ Brakes		1	*2495 006	2298 842		
	P All, D except Sta. Wgn., 11″ Brakes		1	---- ---	---- ---	*2525 454	
	D, C1, Sta. Wgn., C2, C3 except Sta. Wgn., 11″ Brakes	8	1	---- ---	---- ---	2525 463	
	P2, D except Sta. Wgn., w/383 and 413 cu. in. Engine, 11″ Brakes	8	1	---- ---	---- ---	2525 463	
	R, W, P, Taxi 11″ Brakes	8	1	---- ---	2421 314	2525 462	
	C3 Sta. Wgn., 11″ Brakes	8	1	---- ---	---- ---	2495 006	
	P2, D2, w/426 cu. in. Eng., 11″ Brakes	8	1	---- ---	---- ---	2495 006	
	P, D, C, Police, Heavy Duty and Trailer Package, 11″ Brakes		1	---- ---	---- ---	2495 006	
5-03-3	SHOE and LINING PACKAGE, Front and Rear Wheel Brake Axle Set 10″ Brakes		2	---- ---	2585 502		
	Front Wheel, Axle Set, 9″ Brakes	6	1	2585 505			
	Front Wheel, Axle Set, 10″ Brakes		1	2585 507			
	Front Wheel, Axle Set, Police, Heavy Duty Trailer Towing Package, 11″ Brakes		1	---- ---	2585 510	2585 510	2585 510
	Front Wheel, Axle Set, P1, P2, Taxi, 11″ Brakes		1	---- ---	*2585 681	*2585 681	
	Front Wheel, Axle Set, P2, D, Police, Disc Brake, 11″ Brakes	8	1	---- ---	---- ---	⊟2808 273	
	Front Wheel, Axle Set, Disc Brake		1	*2585 590			
	Rear Wheel, Axle Set, 9″ Brakes		1	2585 506			
	Rear Wheel, Axle Set, 10″ Brakes		1	2585 508			
	Rear Wheel, Axle Set, P1, All, P2, D, C1 except Sta. Wgn., 11″ x 2″		1	---- ---	---- ---	*2585 509	
	Rear Wheel, Axle Set, D, 426 cu. in. Eng., Police, C1, C2, C3, 11″ Brakes		1	---- ---	---- ---	2585 510	2585 510
	Rear Wheel, Axle Set, R, W, Police, Heavy Duty and Trailer Tow Package, 11″ x 2 1/2″		1	---- ---	*2585 511		
	Rear Wheel, Axle Set, P2, w/383 cu. in. Eng., 2 and 4 bbl., 426 cu. in. Eng., D2 w/383 and 413 cu. in. Eng., 4 bbl., 11″ x 2 1/2″	8	1	---- ---	---- ---	*2585 511	
	Rear Wheel, Axle Set, R1, R2, Taxi, P2, D2, Police, w/426 cu. in. Eng., w/Frt. Disc. Brakes, 11″ Brakes		1	---- ---	---- ---	*2585 513	
	Rear Wheel, Axle Set, P1, P2, C1, 11″ Brakes	8	1	---- ---	---- ---	2585 396	
5-03-5	SHOE, w/LINING, Front Wheel, Front Shoe, 9″ Brakes	6	2	2405 804			
	Front Wheel, Rear Shoe, 9″ Brakes	6	2	2405 807			
	Rear Wheel, Front Shoe, 9″ Brakes	6	2	2405 814			
	Rear Wheel, Rear Shoe, 9″ Brakes	6	2	2405 817			
	Front Wheel, Front Shoe, 10″ Brakes		2	2534 850	2265 777		
	Front Wheel, Rear Shoe, 10″ Brakes		2	2534 853	2265 781		
	Rear Wheel, Front Shoe, 10″ Brakes		2	2534 856	2265 777		
	Rear Wheel, Rear Shoe, 10″ Brakes		2	2534 859	2265 781		

TYPE LETTERS Indicate: V - Valiant, L - Dart, R - Belvedere, W - Coronet, P - Plymouth, D - Dodge, C - Chrysler, Y - Imperial

★Indicates use as required. Numerals in parentheses ( ) refer to notes. Printed in U.S.A.

⊟Indicates parts not listed in any previous parts book. Prices and specifications subject to change without notice.

* Indicates change or addition.

MyMopar.com

5-03-0 WHEEL BRAKE SHOE AND LINING - Cont'd

CODE	PART NAME AND DESCRIPTION	CYL	PER CAR	VALIANT / DART	PLYMOUTH BELVEDERE / DODGE CORONET	PLYMOUTH FURY / DODGE POLARA / CHRYSLER	IMPERIAL
5-03-5	SHOE, w/LINING - Cont'd						
	Front Wheel, Front Shoe, 11" Brakes, Taxi, P, D		2	---- ---	---- ---	*2401 806	
	Front Wheel, Rear Shoe, 11" Brakes, Taxi, P, D		2	---- ---	---- ---	*2401 807	
	Rear Wheel, Front Shoe, 11" Brakes, Taxi, P, D		2	---- ---	---- ---	*2401 800	
	Rear Wheel, Rear Shoe, 11" Brakes, Taxi, P, D		2	---- ---	---- ---	*2401 801	
	Front Wheel, P2, D, Police, 11" Brakes, Disc Brake	8	4	---- ---	---- ---	2660 289	
	Front Wheel, Front Shoe, Police and Heavy Duty and Trailer Package, 11" Brakes		2	---- ---	2405 179		
	Front Wheel, Rear Shoe, Police and Heavy Duty and Trailer Package, 11" Brakes		2	---- ---	2409 882		
	Rear Wheel, Front Shoe, Police and Heavy Duty and Trailer Package, 11" Brakes		2	---- ---	2405 179	2405 179	
	Rear Wheel, Rear Shoe, Police and Heavy Duty and Trailer Package, 11" Brakes		2	---- ---	2409 883		
	Front Wheel, Front Shoe, P1, P2, All, D2, C1, except Sta. Wgn., 11" x 2 3/4" Brakes		2	---- ---	---- ---	2534 862	
	Front Wheel, Rear Shoe, P1, P2, All, D2, C1, except Sta. Wgn., 11" x 2 3/4" Brakes		2	---- ---	---- ---	2534 865	
	Rear Wheel, Front Shoe, P1, P2, All, D2, C1, except Sta. Wgn., 11" x 2" Brakes		2	---- ---	---- ---	2534 868	
	Rear Wheel, Rear Shoe, P1, P2, All, D2, C1, except Sta. Wgn., 11" x 2" Brakes		2	---- ---	---- ---	2534 871	
	Front Wheel, Front Shoe, 11" x 3" Brakes		2	---- ---	*2405 179	*2405 179	*2405 179
	Front Wheel, Rear Shoe, 11" x 3" Brakes		2	---- ---	2409 882	2409 882	2409 882
	Rear Wheel, Front Shoe, P2, D2, C1, Sta. Wgn., C2, C3 except Sta. Wgn., 11" x 2 1/2" Brakes	8	2	---- ---	*2405 175	2405 175	
	Rear Wheel, Rear Shoe, P2, D2, C1, Sta. Wgn., C2, C3 except Sta. Wgn., 11" x 2 1/2" Brakes	8	2	---- ---	2409 883	2409 883	
	Rear Wheel, Front Shoe, C3 Sta. Wgn., 11" x 3" Brakes	8	2	---- ---	---- ---	2405 179	2405 179
	Rear Wheel, Rear Shoe, C3 Sta. Wgn., 11" x 3" Brakes	8	2	---- ---	---- ---	2409 882	2409 882
	Front and Rear Wheel, Front Shoe, Police, Heavy Duty and Trailer Package, 11" x 3" Brakes		4	---- ---	---- ---	2405 179	
	Front and Rear Wheel, Rear Shoe, Police, Heavy Duty and Trailer Package, 11" x 3" Brakes		4	---- ---	---- ---	2409 882	
	Front and Rear Wheel, Front Shoe, P1, P2, Taxi, 11" x 3" Brakes		4	---- ---	---- ---	2401 806	
	Front and Rear Wheel, Rear Shoe, P1, P2, Taxi, 11" x 3" Brakes		4	---- ---	---- ---	2401 807	
	Front Wheel, P2, D2, Police w/Disc Brakes	8	4	---- ---	---- ---	2660 289	
	Rear Wheel, Front Shoe, P2, D2, Police w/Front Wheel Disc Brakes	8	2	---- ---	---- ---	2401 800	
	Rear Wheel, Rear Shoe, P2, D2, Police w/Front Wheel Disc Brakes	8	2	---- ---	---- ---	2401 801	

TYPE LETTERS Indicate: V - Valiant, L - Dart, R - Belvedere, W - Coronet, P - Plymouth, D - Dodge, C - Chrysler, Y - Imperial

★Indicates use as required. Numerals in parentheses ( ) refer to notes. Printed in U.S.A.

⊟Indicates parts not listed in any previous parts book. Prices and specifications subject to change without notice.

March 1966 Supersedes May 1965. * Indicates change or addition.

MyMopar.com

CODE	PART NAME AND DESCRIPTION	CYL	PER CAR	VALIANT / DART	PLYMOUTH BELVEDERE / DODGE CORONET	PLYMOUTH FURY / DODGE POLARA / CHRYSLER	IMPERIAL
5-03-0	**WHEEL BRAKE SHOE AND LINING - Cont'd**						
5-03-6	SHOE, Front Wheel, 9" Brakes	6	4	2072 664			
	Rear Wheel, 9" Brakes	6	4	2072 670			
	Front Wheel, 10" Brakes		4	2533 818	2260 812		
	Rear Wheel, 10" Brakes		4	2533 854	2260 812		
	Front Wheel, 11" x 2 3/4" Brakes, P1, P2, All, D2, C1, except Sta. Wgn.		4	---- ---	---- ---	2409 868	
	Rear Wheel, 11" x 2" Brakes, P1, P2, All, D2, C1, except Sta. Wgn.		4	---- ---	---- ---	2409 918	
	Front Wheel, 11" x 3" Brakes		4	---- ---	2260 654	2260 654	
	Rear Wheel, 11" x 2 1/2" Brakes		4	---- ---	2260 886	2260 886	
	Rear Wheel, 11" x 3" Brakes		4	---- ---	---- ---	2260 654	
5-03-23	SPRING, Brake Shoe Return, Front and Rear Wheel, 9" Brakes	6	8	2072 719			
	Front and Rear Wheel, Front Shoe, 10" Brakes		4	2267 044	2267 044		
	Front and Rear Wheel, Rear Shoe, 10" Brakes		4	2260 835	2260 835		
	Front and Rear Wheel, 11" Brakes		8	---- ---	2260 789	2260 789	2260 789
	Front & Rear Wheel 11" Brakes, 4 D., R-L, W-L, PL, Taxi		8	---- ---	*2768 024	*2768 024	
5-05-0	**DISC BRAKES**						
5-05-1	HOUSING, Front Wheel, Right, P, D, Police	8	1	---- ---	---- ---	*2781 632	
	Left, P, D, Police	8	1	---- ---	---- ---	*2781 633	
	Front Wheel, Right		1	2660 292			
	Left		1	2660 293			
5-05-2	SCREW & WASHER, Frt. Wheel Disc. Brake Hsg. Shield Mtg.		4	*2781 018			
5-05-3	HUB, w/DISC, Front Wheel, P, D, Police 11" x 2 1/2" Brakes	8	1	---- ---	---- ---	*2534 144-5	
	HUB and DISC, Right		1	2660 296			
	Left		1	2660 297			
5-05-8	SPRING, Front Wheel, Shoe, P, D, Police	8	2	---- ---	---- ---	2534 160	
5-05-9	SEAL and BOOT PACKAGE, Front Wheel, P, D, Police		2	*2808 225	---- ---	*2585 298	
5-05-10	PISTON, Partial, Front Wheel, P, D, Police	8	8	---- ---	---- ---	2534 133	
	Front Wheel Disc Brake		8	*2781 011			
5-05-12	PAD, Front Wheel, Piston, P, D, Police	8	8	---- ---	---- ---	2534 135	
5-05-13	SPRING, Front Wheel, Piston Return, P, D, Police	8	8	---- ---	---- ---	2534 140	
5-05-14	RING, Front Wheel, Boot Retaining P, D, Police	8	8	---- ---	---- ---	*2534 139	
5-05-16	SHIELD, Front Wheel, Splash, P, D, Police	8	1	---- ---	---- ---	*2534 156-7	
	Front Wheel, w/Disc Brakes		2	⊟2781 539			
5-05-17	SEAL, Front Wheel, Crossover, P, D, Police	8	2	---- ---	---- ---	2534 141	
	Splash Shield to Knuckle, P, D, Police	8	2	---- ---	---- ---	2534 197	
	Splash Shield to Knuckle		2	2768 037			
5-05-32	SHIELD & CLIP, Front Wheel Disc Brake Hsg.		2	*2781 015			
5-05-34	VALVE, Brake Line Proportioning		1	2660 298			
5-05-38	VALVE, Brake Line Residual, Front Wheel P, D		1	2643 818	---- ---	2643 818	

TYPE LETTERS Indicate: V - Valiant, L - Dart, R - Belvedere, W - Coronet, P - Plymouth, D - Dodge, C - Chrysler, Y - Imperial

★Indicates use as required. Numerals in parentheses ( ) refer to notes. Printed in U.S.A.

⊟Indicates parts not listed in any previous parts book. Prices and specifications subject to change without notice.

* Indicates change or addition. March 1966 Supersedes May 1965.

MyMopar.com

CODE	PART NAME AND DESCRIPTION	CYL	PER CAR	VALIANT / DART	PLYMOUTH BELVEDERE / DODGE CORONET	PLYMOUTH FURY / DODGE POLARA / CHRYSLER	IMPERIAL
5-12-0	**WHEEL CYLINDER PISTON PUSH ROD**						
5-12-1	ROD, 10" and 11" Brakes		8	2260 787	2260 787	2260 787	2260 787
5-13-0	**WHEEL BRAKE SUPPORT**						
5-13-1	SUPPORT, Front Wheel, 9" Brakes	6	2	2533 079			
	Rear Wheel, Right, 9" Brakes	6	1	2533 076			
	Rear Wheel, Left, 9" Brakes	6	1	2533 077			
	Front Wheel, Right, 10" Brakes		1	2534 732	2265 581		
	Front Wheel, Left, 10" Brakes		1	2534 733	2265 581		
	Rear Wheel, Right, 10" Brakes		1	2534 726	2405 704		
	Rear Wheel, Left,10" Brakes		1	2534 727	2405 705		
	Front Wheel, 11" x 3" Brakes, Police, Taxi, Heavy Duty and Trailer Package		2	---- ---	2265 563		
	Rear Wheel, Right, 11" x 2 1/2" Brakes, Police, Taxi, Heavy Duty and Trailer Package		1	---- ---	2405 728	2405 728	
	Rear Wheel, Left, 11" x 2 1/2" Brakes, Police, Taxi, Heavy Duty and Trailer Package		1	---- ---	2405 729	2405 729	
	Front Wheel, 11" x 2 3/4" Brakes, P1, P2, All, D2, C1, except Sta. Wgn.		2	---- ---	---- ---	2405 766	
	Rear Wheel, Right, 11" x 2" Brakes, P1, P2, All, D2, C1, except Sta. Wgn.		1	---- ---	---- ---	2405 714	
	Rear Wheel, Left, 11" x 2" Brakes, P1, P2, All, D2, C1, except Sta. Wgn.		1	---- ---	---- ---	2405 715	
	Front Wheel, 11" x 3" Brakes, D2, C1, Sta. Wgn., C2, C3	8	2	---- ---	---- ---	2405 776	2266 867
	Rear Wheel, Right, 11" x 2 1/2" Brakes, P2, w/426 cu. in. Engine, D2, C1, Sta. Wgn., C2, C3 except Sta. Wgn.	8	1	---- ---	2405 728	2405 728	
	Rear Wheel, Left, 11" x 2 1/2" Brakes, P2, w/426 cu. in. Engine, D2, C1, Sta. Wgn., C2, C3 except Sta. Wgn.	8	1	---- ---	2405 729	2405 729	
	Rear Wheel, Right, 11" x 3" Brakes, D2 w/426 cu. in. Engine, P1, P2, D2, Police and Taxi, C3 Sta. Wgn., P, D, C, All w/Trailer Package		1	---- ---	---- ---	2405 752	2405 752
	Rear Wheel, Left, 11" x 3" Brakes, D2 W/426 cu. in. Engine, P1, P2, D2, Police and Taxi, C3 Sta. Wgn., P, D, C, All w/Trailer Package		1	---- ---	---- ---	2405 753	2405 753
5-13-7	GASKET, Brake Support, Rear		4	2467 095	2467 173	2467 173	2467 173
5-13-9	BOLT, Support Mounting, Front, Upper, 9" Brakes	6	4	2072 682			
	Front, Lower, 9" Brakes	6	4	2072 681			
	Front, Upper, 10" and 11" Brakes		4	2207 604	2207 604	2207 604	
	Front, Lower, 10" and 11" Brakes		4	2207 606	2207 606	2207 606	
	Front Wheel, 7/16" - 20 x 1 9/16"	8	4	---- ---	---- ---	---- ---	2207 604
	Front Wheel, 7/16" - 20 X 2 7/16"	8	2	---- ---	---- ---	---- ---	2401 501
	Front Wheel, 7/16" - 20 x 2 7/8"	8	2	---- ---	---- ---	---- ---	2401 502
	Rear Wheel		★	2265 572	2404 164	2404 164	2404 164
5-13-10	NUT, Support Mounting Bolt, Front, Upper		4	601 014	601 014	601 014	601 014
	Front, Lower, 9" Brakes		4	1825 351			
	Rear Wheel		★	1927 232	1927 232	1927 232	1927 232
	Rear Wheel		2	---- ---	*2404 168	*2404 168	*2404 168

TYPE LETTERS Indicate: V - Valiant, L - Dart, R - Belvedere, W - Coronet, P - Plymouth, D - Dodge, C - Chrysler, Y - Imperial

★Indicates use as required. Numerals in parentheses ( ) refer to notes. Printed in U.S.A.

⊟Indicates parts not listed in any previous parts book. Prices and specifications subject to change without notice.

March 1966 Supersedes May 1965. * Indicates change or addition.

MyMopar.com

CODE	PART NAME AND DESCRIPTION	CYL	PER CAR	VALIANT / DART	PLYMOUTH BELVEDERE / DODGE CORONET	PLYMOUTH FURY / DODGE POLARA / CHRYSLER	IMPERIAL
5-13-0	**WHEEL BRAKE SUPPORT - Cont'd**						
5-13-13	NUT & WASHER, Pedal Bracket		1	---- ---	*2076 232		
5-13-22	SEAL, to Steering Knuckle, 9" Brakes	6	2	2401 960			
	10" and 11" Brakes		2	2266 890	2266 890	2266 890	2266 890
5-13-35	COVER, Adjusting Screw Hole		8	2072 614	2072 614	2072 614	2072 614
5-20-0	**WHEEL BRAKE ADJUSTER**						
5-20-1	SCREW, Right, 9" Brakes	6	2	2260 826			
	Left, 9" Brakes	6	2	2260 827			
	Right, 10" Brakes		2	2460 654	2460 654		
	Left, 10" Brakes		2	2460 655	2460 655		
	Right, 11" Brakes, Automatic Adjusting		2	---- ---	2260 782	2260 782	2260 782
	Left, 11" Brakes, Automatic Adjusting		2	---- ---	2260 783	2260 783	2260 783
	Right and Left, 11" Brakes, Manual Adjusting		4	---- ---	2265 201	2265 201	
5-20-4	SPRING, Lock, 11" Brakes, Manual Adjusting		4	---- ---	2265 203	2265 203	
5-20-9	LEVER, Automatic Adjusting, Right, 9" Brakes	6	2	2260 794			
	Left, 9" Brakes	6	2	2260 795			
	Right, 10" and 11" Brakes		2	2534 758	2260 794	2260 794	2260 794
	Left, 10" and 11" Brakes		2	2534 759	2260 795	2260 795	2260 795
5-20-10	CABLE, Automatic Adjusting, 9" Brakes	6	4	2266 273			
	10" Brakes		4	2401 513	2401 513		
	11" Brakes		4	---- ---	2266 270	2266 270	2266 270
5-20-11	GUIDE, Cable, Automatic Adjusting		4	2260 793	2260 793	2260 793	2260 793
5-20-15	NUT, Adjusting Screw Pivot, Automatic Adjusting, Right, 9" and 10" Brakes		2	2260 572	2260 572		
	Left, 9" and 10" Brakes		2	2260 573	2260 573		
	Right, 11" Brakes		2	---- ---	2260 670	2260 670	2260 670
	Left, 11" Brakes		2	---- ---	2260 671	2260 671	2260 671
	Manual Adjusting, Right and Left, 11" Brakes		4	---- ---	2260 671	2260 671	
5-20-17	SOCKET, Adjusting Screw, 9" and 10" Brakes		4	2260 824	2260 824		
	11" Brakes		4	---- ---	2265 068	2265 068	2265 068
5-20-18	WASHER, Adjusting Screw Socket End, Automatic Adjusting		4	2266 271	2266 271	2266 271	2266 271
	Front Wheel Adjusting Screw Socket End	8	2	---- ---	---- ---	---- ---	2534 914
5-20-20	SPRING, Automatic Adjusting, 9" Brakes	6	4	2266 272			
	10" Brakes		4	2534 760	2401 514		
	11" Brakes		4	---- ---	2265 069	2265 069	2265 069
5-25-0	**BRAKE SHOE GUIDE**						
5-25-9	PLATE, 10" Brakes		4	2267 045	2267 045		
	11" Brakes		4	---- ---	2260 788	2260 788	2260 788
5-26-0	**WHEEL BRAKE SHOE HOLD-DOWN SPRING**						
5-26-1	SPRING, 9" Brakes	6	8	2207 520			
	10" and 11" Brakes		8	2260 791	2260 791	2260 791	2260 791
5-26-2	SEAT, 10" and 11" Brakes		8	2401 957	2401 957	2401 957	2401 957
	RETAINER, Hold-Down, 10" and 11" Brakes		8	2260 792	2260 792	2260 792	2260 792

TYPE LETTERS Indicate: V - Valiant, L - Dart, R - Belvedere, W - Coronet, P - Plymouth, D - Dodge, C - Chrysler, Y - Imperial

★Indicates use as required. Numerals in parentheses ( ) refer to notes. Printed in U.S.A.

⊟Indicates parts not listed in any previous parts book. Prices and specifications subject to change without notice.

* Indicates change or addition. March 1966 Supersedes May 1965.

MyMopar.com

CODE	PART NAME AND DESCRIPTION	CYL	PER CAR	VALIANT / DART	PLYMOUTH BELVEDERE / DODGE CORONET	PLYMOUTH FURY / DODGE POLARA / CHRYSLER	IMPERIAL
5-26-0	**WHEEL BRAKE SHOE HOLD-DOWN SPRING - Cont'd**						
5-26-4	PIN, Front Wheel, 10" x 2 1/2" Brakes		4	2260 548	2260 548		
	11" x 2 3/4" and 11" x 3" Brakes		4	---- ---	2260 549	2260 549	2260 549
	Rear Wheel, 10" x 1 3/4" Brakes		4	2405 720			
	11" x 2" Brakes, P, D, C-1		4	---- ---	---- ---	*2405 720	
	10" x 2 1/2" and 11" x 2 1/2" Brakes		4	---- ---	2260 548	2260 548	
	11" x 3" Brakes		4	---- ---	2260 549	2260 549	2260 549
5-26-5	ANCHOR, 9" Brakes	6	8	2072 675			
5-27-0	**BRAKE PEDAL AND BUSHING**						
5-27-1	PEDAL, w/Manual Trans., w/o Power Brakes		1	2461 512			
	w/Auto. Trans., w/o Power Brakes		1	2265 949			
	w/Manual Trans., w/Power Brakes		1	2467 728			
	w/Auto Trans., w/Power Brakes		1	2467 732			
	w/Manual Trans., w/o Power Brakes		1	---- ---	2460 332		
	w/Manual Trans., w/Power Brakes		1	---- ---	2460 338		
	w/Auto. Trans., w/o Power Brakes		1	---- ---	2460 334		
	w/Auto Trans., w/Power Brakes		1	---- ---	2405 106		
	w/Manual Trans., w/o Power Brakes, P1, P2, D2, C1, C2		1	---- ---	---- ---	2461 717	
	w/Auto. Trans., w/o Power Brakes, P1, P2, D2, C1, C2		1	---- ---	---- ---	2461 719	
	w/Manual Trans., w/Power Brakes, P1, P2, D2, C1, C2		1	---- ---	---- ---	2461 772	
	w/Auto. Trans., w/Power Brakes, P1, P2, D2, C1, C2, C3		1	---- ---	---- ---	2461 703	2405 108
5-27-2	SLEEVE		1	2073 634			
	BUSHING		2	⊟2467 770	⊟2467 770	⊟2467 770	⊟2467 770
5-27-6	LOCK, Sleeve		1	2072 816			
5-27-9	BRACE, Pedal Bracket to Dash Panel		1	---- ---	2162 795		
5-27-12	NUT, Sleeve Screw		1	2208 008			
5-27-21	BUSHING, Pedal Hub		2	2072 822			
5-28-0	**BRAKE PEDAL PAD**						
5-28-8	PAD, w/Manual Trans.		1	1731 228	1731 228		
	w/Auto. Trans.		1	2260 071	2260 071		
	w/Manual Trans., w/o Bezel, P1, P2-L, P2-M, P2-H, D2-L, D2-M		1	---- ---	---- ---	2467 768	
	w/Auto. Trans., w/o Bezel		1	---- ---	---- ---	2461 709	
	w/Manual Trans., w/o BEZEL, P2-P, D2-H, D2-P, C1, C2, C3	8	1	---- ---	---- ---	*2530 426	
	w/Auto. Trans., w/BEZEL, P2-P, D2-H, D2-P, C1, C2, C3	8	1	---- ---	---- ---	2461 708	2405 091
5-28-9	BEZEL, Pedal Pad, w/Auto. Trans., Stainless Steel	8	1	---- ---	---- ---	*2467 766	
	w/Manual Trans.	8	1	---- ---	---- ---	2467 769	
5-29-0	**BRAKE PEDAL SHAFT**						
5-29-1	SHAFT, w/Manual Trans., w/o Power Brakes, P, D, C1, C2-M		1	---- ---	1730 009	2461 716	
	w/Auto. Trans., w/o Power Brakes		1	---- ---	1637 782	2405 105	
	w/Power Brakes		1	---- ---	2405 105	2405 105	2405 105

TYPE LETTERS Indicate: V - Valiant, L - Dart, R - Belvedere, W - Coronet, P - Plymouth, D - Dodge, C - Chrysler, Y - Imperial

★Indicates use as required. Numerals in parentheses ( ) refer to notes. Printed in U.S.A.

⊟Indicates parts not listed in any previous parts book. Prices and specifications subject to change without notice.

March 1966 Supersedes May 1965. * Indicates change or addition.

MyMopar.com

CODE	PART NAME AND DESCRIPTION	CYL	PER CAR	VALIANT / DART	PLYMOUTH BELVEDERE / DODGE CORONET	PLYMOUTH FURY / DODGE POLARA / CHRYSLER	IMPERIAL
5-31-0	**BRAKE PEDAL BRACKET**						
5-31-11	REINFORCEMENT, w/Power Brakes		1	---- ---	2401 405	2461 705	2260 069
	w/o Power Brakes		1	---- ---	2260 008	2461 723	
5-31-12	GASKET, Reinforcement		1	---- ---	2260 016	2461 707	2260 016
5-31-13	NUT, Pedal Bracket, w/Power Brakes		2	---- ---	---- ---	2076 232	
	Reinforcement		2	---- ---	2076 232	2076 232	
5-31-15	BRACKET, Pedal		1	2266 779			
	w/o Power Brakes, w/2 STUDS		1	---- ---	2405 124	2534 560	
	w/o Power Brakes, w/4 STUDS		1	---- ---	---- ---	2461 754	
	w/Power Brakes		1	---- ---	2405 100	2461 701	2405 100
	w/Manual Trans.	8	1	2534 563			
5-31-18	STRUT, Bracket to Dash Panel, w/o Power Brakes		1	---- ---	---- ---	2530 407	
5-34-0	**BRAKE PEDAL RETURN SPRING**						
5-34-1	SPRING, w/o Power Brakes		1	2260 710	*2260 710	2534 347	
5-34-6	SEAT, Spring, w/o Power Brakes		1	2260 709	2260 709	2260 709	
5-39-0	**MASTER CYLINDER**						
5-39-1	REPAIR PACKAGE, Master Cylinder, w/o Power Brakes, w/o Piston		1	2196 905	2196 905	2196 905	
	w/o Power Brakes, w/PISTON		1	2421 315	2275 516	2525 097	
	w/Power Brakes, w/PISTON		1	2298 939	2298 939	2298 939	2298 939
	w/Power Brakes, w/Disc Brakes, P2, D2, Police	8	1	---- ---	---- ---	2585 296	
	w/Disc Brakes		1	2585 603			
5-39-3	CYLINDER, Master, w/o Power Brakes		1	2421 353	2071 060	2409 977	
	w/Power Brakes		1	2275 519	2275 519	2275 519	2275 519
	CYLINDER and RESERVOIR, w/Manual Disc Brakes		1	2660 786			
	CYLINDER and RESERVOIR, w/Power Disc Brakes, P2, D2, Police	8	1	---- ---	---- ---	2534 325	
	w/Disc Power Brakes		1	2660 791			
5-39-11	BOLT, Mounting, w/o Power Brakes P, D, C1		4	---- ---	2260 046	2260 046	
5-39-18	GASKET, Master Cylinder to Dash, w/o Power Brakes		1	2401 862	2401 862	2401 862	
	Power Unit to Dash, w/Power Brakes		1	2401 862			
	Power Unit to Master Cylinder, w/Power Disc. Brakes		1	*2074 965			
5-39-20	COVER		1	2265 641	2265 641	2265 641	2265 641
5-39-21	SCREW, Cover		1	1556 675	1556 675	1556 675	1556 675
	SCREW, Auxiliary Reservoir, w/Disc Brakes		1	2660 783			
	P2, D w/Disc Brakes, Police	8	1	---- ---	---- ---	2534 329	
5-39-24	GASKET, Cover		1	2401 152	2401 152	2401 152	2401 152
	GASKET, Auxiliary Reservoir, w/Disc Brakes, P2, D, w/Power Brakes P2, D, Police	8	1	---- ---	---- ---	2534 328	
5-40-0	**MASTER CYLINDER BOOT**						
5-40-1	BOOT, w/o Power Brakes, C1, C2		1	1828 388	1828 388	1828 388	

TYPE LETTERS Indicate: V - Valiant, L - Dart, R - Belvedere, W - Coronet, P - Plymouth, D - Dodge, C - Chrysler, Y - Imperial

★Indicates use as required. Numerals in parentheses ( ) refer to notes. Printed In U.S.A.

⊟Indicates parts not listed in any previous parts book. Prices and specifications subject to change without notice.

* Indicates change or addition. March 1966 Supersedes May 1965.

MyMopar.com

CODE	PART NAME AND DESCRIPTION	CYL	PER CAR	VALIANT / DART	PLYMOUTH BELVEDERE / DODGE CORONET	PLYMOUTH FURY / DODGE POLARA / CHRYSLER	IMPERIAL
5-43-0	**MASTER CYLINDER VALVE**						
5-43-1	VALVE		1	1318 446	1318 446	1318 446	1318 446
5-44-0	**MASTER CYLINDER PISTON**						
5-44-8	STOP, w/o Power Brakes		1	1828 389	1828 389	1828 389	
	w/Power Brakes		1	2265 635	2265 635	2265 635	2265 635
5-44-9	SCREW, Stop, w/Power Brakes		1	2200 341	2200 341	2200 341	2200 341
5-45-0	**MASTER CYLINDER PISTON CUP**						
5-45-8	CUP, Brake Master Cylinder Piston P,D	8	1	---- ---	---- ---	958 659	
5-46-0	**MASTER CYLINDER PISTON RETURN SPRING**						
5-46-1	SPRING		1	1738 268	1738 268	1738 268	1738 268
5-47-0	**MASTER CYLINDER PISTON PUSH ROD**						
5-47-4	BOLT, End		1	2201 181	2201 181	2201 181	2201 181
5-47-8	NUT, End Bolt		1	2122 266	2122 266	2122 266	2122 266
5-52-0	**MASTER CYLINDER BRAKE TUBE**						
5-52-3	NUT, Master Cylinder Brake Tube, Master Cylinder End		1	1828 461	1828 461	1828 461	1828 461
	Tee End		1	1739 226	1739 226	1739 226	1739 226
5-52-62	CONNECTOR		1	1828 396	1828 396	1828 396	1828 396
5-53-0	**BRAKE TUBING AND COVERS**						
5-53-3	TUBING, 25 Foot Roll, 3/16" O.D.		★	1843 251	1843 251	1843 251	1843 251
	1/4" O.D.		★	1843 252	1843 252	1843 252	1843 252
	5/16" O.D.		★	1843 253	1843 253	1843 253	1843 253
	3/8" O.D.		★	1843 254	1843 254	1843 254	1843 254
5-53-4	COVER, Tubing, 25 Foot Roll, for 3/16" O.D. Tubing		★	1843 257	1843 257	1843 257	1843 257
	For 1/4" O.D. Tubing		★	1843 258	1843 258	1843 258	1843 258
5-53-6	SHIELD, Brake Tube to Gear Shift	8	1	1739 230			
5-54-0	**REAR AXLE BRAKE TUBE**						
5-54-4	NUT, Outer		2	2643 974	2643 974	2643 974	2643 974
5-56-0	**BRAKE TUBE CLIP**						
5-56-2	CLIP		★	2465 517			
			★	1119 423	1119 423	1119 423	1119 423
			★	---- ---	2467 719	2467 719	
			★	2123 341	2123 341	2123 341	2123 341
5-57-0	**BRAKE TUBE BRACKET**						
5-57-2	BRACKET, Front		2	---- ---	---- ---	2467 899	
		8	2	---- ---	---- ---	---- ---	2123 212
	Rear		1	---- ---	2208 892		
			1	---- ---	---- ---	2460 676	

TYPE LETTERS Indicate: V - Valiant, L - Dart, R - Belvedere, W - Coronet, P - Plymouth, D - Dodge, C - Chrysler, Y - Imperial

★Indicates use as required. Numerals in parentheses ( ) refer to notes. Printed in U.S.A.

⊟Indicates parts not listed in any previous parts book. Prices and specifications subject to change without notice.

March 1966 Supersedes May 1965. * Indicates change or addition.

MyMopar.com

CODE	PART NAME AND DESCRIPTION	CYL	PER CAR	VALIANT / DART	PLYMOUTH BELVEDERE / DODGE CORONET	PLYMOUTH FURY / DODGE POLARA / CHRYSLER	IMPERIAL
5-57-0	**BRAKE TUBE BRACKET - Cont'd**						
5-57-2	BRACKET, Brake Hose to Tube, w/Disc Brakes, right		1	2660 874			
	Left		1	2660 873			
	P2, D, Police, w/Front Disc Brakes, Right	8	1	---- ---	---- ---	2643 813	
	Left	8	1	---- ---	---- ---	2643 812	
5-58-0	**BRAKE TUBE TEE**						
5-58-1	TEE, Master Cylinder Tube to Brake Tube		1	2460 741	2207 937	2467 634	2123 218
	Rear Axle Brake Tube		1	1940 621	1118 161	1118 161	2467 636
	SCREW, Rear Axle Brake Tube		1	⊟6026 009			
5-58-2	SCREW, Brake Tube Tee	8	1	---- ---	---- ---	6023 133	6023 133
5-62-0	**BRAKE FLEXIBLE HOSE**						
5-62-1	HOSE, Front, Front Disc Brake, P2, D	8	2	---- ---	---- ---	2643 820	
	HOSE, Front		2	2534 613			
	UP TO 151951 on P1, P2, UP TO 148745 on C1, C2, C3		2	---- ---	2208 495	2467 892	2208 496
	AFTER 151951 on P1, P2, AFTER 48745 on C1, C2, C3		2	---- ---	---- ---	2534 613	
			2	---- ---	2208 495	2467 892	2208 496
	Rear		1	1739 215	2207 918	1739 249	1739 215
	w/Disc Brakes		2	2660 871			
5-62-7	GASKET, Front Wheel Hose, w/Power Brake		2	2072 612			
			2	692 166	692 166	692 166	692 166
5-62-20	LOCK, Brake Hose to Bracket		3	2208 893	2208 893	2208 893	2208 893
5-63-0	**WHEEL CYLINDER REPAIR PACKAGE**						
5-63-1	REPAIR PACKAGE, Wheel Cylinder, Front, 9" Brakes	6	2	2084 788			
	Rear, 9" Brakes	6	2	2084 789			
	Front, 10" and 11" Brakes		2	2275 535	2275 535	2275 535	2275 535
	Rear, 10" and 11" Brakes		2	2275 536	2275 536	2275 536	2275 536
	Rear, 11" x 2 1/2" Brakes, w/Front Disc Disc Brake, P2, D	8	2	---- ---	---- ---	2585 557	
5-63-3	REPAIR PACKAGE, Wheel Cylinder Piston, Front, 9" Brakes	6	2	2084 790			
	Rear, 9" Brakes	6	2	2084 791			
	Front, 10" and 11" Brakes		2	2275 539	2275 539	2275 539	2275 539
	Rear, 10" and 11" Brakes		2	2275 540	2275 540	2275 540	2275 540
	Rear, 11" x 2 1/2" Brakes, Police w/Front Disc Brake, P2, D	8	2	---- ---	---- ---	2585 558	
5-64-0	**WHEEL BRAKE CYLINDER**						
5-64-1	CYLINDER, Front Wheel, w/9" Brakes	6	1	*2072 616-7			
	10" Brakes		1	*2265 362-3			
			1	---- ---	*2265 362-3		
	Right		1	---- ---	---- ---	*2265 363	*2265 363
	Left		1	---- ---	---- ---	*2265 362	*2265 362
	CYLINDER, Rear Wheel, w/9" Brakes	6	2	*2072 632			
	10" Brakes		2	*2460 666			
			2	---- ---	*2460 666	*2460 666	*2460 666
	w/Front Disc Brakes	8	2	---- ---	---- ---	*2534 915	
5-64-2	SCREW, Mounting, Front Wheel	6	4	6023 963			
	Rear Wheel	6	4	2072 615			
	Front and Rear Wheel		8	2266 876	2266 876	2266 876	2266 876
5-66-0	**WHEEL CYLINDER INLET CONNECTOR**						
5-66-6	INSERT, Rear Wheel Brake Cyl. Tube		2	⊟2072 678	⊟2072 678	⊟2072 678	⊟2072 678

TYPE LETTERS Indicate: V - Valiant, L - Dart, R - Belvedere, W - Coronet, P - Plymouth, D - Dodge, C - Chrysler, Y - Imperial

★Indicates use as required. Numerals in parentheses ( ) refer to notes. Printed in U.S.A.
⊟Indicates parts not listed in any previous parts book. Prices and specifications subject to change without notice.
* Indicates change or addition. March 1966 Supersedes May 1965.

MyMopar.com

CODE	PART NAME AND DESCRIPTION	CYL	PER CAR	VALIANT / DART	PLYMOUTH BELVEDERE / DODGE CORONET	PLYMOUTH FURY / DODGE POLARA / CHRYSLER	IMPERIAL
5-67-0	**WHEEL CYLINDER BLEEDER SCREW**						
5-67-1	SCREW		4	2072 658	2072 658	2072 658	2072 658
	SCREW, P2, D, Police, Disc Brakes		2	*2781 019	---- ---	*2534 142	
5-69-0	**WHEEL CYLINDER BOOT**						
5-69-1	BOOT, Front Wheel, 9" Brakes	6	4	2072 625			
	10" Brakes		4	2260 840			
			4	---- ---	2260 840	2260 840	2260 840
	Rear Wheel, 9" Brakes	6	4	2072 679			
	10" Brakes		4	2260 846			
			4	---- ---	2260 846	2260 846	2260 846
5-70-0	**WHEEL CYLINDER PISTON**						
5-70-1	PISTON, Front Wheel, 9" Brakes	6	4	2072 655			
	10" Brakes		4	2260 837			
			4	---- ---	2260 837	2260 837	2260 837
	Rear Wheel, 9" Brakes	6	4	2072 656			
	10" Brakes		4	2260 843			
	Except Police on R and W		4	---- ---	2260 843	2260 843	2260 843
	Police and Heavy Duty		4	---- ---	2401 938		
	P2, D2, w/Disc Brakes, Police	8	4	---- ---	---- ---	2534 922	
5-71-0	**WHEEL CYLINDER PISTON CUP**						
5-71-1	CUP, Front Wheel, 9" Brakes	6	4	1669 337			
	10" Brakes		4	2260 838	2260 838	2260 838	
	Rear Wheel, 9" Brakes	6	4	2072 636			
	Police and Heavy Duty		4	---- ---	2072 636		
	10" Brakes		4	2260 844			
			4	---- ---	2260 844	2260 844	2260 844
	w/Disc Brakes, Police, P2, D, 11" x 2 1/2" Brakes	8	4	---- ---	---- ---	2534 923	
5-71-2	SPRING, Front Wheel		2	2260 839	2260 839	2260 839	2260 839
	Rear Wheel, 9" Brakes	6	2	2072 637			
	Rear Wheel Brake Cyl. Piston		2	*1923 765	*1923 765	*1923 765	*1923 765
5-100-0	**POWER BRAKE POWER UNIT**						
5-100-1	REPAIR PKGE., Power Unit Bendix		1	2075 001			
	For Midland Ross, Power Unit 2460652, Factory Installed, Type 1		1	---- ---	2495 069		
	For Midland Ross, Power Unit 2534371, Factory Installed, Type 2		1	---- ---	2585 549		
	Kelsey Hayes, Factory Installed		1	---- ---	2525 437	2525 477	
	For Midland Ross, Power Unit 2409974 Factory Installed Type 1		1	---- ---	---- ---	2495 069	
	For Midland Ross, Power Unit 2534372, Factory Installed, Type 2		1	---- ---	---- ---	⊟2808 278	
	For Midland Ross, Power Unit 2585319, Field Installed, Type 1		1	---- ---	---- ---	2585 539	
	For Midland Ross, Power Unit 2585319, Field Installed Type 2		1	---- ---	---- ---	⊟2808 278	
	For Midland Ross, Power Unit 2409984, Field Installed		1	---- ---	2525 007		
5-100-2	POWER UNIT, Bendix		1	2467 584			
	Midland Ross or Kelsey Hayes		1	---- ---	2525 427		
	Midland Ross or Kelsey Hayes, P, D, C		1	---- ---	---- ---	2525 467	
	Bendix	8	1	---- ---	---- ---	---- ---	2409 224

TYPE LETTERS Indicate: V - Valiant, L - Dart, R - Belvedere, W - Coronet, P - Plymouth, D - Dodge, C - Chrysler, Y - Imperial

★Indicates use as required. Numerals in parentheses ( ) refer to notes. Printed in U.S.A.

⊟Indicates parts not listed in any previous parts book. Prices and specifications subject to change without notice.

March 1966 Supersedes May 1965. * Indicates change or addition.

MyMopar.com

CODE	PART NAME AND DESCRIPTION	CYL	PER CAR	VALIANT / DART	PLYMOUTH BELVEDERE / DODGE CORONET	PLYMOUTH FURY / DODGE POLARA / CHRYSLER	IMPERIAL
5-100-0	**POWER BRAKE POWER UNIT - Cont'd**						
5-100-2	POWER UNIT - Cont'd						
	Bendix, P2, D2, Police, w/Disc Brakes	8	1	---- ---	---- ---	2530 048	
	Midland Ross, for Replacement of Unit in Package 2585319		1	---- ---	---- ---	2585 503	
	Midland Ross, Replacement Package, Field Installed		1	---- ---	2421 355		
5-100-4	DIAPHRAGM, Power Piston, Kelsey Hayes . . .		1	---- ---	2530 011	2530 011	
	DIAPHRAGM and PLATE, Type 2, Midland Ross		1	---- ---	*2660 771	*2660 771	
5-100-5	RETAINER, Diaphragm		1	2074 977			
5-100-7	COVER and STUDS, Kelsey Hayes		1	---- ---	2530 030	2530 030	
	SHELL, Power Unit, Front		1	2074 990			
5-100-9	HOUSING and STUDS, Front, Kelsey Hayes . .		1	---- ---	2530 024	2530 024	
5-100-15	SPRING, Piston		1	2074 999			
	SPRING, Plunger Return		1	---- ---	2660 764	2660 764	
5-100-16	RETAINER, Plunger Return Spring		1	---- ---	2660 765	2660 765	
5-100-19	SEAL, Guide, Kelsey Hayes		1	---- ---	2530 025	2530 025	
5-100-20	ROD, Push, Type 1		1	2074 998	2074 998	2530 046	
	ROD, Plunger Push, P1, P2, D, C1, C2, Midland Ross, Type 1		1	---- ---	---- ---	2585 545	
	ROD, Push, Midland Ross, Type 2		1	---- ---	2660 773	2660 769	
5-100-26	GUARD, Brake Pedal Link		1	2467 592			
	BOOT, Control Piston, Push Rod, Kelsey Hayes		1	---- ---	2530 019	2530 019	
	BOOT, Plunger, Push Rod, Midland Ross . . .		1	---- ---	2401 165	2401 165	
	BOOT, Valve Operating, Push Rod, Bendix . . .		1	---- ---	---- ---	2534 349	2401 134
5-100-32	RETAINER, Push Rod, D-2, Midland Ross . .		1	---- ---	2401 166	2401 166	
	Kelsey Hayes		1	---- ---	2530 026	2530 026	
	Bendix, P, D	8	1	---- ---	---- ---	2401 885	2401 885
5-100-33	PISTON, Control		1	---- ---	2530 015	2530 036	
	PISTON, Power		1	---- ---	2530 003	2530 003	
5-100-34	LEVER and RING, Midland Ross, 5 Metal Prongs Type 2		1	---- ---	*2660 762	*2660 770	
5-100-47	PLATE, Piston, Front		1	2467 619			
5-100-62	SCREW, Push Rod, Midland Ross, Type 1 . . .		1	---- ---	2401 852	2401 852	
	SCREW, Midland Ross, Type 2		1	---- ---	2660 776	2660 776	
	Power Piston to Control Piston		1	---- ---	2530 012	2530 012	
5-100-86	INSERT, Reaction Ring		1	---- ---	2530 008	2530 008	
5-100-87	RING, Two Stage Reaction, Midland Ross		1	---- ---	2534 351	2534 351	
	Field Installation		1	---- ---	2401 866	2401 866	
	RING, Reaction, Kelsey Hayes		1	---- ---	2530 007	2530 007	
5-100-88	PLATE, Power Piston, Kelsey Hayes		1	---- ---	2530 006	2530 038	
5-100-90	ADAPTER		1	---- ---	2401 170	2401 170	

TYPE LETTERS Indicate: V - Valiant, L - Dart, R - Belvedere, W - Coronet, P - Plymouth, D - Dodge, C - Chrysler, Y - Imperial

★Indicates use as required. Numerals in parentheses ( ) refer to notes. Printed in U.S.A.

⊟Indicates parts not listed in any previous parts book. Prices and specifications subject to change without notice.

* Indicates change or addition. March 1966 Supersedes May 1965.

MyMopar.com

5-100-0 POWER BRAKE POWER UNIT - Cont'd

CODE	PART NAME AND DESCRIPTION	CYL	PER CAR	VALIANT / DART	PLYMOUTH BELVEDERE / DODGE CORONET	PLYMOUTH FURY / DODGE POLARA / CHRYSLER	IMPERIAL
5-100-91	SEAL, Adapter to Rear Housing		1	---- ---	2401 163	2401 163	
	Adapter to Hub		1	---- ---	2401 171	2401 171	
	Hub to Diaphragm Backing Plate, Midland Ross, Type 1		1	---- ---	2409 997	2409 997	
	Midland Ross, Type 2		1	---- ---	2660 772	2660 772	
	Rear Housing to Hub Tail Stock, Midland Ross, Type 2		1	---- ---	2660 763	2660 763	
5-100-92	WASHER, Bowed		1	2467 600			
	RING, Adapter Snap		1	---- ---	2401 164	2401 164	
5-100-105	REINFORCEMENT, Brake Pedal Bellows, at Dash Panels	8	1	---- ---	---- ---	---- ---	2217 843
5-100-119	DISC, Control Piston		1	---- ---	2530 016	2530 016	
	DISC, Reaction, P, D	8	1	---- ---	---- ---	2530 000	2530 000
5-100-133	VALVE, Floating, Kelsey Hayes		1	---- ---	2530 022	2530 022	
5-100-134	SEAL, Floating Valve, Kelsey Hayes		1	---- ---	2530 023	2530 023	
5-100-142	GUIDE, Power Piston, Kelsey Hayes		1	---- ---	2530 010	2530 010	
5-100-152	PACKING KIT		1	2075 000			
5-100-157	PLATE PACKAGE, Diaphragm and Piston		1	2240 625			
5-100-161	SEAL, Plunger Sleeve, Midland Ross, Type 1		1	---- ---	2401 172	2401 172	
	Midland Ross, Type 2		1	---- ---	2660 774	2660 774	
	Control Piston to "O" Ring, Kelsey Hayes		1	---- ---	2530 017	2530 017	
	Power Piston "O" Ring, Kelsey Hayes		1	---- ---	2530 005	2530 005	
	Cover to Power Piston, Kelsey Hayes		1	---- ---	2530 031	2530 031	
	Reaction Hub, Midland Ross, P, D	8	1	---- ---	---- ---	2266 942	2266 942
	Check Valve to Front Cylinder Shell, Midland Ross, P, D	8	1	---- ---	---- ---	2401 132	2401 132
	SEAL, Valve Body to Rear Cylinder Shell, P, D	8	1	---- ---	---- ---	2401 126	2401 126
5-100-164	RETAINER, Poppet Return Spring		1	*2074 977			
5-100-166	PLUNGER, Vacuum Valve		1	2467 618			
	RETAINER and PLUNGER PACKAGE, Push Rod		1	---- ---	2495 066	2495 066	
	PLUNGER, Push Rod, Midland Ross, Type 2		1	---- ---	2660 761	2660 761	
5-100-167	BUSHING, Push Rod to Plunger		2	---- ---	2401 853	2401 853	
5-100-169	ROD, Valve Operating		1	2467 597			
5-100-170	RING, Plunger Cushion, Midland Ross, Type 2		1	---- ---	2660 766	2660 766	
5-100-185	TUBE, Vacuum, w/BRACE		1	2467 596			
5-100-189	HUB, Bellows, Midland Ross, Type 2		1	---- ---	2660 767	2660 767	
	Tail Stock, Midland Ross, Type 2		1	---- ---	2660 768	2660 768	
5-100-191	PIN, Lever Pivot		1	2074 986			
5-100-192	WASHER, Pedal Link, Bowed		1	2075 005			
	Pedal Link Clevis, Bowed		2	2467 600			

TYPE LETTERS Indicate: V - Valiant, L - Dart, R - Belvedere, W - Coronet, P - Plymouth, D - Dodge, C - Chrysler, Y - Imperial

★Indicates use as required. Numerals in parentheses ( ) refer to notes. Printed in U.S.A.

⊟Indicates parts not listed in any previous parts book. Prices and specifications subject to change without notice.

March 1966 Supersedes May 1965. * Indicates change or addition.

MyMopar.com

CODE	PART NAME AND DESCRIPTION	CYL	PER CAR	VALIANT / DART	PLYMOUTH BELVEDERE / DODGE CORONET	PLYMOUTH FURY / DODGE POLARA / CHRYSLER*	IMPERIAL
5-100-0	**POWER BRAKE POWER UNIT - Cont'd**						
5-100-193	SPRING, Valve Return		1	2530 001			
5-100-194	PIN		2	2075 006			
5-100-195	RING, Diaphragm		1	---- ---	2401 161	2401 161	
	Lever Retaining, Midland Ross		1	---- ---	2401 858	2401 858	
	Control Piston Push Rod		1	---- ---	2530 021	2530 021	
	Plunger, Retaining, Midland Ross, Type 2		1	---- ---	2660 760	2660 760	
	RING, Bellows to Hub Retaining		1	---- ---	2448 764	2448 764	
5-100-196	SPRING, Poppet Return		1	2074 979			
5-100-197	SILENCER, Valve Body, P, D	8	1	---- ---	---- ---	2401 154	2401 154
5-100-200	BELLOWS, Front Housing to Hub, Midland Ross, Type 2		1	---- ---	2660 777	2660 777	
5-100-210	RETAINER, Front Cylinder Shell Seal	8	1	---- ---	---- ---	---- ---	2401 885
5-100-212	GROMMET, Vacuum Connector to Front Housing		1	---- ---	2467 576	2467 576	
5-102-0	**POWER BRAKE VACUUM TANK**						
5-102-2	TANK		1	2201 905			
5-102-11	NUT, Mounting		2	2076 232			
5-105-0	**POWER BRAKE VACUUM CHECK VALVE**						
5-105-1	VALVE, Check, Midland Ross, Type 1		1	---- ---	2530 032	2530 032	
	VALVE, Midland Ross, Type 2		1	---- ---	2660 775	2660 775	
	VALVE PACKAGE, Power Unit, Midland Ross		1	---- ---	*2495 067	*2495 067	
	Bendix Unit, V1, V2, L1, L2, P2, w/Disc Brakes, D2 w/Disc Brakes		1	2074 934	---- ---	2409 211	2409 211
5-105-6	GROMMET, Check Valve, Kelsey Hayes, D-2		1	---- ---	2530 033	2530 033	
5-110-0	**POWER BRAKE HOSE CONNECTOR**						
5-110-18	CONNECTOR, Single		1	*1944 154	---- ---	*1944 154	
	2 Way		1	*1944 092	*1944 092	*1944 092	*2405 466
5-111-0	**POWER BRAKE VACUUM HOSE**						
5-111-17	HOSE (11/32" I.D. - sold by the inch.)		★	883 031	883 031	883 031	883 031
5-113-0	**POWER BRAKE AIR CLEANER**						
5-113-17	FILTER, For Factory Installed Power Unit, Midland Ross		1	---- ---	2467 575	2467 575	
	Power Piston Silencer		1	---- ---	2530 004	2530 004	
	Air Cleaner, Kelsey Hayes		1	---- ---	2530 027	2530 027	
	Control Piston Push Rod, Kelsey Hayes		1	---- ---	2530 020	2530 020	
	Control Piston Push Rod Silencer and Air, Kelsey Hayes		2	---- ---	2530 014	2530 014	
	Valve Operating Push Rod Boot	8	1	---- ---	---- ---	---- ---	2401 155
5-113-20	HUB, Filter Retainer, For Factory Installed Power Unit		1	---- ---	2467 578	2467 578	

TYPE LETTERS Indicate: V - Valiant, L - Dart, R - Belvedere, W - Coronet, P - Plymouth, D - Dodge, C - Chrysler, Y - Imperial

★Indicates use as required. Numerals in parentheses ( ) refer to notes. Printed in U.S.A.

⊖Indicates parts not listed in any previous parts book. Prices and specifications subject to change without notice.

* Indicates change or addition. March 1966 Supersedes May 1965.

MyMopar.com

CODE	PART NAME AND DESCRIPTION	CYL	PER CAR	VALIANT / DART	PLYMOUTH BELVEDERE / DODGE CORONET	PLYMOUTH FURY / DODGE POLARA / CHRYSLER	IMPERIAL
5-113-0	**POWER BRAKE AIR CLEANER - Cont'd**						
5-113-21	COVER, Filter, For Factory Installed Power Unit		1	---- ---	2467 577	2467 577	
5-113-23	PLATE, Air Cleaner Filter, Kelsey Hayes . .		1	---- ---	2530 028	2530 028	
5-116-32	GASKET, Power Brake Inverted Flared Tube Connection V1, V2, P2, D		1	*2072 612	---- ---	* 692 166	

NOTES

TYPE LETTERS Indicate: V - Valiant, L - Dart, R - Belvedere, W - Coronet, P - Plymouth, D - Dodge, C - Chrysler, Y - Imperial

★Indicates use as required. Numerals in parentheses ( ) refer to notes. Printed in U.S.A.

⊟Indicates parts not listed in any previous parts book. Prices and specifications subject to change without notice.

March 1966 Supersedes May 1965. * Indicates change or addition.

MyMopar.com

GROUP 6 - CLUTCH

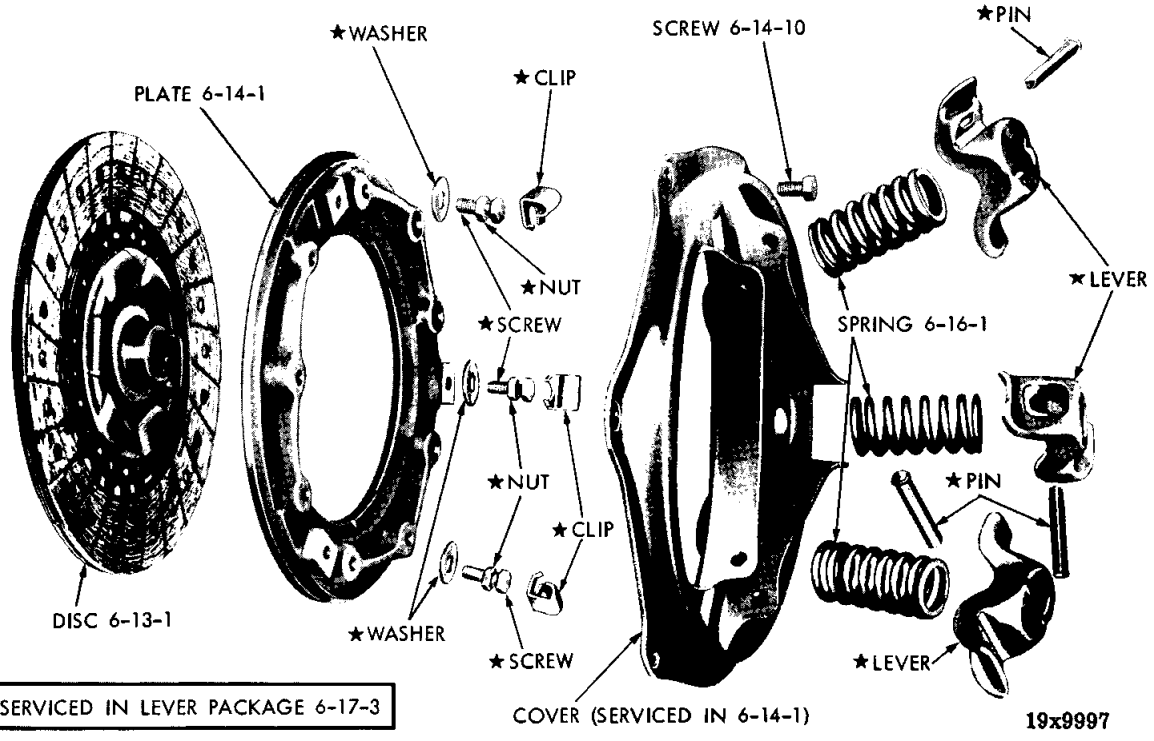

CLUTCH - 170 AND 225 CU. IN. ENGINE (3 SPRING TYPE)

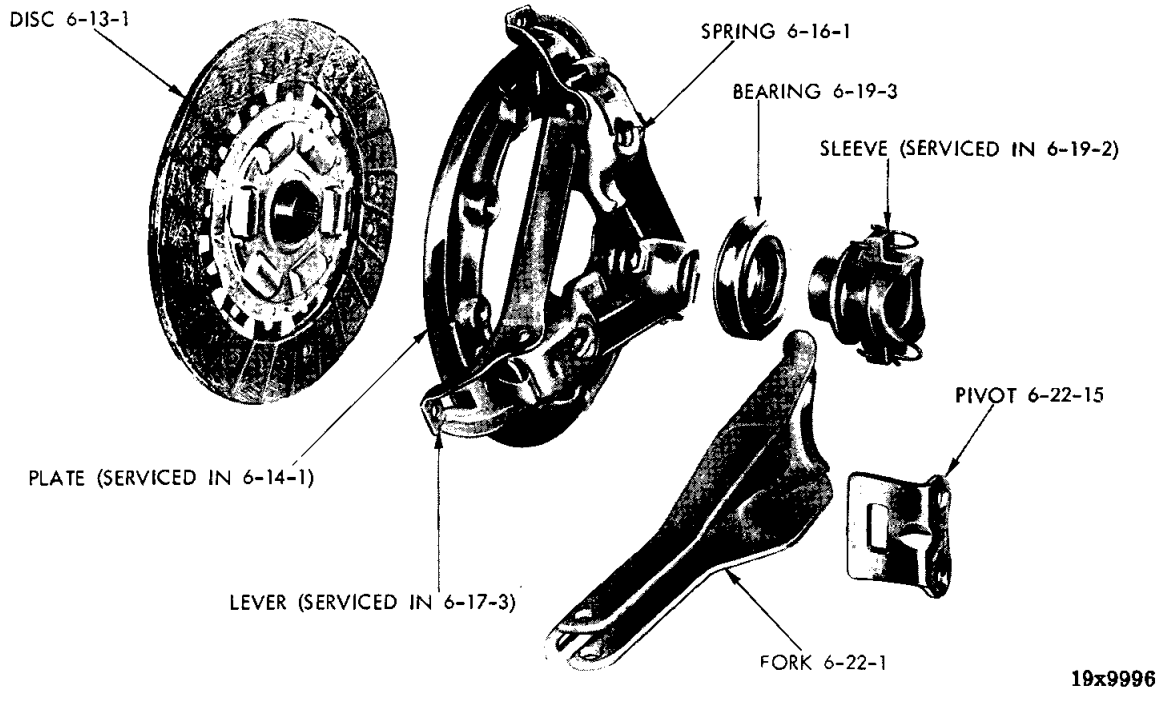

CLUTCH - 273 CU. IN. ENGINE

MyMopar.com

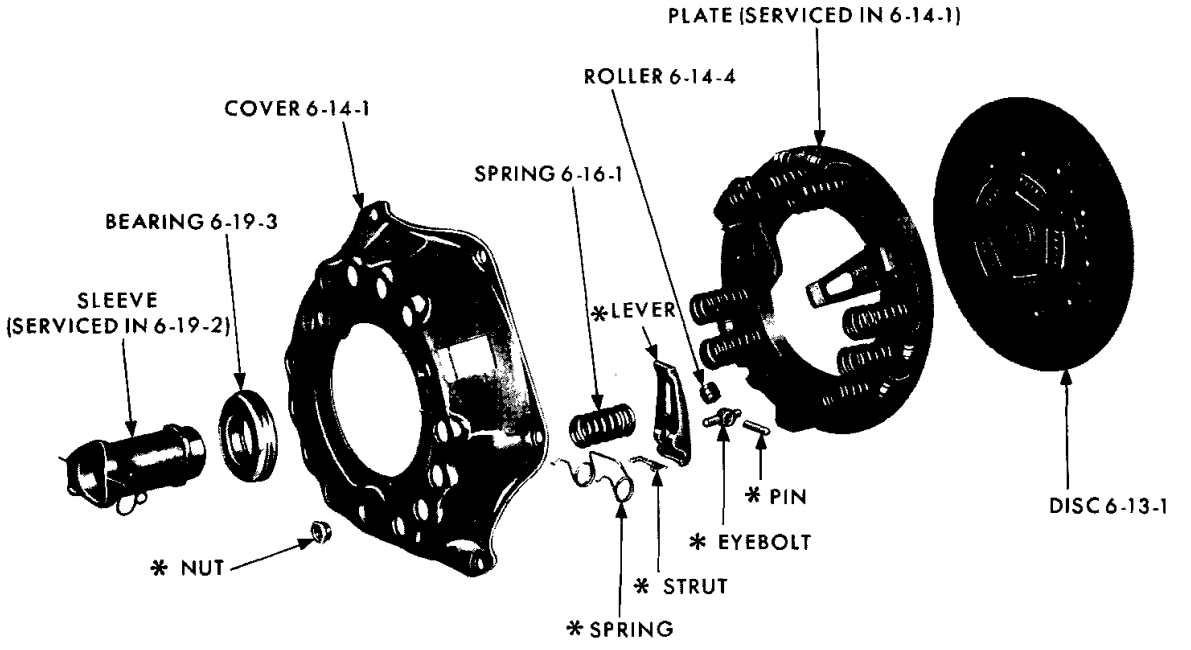

* SERVICED IN LEVER PACKAGE 6-17-3

19x8633C

CLUTCH PRESSURE PLATE AND DISC

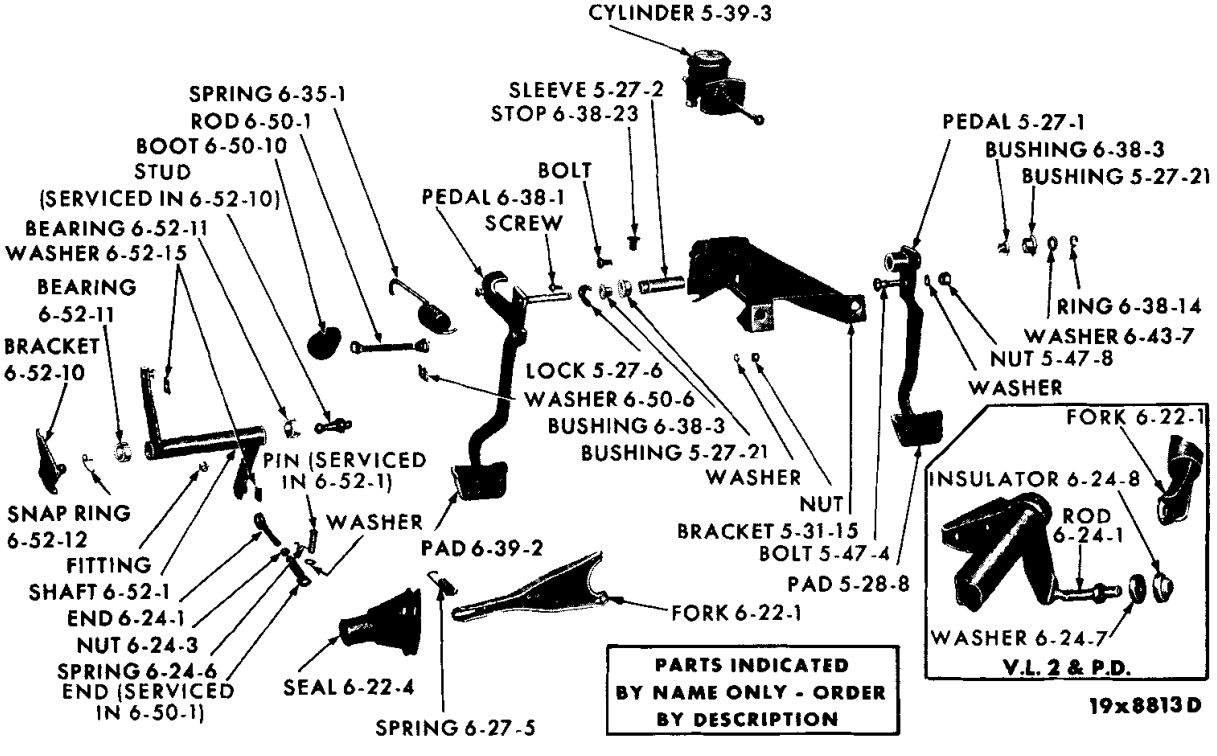

19x8813D

CLUTCH AND BRAKE PEDAL LINKAGE (MANUAL TRANSMISSION) - VALIANT AND DART

MyMopar.com

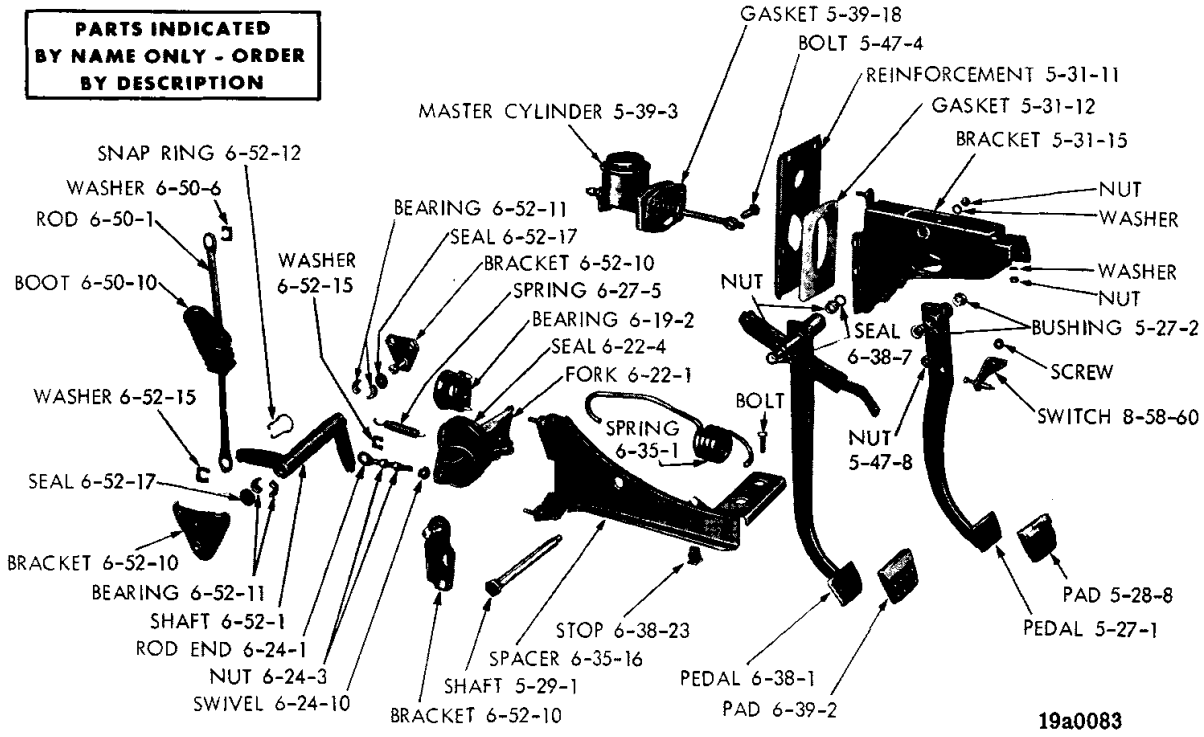

CLUTCH AND BRAKE PEDAL LINKAGE (MANUAL TRANSMISSION) - BELVEDERE AND CORONET

NOTES

MyMopar.com

CODE	PART NAME AND DESCRIPTION	CYL	PER CAR	VALIANT / DART	PLYMOUTH BELVEDERE / DODGE CORONET	PLYMOUTH FURY / DODGE POLARA / CHRYSLER	IMPERIAL

NOTES

TYPE LETTERS indicate: V - Valiant, L - Dart, R - Belvedere, W - Coronet, P - Plymouth, D - Dodge, C - Chrysler, Y - Imperial

★Indicates use as required.

⊟Indicates parts not listed in any previous parts book.

Printed in U.S.A.

Prices and specifications subject to change without notice.

September 4, 1964.

MyMopar.com

CODE	PART NAME AND DESCRIPTION	CYL	PER CAR	VALIANT / DART	PLYMOUTH BELVEDERE / DODGE CORONET	PLYMOUTH FURY / DODGE POLARA / CHRYSLER	IMPERIAL
6-01-0	**CLUTCH**						
6-01-3	CLUTCH PACKAGE, 9 1/8" Clutch	6	1	2279 893			
	9 1/4" Clutch	6	1	2525 475	2525 475	2525 475	
6-09-0	**CLUTCH HOUSING**						
6-09-1	HOUSING, w/170, 225,cu. in. Eng., 4 Speed Trans.	6	1	2468 431			
	w/170,225, cu. in. Eng., 3 Speed Trans.	6	1	2468 479	2468 479	2468 479	
	w/3 Speed Trans., 11" Clutch	6	1	---- ---	*2468 225	*2468 225	
	w/273 cu. in. Eng., 3 Speed Trans.	8	1	2463 411			
	w/273 cu. in. Eng., 4 Speed Trans.	8	1	2465 524	2465 524		
	w/273 cu. in. Eng., 3 Speed Trans.	8	1	---- ---	2468 482		
	w/426 cu. in. Eng., Hemispherical, 4 Speed Trans.	8	1	---- ---	2463 235	2463 235	
	w/361,383, cu. in. Eng., 3 Speed Trans.	8	1	---- ---	2468 448	2468 448	
	w/318 cu. in. Eng., 3 Speed Trans.	8	1	---- ---	2468 222	2468 222	
	w/361,383,413,426 cu. in. Eng., 4 Speed Trans.	8	1	---- ---	2468 370	2468 370	
6-09-11	STRUT, Housing to Cylinder Block, w/170, 225 cu. in. Eng., 3 and 4 Speed Trans.	6	1	2468 197	2468 197	2468 197	
6-10-0	**CLUTCH HOUSING PAN**						
6-10-2	PAN, w/170,225 cu. in. Eng., 3 Speed Trans.	6	1	2129 885	2129 885	2129 885	
	w/225 cu. in. Eng., 4 Speed Trans., except L	6	1	2129 885			
	w/225 cu. in. Eng., 11" Clutch, 3 Speed Trans., Taxi	6	1	---- ---	2468 810	2468 810	
	w/273 cu. in. Eng., 3 and 4 Speed Trans.	8	1	2463 414			
	w/273, 318 cu. in. Eng., 3 Speed Trans.	8	1	---- ---	2128 938	2128 938	
	w/426 cu. in. Eng., Hemispherical, 4 Speed Trans.	8	1	---- ---	2406 045		
	w/361,383,413,426 cu. in. Eng., 3 and 4 Speed Trans.	8	1	---- ---	2402 935	2402 935	
6-10-3	SCREW, Housing Pan, 5/16" x 11/16"		★	1947 953	1947 953	1947 953	1947 953
6-10-10	SEAL, Clutch Housing Pan, w/225 cu. in. Eng.	6	1	2129 886	2129 886	2129 886	
	w/273 cu. in. Eng.	8	1	2465 549			
	w/273, 318 cu. in. Eng.	8	1	---- ---	2128 939	2128 939	
6-13-0	**CLUTCH DISC**						
6-13-1	DISC, 9 1/8" Clutch	6	1	2298 904			
	9 1/4" Clutch	6	1	2448 336	2448 336	2448 336	
	11" Clutch, Taxi	6	1	---- ---	2409 683	2409 683	
	9 1/2" Clutch	8	1	2401 120			
	10" Clutch	6	1	---- ---	2200 069		
	10" Clutch	8	1	---- ---	2200 051	2200 051	
	10 1/2" Clutch	8	1	---- ---	2266 232	2266 232	
	10 1/2" Clutch, w/426 cu. in. Eng., Std.	8	1	---- ---	2266 232		
	10 1/2" Clutch, w/426 cu. in. Eng., Hemispherical, 4 Speed Trans.	8	1	---- ---	⊟2530 391		
6-13-4	FACING, Clutch Disc, 9 1/8" Clutch, w/170 cu. in. Eng., w/32 Rivet Holes	6	2	2073 684			
	9 1/8" Clutch, w/170 cu. in. Eng., w/24 Rivet Holes	6	2	2265 464			

TYPE LETTERS Indicate: V - Valiant, L - Dart, R - Belvedere, W - Coronet, P - Plymouth, D - Dodge, C - Chrysler, Y - Imperial

★Indicates use as required. Numerals in parentheses ( ) refer to notes. Printed in U.S.A.

⊟Indicates parts not listed in any previous parts book. Prices and specifications subject to change without notice.

* Indicates change or addition.

MyMopar.com

CODE	PART NAME AND DESCRIPTION	CYL	PER CAR	VALIANT / DART	PLYMOUTH BELVEDERE / DODGE CORONET	PLYMOUTH FURY / DODGE POLARA / CHRYSLER	IMPERIAL
6-13-0	**CLUTCH DISC - Cont'd**						
6-13-4	FACING - Cont'd						
	9 1/4" Clutch, w/170,225 cu. in. Eng., w/32 Rivet Holes	6	2	859 882	859 882		
	9 1/4" Clutch, w/170,225 cu. in. Eng., w/24 Rivet Holes	6	2	1820 454	1820 454		
	9 1/2" Clutch, w/273 cu. in. Eng.	8	2	2401 115			
	10" Clutch, w/225 cu. in. Eng., Front	6	1	---- ---	2201 218	2201 218	
	Rear	6	1	---- ---	2201 217	2201 217	
	10" Clutch, w/273,318 cu. in. Eng.	8	2	---- ---	1554 593	1554 593	
	10 1/2" Clutch, w/273,318,361,383,426 cu. in. Eng.	8	2	---- ---	2266 233	2266 233	
	10 1/2" Clutch, w/426 cu. in. Eng., Hemispherical	8	2	---- ---	2401 098		
	11" Clutch, w/225 cu. in. Eng., Taxi	6	2	---- ---	2409 685	2409 685	
6-13-8	RIVET, Facing, 1/4" lgh., 1/8" lgh		★	*660 146	*660 146	*660 146	
	1/4" lgh., 1/8" lgh		★	*1313 312	*1313 312	*1313 312	
6-14-0	**CLUTCH COVER AND PRESSURE PLATE**						
6-14-1	COVER, Includes PLATE, 9 1/8" Clutch	6	1	2525 465			
	9 1/4" Clutch	6	1	*2525 464	2525 464	2525 464	
	9 1/2" Clutch	8	1	*2768 150			
	10" Clutch	6	1	---- ---	2266 235		
	10" Clutch	8	1	---- ---	2122 254	2122 254	
	10 1/2" Clutch, w/273, 318 cu. in. Eng	8	1	---- ---	*2122 255	*2122 255	
	10 1/2" Clutch, w/361 cu. in. Eng., 3 and 4 Speed Trans.	8	1	---- ---	2122 255	2122 255	
	10 1/2" Clutch, w/413, 426, 383 Std., 4 Speed Trans	8	1	---- ---	*2409 688	*2409 688	
	10 1/2" Clutch, w/426 cu. in. Eng., 4 Speed Trans., w/11.1 Compression Ratio	8	1	---- ---	2530 390		
	11" Clutch	6	1	---- ---	2409 682		
	11" Clutch, w/225 cu. in. Eng., Taxi	6	1	---- ---	2409 682		
6-14-4	ROLLER, Centrifugal		★	---- ---	2122 262	*2122 262	
6-14-10	SCREW, Cover to Flywheel, 13/16" x 5/16"	6	6	---- ---	2200 050	2200 050	
	1" x 3/8"	8	6	---- ---	314 926	314 926	
	7/8" x 5/16"	6	6	307 555	307 555	307 555	
6-16-0	**CLUTCH PRESSURE SPRING**						
6-16-1	SPRING, w/9 Black Coils		★	2266 239			
	7 1/4 Red Coils		★	1067 037	1067 037	1067 037	
	6 3/4 White Coils		★	1406 504	1406 504	1406 504	
	8 3/8 Red Striped Coils		★	2208 268	2208 268	2208 268	
	6 3/4 Red Coils		★	2530 379	2530 379	*2530 379	
	7 3/4 Tan Coils		★	---- ---	*866 591	*866 591	
	7 Black Coils		★	---- ---	*1321 044		
	7 3/4 Lavender Coils		★	---- ---	*855 521		
	7 Light Green Coils		★	*2409 675			
6-17-0	**CLUTCH RELEASE LEVER**						
6-17-3	LEVER PACKAGE, 9 1/8" Clutch, w/6 SPRINGS	6	1	2279 894			
	9 1/8", 9 1/4" Clutch, w/3 SPRINGS	6	1	2525 473			
	9 1/4" Clutch	6	1	2240 634	2240 634		
	9 1/2" Clutch	8	1	2525 030	2525 030		
	10", 10 1/2", 11" Clutch		1	---- ---	2495 052	2495 052	

TYPE LETTERS Indicate: V - Valiant, L - Dart, R - Belvedere, W - Coronet, P - Plymouth, D - Dodge, C - Chrysler, Y - Imperial

★Indicates use as required. Numerals in parentheses ( ) refer to notes. Printed in U.S.A.

⊟Indicates parts not listed in any previous parts book. Prices and specifications subject to change without notice.

March 1966 Supersedes May 1965. * Indicates change or addition.

MyMopar.com

CODE	PART NAME AND DESCRIPTION	CYL	PER CAR	VALIANT / DART	PLYMOUTH BELVEDERE / DODGE CORONET	PLYMOUTH FURY / DODGE POLARA / CHRYSLER	IMPERIAL
6-19-0	**CLUTCH RELEASE BEARING**						
6-19-2	BEARING, w/SLEEVE, except 11" Clutch		1	2405 077	2405 077	2405 077	
	11" Clutch		1	---- ---	2461 494	2461 494	
	w/426 cu. in. Eng., Hemispherical	8	1	---- ---	2530 443		
6-19-3	BEARING, w/o Sleeve		1	658 998	658 998	658 998	
	w/426 cu. in. Eng., Hemispherical	8	1	---- ---	2530 444		
6-20-0	**CLUTCH RELEASE BEARING RETURN SPRING**						
6-20-14	SPRING		1	2073 687	2073 687	2073 687	
6-22-0	**CLUTCH RELEASE FORK**						
6-22-1	FORK		1	2461 485	2260 047	2260 047	
6-22-4	SEAL, Release Fork		1	2260 021	2260 021	2260 021	
6-22-15	PIVOT, Release Fork 9 1/8" Clutch	6	1	*2461 484			
	9 1/4" Clutch	6	1	*2260 719			
	9 1/2" Clutch	8	1	*2461 484			
	10" Clutch		1	---- ---	*2260 719	*2260 719	
	10 1/2" Clutch	8	1	---- ---	*2260 719	*2260 719	
	11" Clutch	6	1	---- ---	*2260 719		
6-22-17	PIN, Release Fork Rod	6	1	1324 090			
6-22-19	SPRING, Release Fork		1	2072 901	2072 901	2072 901	
6-24-0	**CLUTCH RELEASE ROD**						
6-24-1	ROD, Release		1	2461 481			
			1	---- ---	2401 739		
			1	---- ---	---- ---	2461 745	
	ROD, Interlock		1	*2530 423			
		6	1	*2530 423			
	w/225 cu. in. Eng.	6	1	---- ---	*2461 524		
	w/273, 318, 361 cu. in. Eng	8	1	---- ---	⊟2404 772		
			1	---- ---	---- ---	*2530 424	
		6	1	---- ---	---- ---	2461 760	
6-24-3	NUT, Rod Adjusting		1	1407 347	1407 347	1407 347	
6-24-6	SPRING, Release Fork	6	1	1634 508			
6-24-7	WASHER, Release Fork Rod		1	2461 483	2461 483	2461 483	
	WASHER, Release Fork Interlock		4	*631 217	*631 217	*631 217	
6-24-8	INSULATOR		1	2461 482	2461 482	2461 482	
6-24-10	SWIVEL, Interlock		1	*2404 859	2404 859	*2404 859	
6-24-14	CLAMP, Interlock		1	*2204 274	2204 274	*2204 274	
6-27-0	**CLUTCH RELEASE FORK RETURN SPRING**						
6-27-5	SPRING		1	2461 480	2260 023	2260 023	
6-35-0	**CLUTCH RELEASE OVERCENTER SPRING**						
6-35-1	SPRING	6	1	2266 784			
		8	1	2461 515			
	w/225 cu. in. Eng.	6	1	---- ---	2260 728		
	P1, w/Power Brake	6	1	---- ---	---- ---	2461 523	

TYPE LETTERS Indicate: V - Valiant, L - Dart, R - Belvedere, W - Coronet, P - Plymouth, D - Dodge, C - Chrysler, Y - Imperial

★Indicates use as required.
⊟Indicates parts not listed in any previous parts book.
* Indicates change or addition.

Numerals in parentheses ( ) refer to notes.
Prices and specifications subject to change without notice.

MyMopar.com

CODE	PART NAME AND DESCRIPTION	CYL	PER CAR	VALIANT / DART	PLYMOUTH BELVEDERE / DODGE CORONET	PLYMOUTH FURY / DODGE POLARA / CHRYSLER	IMPERIAL
6-35-0	**CLUTCH RELEASE OVER CENTER SPRING - Cont'd**						
6-35-1	SPRING Cont'd						
	w/273, 318 cu. in. Eng.	6	1	---- ---	2260 727		
	w/10", 11" Clutch, Interlock	6	1	---- ---	2260 727		
	w/383, 426 cu. in. Eng.	8	1	---- ---	2260 727		
	w/10", 11" Clutch		1	---- ---	*2461 749	2461 749	
6-35-9	HOOK, Over Center Spring		1	2266 777			
6-35-15	PIN, Clutch Release Over Center Spring		1	---- ---	---- ---	2461 748	
6-35-16	SPACER, Over Center Spring		1	---- ---	2460 344		
6-35-17	NUT, Over Center Spring		2	---- ---	2076 232	2076 232	
6-38-0	**CLUTCH PEDAL**						
6-38-1	PEDAL		1	2461 508			
	w/225 cu. in. Eng.	6	1	---- ---	2460 047		
		6	1	---- ---	---- ---	2461 725	
	w/10", 11" Clutch, w/225, 273, 318, 361, 426 cu. in. Eng.	8	1	---- ---	2405 114		
	w/10", 11" Clutch, w/318, 361, 383, 413, 426 cu. in. Eng.		1	---- ---	---- ---	2461 726	
	NUT, Pedal Shaft		1	---- ---	---- ---	1927 232	
6-38-3	BEARING, Pedal		2	---- ---	1946 377	1946 377	
	BUSHING		2	---- ---	*2467 771		
			2	⊟2467 770	⊟2467 770	⊟2467 770	
6-38-14	RING, Pedal Shaft Lock		1	2072 831			
6-38-23	STOP, Clutch Pedal		1	2266 820	2266 820	1940 147	
6-39-0	**CLUTCH PEDAL PAD**						
6-39-2	PAD		1	1731 228	1731 228		
	w/o Bezel		1	---- ---	---- ---	*2467 768	
	w/BEZEL	8	1	---- ---	*2530 426	*2530 426	
6-39-9	BEZEL, Pedal Pad	8	1	---- ---	2467 769	2467 769	
6-43-0	**CLUTCH PEDAL SHAFT**						
6-43-1	SHAFT		1	---- ---	2405 113		
6-43-7	WASHER, Pedal Shaft, Plain		1	2073 632			
			1	---- ---	---- ---	2461 774	
6-43-13	SEAL, Pedal Bearing		2	---- ---	1730 019	1730 019	
6-46-0	**CLUTCH PEDAL BRACKET**						
6-46-1	BRACKET, w/10", 11", Clutch, w/361, 383, 413, 426 cu. in. Eng.		1	---- ---	---- ---	2461 746	
6-46-7	NUT, w/WASHER, Pedal Bracket to Dash		2	---- ---	---- ---	2076 232	
6-50-0	**CLUTCH PEDAL ROD**						
6-50-1	ROD		1	2461 475	2401 725		
	P1, P2		1	---- ---	---- ---	2461 734	
	w/361, 383, 413, 426 cu. in. Eng.		1	---- ---	---- ---	2461 517	

TYPE LETTERS Indicate: V - Valiant, L - Dart, R - Belvedere, W - Coronet, P - Plymouth, D - Dodge, C - Chrysler, Y - Imperial

★Indicates use as required. Numerals in parentheses ( ) refer to notes. Printed in U.S.A.
⊟Indicates parts not listed in any previous parts book. Prices and specifications subject to change without notice.
March 1966 Supersedes May 1965. * Indicates change or addition.

MyMopar.com

CODE	PART NAME AND DESCRIPTION	CYL	PER CAR	VALIANT / DART	PLYMOUTH BELVEDERE / DODGE CORONET	PLYMOUTH FURY / DODGE POLARA / CHRYSLER	IMPERIAL
6-50-0	**CLUTCH PEDAL ROD - Cont'd**						
6-50-6	WASHER, Clutch Pedal Spring		1	2405 085	2405 085	2405 085	
	Pedal Dampener		1	2405 086	2405 086	2405 086	
	Torque Shaft Pin		1	2405 085	2405 085	2405 085	
6-50-10	BOOT, Clutch Pedal Rod		1	2266 783	2266 818	2266 818	
6-52-0	**CLUTCH TORQUE SHAFT**						
6-52-1	SHAFT, includes PINS		1	⊟2781 876			
		6	1	---- ---	---- ---	2467 741	
	w/10" Clutch, Interlock	6	1	---- ---	---- ---	2530 402	
	w/11" Clutch	6	1	---- ---	---- ---	2534 568	
	w/225 cu. in. Eng.	6	1	---- ---	2260 678		
	w/225 cu. in. Eng., w/10", 11", Clutch	6	1	---- ---	2421 399		
	w/273, 318, 361, 383, 426 cu. in. Eng.	8	1	---- ---	2421 399		
		8	1	---- ---	2421 399	⊟2534 568	
6-52-4	HOOK, Torque Shaft Spring	6	1	---- ---	---- ---	2530 430	
6-52-5	SPRING, Torque Shaft to Fork	6	1	---- ---	---- ---	2530 428	
	Torque Shaft Return	6	1	---- ---	---- ---	*2530 429	
6-52-10	BRACKET, Torque Shaft, Eng. End. w/273 cu. in. Eng.	6	1	2467 740			
	w/225 cu. in. Eng.	6	1	---- ---	2467 739		
	w/225 cu. in. Eng., 11" Clutch	6	1	---- ---	2467 744		
	w/273 cu. in. Eng.	8	1	2461 478			
	w/225 cu. in. Eng.	8	1	---- ---	2260 746		
	w/273, 318, 361, 383, 426 cu. in. Eng. w/STUD	8	1	---- ---	*2467 774		
	Frame End, w/170 cu. in. Eng.	6	1	2461 476			
	w/273 cu. in. Eng.	8	1	2530 435			
	w/225, 273, 318, 361, cu. in. Eng.		1	---- ---	2260 718		
	STUD, Eng. End		★	---- ---	2461 765	2461 765	
	STUD, Frame End		★	1829 383	---- ---	2461 766	
	SCREW, includes WASHER, Bracket Eng. End		2	6023 551	6023 551		
6-52-11	BEARING, Torque Shaft Pivot		4	2265 938	2265 938	2265 938	
6-52-12	RING, Pivot Snap, 1 1/8" I. D.		1	*2265 939			
	1 1/4" I. D.		1	2401 910	2401 910		
6-52-15	WASHER, Torque Shaft Pin		2	2405 085	2405 085	2405 085	
	Torque Shaft Dampener		2	2405 086	2405 086	2405 086	
6-52-17	SEAL, Torque Shaft		2	2265 942	2265 942	2265 942	

NOTES

TYPE LETTERS Indicate: V - Valiant, L - Dart, R - Belvedere, W - Coronet, P - Plymouth, D - Dodge, C - Chrysler, Y - Imperial

★Indicates use as required. Numerals in parentheses ( ) refer to notes. Printed in U.S.A.

⊟Indicates parts not listed in any previous parts book. Prices and specifications subject to change without notice.

* Indicates change or addition. March 1966 Supersedes May 1965.

MyMopar.com

CODE	PART NAME AND DESCRIPTION	CYL	PER CAR	VALIANT / DART	PLYMOUTH BELVEDERE / DODGE CORONET	PLYMOUTH FURY / DODGE POLARA / CHRYSLER	IMPERIAL

NOTES

TYPE LETTERS Indicate: V - Valiant, L - Dart, R - Belvedere, W - Coronet, P - Plymouth, D - Dodge, C - Chrysler, Y - Imperial

★Indicates use as required. Numerals in parentheses ( ) refer to notes. Printed in U.S.A.

⊟Indicates parts not listed in any previous parts book. Prices and specifications subject to change without notice.

May 1965, Supersedes Nov. 30, 1964.

MyMopar.com

GROUP 7 - COOLING

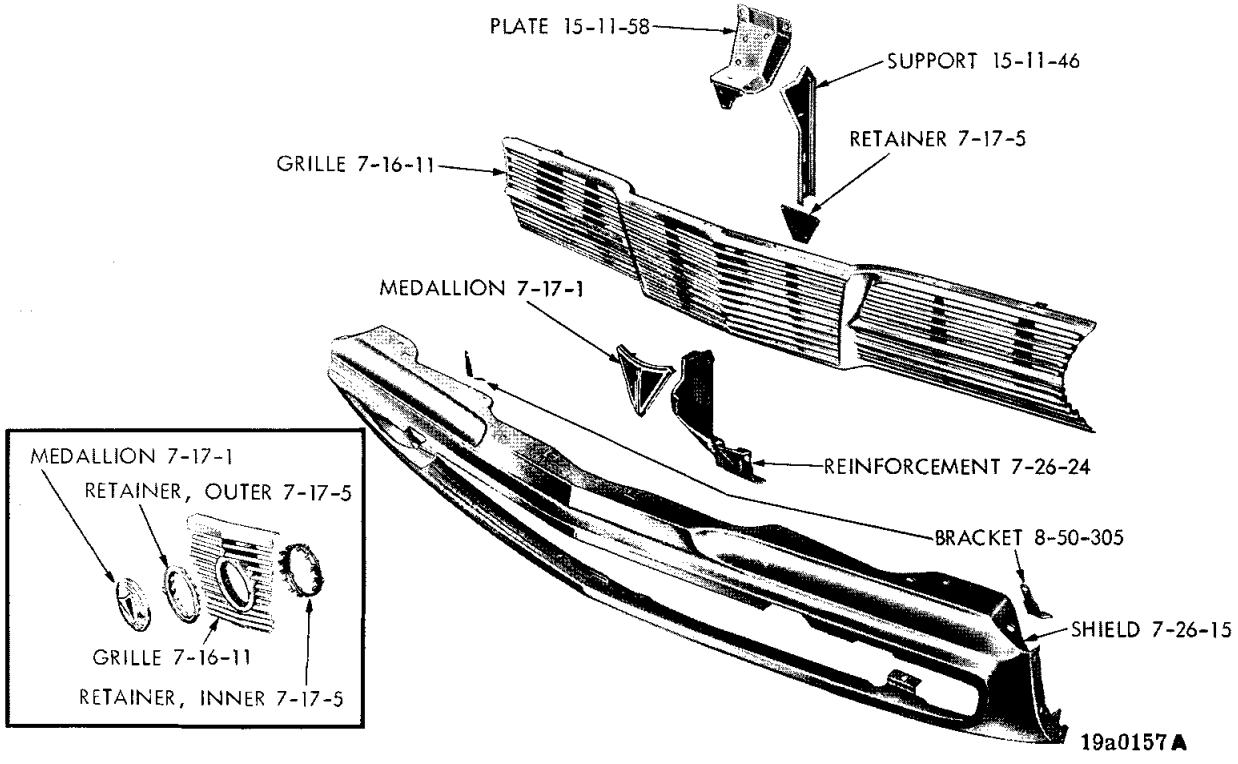

GRILLE - VALIANT

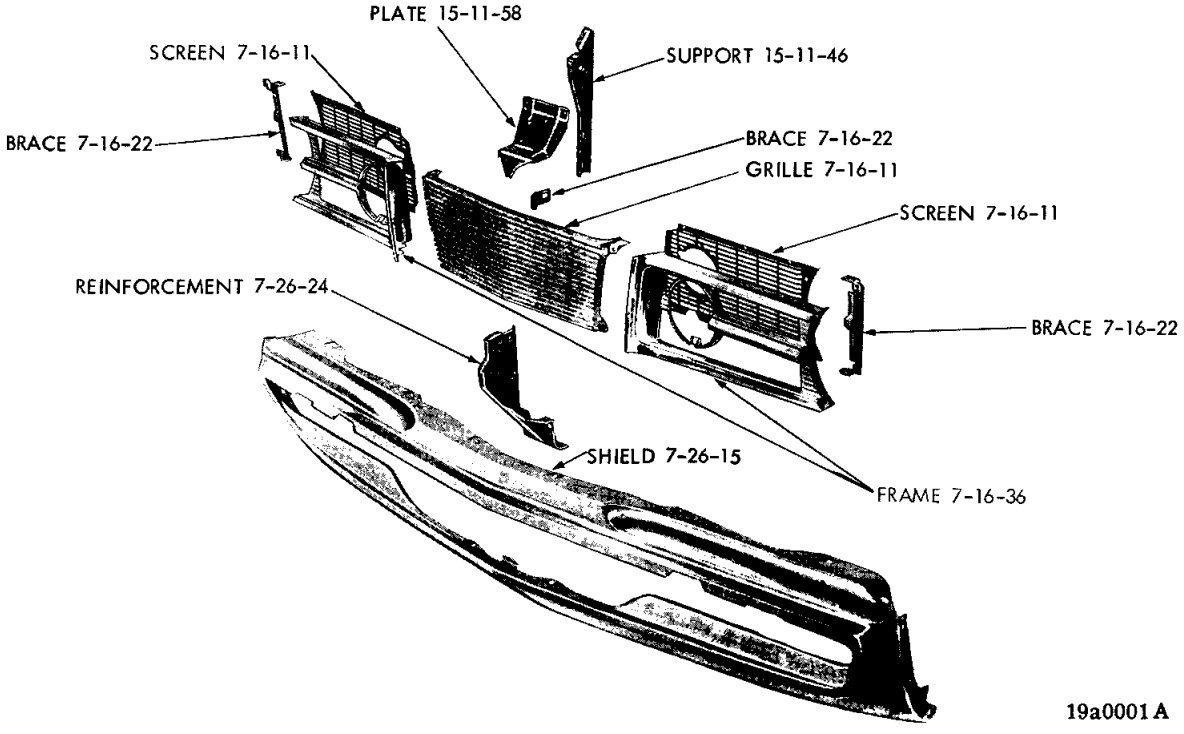

GRILLE - VALIANT, BARRACUDA

MyMopar.com

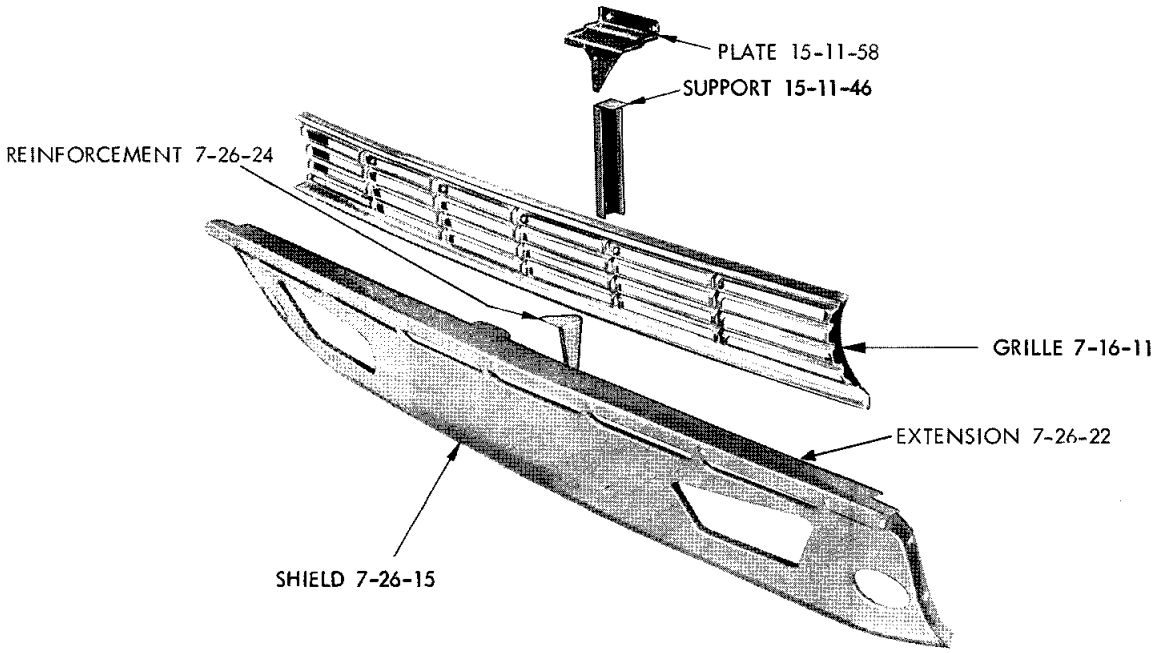

19a0065A

GRILLE - DART

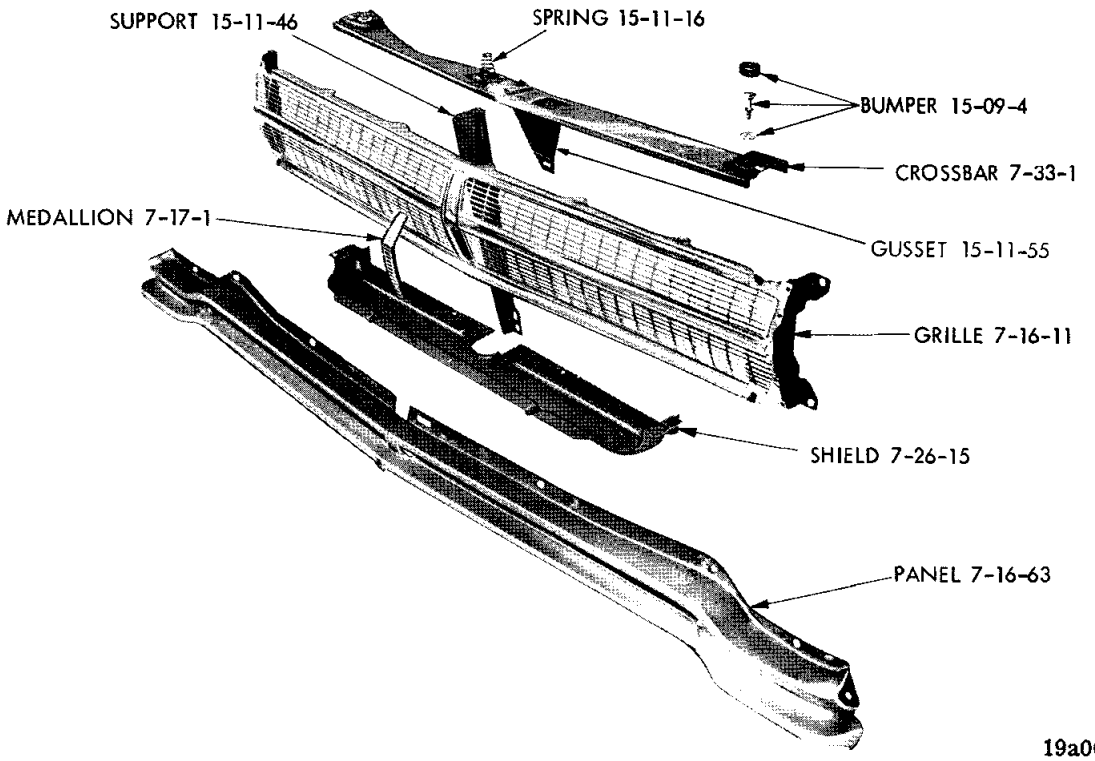

19a0064A

GRILLE - BELVEDERE

MyMopar.com

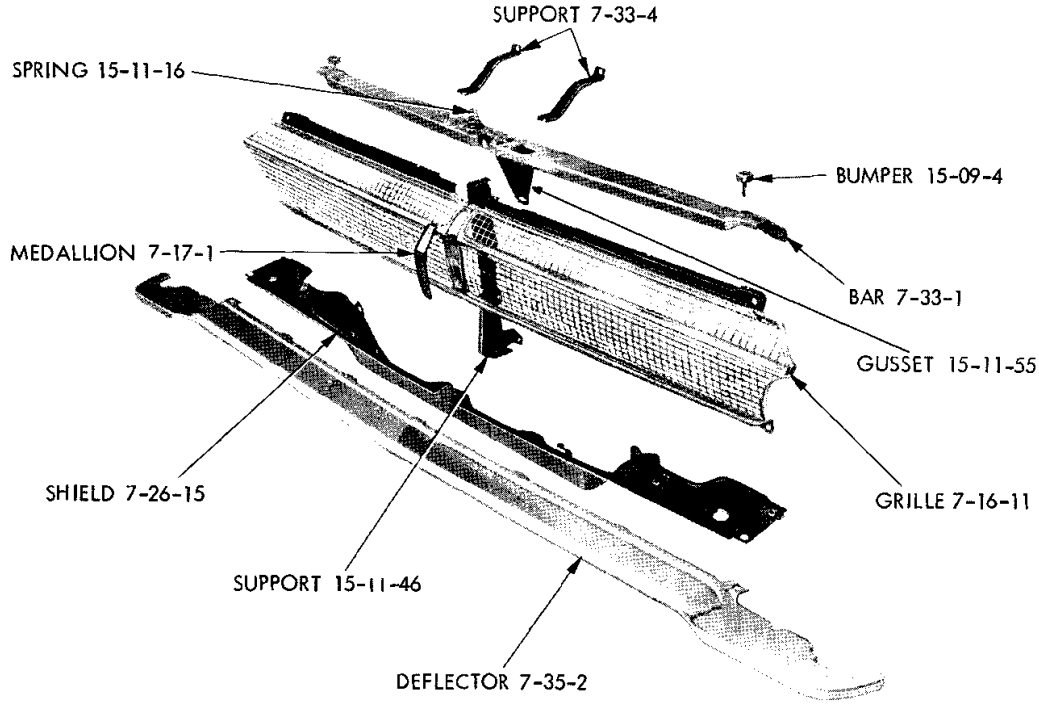

19a0066A

GRILLE - PLYMOUTH

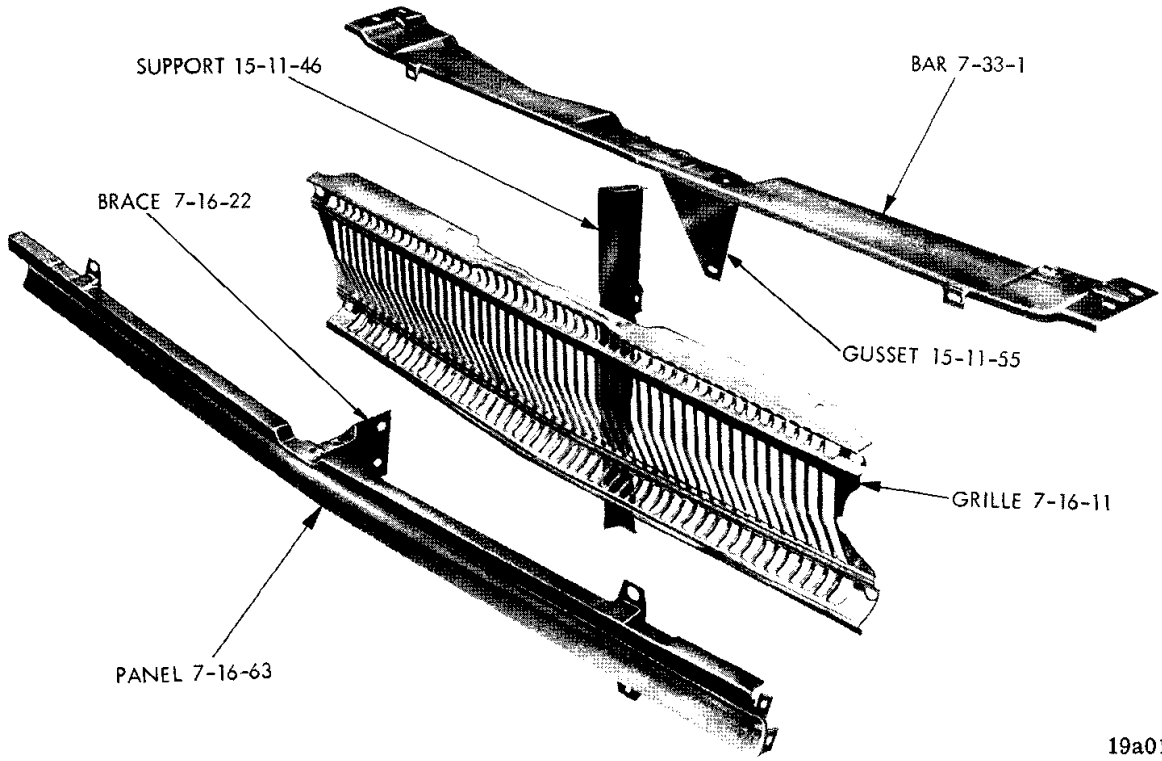

19a0108A

GRILLE - CORONET

MyMopar.com

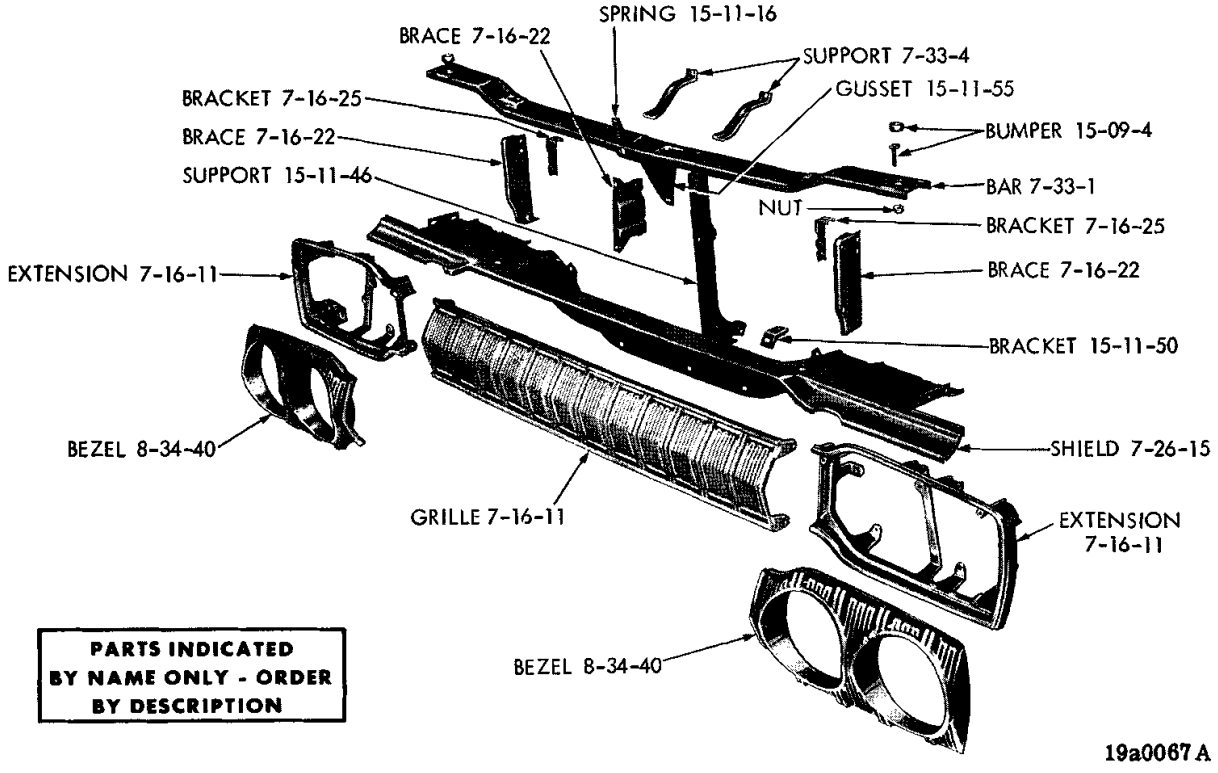

GRILLE - DODGE

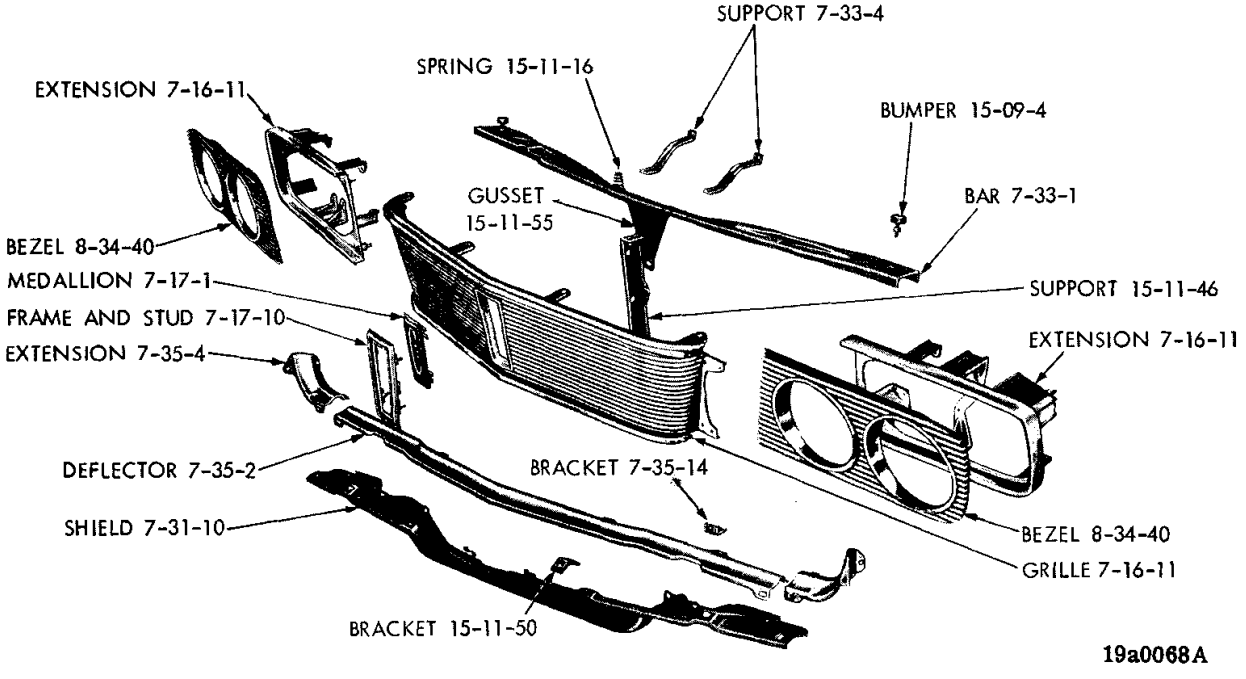

GRILLE - CHRYSLER (L)

MyMopar.com

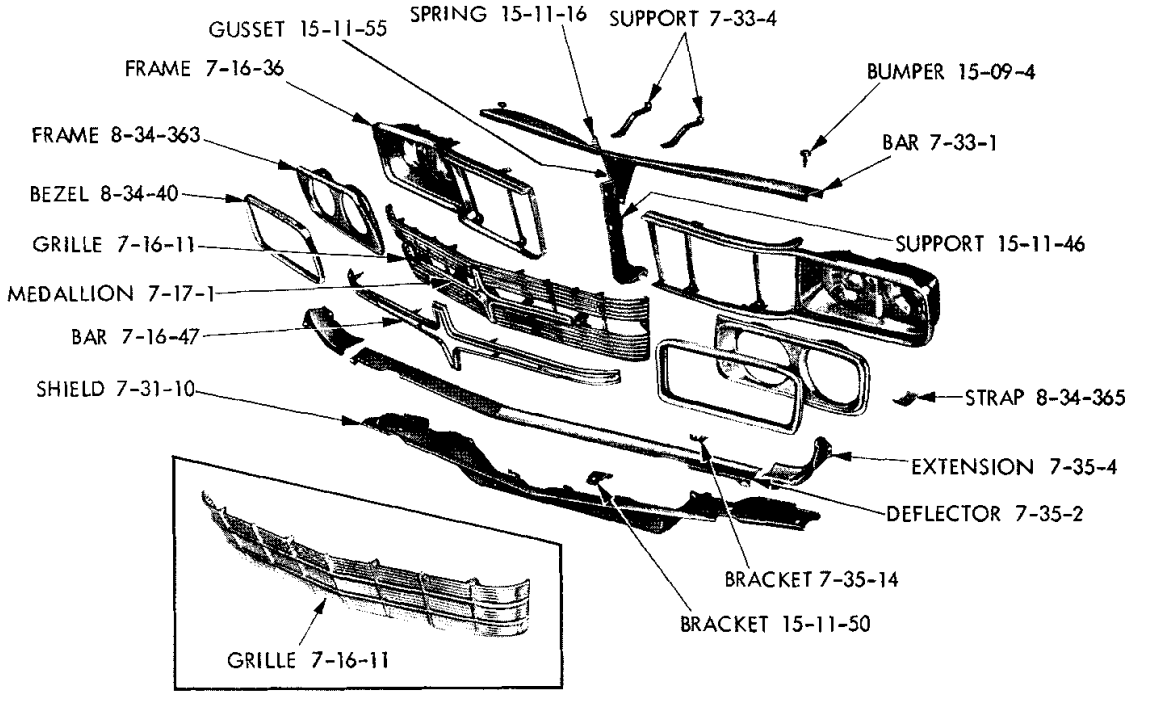

GRILLE - CHRYSLER (M) AND (H)

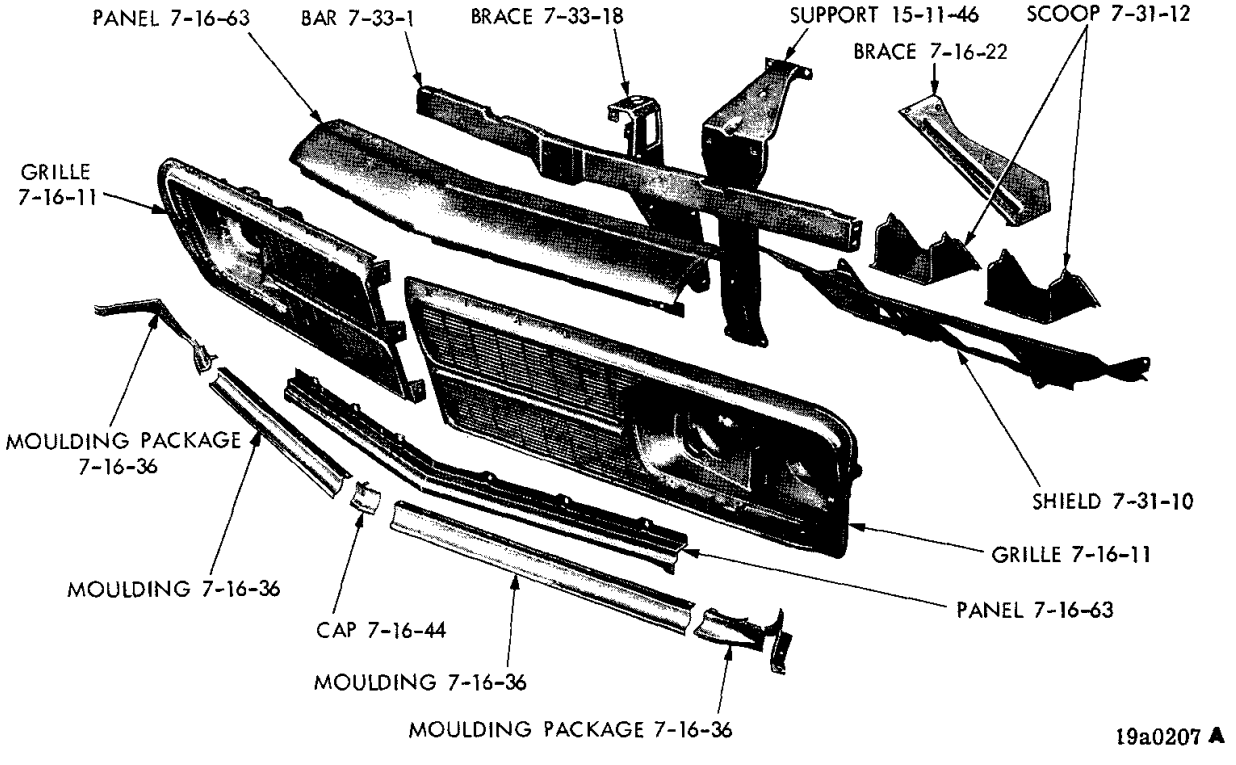

GRILLE - IMPERIAL

MyMopar.com

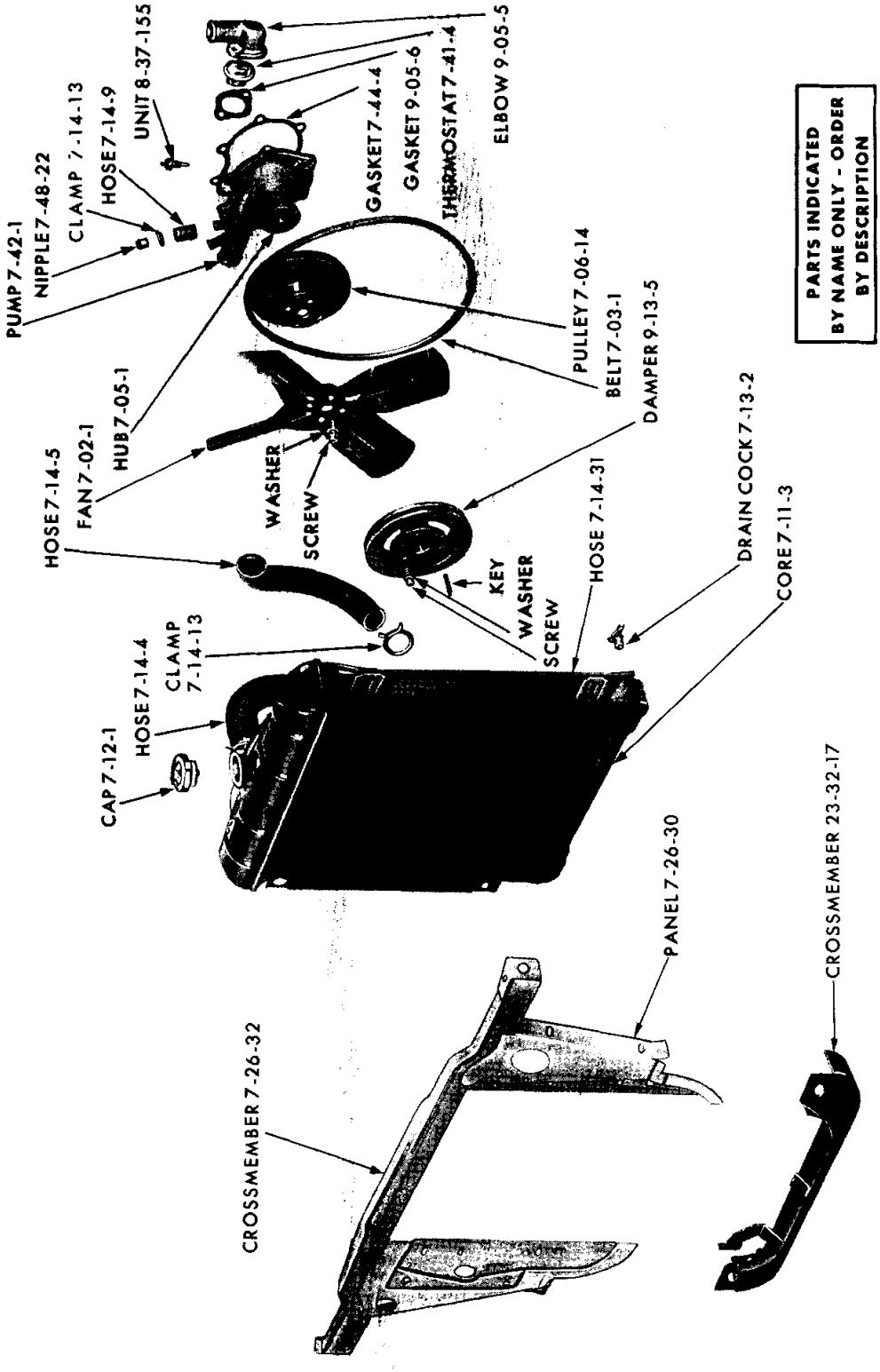

PARTS INDICATED BY NAME ONLY - ORDER BY DESCRIPTION

19x8844E

COOLING SYSTEM (6 CYLINDER) - VALIANT AND DART

MyMopar.com

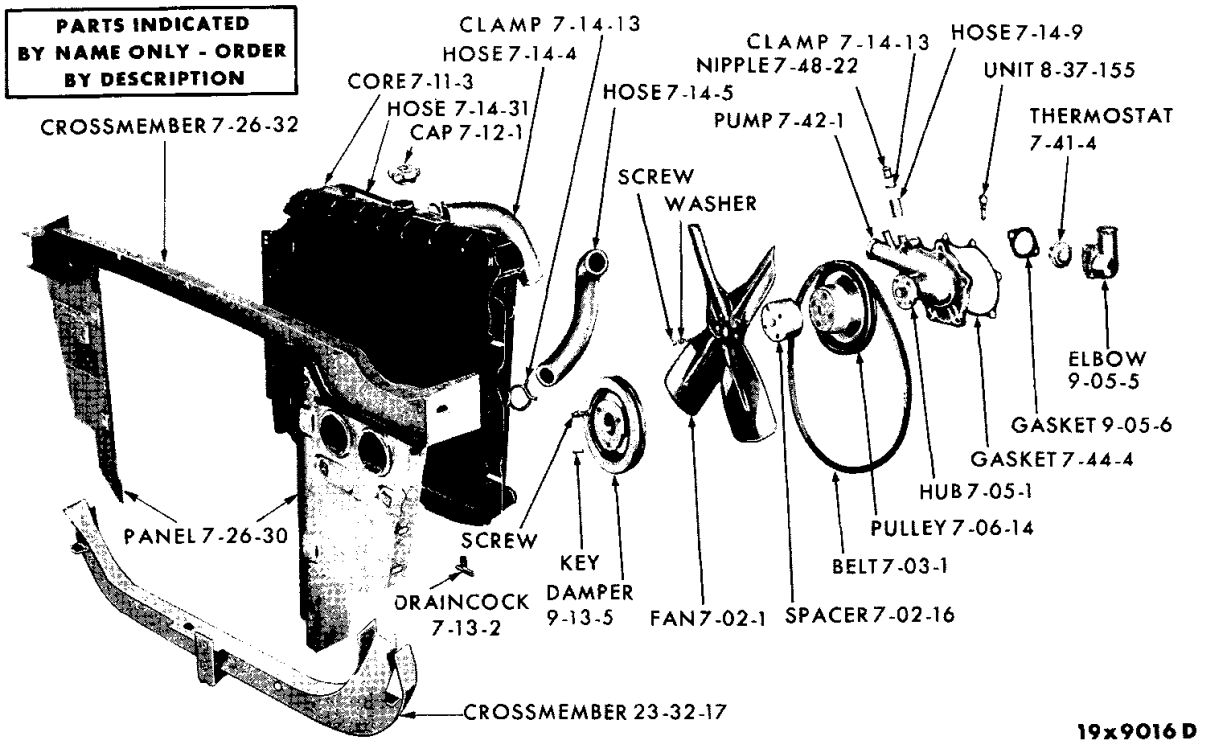

COOLING SYSTEM (6 CYLINDER) - BELVEDERE AND CORONET

NOTES

MyMopar.com

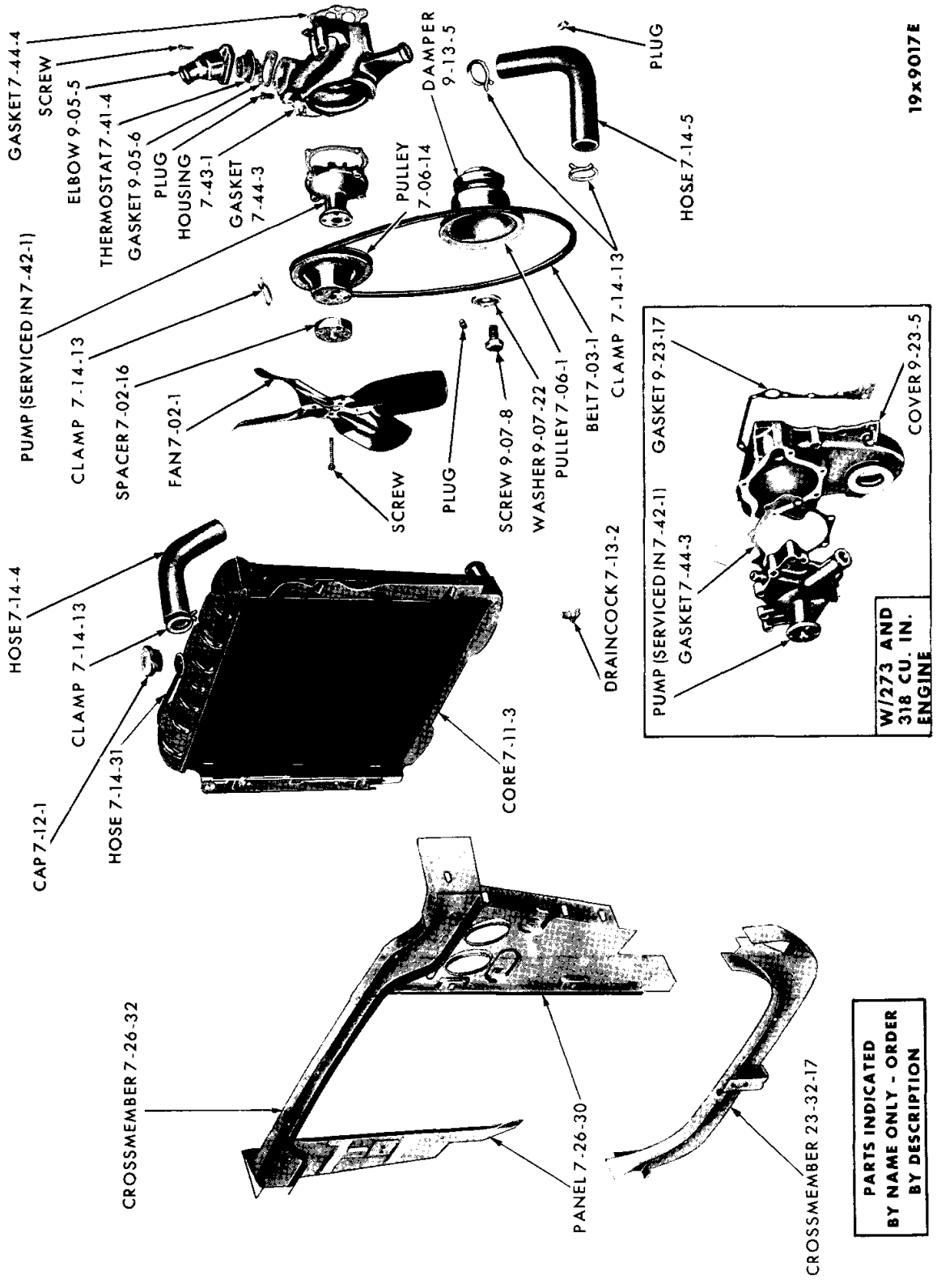

COOLING SYSTEM (V8 CYLINDER) - VALIANT, DART, BELVEDERE AND CORONET

MyMopar.com

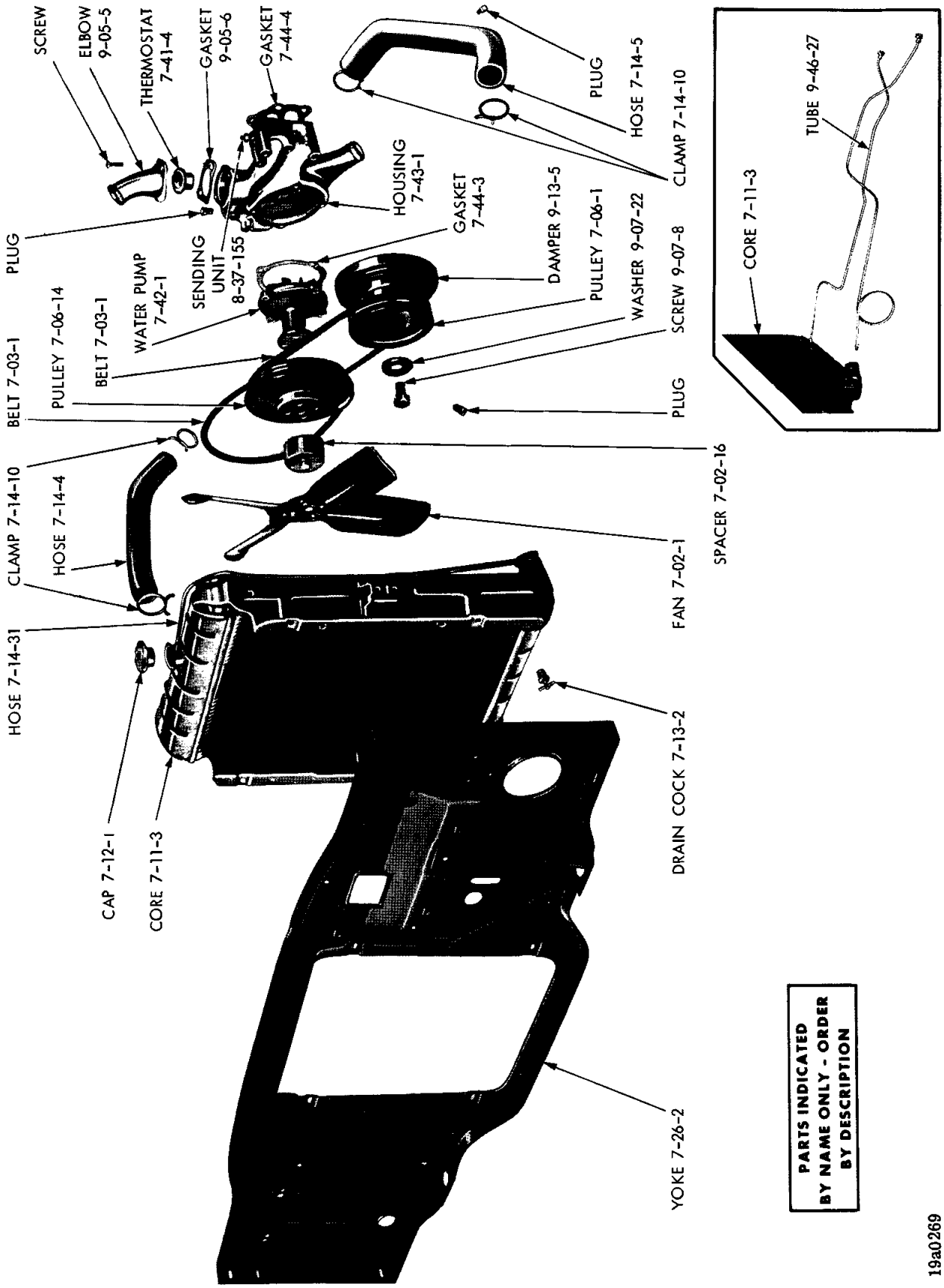

COOLING SYSTEM - PLYMOUTH P2 AND DODGE D2

MyMopar.com

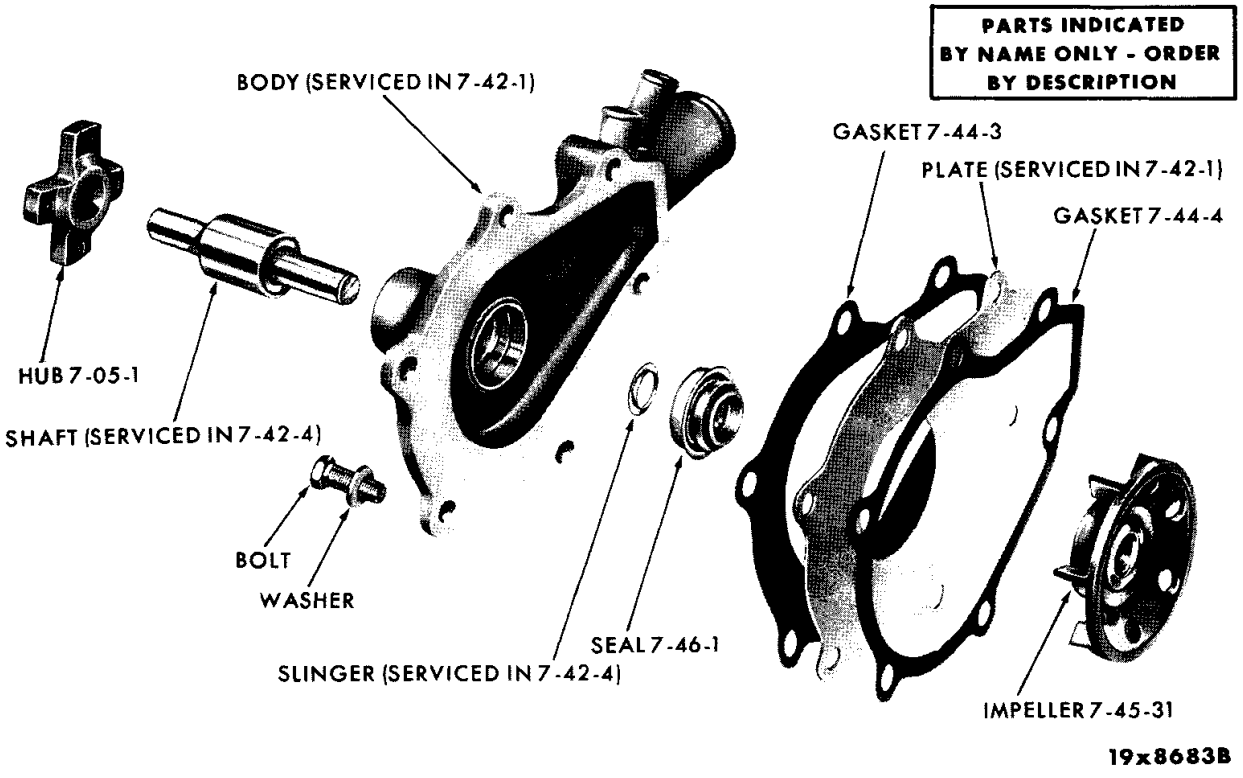

WATER PUMP - 6 CYLINDER

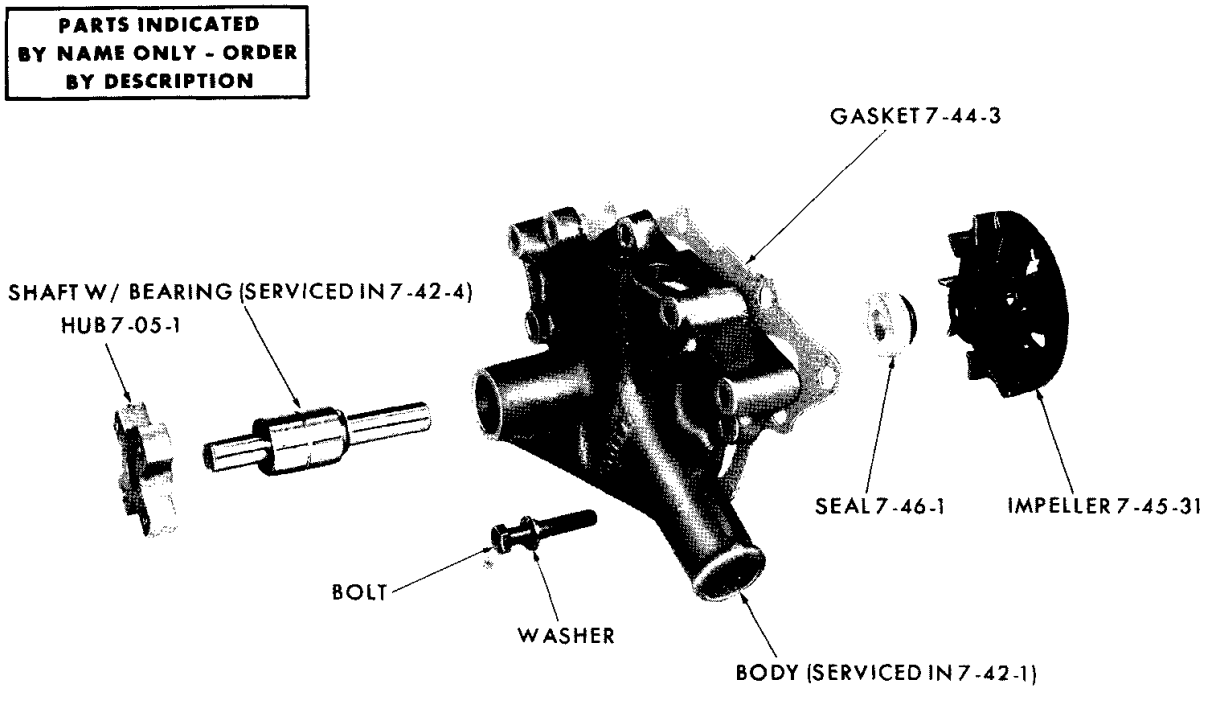

WATER PUMP (V8 CYLINDER) - WITH 273 AND 318 CU. IN. ENGINE

MyMopar.com

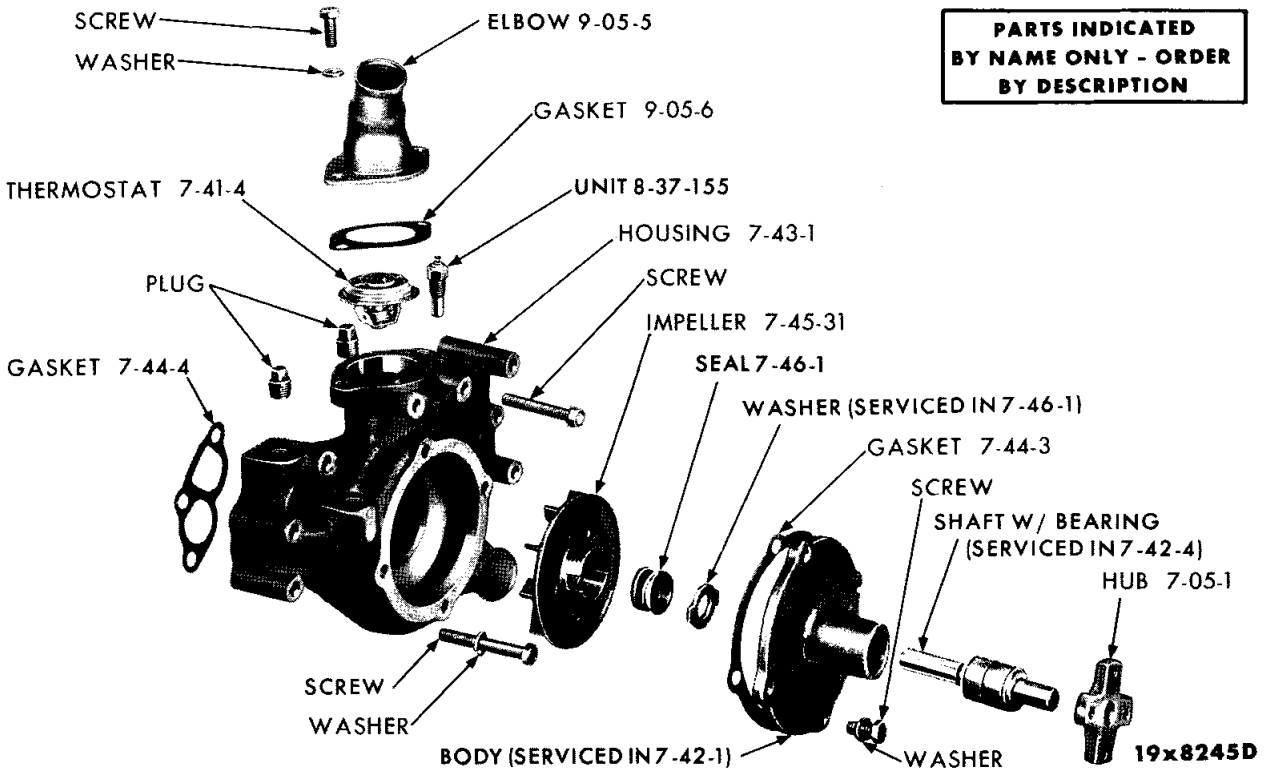

WATER PUMP (V8 CYLINDER) - WITH 361, 383, 413 AND 426 CU. IN. ENGINE

NOTES

MyMopar.com

Figure 1

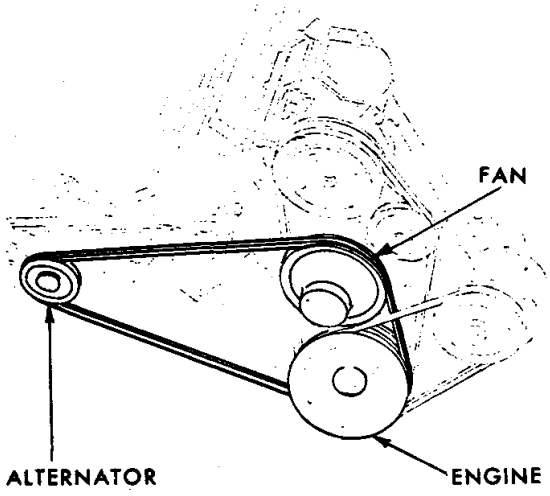

Figure 2

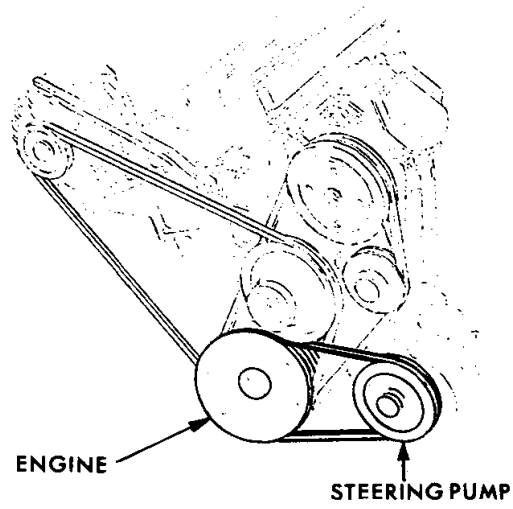

Figure 3

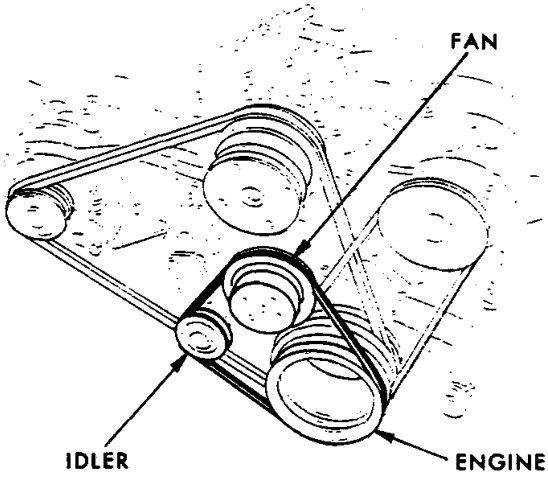

Figure 4

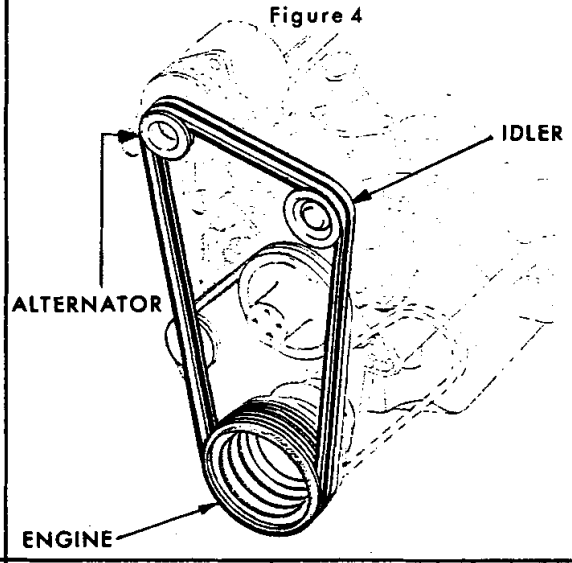

Figure 5

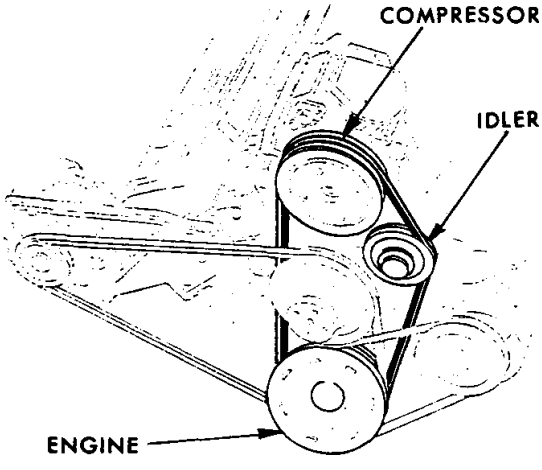

Figure 6

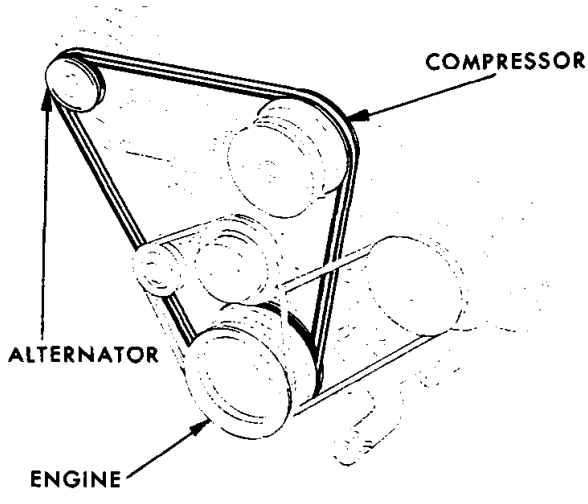

19x9214A

FAN BELT CHART

MyMopar.com

CODE	PART NAME AND DESCRIPTION	CYL	PER CAR	VALIANT / DART	PLYMOUTH BELVEDERE / DODGE CORONET	PLYMOUTH FURY / DODGE POLARA / CHRYSLER	IMPERIAL
7-03-0	**FAN AND RELATED DRIVE BELTS**						
7-03-1	BELT						
	ENGINE TO ALTERNATOR TO FAN (see Fig. 1)						
	w/170 cu. in. Engine, w/ 2 1/2" Alternator Pulley	6	1	2532 658			
	w/170 cu. in. Engine, w/ 2 3/4" Pulley	6	1	1673 649			
	w/225 cu. in. Engine, P1, w/ 2 3/4" Pulley	6	1	1821 138	1821 138	1821 138	
	w/225 cu. in. Engine, P1, w/ 2 1/2" Alternator Pulley	6	1	*2658 391	*2658 391	*2658 391	
	w/Leece-Neville Alternator, P1	6	1	2264 463	2264 463	2264 463	
	w/273 and 318 cu. in. Engine, P2, D	8	1	*2658 391	*2658 391	*2532 657	
	w/273 cu. in. Engine, w/4 Barrel Carburetor, w/A/Cond., use w/o Trailer Towing Package	8	1	2658 379			
	w/318 cu. in. Eng., w/o A/Cond., w/2 3/4" Pulley	8	1	---- ---	---- ---	*1744 046	
	w/361, 383, 413 cu. in. Eng., Field Installed	8	1	---- ---	*1533 532	*1533 532	*1533 532
	w/361, 383, 413 and 426 cu. in. Engine	8	1	---- ---	1737 925	2532 648	1533 121
	w/361, 383, 413 cu. in. Eng., w/o A/Cond., w/2 1/2" Pulley	8	1	---- ---	*2532 648	*2532 648	
	w/426 cu. in. Hemispherical Engine	8	1	---- ---	1614 009		
	ENGINE TO STEERING PUMP (see Fig. 2)						
	w/o A/Cond.	6	1	1327 471	1327 471		
	w/A/Cond., P1	6	1	*1859 297	*1859 297	*1859 297	
	w/ or w/o A/Cond., P1	6	1	---- ---	---- ---	1617 781	
	w/o A/Cond., w/Auto. Trans., Taxi	6	1	---- ---	1821 684		
	w/2495 057 Strg. Pump, w/ 4 5/8" Reservoir, w/273 and 318 cu. in. Engine, P2	8	1	1854 895	1854 895	1854 895	
	w/2196 082 Strg. Pump, w/ 5 1/8" Reservoir, w/318 cu. in. Engine, P2, D	8	1	---- ---	*2121 972	*2121 972	
	w/2495 057 Strg. Pump, w/4 5/8" Reservoir, w/361, 383, 413 and 426 cu. in. Engine, P2, D2	8	1	---- ---	2402 378	2402 378	
	w/2196 082 Strg. Pump, w/ 5 1/8" Reservoir, w/383, 413 and 426 cu. in. Engine	8	1	---- ---	---- ---	2129 277	2129 277
	ENGINE TO FAN (see Fig. 3)						
	w/A/Cond., w/273 and 318 cu. in. Engine, P2	8	1	1821 684	1821 684	1821 684	
	w/A/Cond., w/o Trailer Towing Package, w/361, 383 and 413 cu. in. Engine	8	1	---- ---	1733 893	1733 893	1733 893
	w/A/Cond., w/Trailer Towing Package, w/361, 383 and 413 cu. in. Engine	8	1	---- ---	1327 471	1327 471	
	w/Leece-Neville Alternator, w/273 and 318 cu. in. Engine, P2, D2	8	1	---- ---	*1821 684	*1821 684	
	w/Chrysler Alternator, w/o A/Cond., w/o Power Steering, w/Auto. Transmission, w/225 cu. in. Engine R1, W1	6	1	---- ---	1821 684		
	w/Leece-Neville Alternator, w/361, 383 and 413 cu. in. Engine, P2, D2, Single	8	1	---- ---	*1327 471	*1327 471	
	w/Leece Neville Alternator, w/383 and 413 cu. in. Engine, P2, D2 Police	8	1	---- ---	⊟2658 793	⊟2658 793	
	ENGINE TO ALTERNATOR (see Fig. 4)						
	w/Leece-Neville Alternator, w/318 cu. in. Engine, P2	8	1	---- ---	1673 650	1673 650	
	w/Leece-Neville Alternator, w/361 and 383 cu. in. Engine, P2, D2, Dual	8	1	---- ---	*2121 250	*2121 250	
	w/Leece-Neville Alternator, w/413 cu. in. Engine, D2	8	1	---- ---	---- ---	2120 673	

TYPE LETTERS Indicate: V - Valiant, L - Dart, R - Belvedere, W - Coronet, P - Plymouth, D - Dodge, C - Chrysler, Y - Imperial

★ Indicates use as required. Numerals in parentheses ( ) refer to notes. Printed in U.S.A.

⊟ Indicates parts not listed in any previous parts book. Prices and specifications subject to change without notice.

Indicates change or addition.

MyMopar.com

CODE	PART NAME AND DESCRIPTION	CYL	PER CAR	VALIANT / DART	PLYMOUTH BELVEDERE / DODGE CORONET	PLYMOUTH FURY / DODGE POLARA / CHRYSLER	IMPERIAL
7-03-0	**FAN AND RELATED DRIVE BELTS - Cont'd**						
7-03-1	BELT - Cont'd						
	w/Leece-Neville Alternator, w/383 cu. in. Engine, Dual Belt, P, D, Police	8	1	---- ---	⊟2658 790		
	w/Leece-Neville Alternator, w/413 cu. in. Engine, Dual Belt, D2 Police	8	1	---- ---	---- ---	⊟2658 792	
	w/273 cu. in. Engine	8	1	---- ---	*1737 926		
	ENGINE TO COMPRESSOR (see Fig. 5)						
	w/A/Cond., w/170 and 225 cu. in. Engine, V1, L1, R1, R2, W1, W2, P1		1	2268 222	2268 222	2268 222	
	w/170 and 225 cu. in. Engine	6	1	*2202 769			
	w/A/Cond., w/273 and 318 cu. in. Engine	8	1	2268 222	2268 222		
	w/361, 383, 440 cu. in. Eng., w/A/Cond., Model K	8	1	---- ---	*1825 903	*1825 903	*1825 903
	ENGINE TO ALTERNATOR TO COMPRESSOR (see Fig. 6)						
	w/A/Cond., w/273 cu. in. Engine	8	1	1945 343			
	w/A/Cond., w/Leece-Neville Alternator, w/361 cu. in. Engine, Dual	8	1	---- ---	*2658 356		
	w/A/Cond., w/Leece-Neville Alternator, w/383 cu. in. Engine, Dual P2, D	8	1	---- ---	*2658 356	*2658 356	
	w/A/Cond., w/Chrysler Alternator, w/361 and 383 cu. in. Engine, P2, D2, C1, C2	8	1	---- ---	*2658 354	*2658 354	
	w/A/Cond., w/413 cu. in. Engine, w/Chrysler Alternator, D2, C2, C3, Y1	8	1	---- ---	---- ---	*2658 354	*2658 354
	w/o A/Cond., w/413 cu. in. Engine, P2, D	8	1	---- ---	---- ---	2120 673	
	w/A/Cond., w/Leece-Neville Alternator, w/413 cu. in. Engine, C2, C3	8	1	---- ---	---- ---	2129 284	
	w/A/Cond., w/Leece-Neville Alternator, w/383 cu. in. Engine, D2	8	1	---- ---	---- ---	2129 284	
	w/A/Cond., w/413 cu. in. Engine, w/Leece-Neville Alternator, D2	8	1	---- ---	---- ---	*2658 358	
	w/A/Cond., w/273 and 318 cu. in. Engine, R2, W2, P2, D2, Dual	8	1	---- ---	*2658 352	*2658 352	

NOTES

TYPE LETTERS Indicate:	V - Valiant	R - Belvedere	P - Plymouth	C - Chrysler
	L - Dart	W - Coronet	D - Dodge	Y - Imperial

★Indicates use as required. Numerals in parentheses ( ) refer to notes. Printed in U.S.A.
⊟Indicates parts not listed in any previous parts book. Prices and specifications subject to change without notice.
March 1966 Supersedes May 1965. * Indicates change or addition.

MyMopar.com

CODE	PART NAME AND DESCRIPTION	CYL	PER CAR	VALIANT / DART	PLYMOUTH BELVEDERE / DODGE CORONET	PLYMOUTH FURY / DODGE POLARA / CHRYSLER	IMPERIAL
7-02-0	**FAN ASSEMBLY**						
7-02-1	FAN, w/o A/Cond.	6	1	*2121 971	*1947 907	*1947 907	
	w/Trailer Tow. Pkg. or Heavy Duty Fan	6	1	*2206 356	*2536 415	*2536 415	
	Except 426 cu. in. Eng.	8	1	⊟2658 984	*2265 034	*2265 034	*2265 034
	w/Trailer Tow. Pkg. or Heavy Duty Fan, except 426 cu. in. Engine	8	1	*2532 257	*2120 208	*2120 208	
	w/426 cu. in. Eng., except Hemi.	8	1	---- ---	*2121 013	*2585 376	
	w/426 cu. in. Hemi. Engine	8	1	---- ---	*2585 375		
	w/A/Cond., 6 Blade	6	1	*2206 356	*2265 034	*2265 034	
	w/Auto. Trans., w/o Power Steering	6	1	---- ---	*2536 415	*2536 415	
	w/225 cu. in. Engine, Field Installation, P1, 6 Blade	6	1	---- ---	*1735 941	*1735 941	
	w/273 and 318 cu. in. Engine, P, 7 Blade	8	1	*2463 657	*2120 208	*2120 208	
	w/273 cu. in. Engine, w/Trailer Tow. Pkg., 6 Blade	8	1	*2532 257			
	w/361, 383 and 413 cu. in. Engine, 7 Blade, Aluminum	8	1	---- ---	*2585 375	*2585 376	*2585 376
	w/361, 383 and 413 cu. in. Engine, w/Trailer Tow. Pkg.	8	1	---- ---	*2120 208	*2120 208	
	w/361, 383 and 413 cu. in. Eng., w/A/Cond., Model K	8	1	---- ---	*1985 513	*1985 513	
7-02-16	SPACER, Fan, w/o A/Cond., w/225 and 170 cu. in. Eng.	6	1	2265 037	1730 155	1825 956	
	w/A/Cond., w/170 and 225, P1	6	1	*2265 037	*1825 932	*1825 932	
	w/o Air Conditioning, w/Auto. Trans., Police and Taxi, P1	6	1	2265 037	---- ---	2265 037	
	w/o Air Conditioning, w/273 and 318 cu. in. Eng., P2, D	8	1	*2265 036	*2265 036	*2265 036	
	w/A/Cond., w/225, 273 and 318 cu. in. Eng., V2, R2, W2, P1, P2		1	*1825 956	*1825 956	*1825 956	
	w/273, 318, 383 and 413 cu. in. Engine, w/Field Installed A/Cond.	8	1	---- ---	*2003 059	*2003 059	*2003 059
	w/o A/Cond., w/361, 383 and 413 cu. in. Eng.	8	1	---- ---	1730 155	1730 155	1730 155
	w/o A/Cond., w/383 and 413 cu. in. Eng.	8	1	---- ---	---- ---	1674 746	
	w/A/Cond., w/Trailer Tow. Pkg., w/361, 383 and 413 cu. in. Eng.	8	1	---- ---	1730 155	2120 510	
7-03-0	**FAN AND RELATED DRIVE BELTS**						
	NOTE: See Illustrations in Front of Group 7.						
7-04-0	**FAN AND ALTERNATOR IDLER PULLEY**						
7-04-1	PULLEY, Fan Idler, 1 Groove	8	1	*2240 397	*2240 397	*2240 397	*2240 397
	Alternator Idler, w/Leece-Neville Alternator, P, D, 2 Groove	8	1	---- ---	*1859 770	*1859 770	
7-04-5	BRACKET, Fan Idler Pulley, w/o A/Cond., w/Leece-Neville Alternator, w/273 cu. in. Eng.	8	1	---- ---	2129 666		
	w/318 cu. in. Eng., P	8	1	---- ---	2468 494	2468 494	
	w/361, 383 and 413 cu. in. Eng.	8	1	---- ---	2129 667	2129 667	
	w/A/Cond., w/273 and 318 cu. in. Eng., P, D.	8	1	*2468 494	*2468 494	*2468 494	
	w/361, 383 and 413 cu. in. Eng.	8	1	---- ---	2129 667	2129 667	2129 667
	Alternator Idler Pulley, w/Leece-Neville Alternator, P, D	8	1	---- ---	2264 517	2264 517	
7-04-6	SCREW, Fan Idler Pulley Adjusting, w/318 cu. in. Eng., w/o A/Cond., w/Leece-Neville Alternator, P, D	8	1	---- ---	*2206 300	*2206 300	
	w/A/Cond., w/318 cu. in. Eng.	8	1	---- ---	---- ---	2206 300	

TYPE LETTERS Indicate: V - Valiant, L - Dart, R - Belvedere, W - Coronet, P - Plymouth, D - Dodge, C - Chrysler, Y - Imperial

★Indicates use as required. Numerals in parentheses ( ) refer to notes. Printed in U.S.A.

⊟Indicates parts not listed in any previous parts book. Prices and specifications subject to change without notice.

* Indicates change or addition. March 1966 Supersedes May 1965.

MyMopar.com

CODE	PART NAME AND DESCRIPTION	CYL	PER CAR	VALIANT / DART	PLYMOUTH BELVEDERE / DODGE CORONET	PLYMOUTH FURY / DODGE POLARA / CHRYSLER	IMPERIAL
7-04-0	**FAN AND ALTERNATOR IDLER PULLEY - Cont'd**						
7-04-8	REINFORCEMENT, Alternator Idler Pulley Bracket Support, w/Leece-Neville Alternator w/318 cu. in. Engine, P	8	1	---- ---	2406 647	2406 647	
7-04-9	SUPPORT, Alternator Idler Pulley Bracket, w/Leece-Neville Alternator w/318 cu. in. Engine, P	8	1	---- ---	2406 646	2406 646	
	w/361, 383 and 413 cu. in. Engine, P, D	8	1	---- ---	2406 646	2406 646	
7-04-10	SPACER, Fan Belt Idler Pulley Bracket, w/Leece-Neville Alternator, w/361, 383 and 413 cu. in. Engine, P, D	8	1	---- ---	2203 195	2203 195	
	w/A/Cond., w/o Trailer Tow. Pkg., w/361, 383 and 413 cu. in. Eng.	8	1	---- ---	2468 434	2468 434	2468 434
	w/A/Cond., w/Trailer Tow. Pkg., w/361, 383 and 413 cu. in. Eng.	8	1	---- ---	1851 608	1851 608	
	Alternator Idler Pulley Bracket, w/Leece-Neville Alternator, w/318 cu. in. Engine, P	8	1	---- ---	2202 380	2202 380	
7-04-13	BRACKET, Alternator Idler Pulley Bracket Spacer, w/Leece-Neville Alternator, w/318 cu. in. Engine, P	8	1	---- ---	1945 384	1945 384	
7-04-16	SPACER, Alternator Idler Pulley Bearing, w/Leece-Neville Alternator, P, D	8	1	---- ---	2120 520	2120 520	
7-04-17	SHIELD, Fan Belt Idler Pulley Bearing	8	1	---- ---	*2658 758	*2658 758	*2658 758
	SHIELD, Alternator Idler Pulley Bearing	8	1	---- ---	⊟2658 759	⊟2658 759	
7-04-20	NUT, Alternator Idler Pulley Bolt, P, D		1	---- ---	2409 824	2409 824	
7-05-0	**FAN PULLEY HUB**						
7-05-1	HUB		1	2129 265	2129 265	2129 265	2129 265
7-06-0	**FAN DRIVE AND DRIVE PULLEYS**						
7-06-1	PULLEY, Drive, w/Power Strg., P1	6	1	2205 518	2205 518	2205 518	
	w/Power Strg., Police and Taxi, w/Auto. Transmission	6	1	---- ---	2202 794		
	w/A/Cond., P1	6	1	2202 794	2202 794	2202 794	
	w/Leece-Neville Alternator, P1	6	1	2264 449	2264 449	2264 449	
	w/o Power Strg., w/273 and 318 cu. in. Engine, P2	8	1	1821 411	1821 411	1821 411	
	w/o Power Strg., w/361, 383, 413 and 426 cu. in. Eng., 1 Groove	8	1	---- ---	*1821 449	*1821 449	*1821 449
	w/o Air Conditioning, w/426 cu. in. Eng., w/Power Strg., w/273 and 318 cu. in. Engine, P2, D2, 2 Groove	8	1	*1855 152	*1855 152	*1855 152	
	w/o Power Strg., w/383 cu. in. Eng., P2, Police, 2 Groove	8	1	---- ---	---- ---	*1852 606	
	w/Power Strg., w/361, 383, 413 and 426 cu. in. Eng., 2 Groove	8	1	---- ---	*1826 053	*1826 053	*1826 053
	w/Leece-Neville Alternator, w/273 and 318 cu. in. Engine, P2	8	1	---- ---	1859 580	1859 580	
	w/Leece-Neville Alternator, w/361, 383 and 413 cu. in. Eng., P2, D2, 4 Groove	8	1	---- ---	*1859 252	*1859 252	
	w/A/Cond., w/Trailer Tow. Pkg., w/273 cu. in. Eng., 4 Groove	8	1	2532 248			

TYPE LETTERS Indicate: V - Valiant, L - Dart, R - Belvedere, W - Coronet, P - Plymouth, D - Dodge, C - Chrysler, Y - Imperial

★Indicates use as required. Numerals in parentheses ( ) refer to notes. Printed in U.S.A.
⊟Indicates parts not listed in any previous parts book. Prices and specifications subject to change without notice.
March 1966 Supersedes May 1965. * Indicates change or addition.

MyMopar.com

CODE	PART NAME AND DESCRIPTION	CYL	PER CAR	VALIANT / DART	PLYMOUTH BELVEDERE / DODGE CORONET	PLYMOUTH FURY / DODGE POLARA / CHRYSLER	IMPERIAL
7-06-0	**FAN DRIVE AND DRIVE PULLEYS - Cont'd**						
7-06-1	PULLEY - Cont'd						
	w/Air Conditioning, w/273 and 318 cu. in. Eng., 3 Groove, P2	8	1	*2402 730	*2402 730	*2402 730	
	w/A/Cond., w/273 cu. in. Eng., 4 Groove	8	1	*2463 334			
	w/Model K, A/Cond., Field Installed, Single Groove	8	1	---- ---	⊟2011 445	⊟2011 445	⊟2011 445
	w/A/Cond., w/Leece-Neville Alternator, w/273 and 318 cu. in. Eng., 4 Groove	8	1	---- ---	*2532 248		
	w/A/Cond., w/318 cu. in. Eng., P2, 4 Groove	8	1	---- ---	---- ---	*2532 248	
	w/A/Cond., w/361 and 383 cu. in. Eng., P2, D2, C1, C2, 4 Groove	8	1	---- ---	*2465 326	*2465 326	
	w/A/Cond., w/413 cu. in. Eng., D2, C2, C3, 4 Groove	8	1	---- ---	---- ---	*2465 325	*2465 757
	w/A/Cond., w/Trailer Tow. Pkg., w/361 and 383 cu. in. Eng., P2, D2, C1, C2	8	1	---- ---	*1859 252	*1859 252	
	w/A/Cond., w/Trailer Tow. Pkg., w/413 cu. in. Eng., D2, C2, C3, 4 Groove	8	1	---- ---	---- ---	*2465 725	
7-06-3	HUB, Fan Drive Pulley, w/Leece-Neville Alternator, w/318 cu. in. Engine, P	8	1	---- ---	1733 805	1733 805	
7-06-14	PULLEY, Fan Drive, w/o A/Cond., P1	6	1	2202 666	2202 666	2202 666	
	w/A/Cond., P1	6	1	2406 039	2406 039	2406 039	
	w/Leece-Neville Alternator, P1	6	1	2264 450	2264 450	2264 450	
	w/o A/Cond., w/273 and 318 cu. in. Eng., P2	8	1	1852 582	1852 582	1852 582	
	w/A/Cond., w/273 and 318 cu. in. Eng., P2, D2, 1 Groove	8	1	*2463 332	*1852 582	*1852 582	*1852 582
	w/A/Cond., w/Leece-Neville Alternator, w/273 and 318 cu. in. Eng.	8	1	---- ---	2463 332		
	w/o A/Cond., w/361, 383, 413 and 426 cu. in. Eng., except Hemi., 1 Groove	8	1	---- ---	*1821 452	*1821 452	*1821 452
	w/A/Cond., w/361, 383 and 413 cu. in. Eng.	8	1	---- ---	2465 348	2465 348	2465 348
	w/o A/Cond., w/426 cu. in. Hemi. Eng.	8	1	---- ---	2402 296		
	w/Leece-Neville Alternator, w/361, 383 and 413 cu. in. Engine, P2, D2, C1, C2, C3, 1 Groove	8	1	---- ---	*1851 248	*1851 248	
7-07-0	**FAN FLUID DRIVE UNIT or THERMAL DRIVE UNIT**						
7-07-1	DRIVE, Fan Fluid, w/o A/Cond., w/426 cu. in. Eng., P2, D2, R w/426 cu. in. Eng., Hemi.	8	1	---- ---	*2268 903	*2402 848	
	w/A/Cond., w/273 and 318 cu. in. Eng., P2	8	1	2536 675	2536 675	2536 675	
	w/A/Cond., w/361, 383 and 413 cu. in. Eng.	8	1	---- ---	2536 677	2536 677	2536 677
7-08-0	**RADIATOR CORE FAN SHROUD**						
7-08-2	SHROUD, Upper	6	1	2524 501	2578 597	2524 932	
	Lower	6	1	2524 508	2578 599	2449 954	
	Upper	8	1	2524 306	2417 423	2524 936	1686 412
	Lower	8	1	2524 313	2417 427	2449 958	1686 414
7-08-7	BUMPER, Shroud to Core		4	---- ---	---- ---	2578 574	1624 506
7-08-9	FILLER, Shroud to Core	6	2	---- ---	2099 963		
7-08-13	BRACKET, Shroud to Core	6	4	2099 555			
		8	4	2524 494	2099 555		
	Right, R1, W1		1	---- ---	2099 944	2524 176	1686 451
	Left, R1, W1		1	---- ---	2099 945	2524 177	1686 453

TYPE LETTERS Indicate: V - Valiant, L - Dart, R - Belvedere, W - Coronet, P - Plymouth, D - Dodge, C - Chrysler, Y - Imperial

★Indicates use as required. Numerals in parentheses ( ) refer to notes. Printed in U.S.A.
⊟Indicates parts not listed in any previous parts book. Prices and specifications subject to change without notice.
* Indicates change or addition.

MyMopar.com

CODE	PART NAME AND DESCRIPTION	CYL	PER CAR	VALIANT / DART	PLYMOUTH BELVEDERE / DODGE CORONET	PLYMOUTH FURY / DODGE POLARA / CHRYSLER	IMPERIAL
7-08-0	**RADIATOR CORE FAN SHROUD - Cont'd**						
7-08-15	STUD, Upper to Lower Shroud	8	2	---- ---	1641 903		
	SCREW, Bracket to Core		4	---- ---	*6023 092	*6023 092	
7-08-20	SEAL, Lower (22 inches)	8	★	---- ---	1242 974		

CODE	PART NAME AND DESCRIPTION	CYL	PER CAR	STANDARD	HIGH ALTITUDE	AIR CONDITIONING
7-11-0	**RADIATOR CORE**					
7-11-3	CORE, V1, L1, w/Manual Trans.	6	1	2524 952	2524 957	2524 957
	V1, L1, w/Auto. Trans.	6	1	2524 956	2524 957	2524 957
	R1, W1, w/Manual Trans.	6	1	2524 963	2524 965	2524 965
	R1, W1, w/Auto. Trans.	6	1	2524 964	2524 965	2524 965
	P1	6	1	2524 974	2524 975	2524 975
	V2, L2	8	1	2524 961	2524 962	2524 962
	R2, W2, w/273 and 318 cu. in. Engine, w/Manual Trans.	8	1	2524 966	2524 969	2524 969
	R2, W2, w/273 and 318 cu. in Engine, w/Auto. Trans.	8	1	2524 968	2524 969	2524 969
	R2, W2, w/361, 383 and 426 cu. in. Engine, w/Manual Trans.	8	1	2524 970	2524 972	2524 972
	R2, W2, w/361, 383 and 426 cu. in. Engine w/Auto. Trans.	8	1	2524 972	2524 972	2524 972
	P2, w/318 cu. in. Engine, w/Manual Trans.	8	1	2524 976	2524 978	2524 978
	P2, w/318 cu. in. Engine, w/Auto. Trans.	8	1	2524 978	2524 992	2524 992
	P2, D2, C1, C2, w/383 cu. in. Engine, w/Manual Trans.	8	1	2524 982	2524 984	2524 984
	P2, D2, C1, C2, w/383 cu. in. Engine, w/Auto. Trans., w/ 2 Bbl. Carburetor	8	1	2524 982	2524 984	2524 984
	P2, D2, C1, C2, w/383 cu. in. Engine, w/Auto. Trans., w/ 4 Bbl. Carburetor	8	1	2524 983	2524 984	2524 984
	P2, D2, C2, w/413 and 426 cu. in. Engine, w/Manual Trans.	8	1	2524 986	2524 989	2524 989
	P2, D2, C2, w/413 and 426 cu. in. Engine, w/Auto. Trans.	8	1	2524 989	2524 989	2524 989
	C3, w/413 cu. in. Engine	8	1	2524 986	2524 989	2524 989
	C3, w/413 cu. in. Engine, w/Special Cam	8	1	2524 989	2524 989	2524 989
	Y1, w/413 cu. in. Engine	8	1	2524 990	2524 991	2524 991

CODE	PART NAME AND DESCRIPTION	CYL	PER CAR	VALIANT / DART	PLYMOUTH BELVEDERE / DODGE CORONET	PLYMOUTH FURY / DODGE POLARA / CHRYSLER	IMPERIAL
7-12-0	**RADIATOR FILLER CAP**						
7-12-1	CAP, 16 Pound Pressure		1	1686 107	1686 107	1686 107	1686 107
7-13-0	**RADIATOR DRAIN COCK**						
7-13-2	DRAIN COCK, Radiator		1	1686 198	1686 198	1686 198	1686 198
7-14-0	**RADIATOR HOSE**						
7-14-4	HOSE, Inlet, Upper, w/170 cu. in. Engine	6	1	2268 911			
	w/225 cu. in. Engine	6	1	2268 912			
	w/o A/Cond., w/Trailer Tow. Pkg., Formed Hose, P1	6	1	---- ---	2536 517	2536 518	
	w/o A/Cond.	6	1	---- ---	1881 804	2463 665	

TYPE LETTERS Indicate: V - Valiant, L - Dart, R - Belvedere, W - Coronet, P - Plymouth, D - Dodge, C - Chrysler, Y - Imperial

★Indicates use as required. Numerals in parentheses ( ) refer to notes. Printed in U.S.A.

Indicates parts not listed in any previous parts book. Prices and specifications subject to change without notice.

March 1966 Supersedes May 1965. • Indicates change or addition.

MyMopar.com

CODE	PART NAME AND DESCRIPTION	CYL	PER CAR	VALIANT / DART	PLYMOUTH BELVEDERE / DODGE CORONET	PLYMOUTH FURY / DODGE POLARA / CHRYSLER	IMPERIAL
7-14-0	**RADIATOR HOSE - Cont'd**						
7-14-4	HOSE - Cont'd						
	w/A/Cond., Flexible Hose	6	1	---- ---	1881 805	2463 666	
	w/o A/Cond., w/Trailer Pkg.	6	1	---- ---	1881 805		
	w/Auto. Trans., Police and Taxi	6	1	---- ---	2406 713	2468 336	
	w/o A/Cond.	8	1	2465 801			
	w/A/Cond.	8	1	2465 802			
	w/o A/Cond., w/273 and 318 cu. in. Eng., P2	8	1	---- ---	1881 806	1881 806	
	w/A/Cond., w/273 cu. in. Eng.	8	1	*2084 044	2084 044		
	w/A/Cond., w/318 cu. in. Eng., P2	8	1	---- ---	2465 898	2465 898	
	w/o A/Cond., w/361, 383 and 426 cu. in. Eng., Molded	8	1	---- ---	*2402 720		
	w/A/Cond., w/361 and 383 cu. in. Eng.	8	1	---- ---	1881 806		
	w/o A/Cond., w/383, 413 and 426 cu. in. Eng.	8	1	---- ---	---- ---	1881 812	1881 812
	w/A/Cond., w/383 and 413 cu. in. Eng.	8	1	---- ---	---- ---	⊟2465 771	⊟2465 771
	w/o A/Cond., w/383, 413 and 426 cu. in. Eng., w/Heavy Duty Radiator	8	1	---- ---	---- ---	1881 806	
	w/Leece-Neville Alternator, w/361, 383 and 413 cu. in. Engine, P2, D2	8	1	---- ---	1881 806	2468 302	
7-14-5	HOSE, Outlet, Lower	6	1	2268 651	2268 598	2463 667	
	w/225 cu. in. Engine, w/A727 Auto. Trans.	6	1	---- ---	2406 714	2468 337	
	w/273 and 318 cu. in. Engine, P2	8	1	2465 803	1881 805	1881 806	
	w/361, 383, 413 and 426 cu. in. Engine	8	1	---- ---	2196 934	1881 810	1881 809
	w/Air Cond., w/273, 361, 381, 413 and 426 cu. in. Eng.	8	1	---- ---	*1881 806	*1881 806	*1881 806
7-14-9	HOSE, Water Pump By-Pass 5/8" I.D., 50 foot roll	6	★	1315 466	1315 466	1315 466	
	w/273 cu. in. Engine	8	1	2465 085	2465 085		
	w/318 cu. in. Engine, P2, D2	8	1	---- ---	1730 366	1730 366	
7-14-13	CLAMP, Hose, Worm Gear Type 1 1/4" to 1 15/16"		★	2448 762	2448 762	2448 762	2448 762
	1 1/2" to 2 1/4"		★	2448 763	2448 763	2448 763	2448 763
	2 1/8" to 2 7/8"		★	2448 764	2448 764	2448 764	2448 764
7-14-31	HOSE, Radiator Overflow 9/32" I.D. (sold by the inch)		★	1904 950	1904 950	1904 950	1904 950
7-16-0	**RADIATOR GRILLE**						
7-16-11	GRILLE, Radiator, V, except signet and Barracuda		1	2445 218			
	V, Signet		1	2524 911			
	V, Barracuda		1	2524 076			
	L, R, P		1	2445 219	2445 220	2445 221	
	W, D2		1	---- ---	2445 222	2445 246	
	C1	8	1	---- ---	---- ---	2445 224	
	C2	8	1	---- ---	---- ---	2445 225	
	C3	8	1	---- ---	---- ---	2445 226	
	Right		1	---- ---	---- ---	---- ---	2524 530
	Left		1	---- ---	---- ---	---- ---	2524 531
	SCREEN, Radiator Grille, Right, Barracuda		1	2524 074			
	Left, Barracuda		1	2524 075			
	EXTENSION, Radiator Grille, Right, D2	8	1	---- ---	---- ---	2524 064	
	Left, D2	8	1	---- ---	---- ---	2524 065	
	Right, C1	8	1	---- ---	---- ---	2524 082	
	Left, C1	8	1	---- ---	---- ---	2524 083	

TYPE LETTERS Indicate: V - Valiant, L - Dart, R - Belvedere, W - Coronet, P - Plymouth, D - Dodge, C - Chrysler, Y - Imperial

★Indicates use as required. Numerals in parentheses ( ) refer to notes. Printed in U.S.A.
⊟Indicates parts not listed in any previous parts book. Prices and specifications subject to change without notice.
* Indicates change or addition. March 1966 Supersedes May 1965.

MyMopar.com

CODE	PART NAME AND DESCRIPTION	CYL	PER CAR	VALIANT / DART	PLYMOUTH BELVEDERE / DODGE CORONET	PLYMOUTH FURY / DODGE POLARA / CHRYSLER	IMPERIAL
7-16-0	**RADIATOR GRILLE - Cont'd**						
7-16-22	BRACE, Grille to Lock Support V, Barracuda, R, D		1	*2524 466	*2524 146	*2445 859	
	W		1	---- ---	2524 043		
	W, Brace Assy.		1	---- ---	2524 043		
	Grille Frame to Air Shield, Right, V, Barracuda		1	2524 464			
	Left, V, Barracuda		1	2524 465			
	Grille Outer, Right, D2	8	1	---- ---	---- ---	2524 088	
	Left, D2	8	1	---- ---	---- ---	2524 089	
	Upper to Lower Grille Panel		1	---- ---	---- ---	---- ---	2445 768
7-16-23	STRAP, Reinforcement Upper	8	2	---- ---	---- ---	---- ---	2579 445
	Lower, Right	8	1	---- ---	---- ---	---- ---	2579 446
	Lower, Left	8	1	---- ---	---- ---	---- ---	2579 447
7-16-25	BRACKET, Grille Outer Brace Cross Bar, D2	8	2	---- ---	---- ---	2524 198	
7-16-36	RADIATOR GRILLE FRAME AND MOULDINGS						
	NOTE: See Exterior Moulding Illustrations in Front of Group 23 Body.						
7-16-44	RADIATOR GRILLE PANEL LOWER MOULDING CAP						
	NOTE: See Exterior Moulding Illustrations in Front of Group 23 Body.						
7-16-47	BAR, Grille Horizontal, C2 except 300 L	8	1	---- ---	---- ---	2524 266	
	C2-300 L	8	1	---- ---	---- ---	2578 703	
7-16-54	WASHER-CUP, Rad. Grille to Radiator Panel Extension		4	---- ---	---- ---	---- ---	* 600 073
7-16-63	PANEL, Radiator Grille, R		1	---- ---	2576 142		
	W		1	---- ---	2445 542		
	Upper		1	---- ---	---- ---	---- ---	2445 766
	Lower		1	---- ---	---- ---	---- ---	2445 480
7-16-82	BUMPER, Radiator Grille, L		7	2578 820			
7-16-118	DOUBLER, Radiator Grille Opening Side Panel Extension Ballast Block, Right, Cv. Cp.		1	---- ---	---- ---	---- ---	2449 992
	Left, Cv. Cp.		1	---- ---	---- ---	---- ---	2449 993
7-17-0	**RADIATOR GRILLE MEDALLION OR ORNAMENT**						
	NOTE: See Exterior Moulding Illustrations in Front of Group 23 Body.						
7-17-5	RETAINER, Grille Medallion V, except Signet.		1	2449 717			
	Inner, V, Signet		1	2524 913			
	Outer, V, Signet		1	2524 914			
7-17-10	FRAME, w/STUD, Grille Medallion C1	8	1	---- ---	---- ---	2578 768	
7-26-0	**RADIATOR YOKE**						
7-26-2	YOKE, Radiator		1	---- ---	---- ---	2493 625	
	Y1 except Cv. Cp.		1	---- ---	---- ---	---- ---	2417 460
	Y1 Cv. Cp.		1	---- ---	---- ---	---- ---	2524 050
7-26-9	SEAL, to Hood		1	---- ---	2578 554		
	To Radiator Core, Upper, P, D	8	1	---- ---	---- ---	*2579 753	
	Lower, P	8	1	---- ---	---- ---	2579 754	

TYPE LETTERS Indicate: V - Valiant, L - Dart, R - Belvedere, W - Coronet, P - Plymouth, D - Dodge, C - Chrysler, Y - Imperial

★Indicates use as required. Numerals in parentheses ( ) refer to notes. Printed in U.S.A.

⊟Indicates parts not listed in any previous parts book. Prices and specifications subject to change without notice.

March 1966 Supersedes May 1965. • Indicates change or addition.

MyMopar.com

CODE	PART NAME AND DESCRIPTION	CYL	PER CAR	VALIANT / DART	PLYMOUTH BELVEDERE / DODGE CORONET	PLYMOUTH FURY / DODGE POLARA / CHRYSLER	IMPERIAL
7-26-0	**RADIATOR YOKE - Cont'd**						
7-26-15	SHIELD, Radiator Air, V, except Barracuda		1	2525 867			
	V, Barracuda		1	2525 872			
	L		1	2445 265			
	R, W		1	---- ---	2445 784		
	P		1	---- ---	---- ---	2445 830	
	D2	8	1	---- ---	---- ---	2445 832	
7-26-18	SHIM, Yoke to Frame		★	---- ---	---- ---	1902 763	
7-26-22	EXTENSION, Radiator Air Shield Flange, L		1	2449 435			
7-26-24	REINFORCEMENT, Air Shield, V		1	2445 705			
	L, D		1	*2449 434			
7-26-28	BRACKET, Radiator Yoke to Frame Mounting, Y1 Cv. Cp.		2	---- ---	---- ---	---- ---	2467 658
7-26-30	PANEL, Radiator Yoke Side, Right		1	2524 446	2099 334		
	Left		1	2524 447	2099 335		
7-26-32	CROSSMEMBER, Radiator Yoke Side Panel Upper		1	2524 129	2099 339		
	NOTE: For Lower Crossmember see Part Type Code 23-32-17.						
7-26-37	BRACKET, Upper Crossmember to Side Shield, Right		1	---- ---	2099 598		
	Left		1	---- ---	2099 599		
7-31-0	**RADIATOR DUST SHIELD**						
7-31-10	SHIELD, Dust, C, Y1	8	1	---- ---	---- ---	2445 300	2417 077
7-31-12	SCOOP, Dust Shield Air	8	2	---- ---	---- ---	---- ---	2445 021
7-33-0	**RADIATOR CROSS BAR**						
7-33-1	BAR, Radiator Cross, R, P		1	---- ---	2445 482	2578 741	
	W, D2		1	---- ---	2524 329	2578 751	
	C, Y1	8	1	---- ---	---- ---	2578 750	2417 412
7-33-4	SUPPORT, Cross Bar Yoke		2	---- ---	---- ---	2445 425	
7-33-18	BRACKET and NUT, Cross Bar, P		2	---- ---	---- ---	*2524 199	
	BRACE, Cross Bar to Hood Lock Support		1	---- ---	---- ---	---- ---	2524 301
7-33-22	PLATE, Cross Bar Bumper, Right, L		1	2578 850			
	Left, L		1	2578 851			
7-35-0	**RADIATOR STONE DEFLECTOR**						
7-35-2	DEFLECTOR, P		1	---- ---	---- ---	2445 304	
	C	8	1	---- ---	---- ---	2445 750	
7-35-4	EXTENSION, Radiator Stone Deflector, Right, C	8	1	---- ---	---- ---	2445 436	
	Left, C	8	1	---- ---	---- ---	2445 437	
7-35-14	BRACKET, Stone Deflector to Grille Frame, Inner, C	8	2	---- ---	---- ---	2524 067	
	Outer, C	8	2	---- ---	---- ---	2524 068	

TYPE LETTERS Indicate: V - Valiant, L - Dart, R - Belvedere, W - Coronet, P - Plymouth, D - Dodge, C - Chrysler, Y - Imperial

★Indicates use as required. Numerals in parentheses ( ) refer to notes. Printed in U.S.A.

⊟Indicates parts not listed in any previous parts book. Prices and specifications subject to change without notice.

* Indicates change or addition. March 1966 Supersedes May 1965.

MyMopar.com

CODE	PART NAME AND DESCRIPTION	CYL	PER CAR	VALIANT / DART	PLYMOUTH BELVEDERE / DODGE CORONET	PLYMOUTH FURY / DODGE POLARA / CHRYSLER	IMPERIAL
7-41 0	**THERMOSTAT**						
7-41-4	THERMOSTAT, 160° Fahrenheit, P1	6	1	2465 170	2465 170	2465 170	
	180° Fahrenheit, P1	6	1	2465 169	2465 169	2465 169	
	180° Fahrenheit	8	1	2128 994	2128 994	2128 994	2128 994
7-42-0	**WATER PUMP**						
7-42-1	WATER PUMP PACKAGE, P1	6	1	2196 910	2196 910	2196 910	
	w/o A/Cond., w/273 and 318 cu. in. Engine, P2	8	1	2448 315	2448 315	2448 315	
	w/A/Cond., w/273 and 318 cu. in. Engine, P2, D2	8	1	*2585 385	*2448 315	*2448 315	
	w/o A/Cond., w/361, 383, 413 and 426 cu. in. Eng., except Hemi. Eng.	8	1	---- ---	2448 326	2448 326	2448 326
	w/A/Cond., w/361, 383 and 413 cu. in. Eng.	8	1	---- ---	*2585 384	*2585 384	*2585 384
	w/o A/Cond., w/426 cu. in. Hemi. Eng.	8	1	---- ---	*2585 384		
7-42-4	REPAIR PACKAGE, Water Pump for 2196 910 Pump, P1	6	1	2298 907	2298 907	2298 907	
	For 2448 315 Pump, P2	8	1	2421 376	2421 376	2421 376	
	For 2525 098 Pump, P2, D2	8	1	2525 099	---- ---	2421 376	
	For 2448 326 Pump	8	1	---- ---	2448 327	2448 327	2448 327
	For 2448 328 Pump	8	1	---- ---	2448 329	2448 329	2448 329
7-43-0	**WATER PUMP HOUSING**						
7-43-1	HOUSING, w/o A/Cond., w/361, 383, 413 and 426 cu. in. Eng., except Hemi. Eng.	8	1	---- ---	2525 498	2525 498	2525 498
	426 cu. in. Engine, Hemispherical	8	1	---- ---	2536 725		
	w/A/Cond., w/361, 383 and 413 cu. in. Eng.	8	1	---- ---	2585 314	2585 314	2585 314
	w/o A/Cond., w/426 cu. in. Hemi. Eng.	8	1	---- ---	2585 314		
7-43-8	CAP, Water Pump Body Heater Hole	6	1	2128 425	2128 425	2128 425	
7-44-0	**WATER PUMP GASKET**						
7-44-3	GASKET, Body, P1	6	1	1947 521	1947 521	1947 521	
	w/273 and 318 cu. in. Eng., P2, D	8	1	*2129 013	*2129 013	*2129 013	
	w/361, 383, 413 and 426 cu. in. Engine	8	1	---- ---	1737 705	1737 705	1737 705
7-44-4	GASKET, to Intermediate Plate, P1	6	1	1947 523	1947 523	1947 523	
	To Cylinder Block, w/361, 383, 413 and 426 cu. in. Engine	8	2	---- ---	1737 761	1737 761	1737 761
7-45-0	**WATER PUMP IMPELLER**						
7-45-31	IMPELLER, Water Pump, P1	6	1	2205 549	2205 549	2205 549	
	w/o A/Cond., w/273 and 318 cu. in. Eng., P2, D2	8	1	*2402 795	*2402 795	*2402 795	
	w/A/Cond., w/273 and 318 cu, in, Eng., P2	8	1	2463 643	2402 795	2402 795	
	w/o A/Cond., w/361, 383, 413 and 426 cu. in. Eng., except Hemi. Eng.	8	1	---- ---	2402 909	2402 909	2402 909
	w/A/Cond., w/361, 383, and 413 cu. in. Eng.	8	1	---- ---	2402 923	2402 923	2402 923
	w/o A/Cond., w/426 cu. in. Hemi. Eng.	8	1	---- ---	2402 923		
7-46-0	**WATER PUMP SEAL**						
7-46-1	SEAL		1	2120 955	2120 955	2120 955	2120 955
7-48-0	**WATER PUMP ELBOW OR NIPPLE**						
7-48-22	NIPPLE, By-Pass, P1	6	1	1947 643	1947 643	1947 643	
	w/273 and 318 cu. in. Eng., P2, D	8	2	*1618 668	*1618 668	*1618 668	

TYPE LETTERS Indicate: V - Valiant, L - Dart, R - Belvedere, W - Coronet, P - Plymouth, D - Dodge, C - Chrysler, Y - Imperial

★Indicates use as required. Numerals in parentheses ( ) refer to notes. Printed in U.S.A.

⊟Indicates parts not listed in any previous parts book. Prices and specifications subject to change without notice.

March 1966 Supersedes May 1965. * Indicates change or addition.

MyMopar.com

GROUP 8 - ELECTRICAL

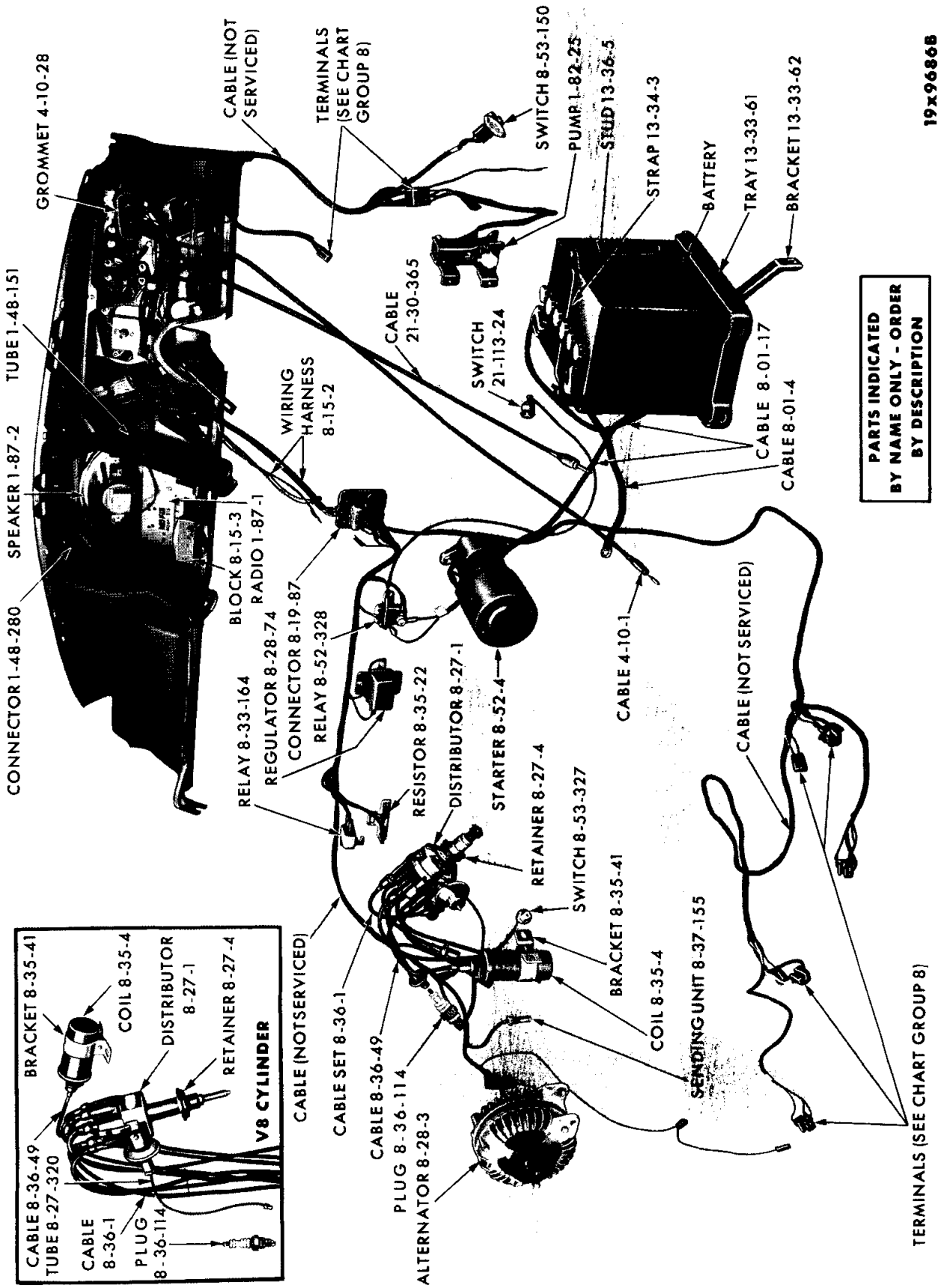

MyMopar.com

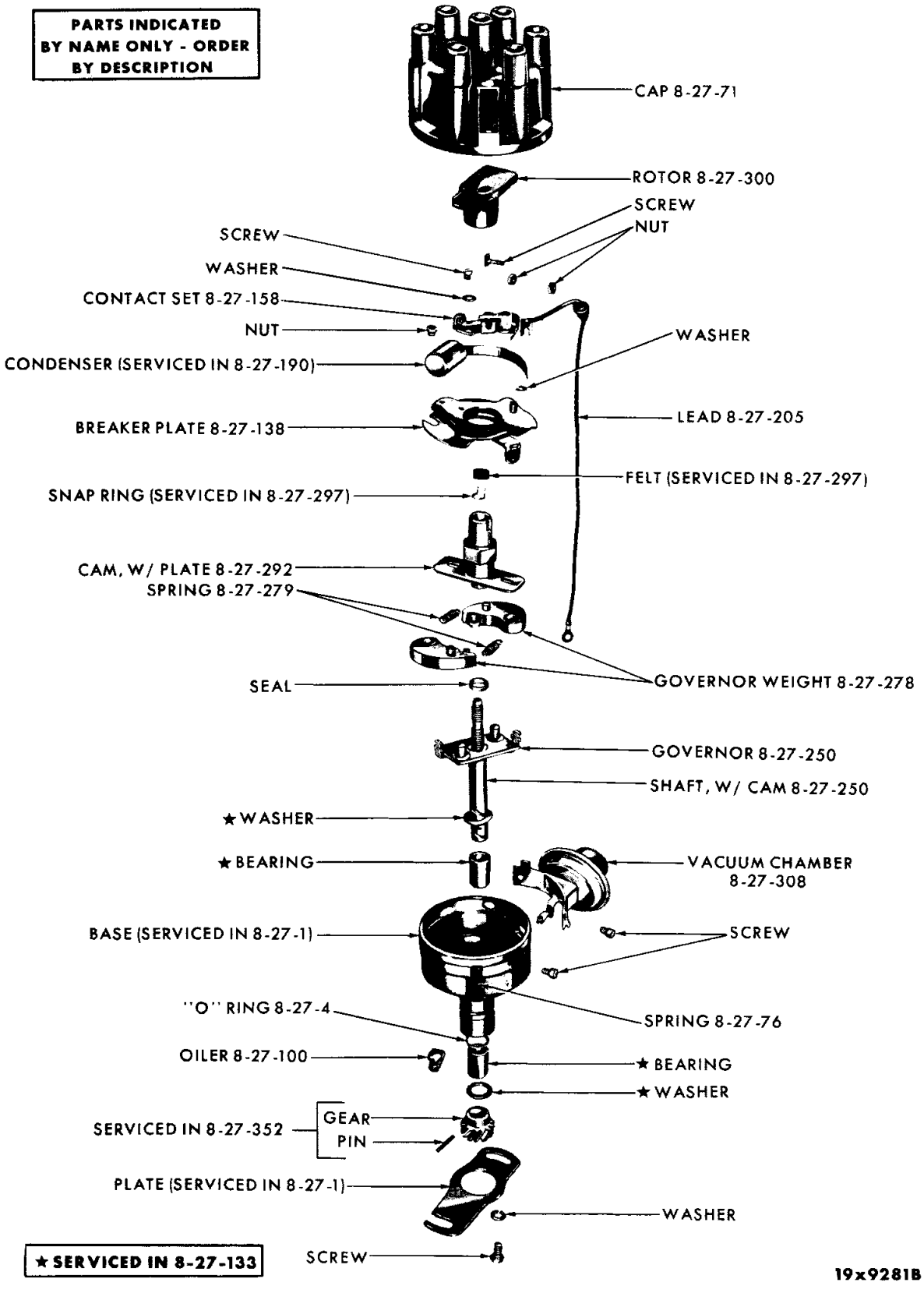

DISTRIBUTOR ASSEMBLY - 6 CYLINDER

MyMopar.com

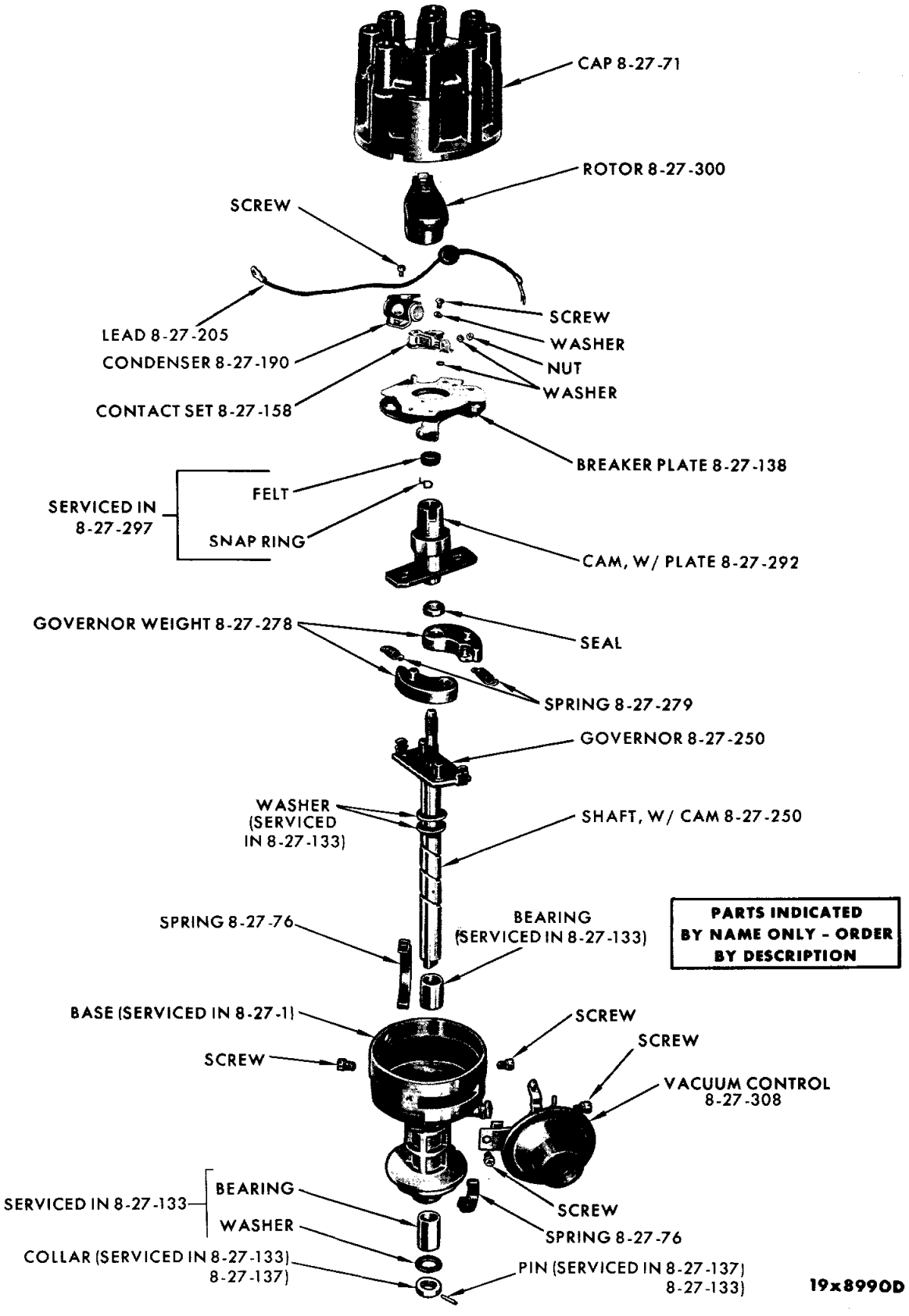

DISTRIBUTOR ASSEMBLY - V8 CYLINDER

MyMopar.com

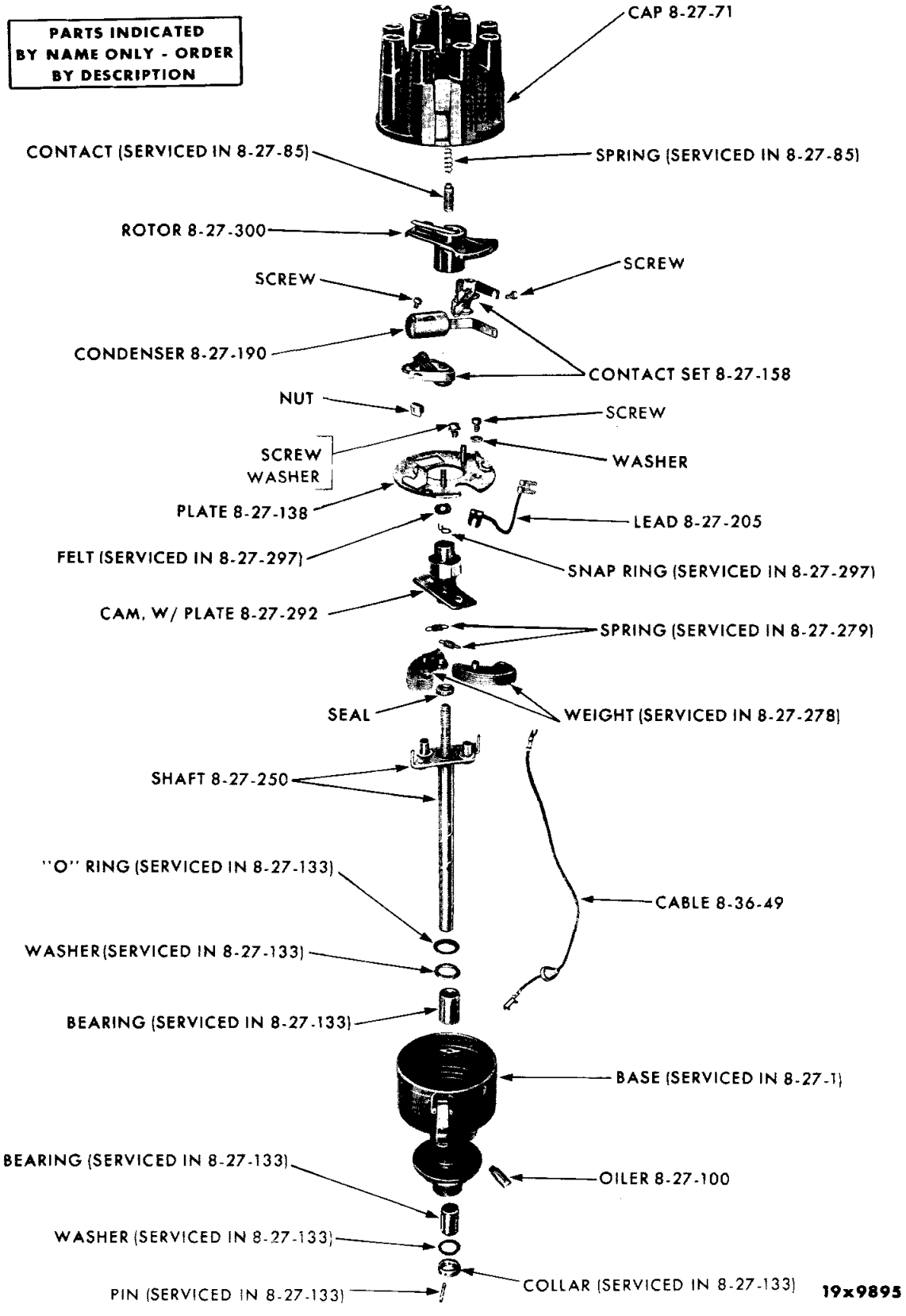

DISTRIBUTOR ASSEMBLY (V8 CYLINDER) - BELVEDERE, PLYMOUTH, CORONET AND DODGE

MyMopar.com

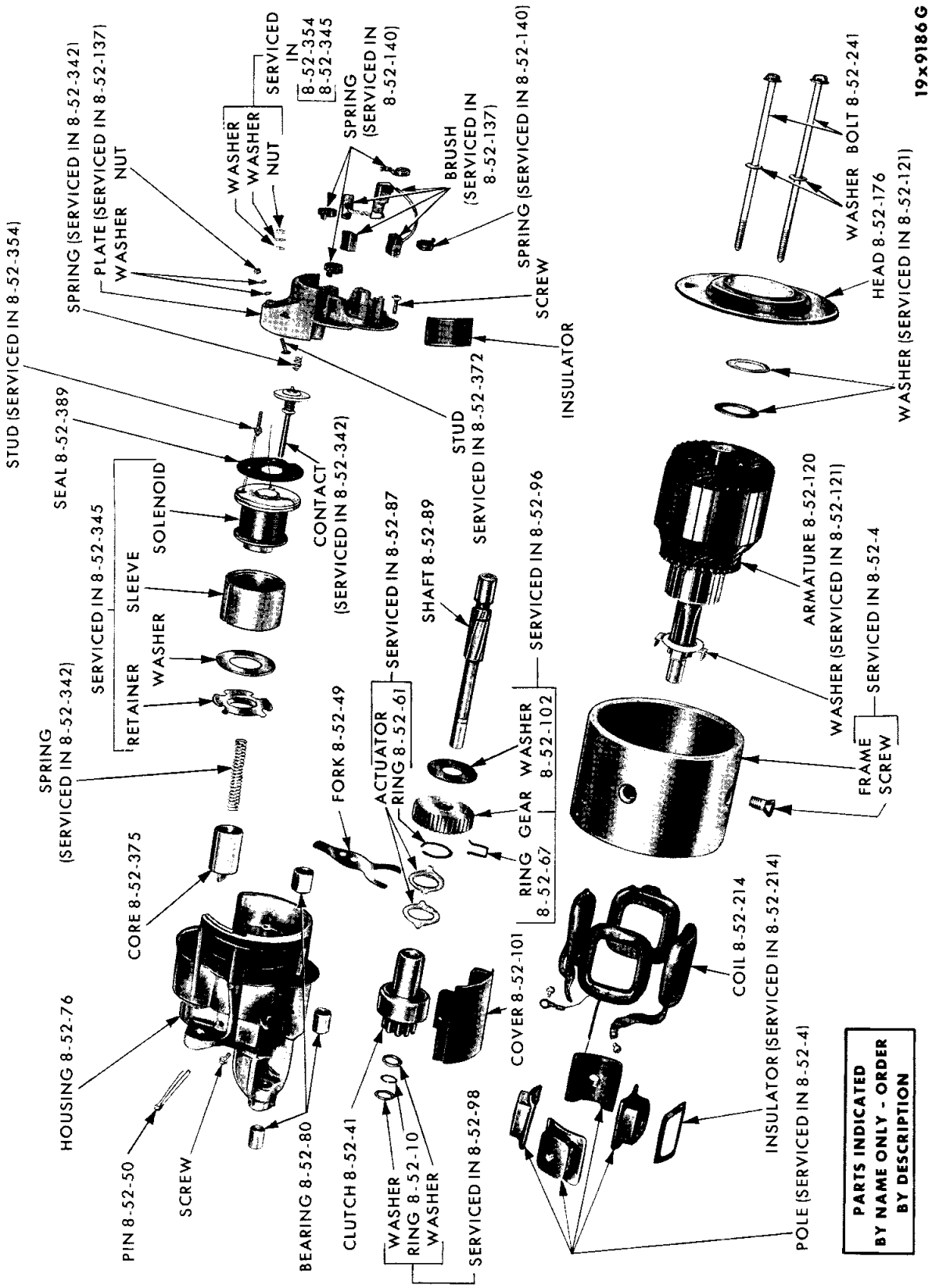

STARTER ASSEMBLY (2098500 AND 2095150)

MyMopar.com

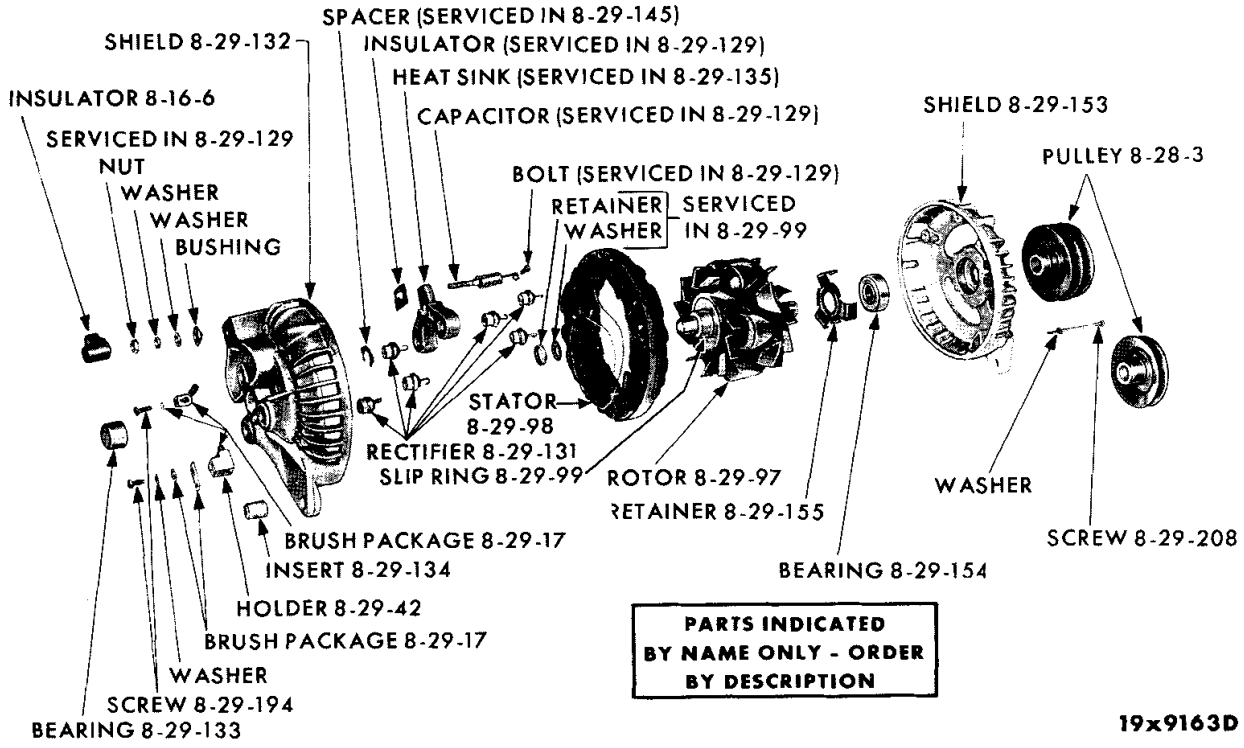

ALTERNATOR

NOTES

MyMopar.com

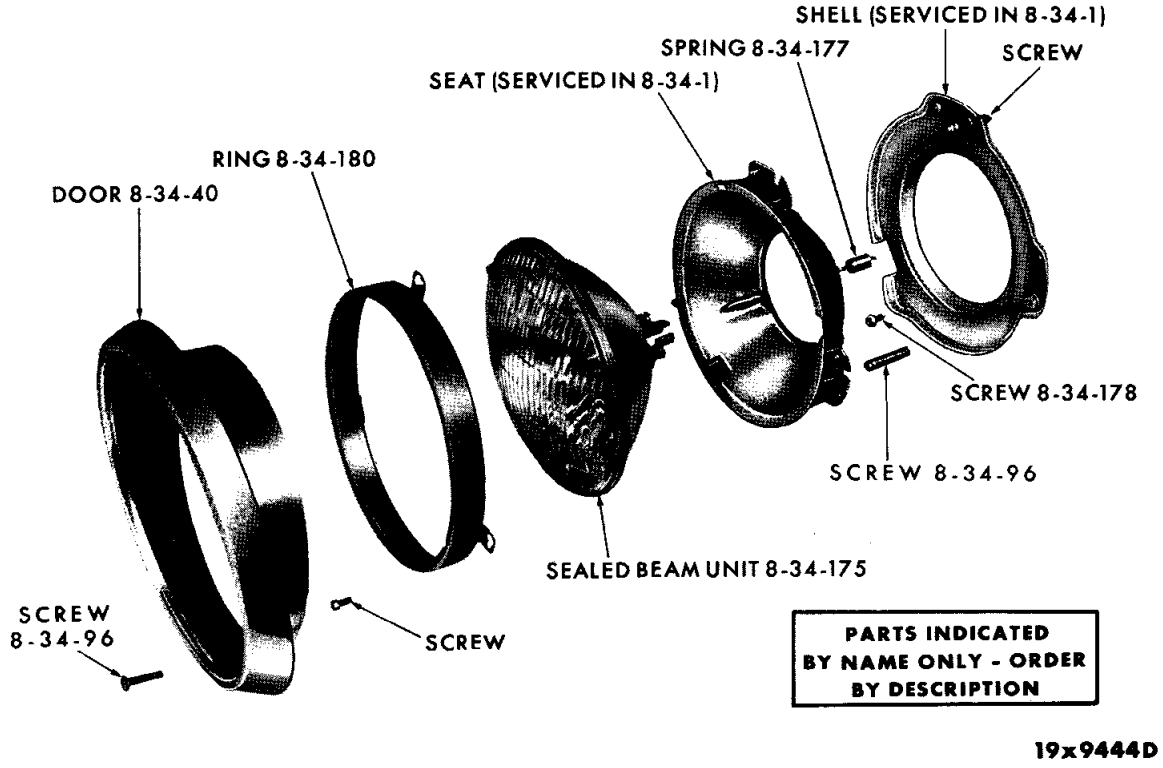

HEADLAMP - VALIANT

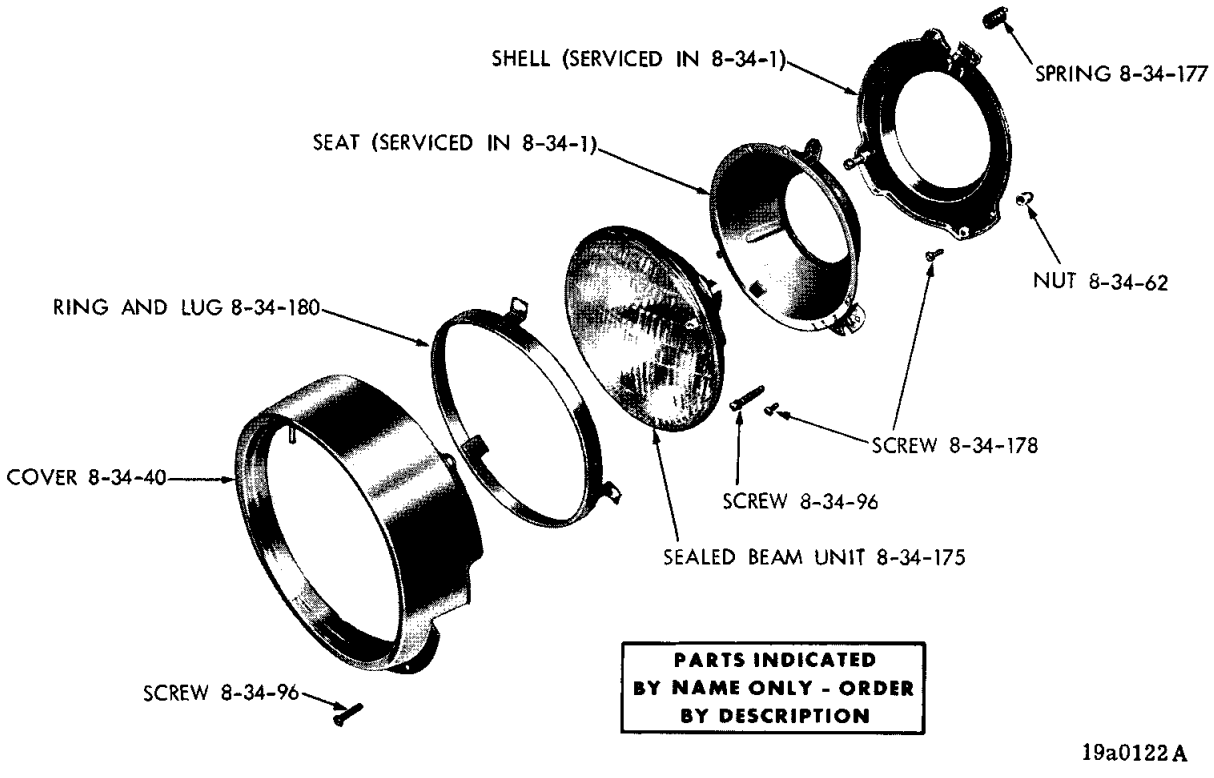

HEADLAMP - DART

MyMopar.com

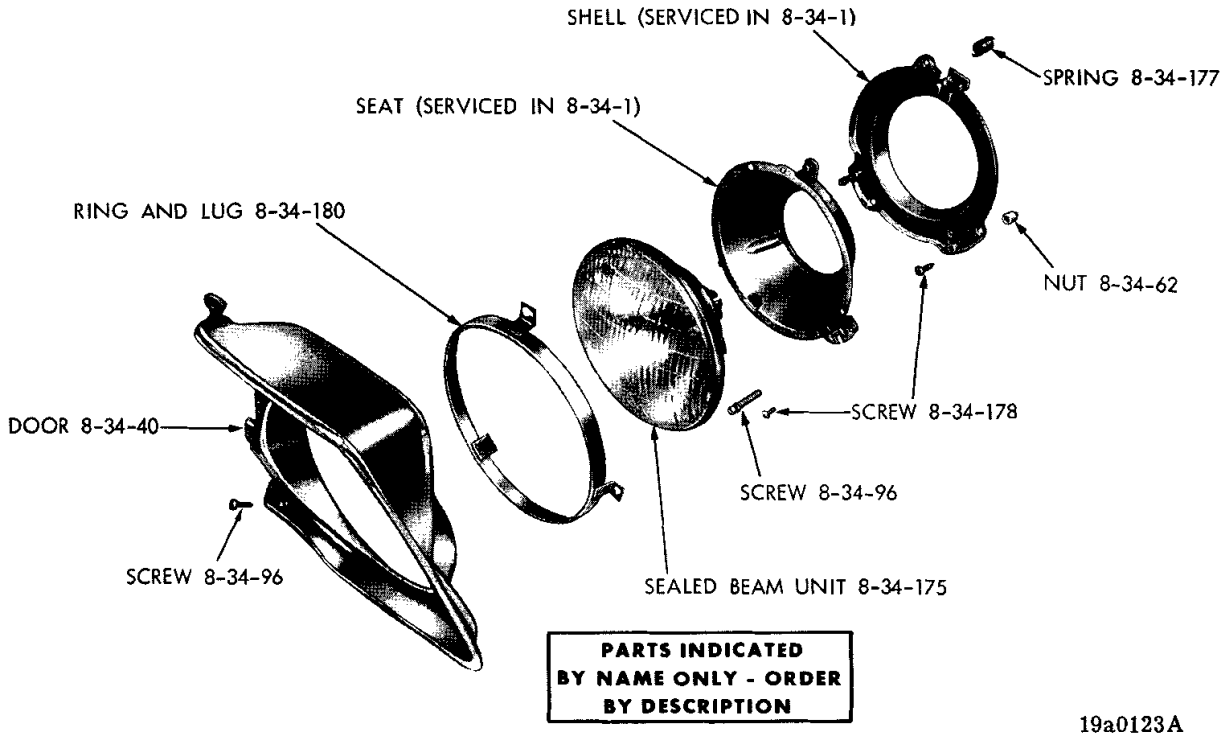

HEADLAMP - BELVEDERE

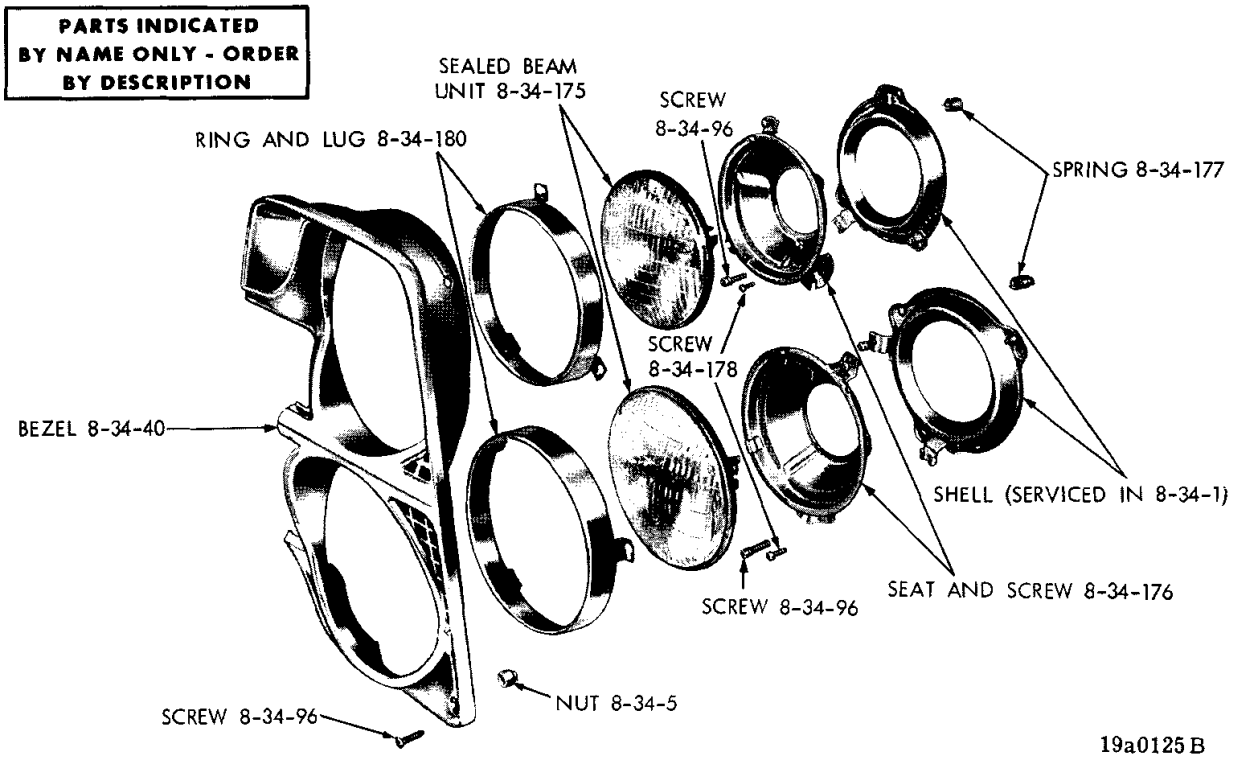

HEADLAMP - PLYMOUTH

MyMopar.com

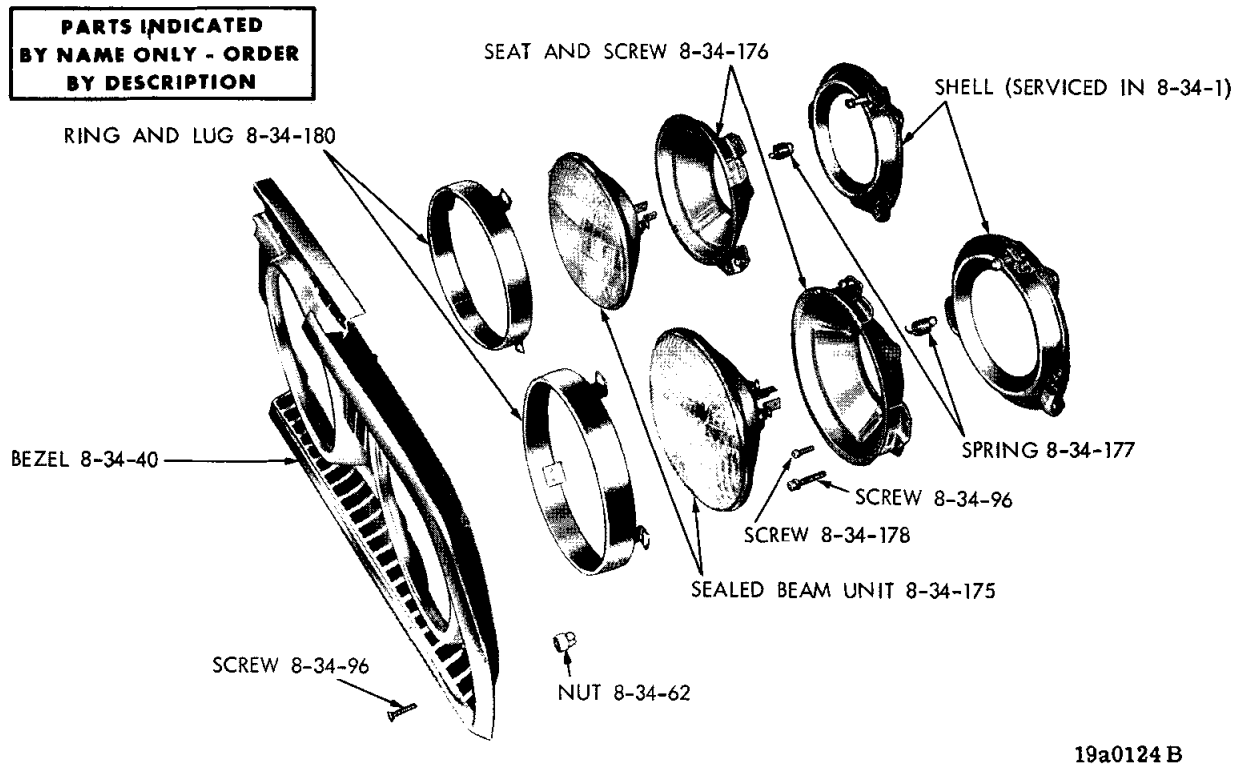

HEADLAMP - CORONET

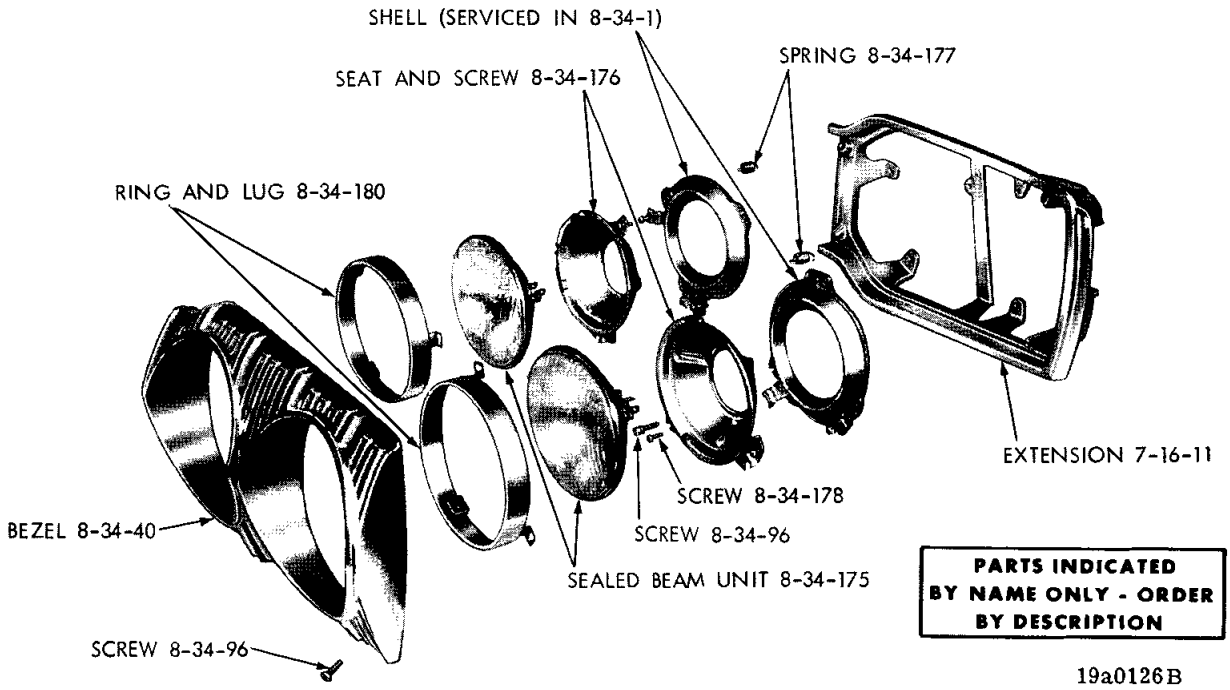

HEADLAMP - DODGE

MyMopar.com

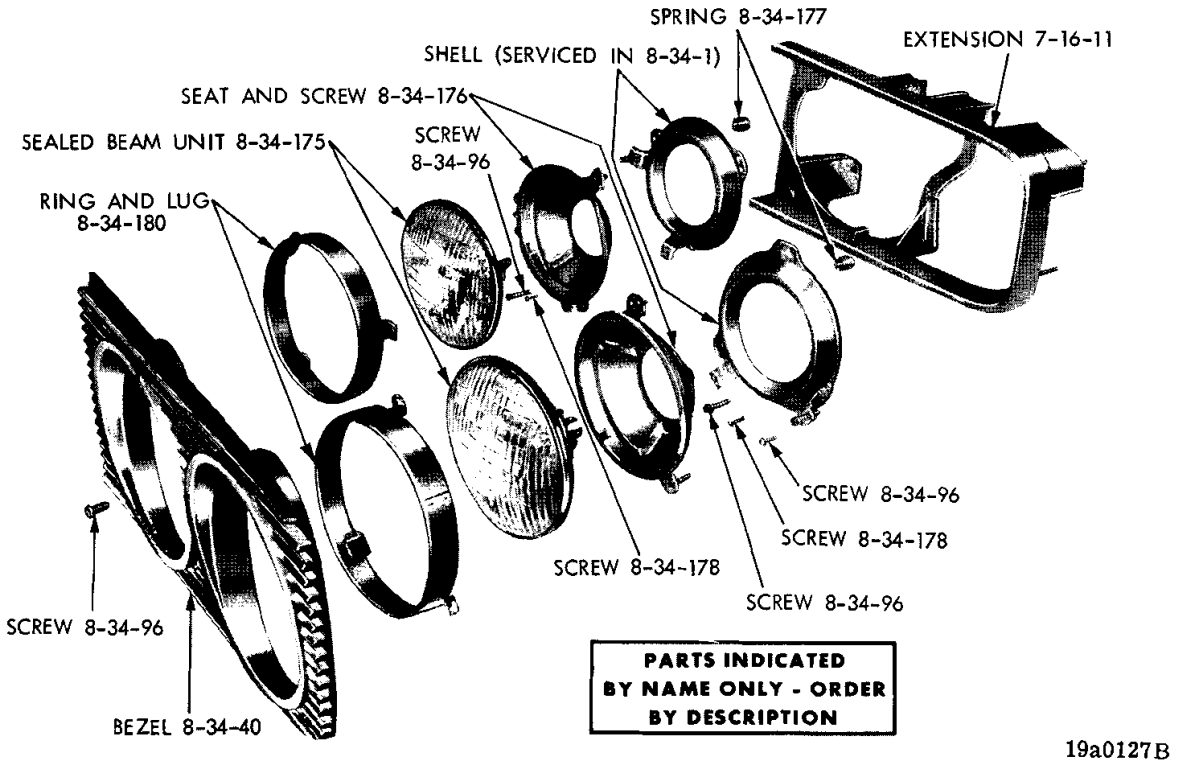

HEADLAMP - CHRYSLER (L)

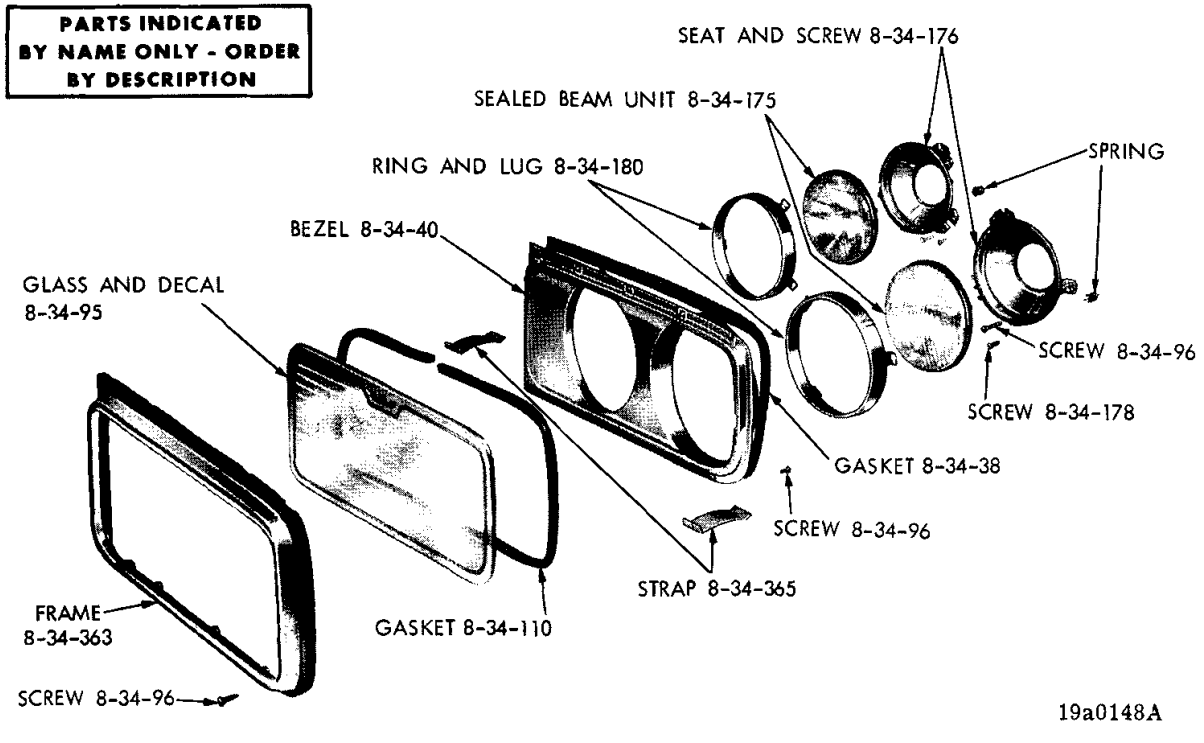

HEADLAMP - CHRYSLER (M-H-P)

MyMopar.com

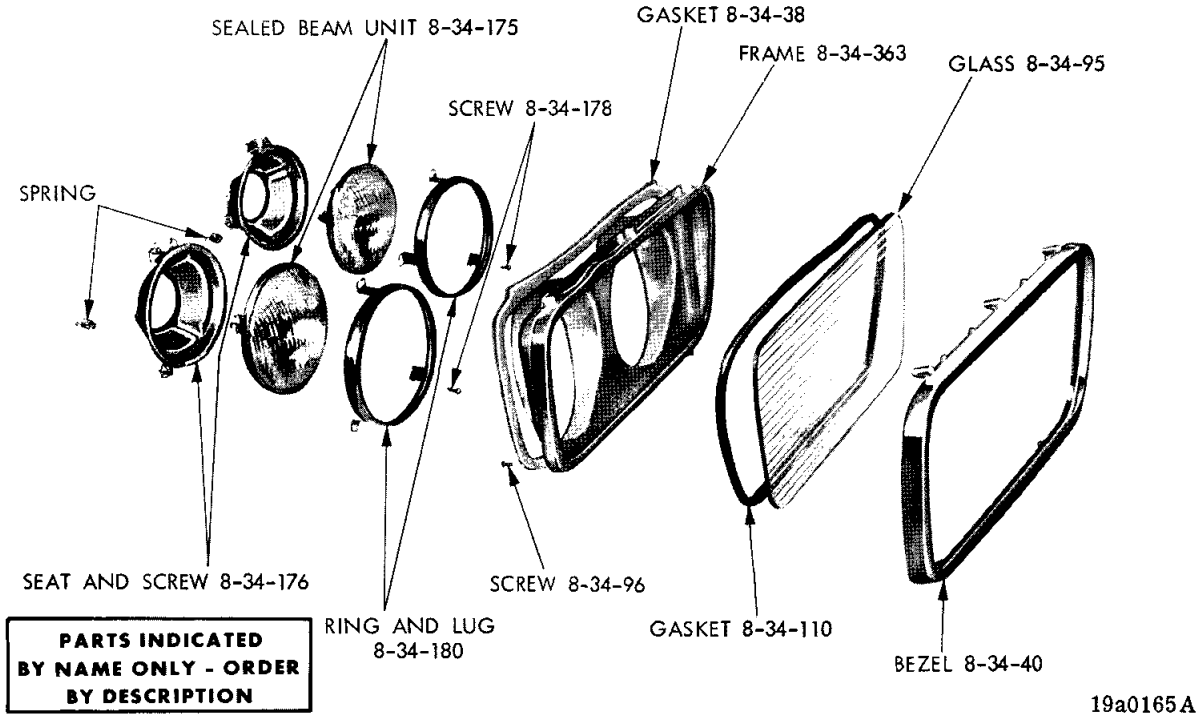

HEADLAMP - IMPERIAL

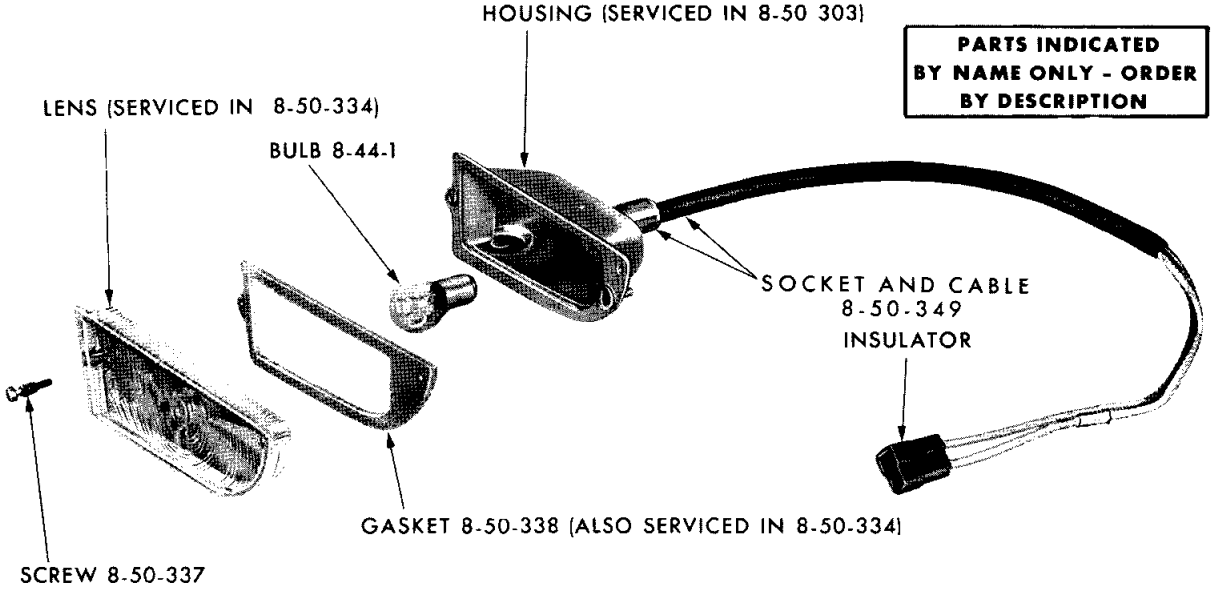

PARKING AND TURN SIGNAL LAMP - VALIANT (EXCEPT BARRACUDA)

MyMopar.com

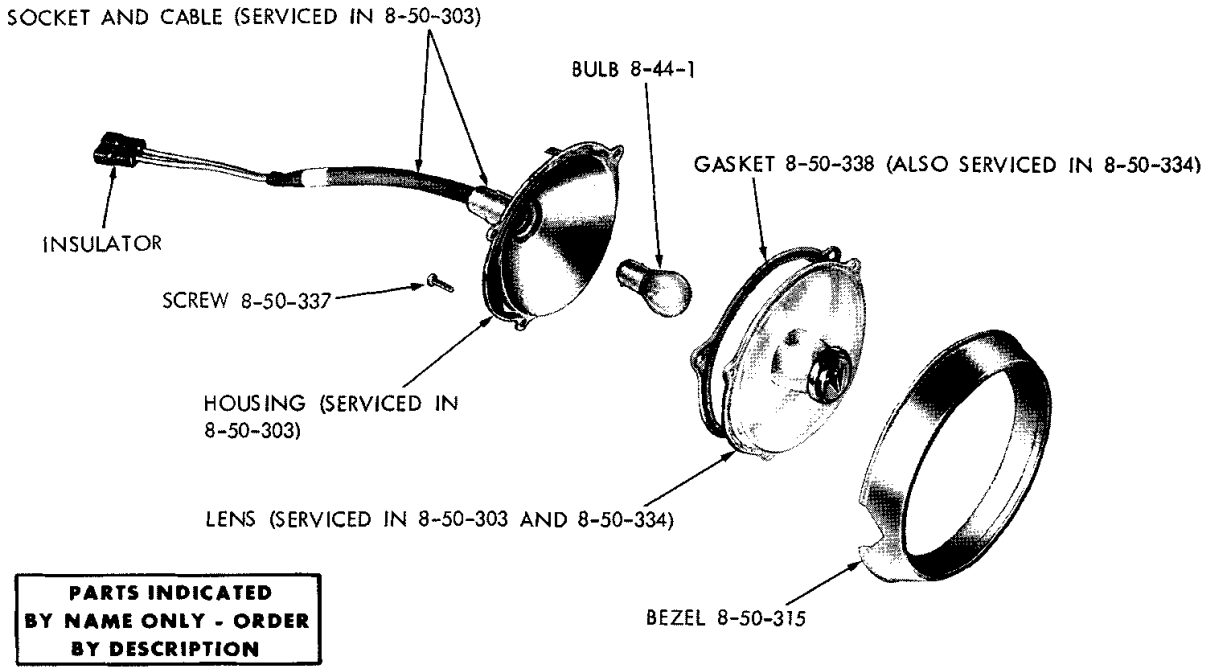

PARKING AND TURN SIGNAL LAMP - VALIANT BARRACUDA

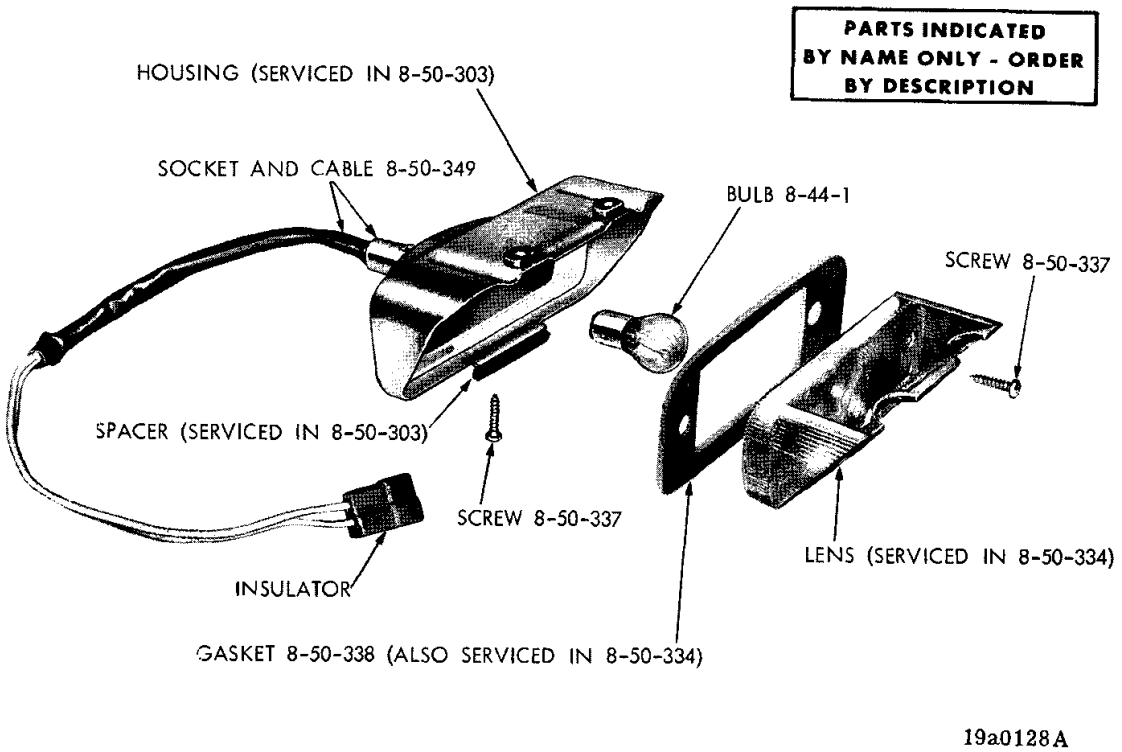

PARKING AND TURN SIGNAL LAMP - DART

MyMopar.com

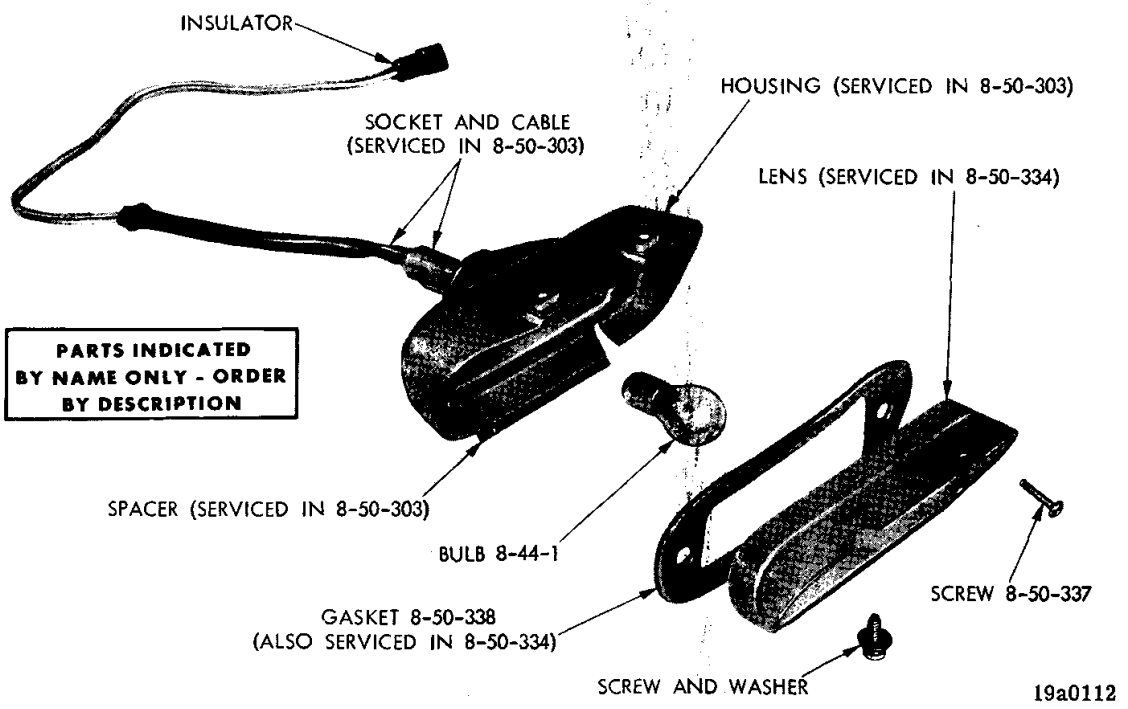

PARKING AND TURN SIGNAL LAMP - BELVEDERE

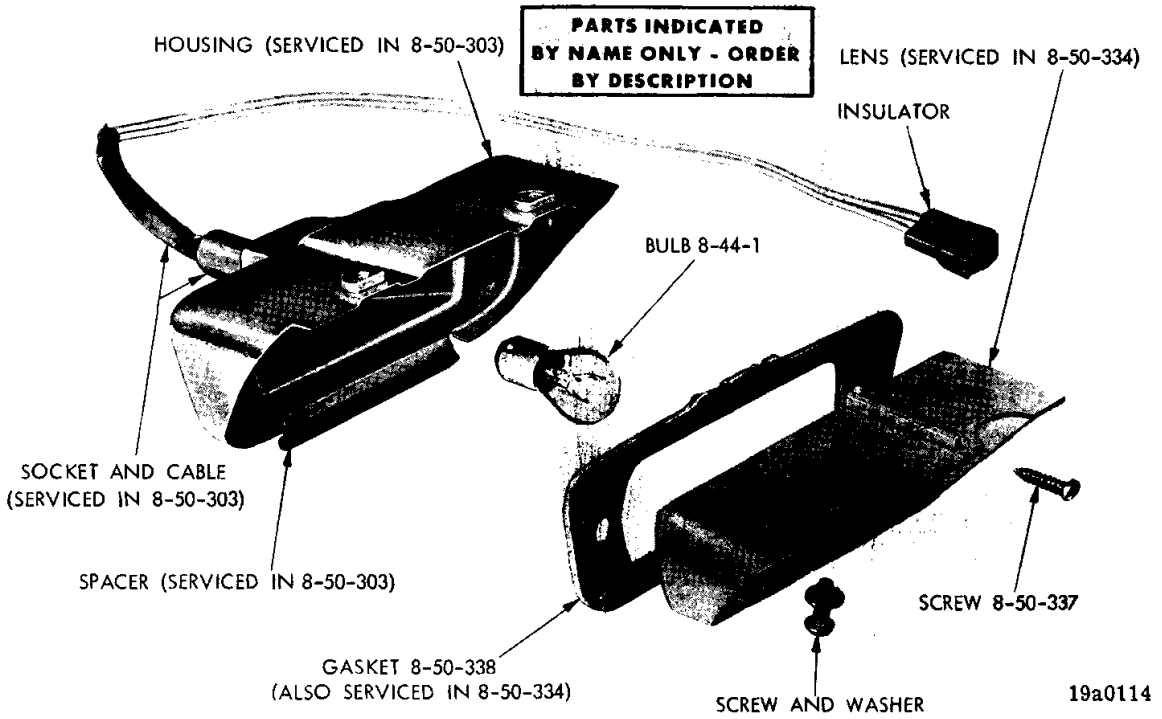

PARKING AND TURN SIGNAL LAMP - PLYMOUTH

MyMopar.com

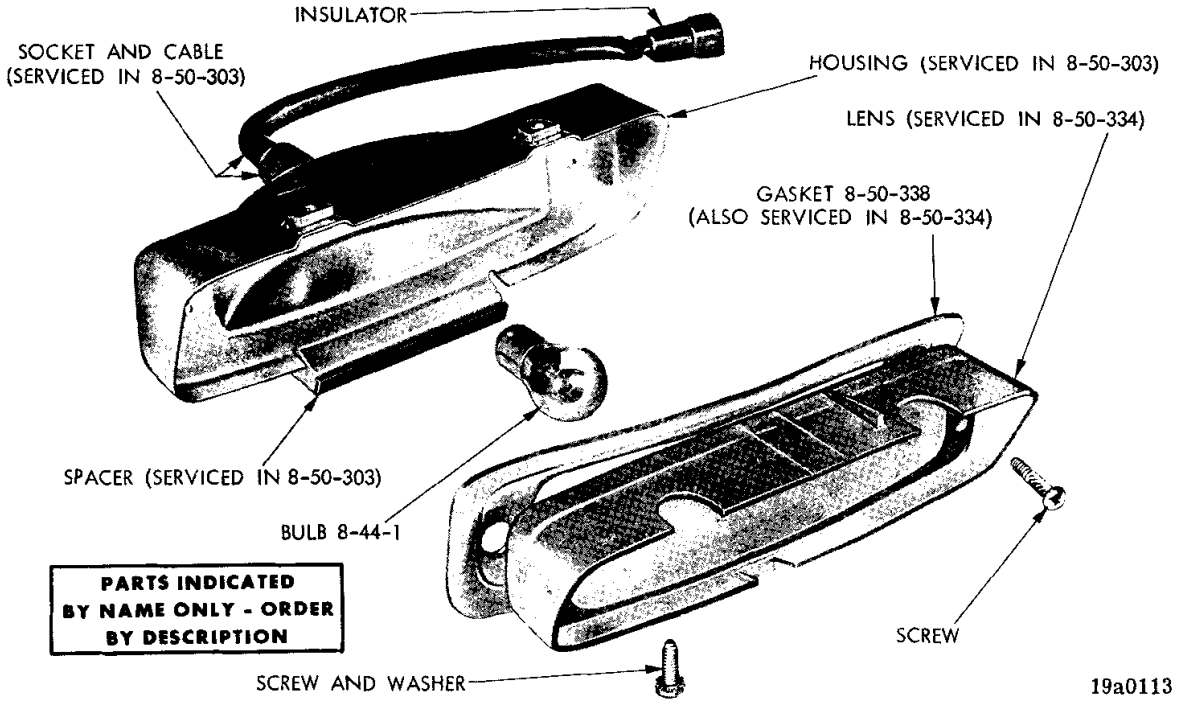

PARKING AND TURN SIGNAL LAMP - CORONET

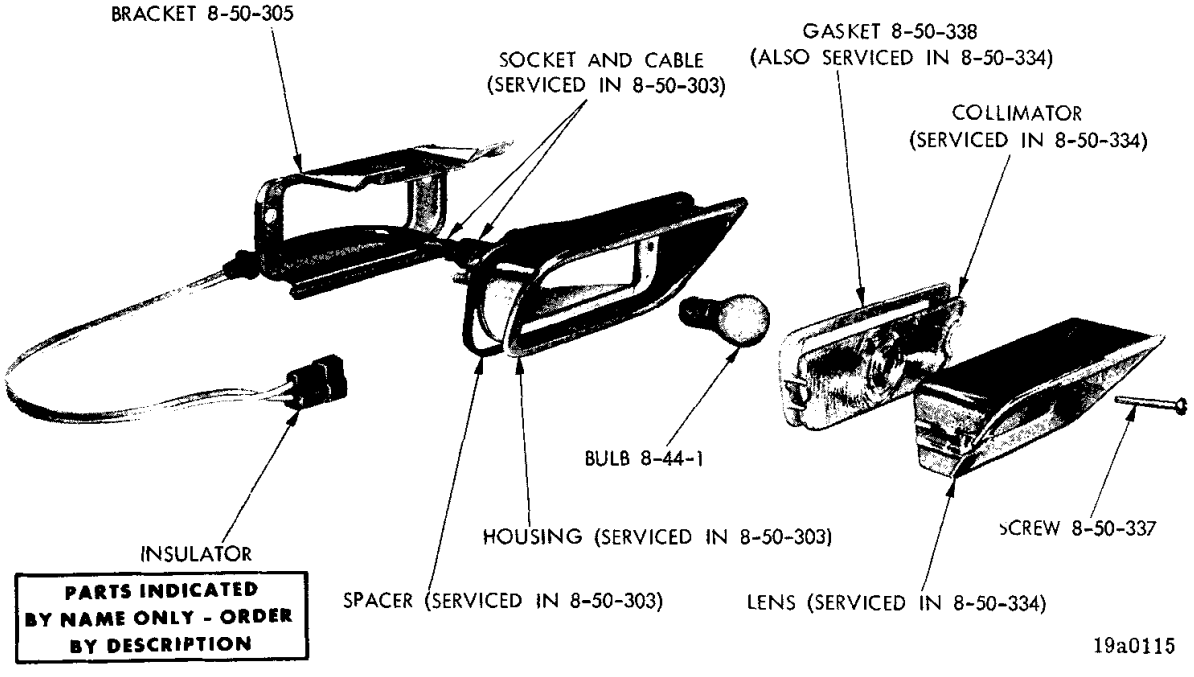

PARKING AND TURN SIGNAL LAMP - DODGE

MyMopar.com

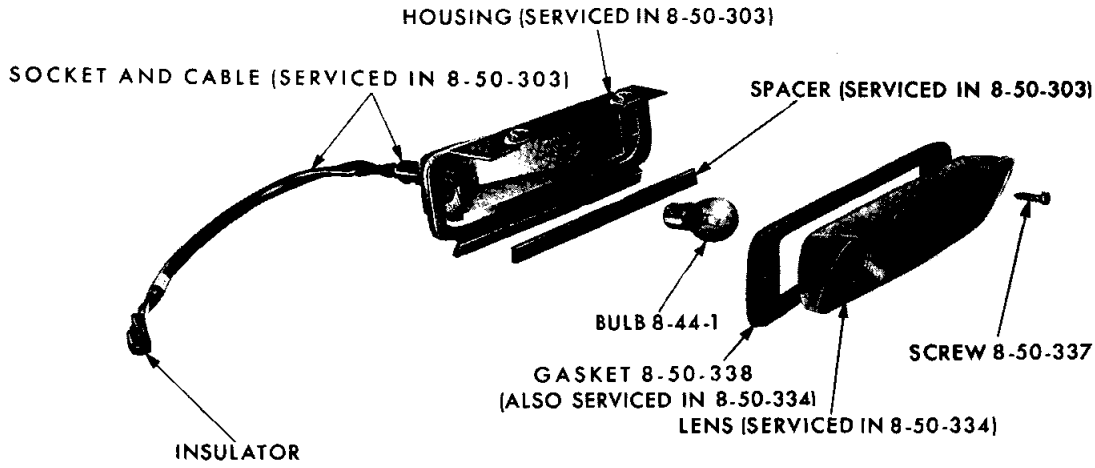

19x9461B

PARKING AND TURN SIGNAL LAMP - CHRYSLER

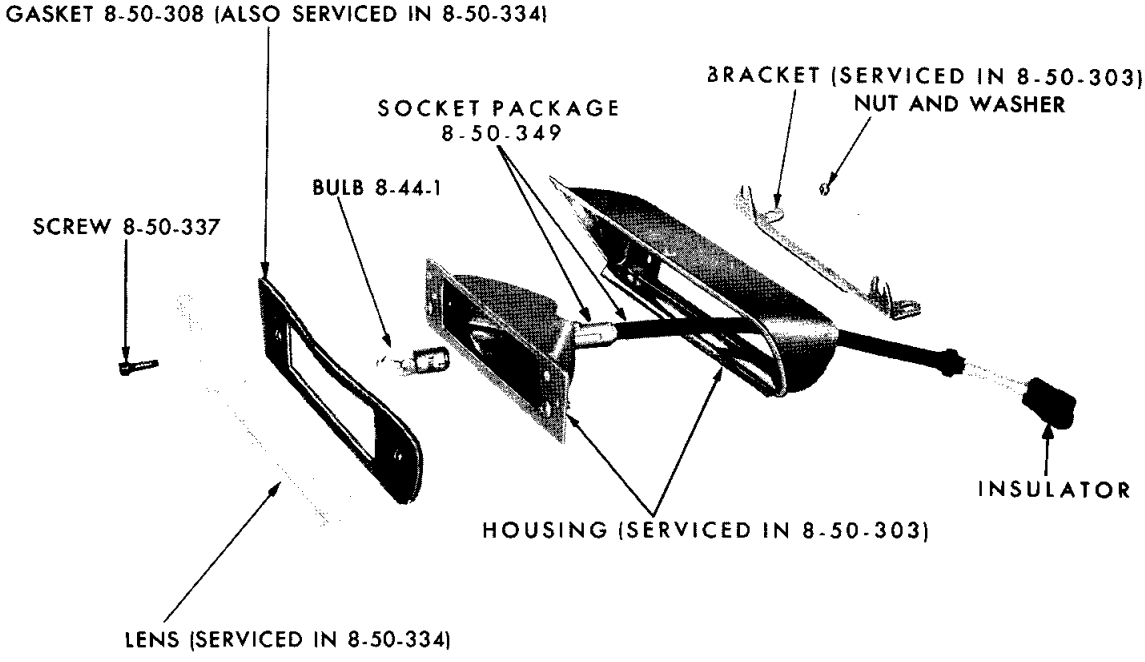

19x9755C

PARKING AND TURN SIGNAL LAMP - IMPERIAL

MyMopar.com

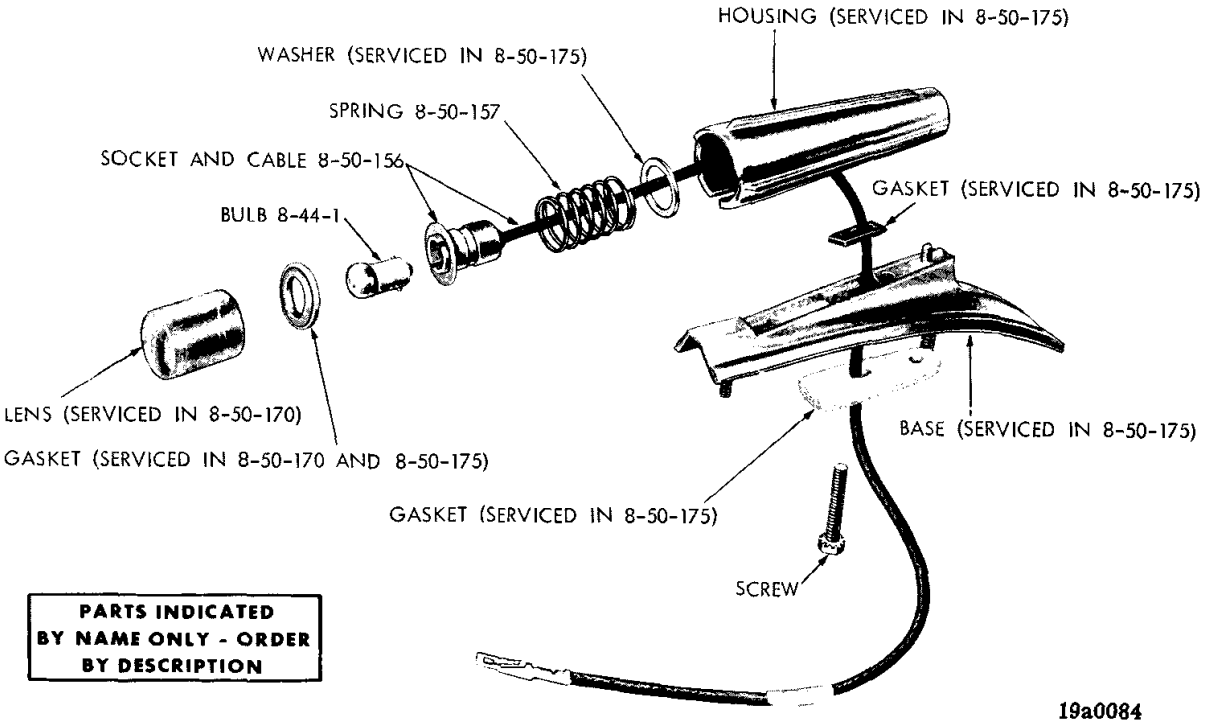

FRONT FENDER TURN SIGNAL INDICATOR LAMP - DODGE D2-P

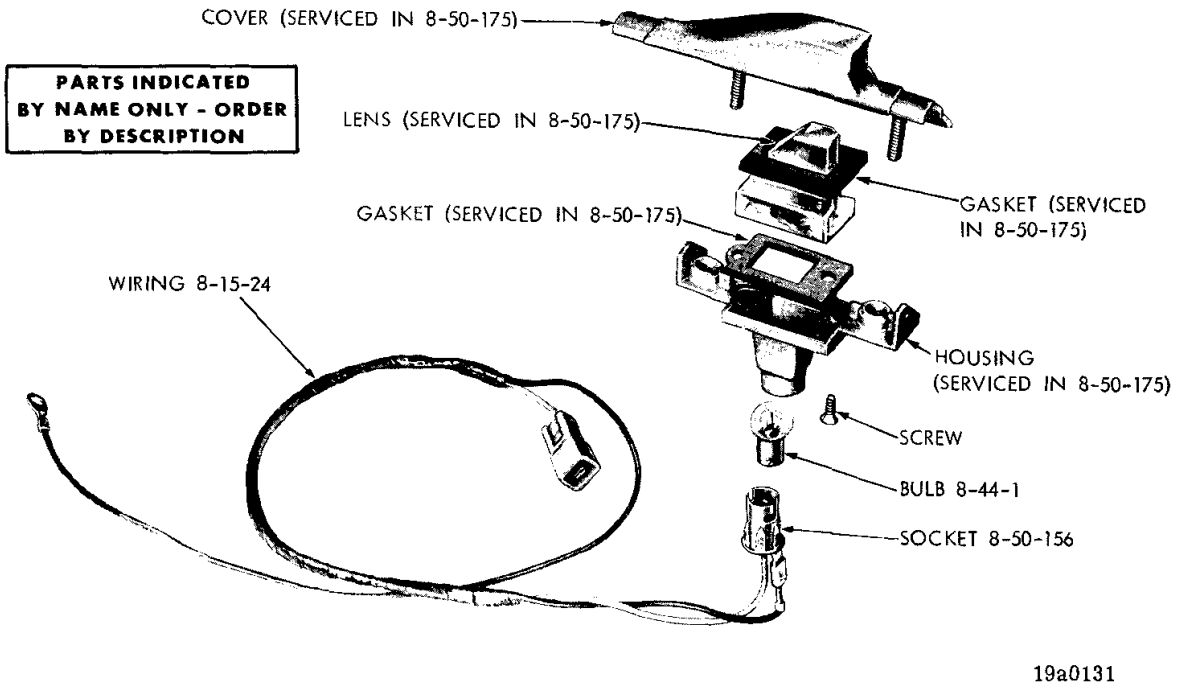

FRONT FENDER TURN SIGNAL INDICATOR LAMP - CHRYSLER

MyMopar.com

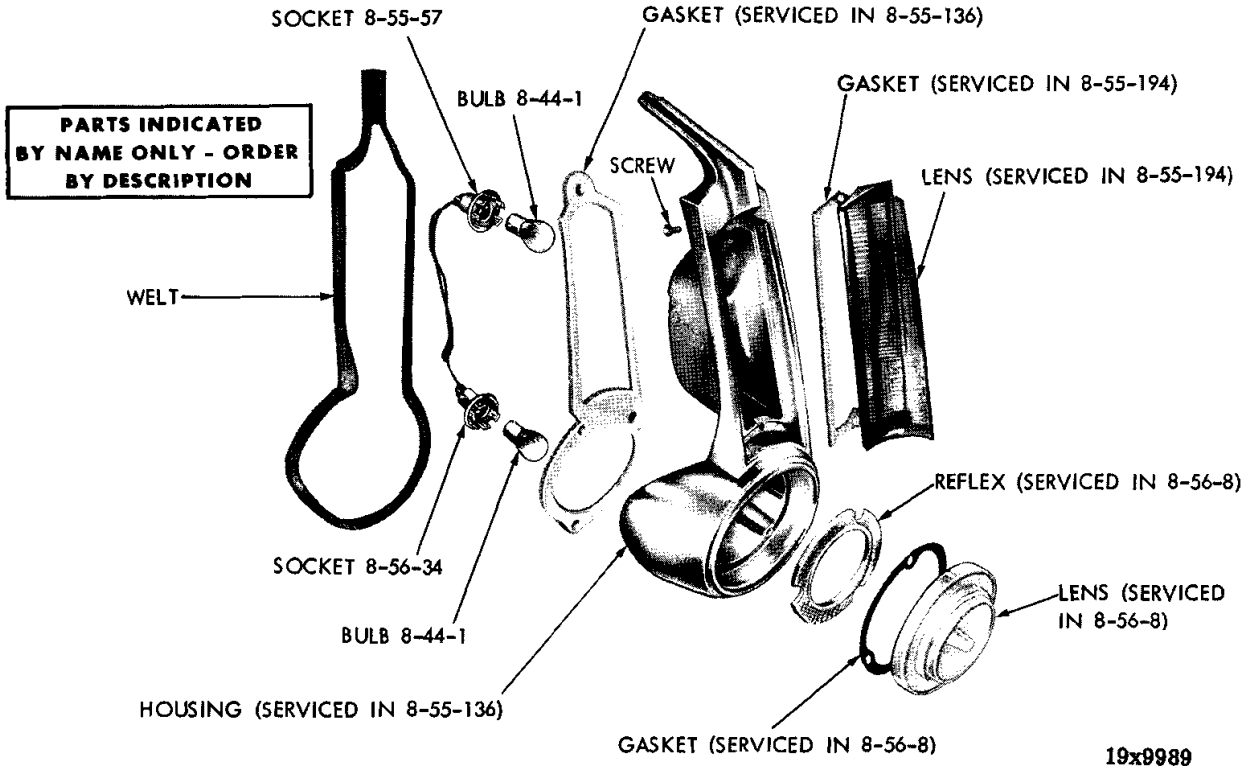

TAIL, STOP, TURN SIGNAL AND BACK-UP LAMP - VALIANT (EXCEPT STATION WAGON)

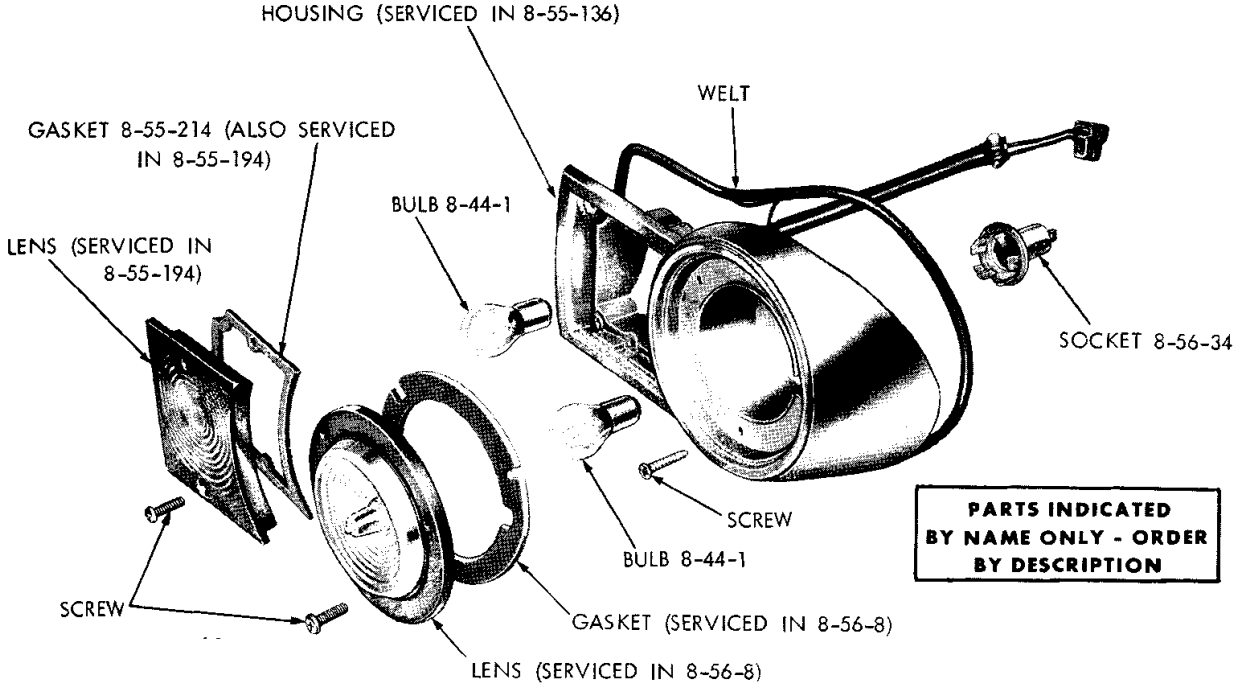

TAIL, STOP, TURN SIGNAL AND BACK-UP LAMP - VALIANT (STATION WAGON)

MyMopar.com

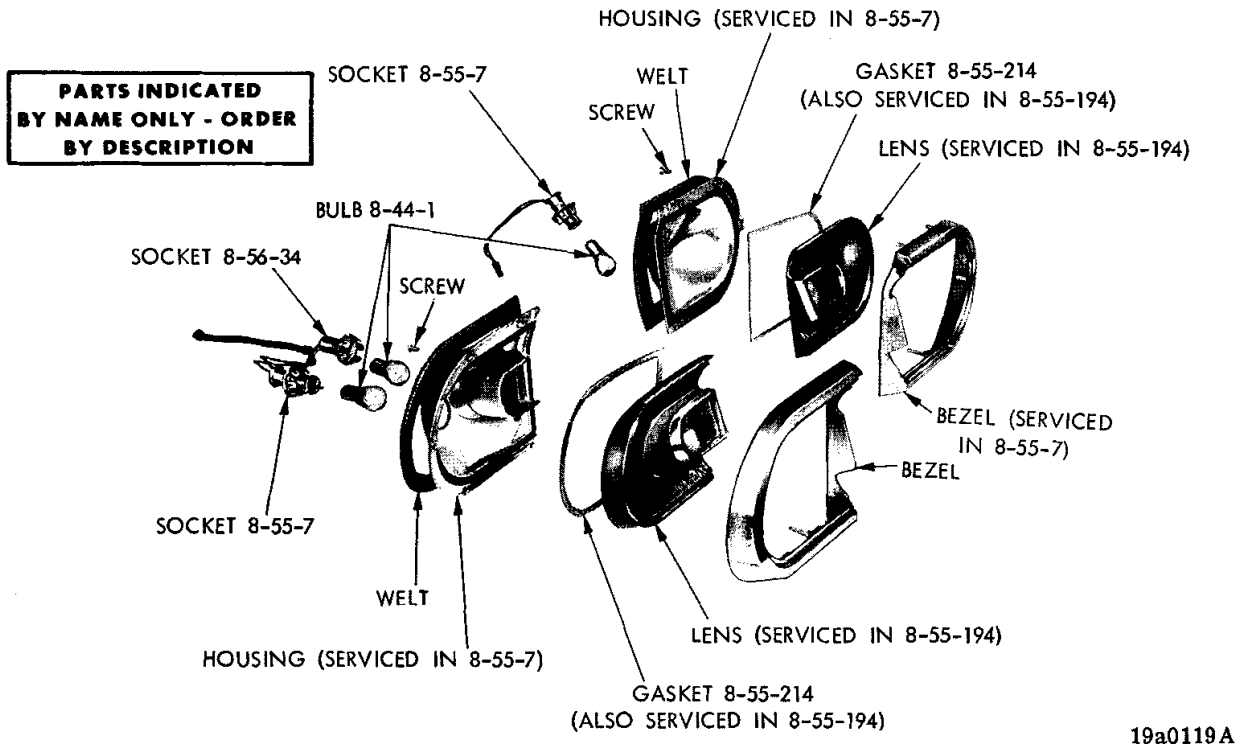

TAIL, STOP, TURN SIGNAL AND BACK-UP LAMP - DART (EXCEPT STATION WAGON)

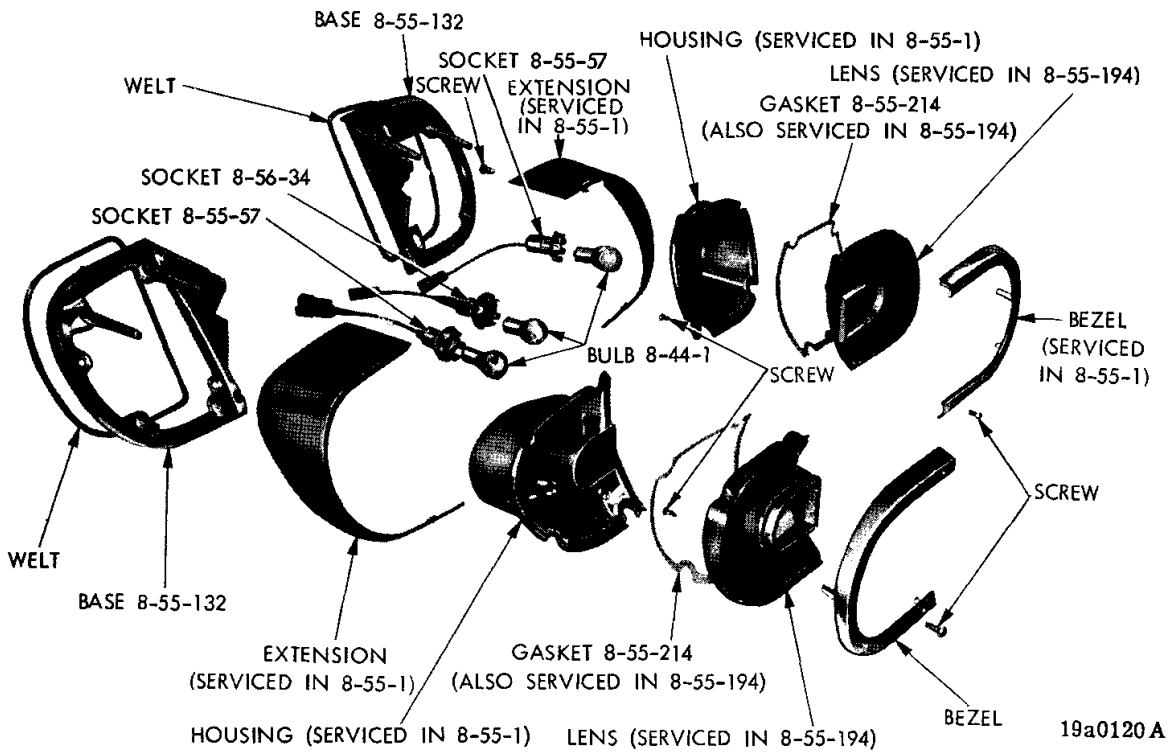

TAIL, STOP, TURN SIGNAL AND BACK-UP LAMP - DART (STATION WAGON)

MyMopar.com

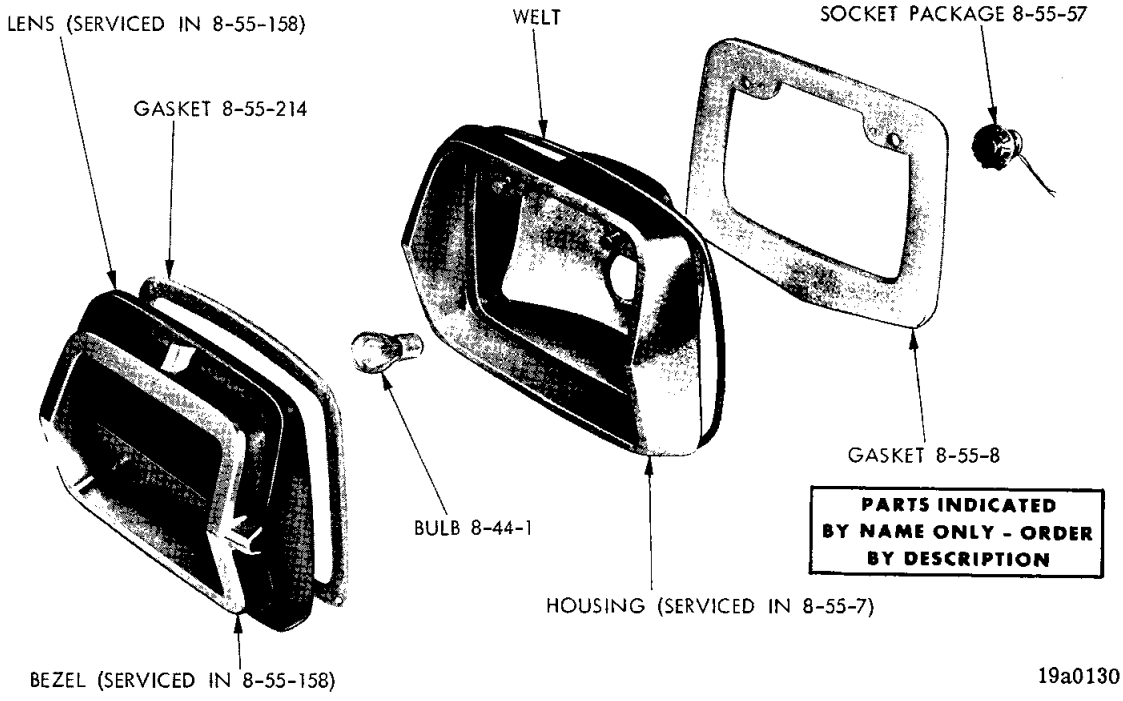

TAIL, STOP AND TURN SIGNAL LAMP -
BELVEDERE H AND P (EXCEPT STATION WAGON)

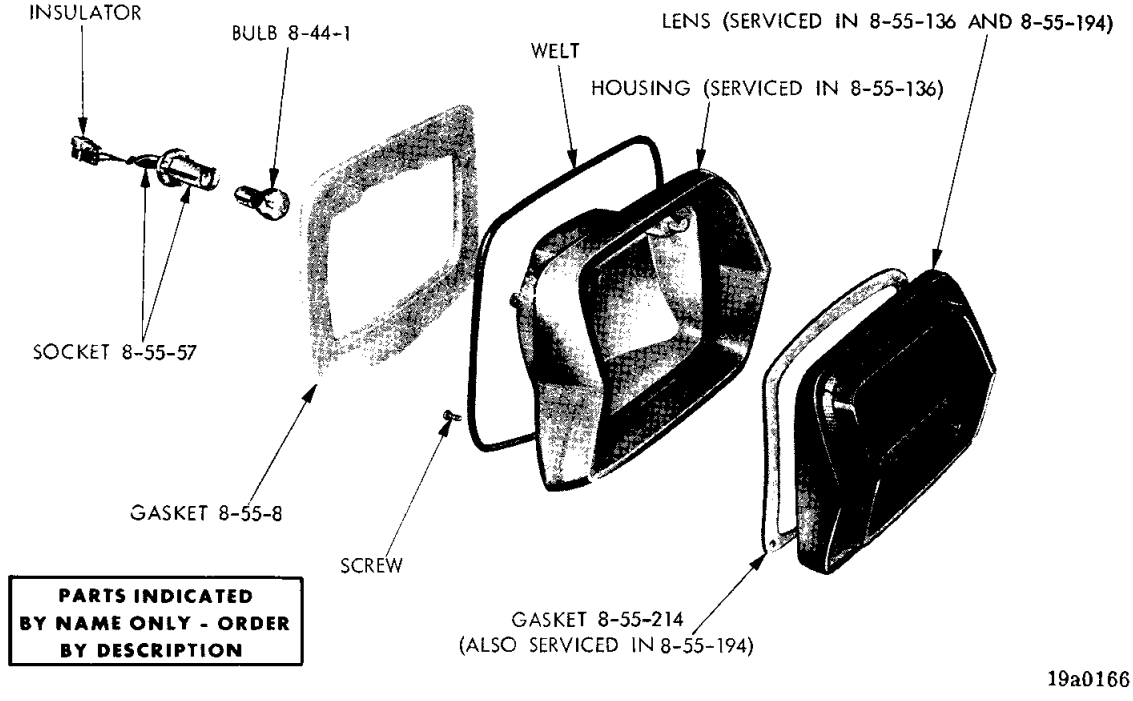

TAIL, STOP AND TURN SIGNAL LAMP -
BELVEDERE (STATION WAGON)

MyMopar.com

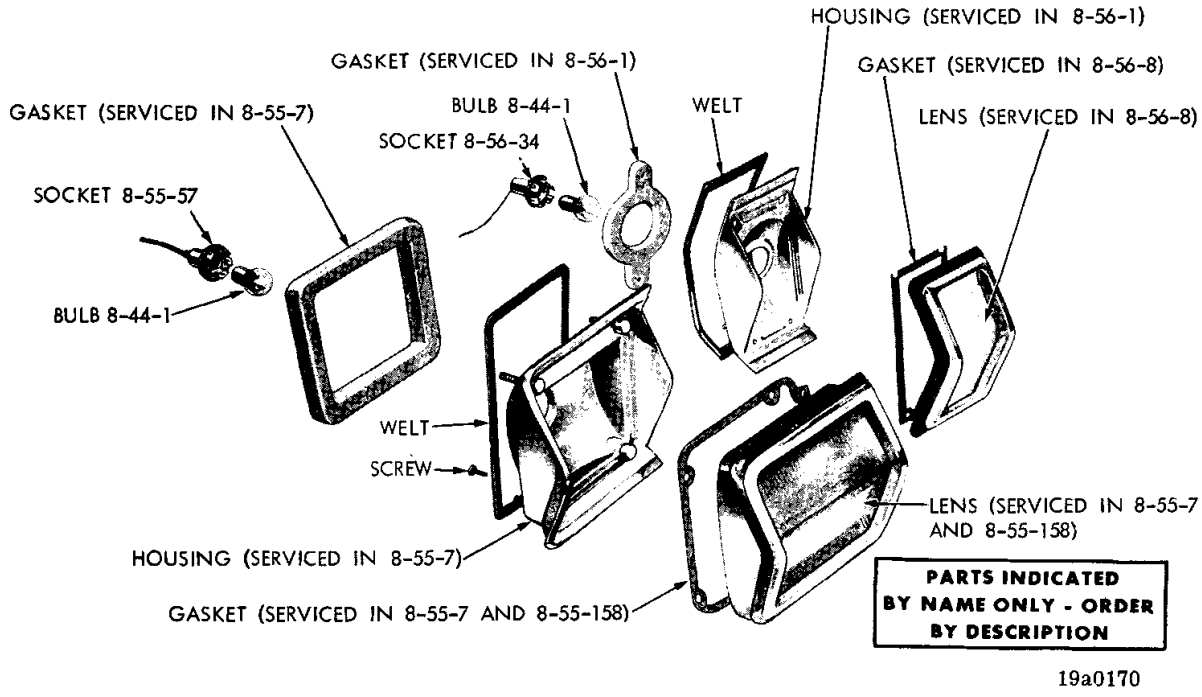

TAIL, STOP, TURN SIGNAL AND BACK-UP LAMP - PLYMOUTH L AND M (EXCEPT STATION WAGON)

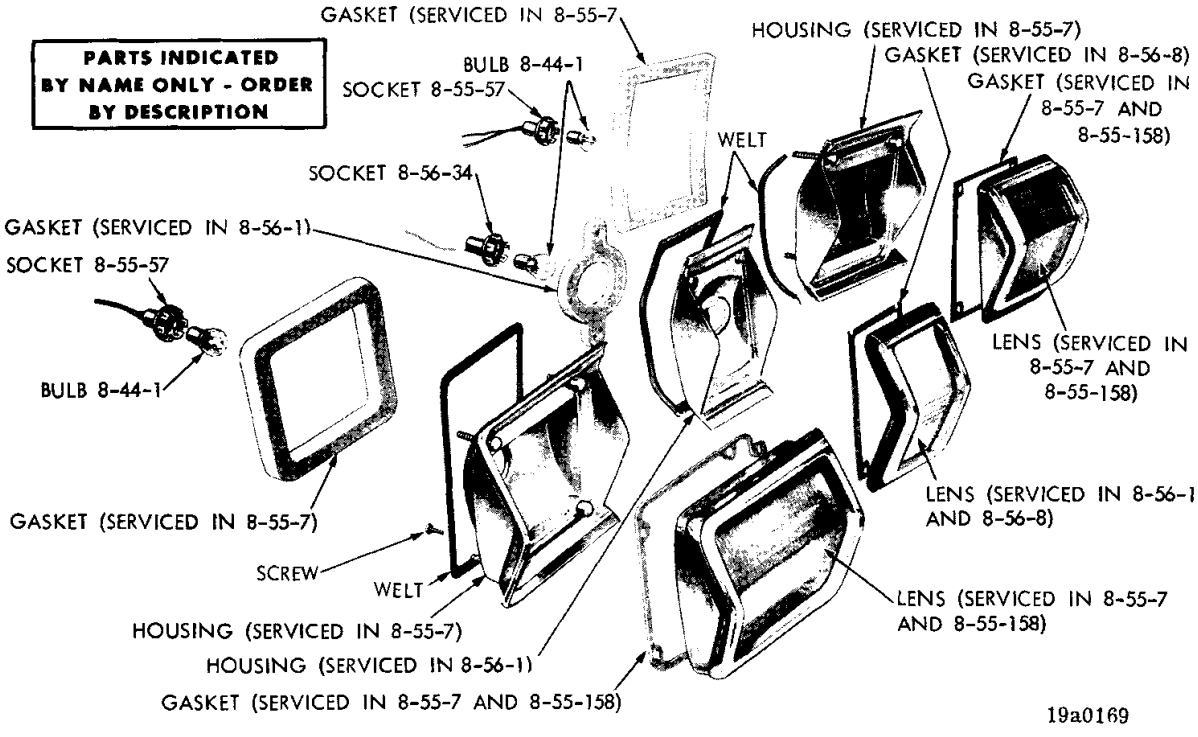

TAIL, STOP, TURN SIGNAL AND BACK-UP LAMP - PLYMOUTH H AND P (EXCEPT STATION WAGON)

MyMopar.com

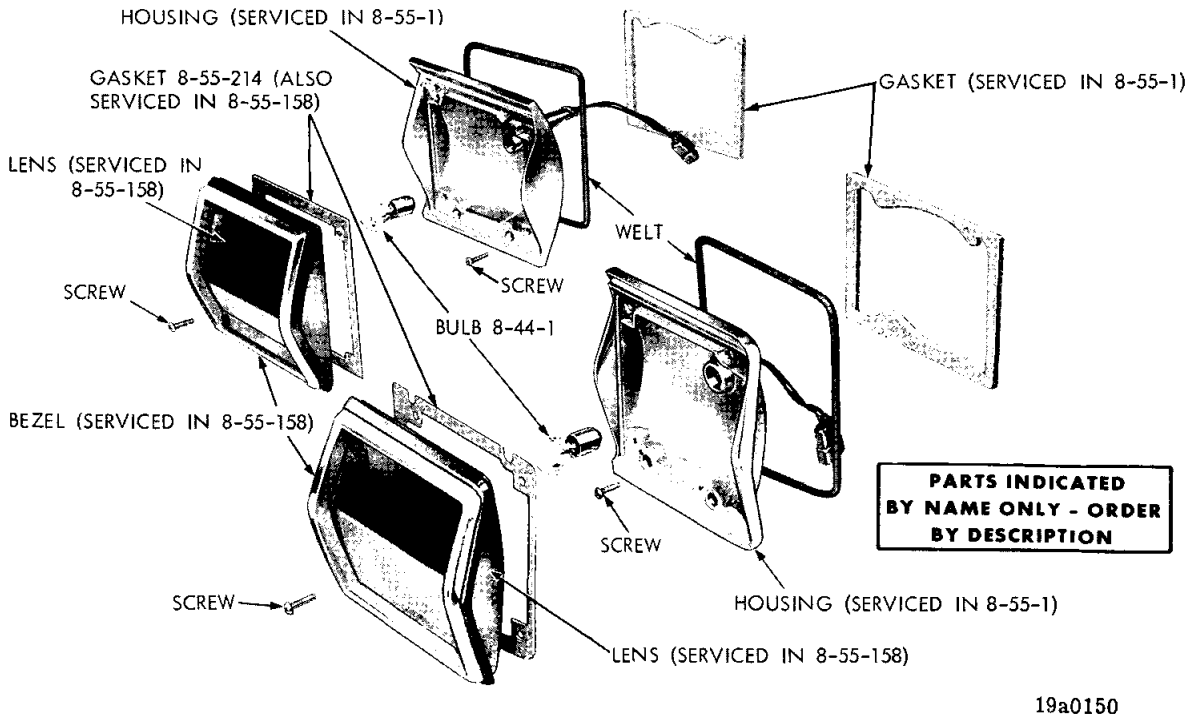

TAIL, STOP AND TURN SIGNAL LAMP - PLYMOUTH (STATION WAGON)

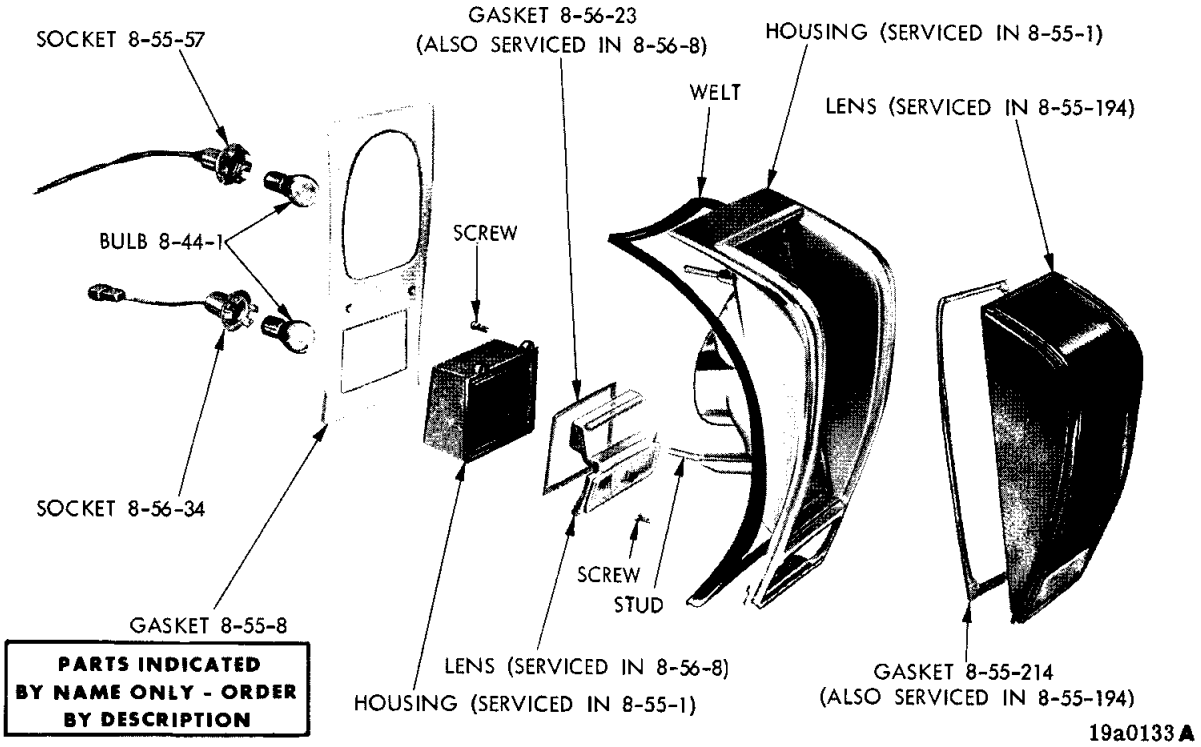

TAIL, STOP, TURN SIGNAL AND BACK-UP LAMP - CORONET L AND H (EXCEPT STATION WAGON)

MyMopar.com

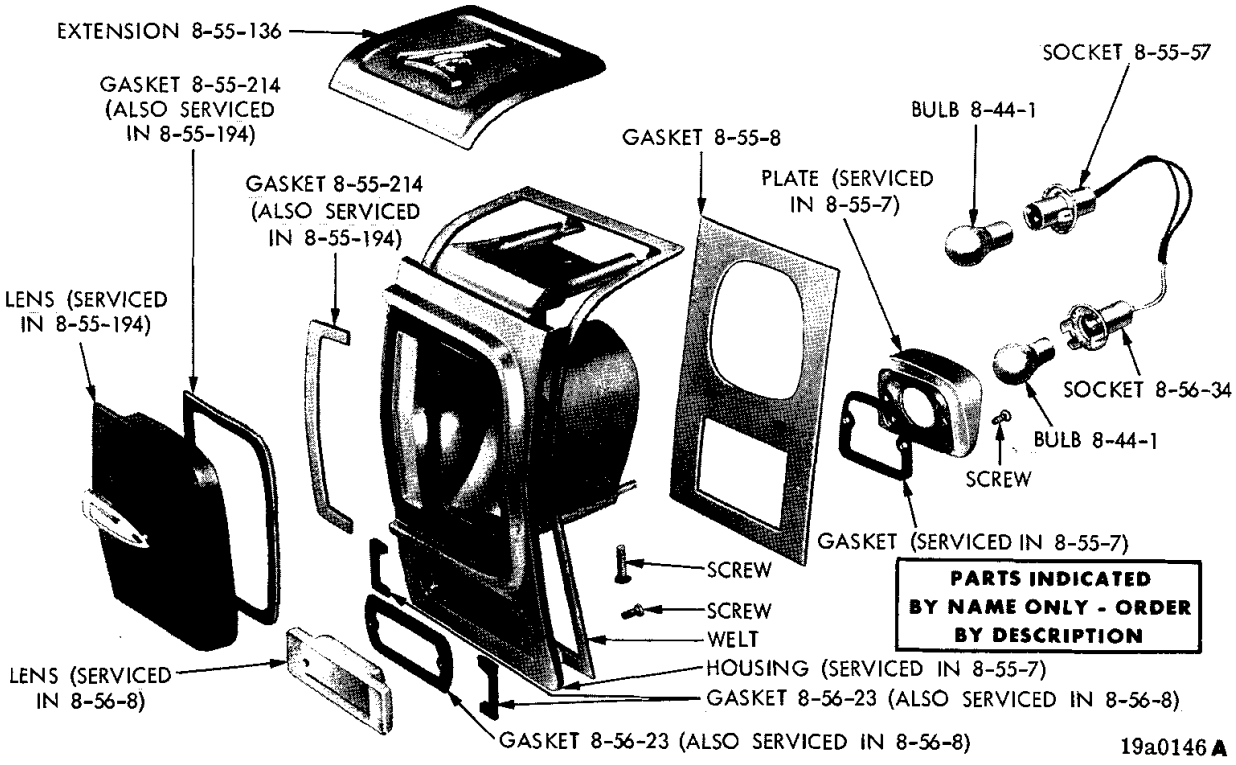

TAIL, STOP, TURN SIGNAL AND BACK-UP LAMP - CORONET P (EXCEPT STATION WAGON)

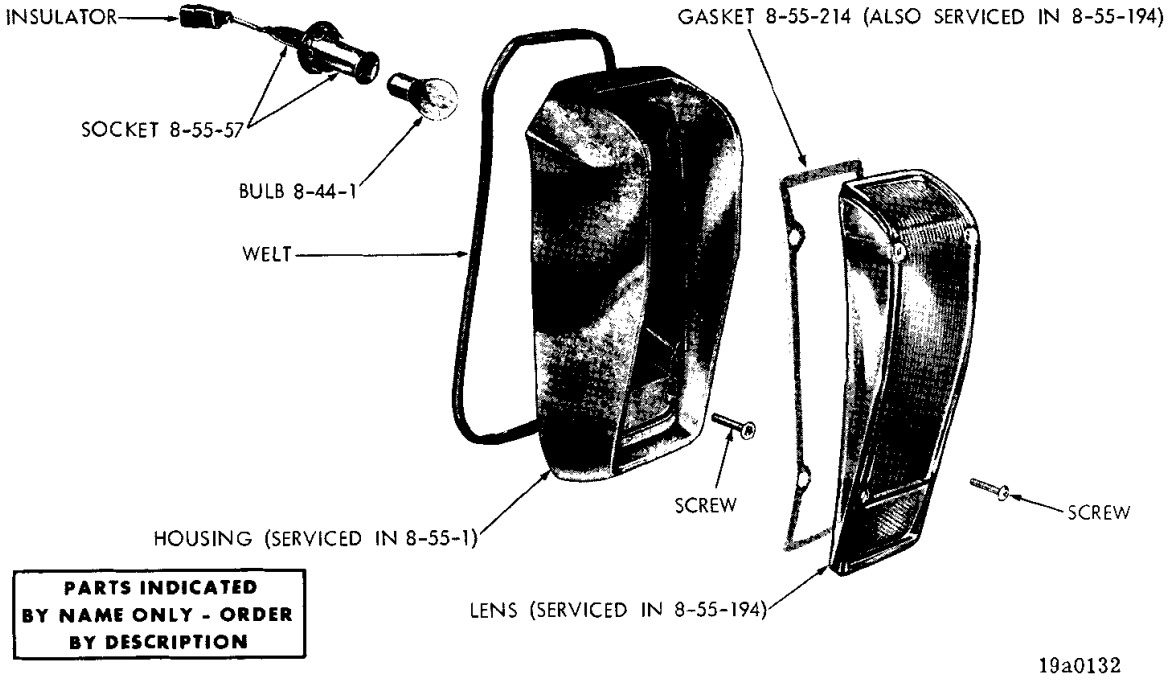

TAIL, STOP AND TURN SIGNAL LAMP - CORONET (STATION WAGON)

MyMopar.com

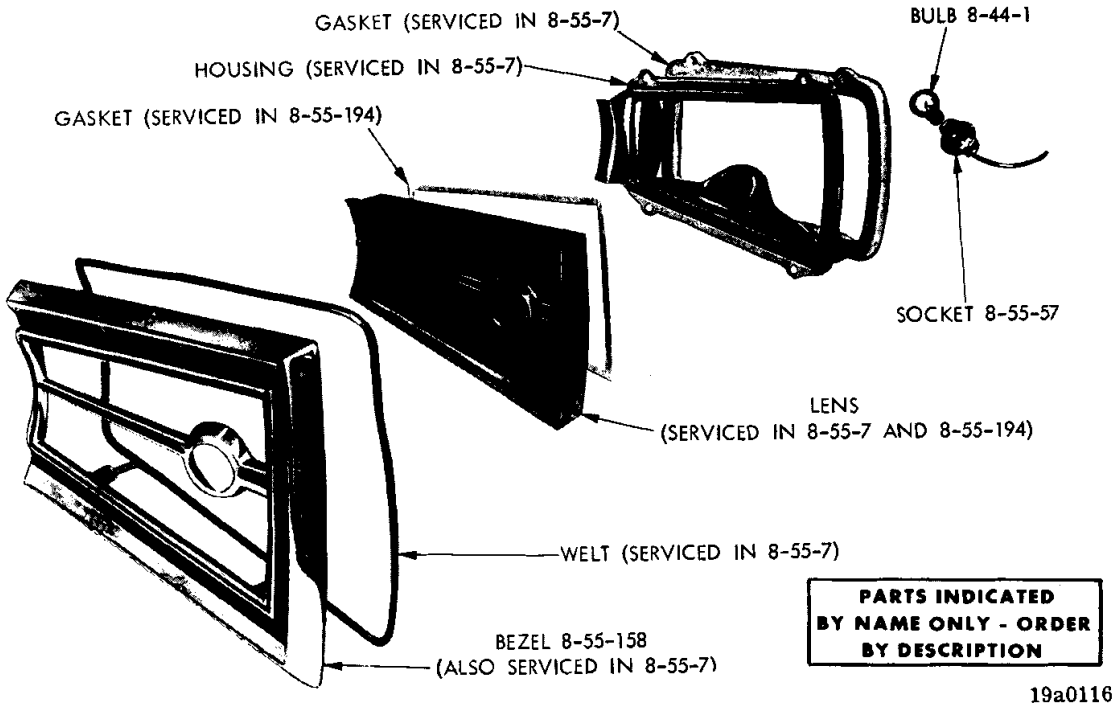

TAIL, STOP AND TURN SIGNAL LAMP - DODGE L AND H (EXCEPT STATION WAGON)

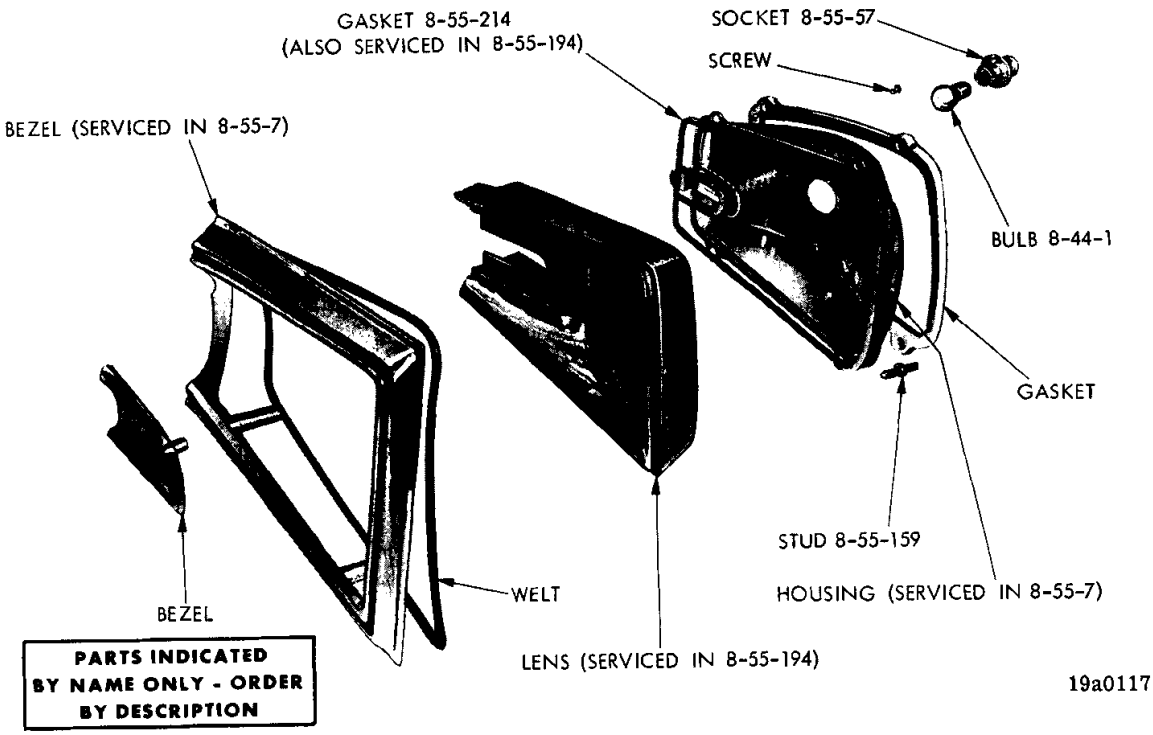

TAIL, STOP AND TURN SIGNAL LAMP - DODGE (P)

MyMopar.com

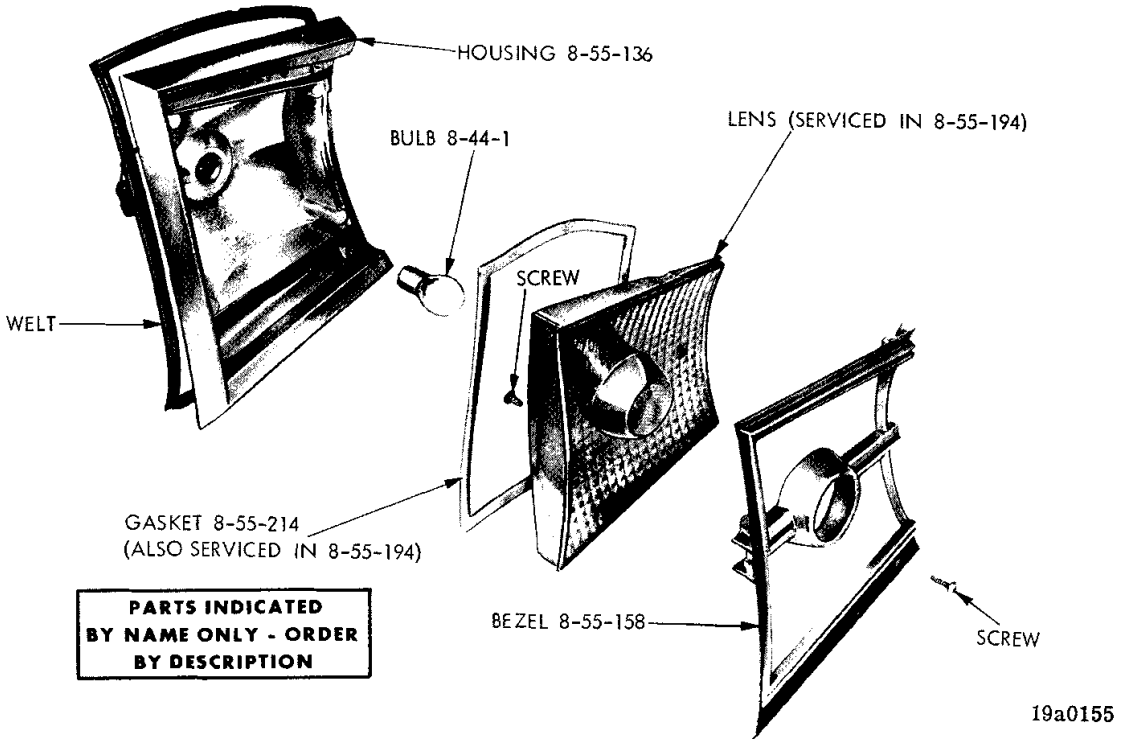

TAIL, STOP AND TURN SIGNAL LAMP - DODGE (STATION WAGON)

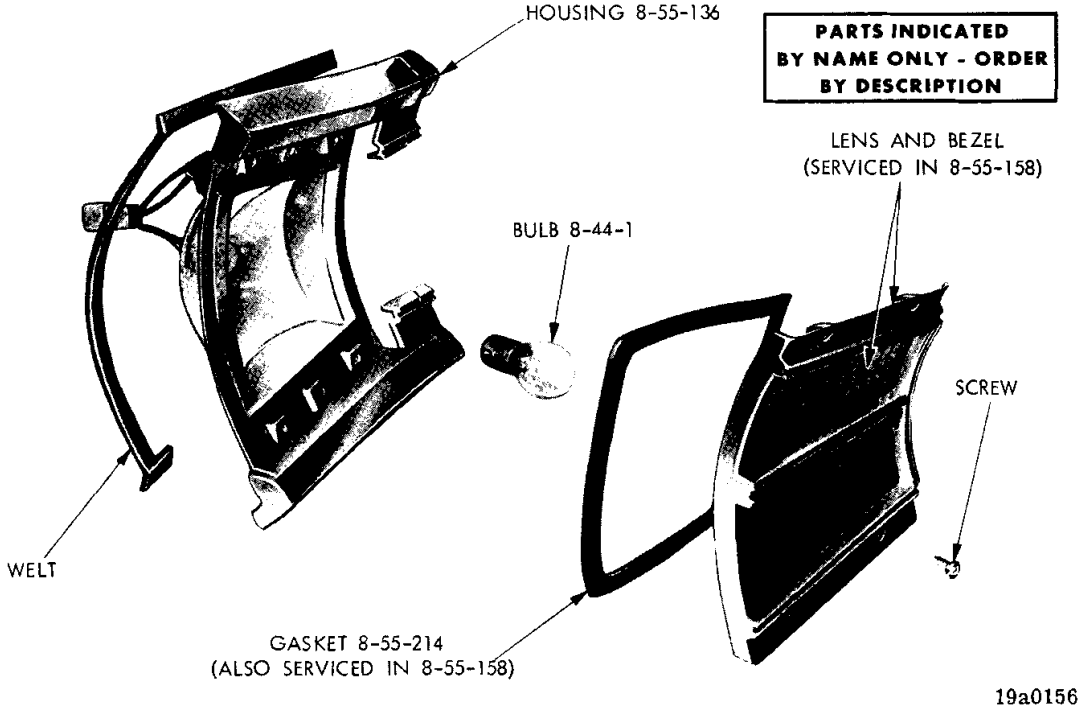

TAIL LAMP - DODGE (STATION WAGON)

MyMopar.com

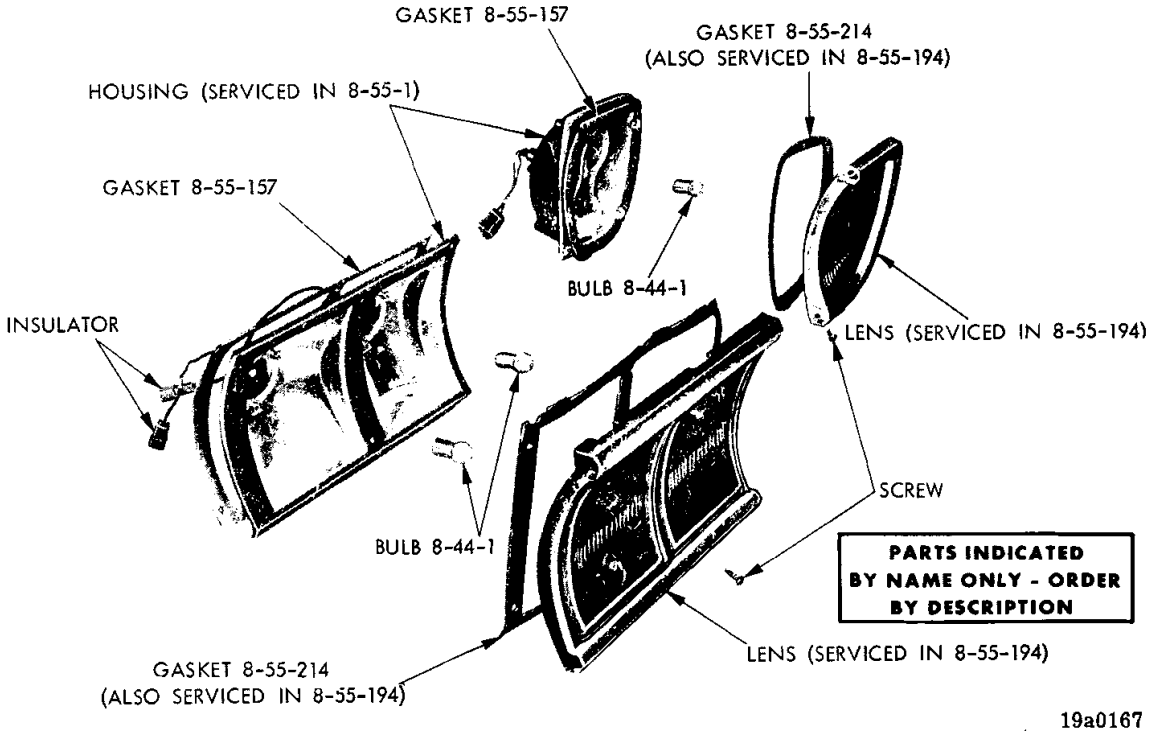

TAIL, STOP AND TURN SIGNAL LAMP -
CHRYSLER L (STATION WAGON)

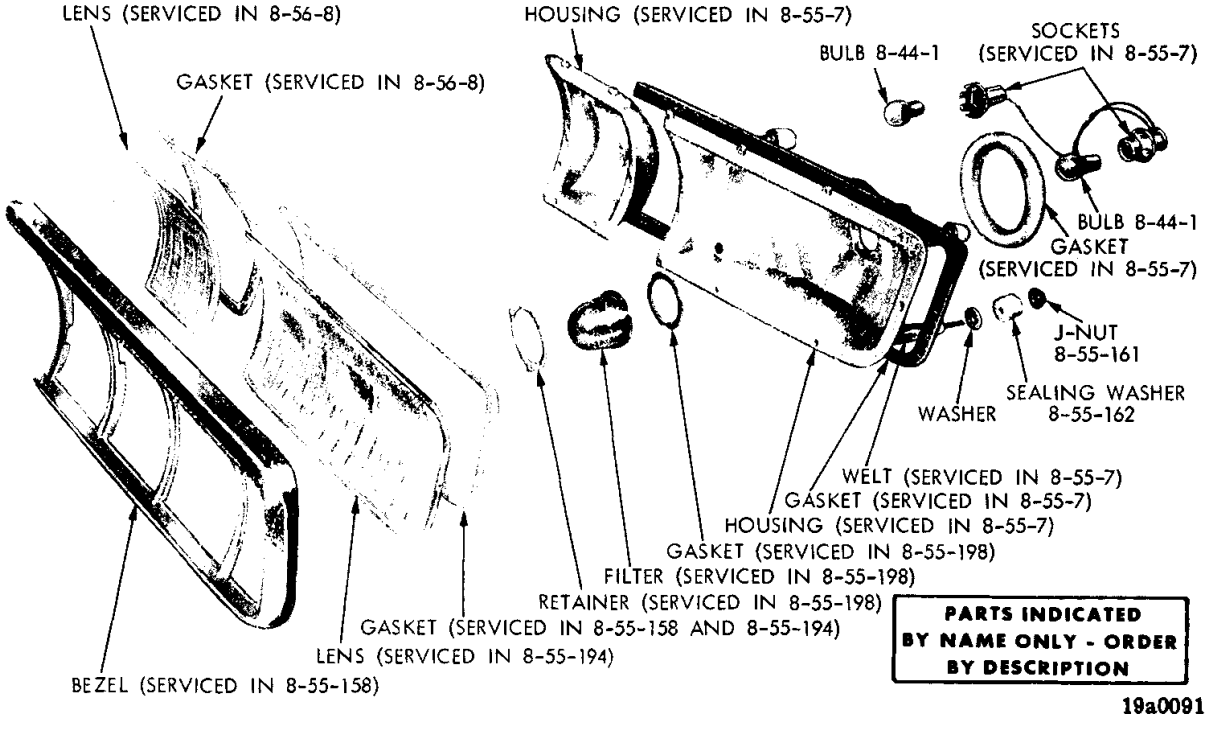

TAIL, STOP, TURN SIGNAL AND BACK-UP LAMP -
CHRYSLER C-H (EXCEPT STATION WAGON)

MyMopar.com

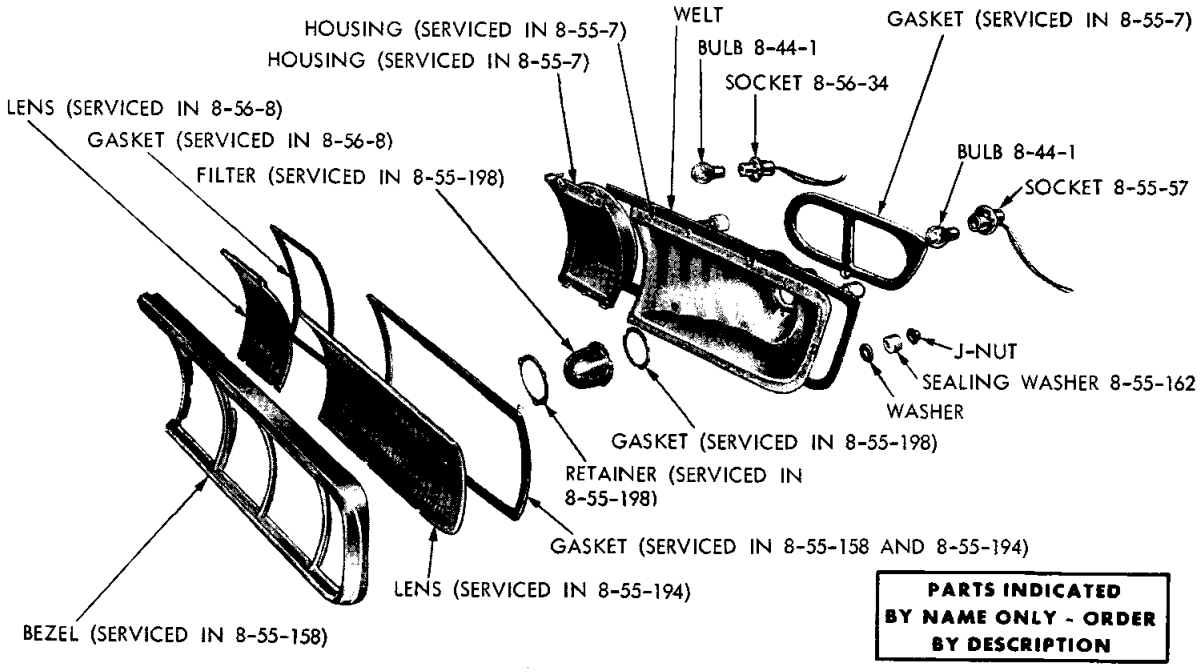

TAIL, STOP, TURN SIGNAL AND BACK-UP LAMP - CHRYSLER H (EXCEPT STATION WAGON)

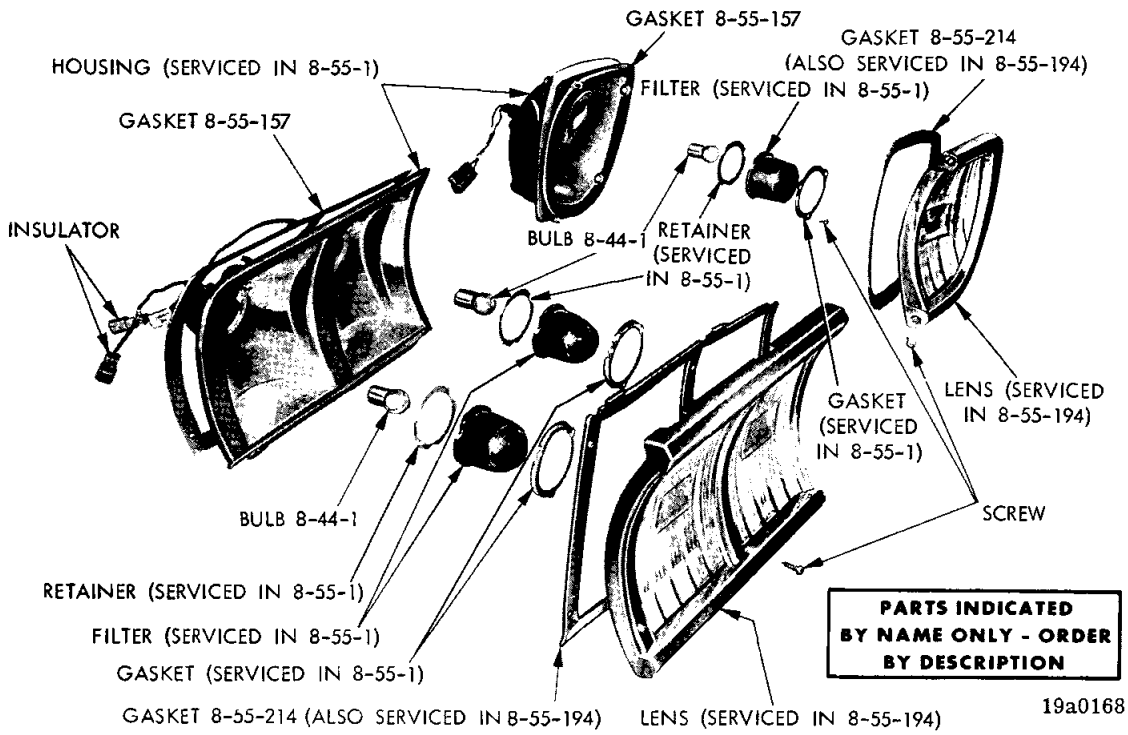

TAIL, STOP AND TURN SIGNAL LAMP - CHRYSLER H (STATION WAGON)

MyMopar.com

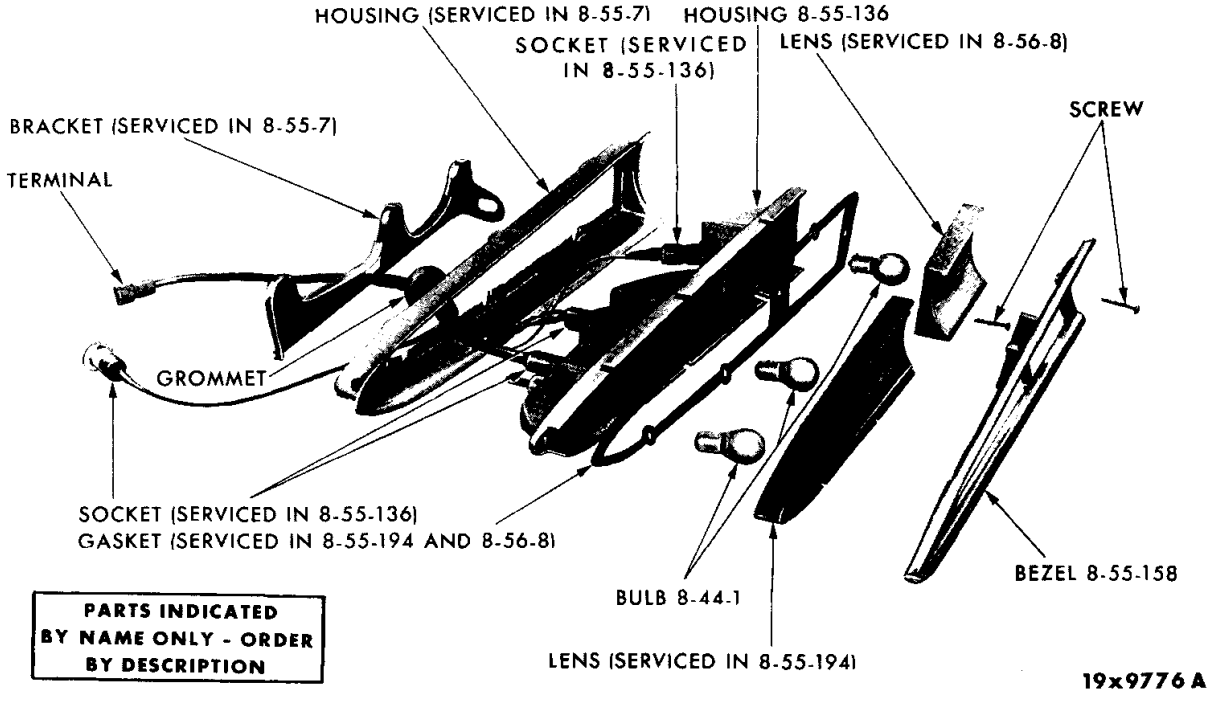

TAIL, STOP, TURN SIGNAL AND BACK-UP LAMP - IMPERIAL

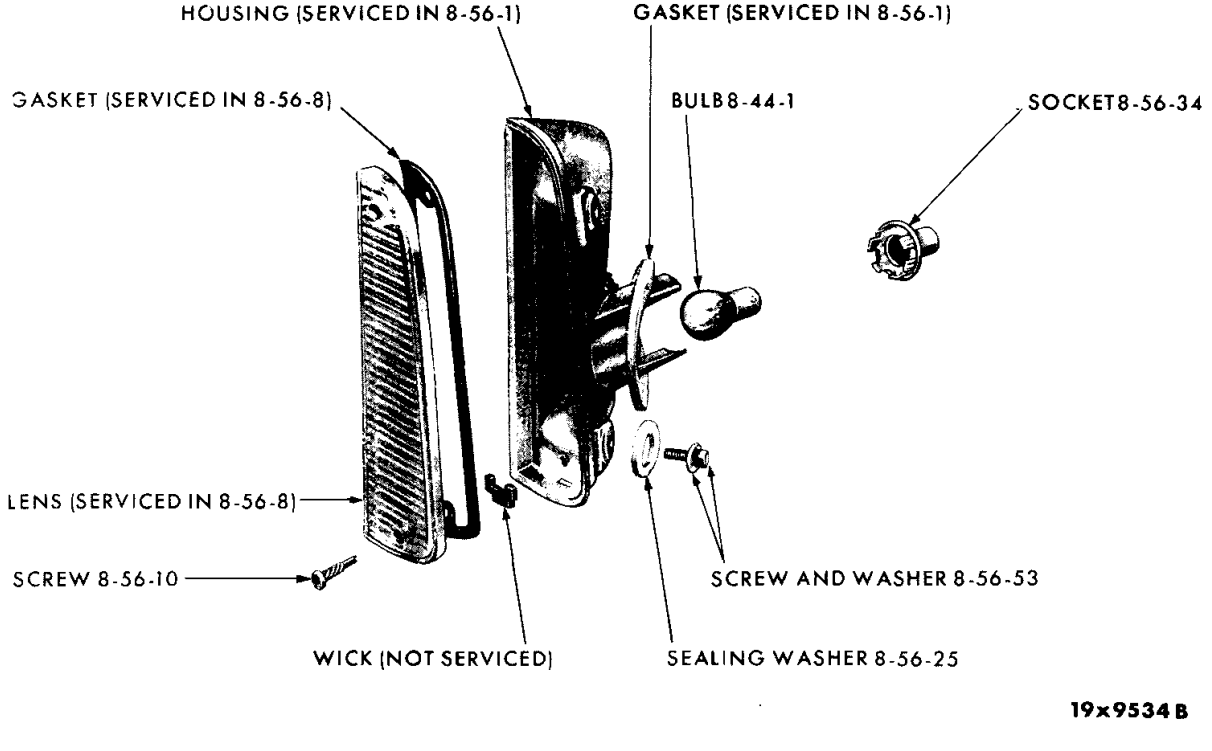

BACK-UP LAMP - BELVEDERE (EXCEPT STATION WAGON)

MyMopar.com

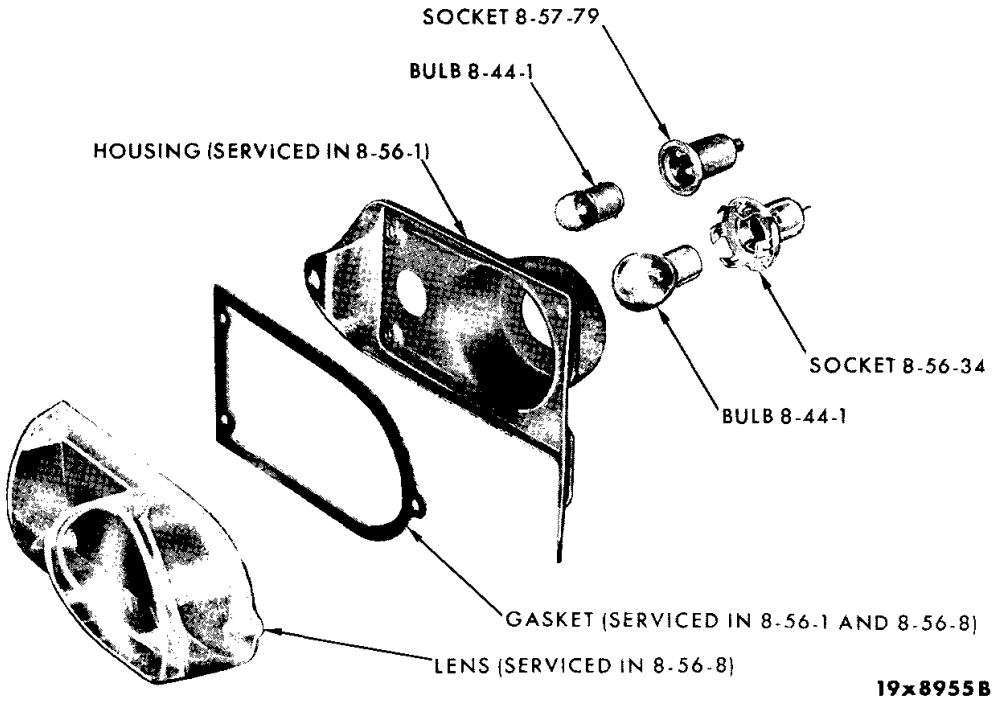

BACK-UP AND LICENSE LAMP - BELVEDERE AND CORONET (STATION WAGON)

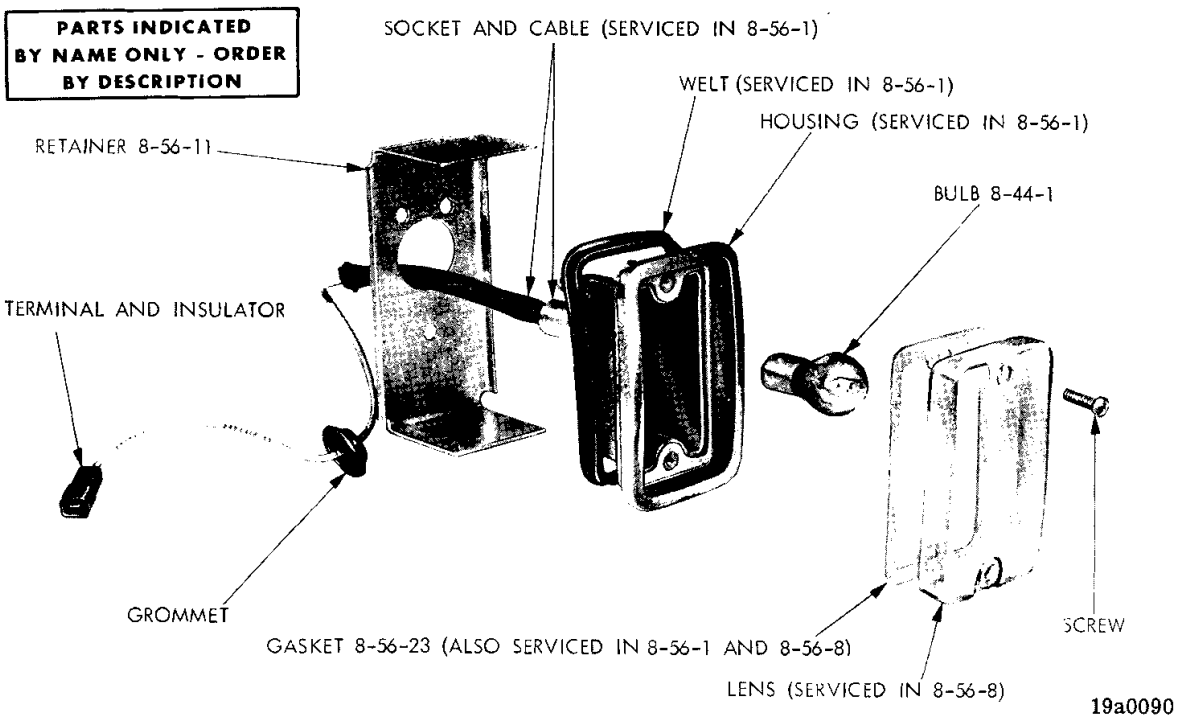

BACK-UP LAMP - DODGE (EXCEPT STATION WAGON)

MyMopar.com

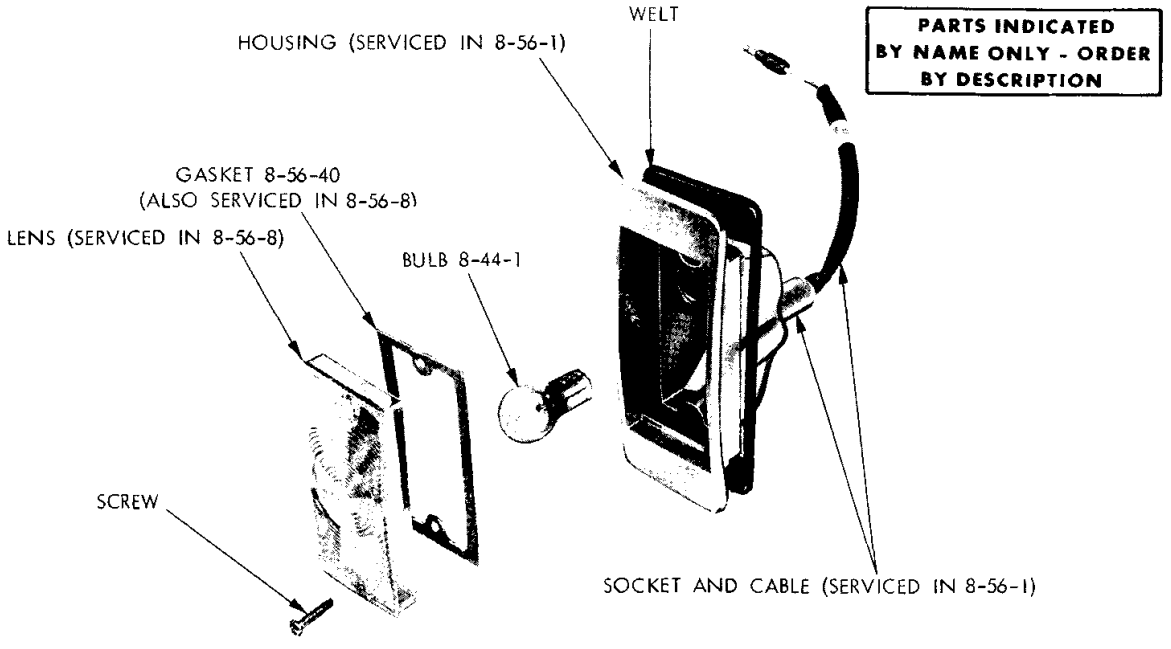

BACK-UP LAMP - PLYMOUTH, DODGE AND CHRYSLER (STATION WAGON)

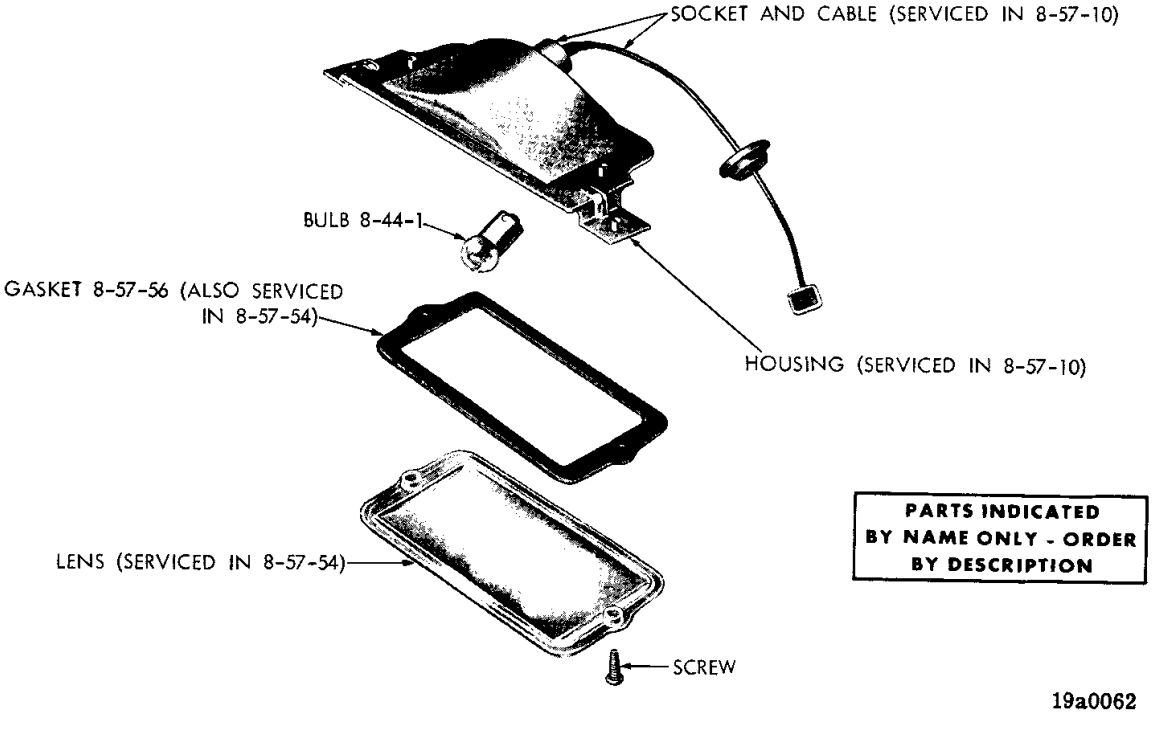

LICENSE LAMP - VALIANT AND DART

MyMopar.com

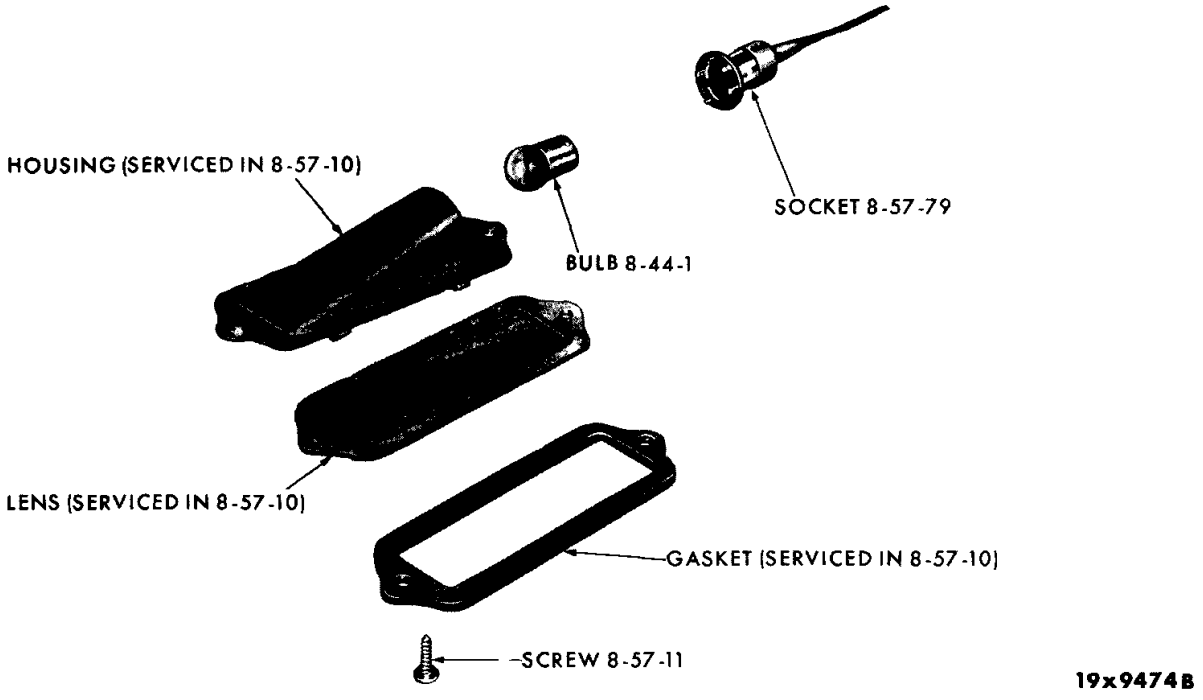

LICENSE LAMP - BELVEDERE (EXCEPT STATION WAGON)

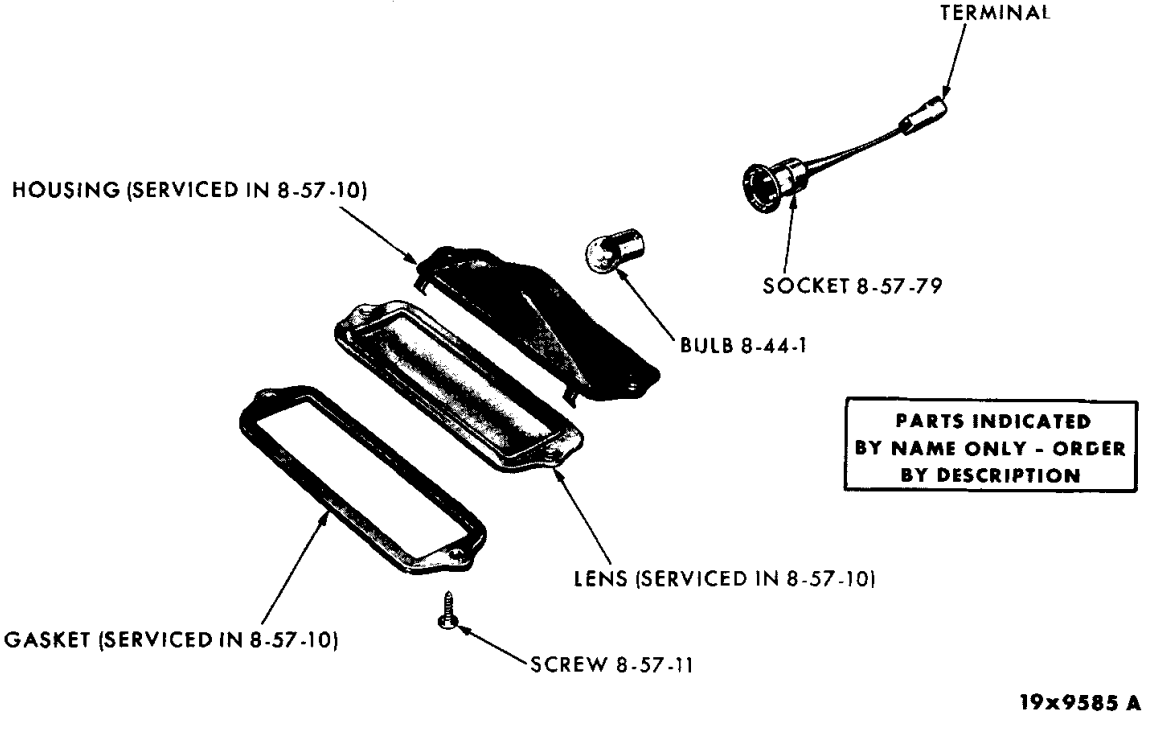

LICENSE LAMP - CORONET (EXCEPT STATION WAGON)

MyMopar.com

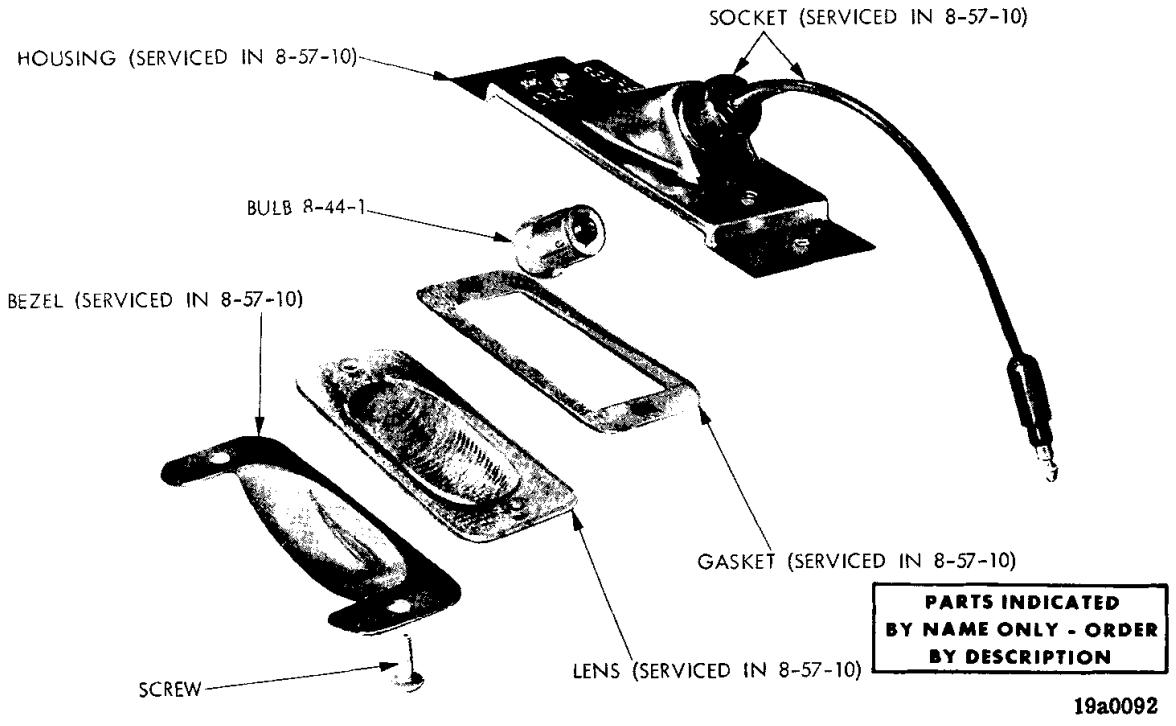

LICENSE LAMP - PLYMOUTH AND DODGE (EXCEPT STATION WAGON)

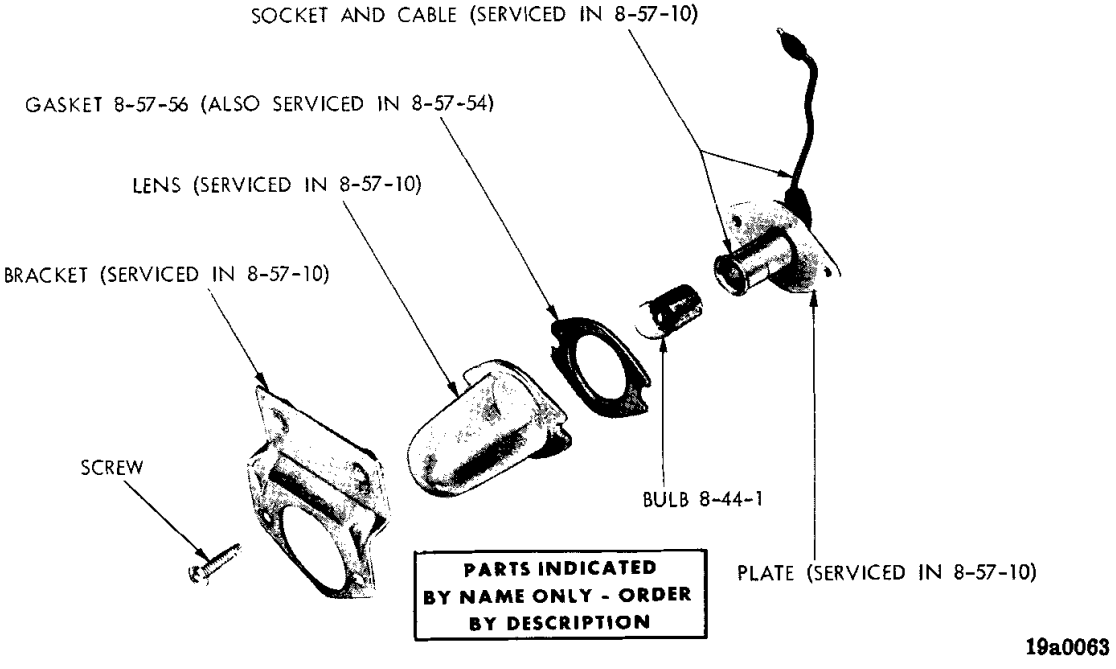

LICENSE LAMP - PLYMOUTH AND DODGE (STATION WAGON) AND CHRYSLER (ALL)

MyMopar.com

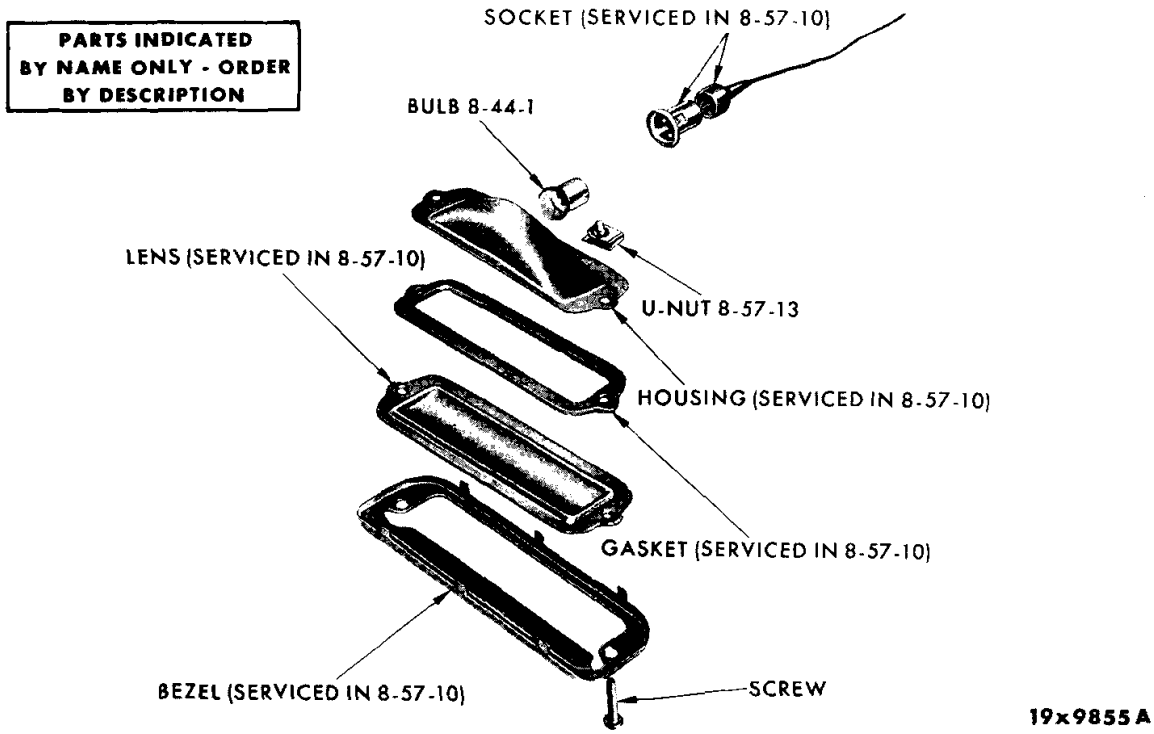

LICENSE LAMP - IMPERIAL

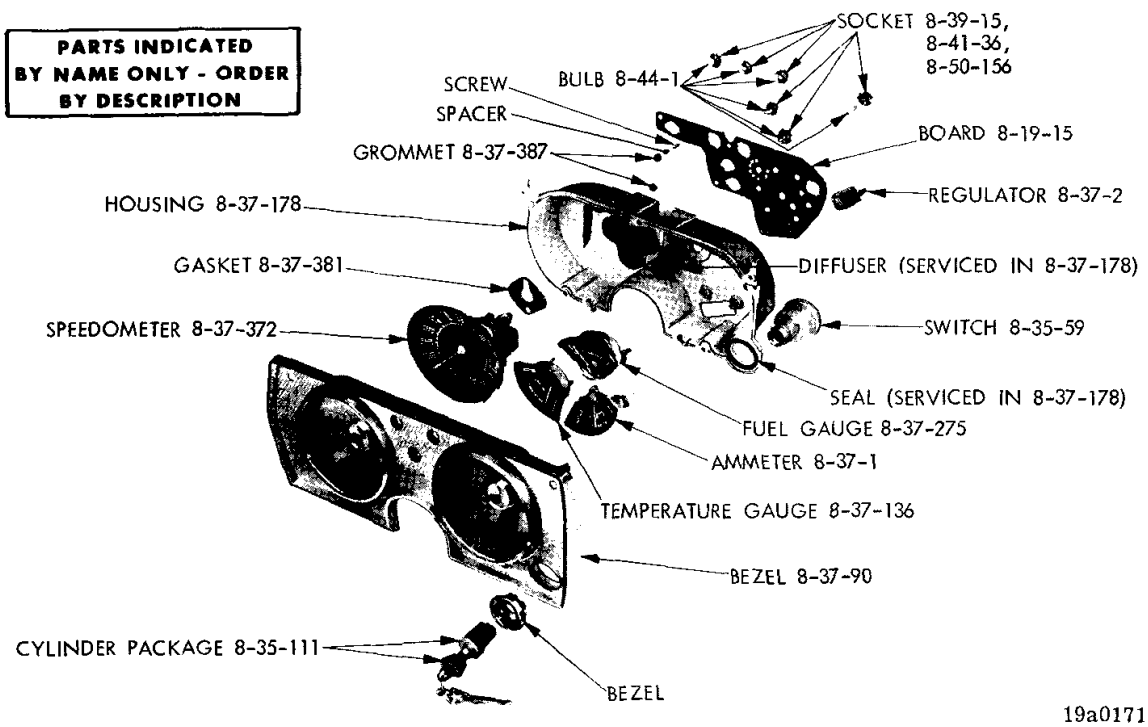

SPEEDOMETER AND INSTRUMENT CLUSTER - VALIANT

MyMopar.com

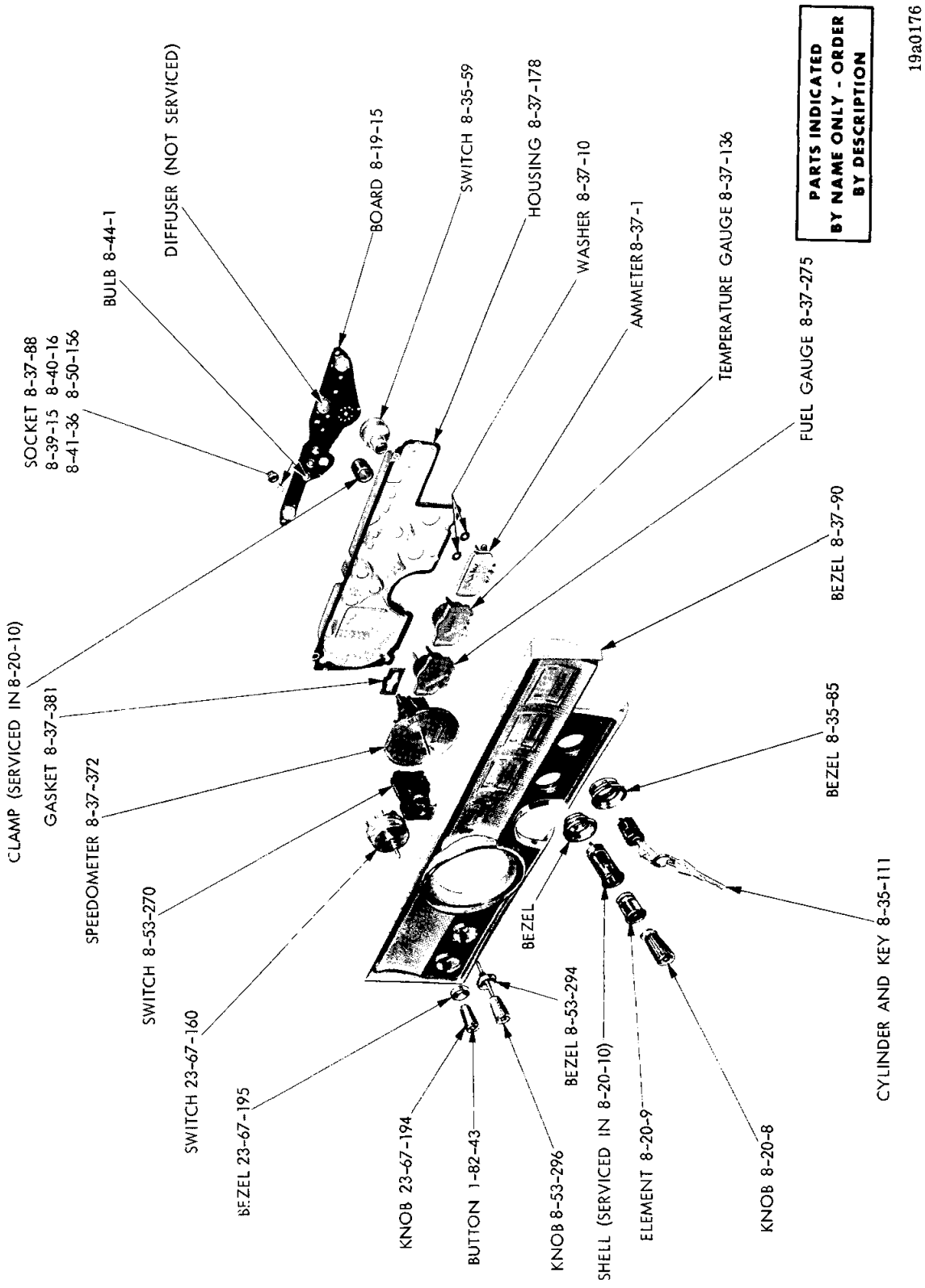

SPEEDOMETER AND INSTRUMENT CLUSTER - DART

MyMopar.com

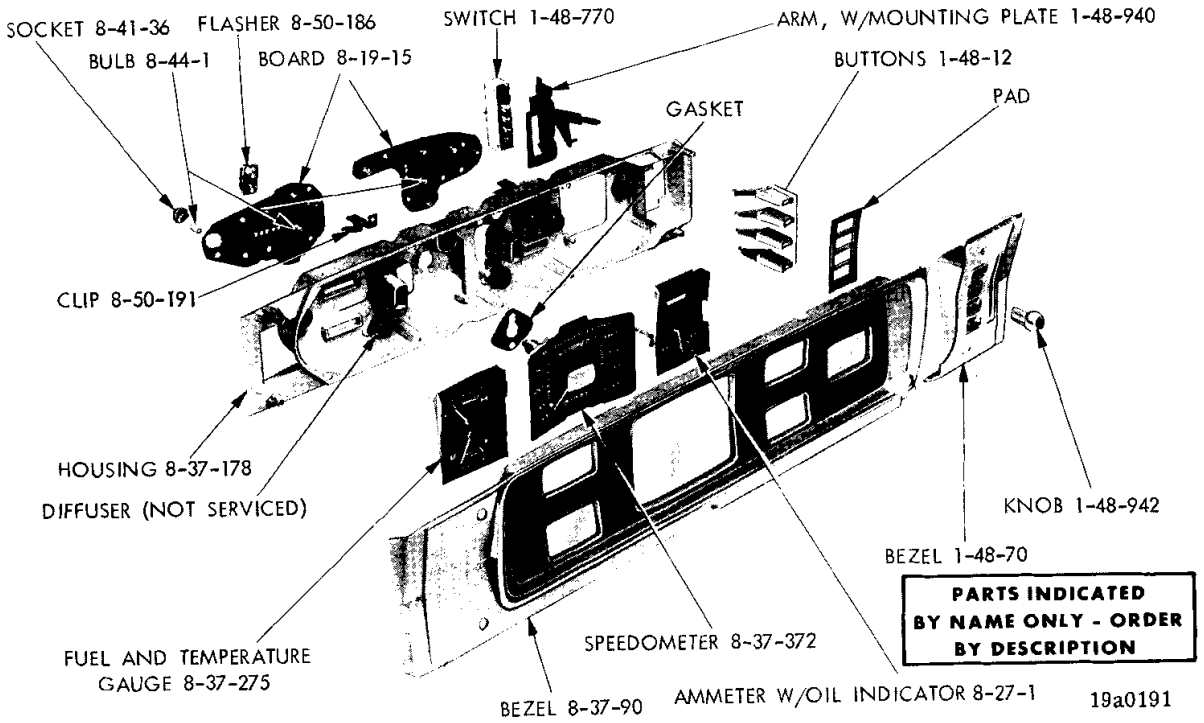

SPEEDOMETER AND INSTRUMENT CLUSTER - BELVEDERE

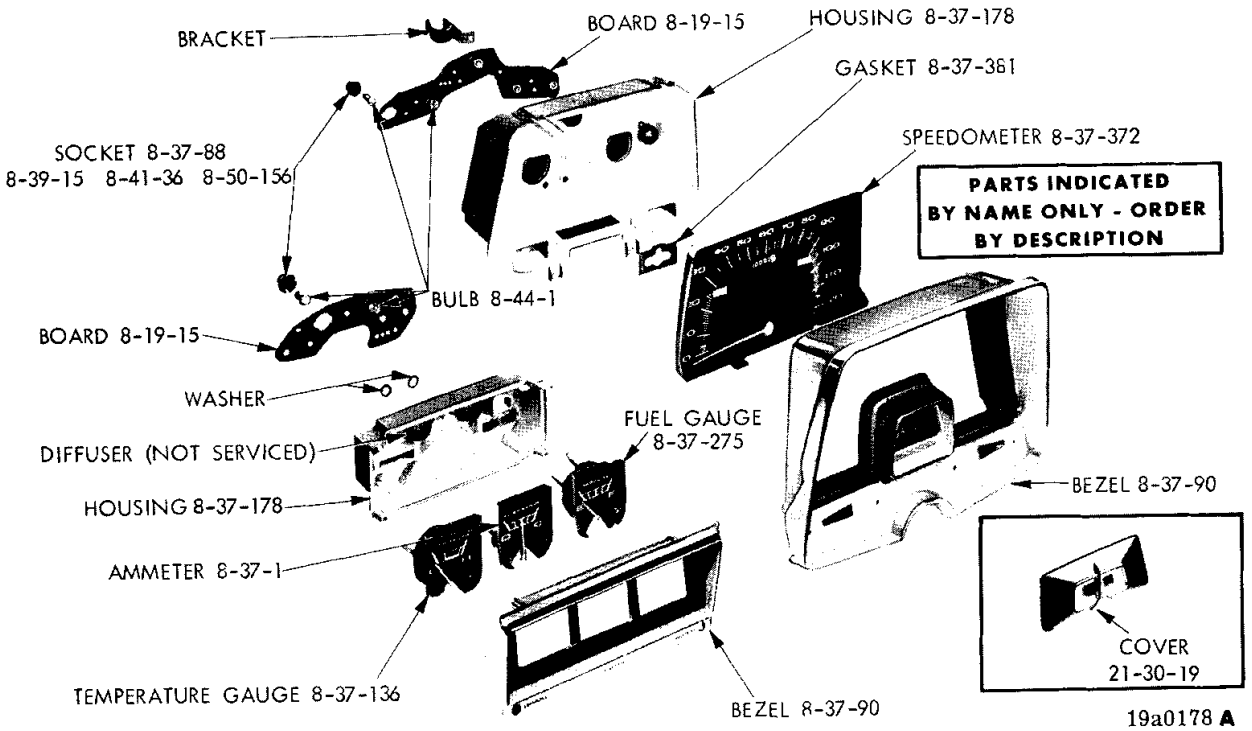

SPEEDOMETER AND INSTRUMENT CLUSTER - PLYMOUTH FURY

MyMopar.com

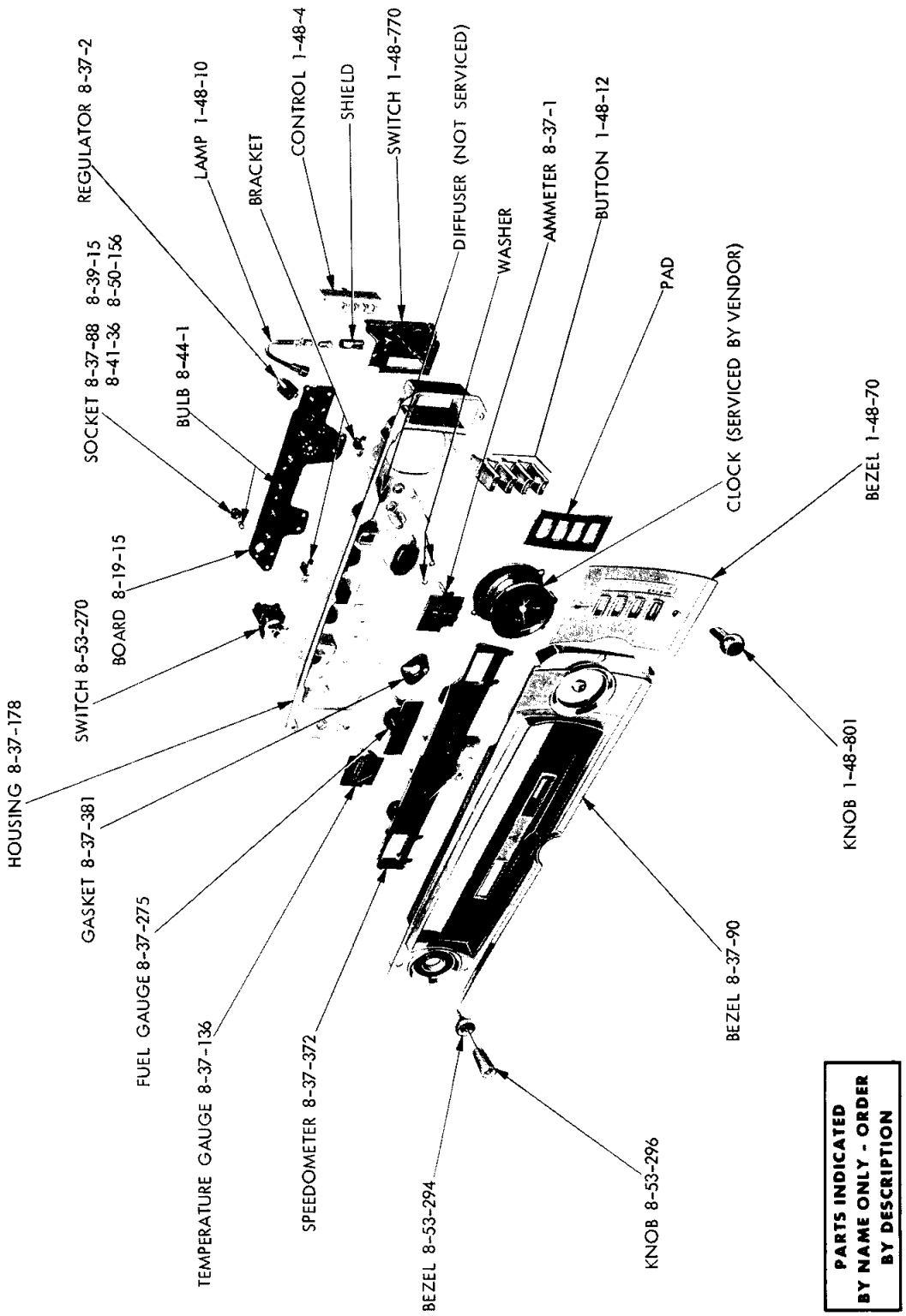

SPEEDOMETER AND INSTRUMENT CLUSTER - CORONET

MyMopar.com

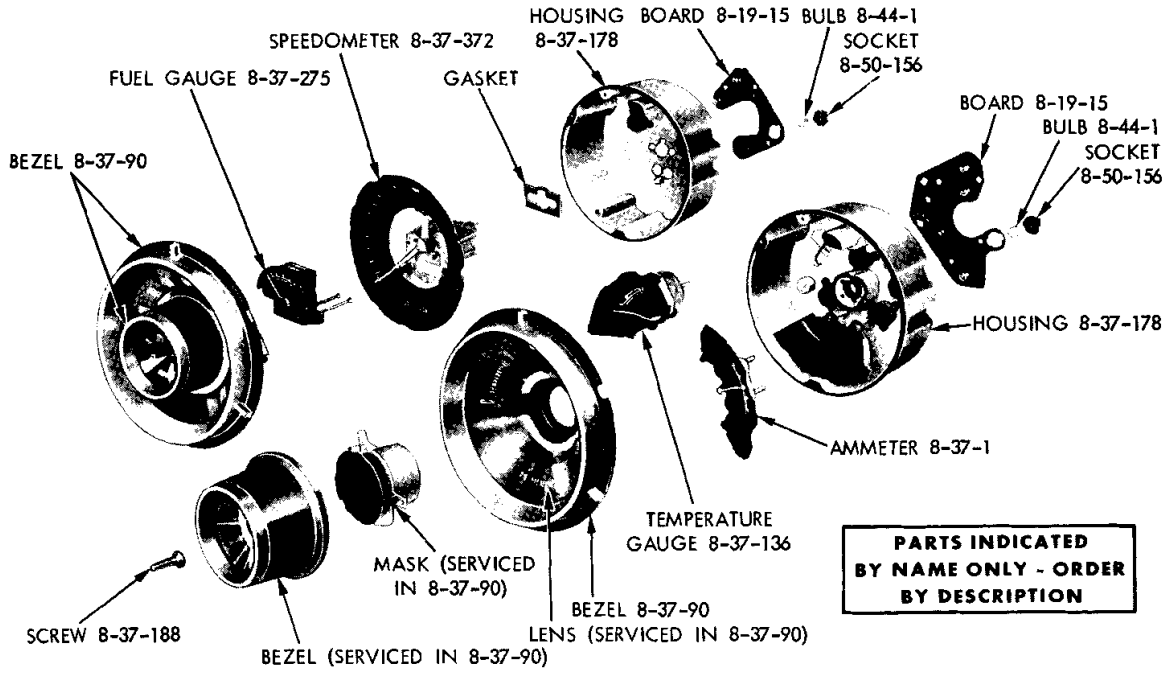

19a0238

INSTRUMENT CLUSTER - DODGE POLARA

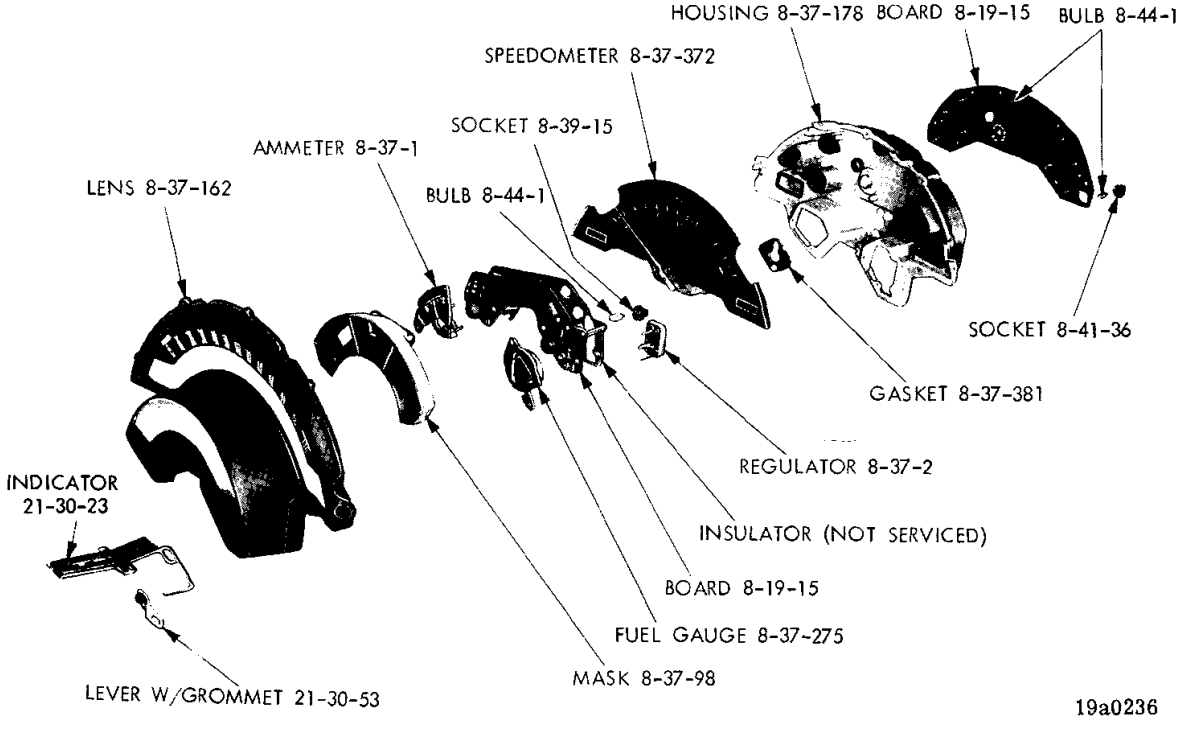

19a0236

INSTRUMENT CLUSTER - CHRYSLER

MyMopar.com

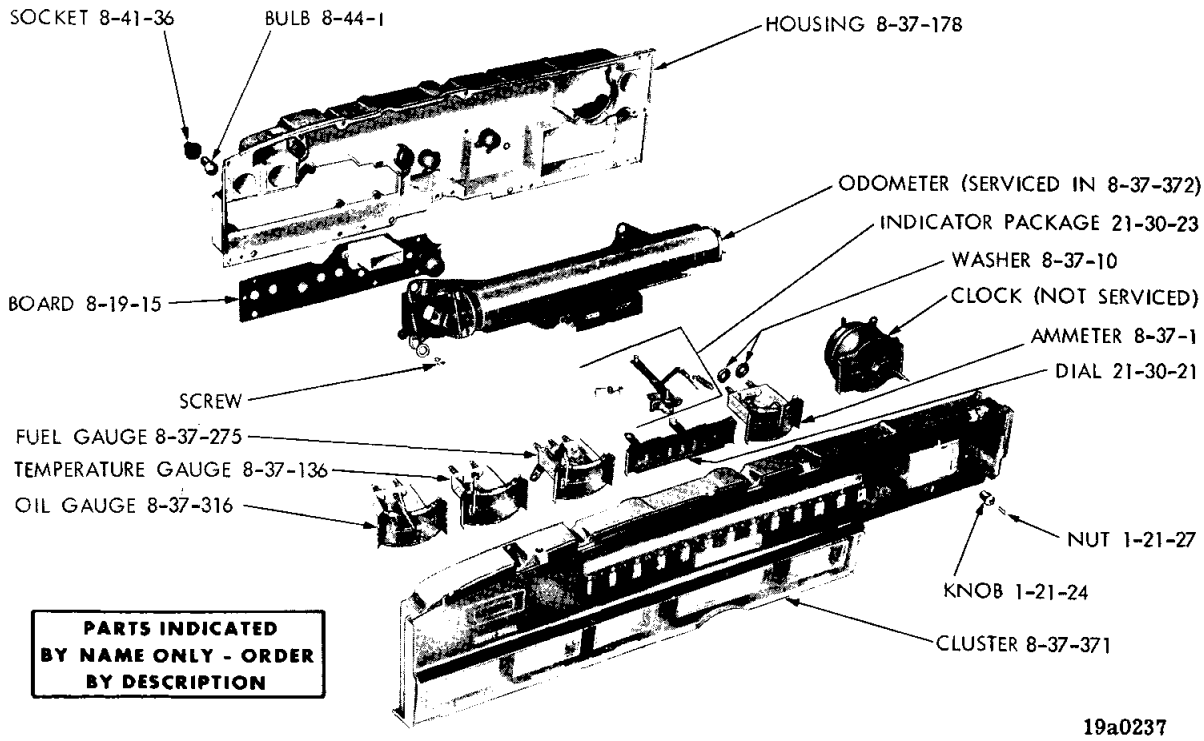

INSTRUMENT CLUSTER - IMPERIAL

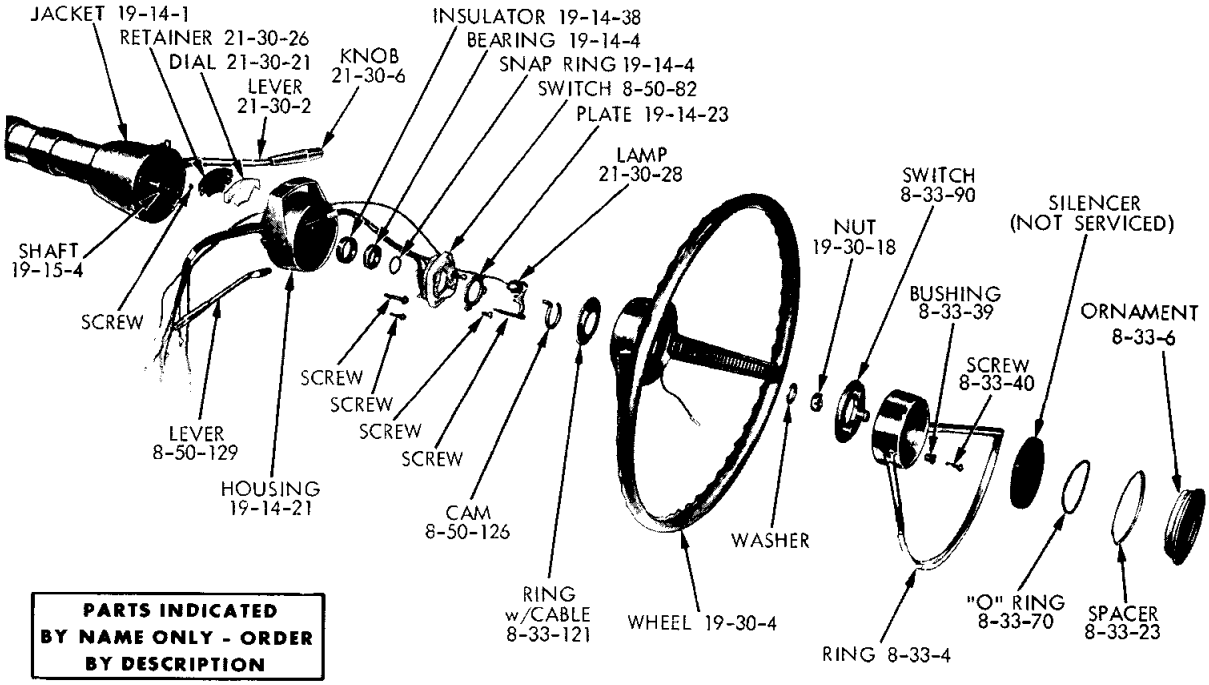

HORN AND TURN SIGNAL CONTROLS - VALIANT AND DART

MyMopar.com

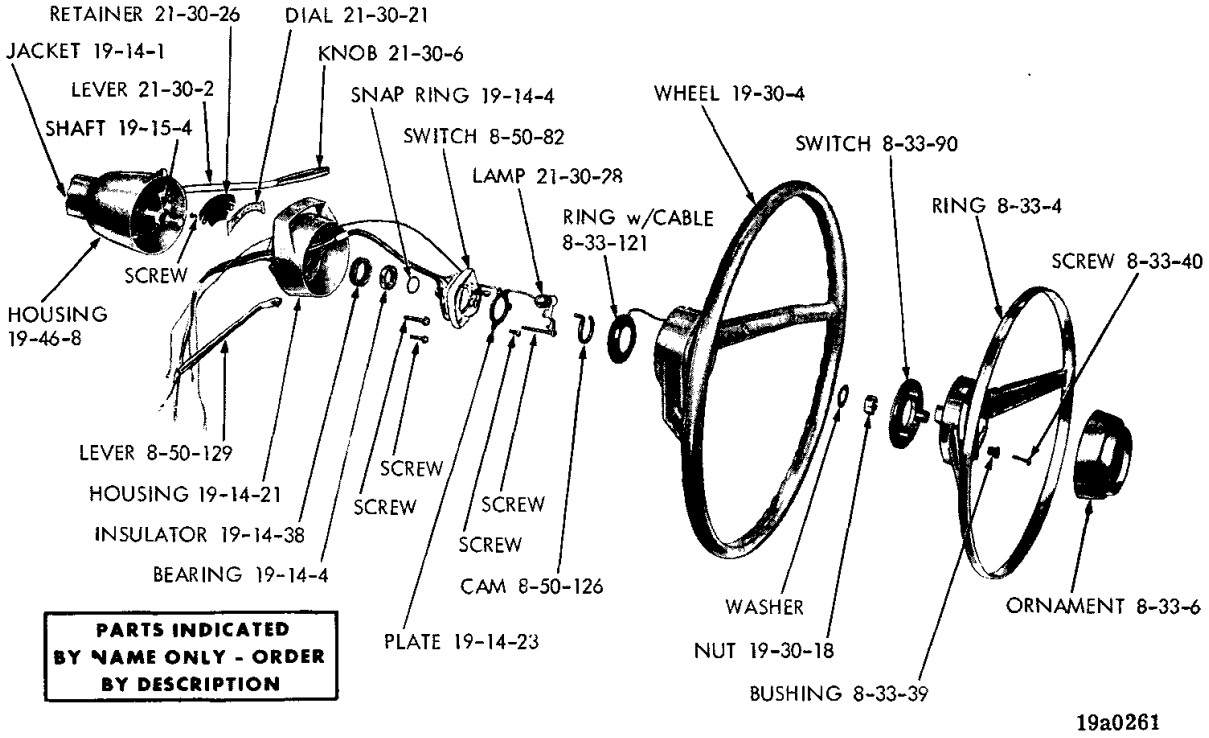

HORN AND TURN SIGNAL CONTROLS - BELVEDERE AND CORONET

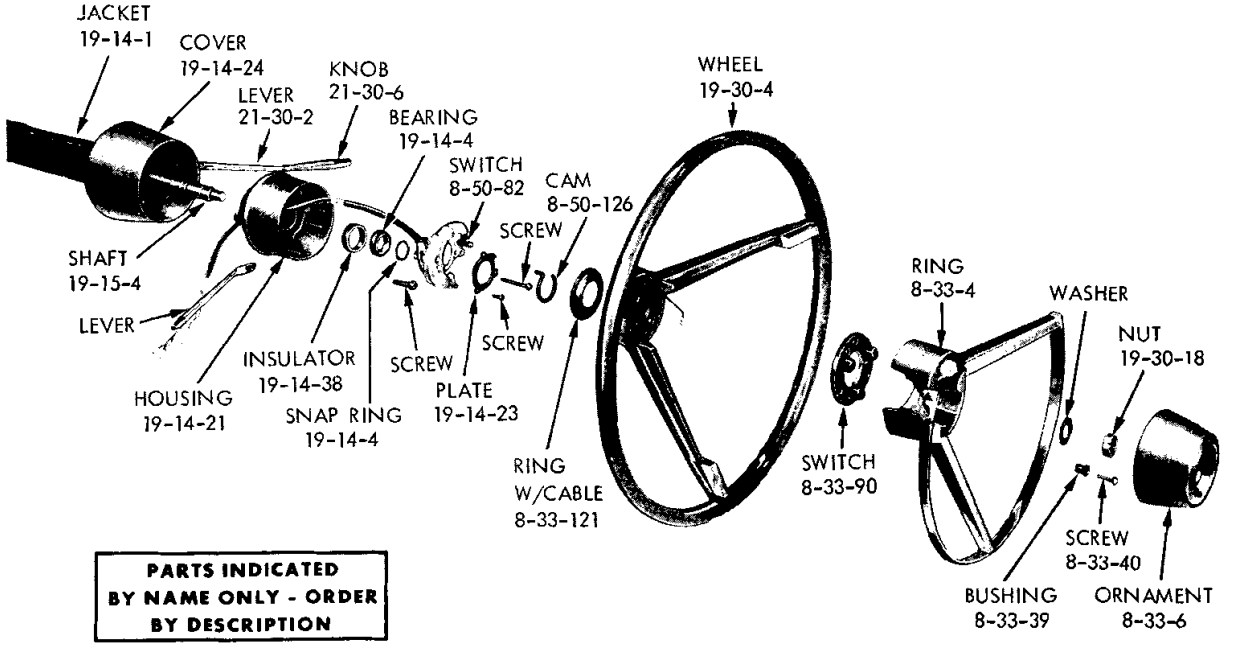

HORN AND TURN SIGNAL CONTROLS - PLYMOUTH FURY, DODGE POLARA AND CHRYSLER

MyMopar.com

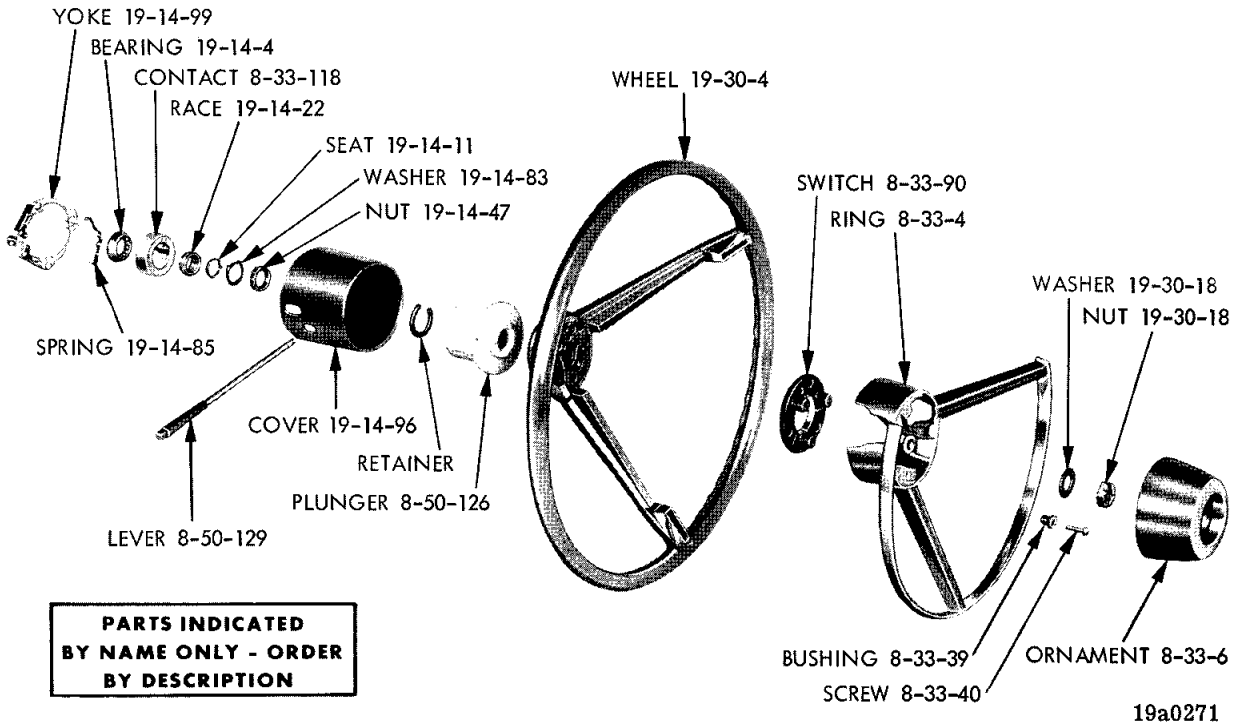

HORN AND TURN SIGNAL CONTROLS (TILT) - PLYMOUTH, DODGE AND CHRYSLER

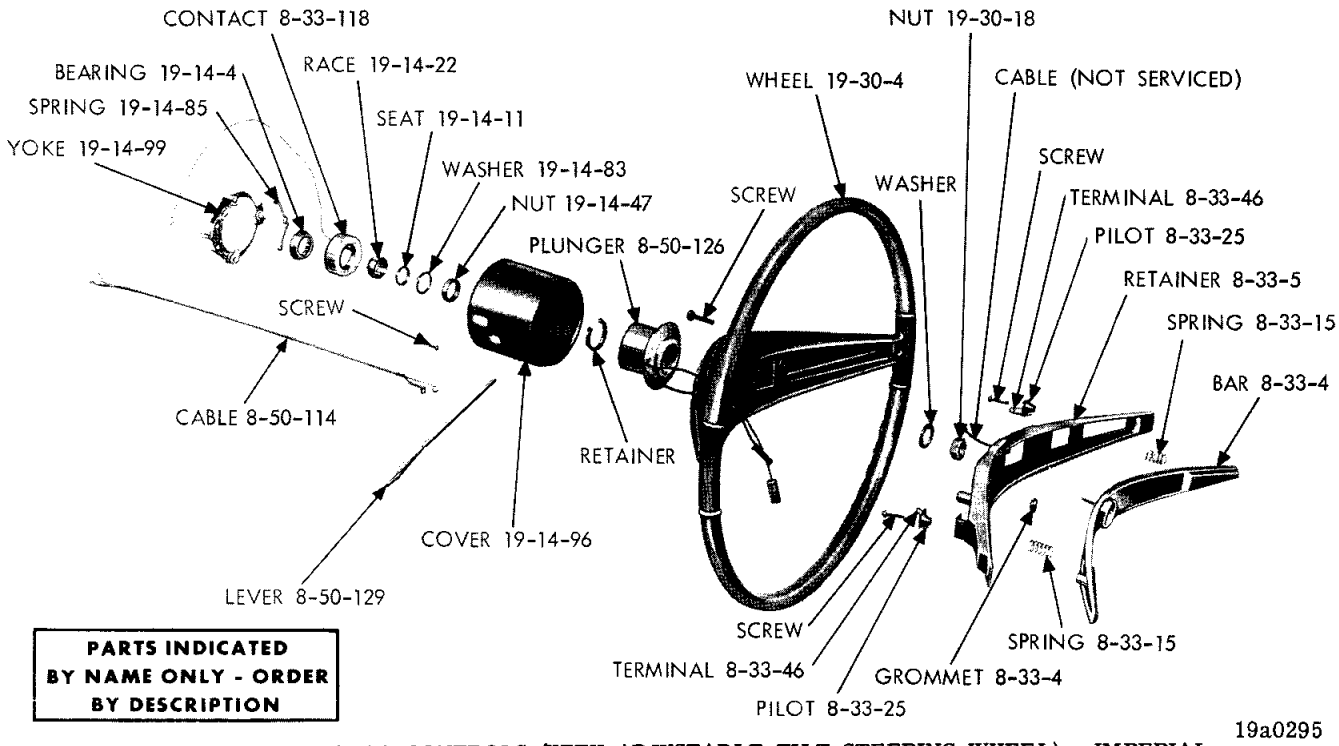

HORN AND TURN SIGNAL CONTROLS (WITH ADJUSTABLE TILT STEERING WHEEL) - IMPERIAL

MyMopar.com

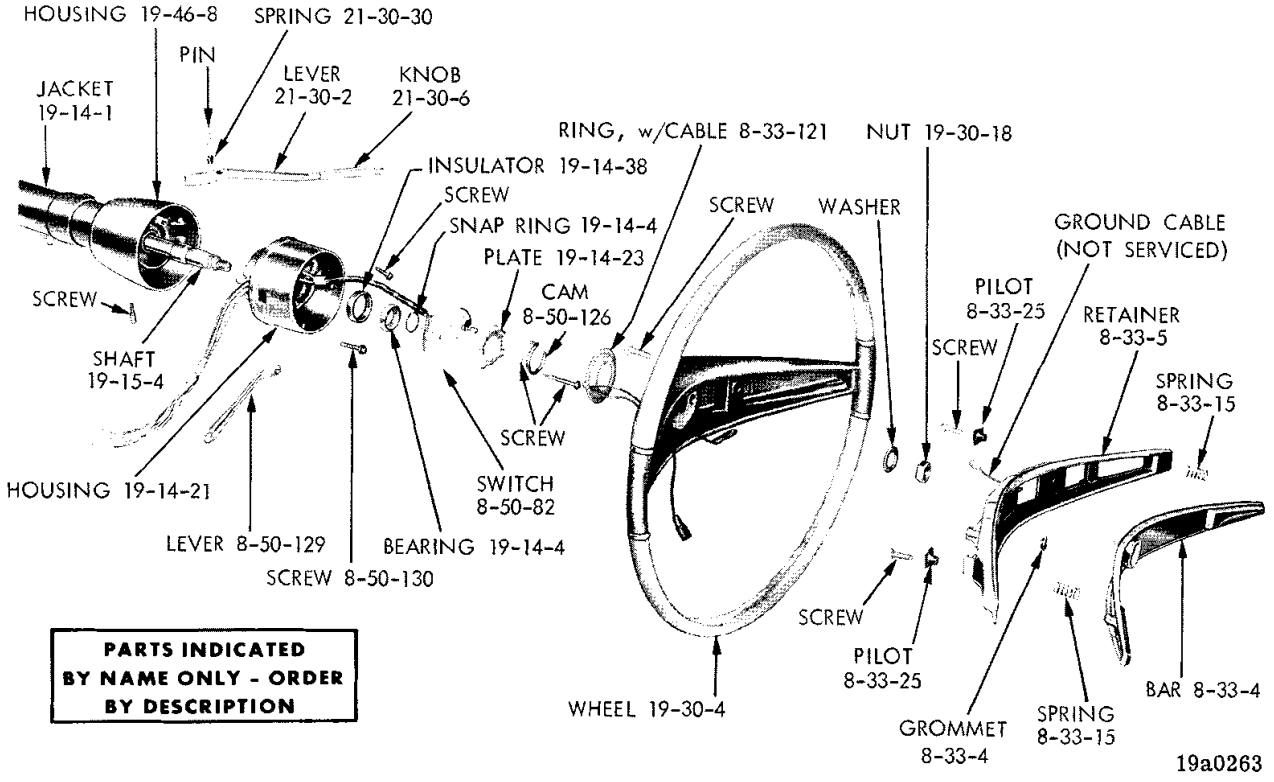

HORN AND TURN SIGNAL CONTROLS (WITHOUT ADJUSTABLE TILT STEERING WHEEL) - IMPERIAL

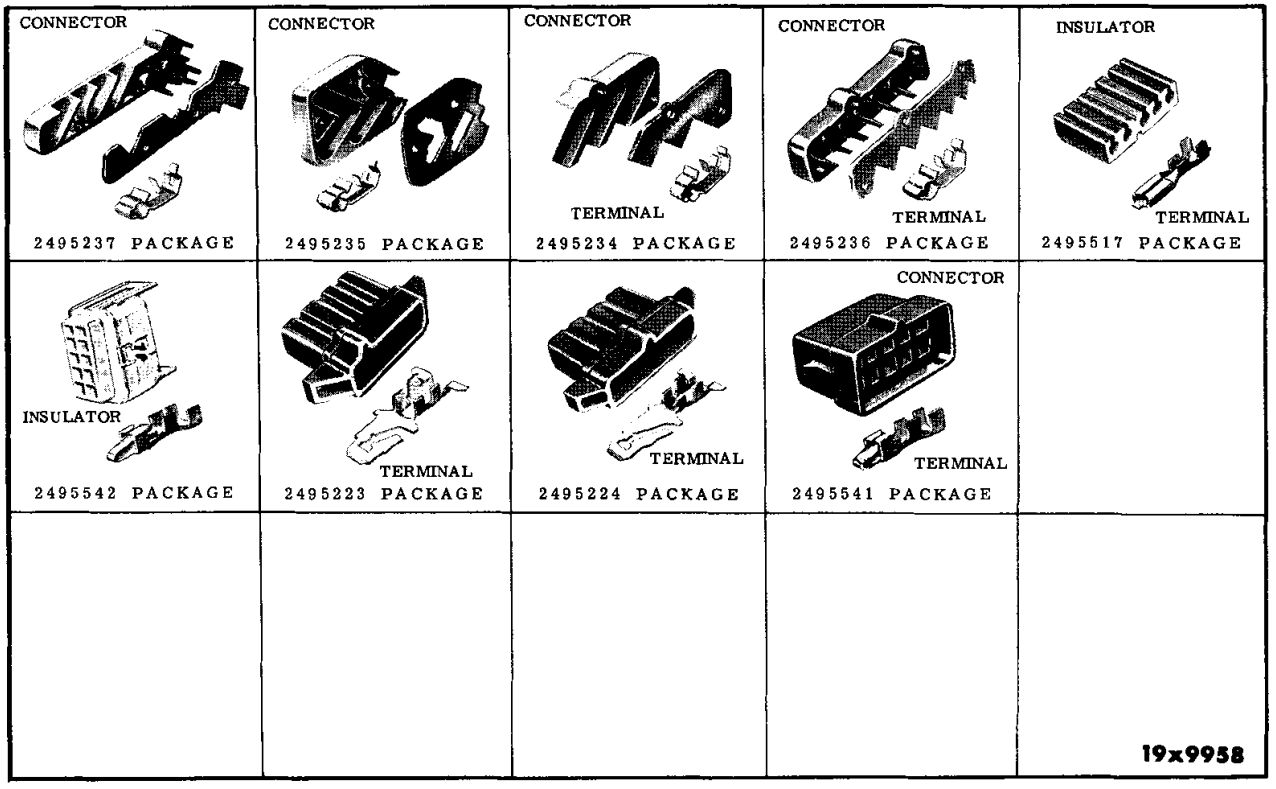

PLUG, TERMINAL, INSULATOR AND CONNECTOR CHART

MyMopar.com

CONNECTOR 1842003	CONNECTOR TERMINAL 1879609 PACKAGE	CONNECTOR 611898	TERMINAL 1842009	TERMINAL 2427736	TERMINAL 870821
TERMINAL 2291588	TERMINAL 221259	TERMINAL 1770660	TERMINAL 903895	TERMINAL (SILVER PLATED) 1819836 PACKAGE	TERMINAL 1779654 PACKAGE
TERMINAL 2258591	TERMINAL 2258118	TERMINAL 2290069	TERMINAL 2258590	TERMINAL 2290207	TERMINAL 2291838
TERMINAL (FEMALE) INSULATOR (FEMALE) TERMINAL (MALE) INSULATOR (MALE) 2298882 PACKAGE	INSULATOR 2291093	TERMINAL 2427545	INSULATOR 2258651	INSULATOR 2258102	INSULATOR TERMINAL 2240264 PACKAGE
INSULATOR TERMINAL 1843222 PACKAGE	INSULATOR TERMINAL 2240536 PACKAGE	INSULATOR TERMINAL 2084421 PACKAGE	INSULATOR TERMINAL 2084424 PACKAGE	INSULATOR TERMINAL 2084425 PACKAGE	INSULATOR TERMINAL (FEMALE) TERMINAL (MALE) 1843226 PACKAGE
TERMINAL 2427725	TERMINAL 2427848	INSULATOR TERMINAL TERMINAL 2448822 PACKAGE	TERMINAL 2257443-4	INSULATOR TERMINAL 2495239 PACKAGE	TERMINAL 2496541

19x9957

PLUG, TERMINAL, INSULATOR AND CONNECTOR CHART

MyMopar.com

MOPAR BATTERIES

- Longer Battery Life
- Greater Power
- Instant Power Under All Weather Extremes
- Dependable Power
- Economical Power

MODELS	GROUP NUMBER 20H	24H	27H
Valiant and Dart	Standard	Optional	
Plymouth and Dodge		Standard	Optional
Chrysler - All			Standard
Imperial			All

BATTERY TYPE	AABM GROUP NUMBER	PART NUMBERS WET CHARGED	DRY CHARGED	PLATES PER CELL	AMP HOURS
"SUPREME" 48 Months Pro-Rata Service Adjustment Super Performance	24H 27H	2098 029 2098 039	2098 030 2098 040	11 13	60 70
"DELUXE" 36 Months Pro-Rata Service Adjustment Valued Dependability	20H 24H 24H 27H	2098 447 2098 041 2098 795 2098 051	2098 448 2098 042 2098 796 2098 052	7 9 11 13	38 48 59 70
"CUSTOM" 24 Months Pro-Rata Service Adjustment Popular Priced Dependability	24H	2098 797	2098 798	7	41
"SPECIAL" 12 Months Pro-Rata Service Adjustment Economical Quality	24H	2098 053	---- ---	7	35

FOR COMPLETE PAST MODEL APPLICATION AND FOR OTHER MAKE VEHICLES SEE MOPAR BATTERY PRICE AND APPLICATION GUIDE

19x9571

MyMopar.com

CODE	PART NAME AND DESCRIPTION	CYL	PER CAR	VALIANT / DART	PLYMOUTH BELVEDERE / DODGE CORONET	PLYMOUTH FURY / DODGE POLARA / CHRYSLER	IMPERIAL
8-01-0	**BATTERY AND CABLE**						
8-01-4	CABLE, Battery Ground, No. 6 Gauge, 28" long		1	2525 348	2525 348	2525 348	2525 348
	Trunk Battery, w/426 cu. in. Eng., except Sta. Wgn., 32" long	8	1	---- ---	1879 939		
	GROMMET, Battery Cable, Trunk Battery, w/426 cu. in. Eng., except Sta. Wgn.	8	1	---- ---	1370 460		
8-01-7	STRAP, Battery Ground Cable, Battery Tray.		1	6015 149			
		6	1	---- ---	6015 149		
	CLIP, Battery Cable Left Side Rail Front Reinforcement, w/Auto. Trans.		1	---- ---	6015 366		
	CLIP, Starting Motor to Starter Relay Wiring Left Side Rail Front Reinforcement	6	1	---- ---	6015 366		
8-01-10	WASHER, Intake Manifold Ground Cable	8	2	---- ---	⊟6026 273	⊟6026 273	⊟6026 273
8-01-11	BOLT, Battery Ground Cable Clamp		★	1622 535	1622 535	1622 535	1622 535
8-01-12	NUT, Battery Ground Cable Clamp Bolt		★	1622 536	1622 536	1622 536	1622 536
8-01-13	SCREW, Battery Cable Ground, except Sta. Wgn., w/426 cu. in. Eng.	8	2	---- ---	6006 120		
8-01-17	CABLE, Battery to Starter, No. 6 Gauge, 28" long	6	1	2525 348			
	Battery to Starter and Starter Relay	6	1	2587 817			
		8	1	*2587 178	*2587 822		
	w/Manual Trans., except Taxi	6	1	---- ---	*2587 820		
	w/Auto. Trans.	6	1	---- ---	*2587 822	*2631 001	
	w/Manual Trans., 11" Clutch, Taxi	6	1	---- ---	*2587 822	*2631 001	
	Engine to Body Ground, except Sta. Wgn., w/426 cu. in. Eng., Hemispherical	8	1	---- ---	2427 807		
	Starter Motor to Battery Cable, Trunk Battery, except Sta. Wgn., w/426 cu. in. Eng., Hemispherical	8	1	---- ---	2580 470		
	Battery to Starter to Starter Relay, w/273 cu. in. Eng.	8	1	---- ---	2587 178		
			1	---- ---	---- ---	*2631 001	*2587 822
	Police and Taxi	6	1	---- ---	---- ---	*2631 001	
8-01-20	BOLT, Battery to Starter Cable Clamp		★	*1622 535	*1622 535	*1622 535	*1622 535
8-01-21	NUT, Battery to Starter Cable Clamp Bolt		★	*1622 536	*1622 536	*1622 536	*1622 536
8-05-0	**DOME LAMP AND SWITCH**						
8-05-6	HOUSING, 2 D., 2 D. H.T., 4 D. and Sta. Wgn.		1	2292 994			
	2 D. and 4 D.		1	---- ---	2419 236		
	Sta. Wgn.		1	---- ---	2292 871		
	Rear, Sta. Wgn.		1	---- ---	2161 308	2161 308	
	2 D., 4 D., 4 D. H.T. and Sta. Wgn., P		1	---- ---	---- ---	2490 012	
	4 D. and Sta. Wgn., D, C	8	1	---- ---	---- ---	2490 012	
	HOUSING and SEAL PACKAGE, Reading Lamp, 4 D. H.T., Y-H		1	---- ---	---- ---	---- ---	2448 807
	SCREW		2	6024 402			

TYPE LETTERS Indicate: V - Valiant, L - Dart, R - Belvedere, W - Coronet, P - Plymouth, D - Dodge, C - Chrysler, Y - Imperial

★Indicates use as required. Numerals in parentheses ( ) refer to notes. Printed in U.S.A.

⊟Indicates parts not listed in any previous parts book. Prices and specifications subject to change without notice.

• Indicates change or addition. March 1966 Supersedes May 1965.

MyMopar.com

CODE	PART NAME AND DESCRIPTION	CYL	PER CAR	VALIANT / DART	PLYMOUTH BELVEDERE / DODGE CORONET	PLYMOUTH FURY / DODGE POLARA / CHRYSLER	IMPERIAL
8-05-0	**DOME LAMP AND SWITCH - Cont'd**						
8-05-8	BEZEL, Dome Lamp, 2 D., 4 D. and Sta. Wgn.		1	---- ---	2166 743		
	BEZEL and LENS, Rear, Sta. Wgn.		1	---- ---	2161 307	2161 307	
8-05-10	GASKET, Rear, Sta. Wgn.		1	---- ---	2589 097	2589 097	
8-05-11	RETAINER, Dome Lamp Switch Mounting, V, R, C		1	1887 604	1887 604	2496 766	2496 825
	Reading Lamp Housing, 4 D. H.T., Y-H . . .		2	---- ---	---- ---	---- ---	2440 873
8-05-12	SOCKET, Dome Lamp, 2 D., 2 D. H.T., 4 D. and Sta. Wgn.		1	1704 875			
	2 D., 4 D. and Sta. Wgn., P1		1	---- ---	2258 598	1704 875	
	2 D., 4 D., 4 D. H.T. and Sta. Wgn., P . . .	8	1	---- ---	---- ---	1704 875	
	4 D. and Sta. Wgn., D, C	8	1	---- ---	---- ---	1704 875	
	Reading Lamp, 4 D. H.T., Y-H		2	---- ---	---- ---	---- ---	1704 875
8-05-14	SWITCH, Dome Lamp, R		1	2584 926	2584 927	2584 928	2584 929
	W-L, W-H		1	---- ---	2298 855		
	W-P	8	1	---- ---	2497 778		
	Reading Lamp, 4 D. H.T., Y-H		2	---- ---	---- ---	---- ---	2427 335
	Roof Rail Dome Lamp, 2 D. H.T. and 4 D. H.T.		1	---- ---	---- ---	---- ---	2096 180
8-05-16	KNOB, Dome Lamp Switch, L, W, P		1	2496 791	2580 149	2580 159	
	V, R		1	2497 271	2497 272		
	w/o Air Conditioning, D	8	1	---- ---	---- ---	2580 149	
	w/Air Conditioning, D	8	1	---- ---	---- ---	2580 150	
	C	8	1	---- ---	---- ---	2496 681	2426 656
	KNOB and SEAL PACKAGE, Reading Lamp, 4 D. H.T., Y-H		2	---- ---	---- ---	---- ---	2448 808
8-05-20	BEZEL, Switch Mounting, L, W, P		1	2497 249	2497 249	⊟2496 762	
	w/o Air Conditioning, D	8	1	---- ---	---- ---	2497 249	
	w/Air Conditioning, D	8	1	---- ---	---- ---	2580 146	
	C		1	---- ---	---- ---	*2497 620	
	Except Cv.Cp.		1	---- ---	---- ---	---- ---	2096 181
8-05-23	LENS, Dome Lamp, 2 D., 2 D. H.T., 4 D. and Sta. Wgn.		1	2292 995			
	2 D., 4 D. and Sta. Wgn.		1	---- ---	2166 676		
	2 D., 4 D., 4 D. H.T. and Sta. Wgn., P . . .		1	---- ---	---- ---	2490 013	
	4 D. and Sta. Wgn., D, C	8	1	---- ---	---- ---	2490 013	
	LENS and RETAINING RING PACKAGE, Reading Lamp, 4 D. H.T., Y-H		2	---- ---	---- ---	---- ---	2448 809
8-05-28	BRACKET, Dome Lamp Mounting, Rear, Sta. Wgn.		1	---- ---	2086 597	2086 597	
8-05-31	CONTACT, Dome Lamp Socket		★	2256 966	2256 966	2256 966	2256 966
	Reading Lamp, 4 D. H.T., Y-H		4	---- ---	---- ---	---- ---	2256 966
8-05-32	CORE, Dome Lamp Socket, Rear, Sta. Wgn. .		1	---- ---	2161 316	2161 316	
8-05-34	RETAINER, Dome Lamp Support Wire Long, 4 D., D, C	8	2	---- ---	---- ---	2581 275	
8-05-40	BUSHING and SPRING, Dome Lamp Socket, 2 D., 4 D. and Sta. Wgn.		1	---- ---	2096 062		

TYPE LETTERS Indicate: V - Valiant, L - Dart, R - Belvedere, W - Coronet, P - Plymouth, D - Dodge, C - Chrysler, Y - Imperial

★Indicates use as required. Numerals in parentheses ( ) refer to notes. Printed in U.S.A.

⊟Indicates parts not listed in any previous parts book. Prices and specifications subject to change without notice.

March 1966 Supersedes May 1965. * Indicates change or addition.

MyMopar.com

CODE	PART NAME AND DESCRIPTION	CYL	PER CAR	VALIANT / DART	PLYMOUTH BELVEDERE / DODGE CORONET	PLYMOUTH FURY / DODGE POLARA / CHRYSLER	IMPERIAL
8-11-0	**QUARTER OR COURTESY LAMP**						
8-11-5	PLATE, Attaching, Cv.Cp.		2	---- ---	2440 355		
8-11-6	SWITCH, Pocket Panel Lamp, Cv.Cp.		1	---- ---	---- ---	---- ---	2496 109
8-11-8	SOCKET, C Pillar Lamp, V Barracuda		2	1704 875			
	2 D. H.T., P		2	---- ---	1704 875	1704 875	
	2 D. H.T. and 4 D. H.T., D, C, Y-M	8	2	---- ---	---- ---	1704 875	1704 875
	Courtesy Lamp, Cv.Cp.		2	---- ---	1963 479		
	Console Courtesy Lamp, R-P, W-P, P-P, D-L 2 D. H.T. and Cv.Cp., D-P, C-L 2 D. H.T., C-M, C-P, C-H except Sta. Wgn.	8	2	---- ---	2426 141	2426 141	
	Pocket Panel Lamp, Cv.Cp.	8	2	---- ---	---- ---	1704 875	
	Quarter Arm Rest, Cv.Cp.		2	---- ---	---- ---	---- ---	1963 479
	Door Courtesy Lamp		4	---- ---	---- ---	---- ---	1704 875
8-11-12	LENS, Courtesy Lamp, 2 D. H. T., P, C-P		2	---- ---	2581 027	2581 027	
	V Barracuda		2	2581 027			
	2 D. H.T. and 4 D. H.T., D, C-L, C-M, C-H, Y-M	8	2	---- ---	---- ---	2581 027	2581 027
	Cv. Cp.	8	2	---- ---	---- ---	1887 954	
	LENS and RETAINER, Bezel, Cv.Cp.		2	---- ---	1623 132		
	LENS, Door Courtesy Lamp, 2 D. H.T., D-P	8	2	---- ---	---- ---	2572 775	
	LENS and RETAINER, Quarter Arm Rest, Cv.Cp.		2	---- ---	---- ---	---- ---	1623 132
	LENS, Door Pull Handle		2	---- ---	---- ---	---- ---	2490 164-5
8-11-15	HOUSING, Courtesy Lamp, 2 D. H. T., P		2	---- ---	2581 029	2581 029	
	V Barracuda		2	2581 029			
	Cv.Cp.	8	2	---- ---	---- ---	2581 709	
	2 D. H.T. and 4 D. H.T., D, C	8	2	---- ---	---- ---	2581 029	2581 029
	Door Courtesy Lamp, D-P	8	2	---- ---	---- ---	2572 774	
8-11-16	BEZEL, Courtesy Lamp, 2 D. H. T., P		2	---- ---	2581 028	2581 028	2499 012
	V Barracuda		2	2581 028			
	Cv.Cp.		2	---- ---	2499 012	---- ---	2499 012
	2 D. H.T. and 4 D. H.T., D, C-L, C-M, C-P.	8	2	---- ---	---- ---	2581 028	
	BEZEL and RETAINER, Outer, 2 D. H.T. and 4 D. H.T., C-H, Y-M	8	2	---- ---	---- ---	2581 364	2581 364
	Door Courtesy Lamp, D-P	8	2	---- ---	---- ---	2572 776	
	Console Courtesy Lamp, 2 D. H.T. and Cv. Cp., R-P, W-P, P-P, D-L	8	2	---- ---	*2572 521	*2572 521	
	Console Courtesy Lamp, D-P, C-M, C-P.	8	2	---- ---	---- ---	2572 521	
	Console Courtesy Lamp, 2 D. H.T., C-L	8	2	---- ---	---- ---	2572 521	
	Console Courtesy Lamp, 2 D. H.T. and 4 D. H.T., C-H	8	2	---- ---	---- ---	2572 521	
	Pocket Panel Lamp Switch, Cv.Cp.		1	---- ---	---- ---	---- ---	2096 181
8-11-18	CONTACT, C Pillar Lamp Socket, V Barracuda		4	2256 966			
	2 D. H.T., P		4	---- ---	2256 966	2256 966	
	2 D. H.T. and 4 D. H.T., D, C	8	4	---- ---	---- ---	2256 966	
	Door Courtesy Lamp Socket, D-P	8	4	---- ---	---- ---	2256 966	
	Pocket Panel Lamp Socket, Cv.Cp.	8	4	---- ---	---- ---	2256 966	
	Console Courtesy Lamp Socket, R-P, W-P, P-P, D-L 2 D. H.T. and Cv.Cp., D-P, C-M, C-P	8	4	---- ---	2256 966	2256 966	
	2 D. H.T., C-L	8	4	---- ---	---- ---	2256 966	
	2 D. H.T. and 4 D. H.T., C-H	8	4	---- ---	---- ---	2256 966	
	Front Door Courtesy Lamp Socket		8	---- ---	---- ---	---- ---	2256 966

TYPE LETTERS Indicate: V - Valiant, L - Dart, R - Belvedere, W - Coronet, P - Plymouth, D - Dodge, C - Chrysler, Y - Imperial

★Indicates use as required. Numerals in parentheses ( ) refer to notes. Printed in U.S.A.

⊟Indicates parts not listed in any previous parts book. Prices and specifications subject to change without notice.

* Indicates change or addition.

MyMopar.com

CODE	PART NAME AND DESCRIPTION	CYL	PER CAR	VALIANT / DART	PLYMOUTH BELVEDERE / DODGE CORONET	PLYMOUTH FURY / DODGE POLARA / CHRYSLER	IMPERIAL
8-11-0	**QUARTER OR COURTESY LAMP - Cont'd**						
8-11-21	SCREW, Courtesy Lamp Attaching, Cv. Cp. . .	8	4	---- ---	---- ---	6024 403	
8-11-24	RETAINER, Courtesy Lamp Lens, Cv. Cp. . . .		2	---- ---	2499 010	---- ---	2499 010
8-11-28	CORE, Door Courtesy Lamp Socket, D-P . . .	8	2	---- ---	---- ---	2161 316	
8-12-0	**AUTOMATIC DOOR LAMP SWITCH**						
8-12-2	SWITCH, Rear Door		2	1971 931	1971 931	1971 931	1971 931
	Front Door		2	1971 931	1971 931	1971 931	2497 590
8-12-3	SOCKET, 4 D., P		1	---- ---	1753 632	1753 632	
8-12-15	LENS, Bezel and Housing, 4 D., R-L, W-L, P-L		1	---- ---	2426 179	2426 179	
8-12-17	CONTACT, Socket, 4 D., P		2	---- ---	2256 966	2256 966	
8-13-0	**TRUNK LAMP**						
8-13-2	SWITCH, except Sta. Wgn.		1	2580 611	2580 611	2580 611	1972 426
8-13-3	SOCKET and BRACKET, except Sta. Wgn. . .		1	2096 857	2096 857	2096 857	2096 857
8-13-5	CONTACT, INSULATOR and SPRING PACKAGE, Socket, except Sta. Wgn.		1	2584 972	2584 972	2584 972	2584 972
8-14-0	**RUNNING LAMP**						
8-14-3	SOCKET, Sentry Signal Lamp		1	---- ---	---- ---	---- ---	1753 632
8-14-6	LENS, C-P	8	1	---- ---	---- ---	2575 093	
8-14-9	BEZEL and MEDALLION, C-P	8	1	---- ---	---- ---	2575 090	
8-14-13	GASKET, C-P	8	1	---- ---	---- ---	2578 740	
8-15-0	**CHASSIS AND BODY WIRING**						
8-15-2	WIRING, Headlamp and Engine Compartment .		1	2587 796	---- ---	---- ---	*2586 952
	Engine Compartment	6	1	---- ---	2587 797	2497 436	
	P, D	8	1	---- ---	2587 798	2497 469	
	C	8	1	---- ---	---- ---	2497 694	
	Headlamp, Parking and Turn Signal Lamp to Bulkhead Disconnect, R		1	---- ---	2497 323		
	W		1	---- ---	2497 319		
	Headlamp to Bulkhead Disconnect, P, D, C-L		1	---- ---	---- ---	*2586 756	
	C-M, C-P, C-H	8	1	---- ---	---- ---	2587 131	
	Dual Headlamp, C-M, C-P, C-H	8	2	---- ---	---- ---	2631 320	2631 320
8-15-3	BLOCK and CLIP PACKAGE, Fuse		1	2495 538	2495 538	2495 232	2584 922
8-15-4	WIRING, Body, except Sta. Wgn., V except Barracuda, W		1	2497 002	2496 512		
	V Barracuda		1	2585 140	---- ---	---- ---	2497 181
	Sta. Wgn.		1	2497 246			
	Except Sta. Wgn., L, R		1	2497 028	2496 565		
	w/Electric Tailgate Window Lift Switch, Sta. Wgn., P		1	---- ---	2497 262	2497 198	
	2 D. and 4 D., P-L, P-M		1	---- ---	---- ---	2496 648	
	2 D. H.T., 4 D. and 4 D. H.T., P-H, P-P . .		1	---- ---	---- ---	2497 055	

TYPE LETTERS indicate: V - Valiant, L - Dart, R - Belvedere, W - Coronet, P - Plymouth, D - Dodge, C - Chrysler, Y - Imperial

★Indicates use as required. Numerals in parentheses ( ) refer to notes. Printed in U.S.A.

⊟Indicates parts not listed in any previous parts book. Prices and specifications subject to change without notice.

March 1966 Supersedes May 1965. • Indicates change or addition.

MyMopar.com

CODE	PART NAME AND DESCRIPTION	CYL	PER CAR	VALIANT / DART	PLYMOUTH BELVEDERE / DODGE CORONET	PLYMOUTH FURY / DODGE POLARA / CHRYSLER	IMPERIAL
8-15-0	**CHASSIS AND BODY WIRING - Cont'd**						
8-15-4	WIRING - Cont'd						
	Cv.Cp., P		1	---- ---	---- ---	2580 858	
	Except Cv.Cp. and Sta. Wgn., D	8	1	---- ---	---- ---	2496 513	
	w/Electric Tailgate Window Lift Switch, Sta. Wgn., D, C	8	1	---- ---	---- ---	2496 352	
	Cv.Cp., D	8	1	---- ---	---- ---	2580 859	
	Except Cv. Cp. and Sta. Wgn., used w/one Bulb Type Tail Lamp, C-L, C-M, C-P	8	1	---- ---	---- ---	2496 576	
	Except Cv. Cp. and Sta. Wgn., used w/two Bulb Type Tail Lamp, C	8	1	---- ---	---- ---	2631 138	
	Cv. Cp., used w/one Bulb Type Tail Lamp, C	8	1	---- ---	---- ---	2580 694	
	Cv. Cp., used w/two Bulb Type Tail Lamp, C	8	1	---- ---	---- ---	2631 139	
	Except Sta. Wgn., used w/one Bulb Type Tail Lamp, C-H	8	1	---- ---	---- ---	2631 135	
	Console Wiring, w/Auto. Trans., w/o Tachometer, V-P, L-P		1	2580 291			
	Console Courtesy Lamp, w/Manual Trans., w/o Tachometer, R-P, W-P	8	1	---- ---	2497 442		
	Console Wiring, on Instrument Panel, R-P, W-P, P-P, C-P	8	1	---- ---	2497 416	2497 768	
	Console Wiring, on Instrument Panel, D-L 2 D. H.T. and Cv.Cp., D-P	8	1	---- ---	---- ---	2580 089	
	Console Wiring, on Instrument Panel, w/Manual Trans., w/Tachometer, C-L, 2 D. H.T., C-M 2 D. H.T., Cv.Cp. and 4 D.H.T.	8	1	---- ---	---- ---	2497 768	
	Console Wiring, on Instrument Panel, w/Auto. Trans., w/o Tachometer, C-L 2 D. H.T., C-M 2 D. H.T., Cv.Cp. and 4 D. H.T., C-H 2 D. H.T., Cv.Cp. and 4 D. H.T.	8	1	---- ---	---- ---	2497 768	
	Console Wiring, on Body, R-P, W-P, P-P, D-L 2 D. H.T. and Cv.Cp., C-P	8	1	---- ---	2497 362	2497 434	
	Console Wiring, on Body, w/Manual Trans., w/Tachometer, C-L 2 D. H.T., C-M	8	1	---- ---	---- ---	2497 434	
	Console Wiring, on Body, w/Auto. Trans., w/o Tachometer, C-L 2 D. H.T., C-M, C-H 2 D. H.T. and 4 D. H.T.	8	1	---- ---	---- ---	2497 434	
	Console Wiring, on Body, D-P.	8	1	---- ---	---- ---	2580 040	
	Console Wiring, on Body, w/Manual Trans., w/o Tachometer, D-P.	8	1	---- ---	---- ---	2580 041	
	Console Wiring, on Console, w/Auto. Trans., R-P, W-P	8	1	---- ---	2497 327		
	Console Wiring, on Console, w/Manual Trans., w/Tachometer, R-P, W-P.	8	1	---- ---	2497 445		
	Console Wiring, on Console, w/Manual Trans., w/Tachometer, P-P, D-L 2 D. H.T. and Cv.Cp., D-P, C-L 2 D. H.T., C-M, C-P.	8	1	---- ---	---- ---	2497 343	
	Console Wiring, on Console, w/Manual Trans., w/o Tachometer, P-P, D-L 2 D. H.T. and Cv.Cp., D-P	8	1	---- ---	---- ---	2497 413	
	Console Wiring, on Console, w/Auto. Trans., P-P, D-L 2 D. H.T. and Cv.Cp., D-P, C-M	8	1	---- ---	---- ---	2497 422	
	Console Wiring, on Console, w/Manual Trans., w/o Tachometer, C-P.	8	1	---- ---	---- ---	2497 422	
	Console Wiring, on Console, w/Auto. Trans., w/o Tachometer, C-L 2 D. H.T., C-H 2 D. H.T. and 4 D. H.T.	8	1	---- ---	---- ---	2497 422	
	Deck Lid, P-H, P-P		1	---- ---	---- ---	2496 849	
	GROMMET, Body Wiring, Sta. Wgn.		2	2291 672			
	GROMMET, Body Wiring Harness to Tieplate, Left, Sta. Wgn.		1	---- ---	2480 149		

TYPE LETTERS Indicate: V - Valiant, L - Dart, R - Belvedere, W - Coronet, P - Plymouth, D - Dodge, C - Chrysler, Y - Imperial

★Indicates use as required. Numerals in parentheses ( ) refer to notes. Printed in U.S.A.

⊟Indicates parts not listed in any previous parts book. Prices and specifications subject to change without notice.

* Indicates change or addition.

MyMopar.com

March 1966 Supersedes May 1965.

CODE	PART NAME AND DESCRIPTION	CYL	PER CAR	VALIANT / DART	PLYMOUTH BELVEDERE / DODGE CORONET	PLYMOUTH FURY / DODGE POLARA / CHRYSLER	IMPERIAL
8-15-0	**CHASSIS AND BODY WIRING - Cont'd**						
8-15-7	FUSE WIRE, Alternator Voltage Regulator . . .		1	2275 242	2275 242	2275 242	2275 242
	CABLE, Single Post to Starter Relay Fusible Link, w/60 Amp. Ammeter	6	1	2580 270			
	w/60 Amp. Ammeter, P, D		1	---- ---	2580 270	2580 270	
	w/40 Amp. Ammeter		1	---- ---	---- ---	---- ---	2497 430
	Horn Fusible Link		1	---- ---	---- ---	---- ---	2497 344
8-15-13	COVER, Fuse Block Base		1	2291 846	2291 846	2291 846	2291 846
8-15-20	CONDUIT, Front Door Courtesy Lamp Wiring, D-P	8	2	---- ---	---- ---	2497 774	
8-15-22	GROMMET, Parking and Headlamp Wiring Side Shield		2	2291 789			
	Rear Bumper Tail, Stop, Turn Signal and Back-Up Lamp Socket and Wiring		2	---- ---	---- ---	---- ---	1370 460
	Remote Deck Lid Lock Wiring		1	---- ---	---- ---	---- ---	2291 789
8-15-24	WIRING, Front Fender Turn Signal Indicator Lamp Jumper, C-L	8	2	---- ---	---- ---	2587 132	
8-15-27	CABLE, Fusible Link		1	2580 388	2580 389		
	On Instrument Panel		1	---- ---	---- ---	*2631 454	
8-15-32	CLIP, C Pillar Lamp Wiring, V Barracuda. . .		1	6015 288			
	Dome Lamp Wiring, 2 D., 2 D. H.T., 4 D. and Sta. Wgn., V		1	6015 288			
	Except Cv.Cp., L, P.		1	6015 288	6015 288	6015 288	
	4 D. and Sta. Wgn., D	8	1	---- ---	---- ---	6015 288	
	2 D., 4 D. 6 Window Sedan and Sta. Wgn.,C-L	8	1	---- ---	---- ---	6015 288	
	4 D. 6 Window Sedan and Sta. Wgn., C-H . . .	8	1	---- ---	---- ---	6015 288	
	Back-Up Lamp Switch Wiring, V-P, L-P, R-P, W-P, P-P, D-L, D-P, C		1	6015 377	6015 377	6015 377	
	w/Cross Bar, Fuse Block, P, D.		2	2291 842	2291 842	2291 842	
	C	8	1	---- ---	---- ---	2291 842	2291 842
	C	8	1	---- ---	---- ---	2291 841	2291 841
	Tail Lamp Wiring Snap on, Sta. Wgn., P . .		2	---- ---	---- ---	6015 377	
	Tail, Back-Up Lamp Wiring Snap on, except Sta. Wgn., P		4	---- ---	---- ---	*6015 377	
8-15-33	SCREW and WASHER, Bulkhead Connector Insulator Mounting		2	2426 920	2426 920	2426 920	2426 920
	SCREW, Headlamp and Engine Compartment Wiring Clip Mounting, on Rear of Alternator	8	1	6022 381	6022 381		
8-15-35	WIRING, Transigniter, w/426 cu. in. Eng., Hemispherical, except Sta. Wgn.	8	1	---- ---	2580 498		
8-15-52	WIRING, Tail Lamp, w/o Electric Tailgate Window Lift Switch, Sta. Wgn., L		1	2497 257			
	Rear Lamp and Tailgate, w/Electric Tailgate Window Lift Switch, Sta. Wgn., P-L, P-M		1	---- ---	2497 313	2580 140	
	Rear Lamp, w/o Electric Tailgate Window Lift Switch, Sta. Wgn., P-L, P-M		1	---- ---	---- ---	2580 138	
	Rear Lamp and Tailgate, w/o Electric Tailgate Window Lift Switch, Sta. Wgn., P-H . .	8	1	---- ---	---- ---	2497 446	
	Rear Lamp and Tailgate, w/Electric Tailgate Window Lift Switch, Sta. Wgn., P-H . .	8	1	---- ---	---- ---	2497 350	
	Rear Lamp and Tailgate, w/o Electric Tailgate Window Lift Switch, Sta. Wgn., D-L . .	8	1	---- ---	---- ---	2497 480	

TYPE LETTERS Indicate: V - Valiant, L - Dart, R - Belvedere, W - Coronet, P - Plymouth, D - Dodge, C - Chrysler, Y - Imperial

★Indicates use as required. Numerals in parentheses ( ) refer to notes. Printed in U.S.A.

⊟Indicates parts not listed in any previous parts book. Prices and specifications subject to change without notice.

March 1966 Supersedes May 1965. • Indicates change or addition.

MyMopar.com

CODE	PART NAME AND DESCRIPTION	CYL	PER CAR	VALIANT / DART	PLYMOUTH BELVEDERE / DODGE CORONET	PLYMOUTH FURY / DODGE POLARA / CHRYSLER	IMPERIAL
8-15-0	**CHASSIS AND BODY WIRING - Cont'd**						
8-15-52	WIRING - Cont'd						
	Rear Lamp and Tailgate, w/Electric Tailgate Window Lift Switch, Sta. Wgn., D . . .	8	1	---- ---	---- ---	2497 368	
	Rear Lamp and Tailgate Window Lift Switch, Sta. Wgn., C	8	1	---- ---	---- ---	2497 207	
	GROMMET, Tail Lamp, Sta. Wgn., L		1	2291 672			
8-15-53	WIRING, C Pillar Lamp, 2 D. H. T.		1	---- ---	2427 987		
	w/ 1/4" Blade Terminal and Insulator, P 2 D. H.T., D 2 D. H.T. and 4 D. H.T., C 2 D. H.T. and 4 D. H.T.		1	---- ---	---- ---	2497 489	
	w/Bullet Type Terminal, P 2 D. H.T., D 2 D. H.T. and 4 D. H.T., C 2 D. H.T. and 4 D. H.T.		1	---- ---	---- ---	2631 874	
			1	---- ---	---- ---	---- ---	2497 208
	Dome Lamp, Rear, Sta. Wgn.		1	---- ---	2497 138		

8-16-0 CABLE AND CONNECTIONS

NOTE: For a more practical and economical method of servicing, only the more complicated Assemblies will be stocked for service. These will be found in their respective Groups. On the more simple Assemblies the required length and size of Cable, necessary Terminals, etc., should be specified. For visual chart of Insulator and Terminal Packages see front of group.
Used on All Models as required.

Code		Part No.
8-16-1	CONNECTOR and TERMINAL PACKAGE, Headlamp Cable	1879 609
	TERMINAL and INSULATOR PACKAGE, Single Pole, Long.	1843 226
	8 Pole, Male, Upper, Bulkhead Disconnect	2495 223
	8 Pole, Male, Lower, Bulkhead Disconnect	2495 224
	Male and Female	2298 882
	8 Pole, Female	2084 424
	Female, Miniature	2084 421
	Electric Vent Wing Motor Wiring	2495 239
	Window Lift Switch, 3 Way.	2495 234
	Window Lift Switch, 5 Way.	2495 235
	Window Lift Switch, 10 Way	2584 843
	Window Lift Switch, 6 Way, w/Lockout Switch	2495 236
	Window Lift Switch, 6 Way, w/o Lockout Switch	2495 237
	Window Lift Switch, 5 Way.	2584 954
	Female, Miniature	2240 264
	Male, Miniature	2240 536
	6 Pole, Male and Female	2448 822
	Male, Turn Signal Switch Wiring	2495 542
	Female, Turn Signal Switch Wiring	2495 541
	Printed Circuit Board	2495 517
	Single Cable, Bullet Type	1843 444
	Seat Adjusting Switch, 6 Way	2584 842
	Air Conditioning Vacuum Switch	2584 841
	Power Vent Switch, 5 Way.	2584 953
	Turn Signal Switch, Male	2585 030

MyMopar.com

8-16-0 CABLE AND CONNECTIONS - Cont'd

Code		Part No.
8-16-3	CABLE, No. 8 Brown, 100 Foot Spool	2275 220
	No. 12 Red, 100 Foot Spool	1752 491
	No. 14 Green, 100 Foot Spool	1752 490
	No. 16 Blue, 100 Foot Spool	1752 489
	No. 18 Yellow, 100 Foot Spool	1752 488
	Wire and Spool, Triple Conductor, No. 14 Gauge, Red, Green and Black, 100 Foot Spool	2298 769
	Wire and Spool, Double Conductor, No. 14 Gauge, Green and Black, 100 Foot Spool	2298 770
	Wire and Spool, Double Conductor, No. 14 Gauge, Red and Black, 100 Foot Spool	2298 768
8-16-4	TERMINAL, Female Side Type	1842 009
	Wiring, 1.025" long	2290 069
	Printed Circuit Board Wiring, Female	2291 259
	w/CLIP, Fuse Block, Male	2291 838
	Female, Cold Crimp	2291 588
	w/INSULATOR and CABLE, Glove Box Lamp, No. 16 Red	2257 443
	w/INSULATOR and CABLE, Glove Box Lamp, No. 14 Brown	2257 444
	Printed Circuit Wiring, Female	2258 118
	Cable Connector	870 821
	Electrical Window Lift Safety Switch Wiring	903 895
	Wiring, .910" long	2258 591
	Wiring Fuse Clip	2290 207
	Wiring, 1.36" long	2258 590
	Female, K-Type	1819 836
	Male Blade	1770 660
	Wiring, .553" long	2427 529
	Male, Blade Crimped K-Type	2427 545
	Wiring, .570" long	2427 736
	Printed Circuit Board Clip	2427 725
	Wiring, 1.625" long	2197 947
	Turn Signal Switch and Horn Wiring	2496 532
	Wiring, .697" long	2427 848
	Battery to Starter Cable	2197 945
	Ignition Coil Feed Cable	2496 541
	Wiring, Female, Miniature Blade	2580 061
8-16-5	SLEEVE, Wiring Terminal, Black	1264 933
	Starting Motor Terminal	930 304
	Starting Motor Terminal	1188 502
8-16-6	INSULATOR, Alternator Battery Terminal	2291 093
	Printed Circuit Board Wiring Terminal, 5 Pole, Female	2291 258
	Printed Circuit Wiring Terminal	2258 651
	Headlamp Switch, 7 Pole, Female	2258 102
	Neutral Safety Cable Terminal	2497 701
8-16-8	CONNECTOR, 2 Way Polarized, Female	1842 003
	Single Cable	611 898
	Electric Window Lift Safety Switch Wiring	1345 871
	Back-Up Lamp Switch Wiring, w/Manual Trans.	2631 340
8-16-10	PLUG, Cable Connector, No. 12 Cable	665 151
	w/Wiring, Molded 2 Pole, Male and Female	2233 028
	w/Wiring, Molded 4 Pole, 2 Male and 2 Female	2497 346
8-16-16	MOLD and CABLE, Single Female	2580 064
	Single Male	2580 065
	Dual Female	2580 267

MyMopar.com

8-17-0 FUSES

CODE		AMP.	SIZE	PART NO.
8-17-2	FUSES			
	All Models	1	5/8	149 559
	All Models	2	5/8	148 086
	All Models	2	1-1/4	145 511
	All Models	3	5/8	445 635
	All Models	3	1-1/4	106 652
	All Models	4	1-1/4	148 511
	All Models	5	5/8	126 049
	All Models	6	3/4	147 683
	All Models	7-1/2	7/8	150 866
	All Models	7-1/2	1-1/4	455 107
	All Models	9	7/8	147 684
	All Models	10	5/8	142 864
	All Models	10	1-1/4	117 142
	All Models	14	1-1/16	147 685
	All Models	15	1-1/4	120 151
	All Models	20	5/8	106 650
	All Models	30	1-1/4	120 114
	All Models	30	1-7/16	147 686
	All Models	60	43/50	2258 284

CODE	PART NAME AND DESCRIPTION	CYL	PER CAR	VALIANT / DART	PLYMOUTH BELVEDERE / DODGE CORONET	PLYMOUTH FURY / DODGE POLARA / CHRYSLER	IMPERIAL
8-17-23	FUSE HOLDER, Console Courtesy Lamp, 10 Amp., R-P, W-P	8	1	---- ---	1971 742		
			1	---- ---	---- ---	1885 608	
8-17-30	CIRCUIT BREAKER, w/Mounting BRACKET, 30 Amp., Cv.Cp. and Sta. Wgn.		1	2495 545			
	w/Mounting BRACKET, 30 Amp., except 2 D.		1	---- ---	2495 545	2580 953	
	w/Mounting BRACKET, 4 D., 4 D. H. T. and Sta. Wgn., 15 and 30 Amp.		1	---- ---	---- ---	2580 952	
	w/Mounting BRACKET, 4 D., 4 D. H. T. and Sta. Wgn., 15 Amp.		1	---- ---	---- ---	2580 954	
	w/Mounting PLATE, 15 and 30 Amp.		1	---- ---	---- ---	---- ---	2580 148

8-19-0 INSTRUMENT PANEL WIRING

CODE	PART NAME AND DESCRIPTION	CYL	PER CAR	VALIANT / DART	PLYMOUTH BELVEDERE / DODGE CORONET	PLYMOUTH FURY / DODGE POLARA / CHRYSLER	IMPERIAL
8-19-2	CONTACT, Ash Receiver Lamp Socket, C	8	2	---- ---	---- ---	2256 966	
			1	---- ---	---- ---	---- ---	2256 966
8-19-3	WIRING, Tachometer, on Instrument Panel, V	8	1	2631 401			
	Instrument Panel, V, R, P		1	2497 944	2497 292	*2497 044	
	L, W, D		1	2497 945	2497 369	2497 227	
	C	8	1	---- ---	---- ---	2631 164	2497 293
	w/Headlamp Sentinel, C	8	1	---- ---	---- ---	⊟2631 948	
8-19-7	EXTENSION, Headlamp Switch Wiring, 3 Way		1	---- ---	---- ---	2231 105	
8-19-15	BOARD, Printed Circuit, V, W		1	2496 508	2496 611	---- ---	2496 938
	L		1	2580 263			
	R		1	---- ---	2497 390-1		
	Speedometer Cluster, P		1	---- ---	---- ---	2496 467	
	Instrument Cluster, P		1	---- ---	---- ---	2496 468	
	w/Ammeter and Temperature Gauge, D.	8	1	---- ---	---- ---	2496 050	
	w/Speedometer and Fuel Gauge, D	8	1	---- ---	---- ---	2496 091	
	Upper, C	8	1	---- ---	---- ---	2496 213	
	Lower, C	8	1	---- ---	---- ---	2496 215	
8-19-81	HOUSING, Ash Receiver Lamp, P	8	1	---- ---	---- ---	*2580 105	
8-19-83	SOCKET and CABLE, Ash Receiver, D-L, C	8	2	---- ---	---- ---	2291 751	
	D-H, D-P	8	1	---- ---	---- ---	2291 751	2291 751

TYPE LETTERS Indicate: V - Valiant, L - Dart, R - Belvedere, W - Coronet, P - Plymouth, D - Dodge, C - Chrysler, Y - Imperial

★Indicates use as required. Numerals in parentheses ( ) refer to notes. Printed in U.S.A.
⊟Indicates parts not listed in any previous parts book. Prices and specifications subject to change without notice.
* Indicates change or addition. May 1965, Supersedes Nov. 30, 1964.

MyMopar.com

CODE	PART NAME AND DESCRIPTION	CYL	PER CAR	VALIANT / DART	PLYMOUTH BELVEDERE / DODGE CORONET	PLYMOUTH FURY / DODGE POLARA / CHRYSLER	IMPERIAL
8-19-0	**INSTRUMENT PANEL WIRING - Cont'd**						
8-19-87	CONNECTOR, INSULATOR, GASKET and CLIPS, Bulkhead		1	2580 325	2580 325	2580 325	2580 325
8-20-0	**CIGAR LIGHTER**						
8-20-3	CIRCUIT BREAKER, Thermal, Manual Reset, Rear Compartment, D-P, C-M, C-P, C-H 2 D. H.T., 4 D. H.T. and Sta. Wgn.	8	1	---- ---	---- ---	1887 222	
	2 D. H.T., C-L	8	1	---- ---	---- ---	1887 222	
	Rear Door Arm Rest, 4 D. H.T.		2	---- ---	---- ---	---- ---	1887 222
	Quarter Panel Arm Rest, 2 D. H.T. and Cv.Cp.		2	---- ---	---- ---	---- ---	1887 222
8-20-5	HOUSING, Console Cigar Lighter, D-P	8	1	---- ---	---- ---	2572 590	
	Console Rear End Cap Cigar Lighter, C-L 2 D. H.T., C-M, C-P, C-H 2 D. H.T. and 4 D. H.T.	8	1	---- ---	---- ---	2572 539	
8-20-8	KNOB, Instrument Panel Cigar Lighter, V, P, C		1	*2497 278	*2290 188	*2290 188	*2290 188
	L, D		1	2496 790	---- ---	2496 790	
	Rear Compartment, D-P, C-H except 2 D. H.T. w/o Bucket Seat and w/o Console	8	1	---- ---	---- ---	2290 188	
	w/Bucket Seat, w/Console, C-L 2 D. H.T., C-M, C-P, C-H	8	1	---- ---	---- ---	2497 689	
	Rear Door Arm Rest, 4 D. H.T.		2	---- ---	---- ---	---- ---	2497 689
	Quarter Panel Arm Rest, 2 D. H.T. and Cv.Cp.		2	---- ---	---- ---	---- ---	2497 689
8-20-9	ELEMENT, Instrument Panel Cigar Lighter Heat		1	2580 453	2580 453	2580 453	2580 453
	Rear Compartment, D-P, C-M, C-P, C-H	8	1	---- ---	---- ---	2580 453	
	Quarter Panel Arm Rest, 2 D. H.T. and Cv. Cp.		2	---- ---	---- ---	---- ---	2580 453
	Rear Door Arm Rest, 4 D. H. T.		2	---- ---	---- ---	---- ---	2580 453
8-20-10	SHELL and CLAMP, Instrument Panel Cigar Lighter, Casco		1	2496 564	2496 562	2496 562	2496 562
	Cuno		1	2096 597	2096 599	2096 599	2096 599
	Rear Compartment, Casco, D-P, C-L 2 D. H.T., C-M, C-P, C-H	8	1	---- ---	---- ---	2496 562	
	Cuno, w/Bucket Seat, w/Console, D-P, C-L 2 D. H.T., C-M, C-P, C-H	8	1	---- ---	---- ---	2198 192	
	Cuno, w/Bucket Seat, w/o Console, 2 D. H.T., C-L, C-H	8	1	---- ---	---- ---	2096 599	
	Cuno, w/o Bucket Seat, w/o Console, C-M, C-H except 2 D. H.T.	8	1	---- ---	---- ---	2096 599	
	Rear Door Arm Rest, Casco, 4 D. H.T.		2	---- ---	---- ---	---- ---	2496 562
	Rear Door Arm Rest, Cuno, 4 D. H.T.		2	---- ---	---- ---	---- ---	2198 192
	Quarter Panel Arm Rest, Casco, 2 D. H.T. and Cv.Cp.		2	---- ---	---- ---	---- ---	2496 562
	Quarter Panel Arm Rest, Cuno, 2 D. H.T. and Cv.Cp.		2	---- ---	---- ---	---- ---	2198 192
8-20-16	BEZEL, Instrument Panel, L		1	⊟2497 321			
	Front Seat Cigar Lighter C-M, C-H, 2 D. H.T., 4 D. H.T. and Sta. Wgn.	8	1	---- ---	---- ---	2080 996	
8-21-0	**TERMINAL BLOCK**						
8-21-1	BLOCK, Terminal, Single Post, w/5/16" Stud, w/426 cu. in. Eng., Hemispherical, except Sta. Wgn.	8	1	---- ---	2580 465		

TYPE LETTERS Indicate: V - Valiant, L - Dart, R - Belvedere, W - Coronet, P - Plymouth, D - Dodge, C - Chrysler, Y - Imperial

★Indicates use as required. Numerals in parentheses ( ) refer to notes. Printed in U.S.A.

⊟Indicates parts not listed in any previous parts book. Prices and specifications subject to change without notice.

MyMopar.com

8-27-0 IGNITION DISTRIBUTOR

8-27-1 DISTRUBUTOR, Assembly

Models	Cyl.	Eng. (cu. in.)	Trans.	Breaker Points	Distributor Identification Stamped (Complete)	Replacement Assy's (Partial)(Less Cap & Rotor)
V, L	6	170	Manual	Single	2444 255	2444 367
V, L	6	170	Auto.	Single	2444 256	2444 368
V, L, R, W, P	6	225	Manual	Single	2444 907	2444 699
V, L, R, W, P	6	225	Auto.	Single	2444 648	2444 699
V, L, R, W, w/2 Barrel Carburetor	8	273	Manual	Single	2444 794	2444 858
V, L, R, W, w/2 Barrel Carburetor	8	273	Auto.	Single	2444 795	2444 859
V, L, Power Pack, w/1-4 Barrel Carburetor	8	273	All	Double	2444 853 IBS-4013	2444 873 IBS-4013S
R, W, P, D, w/2 Barrel Carburetor	8	318	Manual	Single	2444 258	*2444 328
R, W, P, D, w/2 Barrel Carburetor	8	318	Auto.	Single	2444 259	*2444 329
R, W, Power Pack, w/2 Barrel Carburetor	8	361	All	Single	2444 676	2444 700
R, W, Police, High Performance, w/1-4 Barrel Carburetor	8	383	All	Double	2444 358 IBS-4006J	2444 360 IBS-4006JS
R, W, w/2-4 Barrel Carburetor	8	426 Hemi-spherical	All	Double	2444 814 IBB-4204	2444 851 IBB-4204S
R, W, P, D, w/1-4 Barrel Carburetor	8	426 Std.	All	Double	2444 684 IBS-4006L	2444 704 IBS-4006LS
P, Police, Power Pack, w/2 Barrel Carburetor	8	383	All	Single	2444 676	2444 700
P, D, Police, w/1-4 Barrel Carburetor	8	383	All	Double	2444 358 IBS-4006J	2444 360 IBS-4006JS
P, w/1-4 Barrel Carburetor, High Performance	8	383	All	Double	2444 358 IBS-4006J	2444 360 IBS-4006JS
D w/2 or 4 Barrel Carburetor, C-L w/2 Barrel Carburetor	8	383	All	Single	2444 676	2444 700
D, Police, High Performance, w/1-4 Barrel Carburetor	8	413	All	Double	2444 683	2444 703
D, w/1-4 Barrel Carburetor, California Police	8	413	All	Double	2444 967 IBS-4006N IBS-4006K	⊟2444 987 IBS-4006NS IBS-4006KS
C-M, w/1-4 Barrel Carburetor	8	383	All	Single	2444 676	2444 700
C-M, Power Pack, C-P, C-H, w/1-4 Barrel Carburetor	8	413	All	Double	2444 683 IBS-4006K	2444 703 IBS-4006KS
C-H, Y1, w/1-4 Barrel Carburetor	8	413	Auto.	Single	2444 867	2444 869

CODE	PART NAME AND DESCRIPTION	CYL	PER CAR	VALIANT / DART	PLYMOUTH BELVEDERE / DODGE CORONET	PLYMOUTH FURY / DODGE POLARA / CHRYSLER	IMPERIAL
8-27-61	CAP, ROTOR and CABLE PACKAGE	6	1	2448 273	2448 273	2448 273	
8-27-259	SPACER, Cam		1	1889 996	1889 996	1889 996	1889 996
8-27-320	TUBE, Carburetor to Distributor Vacuum Control		1	2264 962	2264 962	2264 962	2264 962

TYPE LETTERS Indicate: V - Valiant, L - Dart, R - Belvedere, W - Coronet, P - Plymouth, D - Dodge, C - Chrysler, Y - Imperial

★Indicates use as required. Numerals in parentheses ( ) refer to notes. Printed in U.S.A.
⊟Indicates parts not listed in any previous parts book. Prices and specifications subject to change without notice.
* Indicates change or addition. May 1965, Supersedes Nov. 30, 1964.

MyMopar.com

8-27-0 IGNITION DISTRIBUTOR COMPONENT PARTS

FOR MODEL APPLICATION SEE CODE 8-27-1

		DISTRIBUTOR ASSEMBLIES			
	DISTRIBUTOR IDENTIFICATION STAMPED	2444 258	2444 259	2444 358 IBS-4006J	2444 255
	REPLACEMENT ASSY'S (PARTIAL) (LESS CAP & ROTOR)	2444 328	2444 329	2444 360 IBS-4006JS	2444 367
CODE	REMARKS				
8-27-4	GASKET, Distributor Mounting Oil Retaining	1326 836	1326 836	1326 836	2095 630
	GASKET, Distributor Mounting to Cylinder Block	---- ---	---- ---	---- ---	2095 740
8-27-26	CLAMP	1947 612	1947 612	1947 613	---- ---
8-27-71	CAP	2444 507	2444 507	1658 534	2098 765
8-27-76	SPRING, Cap Attaching	1838 508	1838 508	---- ---	1838 508
8-27-77	SPRING and HINGE PACKAGE, Cap Clamp	---- ---	---- ---	1879 606	---- ---
8-27-85	CONTACT and SPRING PACKAGE, Cap Plunger	---- ---	---- ---	2084 655	---- ---
8-27-100	OILER	953 717	953 717	---- ---	953 717
8-27-133	BEARING and THRUST WASHER PACKAGE, Shaft	2275 229	2275 229	---- ---	2275 229
	BEARING PACKAGE, Shaft	---- ---	---- ---	1879 596	---- ---
8-27-137	COLLAR and PIN PACKAGE, Shaft	2084 448	2084 448	---- ---	---- ---
8-27-138	PLATE, Breaker	2095 922	2095 922	*2585 162	2095 922
8-27-158	CONTACT SET	2098 244	2098 244	---- ---	2098 244
	CONTACT SET (2 req'd.)	---- ---	---- ---	2421 173	---- ---
8-27-190	CONDENSER	2098 058	2098 058	1818 757	2098 058
8-27-205	LEAD, Primary	2444 282	2444 282	2525 639	2444 249
8-27-250	SHAFT, GOVERNOR and CAM, Drive	*2444 404	*1889 683	---- ---	*2098 663
	SHAFT, Drive	---- ---	---- ---	2525 648	---- ---
	PIN, Shaft	9414 181	9414 181	9414 181	9414 181
8-27-278	WEIGHT PACKAGE, Governor	1881 945	1881 945	1881 746	1881 945
8-27-279	SPRING SET, Governor Weight	2525 251	1881 946	2084 866	2448 259
8-27-292	CAM and STOP PLATE	2095 741	1889 320	---- ---	2098 175
8-27-297	FELT DISC and SNAP RING PACKAGE	1879 607	1879 607	1879 607	1879 607
8-27-300	ROTOR	1838 516	1838 516	1658 535	2098 770
8-27-308	CONTROL, Vacuum	2444 398	2444 398	---- ---	2444 101
	CHAMBER PACKAGE, Vacuum	---- ---	---- ---	2084 868	---- ---
8-27-315	PLUG and GASKET PACKAGE, Vacuum Chamber	---- ---	---- ---	2299 319	---- ---
8-27-316	SPRING and WASHER PACKAGE, Vacuum Chamber	---- ---	---- ---	1881 766	---- ---
8-27-352	GEAR and PIN PACKAGE, Drive	---- ---	---- ---	---- ---	2084 653

TYPE LETTERS Indicate: V - Valiant, L - Dart, R - Belvedere, W - Coronet, P - Plymouth, D - Dodge, C - Chrysler, Y - Imperial

★Indicates use as required. Numerals in parentheses ( ) refer to notes. Printed in U.S.A.

⊟Indicates parts not listed in any previous parts book. Prices and specifications subject to change without notice.

 MyMopar.com * Indicates change or addition.

8-27-0 IGNITION DISTRIBUTOR COMPONENT PARTS - Cont'd

FOR MODEL APPLICATION SEE CODE 8-27-1

		DISTRIBUTOR ASSEMBLIES			
	DISTRIBUTOR IDENTIFICATION STAMPED	2444 256	2444 648 or 2444 907	2444 676	2444 683 IBS 4006K
	REPLACEMENT ASSY'S (PARTIAL) (LESS CAP & ROTOR)	2444 368	2444 699	2444 700	2444 703 IBS 4006KS
CODE	REMARKS				
8-27-4	GASKET, Distributor Mounting Oil Retaining	2095 630	2095 630	1326 836	1326 836
	GASKET, Distributor Mounting to Cylinder Block	2095 740	2095 740	---- ---	---- ---
8-27-71	CAP	2098 765	2444 690	2444 507	2585 000
8-27-76	SPRING, Cap Attaching	1838 508	1838 508	1838 508	---- ---
8-27-77	SPRING and HINGE PACKAGE, Clamp	---- ---	---- ---	---- ---	1879 606
8-27-85	CONTACT and SPRING PACKAGE, Cap Plunger	---- ---	---- ---	---- ---	2084 655
8-27-93	WICK, Drive Shaft Oiler Felt	---- ---	---- ---	---- ---	1479 105
8-27-100	OILER	953 717	953 717	---- ---	---- ---
8-27-133	BEARING PACKAGE, Shaft	---- ---	---- ---	---- ---	1879 596
	BEARING and THRUST WASHER PACKAGE, Shaft	2275 229	2275 229	2275 229	---- ---
8-27-137	COLLAR and PIN PACKAGE, Shaft	---- ---	---- ---	2084 448	---- ---
8-27-138	PLATE, Breaker	2095 922	2095 922	2095 922	*2585 162
8-27-158	CONTACT SET	2098 244	2098 244	2098 244	---- ---
	CONTACT SET (2 req'd.)	---- ---	---- ---	---- ---	2421 173
8-27-190	CONDENSER	2098 058	2098 058	2098 058	1818 757
8-27-205	LEAD, Primary	2444 249	2444 249	2444 282	2525 639
8-27-207	GROUND LEAD	---- ---	---- ---	---- ---	1527 974
8-27-250	SHAFT, Drive	---- ---	---- ---	---- ---	2584 991
	SHAFT, GOVERNOR and CAM, Drive	2098 519	2444 649	2098 189	---- ---
	PIN, Shaft	9414 181	---- ---	---- ---	---- ---
8-27-259	SPACER, Cam	---- ---	---- ---	---- ---	859 903
8-27-278	WEIGHT PACKAGE, Governor	1881 945	1881 945	1881 955	1881 746
8-27-279	SPRING SET, Governor Weight	2421 473	2584 844	2298 765	2084 866
8-27-292	CAM and STOP PLATE	2098 175	2095 274	2098 190	1879 312

TYPE LETTERS Indicate: V - Valiant, L - Dart, R - Belvedere, W - Coronet, P - Plymouth, D - Dodge, C - Chrysler, Y - Imperial

★Indicates use as required. Numerals in parentheses ( ) refer to notes. Printed in U.S.A.

⊟Indicates parts not listed in any previous parts book. Prices and specifications subject to change without notice.

• Indicates change or addition.

MyMopar.com

8-27-0 IGNITION DISTRIBUTOR COMPONENT PARTS - Cont'd

FOR MODEL APPLICATION SEE CODE 8-27-1

		DISTRIBUTOR ASSEMBLIES			
	DISTRIBUTOR IDENTIFICATION STAMPED	2444 256	2444 648 or 2444 907	2444 676	2444 683 IBS-4006K
	REPLACEMENT ASSY'S (PARTIAL) (LESS CAP & ROTOR)	2444 368	2444 699	2444 700	2444 703 IBS-4006KS
CODE	REMARKS				
8-27-297	FELT DISC and SNAP RING PACKAGE, Cam Sleeve.	1879 607	1879 607	1879 607	1879 607
8-27-300	ROTOR	2098 770	2098 770	1838 516	1658 535
8-27-308	CHAMBER PACKAGE, Vacuum	---- ---	---- ---	---- ---	2084 868
	CONTROL, Vacuum, See Note 1	*2098 664	*2098 209	*2444 677	---- ---
	CONTROL, Vacuum, See Note 2	---- ---	⊟2444 911	---- ---	---- ---
8-27-315	PLUG and GASKET PACKAGE, Vacuum Chamber . .	---- ---	---- ---	---- ---	2299 319
8-27-316	SPRING and WASHER PACKAGE, Vacuum Chamber.	---- ---	---- ---	---- ---	1881 766
8-27-352	GEAR and PIN PACKAGE, Shaft	2084 653	2084 653	---- ---	---- ---

NOTE 1: Used w/2444 648 Distributor.

NOTE 2: Used w/2444 907 Distributor.

NOTES

MyMopar.com

8-27-0 IGNITION DISTRIBUTOR COMPONENT PARTS - Cont'd

FOR MODEL APPLICATION SEE CODE 8-27-1

		DISTRIBUTOR ASSEMBLIES			
	DISTRIBUTOR IDENTIFICATION STAMPED	2444 684 IBS-4006L	2444 814 IBB-4204	2444 794	2444 795
	REPLACEMENT ASSY'S (PARTIAL) (LESS CAP & ROTOR)	2444 704 IBS-4006LS	2444 851 IBB-4204S	2444 858	2444 859
CODE	REMARKS				
8-27-4	GASKET, Distributor Mounting Oil Retaining	1326 836	1326 836	1326 836	1326 836
8-27-26	CLAMP	2406 143	2406 143	1947 612	1947 612
8-27-71	CAP	2585 000	2585 000	2444 507	2444 507
8-27-76	SPRING, Cap Attaching	---- ---	---- ---	1838 508	1838 508
8-27-77	SPRING and HINGE PACKAGE, Clamp	1879 606	⊟2586 577		
8-27-85	CONTACT and SPRING PACKAGE, Cap Plunger	2084 655	2084 655	---- ---	---- ---
8-27-93	WICK, Drive Shaft Oiler Felt	1479 105	1479 105	---- ---	---- ---
8-27-100	OILER	953 717	953 717	953 717	953 717
8-27-133	BEARING PACKAGE, Shaft	1879 596	1879 596	---- ---	---- ---
	BEARING and THRUST WASHER PACKAGE, Shaft	---- ---	---- ---	2275 229	2275 229
8-27-137	COLLAR and PIN PACKAGE, Shaft	---- ---	---- ---	2084 448	2084 448
8-27-138	PLATE, Breaker	*2585 162	2584 993	2095 922	2095 922
8-27-158	CONTACT SET	2421 174	---- ---	2098 244	2098 244
	CONTACT SET (2 req'd)	---- ---	⊟2808 870	---- ---	---- ---
8-27-190	CONDENSER	1818 757	---- ---	2098 058	2098 058
8-27-205	LEAD, Primary	2525 639	2584 996	2444 282	2444 282
8-27-207	GROUND LEAD	1527 974	---- ---	---- ---	---- ---
8-27-231	COVER, Terminal Slot	---- ---	1267 367	---- ---	---- ---
8-27-250	SHAFT, Drive	2584 991	2584 995	---- ---	---- ---
	SHAFT, GOVERNOR and CAM, Drive	---- ---	---- ---	2444 457	2642 010
8-27-259	SPACER, Cam	859 903	859 903	1889 996	1889 996
8-27-278	WEIGHT PACKAGE, Governor	1881 746	1881 746	1881 945	1881 945
8-27-279	SPRING SET, Governor Weight	2525 266	2084 301	2525 538	2586 572
8-27-292	CAM and STOP PLATE	2584 992	2584 994	2095 741	1889 320
8-27-297	FELT DISC and SNAP RING PACKAGE, Cam Sleeve	1879 607	1879 607	1879 607	1879 607
8-27-300	ROTOR	1658 535	1658 535	1838 516	1838 516
8-27-308	CHAMBER PACKAGE, Vacuum	2084 868	---- ---	---- ---	---- ---
	CONTROL, Vacuum	---- ---	---- ---	2444 456	2444 456
8-27-315	PLUG and GASKET PACKAGE, Vacuum Chamber	2299 319	---- ---	---- ---	---- ---
8-27-316	SPRING and WASHER PACKAGE, Vacuum Chamber	1881 758	---- ---	---- ---	---- ---

TYPE LETTERS Indicate: V - Valiant, L - Dart, R - Belvedere, W - Coronet, P - Plymouth, D - Dodge, C - Chrysler, Y - Imperial

★Indicates use as required. Numerals in parentheses ( ) refer to notes. Printed in U.S.A.
⊟Indicates parts not listed in any previous parts book. Prices and specifications subject to change without notice.
* Indicates change or addition. March 1966 Supersedes May 1965.

MyMopar.com

8-27-0 IGNITION DISTRIBUTOR COMPONENT PARTS - Cont'd

FOR MODEL APPLICATION SEE CODE 8-27-1

		DISTRIBUTOR ASSEMBLIES		
	DISTRIBUTOR IDENTIFICATION STAMPED	2444 867	2444 853	*2444 967
	REPLACEMENT ASSY'S (PARTIAL)(LESS CAP & ROTOR)	2444 869	IBS-4013 2444 873 IBS-4013S	IBS-4006N *2444 987 IBS-4006NS
CODE	REMARKS			
8-27-4	GASKET, Distributor Mounting Oil Retaining	1326 836	1326 836	*1326 836
8-27-71	CAP	2444 507	2585 000	*2585 000
8-27-76	SPRING, Cap Attaching	1838 508	---- ---	---- ---
8-27-77	SPRING and HINGE PACKAGE, Cap Clamp	---- ---	1879 606	*1879 606
8-27-85	CONTACT and SPRING PACKAGE, Cap Plunger	---- ---	2084 655	*2084 655
8-27-100	OILER	---- ---	953 717	* 953 717
8-27-133	BEARING and THRUST WASHER PACKAGE, Shaft	2275 229	2585 021	*2585 021
8-27-137	COLLAR and PIN PACKAGE, Shaft	2084 448	2585 022	*2585 022
8-27-138	PLATE, Breaker	2095 922	2585 017	⊟2585 162
8-27-158	CONTACT SET	2098 244	---- ---	---- ---
	CONTACT SET (2 req.)	---- ---	2421 175	*2421 173
8-27-190	CONDENSER	2098 058	1818 757	*1818 757
8-27-205	LEAD, Primary	2444 282	2585 019	*2525 639
8-27-207	GROUND LEAD	---- ---	1527 974	*1527 974
8-27-250	SHAFT, GOVERNOR and CAM	2095 648	---- ---	---- ---
	SHAFT, Drive	---- ---	2585 016	*2584 991
8-27-278	WEIGHT PACKAGE, Governor	1881 955	1879 595	*1881 746
8-27-279	SPRING SET, Governor Weight	1881 956	2585 144	*2084 866
8-27-292	CAM and STOP PLATE	1889 709	1843 346	*1879 312
8-27-297	FELT DISC and SNAP RING PACKAGE	1879 607	1879 607	*1879 607
8-27-300	ROTOR	1838 516	1658 535	*1658 535
8-27-306	PARTS PACKAGE, Vacuum Chamber	---- ---	2585 020	*2585 020
8-27-308	CONTROL, Vacuum	2098 197	---- ---	---- ---
	CHAMBER, Vacuum	---- ---	1843 034	*1889 495
8-27-310	SPRING, Vacuum Chamber	---- ---	1879 291	*1818 650

TYPE LETTERS Indicate: V - Valiant, L - Dart, R - Belvedere, W - Coronet, P - Plymouth, D - Dodge, C - Chrysler, Y - Imperial

★Indicates use as required. Numerals in parentheses ( ) refer to notes. Printed in U.S.A.
⊟Indicates parts not listed in any previous parts book. Prices and specifications subject to change without notice.
May 1965, Supersedes Nov. 30, 1964. * Indicates change or addition.

MyMopar.com

8-28-0 ALTERNATOR

NOTE: For Component Parts of Alternators see Part Type Code 8-29-0. Where Component Parts of a listed Alternator are not shown please order by description. Production Assemblies w/o Pulley are for Identification purposes only. Order Service Alternators w/Pulley.

NOTE: Higher Ampere Leece-Neville Alternators and Alternator Regulators are used on some 1965 Vehicles. Chrysler Parts do not stock Complete Replacement Assemblies or Repair Parts for Leece-Neville Units. When Complete Alternator or Alternator Regulator Assemblies or Repair Parts are required, they should be ordered by Description, Direct from the nearest Leece-Neville Distributor or Leece-Neville, 1374 E. 51st Street, Cleveland, Ohio. Attaching Parts such as Brackets, Straps and Belts are available through your usual Chrysler Parts Source.

CODE	REMARKS	Alternator w/o Pulley	Pulley No.	Amp.	Alternator w/Pulley
8-28-3	All Models	2098 525	2095 430	S 35	2098 830
	All 8 Cylinder Models, w/Air Conditioning, w/3" Pulley	2098 535	2095 059	D 40-46	2098 850
	R2, W2, w/426 cu. in. Eng., Hemispherical, w/3-1/2" Pulley	2098 525	2095 662	D 35	2098 830
	All Models except Y1	2098 535	2444 478	S 40-46	2098 850

NOTE: Letters "S" and "D" in Pulley Margin represent Single Groove and Double Groove.

CODE	PART NAME AND DESCRIPTION	CYL	PER CAR	VALIANT / DART	PLYMOUTH BELVEDERE / DODGE CORONET	PLYMOUTH FURY / DODGE POLARA / CHRYSLER	IMPERIAL
8-28-6	BOLT, Alternator Mounting, to Cylinder Head, w/Air Conditioning, w/Compact Leece-Neville Alternator, w/273 cu.in. Eng.	8	1	---- ---	9422 791		
	SCREW, Alternator Mounting, w/Air Conditioning, w/Compact Leece-Neville Alternator, w/318 cu. in. Eng., P, D	8	1	---- ---	9422 790	9422 790	
	WASHER, Alternator Mounting Screw, P, D	8	1	---- ---	6022 190	6022 190	
8-28-7	NUT, Alternator Mounting Bolt Lock		1	6023 035	6023 035	6023 035	6023 035
8-28-14	SPACER, Alternator Adjusting Strap, to Water Pump Housing, w/o Air Conditioning, w/High Performance	8	1	---- ---	2206 450	2206 450	2206 450
8-28-15	STRAP, Alternator Adjusting	6	1	2202 767	2202 767	2202 767	
	w/o Air Conditioning, w/Manual Trans.	8	1	2202 942			
	w/o Air Conditioning, a/Auto. Trans.	8	1	2532 483			
	w/Air Conditioning	8	1	2463 127			
	Alternator Mounting Bracket, w/Air Conditioning	8	1	2468 824			
	w/Manual Trans., w/273 and 318 cu.in. Eng.	8	1	---- ---	2202 942		
	w/Auto. Trans., w/273 and 318 cu.in. Eng.	8	1	---- ---	2532 483		
	w/o Air Conditioning, w/Leece-Neville Alternator, w/Compact Leece-Neville Alternator, w/318 cu. in. Eng., P, D	8	1	---- ---	2264 518	2264 518	
	w/o Air Conditioning, w/Compact Leece-Neville Alternator, w/273 cu. in. Eng.	8	1	---- ---	2468 339		
	w/Air Conditioning, w/Compact Leece-Neville Alternator, w/273 cu. in. Eng.	8	1	---- ---	2536 080		
	w/Air Conditioning, w/Compact Leece-Neville Alternator, w/318 cu. in. Eng., P, D	8	1	---- ---	2536 104	2536 104	
	w/o Air Conditioning, R, W, w/361 and 383 cu. in. Eng., P except 318 cu. in. Eng., D except 318 cu. in. Eng., C	8	1	---- ---	2206 446	2206 446	2206 447

TYPE LETTERS Indicate: V - Valiant, L - Dart, R - Belvedere, W - Coronet, P - Plymouth, D - Dodge, C - Chrysler, Y - Imperial

★Indicates use as required. Numerals in parentheses ( ) refer to notes. Printed in U.S.A.
⊟Indicates parts not listed in any previous parts book. Prices and specifications subject to change without notice.
* Indicates change or addition. March 1966 Supersedes May 1965.

MyMopar.com

CODE	PART NAME AND DESCRIPTION	CYL	PER CAR	VALIANT / DART	PLYMOUTH BELVEDERE / DODGE CORONET	PLYMOUTH FURY / DODGE POLARA / CHRYSLER	IMPERIAL
8-28-0	**ALTERNATOR - Cont'd**						
8-28-15	STRAP - Cont'd						
	w/o Air Conditioning, w/426 cu. in. Eng., Hemispherical	8	1	---- ---	⊟2536 909		
	w/o Air Conditioning, w/426 cu. in. Eng., Std.	8	1	---- ---	*2206 446		
	w/Air Conditioning, Field Installation, R, W, w/361 and 383 cu. in. Eng., P w/383 cu. in. Eng., D w/383 and 413 cu. in. Eng., C	8	1	---- ---	*1999 184	*1999 184	*1999 184
	w/o Air Conditioning, w/Leece-Neville Alternator, w/Compact Leece-Neville Alternator, R, W, w/361 and 383 cu. in. Eng., P w/383 cu. in. Eng., D w/383 cu. in. Eng.	8	1	---- ---	2206 348	2206 348	
	w/Air Conditioning, w/318 cu. in. Eng., P, D	8	1	---- ---	---- ---	*2463 127	
	w/o Air Conditioning, w/318 cu. in. Eng., P, D	8	1	---- ---	---- ---	*2463 572	
	w/Air Conditioning, R, W, w/361 and 383 cu. in. Eng., P w/383 cu. in. Eng., D w/383 and 413 cu. in. Eng., C	8	1	---- ---	2129 060	2129 060	2129 060
	w/Air Conditioning, w/Compact Leece-Neville Alternator, R, W, w/361 and 383 cu. in. Eng., P w/383 cu. in. Eng., D w/383 and 413 cu. in. Eng.	8	1	---- ---	2536 503	2536 503	
	w/o Air Conditioning, w/Leece-Neville Alternator, w/Compact Leece-Neville Alternator, w/413 cu. in. Eng., D	8	1	---- ---	---- ---	2268 928	
8-28-19	SCREW, Water Pump Body Alternator Adjusting Strap Mounting, 3/8" x 4.25", w/273 cu. in. Eng.	8	1	2206 300	2206 300		
	w/318 cu. in. Eng., P, D	8	1	---- ---	*2206 300	*2206 300	
8-28-32	SUPPORT, Alternator Adjusting Strap, to Air Conditioning Compressor, w/Compact Leece-Neville Alternator, w/273 cu. in. Eng.	8	1	---- ---	2536 081		
	To Intake Manifold, w/Air Conditioning, w/Compact Leece-Neville Alternator, R, W, w/361 cu. in. Eng., P w/383 cu. in. Eng., D w/383 and 413 cu. in. Eng.	8	1	---- ---	2536 504	2536 504	
	To Air Conditioning Compressor, w/Compact Leece-Neville Alternator, w/318 cu. in. Eng., P, D	8	1	---- ---	*2536 103	*2536 103	
8-28-36	BRACKET, Alternator and Coil Mounting	6	1	2465 166	2465 166	2465 166	
	w/Compact Leece-Neville Alternator	6	1	2465 558	2465 558	2465 558	
	w/Air Conditioning	8	1	2468 823			
	w/o Air Conditioning	8	1	2463 390			
	w/Leece-Neville Alternator	6	1	---- ---	2406 526	2406 526	
	w/273 and 318 cu. in. Eng.	8	1	---- ---	2463 390		
	w/o Air Conditioning, w/Compact Leece-Neville Alternator, w/273 cu. in. Eng.	8	1	---- ---	2468 338		
	w/Air Conditioning, w/Compact Leece-Neville Alternator, w/273 cu. in. Eng.	8	1	---- ---	2468 477		
	w/o Air Conditioning, w/Leece-Neville Alternator, w/318 cu. in. Eng., P, D	8	1	---- ---	*2264 523	*2264 523	
	w/o Air Conditioning, w/Compact Leece-Neville Alternator, w/318 cu. in. Eng., P, D	8	1	---- ---	*2465 721	2465 721	
	w/Air Conditioning, w/Compact Leece-Neville Alternator, w/318 cu. in. Eng., P, D	8	1	---- ---	*2468 421	*2468 421	

TYPE LETTERS Indicate: V - Valiant, L - Dart, R - Belvedere, W - Coronet, P - Plymouth, D - Dodge, C - Chrysler, Y - Imperial

★Indicates use as required. Numerals in parentheses ( ) refer to notes. Printed in U.S.A.

⊟Indicates parts not listed in any previous parts book. Prices and specifications subject to change without notice.

MyMopar.com

CODE	PART NAME AND DESCRIPTION	CYL	PER CAR	VALIANT / DART	PLYMOUTH BELVEDERE / DODGE CORONET	PLYMOUTH FURY / DODGE POLARA / CHRYSLER	IMPERIAL
8-28-0	**ALTERNATOR - Cont'd**						
8-28-36	BRACKET - Cont'd						
	Front, w/o Air Conditioning, w/Leece-Neville Alternator, w/Compact Leece-Neville Alternator, R, W, w/361 and 383 cu. in. Eng., P w/383 cu. in. Eng., D w/383 cu. in. Eng.	8	1	---- ---	2206 346	2206 346	
	w/Spring Anchor, w/o Air Conditioning, w/Leece-Neville Alternator, w/Compact Leece-Neville Alternator, R, W, w/361 and 383 cu. in. Eng., P w/383 cu. in. Eng., D w/383 cu. in. Eng.	8	1	---- ---	2206 347	2206 347	
	w/o Air Conditioning, R, W, w/361 and 383 cu. in. Eng., P except 318 cu. in. Eng., D except 318 cu. in. Eng., C	8	1	---- ---	2206 445	2206 445	2206 445
	w/o Air Conditioning, w/426 cu. in. Eng., Hemispherical	8	1	---- ---	2536 908		
	w/o Air Conditioning, w/426 cu. in. Eng., Std.	8	1	---- ---	2206 445		
	w/Air Conditioning, Field Installation, R, W, w/361 and 383 cu. in. Eng., P w/383 cu. in. Eng., D w/383 and 413 cu. in. Eng., C	8	1	---- ---	2129 156	2129 156	2129 156
	w/Air Conditioning, R, W, w/361 and 383 cu. in. Eng., P w/383 cu. in. Eng., D w/383 and 413 cu. in. Eng., C.	8	1	---- ---	2129 154	2129 154	2129 154
	w/Air Conditioning, w/Compact Leece-Neville Alternator, R, W, w/361 and 383 cu. in. Eng., P w/383 cu. in. Eng., D w/383 and 413 cu. in. Eng.	8	1	---- ---	2468 240	2468 240	
	w/o Air Conditioning, w/318 cu. in. Eng., P, D	8	1	---- ---	---- ---	2463 114	
	w/Air Conditioning, w/318 cu. in. Eng., P, D.	8	1	---- ---	---- ---	2536 140	
	Front, w/o Air Conditioning, w/Leece-Neville Alternator, w/Compact Leece-Neville Alternator, w/413 cu. in. Eng., D.	8	1	---- ---	---- ---	2268 927	
8-28-51	SUPPORT, Alternator Mounting Bracket, w/Air Conditioning, w/Compact Leece-Neville Alternator, w/273 cu. in. Eng.	8	1	---- ---	2536 082		
	w/Air Conditioning, w/Compact Leece-Neville Alternator, w/318 cu. in. Eng., P, D.	8	1	---- ---	2536 101	2536 101	
8-28-74	REGULATOR, Alternator Voltage		1	2098 300	2098 300	2098 300	2098 300
	SCREW, Mounting		2	6006 120	6006 120	6006 120	6006 120
8-28-88	SCREW and WASHER, Alternator Regulator Terminal		★	*2095 371	*2095 371	*2095 371	*2095 371
8-28-292	SPACER, Alternator to Cylinder Head, w/o Air Conditioning, R, W, except 273 and 318 cu. in. Eng., P except 318 cu. in. Eng., D, C	8	1	---- ---	2206 448	2206 448	2206 448
	SPACER, Alternator to Alternator, w/o Air Conditioning, R, W, except 273 and 318 cu. in. Eng., P except 318 cu. in. Eng., D, C	8	1	---- ---	2206 449	2206 449	2206 449

TYPE LETTERS Indicate: V - Valiant, L - Dart, R - Belvedere, W - Coronet, P - Plymouth, D - Dodge, C - Chrysler, Y - Imperial

★Indicates use as required. Numerals in parentheses ( ) refer to notes. Printed in U.S.A.
⊟Indicates parts not listed in any previous parts book. Prices and specifications subject to change without notice.
* Indicates change or addition.

MyMopar.com
March 1966 Supersedes May 1965.

8-29-0 ALTERNATOR COMPONENT PARTS

FOR MODEL APPLICATION SEE CODE 8-28-3

		ALTERNATOR ASSEMBLIES	
	Alternator, w/o Pulley	2098 525	2098 535
	Alternator, w/Pulley	2098 830	2098 850
CODE	NAME		
8-29-17	BRUSH, WASHER and TERMINAL PACKAGE	2084 673	2084 673
8-29-42	HOLDER, Brush	2095 038	2095 038
8-29-97	ROTOR	*2585 175	*2585 175
8-29-98	STATOR	2095 427	2095 427
8-29-99	RETAINER, WASHER and SLIP RING PACKAGE, Rotor Grease	*2586 512	*2586 512
8-29-129	CAPACITOR and INSULATOR PACKAGE	2421 137	2421 137
8-29-130	SCREW, Capacitor Ground	6022 381	6022 381
8-29-131	RECTIFIER, Positive (3 req.)	*2098 288	*2098 288
	RECTIFIER, Negative (3 req.)	*2098 287	*2098 287
8-29-132	SHIELD, Rectifier End	2098 646	2098 646
8-29-133	BEARING, Rectifier End Shield	2098 512	2098 512
8-29-134	INSERT, Rectifier End Mounting	2095 052	2095 052
8-29-135	HEAT SINK, Rectifier	2095 925	2095 925
8-29-145	SPACER PACKAGE, Heat Sink	2421 138	2421 138
8-29-153	SHIELD, Drive End	2095 945	2095 945
8-29-154	BEARING, Drive End Shield	2098 478	2098 478
8-29-155	PLATE, Drive End Bearing Retainer	2095 012	2095 012
8-29-194	SCREW, Field Terminal Mounting	6023 112	6023 112
	SCREW, Brush Mounting	6023 112	6023 112
8-29-208	SCREW, Frame (3 req.)	*2098 633	*2098 633

CODE	PART NAME AND DESCRIPTION	CYL	PER CAR	VALIANT / DART	PLYMOUTH BELVEDERE / DODGE CORONET	PLYMOUTH FURY / DODGE POLARA / CHRYSLER	IMPERIAL
8-31-0	**PARKING BRAKE SIGNAL LAMP**						
8-31-2	LAMP, P		1	---- ---	---- ---	2580 461	
8-31-5	LENS, Bezel and Housing		1	*2426 179			
	LENS and BEZEL, P		1	---- ---	---- ---	2580 332	
8-31-8	HOUSING, D.	8	1	---- ---	---- ---	2580 193	
8-31-10	SWITCH		1	2291 852	2291 852	2291 852	
8-31-11	BRACKET, Switch Mounting		1	*2291 091			
	NUT and WASHER		1	*6023 215			

TYPE LETTERS Indicate: V - Valiant, L - Dart, R - Belvedere, W - Coronet, P - Plymouth, D - Dodge, C - Chrysler, Y - Imperial

★Indicates use as required. Numerals in parentheses ( ) refer to notes. Printed in U.S.A.
⊟Indicates parts not listed in any previous parts book. Prices and specifications subject to change without notice.

MyMopar.com

CODE	PART NAME AND DESCRIPTION	CYL	PER CAR	VALIANT / DART	PLYMOUTH BELVEDERE / DODGE CORONET	PLYMOUTH FURY / DODGE POLARA / CHRYSLER	IMPERIAL
8-31-0	**PARKING BRAKE SIGNAL LAMP - Cont'd**						
8-31-16	SOCKET, P, D		1	1753 632	---- ---	1753 632	
	C	8	1	---- ---	---- ---	2496 279	
8-31-18	CONTACT, Socket, D	8	1	---- ---	---- ---	2256 966	
8-32-0	**HORN**						
8-32-2	HORN PACKAGE, Universal, 12 Volt, Low Note, Single Terminal		1	2421 486	2421 486	2421 486	2421 486
	HORN PACKAGE, Universal, 12 Volt, High Note, Single Terminal		1	2421 487	2421 487	2421 487	2421 487
8-32-15	BRACKET, Horn Mounting		2	2580 965	2580 965	2580 965	2580 965
8-32-18	SCREW and WASHER, Horn to Yoke Mounting		★	6023 253	6023 253	6023 253	6023 253
8-33-0	**HORN CONTROLS**						
8-33-4	RING, Horn, Partial, V, R		1	2265 517	2530 954		
	RING, Horn, Full, L, R, D-L, D-H		1	2530 186	2530 268	2530 268	
	RING, Horn, Full, W, P Police		1	---- ---	2530 953	2530 268	
	RING, Horn, Full, w/o Spoke Inlay, w/o Chrome Rim, P		1	---- ---	---- ---	2530 270	
	RING, Horn, Partial, w/Spoke Cover, P-L, P-M, P-H		1	---- ---	---- ---	2530 262	
	RING, Horn, Full, w/o Spoke Inlay, w/Chrome Rim, D	8	1	---- ---	---- ---	2530 270	
	RING, Horn, w/o Spoke Inlay, w/o Chrome Rim, C-L, C-M	8	1	---- ---	---- ---	2530 217	
	RING, Horn, w/Aluminized Insert, w/Chrome Rim, C-L, C-M, C-P	8	1	---- ---	---- ---	2530 222	
	RING, Horn, w/Wood Insert, w/Chrome Rim, C-H	8	1	---- ---	---- ---	2530 223	
	BAR, Horn, Two Tone		1	---- ---	---- ---	---- ---	2530 208
	GROMMET, Horn Bar Locating Pin		1	---- ---	---- ---	---- ---	2409 772
8-33-5	RETAINER, Steering Wheel Ornament, w/Horn Button, w/Plastic Wheel, V-H, V-P, L-H, L-P		1	2530 256			
	w/Partial Horn Ring, R		1	---- ---	2530 256		
	w/Full Horn Ring, W, P		1	---- ---	2530 256	2530 839	
	Steering Wheel Ornament, 4 D., R-L, W-L, P-L		1	---- ---	4010 VT5	4010 VX9	
	Horn Bar		1	---- ---	---- ---	---- ---	2530 209
8-33-6	ORNAMENT, Steering Wheel, w/Horn Button, V-L		1	2266 209			
	w/Partial Horn Ring, Export, V-L		1	2266 209			
	w/Partial Horn Ring, V-H, V-P		1	2266 209			
	w/Horn Button, w/Plastic Wheel, V-H, V-P		1	2530 258			
	w/Horn Button, w/Plastic Wheel, L-H, L-P		1	2530 840			
	w/Horn Button, L-L, W-L		1	2530 843	2530 843		
	w/Full Horn Ring, L		1	2530 843			
	w/Retainer, w/Full Horn Ring, R, P		1	---- ---	2530 965	2530 965	
	w/Horn Button, Taxi, P		1	---- ---	*2405 253	2405 253	
	w/Retainer, w/Full Horn Ring, w/o Adjustable Tilt Steering Wheel, D-L, D-H	8	1	---- ---	---- ---	2530 961	
	w/Retainer, w/Full Horn Ring, w/o Spoke Inlay, w/Chrome Rim, D-L, D-H	8	1	---- ---	---- ---	2530 273	

TYPE LETTERS Indicate: V - Valiant, L - Dart, R - Belvedere, W - Coronet, P - Plymouth, D - Dodge, C - Chrysler, Y - Imperial

★Indicates use as required. Numerals in parentheses ( ) refer to notes. Printed in U.S.A.

⊖Indicates parts not listed in any previous parts book. Prices and specifications subject to change without notice.

* Indicates change or addition. March 1966 Supersedes May 1965.

MyMopar.com

CODE	PART NAME AND DESCRIPTION	CYL	PER CAR	VALIANT / DART	PLYMOUTH BELVEDERE / DODGE CORONET	PLYMOUTH FURY / DODGE POLARA / CHRYSLER	IMPERIAL
8-33-0	**HORN CONTROLS - Cont'd**						
8-33-6	ORNAMENT - Cont'd						
	w/Retainer, w/Full Horn Ring, w/o Spoke Inlay, w/Chrome Rim, D-P.	8	1	---- ---	---- ---	2530 274	
	w/Retainer, C	8	1	---- ---	---- ---	2530 219	
8-33-12	DECAL, Steering Wheel Spoke, w/Full Horn Ring, w/Aluminized Insert, w/Chrome Rim, C-L, C-M, C-P	8	1	---- ---	---- ---	2530 176	
	w/Full Horn Ring, w/Wood Insert, w/Chrome Rim, C-H	8	1	---- ---	---- ---	2530 177	
	Steering Wheel Horn Ring, w/Full Horn Ring, w/Aluminized Insert, w/Chrome Rim, C-L, C-M, C-P	8	1	---- ---	---- ---	2530 220	
	w/Full Horn Ring, w/Wood Insert, w/Chrome Rim, C-H	8	1	---- ---	---- ---	2530 221	
8-33-15	SPRING, Horn Bar		2	---- ---	---- ---	---- ---	2533 945
8-33-23	SPACER, Steering Wheel Ornament, V		1	2401 209			
	L		1	2530 844			
	Horn Button, W-L		1	---- ---	2530 844		
	Horn Button Ornament, Taxi		1	---- ---	2409 002	2409 002	
8-33-25	PILOT, Horn Bar.	8	2	---- ---	---- ---	---- ---	2405 269
8-33-39	BUSHING PACKAGE, Horn Ring Spacer		1	2240 608	2240 608	2240 608	2240 608
8-33-40	SCREW, Horn Ring Spacer Bushing		★	1325 906	1325 906	1325 906	1325 906
8-33-46	TERMINAL, Horn Bar	8	2	---- ---	---- ---	---- ---	2405 271
8-33-47	INSULATOR, Horn Bar Terminal	8	2	---- ---	---- ---	---- ---	2405 270
8-33-69	BASE, Horn Cap, Blue, V-L, L-L, W-L . . .		1	*4017 AB7	*4017 AB7		
	Red, V-L		1	4017 AR6			
	Tan, V-L, L-L, W-L		1	*4017 AT5	*4017 AT5		
	Turquoise, L-L, W-L		1	*4017 AQ6	*4017 AQ6		
	Red, L-L		1	4017 AR7			
8-33-70	"O" RING, Steering Wheel Ornament Retainer, W		1	6023 346	6023 346		
8-33-90	SWITCH, Horn, Complete, w/Partial Horn Ring, V-L, L-L		1	2076 543			
	w/3 Spoke Steering Wheel, V-H, V-P, L-H, L-P		1	2076 543			
	w/Full Horn Ring, V-L, L-L		1	1972 391			
	w/o 3 Spoke Steering Wheel, V-H, V-P, L-H, L-P		1	1972 391			
			1	---- ---	1972 391	1972 391	1972 391
	Taxi, R-L 4 D., W-L 2 D. and 4 D., P-L 4 D.		1	---- ---	2076 543	2076 543	
8-33-118	CONTACT, Horn, w/Adjustable Tilt Steering Wheel, P, D		1	---- ---	---- ---	2643 684	
	C		1	---- ---	---- ---	2643 687	2643 690
8-33-121	RING and FEED CABLE, Horn Contact.		1	2497 588	2497 588		
	w/o Adjustable Tilt Steering Wheel		1	---- ---	---- ---	2497 588	2427 124
8-33-164	RELAY and BRACKET, Horn, 12 Volt		1	2291 436	2291 436	2291 436	2291 436
	SCREW, Mounting		1	6006 120	6006 120	6006 120	6006 120

TYPE LETTERS Indicate: V - Valiant, L - Dart, R - Belvedere, W - Coronet, P - Plymouth, D - Dodge, C - Chrysler, Y - Imperial

★Indicates use as required. Numerals in parentheses ( ) refer to notes. Printed in U.S.A.

⊟Indicates parts not listed in any previous parts book. Prices and specifications subject to change without notice.

March 1966 Supersedes May 1965. * Indicates change or addition.

MyMopar.com

CODE	PART NAME AND DESCRIPTION	CYL	PER CAR	VALIANT / DART	PLYMOUTH BELVEDERE / DODGE CORONET	PLYMOUTH FURY / DODGE POLARA / CHRYSLER	IMPERIAL
8-34-0	**HEADLAMP**						
8-34-1	HEADLAMP, Single, Complete, Riteway Shift, R		2	2290 761	2290 761		
	Leftway Shift, Export, R		2	2290 760	2290 760		
	High and Low Beam, Riteway Shift, W, P, D, C-L		2	---- ---	2524 930	2524 930	
	High Beam, Riteway Shift, W, P, D, C-L		2	---- ---	2524 931	2524 931	
	High and Low Beam, Leftway Shift, Export, W, P, D, C-L		2	---- ---	2524 529	2524 529	
8-34-5	NUT, Headlamp Bezel, P		2	---- ---	---- ---	2524 525	
	NUT, Headlamp Mounting Plate, P		8	---- ---	---- ---	2524 526	
8-34-38	GASKET, Headlamp Cover, C-M, C-P, C-H	8	2	---- ---	---- ---	2445 836	
	Headlamp to Grille		2	---- ---	---- ---	---- ---	2524 471
8-34-40	DOOR, Headlamp, V		2	2445 946			
	COVER, L		1	2445 234-5			
	BEZEL, R, P		1	---- ---	2445 240-1	2445 242-3	
	W, D		1	---- ---	2445 244-5	2445 248-9	
	C-L	8	1	---- ---	---- ---	2445 404-5	
	C-M, C-P, C-H	8	1	---- ---	---- ---	2445 420-1	2445 760-1
8-34-62	NUT, Headlamp Housing, L		8	6024 856			
	NUT and WASHER, Headlamp and Air Shield Moulding, L		8	6023 201			
	NUT, Headlamp Bezel to Headlamp Mounting Plate, R		2	---- ---	6025 033		
	NUT, Headlamp Bezel to Extension Headlamp Mounting Plate, Upper, R		2	---- ---	6025 032		
	NUT, Headlamp Bezel to Headlamp Plate, W		8	---- ---	6025 032		
	NUT, Headlamp Bezel to Grille Panel, W		2	---- ---	6026 075		
	NUT, Headlamp Bezel to Radiator Cross Bar, W		2	---- ---	6026 075		
8-34-63	RETAINER, Headlamp Door, Lower, V		2	2445 947			
8-34-95	GLASS and DECAL, Headlamp Bezel, C-M, C-P, C-H	8	1	---- ---	---- ---	2578 612-3	2578 616-7
8-34-96	SCREW, Headlamp Cover, L		8	6025 849			
	SCREW and WASHER, to Headlamp Housing, L		4	6025 306			
	SCREW, Headlamp Mounting, R		6	9422 821	9422 821		
	SCREW, Headlamp Mounting, W, P		12	---- ---	9422 821	9422 821	
	SCREW, Headlamp Bezel, R		6	---- ---	6025 681		
	SCREW, Headlamp Bezel, R		2	---- ---	6025 682		
	SCREW, Headlamp Bezel to Headlamp Plate, W		8	---- ---	6025 685		
	SCREW, Headlamp Bezel to Radiator Cross Bar, W		2	---- ---	6025 685		
	SCREW, Headlamp Bezel to Grille Panel, W, P		2	---- ---	6025 685	6025 683	
	SCREW, Headlamp Bezel to Headlamp Mounting Plate, P		8	---- ---	---- ---	6025 684	
	SCREW, Headlamp Bezel Attaching, D	8	8	---- ---	---- ---	⊟6025 676	
	SCREW, Headlamp Mounting, D, C-L	8	12	---- ---	---- ---	6025 897	
	SCREW, Headlamp Bezel to Radiator Grille Extension, C-L	8	8	---- ---	---- ---	⊟6025 676	
	SCREW, Headlamp Glass Frame to Radiator Grille Frame, C-M, C-P, C-H	8	10	---- ---	---- ---	6025 711	
	SCREW, Headlamp Bezel to Headlamp Glass Frame, C-M, C-P, C-H	8	8	---- ---	---- ---	⊟9405 339	
	SCREW, Headlamp Glass Frame		12	---- ---	---- ---	---- ---	6024 995

TYPE LETTERS Indicate: V - Valiant, L - Dart, R - Belvedere, W - Coronet, P - Plymouth, D - Dodge, C - Chrysler, Y - Imperial

★Indicates use as required. Numerals in parentheses ( ) refer to notes. Printed in U.S.A.

⊟Indicates parts not listed in any previous parts book. Prices and specifications subject to change without notice.

* Indicates change or addition.

March 1966 Supersedes May 1965.

MyMopar.com

CODE	PART NAME AND DESCRIPTION	CYL	PER CAR	VALIANT / DART	PLYMOUTH BELVEDERE / DODGE CORONET	PLYMOUTH FURY / DODGE POLARA / CHRYSLER	IMPERIAL
8-34-0	**HEADLAMP - Cont'd**						
8-34-110	GASKET, Headlamp Glass, C-M, C-P, C-H . .	8	2	---- ---	---- ---	2417 163	2417 163
8-34-175	SEALED BEAM UNIT, Single Headlamp,						
	Riteway Shift, R		2	2197 450	2197 450		
	Leftway Shift, Export, R		2	2197 680	2197 680		
	High and Low Beam, Leftway Shift, W		2	---- ---	1841 775	1841 775	
	High Beam, W.		2	---- ---	1753 435	1753 435	1753 435
	High and Low Beam, Riteway Shift, W		2	---- ---	1753 436	1753 436	1753 436
8-34-176	SEAT and SCREW, Headlamp Sealed Beam						
	Unit Mounting, High Beam, W		2	---- ---	2578 826	2578 826	2578 826
	High and Low Beam, W		2	---- ---	2578 827	2578 827	2578 827
8-34-177	SPRING, Headlamp Sealed Beam Unit						
	Mounting Seat Adjusting, R.		2	1972 972	1972 972		
	W, P, D, C-L.		4	---- ---	1972 972	1972 972	
8-34-178	SCREW, Headlamp Sealed Beam Unit						
	Mounting Seat Adjusting, R.		4	1658 660	1658 660		
	W		8	---- ---	2197 327	2197 327	2197 327
8-34-180	RING and LUG, Headlamp Sealed Beam Unit						
	Retaining, R		2	2426 312	2426 312		
	W		4	---- ---	2449 525	2449 525	2449 525
8-34-363	FRAME, Headlamp Glass, C-M, C-P, C-H. . .	8	1	---- ---	---- ---	2445 416-7	2445 252-3
8-34-365	STRAP, Headlamp Glass Frame, C-M,						
	C-P, C-H	8	4	---- ---	---- ---	2524 127	
8-35-0	**IGNITION COIL, SWITCH AND LOCK CYLINDER**						
8-35-4	COIL, Ignition, R1, W1.		1	2495 531	2495 531	2495 531	2495 531
	Except 426 cu. in. Eng.	8	1	---- ---	2495 531		
	w/426 cu. in. Eng., Std.	8	1	---- ---	2495 531		
	w/426 cu. in. Eng., Hemispherical	8	1	---- ---	2444 861		
	WASHER, Mounting to Bracket on Intake						
	Manifold, w/High Performance		★	---- ---	6022 185	6022 185	6022 185
8-35-22	RESISTOR, Ignition Coil Primary, R1, W1 . . .		1	2275 590	2275 590	2275 590	2275 590
	Except 426 cu. in. Eng.	8	1	---- ---	2275 590		
	w/426 cu. in. Eng., Std.	8	1	---- ---	2275 590		
	w/426 cu. in. Eng., Hemispherical	8	1	---- ---	2444 641		
8-35-41	BRACKET, Ignition Coil, w/Leece-Neville						
	Alternator	6	1	*2203 144	*2203 144	*2203 144	
	On Coil	6	1	*1688 207	*1688 207	*1688 207	
	On Coil, w/273 cu. in. Eng.	8	1	2095 374	2095 374		
	On Coil, w/361, 383 and 426 cu. in. Eng. . . .	8	1	---- ---	1688 207		
	On Coil, w/318 cu. in. Eng., P, D	8	1	---- ---	*2095 374	*2095 374	
	w/Air Conditioning, w/361 and 383 cu. in. Eng.	8	1	---- ---	2468 188		
	w/Air Conditioning, P w/383 cu. in. Eng., D w/383 and 413 cu. in. Eng., C-L w/383 cu. in. Eng., C-M w/383 and 413 cu. in. Eng., C-P, C-H.	8	1	---- ---	---- ---	2468 188	2468 188
	On Coil, P except 318 cu. in. Eng., D, C . . .	8	1	---- ---	---- ---	*1688 207	*1688 207
8-35-49	HEAT SINK, Ignition, w/426 cu. in. Eng.,						
	Hemispherical	8	1	---- ---	2444 639		
8-35-52	SCREW, Ignition Coil Primary Resistor		1	6006 120	6006 120	6006 120	6006 120

TYPE LETTERS Indicate: V - Valiant, L - Dart, R - Belvedere, W - Coronet, P - Plymouth, D - Dodge, C - Chrysler, Y - Imperial

★Indicates use as required. Numerals in parentheses ( ) refer to notes. Printed in U.S.A.

⊟Indicates parts not listed in any previous parts book. Prices and specifications subject to change without notice.

May 1965, Supersedes Nov. 30, 1964. * Indicates change or addition.

MyMopar.com

CODE	PART NAME AND DESCRIPTION	CYL	PER CAR	VALIANT / DART	PLYMOUTH BELVEDERE / DODGE CORONET	PLYMOUTH FURY / DODGE POLARA / CHRYSLER	IMPERIAL
8-35-0	**IGNITION COIL, SWITCH AND LOCK CYLINDER - Cont'd**						
8-35-59	SWITCH, Ignition and Starter		1	*2497 158	*2497 158	*2497 158	*2497 158
8-35-61	NUT, Ignition and Starter Switch Bezel Mounting, D	8	1	---- ---	---- ---	2580 123	2076 174
8-35-85	BEZEL, Ignition and Starter Switch Mounting, V, P		1	⊟2496 517	---- ---	*2496 761	
	L, R, C		1	2497 320	1972 084	2497 143	
	W, D		1	---- ---	*2256 449	⊟2496 864	
8-35-95	RETAINER, Ignition and Starter Switch, R, D		1	---- ---	1972 077	2496 858	
8-35-111	CYLINDER PACKAGE, Ignition and Door Lock, except Sta. Wgn.		1	2161 192	2161 192	2520 822	2499 022
	Police and Taxi, 2 D. and 4 D., R-L, W-L, P		1	---- ---	2162 503	2520 825	
	Ignition, Door and Manual Tailgate Lock, Police, Sta. Wgn., P		1	---- ---	2241 871	2520 826	
	Ignition, Door and Manual Tailgate Lock, Sta. Wgn.		1	2419 183	2162 531		
	Ignition, Door and Electric Tailgate Lock, Sta. Wgn.		1	2076 533	2076 533	2520 824	
	Ignition, Door and Electric Tailgate Lock, Police, Sta. Wgn., P		1	---- ---	2427 116	2520 827	
8-35-115	CYLINDER and KEY, Ignition Lock		1	2086 047	2086 047	2086 047	2086 047
8-36-0	**IGNITION**						
8-36-1	CABLE SET, Chrysler, Ignition, Resistor Type	6	1	2495 510	2495 510	2495 510	
	CABLE SET, Resistor Type, w/273 cu. in. Eng.	8	1	2525 537	2525 537		
	CABLE SET, Resistor Type, w/318 cu. in. Eng., P, D	8	1	---- ---	2495 513	2495 513	
	CABLE SET, Resistor Type, w/361 and 383 cu. in. Eng.	8	1	---- ---	2495 516		
	CABLE SET, Resistor Type, w/426 cu. in. Eng., Std.	8	1	---- ---	2495 516		
	CABLE SET, Resistor Type, w/426 cu. in. Eng., Hemispherical	8	1	---- ---	2525 672		
	CABLE SET, Resistor Type, P except 318 cu. in. Eng., D, C	8	1	---- ---	---- ---	2584 965	2495 514
	CABLE PACKAGE, Resistor Type, w/273 cu. in. Eng.	8	8	2525 534	2525 534		
	CABLE PACKAGE, Resistor Type, w/318 cu. in. Eng., P, D	8	8	---- ---	2525 534	2525 534	
	CABLE PACKAGE, Resistor Type, w/426 cu. in. Eng., Hemispherical	8	8	---- ---	2525 673		
	CABLE PACKAGE, Resistor Type, w/361 and 383 cu. in. Eng.	8	8	---- ---	2525 533		
	CABLE PACKAGE, Resistor Type, w/426 cu. in. Eng., Std.	8	8	---- ---	2525 533		
	CABLE PACKAGE, Resistor Type, No. 6 and 8 Cable, P except 318 cu. in. Eng., D, C	8	2	---- ---	---- ---	2525 534	
	CABLE PACKAGE, Resistor Type, except No. 6 and 8 Cable, P except 318 cu. in. Eng., D, C	8	6	---- ---	---- ---	2525 533	
	CABLE PACKAGE, Resistor Type, No. 2 Cable		1	---- ---	---- ---	---- ---	2525 533
	CABLE PACKAGE, Resistor Type, except No. 2 Cable		7	---- ---	---- ---	---- ---	2525 534

TYPE LETTERS Indicate: V - Valiant, L - Dart, R - Belvedere, W - Coronet, P - Plymouth, D - Dodge, C - Chrysler, Y - Imperial

★Indicates use as required. Numerals in parentheses ( ) refer to notes. Printed in U.S.A.
⊟Indicates parts not listed in any previous parts book. Prices and specifications subject to change without notice.
* Indicates change or addition.

March 1966 Supersedes May 1965.
MyMopar.com

CODE	PART NAME AND DESCRIPTION	CYL	PER CAR	VALIANT / DART	PLYMOUTH BELVEDERE / DODGE CORONET	PLYMOUTH FURY / DODGE POLARA / CHRYSLER	IMPERIAL
8-36-0	**IGNITION - Cont'd**						
8-36-4	BRACKET, Spark Plug Wire, w/318 cu. in. Eng., P, D	8	2	---- ---	*1739 355	*1739 355	
	Intermediate, Front, Left, R, W, w/361 and 383 cu. in. Eng., P except 318 cu. in. Eng., D, C	8	1	---- ---	*2268 122	*2268 122	
	Front, Center, w/426 cu. in. Eng., Hemispherical	8	1	---- ---	2268 122		
	Intermediate, Left, w/426 cu. in. Eng., Hemispherical	8	1	---- ---	2468 897		
	Front, Left, w/426 cu. in. Eng., Hemispherical	8	1	---- ---	2468 896		
	Front, w/361 and 383 cu. in. Eng.	8	2	---- ---	2465 777		
	Front, w/426 cu. in. Eng., Std.	8	2	---- ---	2465 777		
	Front, Center, Intermediate, w/361 and 383 cu. in. Eng.	8	1	---- ---	2465 778		
	Front, Center, Intermediate, w/426 cu. in. Eng., Std.	8	1	---- ---	2465 778		
	Front, Center, Intermediate, P except 318 cu. in. Eng., D, C	8	1	---- ---	---- ---	*2465 778	
	Front, Right, P except 318 cu. in. Eng., D, C	8	1	---- ---	---- ---	*2465 777	*2463 276
	Front, Left, P except 318 cu. in. Eng., D, C	8	1	---- ---	---- ---	*2468 200	*2468 054
	Front, Left, P except 318 cu. in. Eng., D, C	8	1	---- ---	---- ---	*2532 096	
	Rear, on Cylinder Head, P except 318 cu. in. Eng., D, C	8	1	---- ---	---- ---	*2536 409	
	Rear, Left, P except 318 cu. in. Eng., D, C	8	1	---- ---	---- ---	*2465 776	
8-36-14	SEPARATOR, Spark Plug Cable, Right Bank, w/High Performance	8	1	---- ---	1841 499	1841 499	
8-36-49	CABLE, Coil Secondary	6	1	2095 773	2095 773	2095 773	
	w/273 cu. in. Eng., w/Chrysler Built Distributor	8	1	2444 469	2444 469		
	w/273 cu. in. Eng., w/Prestolite Distributor	8	1	2095 776	2095 776		
	w/318 cu. in. Eng., w/Chrysler Built Distributor, P, D	8	1	---- ---	*2095 772	*2095 772	
	w/318 cu. in. Eng., w/Prestolite Distributor, P, D	8	1	---- ---	*2095 775	*2095 775	
	w/426 cu. in. Eng., Hemispherical	8	1	---- ---	2444 587		
	w/Black Nipple, w/361 and 383 cu. in. Eng.	8	1	---- ---	2095 772		
	w/Red Nipple, w/361 and 383 cu. in. Eng.	8	1	---- ---	2095 775		
	w/Black Nipple, w/426 cu. in. Eng., Std.	8	1	---- ---	2095 772		
	w/Red Nipple, w/426 cu. in. Eng., Std.	8	1	---- ---	2095 775		
	w/Black Nipple, P except 318 cu. in. Eng., D, C	8	1	---- ---	---- ---	*2095 772	*2095 772
	w/Red Nipple, P except 318 cu. in. Eng., D, C	8	1	---- ---	---- ---	*2095 775	*2095 775
8-36-83	CABLE, Spark Plug, No. 1 and 6 Cable	6	2	*2444 024	*2444 024	2444 024	
	No. 2 and 5 Cable	6	2	*2444 025	*2444 025	*2444 025	
	No. 3 and 4 Cable	6	2	*2444 031	*2444 031	*2444 031	
8-36-92	GROMMET, Spark Plug Cable Position	8	8	2098 980	2098 980	2098 980	2098 980
8-36-95	TERMINAL, Spark Plug Cable, w/High Performance	8	8	---- ---	2098 243	2098 243	2098 243
8-36-96	NIPPLE, Coil Secondary Cable, Coil End		1	2095 768	2095 768	2095 768	2095 768
	Coil Secondary Cable, Distributor End		1	2095 766	2095 766	2095 766	2095 766
	Spark Plug Cable, Distributor End		★	2095 766	2095 766	2095 766	2095 766
8-36-114	PLUG, Spark, Champion N-14Y	6	6	2098 381	2098 381	2098 381	
	Champion N-14Y, w/273 cu. in. Eng.	8	8	2098 381	2098 381		

TYPE LETTERS Indicate: V - Valiant, L - Dart, R - Belvedere, W - Coronet, P - Plymouth, D - Dodge, C - Chrysler, Y - Imperial

★Indicates use as required. Numerals in parentheses ( ) refer to notes. Printed in U.S.A.

⊟Indicates parts not listed in any previous parts book. Prices and specifications subject to change without notice.

May 1965, Supersedes Nov. 30, 1964. * Indicates change or addition.

MyMopar.com

CODE	PART NAME AND DESCRIPTION	CYL	PER CAR	VALIANT / DART	PLYMOUTH BELVEDERE / DODGE CORONET	PLYMOUTH FURY / DODGE POLARA / CHRYSLER	IMPERIAL
8-36-0	**IGNITION - Cont'd**						
8-36-114	PLUG - Cont'd						
	Champion N-9Y, w/1-4 Barrel Carburetor, w/Power Pack	8	8	2098 378			
	Champion N-60 Y, w/426 cu. in. Eng., Hemispherical, w/2-4 Barrel Carburetor	8	8	---- ---	2642 007		
	Champion J-14Y, Police, Power Pack, w/2 Barrel Carburetor, R, W, w/318 and 361 cu. in. Eng., P w/383 cu. in. Eng.	8	8	---- ---	2444 870	2444 870	
	Champion J-10Y, w/1-4 Barrel Carburetor, R, W, w/383 cu. in. Eng., P w/383 and 426 cu. in. Eng., D, C-M w/413 cu. in. Eng., C-P w/413 cu. in. Eng., C-H.	8	8	---- ---	2098 337	2098 337	
	Champion J-10Y, Police, w/1-4 Barrel Carburetor, R, W, w/383 cu. in. Eng., P w/383 and 426 cu. in. Eng., D.	8	8	---- ---	2098 337	2098 337	
	Champion J-10Y, w/1-4 Barrel Carburetor, w/426 cu. in. Eng., Std.	8	8	---- ---	2098 337		
	Champion J-10Y, w/1-4 Barrel Carburetor, w/426 cu.in. Eng., Std., Police	8	8	---- ---	2098 337		
	Champion J-14Y, w/2 Barrel Carburetor, P w/318 cu. in. Eng., D-L w/318 and 383 cu. in. Eng., D-H w/383 cu. in. Eng., C-L w/383 cu. in. Eng., C-M w/383 cu. in. Eng.	8	8	---- ---	---- ---	2444 870	
	Champion J-14Y, w/1-4 Barrel Carburetor, w/413 cu. in. Eng., D, C-H	8	8	---- ---	---- ---	2444 870	2444 870
8-36-124	SHIELD, Spark Plug Heat, Right, w/361 and 383 cu. in. Eng.	8	1	---- ---	2268 647		
	Right, w/426 cu. in. Eng., Std.	8	1	---- ---	2268 647		
	Left, w/361 and 383 cu. in. Eng.	8	1	---- ---	2206 006		
	Left, w/426 cu. in. Eng., Std.	8	1	---- ---	2206 006		
	Right, w/383, 413 and 426 cu. in. Eng.	8	1	---- ---	---- ---	1821 394	
	Left, w/383, 413 and 426 cu. in. Eng.	8	1	---- ---	---- ---	2468 202	
			2	---- ---	---- ---	---- ---	2468 202
8-36-136	TUBE, Spark Plug	6	6	2121 245	2121 245	2121 245	
	w/426 cu. in. Eng., Hemispherical	8	8	---- ---	2468 024		
8-36-137	SEAL, Spark Plug Tube	6	6	1947 708	1947 708	1947 708	
	w/426 cu. in. Eng., Hemispherical	8	8	---- ---	2468 196		
8-36-139	INSULATOR, Spark Plug Cable, w/426 cu. in. Eng., Hemispherical	8	8	---- ---	1479 232		
8-37-0	**INSTRUMENT PANEL INSTRUMENTS**						
8-37-1	AMMETER, V, W, D		1	2496 503	2496 618	2496 021	
	L, C		1	2496 402	---- ---	2497 308	2496 966
	w/Oil Indicator Lamp, 40 Amp., R		1	---- ---	2496 695		
	w/Oil Indicator Lamp, 60 Amp., R		1	---- ---	2496 696		
	60 Amp., W, P		1	---- ---	2496 619	2496 454	
	35 and 40 Amp., P		1	---- ---	---- ---	2496 453	
	60 Amp., D	8	1	---- ---	---- ---	2496 022	
8-37-2	REGULATOR, Instrument Voltage, V, C		1	2258 413	2258 413	2258 413	
8-37-10	WASHER, Ammeter Mounting, L, D		2	2209 343	---- ---	2209 343	2209 343

TYPE LETTERS Indicate: V - Valiant, L - Dart, R - Belvedere, W - Coronet, P - Plymouth, D - Dodge, C - Chrysler, Y - Imperial

★Indicates use as required. Numerals in parentheses ( ) refer to notes. Printed in U.S.A.

⊟Indicates parts not listed in any previous parts book. Prices and specifications subject to change without notice.

* Indicates change or addition.

March 1966 Supersedes May 1965.

MyMopar.com

CODE	PART NAME AND DESCRIPTION	CYL	PER CAR	VALIANT / DART	PLYMOUTH BELVEDERE / DODGE CORONET	PLYMOUTH FURY / DODGE POLARA / CHRYSLER	IMPERIAL
8-37-0	**INSTRUMENT PANEL INSTRUMENTS - Cont'd**						
8-37-15	LAMP, Headlamp Switch Title, D	8	1	---- ---	---- ---	⊟2580 287	
	Windshield Wiper Switch and Cigar Lighter Title, D	8	1	---- ---	---- ---	⊟2580 286	
8-37-26	SOCKET, Clock Lamp, P		2	---- ---	---- ---	2097 003	
	C	8	1	---- ---	---- ---	2097 003	
	w/Wiper and Cigar Lighter Title Lamp, D-H, D-P	8	1	---- ---	---- ---	2097 003	
	Headlamp Lamp Switch Title Lamp, D-H, D-P	8	1	---- ---	---- ---	2097 003	
	Switch Title Lamp		4	---- ---	---- ---	---- ---	2097 003
8-37-27	CONTACT, Switch Title Lamp Socket		4	---- ---	---- ---	---- ---	2256 966
8-37-70	RELAY, Low Fuel Signal		1	---- ---	---- ---	---- ---	2580 124
8-37-88	SOCKET, Low Oil Pressure Indicator Lamp, on Printed Circuit Board, V		1	2496 279	2496 279	2496 279	
	L		1	2257 440			
	Vacuum Gauge Lamp, C-L 2 D. H. T., C-M, C-P, C-H 2 D. H. T. and 4 D. H. T.	8	1	---- ---	---- ---	*1753 632	
	Temperature Indicator Lamp, C	8	2	---- ---	---- ---	*2496 279	
8-37-89	SEAL, Low Oil Pressure Indicator Lamp Light, L		1	2291 974			
8-37-90	BEZEL, Speedometer and Instrument Cluster, V, W		1	2496 479	2496 599		
	L		1	2496 389	---- ---	---- ---	2496 929
	w/Accessory Switch Opening, L		1	2580 493			
	BEZEL, LENS and MASK, Instrument Cluster, R, P		1	---- ---	2587 258	2587 832	
	BEZEL, Speedometer Cluster, P-L, P-M, P-H		1	---- ---	---- ---	2587 245	
	BEZEL, Speedometer Cluster, Kilo, P		1	---- ---	---- ---	2587 247	
	BEZEL, Speedometer Cluster, P-P	8	1	---- ---	---- ---	2587 248	
	BEZEL, Instrument, Speedometer Mile and Fuel, D	8	1	---- ---	---- ---	2496 058	
	BEZEL, Instrument, Speedometer Kilo and Fuel, D	8	1	---- ---	---- ---	2496 059	
	BEZEL, Instrument, Ammeter and Temperature, D	8	1	---- ---	---- ---	2496 028	
8-37-98	MASK and DIAL, Instrument, w/Gearshift Indicator, C	8	1	---- ---	---- ---	2497 779	
	w/o Gearshift Indicator, C	8	1	---- ---	---- ---	2497 773	
8-37-127	VACUUM GAUGE, on Console, C-L 2 D. H.T., C-M, C-P, C-H	8	1	---- ---	---- ---	2580 179	
8-37-132	CONTACT, Vacuum Gauge Lamp Socket, C-L 2 D. H.T., C-M, C-P, C-H	8	1	---- ---	---- ---	2256 966	
8-37-135	HOSE, Vacuum Gauge, on Console, (sold by the inch), C-L 2 D. H.T., C-M, C-P, C-H	8	★	---- ---	---- ---	2275 215	
8-37-136	TEMPERATURE GAUGE, V, W, D		1	2496 502	2496 617	2496 019	
	L, P		1	2496 401	---- ---	2496 452	2496 964
8-37-138	TEE, Vacuum Gauge Hose, C-L 2 D. H.T., C-M, C-P, C-H	8	1	---- ---	---- ---	1886 109	

TYPE LETTERS Indicate: V - Valiant, L - Dart, R - Belvedere, W - Coronet, P - Plymouth, D - Dodge, C - Chrysler, Y - Imperial

★Indicates use as required. Numerals in parentheses ( ) refer to notes. Printed in U.S.A.

⊟Indicates parts not listed in any previous parts book. Prices and specifications subject to change without notice.

May 1965, Supersedes Nov. 30, 1964. * Indicates change or addition.

MyMopar.com

CODE	PART NAME AND DESCRIPTION	CYL	PER CAR	VALIANT / DART	PLYMOUTH BELVEDERE / DODGE CORONET	PLYMOUTH FURY / DODGE POLARA / CHRYSLER	IMPERIAL
8-37-0	**INSTRUMENT PANEL INSTRUMENTS - Cont'd**						
8-37-155	SENDING UNIT, Temperature Gauge		1	2426 458			
		6	1	---- ---	2426 458	2426 458	
	w/273 cu. in. Eng.	8	1	---- ---	2426 458		
	w/o Air Conditioning, except 273 cu. in. Eng.	8	1	---- ---	2426 458		
	w/Air Conditioning, except 273 cu. in. Eng.	8	1	---- ---	2426 459		
	w/318 cu. in. Eng., P, D	8	1	---- ---	---- ---	*2426 458	
	w/o Air Conditioning, except 318 cu. in. Eng.	8	1	---- ---	---- ---	2426 458	2426 458
	w/Air Conditioning, except 318 cu. in. Eng.	8	1	---- ---	---- ---	2426 459	2426 459
	SWITCH, Temperature Sending, w/240°, C	8	1	---- ---	---- ---	2497 551	2497 551
	SWITCH, Temperature Sending, w/246°, C	8	1	---- ---	---- ---	2580 242	2580 242
8-37-162	LENS, Speedometer and Instrument Cluster, Mile, C	8	1	---- ---	---- ---	2587 802	
	Kilo, C	8	1	---- ---	---- ---	2587 803	
8-37-178	HOUSING, Speedometer and Instrument Cluster, V, W		1	2496 510	2496 607		
	L, C		1	2496 398	---- ---	2587 804	
	Instrument Cluster, R, P		1	---- ---	2587 259	2587 833	
	Speedometer Cluster, P		1	---- ---	---- ---	2587 249	
	Instrument Panel Instrument, Primed, P		1	---- ---	---- ---	*2570 525	*2571 256
	Instrument, Ammeter and Temperature, D	8	1	---- ---	---- ---	2496 016	
	Instrument, Speedometer and Fuel, D	8	1	---- ---	---- ---	2496 073	
	Instrument Panel Instrument, Primed, w/o Trim Pad, D	8	1	---- ---	---- ---	*2571 023	
	Instrument Panel Instrument, Primed, w/Trim Pad, D	8	1	---- ---	---- ---	⊟2631 151	
8-37-188	SCREW, Speedometer and Instrument Cluster Housing to Bezel		5	2427 787			
	W		11	---- ---	1972 759		
	Speedometer Dial Lift Attaching to Housing, W		1	---- ---	1972 759		
	Instrument Bezel to Housing Mounting, P		4	---- ---	---- ---	*1972 757	
	Instrument Mounting, Ammeter and Temperature, to Instrument Panel Housing, D	8	3	---- ---	---- ---	6024 556	
	Instrument Panel Instrument Housing Attaching, D	8	8	---- ---	---- ---	6024 576	
	Speedometer and Instrument Cluster Mounting, C	8	4	---- ---	---- ---	6024 627	
	Speedometer and Instrument Cluster Lens Mounting, C	8	8	---- ---	---- ---	9422 342	
	Instrument Panel Instruments Housing to to Lower Reinforcement Attaching		4	---- ---	---- ---	---- ---	6023 984
	Instrument Panel Instruments Housing to Instrument Panel Upper Attaching		3	---- ---	---- ---	---- ---	6024 003
8-37-199	NUT, Speedometer and Instrument Cluster Mounting to Instrument Panel		4	---- ---	6023 387		
	Instrument Cluster to Panel Mounting, Upper, P		2	---- ---	---- ---	6022 952	
	Lower, P		2	---- ---	---- ---	6023 387	
	Instrument Panel Instrument Housing to Instrument Panel Attaching, P		4	---- ---	---- ---	6025 001	
	Instrument Panel Instrument Housing Attaching, D	8	8	---- ---	---- ---	6023 201	
	To Lower Reinforcement Attaching		4	---- ---	---- ---	---- ---	6025 001
	To Instrument Panel Upper Attaching		3	---- ---	---- ---	---- ---	6023 166
8-37-275	FUEL GAUGE, V, W, D		1	2496 501	2496 616	2496 087	
	L, P		1	2496 400	---- ---	2496 451	
	C	8	1	---- ---	---- ---	2496 237	2496 963
	w/Temperature Gauge, R.		1	---- ---	2496 693		

TYPE LETTERS Indicate: V - Valiant, L - Dart, R - Belvedere, W - Coronet, P - Plymouth, D - Dodge, C - Chrysler, Y - Imperial

★Indicates use as required. Numerals in parentheses ( ) refer to notes. Printed in U.S.A.
⊟Indicates parts not listed in any previous parts book. Prices and specifications subject to change without notice.
* Indicates change or addition.

MyMopar.com

CODE	PART NAME AND DESCRIPTION	CYL	PER CAR	VALIANT / DART	PLYMOUTH BELVEDERE / DODGE CORONET	PLYMOUTH FURY / DODGE POLARA / CHRYSLER	IMPERIAL
8-37-0	**INSTRUMENT PANEL INSTRUMENTS - Cont'd**						
8-37-316	OIL GAUGE		1	---- ---	---- ---	---- ---	2496 965
8-37-371	CLUSTER, Speedometer and Instrument,						
	Mile, Partial		1	---- ---	---- ---	---- ---	2580 889
	Kilo, Partial		1	---- ---	---- ---	---- ---	2580 890
8-37-372	SPEEDOMETER, Mile, V, R, P		1	2496 494	2496 706	2496 443	
	Kilo, V, R, P		1	2496 495	2496 707	2496 444	
	Mile, L, W, D		1	2496 408	2496 628	2496 078	
	Kilo, L, W, D		1	2496 409	2496 629	2496 079	
	Calibrated and Certified, Mile, R		1	---- ---	2496 708		
	Certified, W, P-L, P-M, P-H		1	---- ---	2496 630	2496 445	
	Certified, Mile, D	8	1	---- ---	---- ---	2496 080	
	Mile, C	8	1	---- ---	---- ---	2496 222	
	Kilo, C	8	1	---- ---	---- ---	2496 223	
8-37-381	GASKET, Speedometer Mounting to Housing,						
	V, W		1	2209 213	2209 213		
	Speedometer to Housing Mounting, R		1	---- ---	2209 213		
	Speedometer Mounting, C	8	1	---- ---	---- ---	2209 213	
8-37-387	GROMMET, Speedometer Mounting Screw,						
	V, C		2	2209 214	---- ---	2209 214	
	Speedometer to Housing Mounting Screw, R.		2	---- ---	2209 214		
	Speedometer Mounting to Housing, W		2	---- ---	2209 214		
8-37-458	CABLE, Odometer Reset, C	8	1	---- ---	---- ---	⊟2587 190	2497 105
8-37-459	NUT, Odometer Reset Cable Mounting, to Panel, C	8	1	---- ---	---- ---	1971 521	1971 521
8-37-463	BEZEL, Odometer Reset, Primed, C	8	1	---- ---	---- ---	2571 942	
8-37-499	SENDING UNIT, Tachometer, V, R-P, W-P, P-P, D-L 2 D. H.T. and Cv.Cp., D-P, C-L 2 D. H. T., C-M, C-P, C-H	8	1	*2497 556	*2497 556	*2497 556	
8-37-504	TACHOMETER, on Instrument Panel, V	8	1	2631 871			
	On Console, Replacement Only, R-P, W-P, P-P, D-L 2 D. H.T. and Cv.Cp., D-P, C-L 2 D. H. T., C-M, C-P, C-H	8	1	---- ---	*2496 979	*2496 979	
8-37-509	BEZEL, Floor Console Tachometer and Medallion Lens, R-P, W-P, P-P, D-P, C-L 2 D. H. T., C-M, C-P, C-H	8	1	---- ---	*2490 621	*2490 621	
8-37-512	SOCKET, Tachometer Indicator Lamp, on Console, V, R-P, W-P, P-P, D-L 2 D. H. T. and Cv. Cp., D-P, C-L 2 D. H. T., C-M C-P, C-H	8	1	*2097 003	*2097 003	*2097 003	
8-38-0	**GLOVE COMPARTMENT LAMP**						
8-38-4	BEZEL and LENS		1	---- ---	---- ---	---- ---	1819 441
8-38-23	LAMP, w/SWITCH		1	---- ---	2291 781	2291 781	2258 436
8-39-0	**HIGH BEAM INDICATOR LAMP**						
8-39-3	LAMP, D	8	1	---- ---	---- ---	⊟2497 666	

TYPE LETTERS Indicate: V - Valiant, L - Dart, R - Belvedere, W - Coronet, P - Plymouth, D - Dodge, C - Chrysler, Y - Imperial

★Indicates use as required. Numerals in parentheses ( ) refer to notes. Printed in U.S.A.
⊟Indicates parts not listed in any previous parts book. Prices and specifications subject to change without notice.
May 1965, Supersedes Nov. 30, 1964. * Indicates change or addition.

MyMopar.com

CODE	PART NAME AND DESCRIPTION	CYL	PER CAR	VALIANT / DART	PLYMOUTH BELVEDERE / DODGE CORONET	PLYMOUTH FURY / DODGE POLARA / CHRYSLER	IMPERIAL
8-39-0	**HIGH BEAM INDICATOR LAMP - Cont'd**						
8-39-15	SOCKET, on Printed Circuit Board, V, P, C		1	2496 279	2496 279	2496 279	
	L, D		1	2257 440	---- ---	2097 003	2257 440
8-40-0	**IGNITION LAMP**						
8-40-5	LAMP, D	8	1	---- ---	---- ---	2580 139	
8-40-16	SOCKET, Ignition Switch Lamp, C	8	1	---- ---	---- ---	2097 003	
8-41-0	**INSTRUMENT PANEL LAMP**						
8-41-35	DIFFUSER, Instrument Panel Clock Lamp, P, C		1	---- ---	---- ---	2427 533	
	Headlamp Title Lamp Light, D-H, D-P	8	1	---- ---	---- ---	2427 533	
	w/Wiper and Cigar Lighter Title Lamp Light, D-L, D-P	8	1	---- ---	---- ---	2427 533	
	Speedometer and Instrument Lamp		8	---- ---	---- ---	---- ---	2427 533
	Instrument Panel Instrument Housing		5	---- ---	---- ---	---- ---	2427 533
8-41-36	SOCKET, Instrument Lamp, on Printed Circuit Board, V		3	2496 279			
	L		3	2257 440			
	R		6	---- ---	2496 279		
	W		4	---- ---	2496 279		
	P		2	---- ---	---- ---	2496 279	
	C	8	5	---- ---	---- ---	2496 279	
			2	---- ---	---- ---	---- ---	2257 440
	Speedometer Cluster Illuminated Lamp, on Printed Circuit Board, P		3	---- ---	---- ---	2496 279	
	Instrument Lamp, on Printed Circuit Board, Ammeter and Temperature, D	8	3	---- ---	---- ---	2496 279	
	Speedometer and Fuel, D.	8	2	---- ---	---- ---	2496 279	
	Speedometer and Instrument Lamp		6	---- ---	---- ---	---- ---	2097 003
8-42-0	**MAP AND COURTESY LAMP**						
8-42-1	LAMP, Map, D-L, D-H	8	1	---- ---	---- ---	2497 639	
8-42-2	BRACKET and LENS, Map and Courtesy Lamp, Cv.Cp.		1	2496 317	2496 317		
8-42-5	LENS PACKAGE, Map Lamp, D-L, D-H	8	1	---- ---	---- ---	2584 964	
	LENS, Map and Courtesy Lamp, C	8	1	---- ---	---- ---	1971 879	
8-42-10	SOCKET, Map and Courtesy Lamp, Cv.Cp.		1	1314 619	1314 619		
	Map Lamp, D-L, D-H	8	1	---- ---	---- ---	2426 141	1704 467
	Map Lamp, C	8	1	---- ---	---- ---	1314 619	
8-42-12	CONTACT, Map and Courtesy Lamp Socket, Cv. Cp.		2	2256 966	2256 966		
	Map Lamp Socket, D-L, D-H, C	8	2	---- ---	---- ---	2256 966	
8-42-25	SWITCH, Map and Courtesy Lamp, w/Power Antenna Switch, C	8	1	---- ---	---- ---	2257 429	
	w/BEZEL, Map Lamp, w/o Power Antenna Switch, C	8	1	---- ---	---- ---	2580 284	
	w/BEZEL, Map Lamp, w/Power Antenna Switch, C	8	1	---- ---	---- ---	2580 285	

TYPE LETTERS Indicate: V - Valiant, L - Dart, R - Belvedere, W - Coronet, P - Plymouth, D - Dodge, C - Chrysler, Y - Imperial

★Indicates use as required. Numerals in parentheses ( ) refer to notes. Printed in U.S.A.
⊖Indicates parts not listed in any previous parts book. Prices and specifications subject to change without notice.
* Indicates change or addition.

MyMopar.com

CODE	PART NAME AND DESCRIPTION	CYL	PER CAR	VALIANT / DART	PLYMOUTH BELVEDERE / DODGE CORONET	PLYMOUTH FURY / DODGE POLARA / CHRYSLER	IMPERIAL
8-42-0	**MAP AND COURTESY LAMP - Cont'd**						
8-42-29	BEZEL, Map Lamp, w/Power Antenna Switch .		1	---- ---	---- ---	---- ---	2497 135

8-44-0 BULBS

8-44-1 BULB

BASE CONTACT	CANDLE POWER	VENDOR LAMP NO.	PART NO.	BASE CONTACT	CANDLE POWER	VENDOR LAMP NO.	PART NO.
Single	1	51	115 273				
Single	1	53	131 282	Double	32-32	1000	142 307
Single	1	53X	152 280	Single	15	1003	151 577
Single	2	57	127 934	Double	15	1004	151 578
Single	3	63	142 303	Double	32-4	1034	151 567
Double	3	64	142 311	Double	32-4	1034A	9418 772
Single	4	67	142 450	Single	32	1073	151 576
Single	4	67AF	9420 830	Single	4	1095	9418 903
Double	4	68	142 451	Single	21	1129	142 308
Single	6	81	142 306	Double	21	1130	142 447
Single	6	82	142 312	Single	21	1141	142 456
Single	15	87	142 304	Double	21	1142	142 457
Double	15	88	142 446	Double	21-3	1154	145 416
Single	6	89	142 452	Single	4	1155	9417 865
Double	6	90	142 453	Single	32	1156	9417 866
				Double	32	1157	9417 867
Single	15	93	142 454	Double	32	1157A	9419 780
Double	15	94	142 455	Double	21-3	1158	142 449
Single	2	158	9415 969	Single	15	1445	274 004
Single	15	209	151 579	Single	10	1813	274 148
Double	15	210	151 559	Single	33	1816	152 240
Single	14	256	9420 536	Single	2	1891	152 244
Single	2	257	9412 348	Single	1	1892	274 020
				Single	14	1893	9416 927

CODE	PART NAME AND DESCRIPTION	CYL	PER CAR	VALIANT / DART	PLYMOUTH BELVEDERE / DODGE CORONET	PLYMOUTH FURY / DODGE POLARA / CHRYSLER	IMPERIAL
8-47-0	**LICENSE MOUNTING PARTS**						
8-47-8	BRACKET, Front License Plate, V.		2	2404 526			
	Front, L		2	2461 174			
	Front, R, P		1	---- ---	2404 698	2404 698	
	Front, D, C	8	1	---- ---	---- ---	2461 450	2404 629
	Rear, except Sta. Wgn., C	8	1	---- ---	---- ---	2461 451	
8-47-14	SCREW and WASHER, Front License Plate to Bumper, V		2	6024 179	6024 179	6024 179	6024 179
8-47-15	NUT, Front License Plate to Bumper, V. . . .		2	6023 925	6023 925	6023 925	6023 925
	NUT and WASHER, Front License Plate Bracket to Body.		2	6023 271			
	NUT and WASHER, Front License Plate to Bracket		2	6023 271	---- ---	6023 271	6023 271
	NUT and WASHER, Front License Plate Bracket to Bumper, L		2	6023 271	---- ---	6023 271	6023 271

TYPE LETTERS Indicate: V - Valiant, L - Dart, R - Belvedere, W - Coronet, P - Plymouth, D - Dodge, C - Chrysler, Y - Imperial

★Indicates use as required. Numerals in parentheses ( ) refer to notes. Printed in U.S.A.

⊟Indicates parts not listed in any previous parts book. Prices and specifications subject to change without notice.

March 1966 Supersedes May 1965. • Indicates change or addition.

MyMopar.com

CODE	PART NAME AND DESCRIPTION	CYL	PER CAR	VALIANT / DART	PLYMOUTH BELVEDERE / DODGE CORONET	PLYMOUTH FURY / DODGE POLARA / CHRYSLER	IMPERIAL
8-47-0	**LICENSE MOUNTING PARTS - Cont'd**						
8-47-21	BUTTON, Front License Plate to Bumper, W, D		1	---- ---	1943 547	1943 547	
8-47-57	FRAME, Rear License Plate		1	2495 133	2495 133	2495 133	2495 133
8-47-67	SPRING, License Plate Mounting Panel Hinge, except Sta. Wgn.		1	---- ---	1960 131		
	License Plate Mounting Panel, except Sta. Wgn., D	8	1	---- ---	---- ---	1960 131	
8-47-68	PANEL, License Plate Protector, Sta. Wgn.		1	2422 843			
	License Plate, except Sta. Wgn., L		1	2422 848			
	License Plate Mounting, Partial, except Sta. Wgn.		1	---- ---	2188 619		
	License Plate Mounting, to Rear Bumper, except Sta. Wgn., D	8	1	---- ---	---- ---	2461 457	
8-47-69	HINGE, License Plate Mounting Panel, except Sta. Wgn., R		1	---- ---	2244 894		
	Except Sta. Wgn., W		1	---- ---	2526 613		
8-47-76	PIN, License Plate Mounting Panel Hinge, except Sta. Wgn., D		1	---- ---	1960 127	*1960 127	
8-47-126	BUMPER, Rear License Plate to Body		2	2094 618			
	Rear License Plate Mounting Panel, except Sta. Wgn., R, D		2	---- ---	2094 618	1943 547	
	Rear License Plate Mounting Panel Hinge, except Sta. Wgn., W		2	---- ---	2528 351		
	Rear License Plate to Bumper, Sta. Wgn., D.		1	---- ---	*1943 547	*1943 547	
	P		1	---- ---	---- ---	*1943 547	
	Rear License Plate to Body, except Sta. Wgn., D	8	2	---- ---	---- ---	1943 547	
8-47-130	SCREW and WASHER, Rear License Plate to Body		2	6024 179			
	SCREW and WASHER, Rear License Plate to Bumper, Sta. Wgn.		2	---- ---	6024 179		
	SCREW and WASHER, Rear License Plate to Bumper		2	---- ---	---- ---	6024 179	6024 179
8-47-131	NUT, Rear License Plate to Body		2	6023 925			
	NUT, Rear License Plate to Bumper, Sta. Wgn.		2	---- ---	6023 925		
	NUT, Rear License Plate to Bumper		2	---- ---	---- ---	6023 925	6023 925
	NUT and WASHER, Rear License Plate to Body, except Sta. Wgn.		4	---- ---	6023 271		
	NUT and WASHER, Rear License Plate Bracket to Bumper, except Sta. Wgn., C	8	2	---- ---	---- ---	6023 271	
8-50-0	**PARKING AND TURN SIGNAL LAMP**						
8-50-82	SWITCH, Turn Signal		1	2631 383	2631 383		
	w/o Adjustable Tilt Steering Wheel		1	---- ---	---- ---	2631 383	2631 383
	w/Adjustable Tilt Steering Wheel		1	---- ---	---- ---	2496 192	2496 192
8-50-114	CABLE, Turn Signal Switch Cancelling, w/Adjustable Tilt Steering Wheel, P, D		1	---- ---	---- ---	⊟2660 217	
	C	8	1	---- ---	---- ---	⊟2660 218	⊟2660 219
8-50-126	CAM, Turn Signal Switch Cancelling		1	2258 704	2258 704		
	w/o Adjustable Tilt Steering Wheel		1	---- ---	---- ---	2258 704	2258 704

TYPE LETTERS Indicate: V - Valiant, L - Dart, R - Belvedere, W - Coronet, P - Plymouth, D - Dodge, C - Chrysler, Y - Imperial

★Indicates use as required. Numerals in parentheses ( ) refer to notes. Printed in U.S.A.

⊟Indicates parts not listed in any previous parts book. Prices and specifications subject to change without notice.

* Indicates change or addition.

MyMopar.com

CODE	PART NAME AND DESCRIPTION	CYL	PER CAR	VALIANT / DART	PLYMOUTH BELVEDERE / DODGE CORONET	PLYMOUTH FURY / DODGE POLARA / CHRYSLER	IMPERIAL
8-50-0	**PARKING AND TURN SIGNAL LAMP - Cont'd**						
8-50-126	PLUNGER, Turn Signal Switch Cancelling Cam and Horn Contact, w/Adjustable Tilt Steering Wheel		1	---- ---	---- ---	2580 903	2580 912
8-50-129	LEVER, w/KNOB, Turn Signal		1	2580 226	2580 226		
	w/Adjustable Tilt Steering Wheel		1	---- ---	---- ---	*2580 914	2580 914
	w/o Adjustable Tilt Steering Wheel		1	---- ---	---- ---	2580 226	2580 227
8-50-130	SCREW, Turn Signal Lever Mounting		1	6024 629	6024 629	6024 629	6024 629
8-50-132	RETAINER, Turn Signal Cancelling Cam, w/Tilt Steering Wheel	8	1	---- ---	---- ---	⊟2580 905	⊟2580 905
8-50-156	SOCKET, Turn Signal Indicator Lamp, on Printed Circuit Board, V		1	2496 279			
	L, C-L, C-M		2	2257 440	2496 279	2496 279	
	P		2	---- ---	---- ---	2097 003	2097 003
	D-L, D-H	8	2	---- ---	---- ---	2496 279	
	Front Fender Turn Signal Indicator Lamp, D-P	8	2	---- ---	---- ---	2497 837	
	SOCKET and INSULATOR PACKAGE, Front Fender Turn Signal Indicator Lamp, C	8	2	---- ---	---- ---	2584 971	
	SOCKET and CABLE, Front Fender Turn Signal Indicator Lamp, C-M, C-P, C-H	8	2	---- ---	---- ---	*2580 163	
8-50-159	CONTACT, Front Fender Turn Signal Indicator Lamp Socket, D-P, C	8	2	---- ---	---- ---	2256 966	
	Sentry Signal Lamp Socket		1	---- ---	---- ---	---- ---	2256 966
8-50-170	LENS and GASKET PACKAGE, Front Fender Turn Signal Indicator Lamp, D-P	8	1	---- ---	---- ---	2584 961-2	
8-50-175	LAMP PACKAGE, Front Fender Turn Signal Indicator, D-P	8	1	---- ---	---- ---	2584 959-60	
	C-L, C-M, C-H	8	1	---- ---	---- ---	2584 957-8	
	C-P	8	1	---- ---	---- ---	2585 152-3	
8-50-186	FLASHER, Turn Signal, Two Lamp, D		1	2584 854	2584 854	2584 854	2584 854
	Two Lamp, P-L, P-M, C Sta. Wgn.		1	---- ---	---- ---	2584 854	
	Three Lamp, P-H, P-P		1	---- ---	---- ---	2426 865	
	Except Sta. Wgn., used w/one Bulb Type Tail Lamp, C	8	1	---- ---	---- ---	2584 854	
	Except Sta. Wgn., used w/two Bulb Type Tail Lamp, C	8	1	---- ---	---- ---	2426 865	
8-50-191	CLIP, Turn Signal Flasher Mounting		1	2426 194	2426 194	2426 194	2426 194
8-50-218	WIRING, Turn Signal Switch Jumper, w/Adjustable Tilt Steering Wheel		1	---- ---	---- ---	2631 305	2631 305
8-50-303	LAMP, Parking and Turn Signal, V except Barracuda, R, C		1	2424 862-3	2483 814-5	2575 064-5	2575 088-9
	V Barracuda, W, P		1	2449 986-7	2449 470-1	2483 262-3	
	L		1	2483 808-9			
	D	8	2	---- ---	---- ---	2483 330	
	WASHER, L, P, C		4	6022 704	6022 704	6022 704	
	NUT and WASHER		6	---- ---	---- ---	---- ---	6023 202
8-50-305	BRACKET, Attaching, V except Barracuda		1	2524 046-7			
	Mounting, D	8	2	---- ---	---- ---	2483 335	
8-50-308	GASKET		2	---- ---	---- ---	---- ---	2424 902

TYPE LETTERS Indicate: V - Valiant, L - Dart, R - Belvedere, W - Coronet, P - Plymouth, D - Dodge, C - Chrysler, Y - Imperial

★Indicates use as required. Numerals in parentheses ( ) refer to notes. Printed in U.S.A.

⊟Indicates parts not listed in any previous parts book. Prices and specifications subject to change without notice.

March 1966 Supersedes May 1965.

MyMopar.com

* Indicates change or addition.

CODE	PART NAME AND DESCRIPTION	CYL	PER CAR	VALIANT / DART	PLYMOUTH BELVEDERE / DODGE CORONET	PLYMOUTH FURY / DODGE POLARA / CHRYSLER	IMPERIAL
8-50-0	**PARKING AND TURN SIGNAL LAMP - Cont'd**						
8-50-312	HOUSING PACKAGE		1	---- ---	---- ---	---- ---	⊟2448 647-8
8-50-315	BEZEL, V Barracuda		1	2524 516-7			
8-50-334	LENS and GASKET PACKAGE, Amber, V except Barracuda		1	2448 825-6			
	Right, Clear, V except Barracuda, P		1	2275 212	---- ---	2525 258	2448 651
	Left, Clear, V except Barracuda, P		1	2275 211	---- ---	2525 259	2448 652
	V Barracuda		2	2525 662			
	Amber, L		1	2525 518-9			
	Clear, Export, L		1	2525 520-1			
	R		1	---- ---	2525 684-5		
	Right, W		1	---- ---	2525 649		
	Left, W		1	---- ---	2525 650		
	C	8	1	---- ---	---- ---	2525 676-7	
	LENS, COLLIMATOR and GASKET PACKAGE, D	8	2	---- ---	---- ---	2525 257	
8-50-337	SCREW, Lens Attaching, V except Barracuda, 1" long		2	6023 141			
	SCREW, Lens Attaching, V except Barracuda, 3/4" long		2	6024 164			
	SCREW, Lamp to Grille, V Barracuda		2	6025 039			
	SCREW, Lens Attaching, V Barracuda		6	1961 965			
	SCREW, Lens Attaching, L, R, P, C		4	⊟9422 165	⊟9422 165	⊟9422 165	6023 292
	SCREW, Lens Attaching, D	8	4	---- ---	---- ---	6024 427	
	SCREW, Lamp Attaching, Upper		2	---- ---	---- ---	---- ---	6024 496
	SCREW, Lamp		★	---- ---	---- ---	---- ---	6025 057
8-50-338	GASKET, Lens, V Barracuda		2	2524 519			
	V except Barracuda		2	2480 821			
	L, R, P		2	2445 998	2449 670	2483 270	
	W, D		2	---- ---	2449 662	2483 336	
	C	8	2	---- ---	---- ---	2243 158	
8-50-349	SOCKET and CABLE, V except Barracuda, L, W		2	1903 517	1903 517		
	SOCKET PACKAGE		2	---- ---	---- ---	---- ---	2525 669
8-50-354	SPRING, INSULATOR and CONTACT PACKAGE, Socket		★	2584 972	2584 972	2584 972	2584 972
8-52-0	**STARTING MOTOR**						
8-52-4	STARTING MOTOR, w/170 cu. in. Eng.	6	1	2098 500			
	w/225 cu. in. Eng.	6	1	2095 150			
		8	1	2095 150			
			1	---- ---	2095 150	2095 150	2095 150
	w/Manual Trans., 11" Clutch, Taxi	6	1	---- ---	1889 100	1889 100	
8-52-8	SHIELD, Trans. Core to Starter Motor, w/Auto. Trans., Police and Taxi	6	1	---- ---	2125 014	2125 014	
8-52-39	SEAL, Cylinder Block to Starter		1	2129 234	2129 234	2129 234	2129 234
8-52-328	RELAY, Starter, w/Manual Trans., P, D, C-L, C-M, C-P		1	2444 516	2444 516	2444 453	
	w/Auto. Trans.		1	2444 517	2444 517	2444 442	2444 517
	w/11" Clutch, Taxi, w/Manual Trans.	6	1	---- ---	2444 453	2444 453	
	SCREW, Mounting		2	6006 120	6006 120	6006 120	6006 120
8-52-357	CABLE, Starting Motor to Starter Relay to Terminal Block, w/426 cu. in. Eng., Hemispherical, except Sta. Wgn.	8	1	---- ---	2580 469		

TYPE LETTERS Indicate: V - Valiant, L - Dart, R - Belvedere, W - Coronet, P - Plymouth, D - Dodge, C - Chrysler, Y - Imperial

★Indicates use as required. Numerals in parentheses ( ) refer to notes. Printed in U.S.A.
⊟Indicates parts not listed in any previous parts book. Prices and specifications subject to change without notice.
* Indicates change or addition.

March 1966 Supersedes May 1965.
MyMopar.com

CODE	PART NAME AND DESCRIPTION	CYL	PER CAR	VALIANT / DART	PLYMOUTH BELVEDERE / DODGE CORONET	PLYMOUTH FURY / DODGE POLARA / CHRYSLER	IMPERIAL
8-52-0	**STARTING MOTOR - Cont'd**						
8-52-369	GROMMET, Starter Frame, w/1889 100 Starter	6	1	---- ---	1889 362	1889 362	
8-52-395	SEALING WASHER, Starter Solenoid, w/1889 100 Starter	6	2	---- ---	---- ---	1658 571	

8-52-0 STARTING MOTOR COMPONENT PARTS

FOR MODEL APPLICATION SEE CODE 8-52-4

CODE	NAME	STARTER ASSEMBLIES 1889 100	2095 150	2098 500
8-52-5	SCREW and WASHER, Mounting Upper	---- ---	*6023 899	*6023 899
	STUD, Mounting Lower	---- ---	2095 875	2095 875
8-52-41	CLUTCH	2444 661	*2444 658	*2444 658
8-52-49	FORK and PIN PACKAGE, Shifting	2084 093	---- ---	---- ---
	FORK, Shifting	---- ---	2095 134	2095 134
8-52-50	PIN, Shifting Fork Pivot	456 098	2095 133	2095 133
8-52-61	RING, Clutch Actuator Retaining	---- ---	2095 130	2095 130
8-52-67	SNAP RING, Clutch Drive Sleeve	2095 350	---- ---	---- ---
	SNAP RING, Pinion Shaft Gear Retaining	---- ---	2095 117	2095 117
8-52-76	HOUSING, Pinion	1889 066	---- ---	---- ---
	HOUSING, Gear	---- ---	2095 112	2095 112
8-52-80	BEARING, Pinion Housing End Head (2 req.)	*2098 986	*2098 986	*2098 986
	BEARING, Pinion Housing Drive Shaft	---- ---	2098 987	2098 987
8-52-82	STOP, SNAP RING and STOP WASHER PACKAGE, Pinion	2448 804	---- ---	---- ---
8-52-87	ACTUATOR and RETAINING RING PACKAGE, Clutch Shifting	---- ---	2275 556	2275 556
8-52-88	BOOT, Shifting Fork	1889 147	---- ---	---- ---
8-52-89	SHAFT, Pinion	---- ---	2095 118	2095 118
8-52-96	GEAR and SNAP RING PACKAGE, Pinion Shaft	---- ---	2275 557	2275 557
8-52-98	THRUST WASHER and RETAINING RING PACKAGE, Pinion Shaft	---- ---	2275 558	2275 558
8-52-100	RING, Pinion Shaft Retaining	---- ---	6022 006	6022 006
8-52-101	COVER, Gear Housing	---- ---	2095 116	2095 116
8-52-102	WASHER, Pinion Shaft Gear	2095 114	2095 114	2095 114
8-52-120	ARMATURE	1889 079	2095 094	2098 496
8-52-121	THRUST WASHER PACKAGE, Armature	---- ---	2275 555	2275 555
8-52-135	BRUSH PACKAGE	2525 529	---- ---	---- ---
8-52-137	PLATE and BRUSH PACKAGE, Brush Holder	---- ---	2275 550	2275 550

TYPE LETTERS Indicate: V - Valiant, L - Dart, R - Belvedere, W - Coronet, P - Plymouth, D - Dodge, C - Chrysler, Y - Imperial

★Indicates use as required. Numerals in parentheses ( ) refer to notes. Printed in U.S.A.
⊟Indicates parts not listed in any previous parts book. Prices and specifications subject to change without notice.
March 1966 Supersedes May 1965. * Indicates change or addition.

MyMopar.com

8-52-0 STARTING MOTOR COMPONENT PARTS - Cont'd

FOR MODEL APPLICATION SEE CODE 8-52-4

CODE	NAME	STARTER ASSEMBLIES 1889 100	2095 150	2098 500
8-52-140	SPRING PACKAGE, Brush	2084 666	2084 666	2084 666
8-52-142	SEALER, Brush Plate	---- ---	2421 838	2421 838
8-52-150	HOLDER, Brush	*1889 044	---- ---	---- ---
8-52-176	HEAD, Commutator End	1889 363	2095 076	2095 076
8-52-180	THRUST WASHER PACKAGE, Commutator End	2240 529	---- ---	---- ---
8-52-214	FIELD SERIES and SHUNT COIL PACKAGE	2084 088	2275 248	2421 474
	COIL, Field Series, Complete	---- ---	2095 085	---- ---
	WASHER, Field Series Coil Ground	---- ---	---- ---	9418 398
8-52-227	RIVET, Field Series Coil Ground	---- ---	6024 244	6024 244
8-52-241	SCREW, Thru (2 req.)	*1889 080	*2095 105	*2095 105
8-52-341	CONTACT and COVER GASKET PACKAGE, Solenoid	2084 091	---- ---	---- ---
8-52-342	CONTACT and SPRING PACKAGE, Solenoid Switch	---- ---	2275 553	2275 553
8-52-344	COVER and GASKET PACKAGE, Solenoid	2084 090	---- ---	---- ---
8-52-345	SOLENOID PACKAGE	1889 146	2275 554	2275 554
8-52-346	SCREW and WASHER, Solenoid Terminal	---- ---	*2426 920	---- ---
8-52-354	STUD PACKAGE, Terminal Relay	2084 094	2421 837	2421 837
8-52-372	STUD and WASHER PACKAGE, Solenoid Terminal	*2275 551	2275 551	2275 551
8-52-375	CORE, Solenoid Moving	1889 151	2095 155	2095 155
8-52-389	SEAL, Solenoid Contact	---- ---	2098 660	2098 660

CODE	PART NAME AND DESCRIPTION	CYL	PER CAR	VALIANT / DART	PLYMOUTH BELVEDERE / DODGE CORONET	PLYMOUTH FURY / DODGE POLARA / CHRYSLER	IMPERIAL
8-53-0	**SWITCHES**						
8-53-150	SWITCH, Foot Dimmer		1	1881 938	1881 938	1881 938	1881 938
	GROMMET, Front Floor Covering Dimmer Switch		1	2292 474	2292 474	2292 474	2292 474
8-53-154	SCREW, Foot Dimmer Switch Mounting		2	6024 699	6024 699	6024 699	6024 699
8-53-270	SWITCH, Headlamp and Instrument Lamp, R		1	2584 926	2584 927	2584 928	2584 929
	W-L, W-H		1	---- ---	2298 855		
	W-P	8	1	---- ---	2497 778		
	Headlamp Sentinel, C	8	1	---- ---	---- ---	2587 507	
8-53-271	NUT, Headlamp Switch		1	---- ---	---- ---	---- ---	1971 521
8-53-274	ESCUTCHEON, Headlamp Sentinel Switch, C	8	1	---- ---	---- ---	2587 494	

TYPE LETTERS Indicate: V - Valiant, L - Dart, R - Belvedere, W - Coronet, P - Plymouth, D - Dodge, C - Chrysler, Y - Imperial

★Indicates use as required. Numerals in parentheses ( ) refer to notes. Printed in U.S.A.
⊟Indicates parts not listed in any previous parts book. Prices and specifications subject to change without notice.
* Indicates change or addition.

MyMopar.com

CODE	PART NAME AND DESCRIPTION	CYL	PER CAR	VALIANT / DART	PLYMOUTH BELVEDERE / DODGE CORONET	PLYMOUTH FURY / DODGE POLARA / CHRYSLER	IMPERIAL
8-53-0	**SWITCHES - Cont'd**						
8-53-294	BEZEL, Headlamp and Instrument Lamp Switch Mounting, L, W, C		1	*2497 249	*2497 249	*2497 620	
	R, P		1	---- ---	*2256 432	⊟2496 762	
	w/o Air Conditioning, D	8	1	---- ---	---- ---	2497 249	
	w/Air Conditioning, D	8	1	---- ---	---- ---	2580 146	
8-53-296	KNOB, Headlamp and Instrument Lamp Switch, L, W, P		1	2496 791	2496 791	2580 159	
	V, R, C		1	2497 271	2497 272	2496 681	2426 655
	w/o Air Conditioning, D	8	1	---- ---	---- ---	2580 149	
	w/Air Conditioning, D	8	1	---- ---	---- ---	2580 150	
	Headlamp Sentinel Switch, C	8	1	---- ---	---- ---	2587 493	
8-53-301	AMPLIFIER, Headlamp Sentinel, C	8	1	---- ---	---- ---	2587 491	
8-53-303	BRACKET, Headlamp Sentinel Amplifier Mounting, C	8	1	---- ---	---- ---	2587 559	
8-53-304	PHOTOCELL PACKAGE, Headlamp Sentinel, for Replacement Only, C	8	1	---- ---	---- ---	⊟2586 764	
8-53-305	SPRING CLIP, Headlamp entinel Photocell Retainer, C	8	1	---- ---	---- ---	1327 986	
8-53-312	RETAINER, Headlamp and Instrument Lamp Switch Mounting, V, R, C		1	*1887 604	*1887 604	*2496 766	
8-53-327	SWITCH, Oil Pressure	6	1	*2585 110	*2585 110	*2585 110	
	SENDING UNIT, Oil Pressure	8	1	1818 830	1818 830	1818 830	2495 222
	SWITCH, Oil Pressure	8	1	---- ---	---- ---	---- ---	2497 562
8-55-0	**TAIL, STOP AND TURN SIGNAL LAMP**						
8-55-1	LAMP PACKAGE, Tail, Sta. Wgn., L		1	2525 692-3			
	w/Back-Up Lamp, Sta. Wgn., L		1	2584 852-3			
	w/o Back-Up Lamp, Sta. Wgn., L, W.		1	2584 850-1	2584 862-3		
	Right, w/Back-Up Lamp, except Sta. Wgn., W-L, W-H		1	---- ---	⊟2585 119		
	Left, w/Back-Up Lamp, except Sta. Wgn., W-L, W-H		1	---- ---	⊟2585 120		
	Quarter Panel Tail, Stop and Turn Signal, Sta. Wgn., P		1	---- ---	---- ---	2525 543-4	
	Right, Tailgate Tail, Stop and Turn Signal, Sta. Wgn., P		1	---- ---	---- ---	2525 539	
	Left, Tailgate Tail, Stop and Turn Signal, Sta. Wgn., P		1	---- ---	---- ---	2525 540	
	Tail, Sta. Wgn., D	8	2	---- ---	---- ---	2584 888	
	w/o Back-Up Lamp, Sta. Wgn., D	8	2	---- ---	---- ---	2584 886	
	Right, Tail, Sta. Wgn., C-L, C-H	8	1	---- ---	---- ---	*2584 879	
	Left, Tail, Sta. Wgn., C-L, C-H	8	1	---- ---	---- ---	*2584 880	
	Tail, Stop and Turn Signal, Sta. Wgn., C-L, C-H	8	1	---- ---	---- ---	*2584 871-2	
8-55-7	LAMP, Tail, Stop, Turn Signal and Back-Up, except Sta. Wgn., L		1	2524 350-1			
	w/o Back-Up Lamp, except Sta. Wgn., L, P.		1	2524 370-1	---- ---	2483 368-9	
	Tail, except Sta. Wgn., L		1	2524 376-7			

TYPE LETTERS Indicate: V - Valiant, L - Dart, R - Belvedere, W - Coronet, P - Plymouth, D - Dodge, C - Chrysler, Y - Imperial

★Indicates use as required. Numerals in parentheses ( ) refer to notes. Printed in U.S.A.

⊟Indicates parts not listed in any previous parts book. Prices and specifications subject to change without notice.

March 1966 Supersedes May 1965. * Indicates change or addition.

MyMopar.com

CODE	PART NAME AND DESCRIPTION	CYL	PER CAR	VALIANT / DART	PLYMOUTH BELVEDERE / DODGE CORONET	PLYMOUTH FURY / DODGE POLARA / CHRYSLER	IMPERIAL
8-55-0	**TAIL, STOP AND TURN SIGNAL LAMP - Cont'd**						
8-55-7	LAMP - Cont'd						
	w/o Back-Up Lamp, except Sta. Wgn., R-L		2	---- ---	2483 394		
	w/o Back-Up Lamp, except Sta. Wgn., R-H, R-P		2	---- ---	2483 395		
	w/Back-Up Lamp, W-P	8	1	---- ---	⊟2585 150-1		
	w/o Back-Up Lamp, except Sta. Wgn., P-H, P-P		1	---- ---	---- ---	2483 366-7	
	w/o Back-Up Lamp, except Sta. Wgn., D-L, D-H	8	1	---- ---	---- ---	2483 372-3	
	w/o Back-Up Lamp, D-P	8	1	---- ---	---- ---	2524 396-7	
	w/Back-Up Lamp, except Sta. Wgn., w/one Bulb Type, C-L, C-M, C-P	8	1	---- ---	---- ---	2449 500-1	
	w/Back-Up Lamp, except Sta. Wgn., w/two Bulb Type, C	8	1	---- ---	---- ---	*2575 188-9	
	w/o Back-Up Lamp, except Sta. Wgn., w/one Bulb Type, C-L, C-M	8	1	---- ---	---- ---	2483 374-5	
	w/o Back-Up Lamp, except Sta. Wgn., w/two Bulb Type, C-L, C-M	8	1	---- ---	---- ---	2575 238-9	
	w/Back-Up Lamp, except Sta. Wgn., w/one Bulb Type, C-H	8	1	---- ---	---- ---	2483 370-1	
	w/Back-Up Lamp		1	---- ---	---- ---	---- ---	2423 348-9
8-55-8	GASKET, Tail, Stop and Turn Signal Lamp Housing, except Sta. Wgn., R		2	---- ---	2445 982		
	Sta. Wgn., R		2	---- ---	2449 634		
	Except Sta. Wgn., W		1	---- ---	2524 730-1		
8-55-9	J-NUT, Tail, Stop, Turn Signal and Back-Up Lamp Mounting, Sta. Wgn., V		6	6014 023			
	NUT and WASHER, Tail, Stop, Turn Signal and Back-Up Lamp Mounting, Lower, except Sta. Wgn., V		6	6023 202			
	NUT, Tail, Stop and Turn Signal Lamp Mounting, except Sta. Wgn., L		8	6023 202			
	NUT, Tail Lamp Mounting, except Sta. Wgn., L		8	6023 202			
	J-NUT, Tail Lamp Mounting, Sta. Wgn., L		6	6014 023			
	J-NUT, Tail, Stop and Turn Signal Lamp Mounting, Sta. Wgn., L		6	6014 023			
	J-NUT, Tail, Stop and Turn Signal Lamp Mounting, Sta. Wgn., R		8	---- ---	6023 111		
	NUT, Deck Lid Tail, Stop and Turn Signal Lamp Mounting, except Sta. Wgn., P-H, P-P.		8	---- ---	---- ---	6024 113	
	J-NUT, Tail, Stop and Turn Signal Lamp to Quarter Panel, Sta. Wgn., D	8	8	---- ---	---- ---	6023 111	
	NUT, Tail, Stop and Turn Signal Lamp Attaching, except Sta. Wgn., P, D	8	8	---- ---	---- ---	6023 204	
	STAMPED NUT, w/Back-Up Lamp, except Sta. Wgn., C	8	12	---- ---	---- ---	6024 152	
	NUT and WASHER, w/Back-Up Lamp Attaching		6	---- ---	---- ---	---- ---	6023 205
8-55-12	SEALING WASHER, Tail, Stop, Turn Signal and Back-Up Lamp to Body, except Sta. Wgn., W	8	4	---- ---	6022 052		
	Tail, Stop and Turn Signal Lamp, 2 D. and 4 D., W-L		4	---- ---	6022 052		
	CUP WASHER, Tail, Stop and Turn Signal Lamp Mounting, except Sta. Wgn., P-H, P-P		4	---- ---	---- ---	6023 185	
8-55-18	CLIP, Tail Lamp Snap on, except Sta. Wgn., L		2	6015 377			

TYPE LETTERS Indicate: V - Valiant, L - Dart, R - Belvedere, W - Coronet, P - Plymouth, D - Dodge, C - Chrysler, Y - Imperial

★Indicates use as required. Numerals in parentheses ( ) refer to notes. Printed in U.S.A.

⊟Indicates parts not listed in any previous parts book. Prices and specifications subject to change without notice.

* Indicates change or addition. March 1966 Supersedes May 1965.

MyMopar.com

8-55-0 TAIL, STOP AND TURN SIGNAL LAMP - Cont'd

CODE	PART NAME AND DESCRIPTION	CYL	PER CAR	VALIANT / DART	PLYMOUTH BELVEDERE / DODGE CORONET	PLYMOUTH FURY / DODGE POLARA / CHRYSLER	IMPERIAL
8-55-23	REINFORCEMENT, Tail Lamp Opening, except Sta. Wgn., R, D		1	---- ---	2484 822-3	2482 138-9	
	Except Sta. Wgn., W		1	---- ---	2483 232-3		
	Sta. Wgn., D	8	1	---- ---	---- ---	2526 690-1	
	Upper, except Sta. Wgn., C	8	1	---- ---	---- ---	2603 804-5	
	Lower, except Sta. Wgn., C	8	1	---- ---	---- ---	2483 278-9	
	PLATE, Reinforcement, except Sta. Wgn., W.		1	---- ---	2526 968-9		
	Upper, Reinforcement, except Sta. Wgn., C	8	2	---- ---	---- ---	2602 459	
	WASHER, Reinforcement Plate, except Sta. Wgn., W.		6	---- ---	6022 701		
8-55-40	BUSHING and SPRING, Socket, Sta. Wgn., L, P		2	2096 062	---- ---	2096 062	
	Except Sta. Wgn., C	8	4	---- ---	---- ---	*2096 062	
8-55-57	SOCKET, Tail, Stop and Turn Signal Lamp, except Sta. Wgn., V, W.		2	1841 893	1841 893		
	Sta. Wgn., V		2	1903 517			
	SOCKET PACKAGE, Tail, Stop and Turn Signal Lamp, except Sta. Wgn., V, R, P, D		2	2525 669	2525 669	2525 669	
	SOCKET and CABLE, Tail, Stop and Turn Signal Lamp, Sta. Wgn., L, C		2	2497 439	2580 155	2631 170	
	Except Sta. Wgn., L		2	2290 263			
	Tail Lamp, Sta. Wgn., L		2	2497 348			
	SOCKET, Tail Lamp, except Sta. Wgn., L		2	2096 648			
	Except Sta. Wgn., C	8	4	---- ---	---- ---	1841 893	
	Tail Lamp		2	---- ---	---- ---	---- ---	2096 141
8-55-63	SPRING, INSULATOR and CONTACT PACKAGE, Socket		★	2584 972	2584 972	2584 972	2584 972
8-55-136	HOUSING PACKAGE, w/Back-Up Lamp, Sta. Wgn., V.		1	2525 600-1			
	w/Back-Up Lamp, except Sta. Wgn., V		1	2525 643-4			
	w/o Back-Up Lamp, Sta. Wgn., R-L		2	---- ---	2525 683		
	w/o Back-Up Lamp, Sta. Wgn., R-H		2	---- ---	2525 682		
	EXTENSION, Tail, Stop, Turn Signal and Back-Up Lamp Housing, W-P	8	1	---- ---	2524 156-7		
	HOUSING, Tail Lamp, Sta. Wgn., D	8	2	---- ---	---- ---	2483 396	
	HOUSING, Tail, Stop and Turn Signal Lamp, Sta. Wgn., D.	8	2	---- ---	---- ---	2483 390	
	HOUSING, w/STUDS, w/Back-Up Lamp		1	---- ---	---- ---	---- ---	2480 844-5
8-55-140	WELT, Tail, Stop, Turn Signal and Back-Up Lamp, except Sta. Wgn., V		1	⊟2575 836-7			
	w/o Back-Up Lamp, Housing, Sta. Wgn., L		1	⊟2524 408-9			
	w/o Back-Up Lamp, except Sta. Wgn., R		2	---- ---	⊟2445 983		
	w/o Back-Up Lamp, Housing, L except Sta. Wgn., P		1	⊟2524 368-9	---- ---	⊟2449 902-3	
	w/o Back-Up Lamp, Housing, Sta. Wgn., D		2	---- ---	---- ---	⊟2449 641	
	Tailgate Tail Lamp, Sta. Wgn., L		1	⊟2524 326-7			
8-55-157	GASKET, Tail Lamp Housing, Sta. Wgn., C	8	2	---- ---	---- ---	2449 838	
	Tail, Stop and Turn Signal Lamp Housing, D-P	8	2	---- ---	---- ---	2524 122	
8-55-158	BEZEL, Tail, Stop and Turn Signal Lamp, Outer, except Sta. Wgn., L		1	2524 354-5			
	BEZEL, Tail, Stop and Turn Signal Lamp, Outer, Sta. Wgn., L		1	2524 426-7			
	BEZEL, Tail Lamp, Outer, Sta. Wgn., L		1	2524 334-5			
	BEZEL, Tail Lamp, Outer, except Sta. Wgn., L		1	2524 380-1			

TYPE LETTERS Indicate: V - Valiant, L - Dart, R - Belvedere, W - Coronet, P - Plymouth, D - Dodge, C - Chrysler, Y - Imperial

★Indicates use as required. Numerals in parentheses ( ) refer to notes. Printed in U.S.A.
⊟Indicates parts not listed in any previous parts book. Prices and specifications subject to change without notice.
March 1966 Supersedes May 1965. * Indicates change or addition.

MyMopar.com

8-55-0 TAIL, STOP AND TURN SIGNAL LAMP - Cont'd

CODE	PART NAME AND DESCRIPTION	CYL	PER CAR	VALIANT / DART	PLYMOUTH BELVEDERE / DODGE CORONET	PLYMOUTH FURY / DODGE POLARA / CHRYSLER	IMPERIAL
8-55-158	BEZEL and LENS, w/o Back-Up Lamp, except Sta. Wgn., R-H, R-P		2	---- ---	2524 097		
	BEZEL, LENS and GASKET PACKAGE, Deck Lid Tail, Stop and Turn Signal Lamp, except Sta. Wgn., P		1	---- ---	---- ---	2525 524-5	
	Quarter Panel Tail, Stop and Turn Signal Lamp except Sta. Wgn., P		1	---- ---	---- ---	2525 526-7	
	Tail Gate Tail, Stop and Turn Signal Lamp, Sta. Wgn., P-H	8	1	---- ---	---- ---	2525 541-2	
	Quarter Panel Tail, Stop and Turn Signal Lamp, Sta. Wgn., P		1	---- ---	---- ---	2525 545-6	
	BEZEL, Quarter Panel Tail, Stop and Turn Signal Lamp, except Sta. Wgn., D-L, D-H	8	1	---- ---	---- ---	2445 870-1	
	BEZEL, Quarter Panel Tail, Stop and Turn Signal Lamp, Sta. Wgn., D	8	2	---- ---	---- ---	2449 647	
	BEZEL, Tail, Stop and Turn Signal Lamp, Outer, D-P	8	1	---- ---	---- ---	*2524 396-7	
	Inner, D-P	8	1	---- ---	---- ---	2524 192-3	
	BEZEL, LENS and GASKET PACKAGE, Tail-gate Tail Lamp, Sta. Wgn., D	8	2	---- ---	---- ---	2584 887	
	BEZEL and GASKET PACKAGE, w/Back-Up Lamp, except Sta. Wgn., C	8	1	---- ---	---- ---	*2525 500-1	
	BEZEL, w/Back-Up Lamp		1	---- ---	---- ---	---- ---	2480 832-3
8-55-159	STUD, Tail, Stop and Turn Signal Lamp Housing, except Sta. Wgn., W-L, W-H		8	---- ---	6024 579		
	SCREW, Tail Lamp Bezel to Housing, Sta. Wgn., C	8	8	---- ---	---- ---	6024 892	
	STUD, Tail, Stop, Turn Signal and Back-Up Lamp Housing Drive		6	---- ---	---- ---	---- ---	6024 084
	SCREW, Tail, Stop, Turn Signal and Back-Up Lamp Lens Bezel, Inboard		4	---- ---	---- ---	---- ---	6024 499
	Outboard		2	---- ---	---- ---	---- ---	6024 497
8-55-161	J-NUT, Tail, Stop and Turn Signal Lamp Housing, Sta. Wgn., W		8	---- ---	6023 111		
	J-NUT, Tailgate Tail Lamp Housing to Tailgate Quarter Panel, Sta. Wgn., D	8	4	---- ---	---- ---	6023 111	
	J-NUT, Tail Lamp Housing, Sta. Wgn., C-L, C-H	8	8	---- ---	---- ---	6023 111	
	J-NUT, Tail, Stop and Turn Signal Lamp Housing Attaching, Sta. Wgn., C-L, C-H	8	10	---- ---	---- ---	6023 111	
8-55-162	SEALING WASHER, Tail, Stop and Turn Signal Lamp Housing to Quarter Panel, Sta. Wgn., D	8	8	---- ---	---- ---	6022 007	
	SEALING WASHER, Tail, Stop and Turn Signal Lamp Housing, except Sta. Wgn., .75" O.D., C	8	4	---- ---	---- ---	2252 282	
	SEALING WASHER, Tail, Stop and Turn Signal Lamp Housing, except Sta. Wgn., 1" O.D., C	8	4	---- ---	---- ---	6026 010	
	WASHER, Quarter Panel Tail, Stop and Turn Signal Lamp Housing, except Sta. Wgn., C	8	8	---- ---	---- ---	617 115	
8-55-163	SEAL, Tail Lamp Perisphery Moulding, except Sta. Wgn., P		★	---- ---	---- ---	6024 702	

TYPE LETTERS Indicate: V - Valiant, L - Dart, R - Belvedere, W - Coronet, P - Plymouth, D - Dodge, C - Chrysler, Y - Imperial

★Indicates use as required. Numerals in parentheses ( ) refer to notes. Printed in U.S.A.

⊟Indicates parts not listed in any previous parts book. Prices and specifications subject to change without notice.

• Indicates change or addition. March 1966 Supersedes May 1965.

MyMopar.com

CODE	PART NAME AND DESCRIPTION	CYL	PER CAR	VALIANT / DART	PLYMOUTH BELVEDERE / DODGE CORONET	PLYMOUTH FURY / DODGE POLARA / CHRYSLER	IMPERIAL
8-55-0	**TAIL, STOP AND TURN SIGNAL LAMP - Cont'd**						
8-55-194	LENS and GASKET PACKAGE, w/o Back-Up Lamp, Sta. Wgn., V		1	2525 602-3			
	w/o Back-Up Lamp, except Sta. Wgn., V		1	2525 645-6			
	Tail Lamp, except Sta. Wgn., L		1	2525 686-7			
	Tail Lamp, Sta. Wgn., L		1	2525 694-5			
	w/Back-Up Lamp, Sta. Wgn., L		1	2525 696-7			
	w/Back-Up Lamp, except Sta. Wgn., L		1	2525 690-1			
	w/o Back-Up Lamp, Sta. Wgn., L		1	2525 698-9			
	w/o Back-Up Lamp, except Sta. Wgn., L		1	2525 688-9			
	w/o Back-Up Lamp, Sta. Wgn., R-L		2	---- ---	2525 681		
	w/o Back-Up Lamp, Sta. Wgn., R-H		2	---- ---	2525 680		
	w/o Back-Up Lamp, Sta. Wgn., W, D.		2	---- ---	2584 861	2584 885	
	Except Sta. Wgn., W-L, W-H, D-L, D-H		1	---- ---	2584 857-8	2525 263-4	
	W-P	8	1	---- ---	2584 864-5		
	w/o Back-Up Lamp, D-P.	8	1	---- ---	---- ---	2584 883-4	
	Red, except Sta. Wgn., C	8	1	---- ---	---- ---	*2525 502-3	
	Tail Lamp, Sta. Wgn., C-L, C-H	8	1	---- ---	---- ---	*2584 875-6	
	Right, Tail, Stop and Turn Signal Lamp, Sta. Wgn., C-L, C-H	8	1	---- ---	---- ---	*2584 869	
	Left, Tail, Stop and Turn Signal Lamp, Sta. Wgn., C-L, C-H	8	1	---- ---	---- ---	*2584 870	
	LENS, COLLINATOR and GASKET PACKAGE		1	---- ---	---- ---	---- ---	2448 842-3
8-55-195	LENS, Tail, Stop and Turn Signal Lamp, 2 D. and 4 D., R-L		2	---- ---	2445 976		
8-55-198	FILTER PACKAGE, Tail, Stop and Turn Signal Lamp, C-H	8	2	---- ---	---- ---	⊟2586 757	
8-55-209	SCREW, Tail, Stop and Turn Signal Lamp Lens Attaching, Upper, Sta. Wgn., W		4	---- ---	6024 855		
	Lower, Sta. Wgn., W		4	---- ---	6024 495		
	Sta. Wgn., P		8	---- ---	---- ---	---- ---	⊟9419 347
8-55-214	GASKET, Tail, Stop and Turn Signal Lamp Lens, Sta. Wgn., V, P		2	2449 622	---- ---	2449 679	
	Tail Lamp Lens, Sta. Wgn., L, D		2	2524 328	---- ---	2449 653	
	Tail Lamp Lens, except Sta. Wgn., L		2	2524 367			
	Tail, Stop and Turn Signal Lamp Lens, Sta. Wgn., L, R, D		2	2524 410	2449 635	2449 643	
	Except Sta. Wgn., L, R, D-P		2	2524 367	2445 975	2524 123	
	Sta. Wgn., W, C-L, C-H		2	---- ---	2449 813	2449 821	
	Except Sta. Wgn., W-L, W-H		2	---- ---	2449 804		
	Outer, W-P	8	2	---- ---	2524 170		
	Tailgate Tail, Stop and Turn Signal Lamp Lens, Sta. Wgn., P-H.	8	2	---- ---	---- ---	2449 691	
	Tail Lamp Lens, Sta. Wgn., C	8	2	---- ---	---- ---	2449 839	
8-55-232	BASE, Tail Lamp, Sta. Wgn., L		1	2524 348-9			
	Tail, Stop and Turn Signal Lamp, Sta. Wgn., L		1	2524 522-3			
8-55-300	CONTACT, Socket		★	2256 966	2256 966	2256 966	2256 966

TYPE LETTERS Indicate: V - Valiant, L - Dart, R - Belvedere, W - Coronet, P - Plymouth, D - Dodge, C - Chrysler, Y - Imperial

★Indicates use as required. Numerals in parentheses ( ) refer to notes. Printed in U.S.A.

⊟Indicates parts not listed in any previous parts book. Prices and specifications subject to change without notice.

March 1966 Supersedes May 1965. * Indicates change or addition.

MyMopar.com

CODE	PART NAME AND DESCRIPTION	CYL	PER CAR	VALIANT / DART	PLYMOUTH BELVEDERE / DODGE CORONET	PLYMOUTH FURY / DODGE POLARA / CHRYSLER	IMPERIAL
8-56-0	**BACK-UP LAMP**						
8-56-1	LAMP, except Sta. Wgn., R, P		1	---- ---	2422 656-7	2483 364-5	
	w/License Lamp, Sta. Wgn.		1	---- ---	2422 728-9		
	Sta. Wgn.		2	---- ---	---- ---	2449 508	
	Except Sta. Wgn., D	8	1	---- ---	---- ---	2483 302-3	
8-56-2	SWITCH and CABLE, w/Manual Trans., P, D, C-L, C-M, C-P		1	2258 404	2258 404	2258 404	
	w/o Console, w/Auto. Trans.		1	*2661 167	*2661 167	*2661 167	*2661 167
	SWITCH and BRACKET, w/Console, w/Auto. Trans., V-P, L-P, R-P, W-P, P-P, D-L 2 D. H.T. and Cv.Cp., D-P, C-L and C-M 2 D. H.T., Cv.Cp. and 4 D. H.T., C-P, C-H 2 D. H.T. and 4 D. H.T.		1	2587 615	2587 615	2587 615	
8-56-4	NUT, Mounting, except Sta. Wgn., P, D		4	---- ---	---- ---	6023 204	
	NUT, Attaching, Sta. Wgn.		4	---- ---	---- ---	6023 201	
8-56-8	LENS and GASKET PACKAGE, except Sta. Wgn., V		2	2525 647			
	Sta. Wgn., V		2	2525 604	---- ---	2525 516	
	Except Sta. Wgn., R, D		1	---- ---	2421 802-3	2525 261-2	
	w/License Lamp, Sta. Wgn.		1	---- ---	2421 805-6		
	Except Sta. Wgn., W-L, W-H, P		1	---- ---	2584 855-6	2525 522-3	
	W-P	8	2	---- ---	2584 866		
	Clear, except Sta. Wgn., C	8	1	---- ---	---- ---	*2525 506-7	
	Red, except Sta. Wgn., C-L, C-M, C-P	8	1	---- ---	---- ---	2525 510-1	
			1	---- ---	---- ---	---- ---	2448 840-1
8-56-10	SCREW, Lens Attaching, except Sta. Wgn., R		4	---- ---	1961 965		
8-56-11	RETAINER, except Sta. Wgn., D	8	2	---- ---	---- ---	2483 310	
8-56-23	GASKET, Lens, except Sta. Wgn., W-L, W-H, D		2	---- ---	2449 805	2483 309	
	W-P	8	2	---- ---	2524 167		
	Outer, W-P	8	4	---- ---	2524 168		
8-56-25	WASHER, Back-Up Lamp, except Sta. Wgn., R		2	---- ---	6023 599		
	CUP WASHER, Mounting, except Sta. Wgn., P		2	---- ---	---- ---	6023 185	
8-56-27	SPRING, INSULATOR and CONTACT PACKAGE, Socket		★	2584 972	2584 972	2584 972	2584 972
8-56-34	SOCKET, except Sta. Wgn., V, P, C		2	*2497 433	---- ---	*2096 648	
	Sta. Wgn., V		2	2290 189			
	L		2	2497 433	2497 433	---- ---	2096 141
8-56-40	GASKET, Back-Up Lamp, Sta. Wgn.		2	---- ---	---- ---	2449 510	
8-56-41	SCREW, Back-Up Lamp, w/License Lamp, Sta. Wgn.		4	---- ---	6024 493		
8-56-46	GASKET, Switch, w/Manual Trans., P, D, C-L, C-M, C-P		1	1302 807	1302 807	1302 807	
	Switch Hole Plug, w/Manual Trans., P, D, C-L, C-M, C-P		1	1302 807	1302 807	1302 807	
8-56-53	SCREW, Back-Up Lamp Housing, except Sta. Wgn., R		4	---- ---	6023 414		

TYPE LETTERS Indicate: V - Valiant, L - Dart, R - Belvedere, W - Coronet, P - Plymouth, D - Dodge, C - Chrysler, Y - Imperial

★Indicates use as required. Numerals in parentheses ( ) refer to notes. Printed in U.S.A.

⊟Indicates parts not listed in any previous parts book. Prices and specifications subject to change without notice.

* Indicates change or addition. March 1966 Supersedes May 1965.

MyMopar.com

CODE	PART NAME AND DESCRIPTION	CYL	PER CAR	VALIANT / DART	PLYMOUTH BELVEDERE / DODGE CORONET	PLYMOUTH FURY / DODGE POLARA / CHRYSLER	IMPERIAL
8-56-0	**BACK-UP LAMP - Cont'd**						
8-56-61	COVER, Back-Up Lamp Socket, except Sta. Wgn., R		2	---- ---	2480 145		
8-57-0	**LICENSE LAMP**						
8-57-10	LAMP		1	2575 038			
	Except Sta. Wgn., R		2	---- ---	2422 664		
	Except Sta. Wgn., W, P, D		1	---- ---	2483 735	2483 296	
	Sta. Wgn.		1	---- ---	---- ---	2483 812	
	Except Sta. Wgn., C	8	1	---- ---	---- ---	2524 524	
			1	---- ---	---- ---	---- ---	2423 317
8-57-11	SCREW, License Lamp Mounting		2	*6024 317			
	SCREW, Attaching, Sta. Wgn.		2	---- ---	6025 081		
	SCREW, Attaching except Sta. Wgn., R		4	---- ---	1878 893		
	SCREW, Attaching, except Sta. Wgn., W		2	---- ---	1878 893		
8-57-13	U-NUT, License Lamp Attaching		2	---- ---	---- ---	---- ---	6024 153
8-57-54	LENS and GASKET PACKAGE, C		1	2525 674	---- ---	2525 517	
	Sta. Wgn., P, D.		1	---- ---	---- ---	2525 517	
8-57-56	GASKET, Lens, C		1	2575 042	---- ---	2449 518	
	Sta. Wgn., P, D	8	1	---- ---	---- ---	2449 518	
8-57-79	SOCKET, Sta. Wgn.		2	---- ---	2290 933		
	Except Sta. Wgn., R		2	---- ---	2096 141		
	Except Sta. Wgn., W		1	---- ---	2580 374	---- ---	2580 374
8-57-89	SPRING, INSULATOR and CONTACT PACKAGE, Socket		1	2584 972	2584 972	2584 972	2584 972
8-58-0	**STOP LAMP**						
8-58-60	SWITCH		1	2631 046	2580 998	---- ---	2580 998
	w/o Power Brakes, except D-L		1	---- ---	---- ---	*2631 047	
	w/o Power Brakes, D-L	8	1	---- ---	---- ---	*2496 160	
	w/Power Brakes		1	---- ---	---- ---	2631 048	
	SCREW and WASHER, Mounting		1	6023 541	6023 541	6023 541	6023 541
	NUT and WASHER, Mounting, w/Power Brakes		1	---- ---	---- ---	6023 204	
8-58-79	BRACKET, Mounting, w/Power Brakes		1	---- ---	---- ---	2580 620	
	w/o Power Brakes		1	---- ---	---- ---	2580 619	

NOTES

TYPE LETTERS Indicate: V - Valiant, L - Dart, R - Belvedere, W - Coronet, P - Plymouth, D - Dodge, C - Chrysler, Y - Imperial

★Indicates use as required. Numerals in parentheses ( ) refer to notes. Printed in U.S.A.

⊟Indicates parts not listed in any previous parts book. Prices and specifications subject to change without notice.

March 1966 Supersedes May 1965. * Indicates change or addition.

MyMopar.com

GROUP 9 - ENGINE

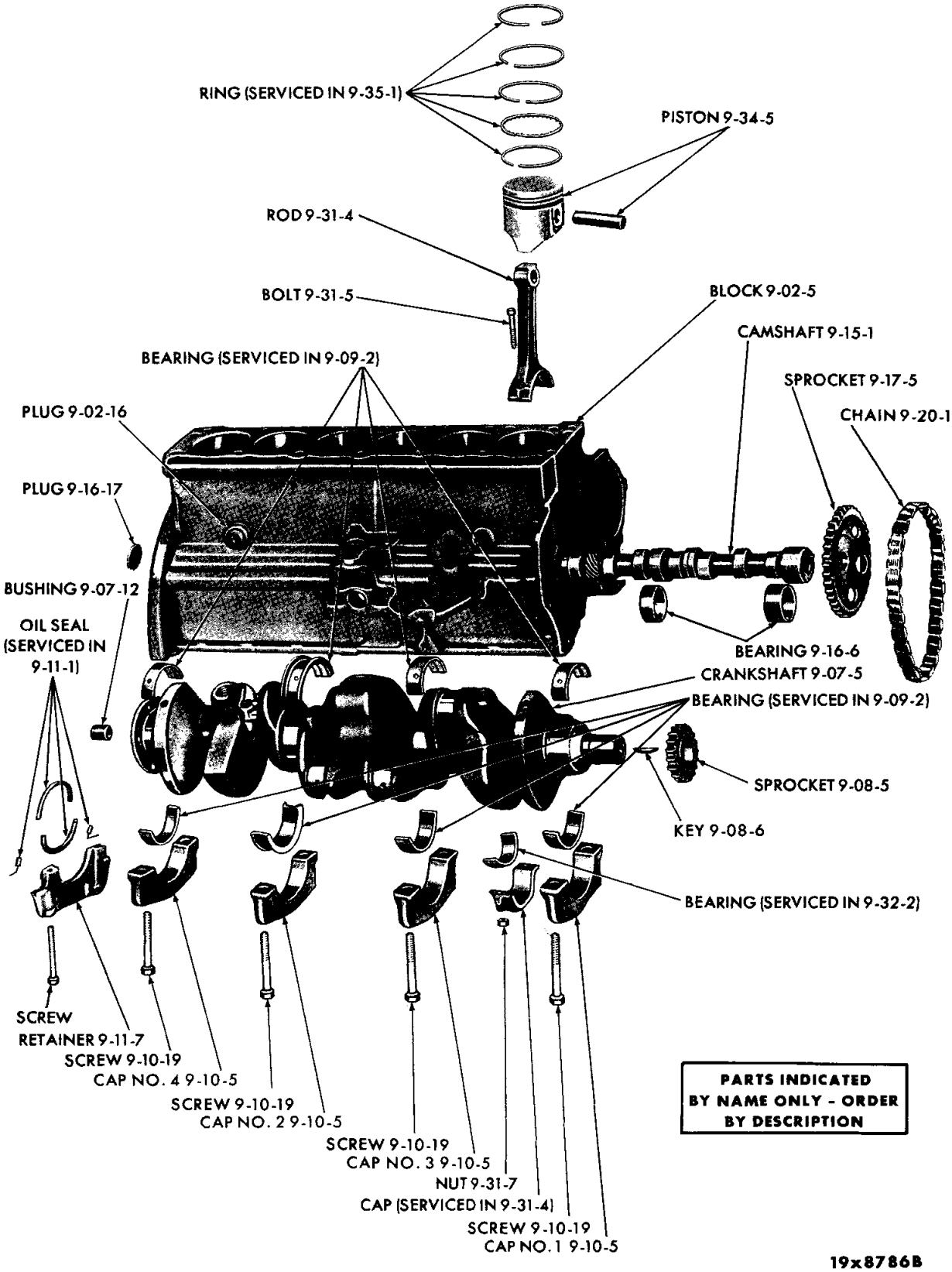

SHORT ENGINE (6 CYLINDER) - 170 AND 225 CU. IN. DISPLACEMENT

MyMopar.com

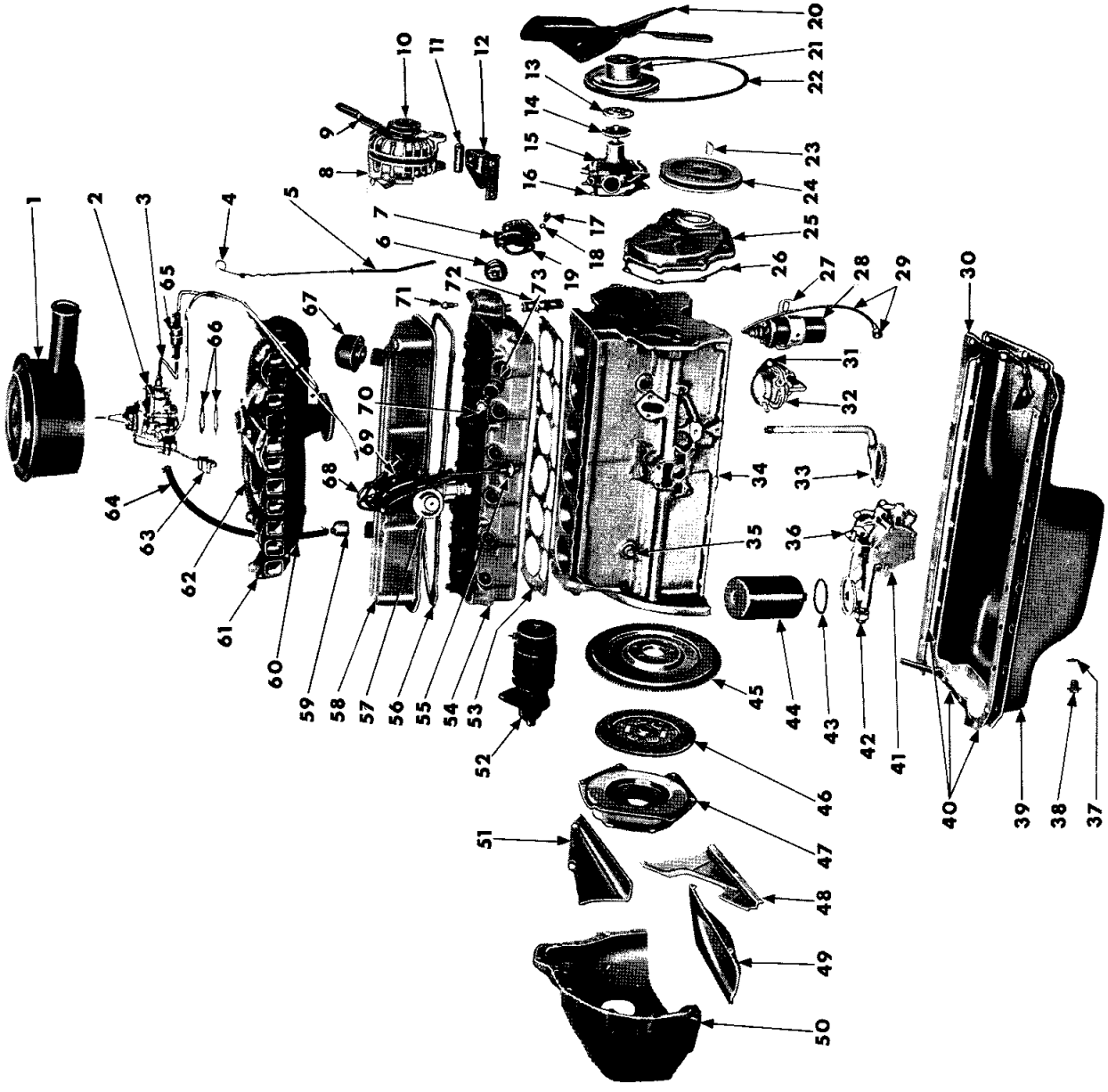

ENGINE EXTERNAL PARTS (6 CYLINDER) - 170 AND 225 CU. IN. DISPLACEMENT

MyMopar.com

ENGINE EXTERNAL PARTS (6 CYLINDER) - 170 AND 225 CU. IN. DISPLACEMENT

Ref. No.	Name	Part Type Code
1	Air Cleaner	14-29-2
2	Carburetor	14-30-1
3	Tube	14-89-2
4	Indicator	10-03-4
5	Tube	10-03-7
6	Thermostat	7-41-4
7	Elbow	9-05-5
8	Alternator	8-28-3
9	Strap	8-28-15
10	Pulley	8-28-297
11	Spacer	Not Serviced
12	Bracket	8-28-36
13	Spacer	7-02-16
14	Hub	7-05-1
15	Pump Package	7-42-1
16	Gasket	7-44-4
17	Screw	
18	Washer	
19	Gasket	9-05-6
20	Fan	7-02-1
21	Pulley	7-06-14
22	Belt	7-03-1
23	Key	9-08-5
24	Damper	9-13-5
25	Cover	9-23-5
26	Gasket	9-23-17
27	Bracket	8-35-41
28	Coil	8-35-4
29	Cable	8-36-49
30	Gasket	10-24-1
31	Gasket	14-74-1
32	Pump Package	14-73-1
33	Strainer, w/Pipe	10-23-7
34	Block	9-02-5
35	Plug	
36	Gasket	10-07-11
37	Gasket	10-24-38
38	Plug	10-24-37
39	Pan	10-24-4
40	Gasket (Serviced in 10-24-1)	
41	Pump	10-07-6
42	Cap	10-22-40
43	Gasket (Serviced in 10-26-6)	
44	Filter	10-26-6
45	Flywheel	9-45-1
46	Disc	6-13-1
47	Cover, w/Plate	6-14-1
48	Seal	6-10-10
49	Pan	6-10-2
50	Housing	6-09-1
51	Strut	6-09-11
52	Starter	8-52-4
53	Gasket	9-03-5
54	Head	9-03-4
55	Cover	8-36-117
56	Gasket	9-03-29
57	Distributor	8-27-1
58	Cover	9-03-28
59	Cap	10-02-66
60	Manifold	9-48-6
61	Gasket (Serviced in 9-50-1)	
62	Manifold	9-48-7
63	Choke	14-39-45
64	Hose	10-02-53
65	Fuel Filter	14-67-1
66	Gasket	14-30-2
67	Air Cleaner	10-01-21
68	Cable Set	8-36-1
69	Cap	8-27-71
70	Spark Plug	8-36-114
71	Sending Unit	8-37-155
72	Hose, Water Pump By-Pass	7-14-9
73	Tube	8-36-136

PARTS INDICATED BY NAME ONLY - ORDER BY DESCRIPTION

MyMopar.com

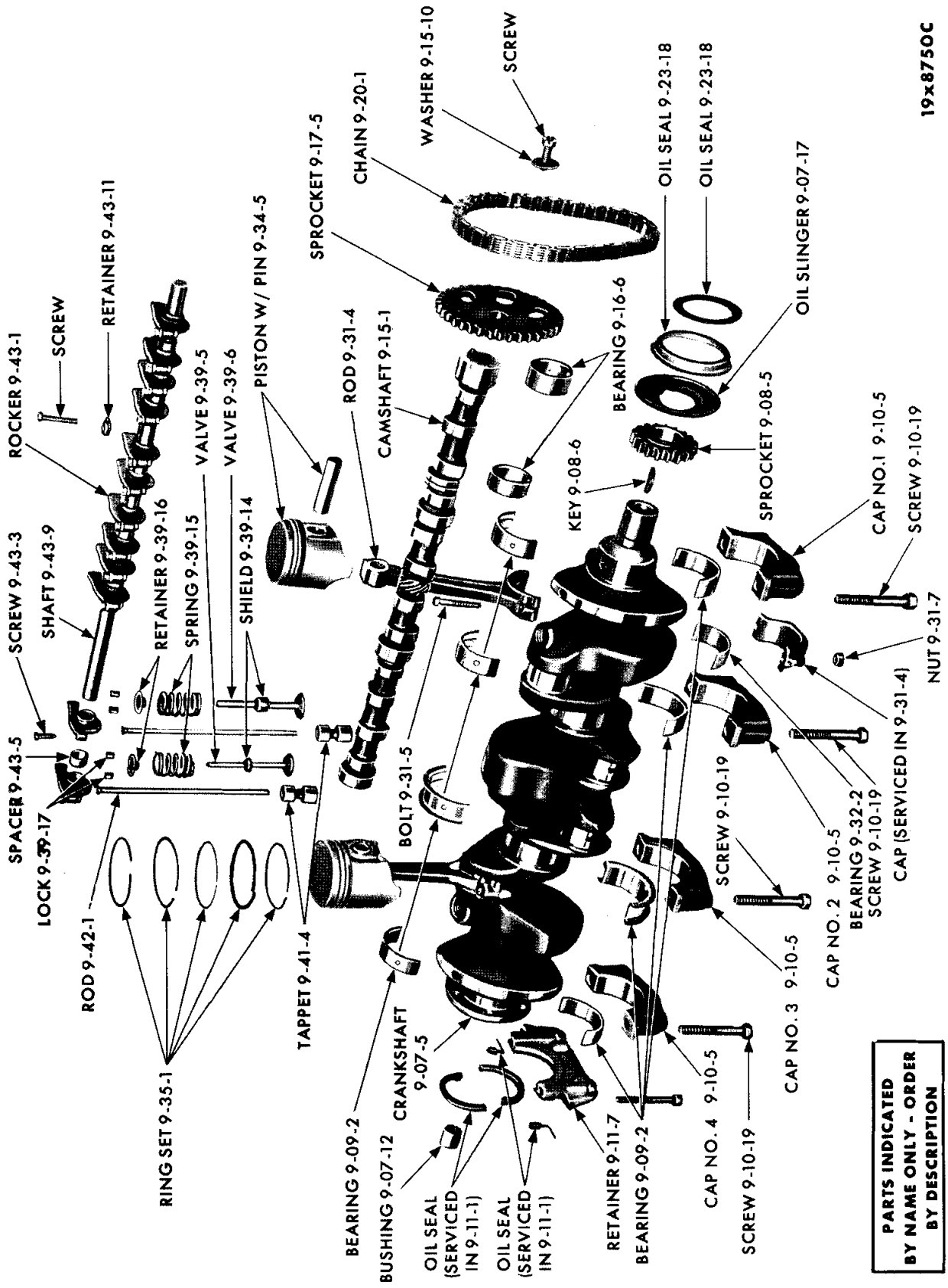

ENGINE INTERNAL PARTS (6 CYLINDER) - 170 AND 225 CU. IN. DISPLACEMENT

MyMopar.com

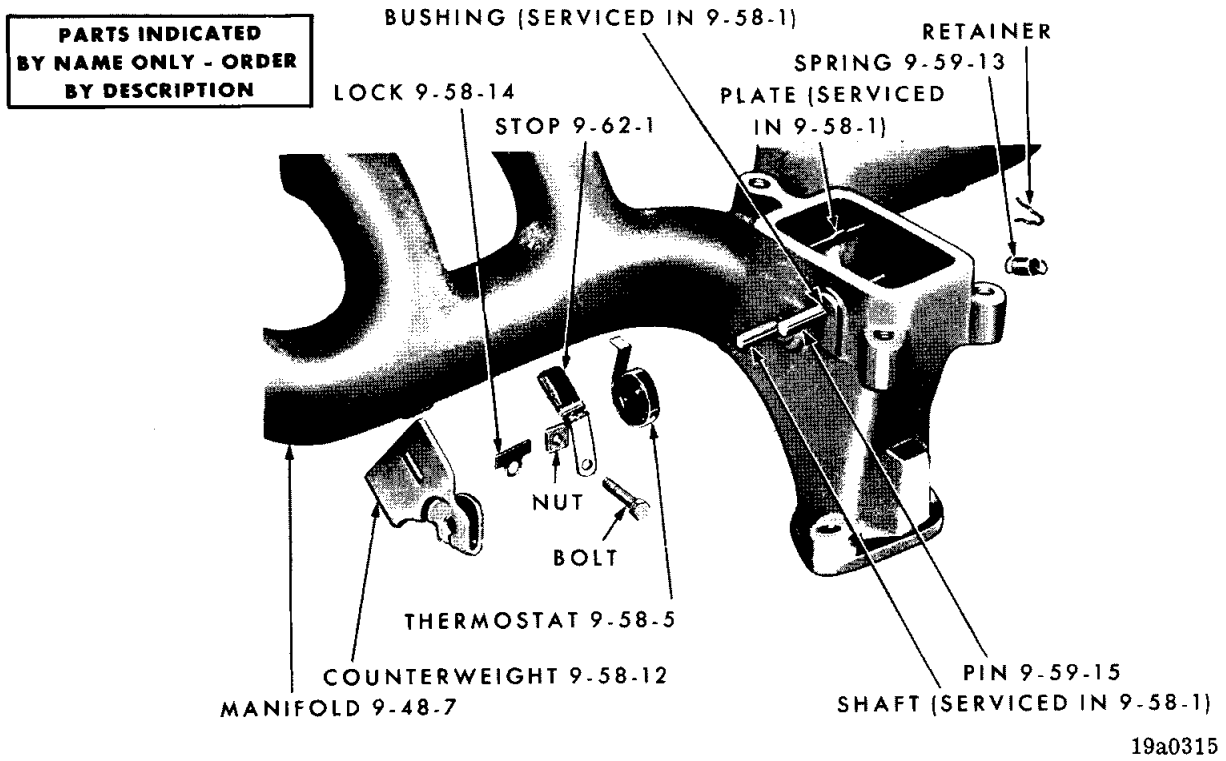

ENGINE MANIFOLD HEAT CONTROLS - 6 CYLINDER

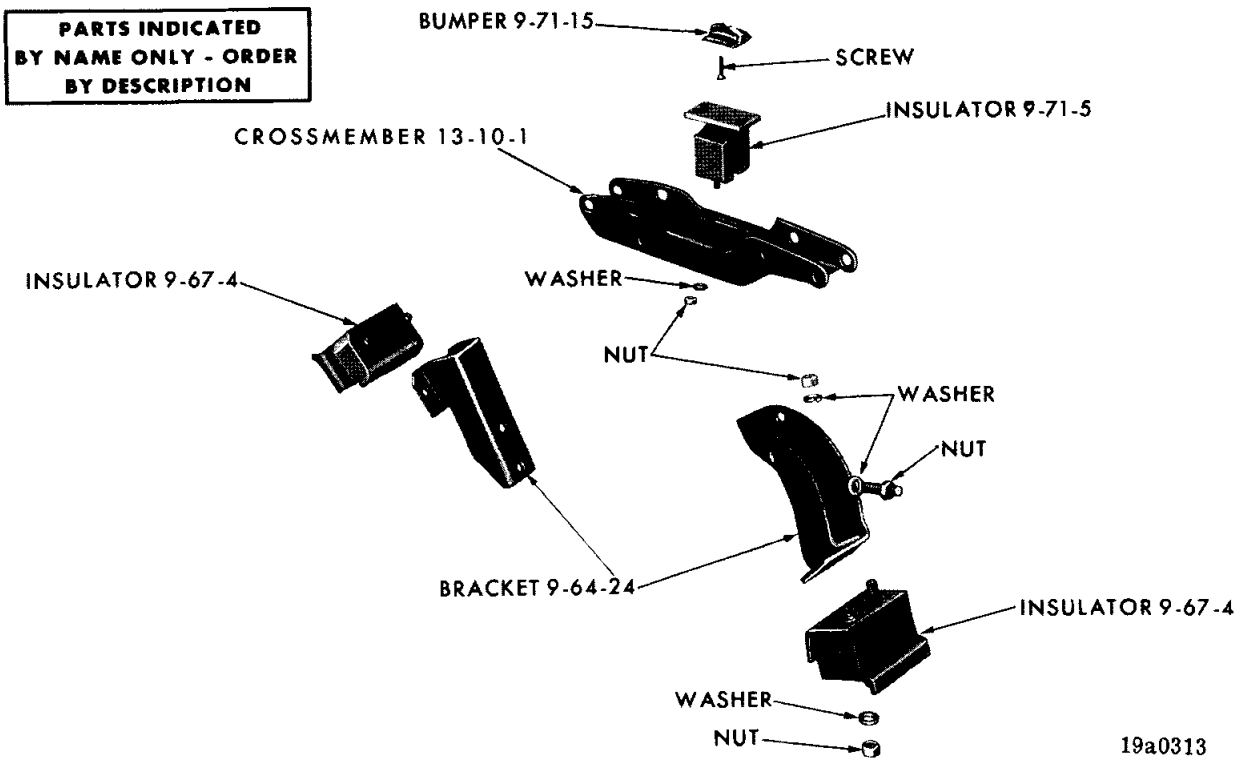

ENGINE MOUNTINGS (6 CYLINDER) - VALIANT AND DART

MyMopar.com

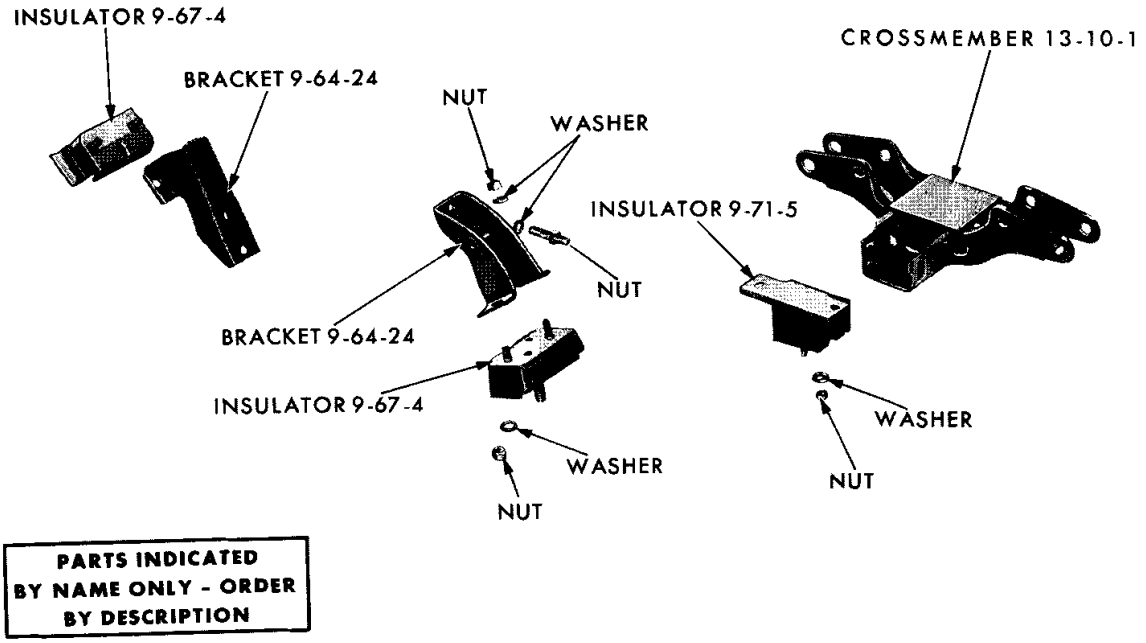

19x9336B

ENGINE MOUNTINGS (6 CYLINDER) - BELVEDERE AND CORONET

NOTES

MyMopar.com

IMPORTANT

ENGINE PARTS IN GROUP 9 ARE NOW LISTED UNDER THE CUBIC INCH DISPLACEMENT ENGINE TO WHICH THEY APPLY RATHER THAN BY CAR LINE AS IN EARLIER CATALOGS, AND OTHER GROUPS OF THIS CATALOG. COLUMN HEADINGS INDICATING "CUBIC INCH DISPLACEMENT" HAVE REPLACED THE USUAL "VALIANT-DART" "PLYMOUTH-DODGE", ETC., HEADINGS.

TO IDENTIFY ENGINES, SEE "ENGINE IDENTIFICATION NUMBERS" IN THE GENERAL INFORMATION SECTION.

IN ADDITION, 6 AND 8 CYLINDER ENGINES ARE LISTED IN SEPARATE SECTIONS OF THIS CATALOG.

SIX CYLINDER ENGINES

NOTE: The following symbols are used in connection with engine numbers.
Engine numbers without symbols indicate "Standard Cylinders and Crankshaft Bearings".

The Letter "A" immediately following the engine identification number indicates Bore .020" (.508 MM) Larger than Standard.
The Letter "B" immediately following the engine identification number indicates Main and Connecting Rod Bearings .010" (.245 MM) Smaller than Standard.
The Letters "AB" immediately following the engine identification number indicates cylinder Bore .020" (.508 MM) Larger than Standard and the Main and Connecting Rod Bearings .010" (.254 MM) Smaller than Standard.

The Letters in the circular pads at either end of the engine number are for the use of factory inspectors only and should not be connected with the engine number.
Always mention Serial Numbers when ordering major assemblies.

CODE	PART NAME AND DESCRIPTION	PER CAR	CUBIC INCH DISPLACEMENT 170	225
9-01-0	**ENGINE ASSEMBLY**			
9-01-5	GASKET SET, Engine	1	2585 200	2585 200
	NOTE: Short Engine Assemblies Consist of: The Cylinder Block with Pistons and Rings, Crankshaft and Bearings, Connecting Rods and Bearings, Camshaft and Bearings, Camshaft Thrust Plate, Camshaft and Crankshaft Sprockets and Timing Chain.			
9-01-24	SHORT ENGINE, V1, L1	1	2463 675	---- ---
	w/Low Compression, Export, V1, L1	1	2463 677	---- ---
		1	---- ---	2463 683
	w/Low Compression, Export	1	---- ---	2463 685
9-02-0	**CYLINDER BLOCK**			
9-02-5	BLOCK, w/PISTON and RINGS	1	*2463 395	
	w/Low Compression, Export	1	*2463 396	
		1		*2463 399
	w/Low Compression, Export	1		*2463 400
9-02-7	DOWEL, Cylinder Block to Clutch Housing or Torque Converter Housing	2	1122 532	1122 532
9-02-16	PLUG, Water Hole	3	2406 356	2406 356
9-02-37	COVER, Cylinder Block Starter Opening, w/Manual Trans. and 11" Clutch R1, W1, Taxi, P1	1		2536 649
9-03-0	**CYLINDER HEAD**			
9-03-4	HEAD	1	2463 476	2463 476
9-03-5	GASKET	1	1947 578	1947 578
9-03-10	SCREW	14	1947 687	1947 687
9-03-28	COVER, Cylinder Head	1	2465 889	2465 889
9-03-29	GASKET, Cylinder Head Cover	1	2406 625	2406 625

TYPE LETTERS Indicate: V - Valiant, L - Dart, R - Belvedere, W - Coronet, P - Plymouth, D - Dodge, C - Chrysler, Y - Imperial

★Indicates use as required. Numerals in parentheses ( ) refer to notes. Printed in U.S.A.
⊟Indicates parts not listed in any previous parts book. Prices and specifications subject to change without notice.
• Indicates change or addition. March 1966 Supersedes May 1965.

MyMopar.com

CODE	PART NAME AND DESCRIPTION	PER CAR	CUBIC INCH DISPLACEMENT 170	225
	SIX CYLINDER ENGINES			
9-05-0	**CYLINDER HEAD WATER OUTLET ELBOW**			
9-05-5	ELBOW	1	2121 524	2121 524
	WASHER, Elbow Screw	2	6022 190	6022 190
9-05-6	GASKET, Elbow	1	1947 671	1947 671
9-07-0	**CRANKSHAFT**			
9-07-5	CRANKSHAFT	1	2268 619	2268 442
9-07-12	BUSHING, Crankshaft Transmission Drive Pinion	1	53 298	53 298
9-07-17	OIL SLINGER	1	1618 686	1618 686
9-08-0	**CRANKSHAFT SPROCKET**			
9-08-5	SPROCKET	1	2128 912	2128 912
	KEY	1	152 191	152 191
9-09-0	**CRANKSHAFT BEARING PACKAGE**			

NOTE: When .001 thicker wall crankshaft main bearings are used for engines in production a Maltese Cross is stamped on the model pad of the cylinder block.

NOTE: Crankshaft Bearing Packages consist of one upper and one lower Bearing.

9-09-2	BEARING PACKAGE, No. 1 Std.	1	2240 368	2240 368
	Nos. 2 and 4 Std.	2	2240 376	2240 376
	No. 3 Std.	1	2240 372	2240 372
	No. 1 .001 U/S	1	2240 369	2240 369
	Nos. 2 and 4 .001 U/S	2	2240 377	2240 377
	No. 3 .001 U/S	1	2240 373	2240 373
	No. 1 .002 U/S	1	2240 370	2240 370
	Nos. 2 and 4 .002 U/S	2	2240 378	2240 378
	No. 3 .002 U/S	1	2240 374	2240 374
	No. 1 .003 U/S	1	2275 381	2275 381
	Nos. 2 and 4 .003 U/S	2	2275 383	2275 383
	No. 3 .003 U/S	1	2275 385	2275 385
	No. 1 .010 U/S	1	2240 371	2240 371
	Nos. 2 and 4 .010 U/S	2	2240 379	2240 379
	No. 3 .010 U/S	1	2240 375	2240 375
	No. 1 .012 U/S	1	2275 382	2275 382
	Nos. 2 and 4 .012 U/S	2	2275 384	2275 384
	No. 3 .012 U/S	1	2275 386	2275 386
9-10-0	**CRANKSHAFT BEARING CAP**			
9-10-5	CAP, Nos. 1 and 2	2	2084 403	2084 403
	No. 3	1	2084 405	2084 405
	No. 4	1	2084 404	2084 404
9-10-19	SCREW, Crankshaft Bearing Cap	8	1618 695	1618 695
9-11-0	**CRANKSHAFT REAR BEARING OIL SEAL**			
9-11-1	OIL SEAL PACKAGE	1	2084 411	2084 411
9-11-7	RETAINER	1	1947 557	1947 557
	SCREW	2	⊟9418 004	⊟9418 004

TYPE LETTERS Indicate: V - Valiant, L - Dart, R - Belvedere, W - Coronet, P - Plymouth, D - Dodge, C - Chrysler, Y - Imperial

★Indicates use as required. Numerals in parentheses ( ) refer to notes. Printed in U.S.A.

⊟Indicates parts not listed in any previous parts book. Prices and specifications subject to change without notice.

March 1966 Supersedes May 1965. • Indicates change or addition

MyMopar.com

SIX CYLINDER ENGINES

CODE	PART NAME AND DESCRIPTION	PER CAR	CUBIC INCH DISPLACEMENT 170	225
9-13-0	**CRANKSHAFT VIBRATION DAMPER**			
9-13-5	DAMPER	1	2269 076	2269 076
9-15-0	**CAMSHAFT**			
9-15-1	CAMSHAFT	1	2264 105	
		1	---- ---	2465 852
9-16-0	**CAMSHAFT BEARING**			
9-16-6	BEARING, No. 1	1	2121 725	2121 725
	No. 2	1	1821 772	1821 772
	No. 3	1	2121 726	2121 726
	No. 4	1	2121 727	2121 727
	No. 1 .010 O/S	1	2205 510	2205 510
	No. 2 .010 O/S	1	2205 512	2205 512
	No. 3 .010 O/S	1	2205 514	2205 514
	No. 4 .010 O/S	1	2205 516	2205 516
9-16-17	PLUG, Camshaft Rear Bearing	1	2402 905	2402 905
9-17-0	**CAMSHAFT SPROCKET**			
9-17-5	SPROCKET	1	1947 560	*1947 560
	WASHER	1	6023 053	6023 053
9-20-0	**TIMING CHAIN**			
9-20-1	CHAIN	1	2202 499	2202 499
9-23-0	**CHAIN CASE COVER**			
9-23-5	COVER	1	2203 106	2203 106
9-23-10	SCREW, w/WASHER	6	180 077	180 077
		1	6024 246	6024 246
9-23-17	GASKET, Cover	1	1947 554	1947 554
9-23-18	OIL SEAL	1	1947 581	1947 581
9-23-40	INDICATOR, Timing	1	2269 078	2269 078

9-31-0 CONNECTING ROD

NOTE: Connecting Rod includes Bearing Cap, Bolt, Nut, Lockwasher and Bushing but does not include Bearing.

9-31-4	ROD	6	1947 165	---- ---
		6	---- ---	2406 657
9-31-5	BOLT, Bearing Cap	12	1944 865	1944 865
9-31-7	NUT, Bearing Cap Bolt	16	1737 695	1737 695

TYPE LETTERS Indicate: V - Valiant, L - Dart, R - Belvedere, W - Coronet, P - Plymouth, D - Dodge, C - Chrysler, Y - Imperial

★Indicates use as required. Numerals in parentheses ( ) refer to notes. Printed in U.S.A.
⊟Indicates parts not listed in any previous parts book. Prices and specifications subject to change without notice.
• Indicates change or addition. May 1965, Supersedes Sept. 4, 1964.

MyMopar.com

SIX CYLINDER ENGINES

9-32-0 CONNECTING ROD BEARING PACKAGES

NOTE: When .001 thicker wall connecting rod bearings are used for engines in production a Maltese Cross is stamped on the model pad of the cylinder block.

NOTE: Connecting Rod Bearing Packages consist of one upper and one lower Bearing.

CODE	PART NAME AND DESCRIPTION	PER CAR	CUBIC INCH DISPLACEMENT 170	CUBIC INCH DISPLACEMENT 225
9-32-2	BEARING PACKAGE, Std.	6	2421 356	2421 356
	.001 U/S	6	2084 381	2084 381
	.002 U/S	6	2084 382	2084 382
	.003 U/S	6	2275 411	2275 411
	.010 U/S	6	2421 360	2421 360
	.012 U/S	6	2275 412	2275 412

9-34-0 PISTON, W/PIN

NOTE: The following Pistons include Pin and Retaining Rings.

9-34-5	PISTON, Std. 3.40" Bore	6	2084 384	2084 384
	.005 O/S From 3.40" Bore	6	2084 385	2084 385
	.020 O/S From 3.40" Bore	6	2084 386	2084 386
	.040 O/S From .340" Bore	6	2084 387	2084 387
	Std. 3.40" Bore Low Comp. Export	6	2084 388	2084 388
	.005 O/S From 3.40 Bore Low Comp. Export	6	2084 389	2084 389
	.20 O/S From 3.40" Bore Low Comp. Export	6	2084 390	2084 390

9-35-0 PISTON RING SETS

9-35-1	SET, Piston Ring, Std. to .009 O/S From 3.40" Bore	1	2448 735	2448 735
	.020 to .029 O/S From 3.40" Bore	1	2275 440	2275 440
	.040 to .049 O/S From 3.40" Bore	1	2275 441	2275 441

9-39-0 VALVE

9-39-1	GASKET PACKAGE, Valve Grinding	1	2585 201	2585 201
9-39-5	VALVE, Intake, Std.	6	1947 623	1947 623
	.005 O/S	6	2121 578	2121 578
	.015 O/S.	6	2121 579	2121 579
	.030 O/S.	6	2121 580	2121 580
9-39-6	VALVE, Exhaust, Std.	6	1947 624	1947 624
	.005 O/S.	6	2121 581	2121 581
	.015 O/S.	6	2121 582	2121 582
	.030 O/S.	6	2121 583	2121 583
9-39-14	SHIELD, Intake Valve Stem Oil	6	2205 958	2205 958
	SHIELD, Exhaust Valve Stem Oil	6	2205 959	2205 959
9-39-15	SPRING	12	1739 534	1739 534
9-39-16	RETAINER, Spring	12	⊟2402 045	⊟2402 045
9-39-17	LOCK, Intake Valve Spring Retainer	12	381 875	381 875
	LOCK, Exhaust Valve Spring Retainer	12	1614 666	1614 666

9-41-0 VALVE TAPPET

9-41-4	TAPPET, Std.	12	2203 250	2203 250
	.001 O/S.	12	2203 252	2203 252
	.008 O/S.	12	2269 024	2269 024
	.030 O/S.	12	1739 359	1739 359

TYPE LETTERS Indicate: V - Valiant, L - Dart, R - Belvedere, W - Coronet, P - Plymouth, D - Dodge, C - Chrysler, Y - Imperial

★Indicates use as required. Numerals in parentheses ( ) refer to notes. Printed in U.S.A.

⊟Indicates parts not listed in any previous parts book. Prices and specifications subject to change without notice.

May 1965, Supersedes Sept. 4, 1964. • Indicates change or addition.

MyMopar.com

CODE	PART NAME AND DESCRIPTION	PER CAR	CUBIC INCH DISPLACEMENT 170	225
	SIX CYLINDER ENGINES			
9-42-0	**VALVE PUSH ROD**			
9-42-1	ROD	12	1947 704	
		12	---- ---	2120 514
9-43-0	**VALVE ROCKER**			
9-43-1	ROCKER	12	1947 594	1947 594
9-43-3	SCREW, Adjusting	12	1855 238	1855 238
9-43-5	SPACER	6	2120 694	2120 694
9-43-9	SHAFT	1	1947 614	1947 614
9-43-11	RETAINER, Shaft	6	*1947 616	*1947 616
	Shaft, Center	1	1947 617	1947 617
9-43-19	PLUG, Shaft	2	1324 268	1324 268
9-45-0	**FLYWHEEL**			
9-45-1	FLYWHEEL, w/Ring GEAR, except Taxi	1	2128 992	2128 992
	Taxi	1	---- ---	2463 843
9-45-2	GEAR, Flywheel Ring, except Taxi	1	2121 196	2121 196
	Taxi	1	---- ---	1673 646
	GEAR, Torque Converter Ring, except Police and Taxi	1	2121 196	2121 196
	Police and Taxi	1	---- ---	1941 648
9-46-0	**TORQUE CONVERTER**			
9-46-4	TORQUE CONVERTER, except Police and Taxi	1	2204 403	2204 403
	Police and Taxi	1	---- ---	2125 090
	BOLT, Torque Converter to Crankshaft, Police and Taxi	6	---- ---	*6022 148
9-46-8	PLATE, Torque Converter Drive, except Police and Taxi	1	1949 763	1949 763
	Police and Taxi	1	---- ---	2204 719
9-46-21	SCREW, Drive Plate to Torque Converter	4	1949 765	1949 765
	SCREW, Drive Plate to Crankshaft	6	1949 424	1949 424
9-46-27	TUBE, Transmission Oil Cooler Inlet and Outlet	★	1843 253	1843 253
9-46-33	BRACKET, Transmission Oil Cooler Tube	1	1949 176	1949 176
9-46-40	ELBOW, Transmission Oil Cooler Tube Inlet	1	2205 237	2205 237
9-46-43	NUT, Transmission Oil Cooler Tube Transmission End, Radiator End	★	1941 667	1941 667
9-46-50	SHIELD, Trans. Torque Converter R1, W1, P1 Police and Taxi	1	---- ---	2466 829
9-46-61	ADAPTER, Torque Converter Drive Plate, Police and Taxi	1	---- ---	2202 472
	SCREW, Cylinder Block to Adapter Plate	1	---- ---	⊟6024 864
	SCREW, w/WASHER, Adapter Plate to Cylinder Block	3	---- ---	*6023 187
9-46-94	DOWEL, Cylinder Block to Clutch Housing or Torque Converter Transmission Housing, Eccentric .007 Over Center	2	1736 347	1736 347
	Eccentric .014 Over Center	2	1736 348	1736 348
	Eccentric .021 Over Center	2	1736 353	1736 353

TYPE LETTERS Indicate: V - Valiant, L - Dart, R - Belvedere, W - Coronet, P - Plymouth, D - Dodge, C - Chrysler, Y - Imperial

★Indicates use as required. Numerals in parentheses ( ) refer to notes. Printed in U.S.A.
⊟Indicates parts not listed in any previous parts book. Prices and specifications subject to change without notice.
* Indicates change or addition.

MyMopar.com

SIX CYLINDER ENGINES

CODE	PART NAME AND DESCRIPTION	PER CAR	ENGINE CUBIC INCH DISPLACEMENT 170	225
9-46-0	**TORQUE CONVERTER - Cont'd**			
9-46-130	SEAL, Transmission Torque Converter Impeller Hub, except Police and Taxi	1	2124 705	2124 705
	Police and Taxi	1	---- ---	1942 020
9-46-228	ROLLER, Overrunning Clutch	8	670 776	670 776
9-46-229	SPRING, Overrunning Clutch Roller	8	1942 187	1942 187
9-48-0	**MANIFOLD**			
9-48-6	MANIFOLD, Exhaust	1	2298 917	2298 917
9-48-7	MANIFOLD, Intake	1	2205 902	2205 902
	SCREW, Intake to Exhaust Manifold	2	⊟6025 759	⊟6025 759
	WASHER, Intake to Exhaust Manifold Screw	1	6022 185	6022 185
9-48-8	CONNECTOR, Intake Manifold Vacuum Control	1	---- ---	1858 955
9-48-12	STUD, Intake and Exhaust Manifold	★	2121 585	2121 585
9-48-14	WASHER, Intake and Exhaust Manifold Stud	★	2121 223	2121 223
		★	2206 416	2206 416
9-48-44	NUT, Exhaust Manifold Stud Upper End	2	1947 753	1947 753
9-48-45	WASHER, Exhaust Manifold Stud Upper End	2	1947 752	1947 752
9-50-0	**MANIFOLD GASKETS**			
9-50-1	GASKET SET, Manifold	1	2084 416	2084 416
9-50-3	GASKET, Intake to Exhaust Manifold	1	2268 264	2268 264
9-58-0	**MANIFOLD HEAT CONTROL VALVE THERMOSTAT**			
9-58-1	HEAT CONTROL PACKAGE, Manifold	1	2525 442	2525 442
9-58-5	THERMOSTAT	1	2121 554	2121 554
9-58-12	COUNTERWEIGHT or SHIELD	1	2468 307	2468 307
9-58-13	BOLT, Shield	1	1736 012	1736 012
9-58-14	LOCK, Shield	1	1409 594	1409 594
9-59-0	**MANIFOLD HEAT CONTROL VALVE**			
9-59-13	SPRING, Valve	1	1558 897	1558 897
9-59-15	PIN, Valve	1	1639 597	1639 597
9-62-0	**MANIFOLD HEAT CONTROL VALVE STOP**			
9-62-1	STOP, Valve	1	2465 203	2465 203
9-64-0	**ENGINE FRONT SUPPORT**			
9-64-18	WASHER, Engine Front Support to Frame	★	2128 774	2128 774
9-64-24	BRACKET, Engine Front Support Insulator, Right, V1, L1	1	2264 668	2264 668
	Left, V1, L1	1	2265 023	2265 023

TYPE LETTERS Indicate: V - Valiant, L - Dart, R - Belvedere, W - Coronet, P - Plymouth, D - Dodge, C - Chrysler, Y - Imperial

★Indicates use as required. Numerals in parentheses ( ) refer to notes. Printed in U.S.A.

⊟Indicates parts not listed in any previous parts book. Prices and specifications subject to change without notice.

May 1965, Supersedes Sept. 4, 1964. * Indicates change or addition.

MyMopar.com

SIX CYLINDER ENGINES

9-64-0 ENGINE FRONT SUPPORT - Cont'd

CODE	PART NAME AND DESCRIPTION	PER CAR	CUBIC INCH DISPLACEMENT 170	CUBIC INCH DISPLACEMENT 225
9-64-24	BRACKET - Cont'd			
	Right, R1, W1, P1	1	---- ---	2264 678
	Left, R1, W1	1	---- ---	2264 679
	Left, P1 except Police and Taxi	1	---- ---	2463 944
	Left, P1 Police and Taxi	1	---- ---	2468 297

9-67-0 ENGINE FRONT SUPPORT INSULATOR

CODE	PART NAME AND DESCRIPTION	PER CAR	170	225
9-67-4	INSULATOR, Engine Front Support, Right, except Cv.Cp., V1, L1	1	2264 140	2264 140
	Left, except Cv.Cp., V1, L1	1	2265 018	2265 018
	Right, Cv.Cp., V1, L1	1	2406 708	2406 708
	Left, Cv.Cp., V1, L1	1	2406 705	2406 705
	Right, w/Four Speed Manual Trans., V1, L1	1	---- ---	2406 708
	Left, w/Four Speed Manual Trans., V1, L1	1	---- ---	2406 705
	Right, except Police and Taxi,w/Auto. Trans., R1, W1	1	---- ---	2264 674
	Left, except Police and Taxi, w/Auto. Trans., R1, W1	1	---- ---	2264 675
	Right, Police and Taxi, w/Auto. Trans., R1, W1	1	---- ---	2406 672
	Left, Police and Taxi, w/Auto. Trans., R1, W1	1	---- ---	2406 674
	Right, except Police and Taxi, w/Auto. Trans., P1	1	---- ---	2463 939
	Right, Police and Taxi, w/Auto. Trans., P1	1	---- ---	2468 341
	Left, P1	1	---- ---	2463 943
	SCREW, w/WASHER, Engine Front Support Insulator to Frame, Right,P2	2	---- ---	*6024 023
	WASHER, Insulator to Bracket Bolt, Right, P1	2	---- ---	*6022 190

9-71-0 ENGINE REAR SUPPORT INSULATOR

CODE	PART NAME AND DESCRIPTION	PER CAR	170	225
9-71-5	INSULATOR, Engine Rear Support, V1, L1	1	2265 836	2265 836
	R1, W1	1	---- ---	2265 826
	P1	1	---- ---	2460 886
9-71-8	NUT, Engine Rear Support Insulator Stud	2	*2129 684	*2129 684
9-71-15	BUMPER, Engine Rear Support Insulator, V1, L1	1	2206 965	2206 965

NOTES

TYPE LETTERS Indicate: V - Valiant, L - Dart, R - Belvedere, W - Coronet, P - Plymouth, D - Dodge, C - Chrysler, Y - Imperial

★Indicates use as required. Numerals in parentheses ( ) refer to notes. Printed in U.S.A.

⊟Indicates parts not listed in any previous parts book. Prices and specifications subject to change without notice.

• Indicates change or addition. May 1965, Supersedes Sept. 4, 1964.

MyMopar.com

CODE	PART NAME AND DESCRIPTION	CYL	PER CAR	VALIANT / DART	PLYMOUTH BELVEDERE / DODGE CORONET	PLYMOUTH FURY / DODGE POLARA / CHRYSLER	IMPERIAL

NOTES

TYPE LETTERS Indicate: V - Valiant, L - Dart, R - Belvedere, W - Coronet, P - Plymouth, D - Dodge, C - Chrysler, Y - Imperial

★Indicates use as required. Numerals in parentheses ( ) refer to notes. Printed in U.S.A.

⊟Indicates parts not listed in any previous parts book. Prices and specifications subject to change without notice.

MyMopar.com

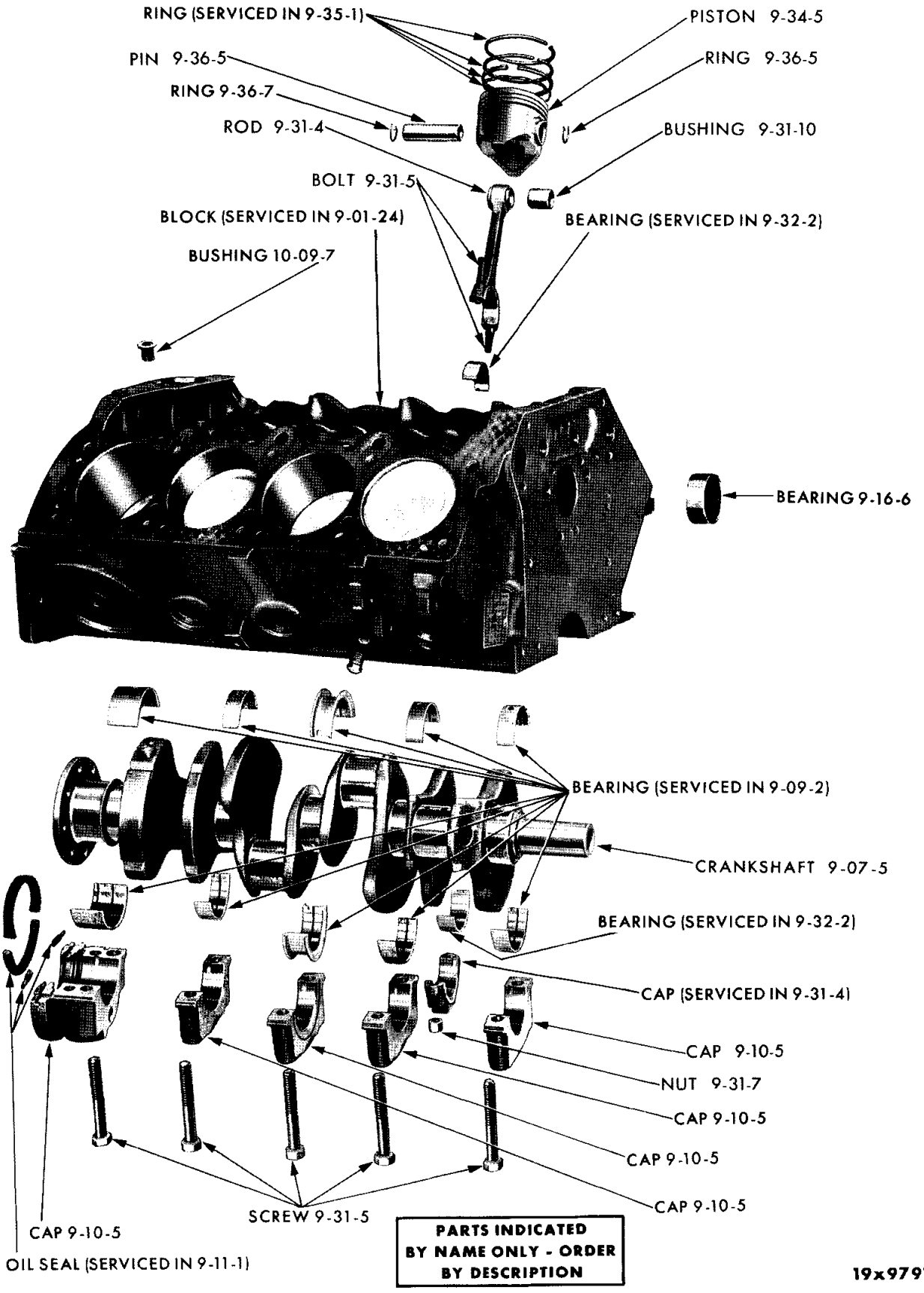

SHORT ENGINE - V8 CYLINDER

MyMopar.com

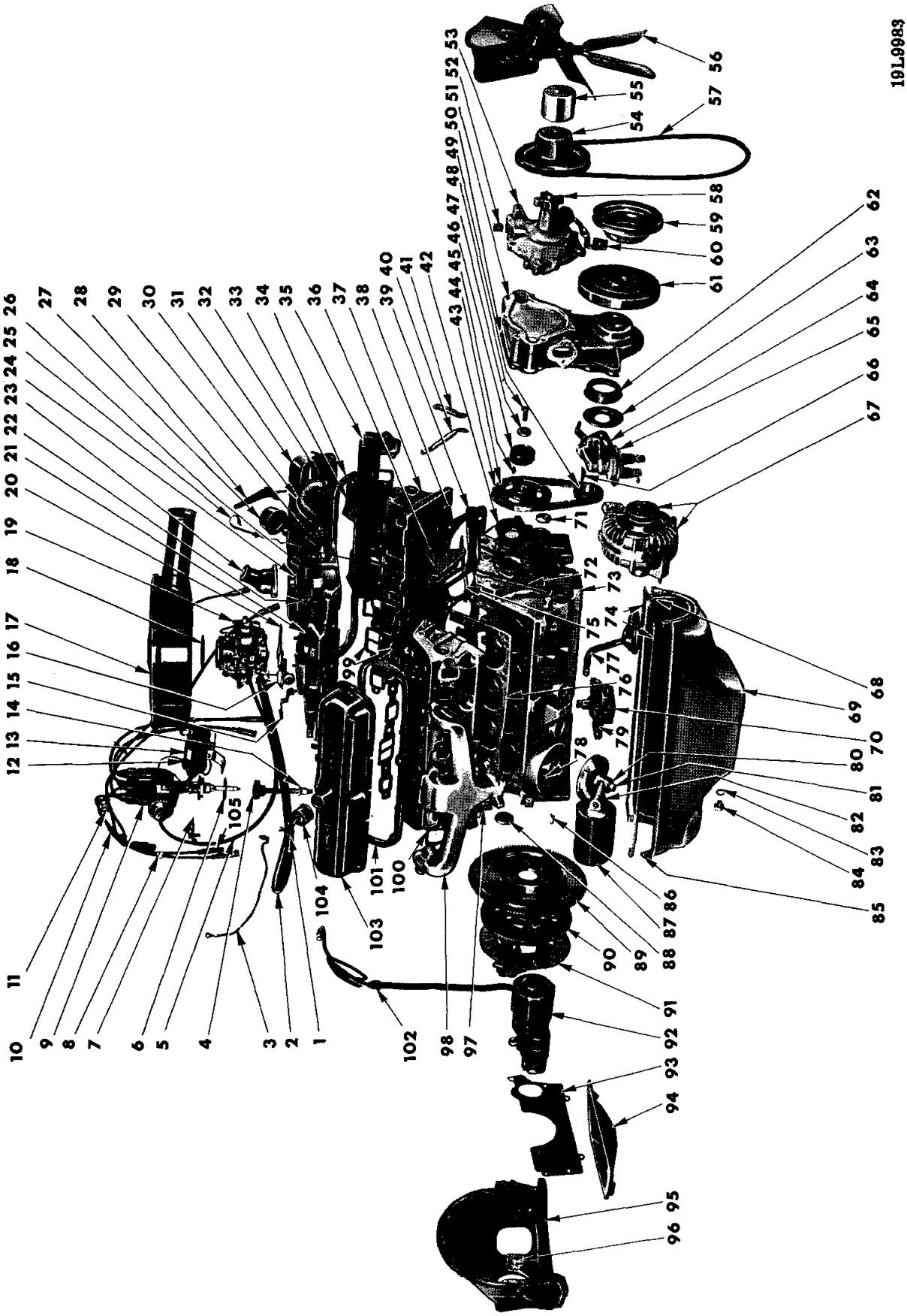

ENGINE EXTERNAL PARTS (V8 CYLINDER) - 273 CU. IN. DISPLACEMENT

MyMopar.com

ENGINE EXTERNAL PARTS (V8 CYLINDER) - 273 CU. IN. DISPLACEMENT

Ref. No.	Name	Part Type Code
1	Clamp	
2	Hose	10-02-53
3	Cable	Not Serviced
4	Shaft	10-09-1
5	Tube	8-37-320
6	Gasket	8-27-4
7	Clamp	8-27-26
8	Grommet	8-36-92
9	Distributor	8-27-1
10	Cable Set	8-36-1
11	Bracket	8-36-4
12	Coil	8-35-4
13	Bracket	8-35-41
14	Bushing	10-09-7
15	Bracket	14-26-6
16	Choke	14-39-45
17	Air Cleaner	14-29-2
18	Gasket	14-29-5
19	Carburetor	14-30-1
20	Gasket	14-30-2
21	Manifold	9-48-7
22	Sending Unit	8-37-155
23	Elbow	9-05-5
24	Thermostat	7-41-4
25	Indicator	10-03-4
26	Gasket	9-05-6
27	Air Cleaner	10-01-21
28	Bracket	14-06-10
29	Nipple	7-48-22
30	By-Pass Hose	7-14-9
31	Cover	9-03-28
32	Clamp	
33	Gasket	9-50-5
34	Gasket	9-03-29
35	Manifold	9-48-6
36	Bracket	8-28-36
37	Head	9-03-4
38	Gasket	9-03-5
39	Strap	8-28-15
40	Brace	9-48-155
41	Brace	9-48-155
42	Block (Serviced in 9-01-24)	
43	Chain	9-20-1
44	Sprocket	9-17-5
45	Key	9-17-5
46	Eccentric	9-15-2
47	Washer	9-15-10
48	Screw	
49	Sprocket	9-08-5
50	Gasket	9-23-17
51	Cover	9-23-5
52	Nipple	7-48-22
53	Pump	7-42-1
54	Pulley	7-06-14
55	Spacer	7-02-16
56	Fan	7-02-1
57	Belt	7-03-1
58	Hub	7-05-1
59	Pulley	7-06-1
60	Indicator	9-23-40
61	Damper	9-13-5
62	Oil Seal	9-23-18
63	Oil Slinger	9-07-17
64	Gasket	14-74-1
65	Pump	14-73-1
66	Key	9-08-5
67	Alternator	8-28-3
68	Gasket	10-24-1
69	Pan	10-24-4
70	Cover	10-07-7
71	Plug	9-02-16
72	Tube	10-03-7
73	Block (Serviced in 9-01-24)	
74	Gasket	10-24-1
75	Gasket (Serviced in 9-50-1)	
76	Gasket	9-03-5
77	Strainer w/Pipe	10-23-7
78	Plug	
79	Pump	10-07-6
80	Gasket	10-07-8
81	Bolt	
82	Base	10-26-12
83	Gasket	10-24-38
84	Plug	10-24-37
85	Gasket	10-24-1
86	Plug	9-02-17
87	Filter	10-26-6
88	Plug	9-16-17
89	Flywheel	9-45-1
90	Disc	6-13-1
91	Plate	6-14-1
92	Starting Motor	8-52-4
93	Seal	6-10-10
94	Pan	6-10-2
95	Housing	6-09-1
96	Pivot	6-22-15
97	Counterweight	9-58-12
98	Manifold	9-48-6
99	Gasket (Serviced in 9-50-1)	
100	Gasket	9-50-5
101	Gasket	9-03-29
102	Cable	8-01-17
103	Cover	9-03-28
104	Cap	10-02-66
105	Nipple	8-36-96

PARTS INDICATED BY NAME ONLY - ORDER BY DESCRIPTION

MyMopar.com

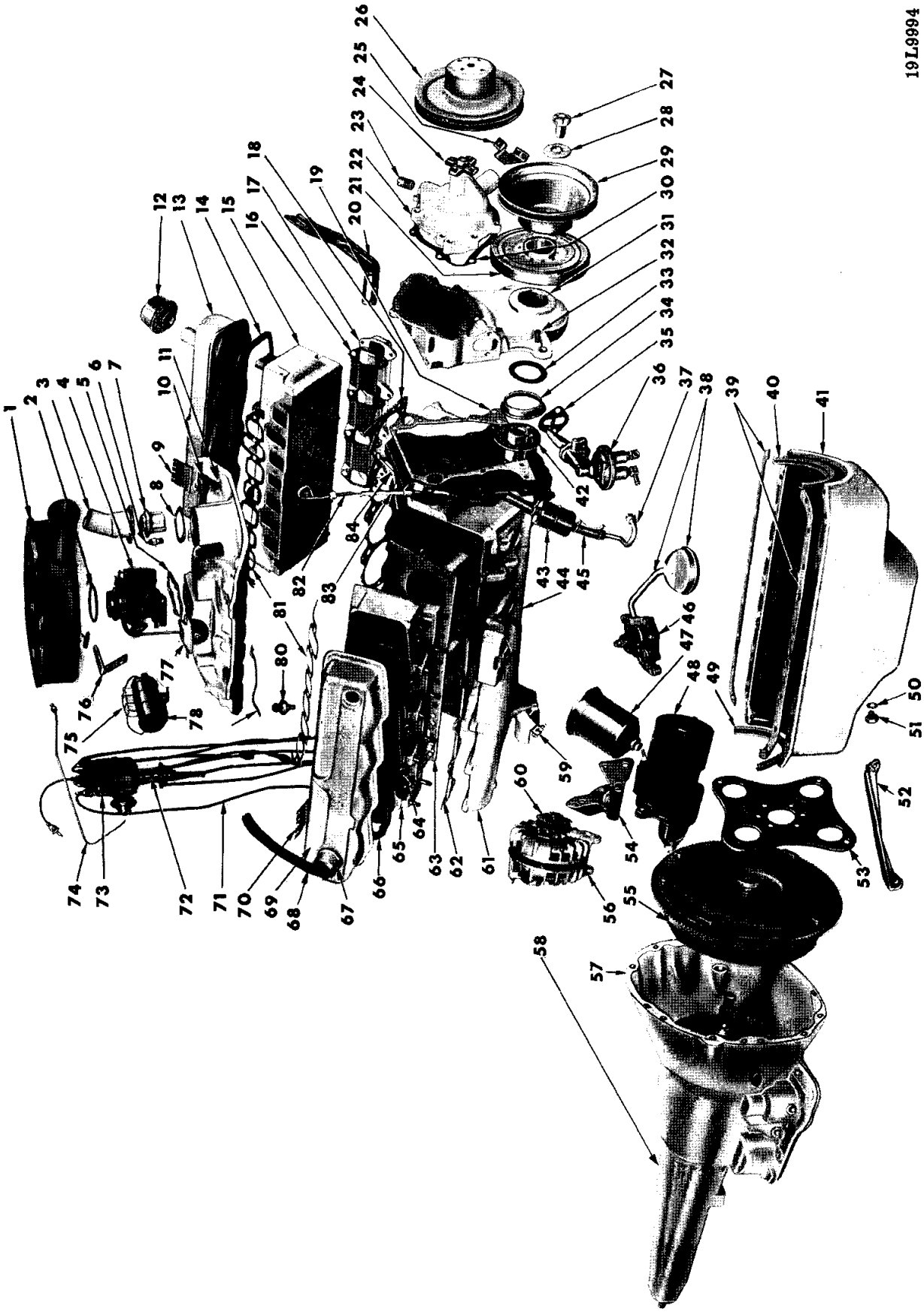

ENGINE EXTERNAL PARTS (V8 CYLINDER) - 318 CU. IN. DISPLACEMENT

MyMopar.com

ENGINE EXTERNAL PARTS (V8 CYLINDER) - 318 CU. IN. DISPLACEMENT

Ref. No.	Name	Part Type Code
1	Air Cleaner	14-29-7
2	Gasket	14-29-5
3	Elbow	9-05-5
4	Carburetor	14-30-1
5	Gasket	14-30-2
6	Sending Unit	8-37-155
7	Thermostat	7-41-4
8	Gasket	9-05-6
9	Bracket	8-36-4
10	Nipple	7-48-22
11	Manifold	9-48-6
12	Air Cleaner	10-01-21
13	Cover	9-03-28
14	Gasket	9-03-29
15	Head	9-03-4
16	Gasket	9-50-5
17	Manifold	9-48-6
18	Gasket	9-03-5
19	Gasket	9-23-17
20	Strap	8-28-15
21	Damper	9-13-5
22	Pump, Water	7-42-1
23	Nipple	7-48-22
24	Hub	7-05-1
25	Indicator	9-23-40
26	Pulley	7-06-14
27	Screw	9-07-8
28	Washer	9-07-22
29	Pulley	7-06-1
30	Gasket	7-44-3
31	Cover	9-23-5
32	Screw	
33	Gasket (Serviced in 9-23-18)	
34	Oil Seal	9-23-18
35	Gasket	14-74-1
36	Pump Package	14-73-1
37	Tube	14-89-2
38	Strainer w/Pipe	10-23-7
39	Gasket Set	10-24-1
40	Gasket Set	10-24-1
41	Pan	10-24-4
42	Oil Slinger	9-07-17
43	Filter	14-67-1
44	Block (Serviced in 9-01-24)	
45	Hose	14-67-2
46	Pump	10-07-6
47	Filter	10-26-6
48	Starter	8-52-4
49	Gasket (Serviced in 10-24-1)	
50	Gasket	10-24-38
51	Plug	10-24-37
52	Bracket	21-03-28
53	Plate	9-46-8
54	Bracket	8-28-36
55	Torque Converter	9-46-4
56	Alternator	8-28-3
57	Case, Transmission	21-03-1
58	Extension, Transmission	21-04-1
59	Shield	9-58-12
60	Pulley	8-28-3
61	Manifold	9-48-6
62	Gasket	9-50-5
63	Gasket	9-03-5
64	Spark Plug	8-36-114
65	Head	9-03-4
66	Gasket	9-03-29
67	Cap	10-02-66
68	Hose	10-02-53
69	Cover	9-03-28
70	Bracket	8-36-4
71	Cable Set	8-36-1
72	Distributor	8-27-4
73	Cap	8-27-71
74	Ground Cable	Not Serviced
75	Resistor	8-35-22
76	Bracket	14-06-10
77	Choke	14-39-45
78	Coil	8-35-4
79	Gasket (Serviced in 9-50-1)	
80	Switch	8-53-327
81	Gasket (Serviced in 9-50-1)	
82	Indicator	10-03-4
83	Tube	10-03-7
84	Gasket (Serviced in 9-50-1)	

PARTS INDICATED BY NAME ONLY - ORDER BY DESCRIPTION

MyMopar.com

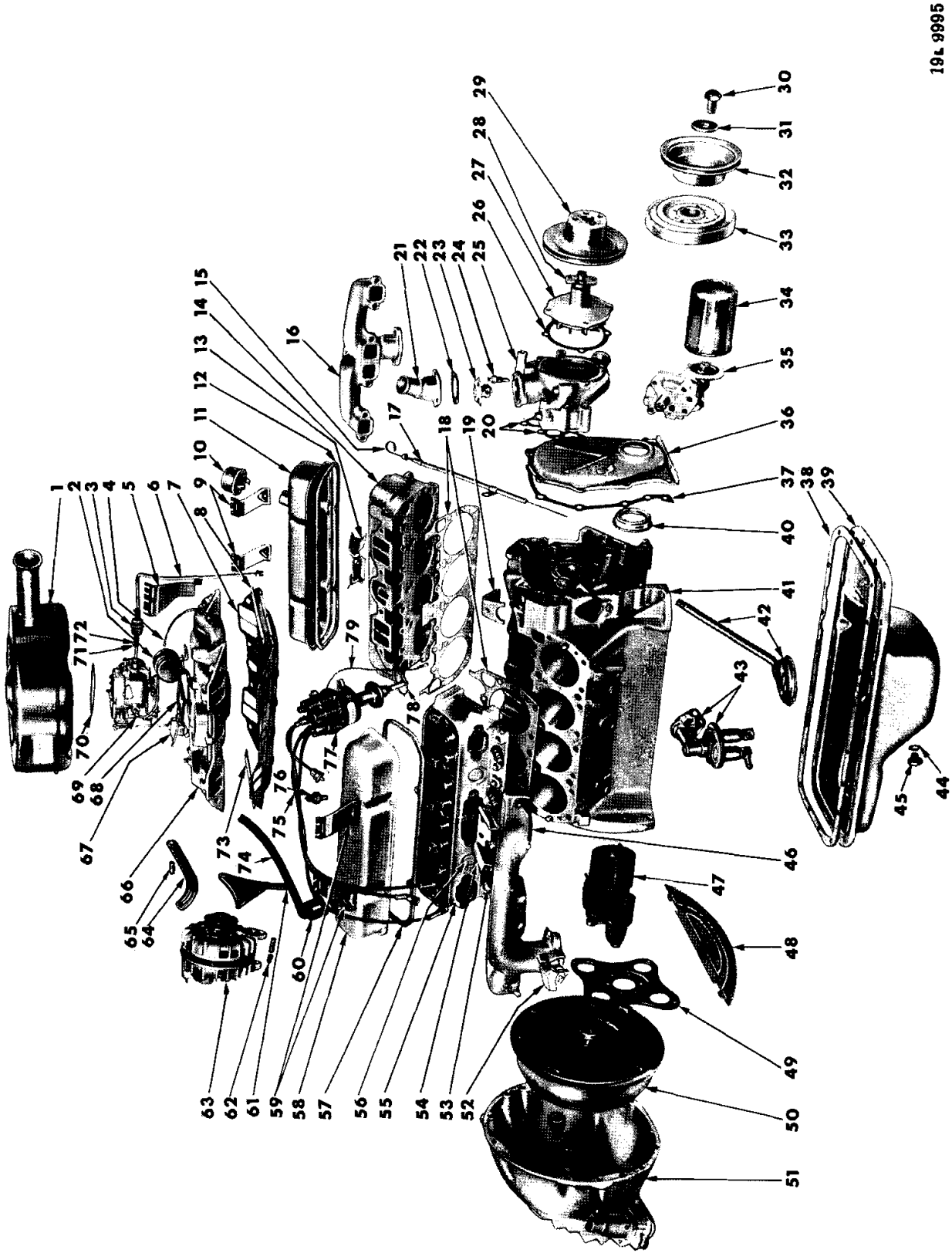

ENGINE EXTERNAL PARTS (V8 CYLINDER) - 361, 383, 413 AND 426 STD. CU. IN. DISPLACEMENT

MyMopar.com

ENGINE EXTERNAL PARTS (V8 CYLINDER) - 361, 383 AND 413 CU. IN. DISPLACEMENT

Ref. No.	Name	Part Type Code
1	Air Cleaner	14-29-2
2	Coil	8-35-4
3	Filter	14-67-1
4	Cable	8-36-49
5	Bracket	8-36-4
6	Tube	14-89-2
7	Gasket	9-50-6
8	Reinforcement	9-48-27
9	Bracket	8-36-4
10	Air Cleaner	10-01-21
11	Cover	9-03-28
12	Gasket	9-03-29
13	Shield	8-36-124
14	Head	9-03-4
15	Indicator	10-03-4
16	Manifold	9-48-6
17	Tube	10-03-7
18	Gasket	9-03-5
19	Clamp	8-27-26
20	Gasket	7-44-4
21	Elbow	9-05-5
22	Gasket	9-05-6
23	Thermostat	7-41-4
24	Sending Unit	8-37-155
25	Housing	7-43-1
26	Gasket	7-44-3
27	Pump	7-42-1
28	Hub	7-05-1
29	Pulley	7-06-14
30	Screw	9-07-8
31	Washer	9-07-22
32	Pulley	7-06-1
33	Damper	9-13-5
34	Filter	10-26-6
35	Pump	10-07-6
36	Cover	9-23-5
37	Gasket	9-23-17
38	Gasket	10-24-8
39	Pan	10-24-4
40	Oil Seal	9-23-18
41	Block (Serviced in Short Engine 9-01-24)	
42	Strainer w/Pipe	10-23-7
43	Pump Package, Fuel	14-73-1
44	Gasket	10-24-38
45	Plug	10-24-37
46	Manifold	9-48-6
47	Starter	8-52-4
48	Cover	21-03-6
49	Plate	9-46-8
50	Torque Converter	9-46-4
51	Case, Transmission	21-03-1
52	Shield	9-58-12
53	Spark Plug	8-36-114
54	Shield	8-36-124
55	Head	9-03-4
56	Plug	9-02-16
57	Gasket	9-03-29
58	Cover	9-03-28
59	Bracket	8-36-4
60	Cap	10-02-66
61	Bracket	8-28-36
62	Spacer	8-28-14
63	Alternator	8-28-3
64	Strap	8-28-15
65	Spacer	8-28-292
66	Manifold	9-48-7
67	Choke	14-39-45
68	Gasket	14-30-2
69	Carburetor	14-30-1
70	Gasket	14-29-5
71	Clamp	
72	Hose	14-67-2
73	Reinforcement	9-48-27
74	Hose	10-02-53
75	Cable Set	8-36-1
76	Switch	8-53-327
77	Distributor	8-27-1
78	Gasket	8-27-4
79	Lead	8-27-205

PARTS INDICATED BY NAME ONLY - ORDER BY DESCRIPTION

MyMopar.com

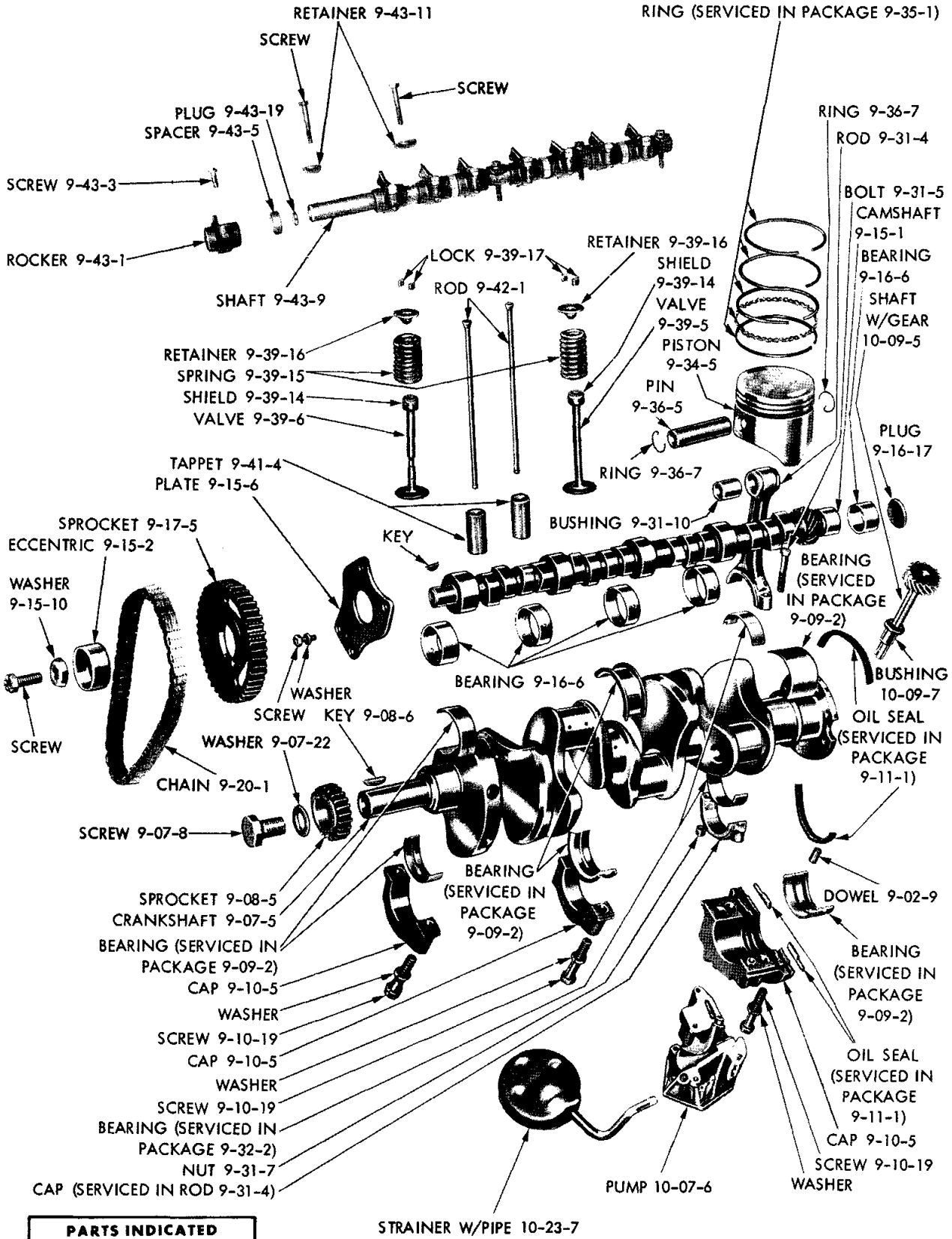

ENGINE INTERNAL PARTS (V8 CYLINDER) - 273 CU. IN. DISPLACEMENT

MyMopar.com

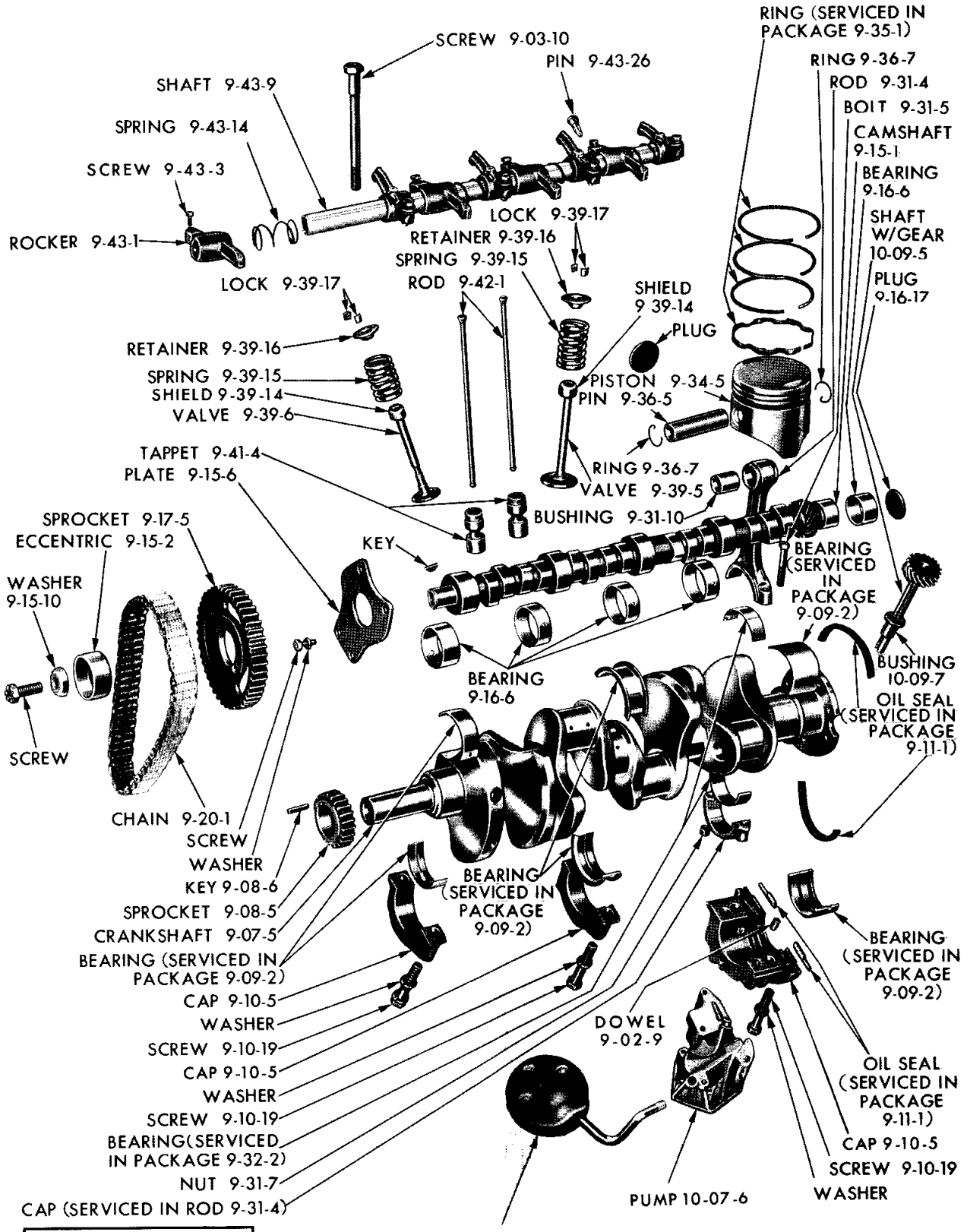

ENGINE INTERNAL PARTS (V8 CYLINDER) - 318 CU. IN. DISPLACEMENT

MyMopar.com

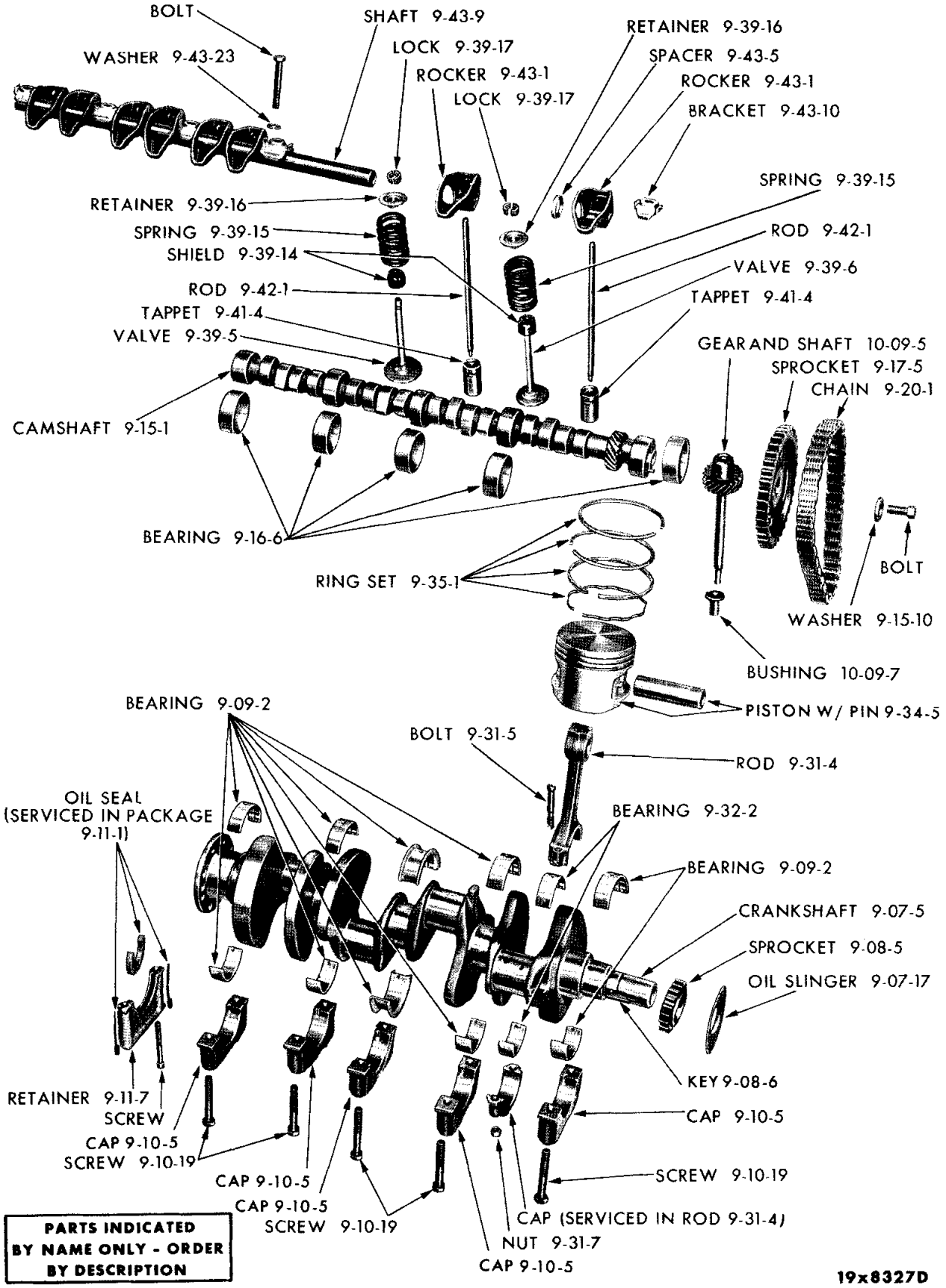

ENGINE INTERNAL PARTS (V8 CYLINDER) - 361, 383, 413 AND 426 STD. CU. IN. DISPLACEMENT

MyMopar.com

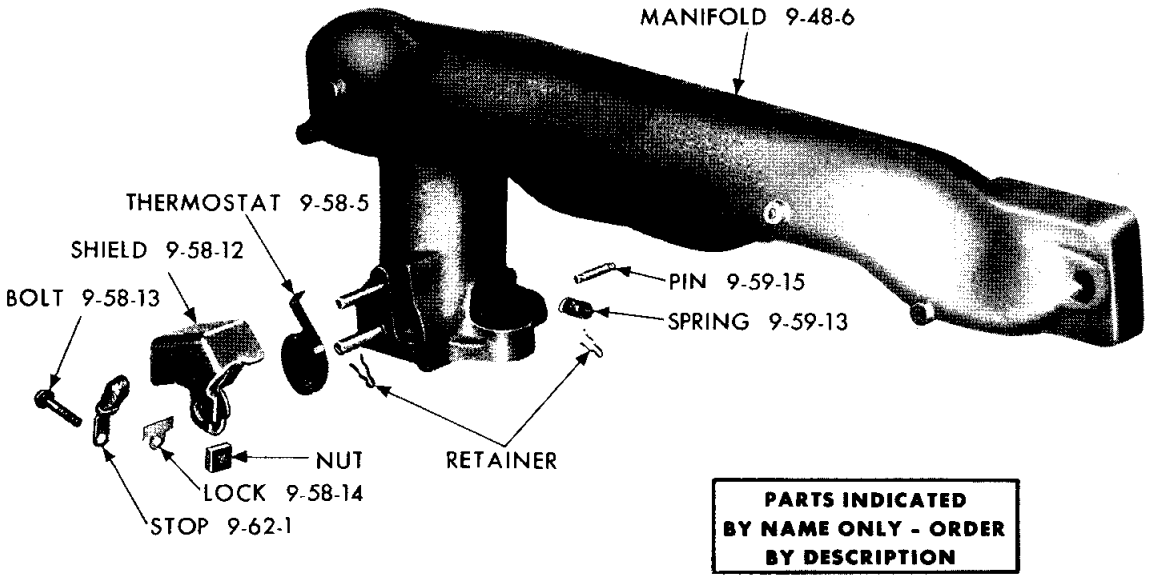

19x8318A

EXHAUST MANIFOLD AND HEAT CONTROLS - 361, 383, 413 AND 426 STD. CU. IN. DISPLACEMENT

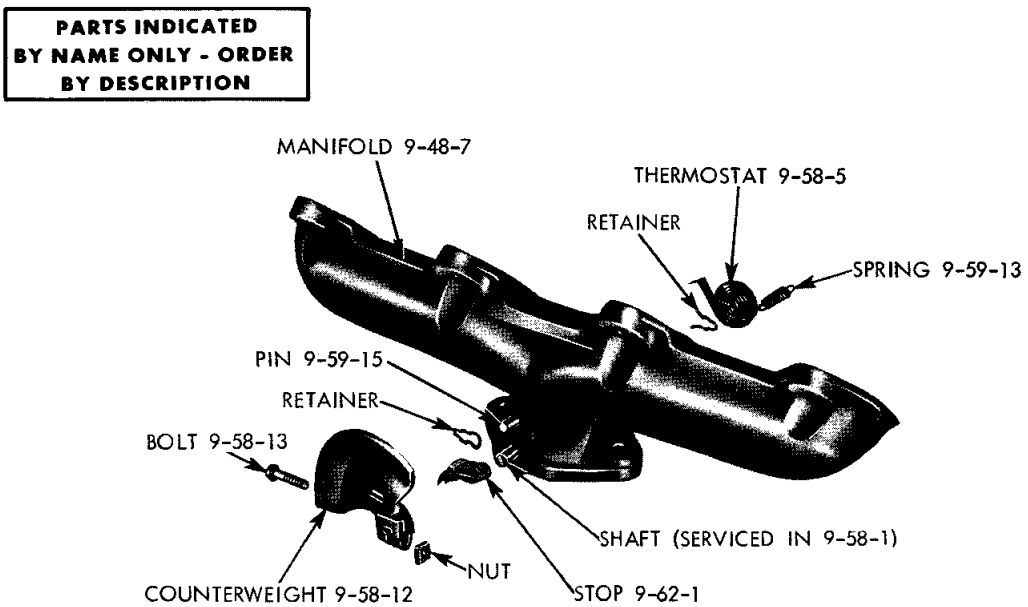

19a0158

ENGINE EXHAUST MANIFOLD - WITH HEAT CONTROLS

MyMopar.com

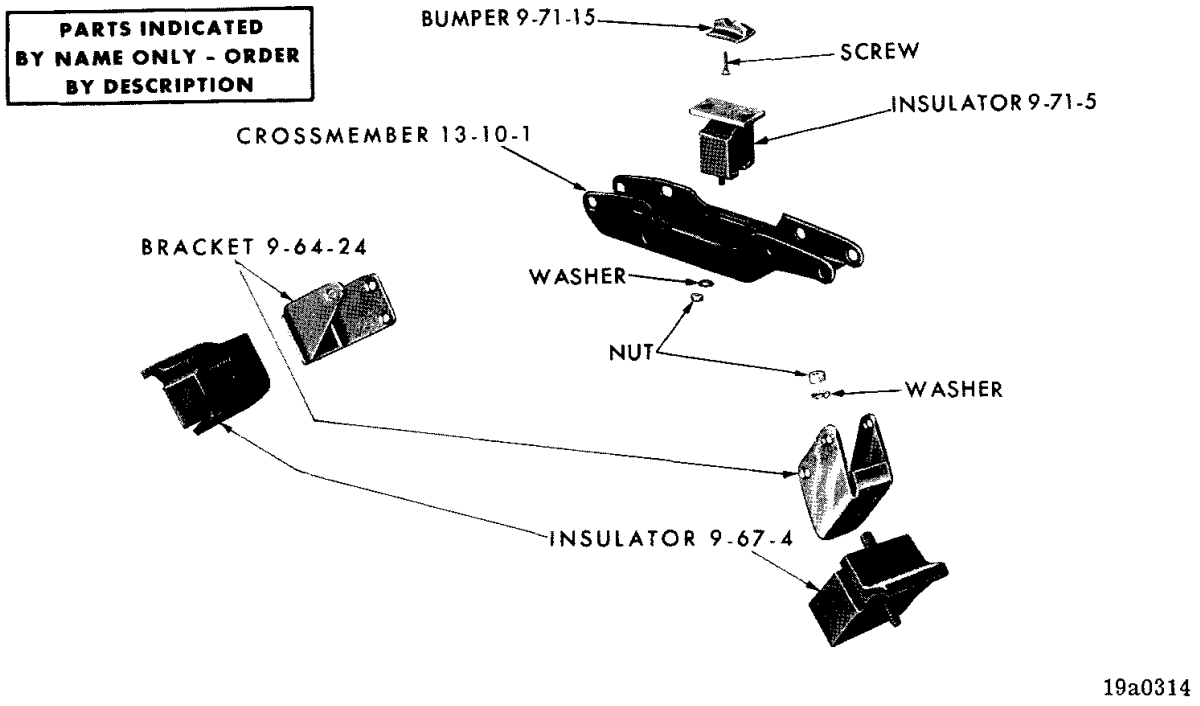

ENGINE MOUNTINGS (V8 CYLINDER) - VALIANT AND DART

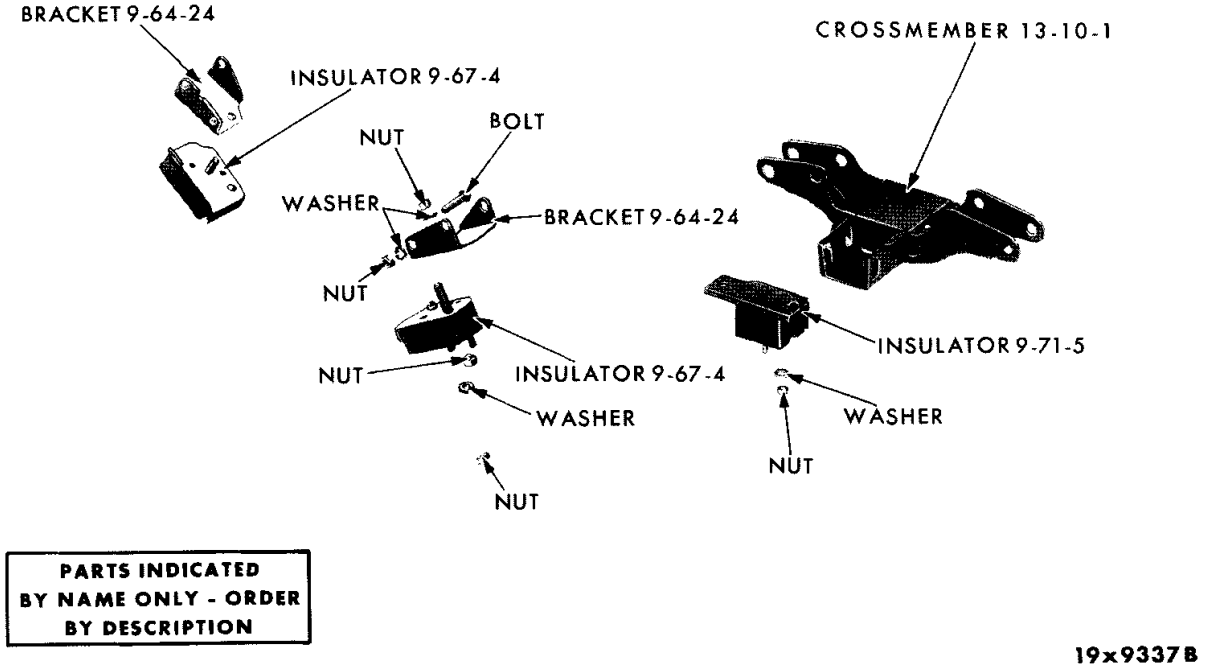

ENGINE MOUNTINGS (V8 CYLINDER) - BELVEDERE AND CORONET

MyMopar.com

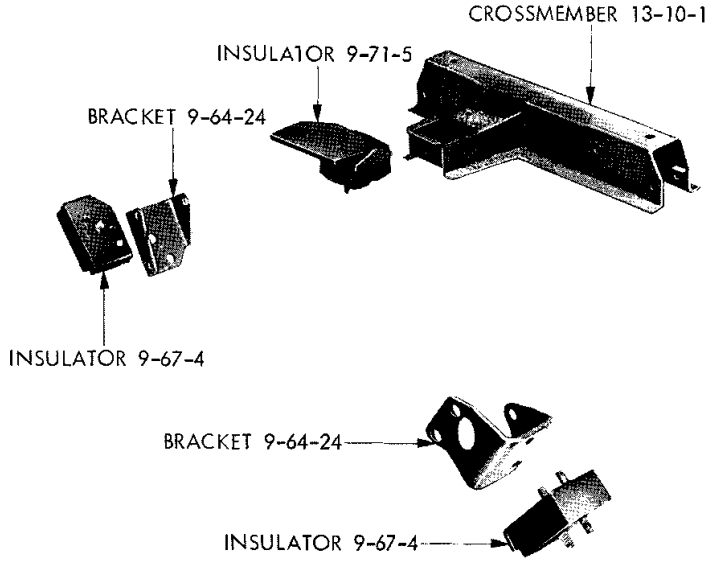

19a0265

ENGINE MOUNTINGS - PLYMOUTH, DODGE AND CHRYSLER

NOTES

CODE	PART NAME AND DESCRIPTION	CYL	PER CAR	VALIANT / DART	PLYMOUTH BELVEDERE / DODGE CORONET	PLYMOUTH FURY / DODGE POLARA / CHRYSLER	IMPERIAL

NOTES

TYPE LETTERS Indicate:

V - Valiant	R - Belvedere	P - Plymouth	C - Chrysler
L - Dart	W - Coronet	D - Dodge	Y - Imperial

★Indicates use as required.

⊟Indicates parts not listed in any previous parts book.

MyMopar.com

Prices and specifications subject to change without notice.

Printed in U.S.A.

NOTE: The following symbols are used in connection with engine numbers:
Engine numbers without symbols indicate "Standard Cylinders and Crankshaft Bearings".

The Letter "A" immediately following the engine number indicates Bore .020" (.508 MM.) Larger than Standard.
The Letter "B" immediately following the engine identification number indicates Main and Connecting Rod Bearings .010" (.245 MM.) Smaller than Standard.
The Letters "AB" immediately following the engine identification number indicates Cylinder Bore .020 (.508 MM.) Larger than Standard and the Main and Connecting Rod Bearings .010" (.254 MM.) Smaller than Standard.
The Letters in the circular pads at either end of the engine number are for the use of factory inspectors only and should not be connected with the engine number. Always mention Serial Numbers when ordering major assemblies.

EIGHT CYLINDER ENGINES

NOTE: It will be noted below, part numbers listed for the 426 cubic inch Engine may be identified, "Standard", or "Hemispherical". "Standard" indicates the 426 Engine designed for normal Street driving. "Hemispherical" indicates the racing version of the same Engine. Where parts are not specifically identified, they apply to all 426 Engines.

CODE	PART NAME AND DESCRIPTION	PER CAR	CUBIC INCH DISPLACEMENT 273	318	361	383	413	426
9-01-0	**ENGINE ASSEMBLY**							
9-01-5	GASKET SET, Engine V2, L2, R2, W2	1	2585 204					
	R2, W2, P2, D2	1	---- ---	*2585 202				
	R2, W2, P2, D2, C1, C2	1	---- ---	---- ---	2585 206	2585 206		
	D2, C2, C3, Y1	1	---- ---	---- ---	---- ---	---- ---	2585 208	
	R2, W2, P2, D2, 426 Std.	1	---- ---	---- ---	---- ---	---- ---	---- ---	2585 208
	R2, W2, 426 Hemispherical	1	---- ---	---- ---	---- ---	---- ---	---- ---	⊟2585 560

NOTE: Short Engine Assemblies Consists of: The Cylinder Block with Pistons and Rings, Crankshaft and Bearings, Connecting Rods and Bearings, Camshaft and Bearings, Camshaft Thrust Plate, Camshaft and Crankshaft Sprockets and Timing Chain. On the 8 Cylinder Short Engine Assemblies some of the above parts have been left off to obtain a greater interchangeability.

NOTE: When replacing the 273 Short Engine with Automatic Transmission order Part No. 2463 126 Insert.

9-01-24	SHORT ENGINE, V2, L2, R2, W2	1	2465 551					
	V2, L2, w/Four Barrel Carburetor	1	2536 089					
	w/Low Compression, Export, V2, L2, R2, W2	1	2465 553					
	R2, W2, P2, D2	1	---- ---	*2532 674				
	w/Low Compression, Export, R2, W2, P2, D2	1	---- ---	*2532 675				
	R2, W2	1	---- ---	---- ---	2532 678			
	w/Low Compression, Export, R2, W2	1	---- ---	---- ---	2532 679			
	w/10 to 1 Compression Ratio, R2, W2, P2, D2, C1, C2	1	---- ---	---- ---	---- ---	2532 680		
	w/9.2 to 1 Compression Ratio, P2, D2, C1 . .	1	---- ---	---- ---	---- ---	2532 681		
	w/Low Compression, Export, C1, C2	1	---- ---	---- ---	---- ---	2532 682		
	D2, C2, C3, Y1	1	---- ---	---- ---	---- ---	---- ---	2532 683	
	w/Low Compression, Export, C3, Y1	1	---- ---	---- ---	---- ---	---- ---	2532 684	
	R2, W2, P2, D2, 426 Std.	1	---- ---	---- ---	---- ---	---- ---	---- ---	2532 685

TYPE LETTERS Indicate: V - Valiant, L - Dart, R - Belvedere, W - Coronet, P - Plymouth, D - Dodge, C - Chrysler, Y - Imperial

★Indicates use as required. Numerals in parentheses ( ) refer to notes. Printed in U.S.A.
⊟Indicates parts not listed in any previous parts book. Prices and specifications subject to change without notice.
* Indicates change or addition. May 1965, Supersedes Nov. 30, 1964.

MyMopar.com

CODE	PART NAME AND DESCRIPTION	PER CAR	CUBIC INCH DISPLACEMENT 273	318	361	383	413	426
	EIGHT CYLINDER ENGINES							
9-01-0	**ENGINE ASSEMBLY - Cont'd**							
9-01-24	SHORT ENGINE - Cont'd w/12.5 to 1 Compression Ratio, R2, W2, 426 Hemispherical	1	---- ---	---- ---	---- ---	---- ---	---- ---	2536 906
9-02-0	**CYLINDER BLOCK**							
9-02-7	DOWEL, Cylinder Block to Clutch Housing or Torque Converter Housing	2	1122 532	1122 532	1122 532	1122 532	1122 532	1122 532
9-02-9	DOWEL, Cylinder Block to No. 5 Bearing Cap .	1	1408 853	1408 853				
9-02-16	PLUG, Core Hole.	2	2406 387					
	Core Hole 1.635.	★	2406 356	2406 356	2406 356	2406 356	2406 356	2406 356
	Core Hole 1.695	★	2406 575	2406 575	2406 575	2406 575	2406 575	2406 575
9-02-17	PLUG, Cylinder Block Oil Line	1	1324 464	1324 464				
9-03-0	**CYLINDER HEAD**							
9-03-4	HEAD, Cylinder.	2	2532 080	2402 116	2406 732	2406 732	2406 732	
	426 Std.	2	---- ---	---- ---	---- ---	---- ---	---- ---	2406 732
	426 Hemispherical . . .	2	---- ---	---- ---	---- ---	---- ---	---- ---	2531 108
	STUD, 426 Hemispherical	8	---- ---	---- ---	---- ---	---- ---	---- ---	⊟6026 243
	WASHER, 426 Hemispherical	8	---- ---	---- ---	---- ---	---- ---	---- ---	6026 141
	BOLT, 426 Hemispherical	16	---- ---	---- ---	---- ---	---- ---	---- ---	6026 142
	WASHER, 426 Hemispherical	16	---- ---	---- ---	---- ---	---- ---	---- ---	6026 140
9-03-5	GASKET, Cylinder Head	2	2463 338	2525 062	1851 579	1851 579	1851 579	
	426 Std.	2	---- ---	---- ---	---- ---	---- ---	---- ---	1851 579
	426 Hemispherical . . .	2	---- ---	---- ---	---- ---	---- ---	---- ---	2658 320
9-03-10	SCREW, Cylinder Head Short, 1/2" x 1 7/8" .	10	2463 258					
	Long, 1/2" x 3 5/8" . .	8	2463 259					
	Long, 1/2" x 4 5/8" . .	2	2463 260					
	Short, 1/2" x 2 7/8" . .	10	---- ---	1618 695				
	Long, 1/2" x 6.62" . .	10	---- ---	1618 696				
	Short, 7/8" x 1 27/32" .	24	---- ---	---- ---	1739 605	1739 605	1739 605	
	Long, 7/16" x 3 7/8" . .	10	---- ---	---- ---	1739 606	1739 606	1739 606	
	Short, 426 Std.	24	---- ---	---- ---	---- ---	---- ---	---- ---	1739 605
	Long, 426 Std.	10	---- ---	---- ---	---- ---	---- ---	---- ---	1739 606
	Long, 426 Hemispherical	10	---- ---	---- ---	---- ---	---- ---	---- ---	2468 192
	WASHER, 426 Hemispherical	10	---- ---	---- ---	---- ---	---- ---	---- ---	6026 141
9-03-11	NUT, Cylinder Head Stud, 426 Hemispherical . . .	8	---- ---	---- ---	---- ---	---- ---	---- ---	⊟2658 882

TYPE LETTERS Indicate: V - Valiant, L - Dart, R - Belvedere, W - Coronet, P - Plymouth, D - Dodge, C - Chrysler, Y - Imperial

★Indicates use as required. Numerals in parentheses ( ) refer to notes. Printed in U.S.A.

⊟Indicates parts not listed in any previous parts book. Prices and specifications subject to change without notice.

March 1966 Supersedes May 1965. * Indicates change or addition.

MyMopar.com

EIGHT CYLINDER ENGINES

9-03-0 CYLINDER HEAD - Cont'd

CODE	PART NAME AND DESCRIPTION	PER CAR	CUBIC INCH DISPLACEMENT 273	318	361	383	413	426
9-03-18	PLUG, Cylinder Head Core Hole 1.2605 . . .	★	2406 387	---- ---	2406 387	2406 387	2406 387	2406 387
	Core Hole 1.3280	★	---- ---	---- ---	2463 042	2463 042	2463 042	2463 042
	Core Hole, 426 Hemispherical	4	---- ---	---- ---	---- ---	---- ---	---- ---	1392 371
9-03-28	COVER, Cylinder Head, Right, w/Two Barrel Carburetor, V2, L2 . .	1	2532 699					
	Right, w/Two Barrel Carburetor, R2, W2 .	1	2465 543					
	Left, w/Two Barrel Carburetor	1	2465 383					
	Right, w/Four Barrel Carburetor, V2, L2 . .	1	2532 605					
	Left, w/Four Barrel Carburetor, V2, L2 . .	1	2532 602					
	Right	1	---- ---	2532 781				
	Left	1	---- ---	2402 746				
	Right, R2, W2	1	---- ---	---- ---	2468 171	2468 171		
	Right, P2, D2, C1, C2, C3	1	---- ---	---- ---	---- ---	2532 094	2532 094	
	Left, R2, W2, P2, D2, C1, C2, C3	1	---- ---	---- ---	2536 435	2536 435	2536 435	
	Right, Y1	1	---- ---	---- ---	---- ---	---- ---	2463 365	
	Left, Y1	1	---- ---	---- ---	---- ---	---- ---	2463 366	
	Right, R2, W2, 426 Std.	1	---- ---	---- ---	---- ---	---- ---	---- ---	2465 394
	Right, P2, D2, 426 Std.	1	---- ---	---- ---	---- ---	---- ---	---- ---	2532 253
	Left, R2, W2, 426 Std. .	1	---- ---	---- ---	---- ---	---- ---	---- ---	2463 857
	Left, P2, D2, 426 Std. .	1	---- ---	---- ---	---- ---	---- ---	---- ---	2536 695
	Right, 426 Hemispherical	1	---- ---	---- ---	---- ---	---- ---	---- ---	2532 715
	Left, 426 Hemispherical	1	---- ---	---- ---	---- ---	---- ---	---- ---	2468 219
	SCREW, w/WASHER .	10	6025 667					
	STUD, 426 Std.	12	---- ---	---- ---	6024 845	6024 845	6024 845	6024 845
	STUD, 426 Hemispherical . . .	20	---- ---	---- ---	---- ---	---- ---	---- ---	*6024 845
	NUT, w/WASHER . . .	★	---- ---	---- ---	6022 582	6022 582	6022 582	6022 582
9-03-29	GASKET, Cylinder Head Cover.	2	2463 290	2128 407	2463 168	2463 168	2463 168	
	426 Std.	2	---- ---	---- ---	---- ---	---- ---	---- ---	2463 168
	426 Hemispherical . . .	2	---- ---	---- ---	---- ---	---- ---	---- ---	2468 022
9-03-34	SEAL, Cylinder Head Core Hole Plug, 426 Hemispherical	4	---- ---	---- ---	---- ---	---- ---	---- ---	2128 962

9-05-0 CYLINDER HEAD WATER OUTLET ELBOW

9-05-5	ELBOW, 3/4" Neck Angle	1	1855 393	1855 393	1855 393	1855 393	1855 393	
	2" Neck Angle	1	1855 605	1855 605	1855 605	1855 605	1855 605	
	426 Std.	1	---- ---	---- ---	---- ---	---- ---	---- ---	1855 393
	426 Hemispherical . . .	1	---- ---	---- ---	---- ---	---- ---	---- ---	2536 726
	WASHER, 426 Hemispherical	2	---- ---	---- ---	---- ---	---- ---	---- ---	6022 190
9-05-6	GASKET, Elbow.	1	50 082	50 082	50 082	50 082	50 082	50 082

TYPE LETTERS Indicate: V - Valiant, L - Dart, R - Belvedere, W - Coronet, P - Plymouth, D - Dodge, C - Chrysler, Y - Imperial

★Indicates use as required. Numerals in parentheses ( ) refer to notes. Printed in U.S.A.

⊟Indicates parts not listed in any previous parts book. Prices and specifications subject to change without notice.

* Indicates change or addition. March 1966 Supersedes May 1965.

MyMopar.com

EIGHT CYLINDER ENGINES

9-07-0 CRANKSHAFT

CODE	PART NAME AND DESCRIPTION	PER CAR	CUBIC INCH DISPLACEMENT 273	318	361	383	413	426
9-07-5	CRANKSHAFT, w/Manual Trans.	1	2268 119					
	w/Automatic Trans., except Taxi	1	2463 551					
	w/Automatic Trans., w/Taxi	1	2268 119					
		1	---- ---	2268 119	2268 114	2268 114	2264 354	
	426 Std.	1	---- ---	---- ---	---- ---	---- ---	---- ---	2264 354
	426 Hemispherical	1	---- ---	---- ---	---- ---	---- ---	---- ---	2463 549
9-07-8	SCREW, Crankshaft 3/4" x 2 1/4"	1	1821 414	1821 414				
	3/4" x 1.62"	1	1821 177	1821 177				
		1	---- ---	---- ---	1731 525	1731 525	1731 525	1731 525
9-07-12	INSERT, Crankshaft Torque Converter Pilot, w/Automatic Trans.	1	2463 126					
	BUSHING, Crankshaft Trans. Drive Pinion, w/Manual Trans.	1	53 298	53 298	53 298	53 298	53 298	53 298
9-07-17	OIL SLINGER	1	1618 686	1618 686	1618 686	1618 686	1618 686	1618 686
9-07-22	WASHER, Crankshaft Screw	1	1855 561	1855 561	1855 561	1855 561	1855 561	1855 561

9-08-0 CRANKSHAFT SPROCKET

9-08-5	SPROCKET	1	*2463 385	*2463 385				
	UP TO Eng. Nos. A36-5-3, A38-5-3, A41-5-3	1	---- ---	---- ---	*2128 912	*2128 912	*2128 912	
	AFTER Eng. Nos. A36-5-3, A38-5-3, A41-5-3	1	---- ---	---- ---	*2532 491	*2532 491	*2532 491	
	426 Std. UP TO Eng. No. A42-5-3	1	---- ---	---- ---	---- ---	---- ---	---- ---	*2128 912
	426 Std. AFTER Eng. No. A42-5-3	1	---- ---	---- ---	---- ---	---- ---	---- ---	*2532 491
	426 Hemispherical	1	---- ---	---- ---	---- ---	---- ---	---- ---	2205 568
	KEY	1	152 191	152 191	152 191	152 191	152 191	152 191

9-09-0 CRANKSHAFT BEARING PACKAGE

NOTE: When .001 thicker wall crankshaft main bearings are used for engines in production a Maltese Cross is stamped on the model pad of the cylinder block.

NOTE: Crankshaft Bearing Packages consist of one upper and one lower Bearing.

9-09-2	BEARING PACKAGE, Nos. 1, 2 and 4 Std.	3	2084 005	2084 005				
	.001 U/S.	3	2084 006	2084 006				
	.002 U/S.	3	2084 007	2084 007				
	.003 U/S.	3	2275 387	2275 387				
	.010 U/S.	3	2084 008	2084 008				
	.012 U/S.	3	2275 388	2275 388				
	No. 3 Std., 426 Std.	1	1879 627	1879 627	1818 524	1818 524	1879 378	1879 378
	.001 U/S., 426 Std.	1	1879 628	1879 628	1818 525	1818 525	1879 379	1879 379
	.002 U/S., 426 Std.	1	1879 629	1879 629	1818 526	1818 526	1879 380	1879 380

TYPE LETTERS indicate: V - Valiant, L - Dart, R - Belvedere, W - Coronet, P - Plymouth, D - Dodge, C - Chrysler, Y - Imperial

★Indicates use as required. Numerals in parentheses ( ) refer to notes. Printed in U.S.A.

⊟Indicates parts not listed in any previous parts book. Prices and specifications subject to change without notice.

March 1966 Supersedes May 1965. * Indicates change or addition.

MyMopar.com

EIGHT CYLINDER ENGINES

9-09-0 CRANKSHAFT BEARING PACKAGE - Cont'd

CODE	PART NAME AND DESCRIPTION	PER CAR	CUBIC INCH DISPLACEMENT 273	318	361	383	413	426
9-09-2	BEARING PACKAGE - Cont'd							
	.003 U/S., 426 Std. . .	1	2275 389	2275 389	1818 527	1818 527	1879 381	1879 381
	.010 U/S., 426 Std. . .	1	1879 630	1879 630	1818 528	1818 528	1879 382	1879 382
	.012 U/S., 426 Std. . .	1	2275 390	2275 390	1818 529	1818 529	1879 383	1879 383
	No. 5 Std.	1	1643 151	1643 151				
	.001 U/S.	1	1643 152	1643 152				
	.002 U/S.	1	1643 153	1643 153				
	.003 U/S.	1	1643 154	1643 154				
	.010 U/S.	1	1643 155	1643 155				
	.012 U/S.	1	1643 156	1643 156				
	No. 1 Std., 426 Std. . .	1	---- ---	---- ---	2084 810	2084 810	2084 814	2084 814
	.001 U/S., 426 Std. . .	1	---- ---	---- ---	2084 811	2084 811	2084 815	2084 815
	.002 U/S., 426 Std. . .	1	---- ---	---- ---	2084 812	2084 812	2084 816	2084 816
	.003 U/S., 426 Std. . .	1	---- ---	---- ---	2275 391	2275 391	2275 395	2275 395
	.010 U/S., 426 Std. . .	1	---- ---	---- ---	2084 813	2084 813	2084 817	2084 817
	.012 U/S., 426 Std. . .	1	---- ---	---- ---	2275 392	2275 392	2275 396	2275 396
	Nos. 2, 4 and 5 Std., 426 Std.	3	---- ---	---- ---	2084 833	2084 833	2084 829	2084 829
	.001 U/S., 426 Std. . .	3	---- ---	---- ---	2084 834	2084 834	2084 830	2084 830
	.002 U/S., 426 Std. . .	3	---- ---	---- ---	2084 835	2084 835	2084 831	2084 831
	.003 U/S., 426 Std. . .	3	---- ---	---- ---	2275 393	2275 393	2275 397	2275 397
	.010 U/S., 426 Std. . .	3	---- ---	---- ---	2084 836	2084 836	2084 832	2084 832
	.012 U/S., 426 Std. . .	3	---- ---	---- ---	2275 394	2275 394	2275 398	2275 398
	No. 1 Std., 426 Hemispherical	1	---- ---	---- ---	---- ---	---- ---	---- ---	2448 379
	Nos. 2, 4 and 5 Std., 426 Hemispherical . .	3	---- ---	---- ---	---- ---	---- ---	---- ---	2448 380
	No. 3 Std., 426 Hemispherical	1	---- ---	---- ---	---- ---	---- ---	---- ---	2448 381

9-10-0 CRANKSHAFT BEARING CAP

CODE	PART NAME AND DESCRIPTION	PER CAR	273	318	361	383	413	426
9-10-2	OIL SEAL PACKAGE, Crankshaft Bearing No. 5 Cap	1	1326 091	1326 091				
9-10-5	CAP, Nos. 1, 2 and 4 . .	3	1632 519	1632 519	1852 914	1852 914		
	No. 3, except Taxi . . .	1	*2463 582					
	No. 3, w/Taxi	1	2463 582					
	No. 3	1	---- ---	2463 582	1852 915	1852 915		
	No. 5	1	2275 446	2275 446	2206 315	2206 315		
	Nos. 1, 2 and 4, 426 Std.	3	---- ---	---- ---	---- ---	---- ---	1852 910	1852 910
	No. 3, 426 Std.	1	---- ---	---- ---	---- ---	---- ---	1852 911	1852 911
	No. 5, 426 Std.	1	---- ---	---- ---	---- ---	---- ---	2206 316	2206 316
9-10-19	SCREW, Crankshaft Bearing Cap	10	1618 695	1618 695	1408 867	1408 867	1408 867	
	426 Std.	10	---- ---	---- ---	---- ---	---- ---	---- ---	1408 867
	426 Hemispherical . . .	★	---- ---	---- ---	---- ---	---- ---	---- ---	*6025 048
9-10-26	WASHER, Crankshaft Bearing Cap Bolt, 426 Hemispherical . .	10	---- ---	---- ---	---- ---	---- ---	---- ---	2468 135
	WASHER, Crankshaft Bearing Cap Bolt, Side, 426 Hemishperical . .	6	---- ---	---- ---	---- ---	---- ---	---- ---	1536 242

TYPE LETTERS Indicate: V - Valiant, L - Dart, R - Belvedere, W - Coronet, P - Plymouth, D - Dodge, C - Chrysler, Y - Imperial

★Indicates use as required. Numerals in parentheses ( ) refer to notes. Printed in U.S.A.

⊟Indicates parts not listed in any previous parts book. Prices and specifications subject to change without notice.

* Indicates change or addition. March 1966 Supersedes May 1965.

MyMopar.com

CODE	PART NAME AND DESCRIPTION	PER CAR	CUBIC INCH DISPLACEMENT 273	318	361	383	413	426
	EIGHT CYLINDER ENGINES							
9-11-0	**CRANKSHAFT REAR BEARING OIL SEAL**							
9-11-1	OIL SEAL PACKAGE . .	1	1326 093	1326 093				
		1	---- ---	---- ---	2275 365	2275 365	2275 365	2275 365
9-11-7	RETAINER, 426 Std. . . .	1	---- ---	---- ---	1945 473	1945 473	1945 473	1945 473
	426 Hemispherical . . .	1	---- ---	---- ---	---- ---	---- ---	---- ---	2536 597
	SCREW	2	---- ---	---- ---	9418 005	9418 005	9418 005	9418 005
9-13-0	**CRANKSHAFT VIBRATION DAMPER**							
9-13-5	DAMPER	1	1947 235					
	w/Manual Trans. . . .	1	---- ---	1947 235				
	w/Automatic Trans. . .	1	---- ---	2402 090				
	426 Std.	1	---- ---	---- ---	2275 897	2275 897	2275 897	2275 897
	426 Hemispherical . . .	1	---- ---	---- ---	---- ---	---- ---	---- ---	2532 795
9-15-0	**CAMSHAFT**							
9-15-1	CAMSHAFT, w/Two Barrel Carburetor . .	1	2463 360					
	w/Four Barrel Carburetor, V2, L2 . .	1	2465 679					
		1	---- ---	2268 990	2268 405			
	w/Two Barrel Carburetor, P2, D2, C1 . .	1	---- ---	---- ---	---- ---	2268 405		
	w/Four Barrel Carburetor, R2, W2, P2 . .	1	---- ---	---- ---	---- ---	2129 203		
	w/Four Barrel Carburetor, D2, C1, C2 . .	1	---- ---	---- ---	---- ---	2268 405		
	w/Four Barrel Carburetor, D2, C3, Y1 . .	1	---- ---	---- ---	---- ---	---- ---	2532 190	
	w/Four Barrel Carburetor, D2 Police, C2, C3 Special	1	---- ---	---- ---	---- ---	---- ---	2129 203	
	426 Std.	1	---- ---	---- ---	---- ---	---- ---	---- ---	2129 203
	CAMSHAFT PACKAGE, w/Valve TAPPET, Assembly, 426 Hemispherical . . .	1	---- ---	---- ---	---- ---	---- ---	---- ---	2532 749
9-15-2	ECCENTRIC, Camshaft. .	1	1618 718	1618 718				
9-15-6	PLATE, Sprocket Thrust	1	1946 992	1946 992				
9-15-10	WASHER, Sprocket Retaining Screw	1	1618 732	1618 732				
	426 Std.	1	---- ---	---- ---	6023 053	6023 053	6023 053	6023 053
9-16-0	**CAMSHAFT BEARING**							
9-16-6	BEARING, Camshaft							
	No. 1	1	1632 522	1632 522	1821 771	1821 771	1821 771	1821 771
	No. 2	1	1632 523	1632 523	1821 772	1821 772	1821 772	1821 772
	No. 3	1	1632 524	1632 524	1821 773	1821 773	1821 773	1821 773
	No. 4	1	1632 525	1632 525	1821 774	1821 774	1821 774	1821 774
	No. 5	1	1632 526	1632 526	1821 775	1821 775	1821 775	1821 775
9-16-17	PLUG, Camshaft Rear Bearing	1	1821 722	1821 722	2402 905	2402 905	2402 905	2402 905

TYPE LETTERS Indicate: V - Valiant, L - Dart, R - Belvedere, W - Coronet, P - Plymouth, D - Dodge, C - Chrysler, Y - Imperial

★Indicates use as required. Numerals in parentheses ( ) refer to notes. Printed in U.S.A.

⊟Indicates parts not listed in any previous parts book. Prices and specifications subject to change without notice.

March 1966 Supersedes May 1965. * Indicates change or addition.

MyMopar.com

EIGHT CYLINDER ENGINES

CODE	PART NAME AND DESCRIPTION	PER CAR	CUBIC INCH DISPLACEMENT 273	318	361	383	413	426
9-17-0	**CAMSHAFT SPROCKET**							
9-17-5	SPROCKET	1	*2463 386	*2463 386				
	UP TO Eng. Nos. A-36-5-3, A38-5-3, A41-5-3	1	---- ---	---- ---	*1737 622	*1737 622	*1737 622	
	AFTER Eng. Nos. A36-5-3, A38-5-3, A41-5-3	1	---- ---	---- ---	*2532 490	*2532 490	*2532 490	
	426 Std. UP TO Eng. No. A42-5-3	1	---- ---	---- ---	---- ---	---- ---	---- ---	*1737 622
	426 Std. AFTER Eng. No. A42-5-3	1	---- ---	---- ---	---- ---	---- ---	---- ---	*2532 490
	426 Hemispherical . . .	1	---- ---	---- ---	---- ---	---- ---	---- ---	⊟2463 037
	SCREW, Hemispherical	1	---- ---	---- ---	---- ---	---- ---	---- ---	⊟6026 050
	KEY	1	106 751	106 751				
9-17-7	WASHER, Camshaft Sprocket Retaining Screw, 426 Hemispherical.	1	---- ---	---- ---	6023 053	6023 053	6023 053	2532 281
9-20-0	**TIMING CHAIN**							
9-20-1	CHAIN	1	*2463 384	*2463 384				
	UP TO Eng. Nos. A36-5-3, A38-5-3, A41-5-3	1	---- ---	---- ---	*2202 499	*2202 499	*2202 499	
	AFTER Eng. Nos. A36-5-3, A38-5-3, A41-5-3	1	---- ---	---- ---	*2532 492	*2532 492	*2532 492	
	426 Std. UP TO Eng. No. A42-5-3	1	---- ---	---- ---	---- ---	---- ---	---- ---	*2202 499
	426 Std. AFTER Eng. No. A42-5-3	1	---- ---	---- ---	---- ---	---- ---	---- ---	*2532 492
	426 Hemispherical . . .	1	---- ---	---- ---	---- ---	---- ---	---- ---	2205 569
9-23-0	**CHAIN CASE COVER**							
9-23-5	COVER	1	1944 773	1944 773	2120 627	2120 627	2120 627	2120 627
	WASHER	12	---- ---	---- ---	6022 181	6022 181	6022 181	6022 181
9-23-17	GASKET, Cover.	1	2129 012	2129 012	2264 794	2264 794	2264 794	2264 794
9-23-18	OIL SEAL, Cover	1	1618 683	1618 683	1737 771	1737 771	1737 771	1737 771
9-23-40	INDICATOR, Timing . . .	1	1947 236	1947 236				
9-31-0	**CONNECTING ROD**							
	NOTE: Connecting Rod includes Bearing Cap, Bolt, Nut, Lockwasher and Bushing, but does not include Bearing.							
9-31-4	ROD	8	2406 785	2406 785	2406 766	2406 766	2406 770	
	426 Std.	8	---- ---	---- ---	---- ---	---- ---	---- ---	2406 770
	426 Hemispherical . . .	8	---- ---	---- ---	---- ---	---- ---	---- ---	2532 709
9-31-5	BOLT, Bearing Cap . . .	16	1944 865	1944 865	1737 694	1737 694	1737 694	
	426 Std.	16	---- ---	---- ---	---- ---	---- ---	---- ---	1737 694
	426 Hemispherical . . .	16	---- ---	---- ---	---- ---	---- ---	---- ---	2468 005
9-31-7	NUT, Bearing Cap Bolt .	16	1737 695	1737 695	1737 695	1737 695	1737 695	
	426 Std.	16	---- ---	---- ---	---- ---	---- ---	---- ---	1737 695
	426 Hemispherical . . .	16	---- ---	---- ---	---- ---	---- ---	---- ---	2468 006

TYPE LETTERS Indicate: V - Valiant, L - Dart, R - Belvedere, W - Coronet, P - Plymouth, D - Dodge, C - Chrysler, Y - Imperial

★Indicates use as required. Numerals in parentheses ( ) refer to notes. Printed in U.S.A.

⊟Indicates parts not listed in any previous parts book. Prices and specifications subject to change without notice.

* Indicates change or addition. March 1966 Supersedes May 1965.

MyMopar.com

EIGHT CYLINDER ENGINES

9-31-0 CONNECTING ROD- Cont'd

CODE	PART NAME AND DESCRIPTION	PER CAR	CUBIC INCH DISPLACEMENT 273	318	361	383	413	426
9-31-10	BUSHING	8	1618 701	1618 701				

9-32-0 CONNECTING ROD BEARING PACKAGES

NOTE: When .001 thicker wall connecting rod bearings are used for engines in production a Maltese Cross is stamped on the model pad of the cylinder block.

NOTE: Connecting Rod Bearing Packages consists of one upper and one lower Bearing.

9-32-2	BEARING PACKAGE, Std.	8	1879 617	1879 617	1818 698	1818 698	1818 698	
	.001 U/S.	8	1879 618	1879 618	1818 699	1818 699	1818 699	
	.002 U/S.	8	1879 619	1879 619	1818 700	1818 700	1818 700	
	.003 U/S.	8	1879 620	1879 620	1818 701	1818 701	1818 701	
	.010 U/S.	8	1879 621	1879 621	1818 702	1818 702	1818 702	
	.012 U/S.	8	1879 622	1879 622	1818 703	1818 703	1818 703	
	Std., 426 Std.	8	---- ---	---- ---	---- ---	---- ---	---- ---	1881 794
	.001 U/S., 426 Std. . .	8	---- ---	---- ---	---- ---	---- ---	---- ---	1881 795
	.002 U/S., 426 Std. . .	8	---- ---	---- ---	---- ---	---- ---	---- ---	1881 796
	.003 U/S., 426 Std. . .	8	---- ---	---- ---	---- ---	---- ---	---- ---	2275 413
	.010 U/S., 426 Std. . .	8	---- ---	---- ---	---- ---	---- ---	---- ---	1881 797
	.012 U/S., 426 Std. . .	8	---- ---	---- ---	---- ---	---- ---	---- ---	2275 414
	Std., 426 Hemispherical	8	---- ---	---- ---	---- ---	---- ---	---- ---	2525 484
	.001 U/S. 426 Hemispherical . . .	8	---- ---	---- ---	---- ---	---- ---	---- ---	*2808 219
	.002 U/S. 426 Hemispherical . . .	8	---- ---	---- ---	---- ---	---- ---	---- ---	*2808 220
	.003 U/S. 426 Hemispherical . . .	8	---- ---	---- ---	---- ---	---- ---	---- ---	*2808 221
	.010 U/S. 426 Hemispherical . . .	8	---- ---	---- ---	---- ---	---- ---	---- ---	*2808 222
	.011 U/S. 426 Hemispherical . . .	8	---- ---	---- ---	---- ---	---- ---	---- ---	⊟2808 342
	.012 U/S. 426 Hemispherical . . .	8	---- ---	---- ---	---- ---	---- ---	---- ---	*2808 223

NOTES

MyMopar.com

CODE	PART NAME AND DESCRIPTION	PER CAR	CUBIC INCH DISPLACEMENT					
			273	318	361	383	413	426

EIGHT CYLINDER ENGINES

TYPE LETTERS Indicate: V - Valiant, L - Dart, R - Belvedere, W - Coronet, P - Plymouth, D - Dodge, C - Chrysler, Y - Imperial

★Indicates use as required.
⊟Indicates parts not listed in any previous parts book.
Numerals in parentheses ( ) refer to notes.
Prices and specifications subject to change without notice.
Printed in U.S.A.
March 1966.

MyMopar.com

EIGHT CYLINDER ENGINES

9-34-0 PISTON, W/PIN

NOTE: The following Pistons include Pin and Pin Retaining Rings.

CODE	PART NAME AND DESCRIPTION	PER CAR	CUBIC INCH DISPLACEMENT 273	318	361	383	413	426
9-34-5	PISTON, Std., 3.62" Bore, w/Two Barrel Carburetor	8	2495 072					
	.005 O/S., From 3.62" Bore, w/Two Barrel Carburetor	8	2495 073					
	.020 O/S., From 3.62" Bore, w/Two Barrel Carburetor	8	2495 074					
	.040 O/S., From 3.62" Bore, w/Two Barrel Carburetor	8	2495 075					
	PISTON, Std., 3.62" Bore Nos. 1, 3, 5 and 7, w/Four Barrel Carburetor	4	2585 267					
	Std., 3.62" Bore, Nos. 2,4,6 and 8, w/Four Barrel Carburetor . .	4	2585 268					
	.005 O/S., From 3.62" Bore, Nos. 1,3,5 and 7, w/Four Barrel Carburetor	4	2585 269					
	.005 O/S., From 3.62" Bore, Nos. 2,4,6 and 8, w/Four Barrel Carburetor	4	2585 270					
	.020 O/S., From 3.62" Bore, Nos. 1,3,5 and 7, w/Four Barrel Carburetor	4	2585 271					
	.020 O/S., From 3.62" Bore, Nos. 2,4,6 and 8, w/Four Barrel Carburetor	4	2585 272					
	.040 O/S From 3.62" Bore Nos. 1, 3, 5 and 7 w/Four Barrel Carburetor	4	2585 273					
	.040 O/S From 3.62" Bore Nos. 2, 4, 6 and 8 w/Four Barrel Carburetor	4	2585 274					
	Std., 3.62" Bore, L. C. Export.	8	2525 012					
	.005 O/S., From 3.62" Bore, L. C. Export . .	8	2525 013					
	.020 O/S., From 3.62" Bore, L.C. Export . .	8	2525 014					
	Std., 3.91" Bore	8	---- ---	1843 004				
	.005 O/S., From 3.91" Bore	8	---- ---	1843 005				
	.020 O/S., From 3.91" Bore	8	---- ---	1843 006				

TYPE LETTERS Indicate: V - Valiant, L - Dart, R - Belvedere, W - Coronet, P - Plymouth, D - Dodge, C - Chrysler, Y - Imperial

★Indicates use as required. Numerals in parentheses ( ) refer to notes. Printed in U.S.A.
⊟Indicates parts not listed in any previous parts book. Prices and specifications subject to change without notice.

MyMopar.com

EIGHT CYLINDER ENGINES

9-34-0 PISTON, W/PIN - Cont'd

CODE	PART NAME AND DESCRIPTION	PER CAR	CUBIC INCH DISPLACEMENT 273	318	361	383	413	426
9-34-5	PISTON - Cont'd							
	.040 O/S., From 3.91 Bore	8	---- ---	1843 007				
	Std., 3.91" Bore, L. C. Export	8	---- ---	1843 316				
	.005 O/S., From 3.91" Bore, L. C. Export . .	8	---- ---	1843 317				
	.020 O/S., From 3.91" Bore, L. C. Export . .	8	---- ---	1843 318				
	Std., 4.12" Bore	8	---- ---	---- ---	2240 333			
	.005 O/S., From 4.12" Bore	8	---- ---	---- ---	2240 334			
	.020 O/S., From 4.12" Bore	8	---- ---	---- ---	2240 335			
	.040 O/S., From 4.12" Bore	8	---- ---	---- ---	2240 336			
	Std., 4.25" Bore, Premium Fuel.	8	---- ---	---- ---	---- ---	1879 333		
	.020 O/S., From 4.25" Bore, Premium Fuel .	8	---- ---	---- ---	---- ---	1879 335		
	.040 O/S., From 4.25" Bore, Premium Fuel .	8	---- ---	---- ---	---- ---	1879 336		
	Std., 4.25" Bore, Std. Fuel	8	---- ---	---- ---	---- ---	2525 433		
	.005 O/S., From 4.25" Bore, Std. Fuel	8	---- ---	---- ---	---- ---	2525 434		
	.020 O/S., From 4.25" Bore, Std. Fuel	8	---- ---	---- ---	---- ---	2525 435		
	.040 O/S., From 4.25" Bore, Std. Fuel	8	---- ---	---- ---	---- ---	2525 436		
	Std., 4.25" Bore, L. C. Export.	8	---- ---	---- ---	---- ---	1879 648		
	.005 O/S., From 4.25" Bore, L. C. Export . .	8	---- ---	---- ---	---- ---	1879 649		
	.020 O/S., From 4.25" Bore, L. C. Export . .	8	---- ---	---- ---	---- ---	1879 650		
	Std., 4.18" Bore	8	---- ---	---- ---	---- ---	---- ---	1879 337	
	.020 O/S., From 4.18" Bore	8	---- ---	---- ---	---- ---	---- ---	1879 339	
	.040 O/S., From 4.18" Bore	8	---- ---	---- ---	---- ---	---- ---	1879 340	
	Std., 4.18" Bore, L. C. Export	8	---- ---	---- ---	---- ---	---- ---	1879 638	
	.005 O/S., From 4.18" Bore, L. C. Export . .	8	---- ---	---- ---	---- ---	---- ---	1879 639	
	.020 O/S., From 4.18" Bore, L. C. Export . .	8	---- ---	---- ---	---- ---	---- ---	1879 640	
	Std., 4.25" Bore, w/10.3 to 1 Compression Ratio, 426 Std.	8	---- ---	---- ---	---- ---	---- ---	---- ---	2525 008
	.005 O/S., From 4.25" Bore, w/10.3 to 1 Compression Ratio, 426 Std.	8	---- ---	---- ---	---- ---	---- ---	---- ---	2525 009

TYPE LETTERS Indicate: V - Valiant, L - Dart, R - Belvedere, W - Coronet, P - Plymouth, D - Dodge, C - Chrysler, Y - Imperial

★Indicates use as required. Numerals in parentheses ( ) refer to notes. Printed in U.S.A.

⊟Indicates parts not listed in any previous parts book. Prices and specifications subject to change without notice.

* Indicates change or addition.

MyMopar.com

CODE	PART NAME AND DESCRIPTION	PER CAR	CUBIC INCH DISPLACEMENT 273	318	361	383	413	426
	EIGHT CYLINDER ENGINES							
9-34-0	**PISTON, W/PIN - Cont'd**							
9-34-5	PISTON - Cont'd							
	.020 O/S., From 4.25" Bore, w/10.3 to 1 Compression Ratio, 426 Std.	8	---- ---	---- ---	---- ---	---- ---	---- ---	2525 010
	.040 O/S., From 4.25" Bore, w/10.3 to 1 Compression Ratio, 426 Std.	8	---- ---	---- ---	---- ---	---- ---	---- ---	2525 011
	Std., 4.25" Bore, Nos. 1,3,5 and 7, w/12.5 to 1 Compression Ratio, 426 Hemispherical . .	4	---- ---	---- ---	---- ---	---- ---	---- ---	⊟2585 577
	Std., 4.25" Bore, Nos. 2,4,6 and 8, w/12.5 to 1 Compression Ratio, 426 Hemispherical . .	4	---- ---	---- ---	---- ---	---- ---	---- ---	⊟2585 578
	.005 O/S., From 4.25" Bore, Nos. 1,3,5 and 7, w/12.5 to 1 Compression Ratio, 426 Hemispherical	4	---- ---	---- ---	---- ---	---- ---	---- ---	⊟2585 579
	.005 O/S., From 4.25" Bore, Nos. 2,4,6 and 8, w/12.5 to 1 Compression Ratio, 426 Hemispherical	4	---- ---	---- ---	---- ---	---- ---	---- ---	⊟2585 580
9-35-0	**PISTON RING SETS**							
9-35-1	SET, Piston Ring, Std. to .009 O/S., From 3.62" Bore	1	2525 407					
	.020 to .029 O/S., From 3.62" Bore.	1	2525 408					
	.040 to .049 O/S., From 3.62" Bore.	1	2525 409					
	Std. to .009 O/S., From 3.91" Bore.	1	---- ---	2421 703				
	.020 to .029 O/S., From 3.91" Bore.	1	---- ---	2421 704				
	.040 to .049 O/S., From 3.91" Bore.	1	---- ---	2421 705				
	Std. to .009 O/S., From 4.12" Bore.	1	---- ---	---- ---	1843 330			
	.020 to .029 O/S., From 4.12" Bore.	1	---- ---	---- ---	1843 331			
	.040 to .049 O/S., From 4.12" Bore.	1	---- ---	---- ---	1843 332			
	Std. to .009 O/S., From 4.25" Bore.	1	---- ---	---- ---	---- ---	1881 693		
	.020 to .029 O/S., From 4.25" Bore.	1	---- ---	---- ---	---- ---	1881 694		
	.040 to .049 O/S., From 4.25" Bore.	1	---- ---	---- ---	---- ---	1881 695		

TYPE LETTERS Indicate: V - Valiant, L - Dart, R - Belvedere, W - Coronet, P - Plymouth, D - Dodge, C - Chrysler, Y - Imperial

★Indicates use as required. Numerals in parentheses ( ) refer to notes. Printed in U.S.A.

⊟Indicates parts not listed in any previous parts book. Prices and specifications subject to change without notice.

MyMopar.com

EIGHT CYLINDER ENGINES

9-35-0 PISTON RING SETS - Cont'd

CODE	PART NAME AND DESCRIPTION	PER CAR	CUBIC INCH DISPLACEMENT 273	318	361	383	413	426
9-35-1	SETS - Cont'd							
	Std. to .009 O/S., From 4.18" Bore.	1	---- ---	---- ---	---- ---	---- ---	1881 699	
	.020 to .029 O/S., From 4.18" Bore.	1	---- ---	---- ---	---- ---	---- ---	1881 700	
	.040 to .049 O/S., From 4.18" Bore.	1	---- ---	---- ---	---- ---	---- ---	1881 701	
	Std. to .009 O/S., From 4.25" Bore, 426 Std. .	1	---- ---	---- ---	---- ---	---- ---	---- ---	1881 693
	.020 to .029 O/S., From 4.25" Bore, 426 Std. .	1	---- ---	---- ---	---- ---	---- ---	---- ---	1881 694
	.040 to .049 O/S., From 4.25" Bore, 426 Std. .	1	---- ---	---- ---	---- ---	---- ---	---- ---	1881 695
	Std. to .009 O/S., From 4.25" Bore, w/12.5 to 1 Compression Ratio, 426 Hemispherical	1	---- ---	---- ---	---- ---	---- ---	---- ---	2525 497

9-36-0 PISTON PIN

CODE	PART NAME AND DESCRIPTION	PER CAR	273	318	361	383	413	426
9-36-5	PIN, Std., w/Two Barrel Carb.	8	2463 268					
	.003 O/S., w/Two Barrel Carb.	8	2463 269					
	.008 O/S., w/Two Barrel Carb.	8	2463 270					
	Std., w/Four Barrel Carb.	8	2465 700					
	.003 O/S., w/Four Barrel Carb.	8	2465 701					
	.008 O/S., w/Four Barrel Carb.	8	2465 702					
	Std.	8	---- ---	1618 738				
	.003 O/S.	8	---- ---	1618 739				
	.008 O/S.	8	---- ---	1618 740				
9-36-7	RING, Retaining	16	1324 470	1324 470				
	426 Hemispherical . . .	16	---- ---	---- ---	---- ---	---- ---	---- ---	6025 031

9-39-0 VALVE

CODE	PART NAME AND DESCRIPTION	PER CAR	273	318	361	383	413	426
9-39-1	GASKET PACKAGE, Valve Grinding	1	2585 205	2585 203	2585 207	2585 207	2585 209	
	426 Std.	1	---- ---	---- ---	---- ---	---- ---	---- ---	2585 209
	426 Hemispherical . . .	1	---- ---	---- ---	---- ---	---- ---	---- ---	⊟2585 561
9-39-5	VALVE, Intake, Std. . .	8	2465 335	1945 318	2206 103	2206 103	2206 103	
	.005 O/S.	8	2465 336	1945 319	2206 104	2206 104	2206 104	
	.015 O/S.	8	2465 337	1945 320	2206 105	2206 105	2206 105	
	.030 O/S.	8	2465 338	1945 321	2206 106	2206 106	2206 106	
	Std., 426 Std.	8	---- ---	---- ---	---- ---	---- ---	---- ---	2206 103
	.005 O/S., 426 Std. . .	8	---- ---	---- ---	---- ---	---- ---	---- ---	2206 104
	.015 O/S., 426 Std. . .	8	---- ---	---- ---	---- ---	---- ---	---- ---	2206 105
	.030 O/S., 426 Std. . .	8	---- ---	---- ---	---- ---	---- ---	---- ---	2206 106

TYPE LETTERS Indicate: V - Valiant, L - Dart, R - Belvedere, W - Coronet, P - Plymouth, D - Dodge, C - Chrysler, Y - Imperial

★Indicates use as required. Numerals in parentheses ( ) refer to notes. Printed in U.S.A.

⊟Indicates parts not listed in any previous parts book. Prices and specifications subject to change without notice.

* Indicates change or addition. May 1965, Supersedes Nov. 30, 1964.

MyMopar.com

EIGHT CYLINDER ENGINES

9-39-0 VALVE - Cont'd

CODE	PART NAME AND DESCRIPTION	PER CAR	CUBIC INCH DISPLACEMENT 273	318	361	383	413	426
9-39-5	VALVE - Cont'd							
	Std., 426 Hemispherical	8	---- ---	---- ---	---- ---	---- ---	---- ---	⊟2531 115
	.005 O/S., 426 Hemispherical	8	---- ---	---- ---	--------	---- ---	---- ---	⊟2531 127
	.015 O/S., 426 Hemispherical	8	---- ---	---- ---	---- ---	---- ---	---- ---	⊟2531 128
	.030 O/S., 426 Hemispherical	8	---- ---	---- ---	---- ---	---- ---	---- ---	⊟2531 129
9-39-6	VALVE, Exhaust, Std. .	8	2465 339	1852 248	1737 698	1737 698	1737 698	
	.005 O/S.	8	2465 340	1852 251	1739 612	1739 612	1739 612	
	.015 O/S.	8	2465 341	1852 252	1739 613	1739 613	1739 613	
	.030 O/S.	8	2465 342	1852 253	1739 614	1739 614	1739 614	
	Std., 426 Std.	8	---- ---	---- ---	---- ---	---- ---	---- ---	1737 698
	.005 O/S., 426 Std. . .	8	---- ---	---- ---	---- ---	---- ---	---- ---	1739 612
	.015 O/S., 426 Std. . .	8	---- ---	---- ---	---- ---	---- ---	---- ---	1739 613
	.030 O/S., 426 Std. . .	8	---- ---	---- ---	---- ---	---- ---	---- ---	1739 614
	Std., 426 Hemispherical	8	---- ---	---- ---	---- ---	---- ---	---- ---	⊟2531 116
	.005 O/S., 426 Hemispherical	8	---- ---	---- ---	---- ---	---- ---	---- ---	⊟2536 797
	.015 O/S., 426 Hemispherical	8	---- ---	---- ---	---- ---	---- ---	---- ---	⊟2536 798
	.030 O/S., 426 Hemispherical	8	---- ---	---- ---	---- ---	---- ---	---- ---	⊟2536 799
9-39-9	SEAT, Exhaust Valve, 426 Hemispherical . .	8	---- ---	---- ---	---- ---	---- ---	---- ---	⊟2531 112
	.010 O/S	8	---- ---	---- ---	---- ---	---- ---	---- ---	⊟2658 252
9-39-10	GUIDE, Exhaust Valve, 426 Hemispherical . .	8	---- ---	---- ---	---- ---	---- ---	---- ---	⊟2531 114
	Intake Valve, 426 Hemispherical	8	---- ---	---- ---	---- ---	---- ---	---- ---	⊟2531 113
9-39-11	OIL SEAL PACKAGE, Intake Valve Stem, 426 Hemispherical	8	---- ---	---- ---	---- ---	---- ---	---- ---	*2525 449
9-39-12	SEAT, Intake Valve, 426 Hemispherical . .	8	---- ---	---- ---	---- ---	---- ---	---- ---	⊟2531 111
	.010 O/S	8	---- ---	---- ---	---- ---	---- ---	---- ---	⊟2658 251
9-39-14	SHIELD, Valve Stem Oil .	16	2205 958	---- ---	2121 686	2121 686	2121 686	
	Intake Valve Stem Oil .	8	---- ---	2205 958				
	Exhaust Valve Stem Oil	8	---- ---	2205 959				
	426 Std.	16	---- ---	---- ---	---- ---	---- ---	---- ---	2121 686
9-39-15	SPRING	16	1739 534	1739 534				
	w/o Damper	16	---- ---	---- ---	1944 854	1944 854	1944 854	
	w/DAMPER, Intake Valve	8	---- ---	---- ---	---- ---	1855 042	1855 042	
	w/DAMPER, Exhaust Valve	8	---- ---	---- ---	---- ---	1944 854	1944 854	
	w/DAMPER, Intake Valve, 426 Std. . . .	8	---- ---	---- ---	---- ---	---- ---	---- ---	1855 042
	w/DAMPER, Exhaust Valve, 426 Std.	8	---- ---	---- ---	---- ---	---- ---	---- ---	1944 854
	w/DAMPER, 426 Hemispherical	16	---- ---	---- ---	---- ---	---- ---	---- ---	*2532 258

TYPE LETTERS Indicate: V - Valiant, L - Dart, R - Belvedere, W - Coronet, P - Plymouth, D - Dodge, C - Chrysler, Y - Imperial

★Indicates use as required. Numerals in parentheses ( ) refer to notes. Printed in U.S.A.

⊟Indicates parts not listed in any previous parts book. Prices and specifications subject to change without notice.

May 1965, Supersedes Nov. 30, 1964. * Indicates change or addition.

MyMopar.com

EIGHT CYLINDER ENGINES

CODE	PART NAME AND DESCRIPTION	PER CAR	CUBIC INCH DISPLACEMENT 273	318	361	383	413	426
9-39-0	**VALVE - Cont'd**							
9-39-16	RETAINER, Spring	16	⊟2402 045	⊟2402 045	⊟2402 045	⊟2402 045	⊟2402 045	
	426 Std.	16	---- ---	---- ---	---- ---	---- ---	---- ---	⊟2402 045
	426 Hemispherical . . .	16	---- ---	---- ---	---- ---	---- ---	---- ---	2468 109
9-39-17	LOCK, Intake Valve Spring Retainer	16	381 875	381 875	381 875	381 875	381 875	
	426 Std.	16	---- ---	---- ---	---- ---	---- ---	---- ---	381 875
	LOCK, Exhaust Valve Spring Retainer	16	1614 666	1614 666	1614 666	1614 666	1614 666	
	426 Std.	16	---- ---	---- ---	---- ---	---- ---	---- ---	1614 666
	LOCK, Valve Spring Retainer, 426 Hemispherical	32	---- ---	---- ---	---- ---	---- ---	---- ---	2264 658
9-39-21	SPACER, Valve Spring . .	★	1639 947	1639 947	1859 144	1859 144	1859 144	
	426 Std.	★	---- ---	---- ---	---- ---	---- ---	---- ---	*1859 144
	426 Hemispherical . . .	16	---- ---	---- ---	---- ---	---- ---	---- ---	⊟2531 117
9-41-0	**VALVE TAPPET**							
9-41-1	SILENCER PACKAGE, Tappet Chamber	1	---- ---	---- ---	1879 747	1879 747	1879 747	
	426 Std.	1	---- ---	---- ---	---- ---	---- ---	---- ---	1879 747
9-41-4	TAPPET, Std.	16	2203 250	2203 250	2084 029	2084 029	2084 029	
	.001 O/S.	16	2203 252	2203 252	2084 030	2084 030	2084 030	
	.008 O/S.	16	2269 024	2269 024	2084 031	2084 031	2084 031	
	.030 O/S.	16	1739 359	1739 359	2084 032	2084 032	2084 032	
	Std., 426 Std.	16	---- ---	---- ---	---- ---	---- ---	---- ---	2084 029
	.001 O/S., 426 Std. . .	16	---- ---	---- ---	---- ---	---- ---	---- ---	2084 030
	.008 O/S., 426 Std. . .	16	---- ---	---- ---	---- ---	---- ---	---- ---	2084 031
	.030 O/S., 426 Std. . .	16	---- ---	---- ---	---- ---	---- ---	---- ---	2084 032
	Std., 426 Hemispherical	16	---- ---	---- ---	---- ---	---- ---	---- ---	2402 288
	.001 O/S., 426 Hemispherical	16	---- ---	---- ---	---- ---	---- ---	---- ---	2402 289
	.008 O/S., 426 Hemispherical	16	---- ---	---- ---	---- ---	---- ---	---- ---	2402 290
	.030 O/S., 426 Hemispherical	16	---- ---	---- ---	---- ---	---- ---	---- ---	2402 719
9-42-0	**VALVE PUSH ROD**							
9-42-1	ROD	16	2465 343	1637 721	1737 757	1737 757		
	426 Std.	16	---- ---	---- ---	---- ---	---- ---	1851 669	1851 669
	Intake Valve, 426 Hemispherical	8	---- ---	---- ---	---- ---	---- ---	---- ---	2468 092
	Exhaust Valve, 426 Hemispherical	8	---- ---	---- ---	---- ---	---- ---	---- ---	2468 094
9-43-0	**VALVE ROCKER**							
9-43-1	ROCKER	16	2465 332					
	Intake Valve	8	---- ---	1859 919				
	Exhaust Valve	8	---- ---	1854 953				
	Right	8	---- ---	---- ---	1737 646	1737 646	1737 646	
	Left	8	---- ---	---- ---	1737 645	1737 645	1737 645	
	Right, 426 Std.	8	---- ---	---- ---	---- ---	---- ---	---- ---	1737 646
	Left, 426 Std.	8	---- ---	---- ---	---- ---	---- ---	---- ---	1737 645

TYPE LETTERS Indicate: V - Valiant, L - Dart, R - Belvedere, W - Coronet, P - Plymouth, D - Dodge, C - Chrysler, Y - Imperial

★Indicates use as required. Numerals in parentheses ( ) refer to notes. Printed in U.S.A.

⊟Indicates parts not listed in any previous parts book. Prices and specifications subject to change without notice.

* Indicates change or addition.

May 1965, Supersedes Nov. 30, 1964.

MyMopar.com

CODE	PART NAME AND DESCRIPTION	PER CAR	CUBIC INCH DISPLACEMENT 273	318	361	383	413	426
	EIGHT CYLINDER ENGINES							
9-43-0	**VALVE ROCKER - Cont'd**							
9-43-1	ROCKER - Cont'd							
	Intake Valve, 426 Hemispherical	8	---- ---	---- ---	---- ---	---- ---	---- ---	2468 173
	Exhaust Valve, Hemispherical	8	---- ---	---- ---	---- ---	---- ---	---- ---	2468 174
9-43-2	BUSHING, Intake Valve Rocker, 426 Hemispherical	8	---- ---	---- ---	---- ---	---- ---	---- ---	2468 898
	BUSHING, Exhaust Valve Rocker, 426 Hemispherical	8	---- ---	---- ---	---- ---	---- ---	---- ---	2468 132
9-43-3	SCREW, Adjusting	16	1855 238	1855 238				
	426 Hemispherical	16	---- ---	---- ---	---- ---	---- ---	---- ---	2402 525
	NUT, 426 Hemispherical	16	---- ---	---- ---	---- ---	---- ---	---- ---	*6023 587
9-43-5	SPACER, Valve Rocker	8	2463 324	---- ---	1737 756	1737 756	1737 756	
	426 Std.	8	---- ---	---- ---	---- ---	---- ---	---- ---	1737 756
9-43-9	SHAFT, Valve Rocker	2	2463 321	1618 671	2465 850	2465 850	2465 850	
	426 Std.	2	---- ---	---- ---	---- ---	---- ---	---- ---	2465 850
	Intake Valve Rocker, 426 Hemispherical	2	---- ---	---- ---	---- ---	---- ---	---- ---	2468 124
	Exhaust Valve Rocker, 426 Hemispherical	2	---- ---	---- ---	---- ---	---- ---	---- ---	2468 126
9-43-10	BRACKET, Valve Rocker Shaft Support, 426 Hemispherical	4	---- ---	---- ---	---- ---	---- ---	---- ---	2468 089
	Intermediate, 426 Hemispherical	4	---- ---	---- ---	---- ---	---- ---	---- ---	2468 088
	Right Front and Left Rear Off Set, 426 Hemispherical	2	---- ---	---- ---	---- ---	---- ---	---- ---	2468 091
9-43-11	RETAINER, Shaft, End and Center	6	2463 322	---- ---	2463 282	2463 282	2463 282	
	Intermediate	4	2463 323	---- ---	2463 283	2463 283	2463 283	
	End and Center, 426 Std.	6	---- ---	---- ---	---- ---	---- ---	---- ---	2463 282
	Intermediate, 426 Std.	4	---- ---	---- ---	---- ---	---- ---	---- ---	2463 283
9-43-14	SPRING, Shaft	8	---- ---	1632 106				
	426 Hemispherical (8 coils 2.60 length)	14	---- ---	---- ---	---- ---	---- ---	---- ---	*2468 128
	426 Hemispherical (4 coils 1.54 length)	2	---- ---	---- ---	---- ---	---- ---	---- ---	*1632 106
9-43-19	PLUG, Shaft	4	1324 268	1858 802	1324 268	1324 268	1324 268	
	426 Std.	4	---- ---	---- ---	---- ---	---- ---	---- ---	1324 268
9-43-26	PIN, Shaft Bracket Locating	2	---- ---	1670 476				
9-45-0	**FLYWHEEL**							
9-45-1	FLYWHEEL, w/Ring GEAR	1	2463 256	2264 597	2264 597	2264 597	2264 597	
	426 Std.	1	---- ---	---- ---	---- ---	---- ---	---- ---	2264 597
	426 Hemispherical	1	---- ---	---- ---	---- ---	---- ---	---- ---	2536 400
	BOLT, 426 Std.	6	---- ---	---- ---	*6023 145	*6023 145	*6023 145	*6023 145
	SCREW, 426 Hemispherical	8	---- ---	---- ---	---- ---	---- ---	---- ---	*9411 259

TYPE LETTERS Indicate: V - Valiant, L - Dart, R - Belvedere, W - Coronet, P - Plymouth, D - Dodge, C - Chrysler, Y - Imperial

★Indicates use as required. Numerals in parentheses ( ) refer to notes. Printed in U.S.A.

⊟Indicates parts not listed in any previous parts book. Prices and specifications subject to change without notice.

May 1965, Supersedes Nov. 30, 1964. * Indicates change or addition.

MyMopar.com

EIGHT CYLINDER ENGINES

CODE	PART NAME AND DESCRIPTION	PER CAR	CUBIC INCH DISPLACEMENT 273	318	361	383	413	426
9-45-0	**FLYWHEEL - Cont'd**							
9-45-2	GEAR, Flywheel Ring . .	1	1941 648	1941 648	1941 648	1941 648	1941 648	1941 648
	GEAR, Torque Converter Ring, w/10.75 dia. Torque Converter . . .	1	2121 196					
	w/11.75 dia. Torque Converter	1	1941 648	1941 648	1941 648	1941 648	1941 648	1941 648
	w/10.75" dia. Torque Converter, 426 Hemispherical	1	---- ---	---- ---	---- ---	---- ---	---- ---	1941 648
9-46-0	**TORQUE CONVERTER**							
9-46-4	TORQUE CONVERTER, 10.75 dia., w/A904A Trans.	1	2204 403					
	11.75" dia., w/A727 Trans.	1	2125 090	2125 090	2125 090	2125 090	2125 090	
	426 Std.	1	---- ---	---- ---	---- ---	---- ---	---- ---	2125 090
	426 Hemispherical . . .	1	---- ---	---- ---	---- ---	---- ---	---- ---	2466 323
	PLUG	1	* 444 614	* 444 614	* 444 614	* 444 614	* 444 614	* 444 614
9-46-8	PLATE, Torque Converter Drive, w/10.75" dia. Torque Converter	1	2400 885					
	w/11.75" dia. Torque Converter	1	2204 768	2204 768	2204 768	2204 768	2204 768	
	426 Std.	1	---- ---	---- ---	---- ---	---- ---	---- ---	2204 768
	426 Hemispherical . . .	1	---- ---	---- ---	---- ---	---- ---	---- ---	2466 715
9-46-21	SCREW, Drive Plate to Torque Converter . . .	4	1949 765	1949 765	1949 765	1949 765	1949 765	
	426 Std.	4	---- ---	---- ---	---- ---	---- ---	---- ---	1949 765
	426 Hemispherical . . .	4	---- ---	---- ---	---- ---	---- ---	---- ---	6024 318
	SCREW, Drive Plate to Crankshaft	6	1949 424	1949 424	1949 424	1949 424	1949 424	
	426 Std.	6	---- ---	---- ---	---- ---	---- ---	---- ---	1949 424
	426 Hemispherical . . .	8	---- ---	---- ---	---- ---	---- ---	---- ---	*6025 528
9-46-27	TUBE, Transmission Oil Cooler Inlet and Outlet	★	1843 253	1843 253	1843 253	1843 253	1843 253	1843 253
9-46-31	COOLER, Radiator Core Oil, 12" length	1	1903 792	1903 792	1903 792	1903 792	1903 792	1903 792
	14" length	1	---- ---	1903 791	1903 791	1903 791	1903 791	1903 791
9-46-33	BRACKET, Transmission Oil Cooler Tube, V2, L2	1	1949 176					
	w/A904A Trans., R2, W2	1	2464 999					
	w/A727 Trans., R2, W2	1	1949 176					
		1	---- ---	1949 176	1949 176	1949 176	1949 176	
	426 Std.	1	---- ---	---- ---	---- ---	---- ---	---- ---	1949 176
	426 Hemispherical . . .	1	---- ---	---- ---	---- ---	---- ---	---- ---	2532 235
9-46-40	ELBOW, Transmission Oil Cooler Tube Transmission Inlet . .	1	2205 237	2205 237	2205 237	2205 237	2205 237	2205 237

TYPE LETTERS Indicate: V - Valiant, L - Dart, R - Belvedere, W - Coronet, P - Plymouth, D - Dodge, C - Chrysler, Y - Imperial

★Indicates use as required. Numerals in parentheses ( ) refer to notes. Printed In U.S.A.

⊟Indicates parts not listed in any previous parts book. Prices and specifications subject to change without notice.

* Indicates change or addition. May 1965, Supersedes Nov. 30, 1964.

MyMopar.com

EIGHT CYLINDER ENGINES

9-46-0 TORQUE CONVERTER - Cont'd

CODE	PART NAME AND DESCRIPTION	PER CAR	CUBIC INCH DISPLACEMENT 273	318	361	383	413	426
9-46-42	SLEEVE, Transmission Oil Cooler Tube Radiator End	2	---- ---	2466 817	2466 817	2466 817	2466 817	2466 817
9-46-43	NUT, Transmission Oil Cooler Tube Transmission End, Radiator End	★	1941 667	1941 667	1941 667	1941 667	1941 667	1941 667
9-46-94	DOWEL, Cylinder Block to Clutch Housing or Torque Converter Transmission Housing, Eccentric .007 Over Center	2	1736 347	1736 347	1736 347	1736 347	1736 347	1736 347
	Eccentric .014 Over Center	2	1736 348	1736 348	1736 348	1736 348	1736 348	1736 348
	Eccentric .021 Over Center	2	1736 353	1736 353	1736 353	1736 353	1736 353	1736 353
9-46-130	SEAL, Transmission Torque Converter Impeller Hub, w/A904A Trans., V2, L2, R2, W2	1	2124 705					
	w/A727 Trans., R2, W2	1	1942 020	1942 020	1942 020	1942 020	1942 020	1942 020
9-46-228	ROLLER, Overrunning Clutch	8	670 776	670 776	670 776	670 776	670 776	670 776
9-46-229	SPRING, Overrunning Clutch Roller	8	1942 187	1942 187	1942 187	1942 187	1942 187	1942 187

9-48-0 MANIFOLD

CODE	PART NAME AND DESCRIPTION	PER CAR	273	318	361	383	413	426
9-48-6	MANIFOLD, Exhaust, Right	1	2465 766					
	Left, V2, L2	1	2465 848					
	Left, R2, W2	1	2465 718					
	Right	1	---- ---	2465 879				
	Left	1	---- ---	2268 127				
	Right, R2, W2	1	---- ---	---- ---	2205 905	2205 905		
	Left, R2, W2	1	---- ---	---- ---	2203 091	2203 091		
	Right, P2, D2, C1, C2, C3	1	---- ---	---- ---	---- ---	1854 990	1854 990	
	Left, P2, D2, C1, C2, C3 .	1	---- ---	---- ---	---- ---	2463 106	*1739 600	
	Right, W2, 426 Std. . .	1	---- ---	---- ---	---- ---	---- ---	---- ---	2205 905
	Left, W2, 426 Std. . . .	1	---- ---	---- ---	---- ---	---- ---	---- ---	2203 091
	Right, P2, D2, 426 Std. .	1	---- ---	---- ---	---- ---	---- ---	---- ---	1854 990
	Left, P2, D2, 426 Std. .	1	---- ---	---- ---	---- ---	---- ---	---- ---	2463 106
	Right, 426 Hemispherical	1	---- ---	---- ---	---- ---	---- ---	---- ---	⊟2532 236
	Left, 426 Hemispherical	1	---- ---	---- ---	---- ---	---- ---	---- ---	⊟2532 237
	STUD, Exhaust Manifold Flange	1	---- ---	*6024 380	---- ---	---- ---	---- ---	---- ---
9-48-7	MANIFOLD, Intake, w/Two Barrel Carburetor. . .	1	2463 253					

TYPE LETTERS Indicate: V - Valiant, L - Dart, R - Belvedere, W - Coronet, P - Plymouth, D - Dodge, C - Chrysler, Y - Imperial

★Indicates use as required. Numerals in parentheses ( ) refer to notes. Printed in U.S.A.

⊟Indicates parts not listed in any previous parts book. Prices and specifications subject to change without notice.

May 1965, Supersedes Nov. 30, 1964. * Indicates change or addition.

MyMopar.com

EIGHT CYLINDER ENGINES

9-48-0 MANIFOLD - Cont'd

CODE	PART NAME AND DESCRIPTION	PER CAR	CUBIC INCH DISPLACEMENT 273	318	361	383	413	426
9-48-7	MANIFOLD - Cont'd							
	w/Four Barrel Carburetor, V2, L2	1	2465 727					
		1	---- ---	2448 757				
		1	---- ---	---- ---	1859 299			
	w/Two Barrel Carburetor	1	---- ---	---- ---	---- ---	1859 299		
	w/Four Barrel Carburetor	1	---- ---	---- ---	---- ---	1859 300		
	w/Four Barrel Carburetor	1	---- ---	---- ---	---- ---	---- ---	1858 623	
	426 Std.	1	---- ---	---- ---	---- ---	---- ---	---- ---	1858 623
	426 Hemispherical . . .	1	---- ---	---- ---	---- ---	---- ---	---- ---	2468 418
	STUD, Intake Manifold Front Right and Rear Left Corners, 426 Hemispherical	2	---- ---	---- ---	---- ---	---- ---	---- ---	6026 001
	NUT, Intake Manifold Front Right and Rear Left Corners Stud, 426 Hemispherical	2	---- ---	---- ---	---- ---	---- ---	---- ---	6023 118
9-48-8	CONNECTOR, Intake Manifold Vacuum Control .	1	1858 955	1858 955	1858 955	1858 955	1858 955	
	426 Std.	1	---- ---	---- ---	---- ---	---- ---	---- ---	1858 955
	426 Hemispherical . . .	1	---- ---	---- ---	---- ---	---- ---	---- ---	1944 092
9-48-9	PLUG, Intake Manifold Core Hole, 426 Hemispherical	2	---- ---	---- ---	---- ---	---- ---	---- ---	2406 387
	Screw Hole 426 Hemispherical	8	---- ---	---- ---	---- ---	---- ---	---- ---	*1392 371
9-48-14	WASHER, Exhaust Manifold End Strut Nut	4	2121 223					
	WASHER, Exhaust Manifold Screw	4	2121 223					
9-48-27	REINFORCEMENT, Intake Manifold Gasket End . .	2	---- ---	---- ---	1859 332	1859 332	1851 665	
	426 Std.	2	---- ---	---- ---	---- ---	---- ---	---- ---	1851 665
9-48-38	SEAL, Intake Manifold Screw Hole, 426 Hemispherical	8	---- ---	---- ---	---- ---	---- ---	---- ---	2128 962
9-48-43	SCREW, Exhaust Mainfold, 5/16" x 2 1/8"	4	9421 360					
	STUD, Exhaust Manifold, Lower	8	---- ---	1613 782				
	STUD, Exhaust Manifold .	★	---- ---	---- ---	1613 782	1613 782	1613 782	
	426 Std.	12	---- ---	---- ---	---- ---	---- ---	---- ---	1613 782
	SCREW, Exhaust Manifold, 426 Hemispherical . .	10	---- ---	---- ---	---- ---	---- ---	---- ---	9420 742
9-48-44	NUT, Exhaust Manifold Stud, Long, 426 Std. .	★	---- ---	---- ---	2268 282	2268 282	---- ---	2268 282
	NUT, Exhaust Manifold Stud, 426 Std.	★	---- ---	---- ---	1737 695	1737 695	1737 695	1737 695
9-48-56	SHIELD, Intake Manifold Heat	1	2463 264	1619 627				

TYPE LETTERS Indicate: V - Valiant, L - Dart, R - Belvedere, W - Coronet, P - Plymouth, D - Dodge, C - Chrysler, Y - Imperial

★Indicates use as required. Numerals in parentheses ( ) refer to notes. Printed in U.S.A.

⊟Indicates parts not listed in any previous parts book. Prices and specifications subject to change without notice.

* Indicates change or addition. March 1966 Supersedes May 1965.

MyMopar.com

EIGHT CYLINDER ENGINES

9-48-0 MANIFOLD - Cont'd

CODE	PART NAME AND DESCRIPTION	PER CAR	CUBIC INCH DISPLACEMENT 273	318	361	383	413	426
9-48-56	SHIELD, Intake Manifold Heat	1	2463 264	1619 627				
	SHIELD, Exhaust Manifold, Right R2, W2, 426 Std.	1	---- ---	---- ---	2463 531	2463 531	---- ---	2463 531
9-48-155	BRACE, Exhaust Manifold, Left to Cylinder Block, V2, L2	1	2465 162					
	BRACE, Exhaust Manifold, left to Cylinder Head, V2, L2	1	2465 161					

9-50-0 MANIFOLD GASKETS

CODE	PART NAME AND DESCRIPTION	PER CAR	273	318	361	383	413	426
9-50-1	GASKET SET, Intake Manifold	1	2495 081					
	426 Hemispherical	1	---- ---	---- ---	---- ---	---- ---	---- ---	*2525 470
	GASKET SET, Manifold	1	---- ---	2525 090				
9-50-5	GASKET, Exhaust Manifold, Right, V2, L2	1	2465 842					
	GASKET, Exhaust Manifold, Left, w/Heat Shield, V2, L2	1	2465 845					
	GASKET, Exhaust Manifold, R2, W2	2	2465 842					
		2	---- ---	1670 508				
	426 Hemispherical	2	---- ---	---- ---	---- ---	---- ---	---- ---	2468 053
9-50-6	GASKET, Intake Manifold	1	---- ---	---- ---	1737 709	1737 709	1851 664	
	426 Std.	1	---- ---	---- ---	---- ---	---- ---	---- ---	1851 664

9-58-0 MANIFOLD HEAT CONTROL VALVE THERMOSTAT

CODE	PART NAME AND DESCRIPTION	PER CAR	273	318	361	383	413	426
9-58-1	HEAT CONTROL PACKAGE, Manifold	1	2525 034	2525 443				
	R2, W2	1	---- ---	---- ---	2279 887	2279 887		
	P2, D2, C1, C2, C3, Y1	1	---- ---	---- ---	---- ---	2525 081	2525 081	
	R2, W2, 426 Std.	1	---- ---	---- ---	---- ---	---- ---	---- ---	2279 887
	P2, D2, 426 Std.	1	---- ---	---- ---	---- ---	---- ---	---- ---	2525 081
9-58-5	THERMOSTAT	1	960 003	2465 884				
	R2, W2	1	---- ---	---- ---	2128 933	2128 933		
	P2, D2, C1, C2, C3, Y1	1	---- ---	---- ---	* 960 003	* 960 003	* 960 003	
	R2, W2, 426 Std.	1	---- ---	---- ---	---- ---	---- ---	---- ---	2128 933
9-58-12	COUNTERWEIGHT	1	2465 810	2465 883				
	R2, W2	1	---- ---	---- ---	1944 616	1944 616		
	P2, D2, C1, C2, C3, Y1	1	---- ---	---- ---	---- ---	2465 810	2465 810	
	R2, W2, 426 Std.	1	---- ---	---- ---	---- ---	---- ---	---- ---	1944 616
	P2, D2, 426 Std.	1	---- ---	---- ---	---- ---	---- ---	---- ---	2465 810
9-58-13	BOLT, Counterweight	1	1736 012	1736 012				
	BOLT, Shield	1	---- ---	---- ---	1736 012	1736 012	1736 012	
	426 Std.	1	---- ---	---- ---	---- ---	---- ---	---- ---	1736 012
9-58-14	LOCK, Exhaust Manifold Heat Control Counterweight	1	1409 594	---- ---	1409 594	1409 594	1409 594	
	426 Std.	1	---- ---	---- ---	---- ---	---- ---	---- ---	1409 594

TYPE LETTERS Indicate: V - Valiant, L - Dart, R - Belvedere, W - Coronet, P - Plymouth, D - Dodge, C - Chrysler, Y - Imperial

★Indicates use as required. Numerals in parentheses ( ) refer to notes. Printed in U.S.A.

⊟Indicates parts not listed in any previous parts book. Prices and specifications subject to change without notice.

May 1965. * Indicates change or addition.

MyMopar.com

EIGHT CYLINDER ENGINES

CODE	PART NAME AND DESCRIPTION	PER CAR	CUBIC INCH DISPLACEMENT 273	318	361	383	413	426
9-59-0	**MANIFOLD HEAT CONTROL VALVE**							
9-59-13	SPRING, Valve	1	1558 897	2532 087	1558 897	1558 897	1558 897	
	426 Std.	1	---- ---	---- ---	---- ---	---- ---	---- ---	1558 897
9-59-15	PIN, Valve	1	1639 597	2465 885	1639 597	1639 597	1639 597	
	426 Std.	1	---- ---	---- ---	---- ---	---- ---	---- ---	1639 597
9-62-0	**MANIFOLD HEAT CONTROL VALVE STOP**							
9-62-1	STOP, Valve	1	683 057	683 057	683 057	683 057	683 057	
	426 Std.	1	---- ---	---- ---	---- ---	---- ---	---- ---	683 057
9-64-0	**ENGINE FRONT SUPPORT**							
9-64-5	SUPPORT, Right, Y1	1	---- ---	---- ---	---- ---	---- ---	2128 572	
	Left, Y1	1	---- ---	---- ---	---- ---	---- ---	2128 571	
9-64-13	STUD, Engine Front Support to Frame, Y1.	2	---- ---	---- ---	---- ---	---- ---	2128 773	
9-64-18	WASHER, Engine Front Support to Frame Bolt or Stud, V2, L2	2	2128 774					
	Y1	2	---- ---	---- ---	---- ---	---- ---	2128 774	
9-64-22	SHIELD, Engine Front Support Heat, Right, Y1	1	---- ---	---- ---	---- ---	---- ---	2128 935	
	Left, Y1	1	---- ---	---- ---	---- ---	---- ---	2128 936	
9-64-24	BRACKET, Engine Front Support Insulator, Right, V2, L2	1	2465 378					
	Left, V2, L2	1	2465 379					
	BRACKET, Engine Front Support Insulator, R2, W2	2	2402 185	2402 185				
	Right, P2, D2	1	---- ---	*2402 185				
	Left, P2, D2	1	---- ---	*2465 867				
	Right, R2, W2	1	---- ---	---- ---	2268 220	2268 220		
	Left, R2, W2	1	---- ---	---- ---	2268 216	2268 216		
	Right, P2, D2, C1, C2, C3	1	---- ---	---- ---	---- ---	2268 220	2268 220	
	Left, P2, D2, C1, C2, C3	1	---- ---	---- ---	---- ---	2465 862	2465 862	
	Right, 426 Std.	1	---- ---	---- ---	---- ---	---- ---	---- ---	2268 220
	Left, R2, W2, 426 Std.	1	---- ---	---- ---	---- ---	---- ---	---- ---	2268 216
	Left, P2, D2, 426 Std.	1	---- ---	---- ---	---- ---	---- ---	---- ---	2465 862
	Right, R2, W2, 426 Hemispherical	1	---- ---	---- ---	---- ---	---- ---	---- ---	2468 151
	Left, R2, W2, 426, Hemispherical	1	---- ---	---- ---	---- ---	---- ---	---- ---	2468 150
	WASHER, Bracket to Cylinder Block Bolt	6	*6023 050	*6023 050	*6023 050	*6023 050	*6023 050	*6023 050
9-67-0	**ENGINE FRONT SUPPORT INSULATOR**							
9-67-4	INSULATOR, Engine Front Support, V2, L2	2	2465 508					
	Right, R2, W2	1	2402 182					
	Right, R2, W2, P2, D2	1	---- ---	*2402 182				

TYPE LETTERS Indicate: V - Valiant, L - Dart, R - Belvedere, W - Coronet, P - Plymouth, D - Dodge, C - Chrysler, Y - Imperial

★Indicates use as required. Numerals in parentheses ( ) refer to notes. Printed in U.S.A.

⊟Indicates parts not listed in any previous parts book. Prices and specifications subject to change without notice.

* Indicates change or addition. May 1965.

MyMopar.com

EIGHT CYLINDER ENGINES

9-67-0 ENGINE FRONT SUPPORT INSULATOR - Cont'd

CODE	PART NAME AND DESCRIPTION	PER CAR	CUBIC INCH DISPLACEMENT 273	318	361	383	413	426
9-67-4	INSULATOR - Cont'd							
	Left, R2, W2	1	2402 183	2402 183				
	Left, P2, D2	1	---- ---	*2465 861				
	Right, R2, W2	1	---- ---	---- ---	2402 182	2402 182		
	Left, R2, W2	1	---- ---	---- ---	2402 183	2402 183		
	Right, P2, D2, C1, C2, C3	1	---- ---	---- ---	---- ---	2402 182	2402 182	
	Left, P2, D2, C1, C2, C3	1	---- ---	---- ---	---- ---	2465 861	2465 861	
	Right, 426 Std.	1	---- ---	---- ---	---- ---	---- ---	---- ---	2402 182
	Left, R2, W2, 426 Std.. .	1	---- ---	---- ---	---- ---	---- ---	---- ---	2402 183
	Left, P2, D2, 426 Std. .	1	---- ---	---- ---	---- ---	---- ---	---- ---	2465 861
	Right, 426 Hemispherical	1	---- ---	---- ---	---- ---	---- ---	---- ---	2532 708
	Left, 426 Hemispherical	1	---- ---	---- ---	---- ---	---- ---	---- ---	2468 184

9-71-0 ENGINE REAR SUPPORT INSULATOR

CODE	PART NAME AND DESCRIPTION	PER CAR	273	318	361	383	413	426
9-71-5	INSULATOR, Engine Rear Support, V2, L2	1	*2405 872					
	w/Three Speed Manual and Auto. Trans., R2, W2	1	*2265 826	*2265 826	*2265 826	*2265 826	*2265 826	*2265 826
	w/Four Speed Manual Trans., R2, W2	1	---- ---	---- ---	---- ---	*2401 653	---- ---	*2401 653
	w/Three Speed Manual and Auto. Trans., P2, D2, C1, C2, C3	1	---- ---	*2460 886	*2460 886	*2460 886	*2460 886	*2460 886
	w/Four Speed Manual Trans., P2, D2, C1, C2	1	---- ---	---- ---	---- ---	*2460 888	*2460 888	*2460 888
	w/Auto. Trans., Y1 . .	1	---- ---	---- ---	---- ---	---- ---	*2206 979	
	SCREW, w/WASHER, except Floor Mounting Trans.	2	---- ---	*6025 419	*6025 419	*6025 419	*6025 419	
9-71-8	NUT, Engine Rear Support Insulator Stud	2	*2129 684	*2129 684	*2129 684	*2129 684	*2129 684	*2129 684
9-71-12	SPACER, Engine Rear Support Insulator, Y1 .	1	---- ---	---- ---	---- ---	---- ---	2533 185	
9-71-15	BUMPER, Engine Rear Support Insulator, V2, L2	1	2206 965					

NOTES

TYPE LETTERS Indicate: V - Valiant, L - Dart, R - Belvedere, W - Coronet, P - Plymouth, D - Dodge, C - Chrysler, Y - Imperial

★Indicates use as required. Numerals in parentheses ( ) refer to notes. Printed in U.S.A.

⊟Indicates parts not listed in any previous parts book. Prices and specifications subject to change without notice.

May 1965.

MyMopar.com

* Indicates change or addition.

GROUP 10 - ENGINE OILING

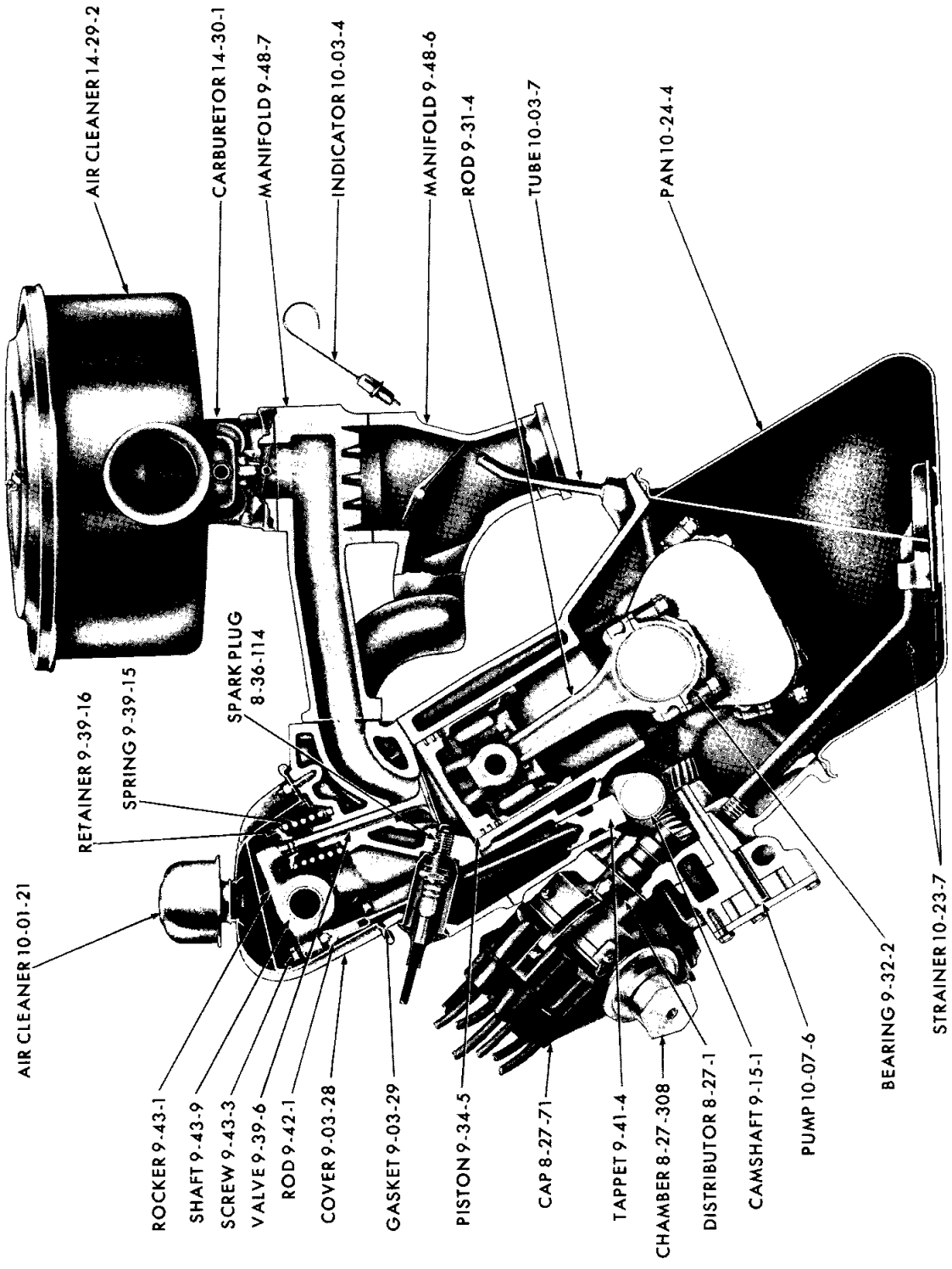

ENGINE OILING (6 CYLINDER) - 170 AND 225 CU. IN. DISPLACEMENT

MyMopar.com

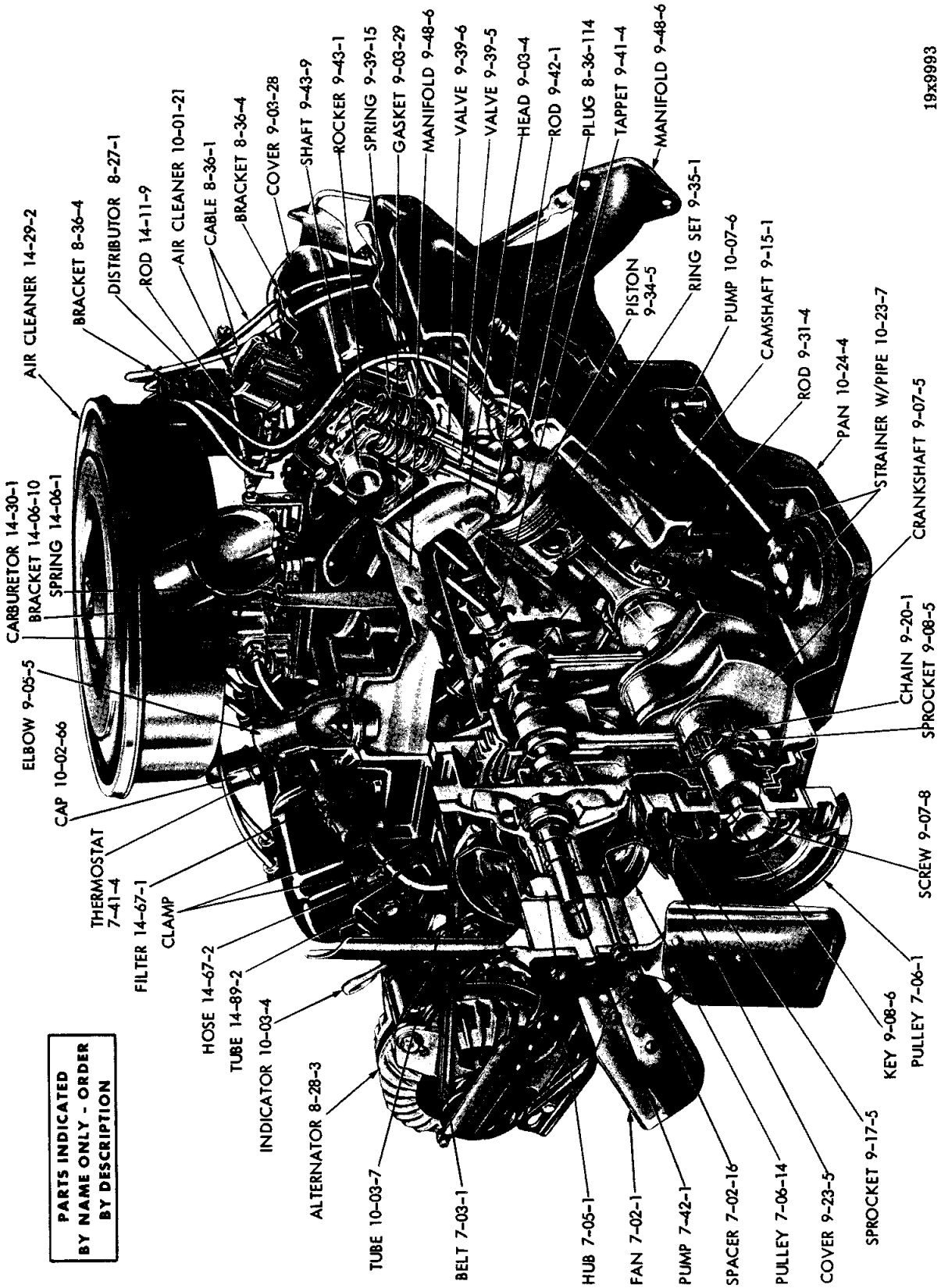

ENGINE OILING (V8 CYLINDER) - 273 CU. IN. DISPLACEMENT

MyMopar.com

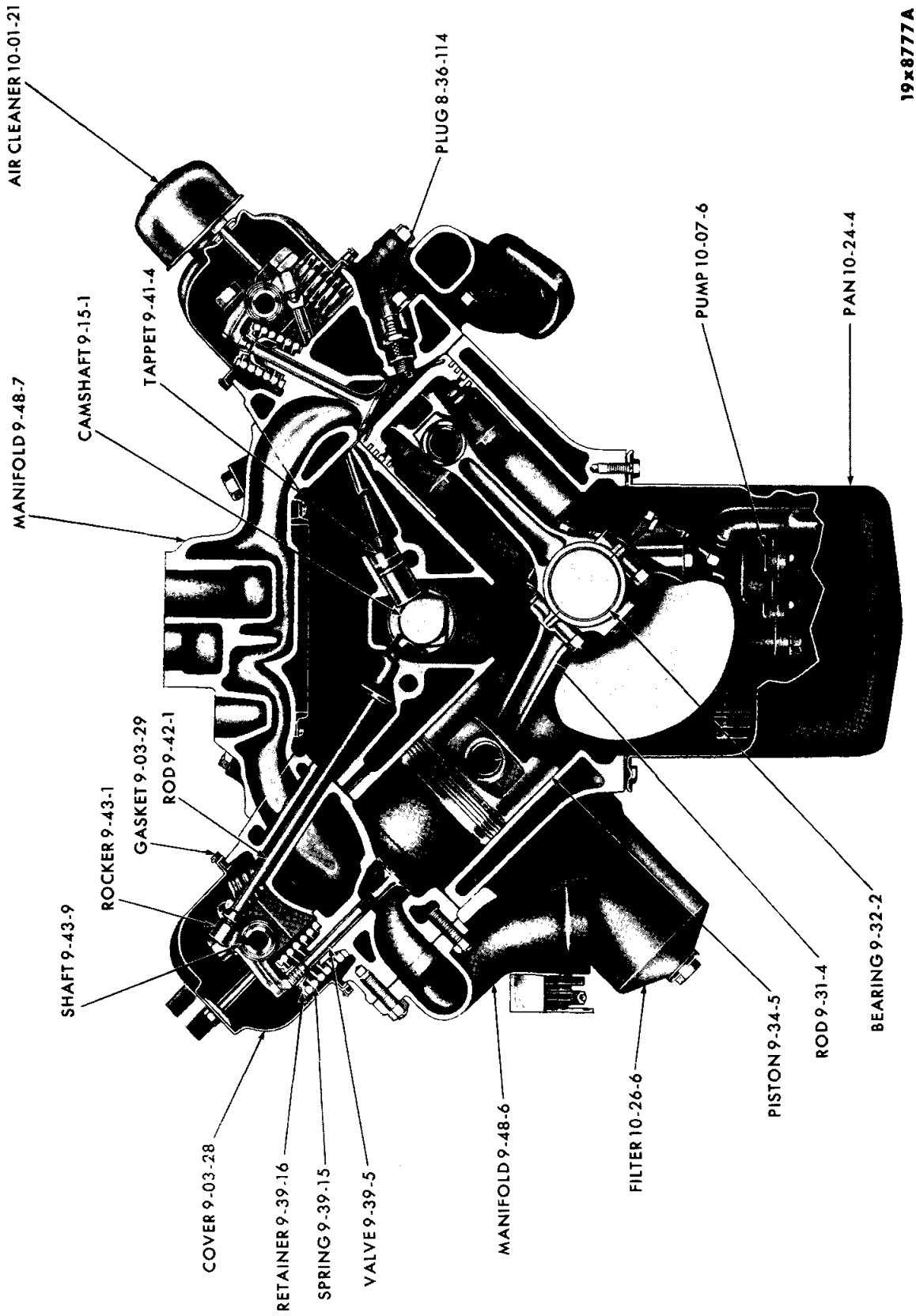

ENGINE OILING (V8 CYLINDER) - 318 CU. IN. DISPLACEMENT

MyMopar.com

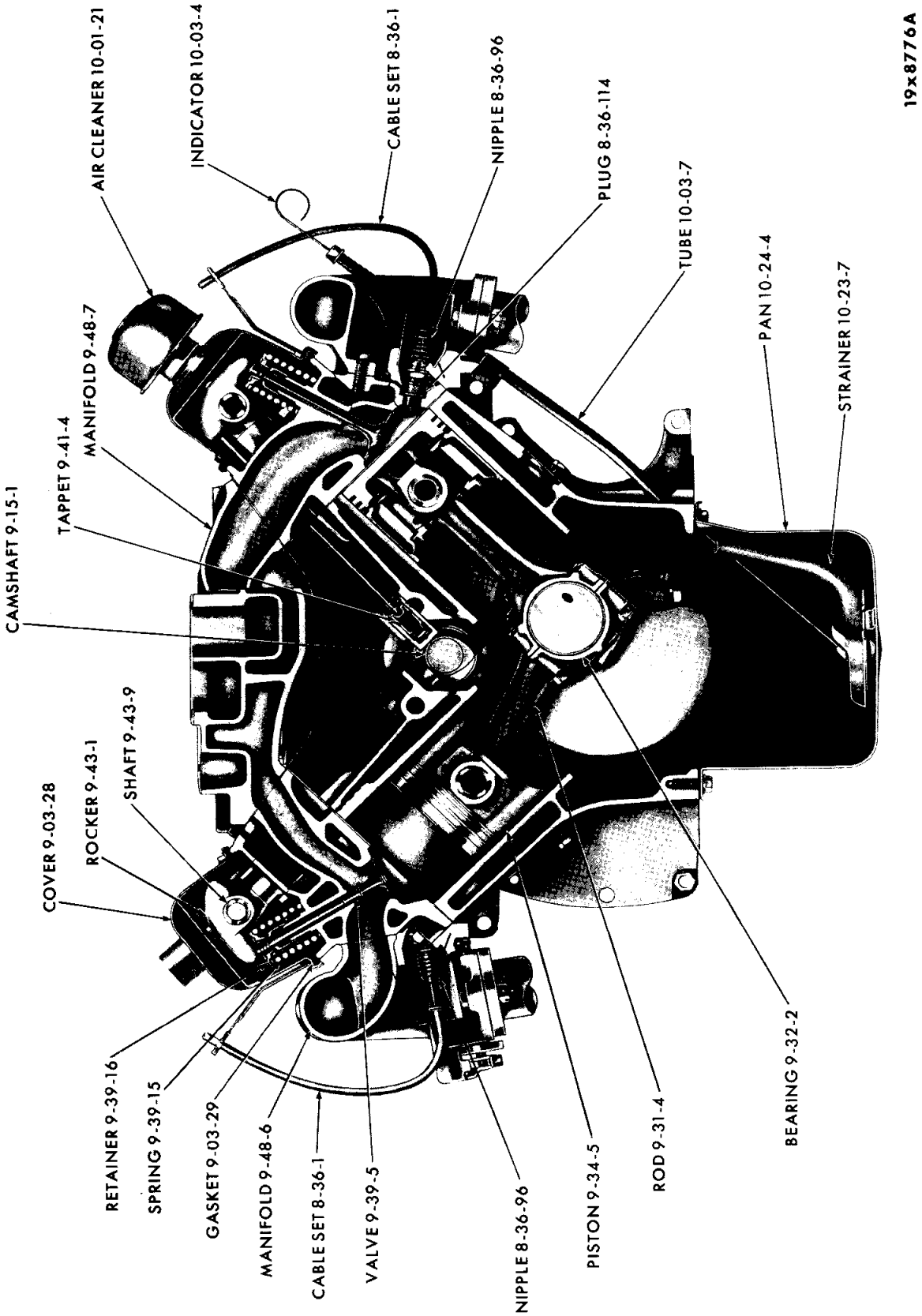

ENGINE OILING (V8 CYLINDER) - 361, 383 AND 413 CU. IN. DISPLACEMENT

MyMopar.com

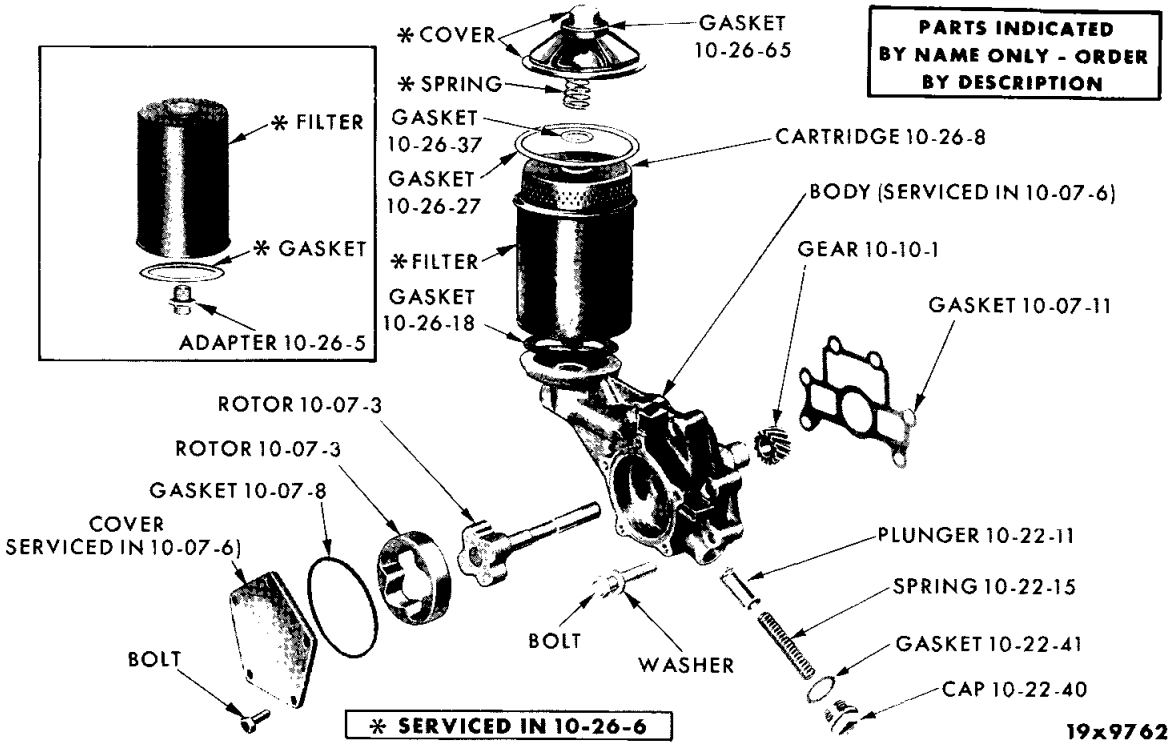

OIL PUMP AND FILTER (6 CYLINDER) - 170 AND 225 CU. IN. DISPLACEMENT

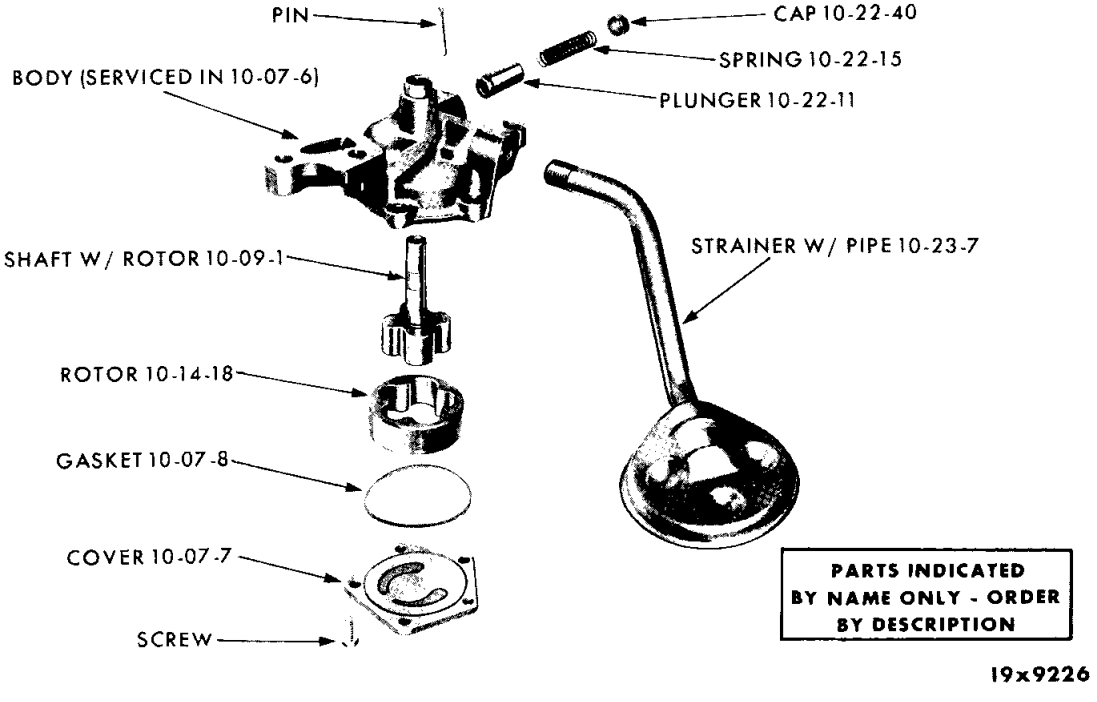

OIL PUMP - 273 AND 318 CU. IN. DISPLACEMENT

MyMopar.com

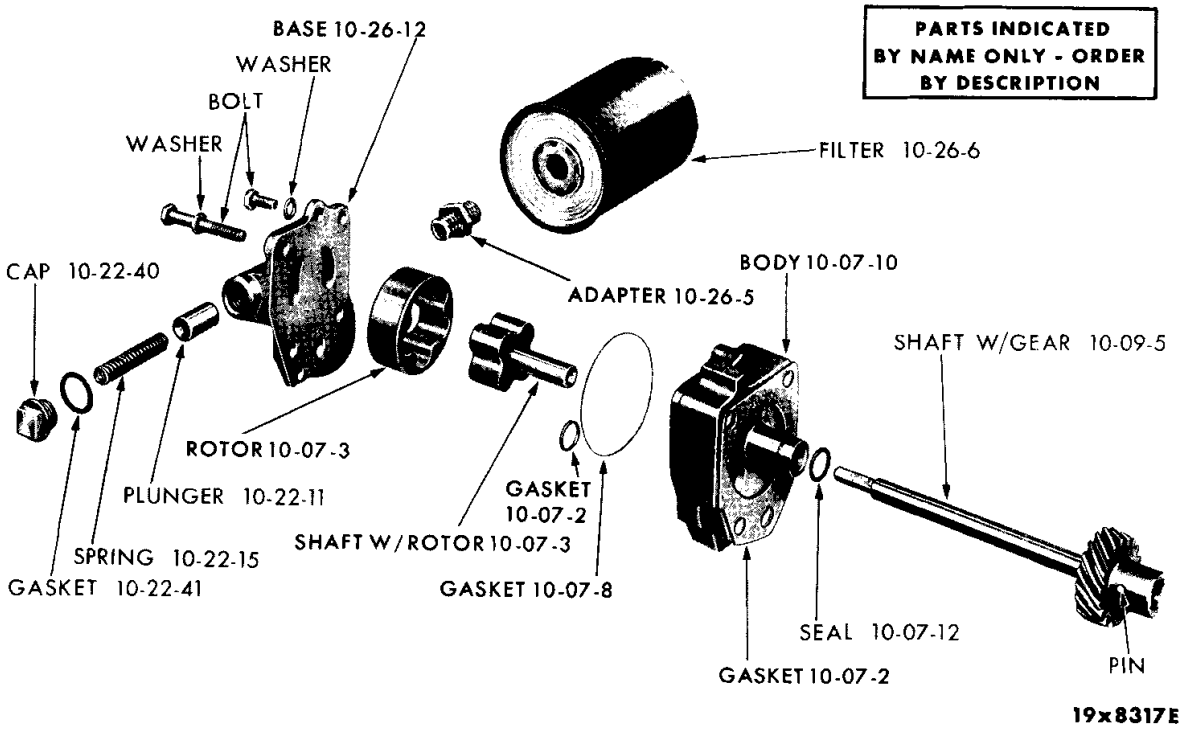

OIL PUMP - 361, 383, 413 AND 426 CU. IN. DISPLACEMENT

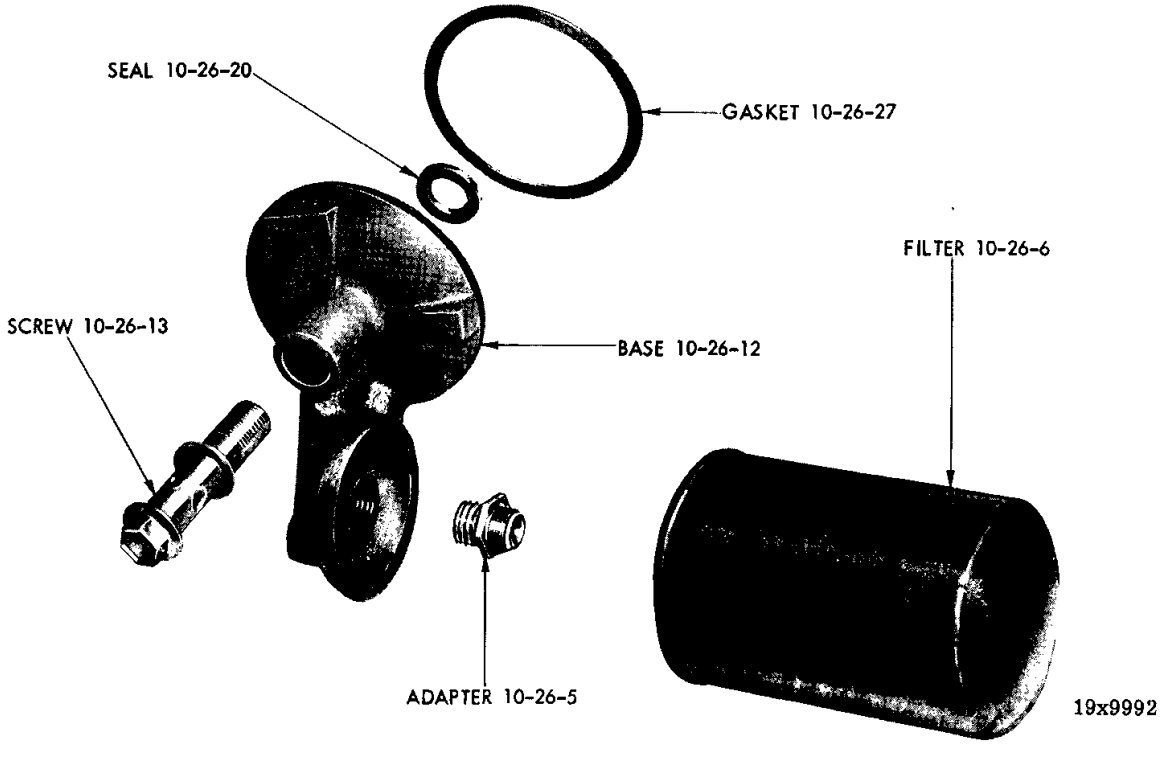

OIL FILTER - 273 CU. IN. ENGINE (SEALED CAN TYPE)

MyMopar.com

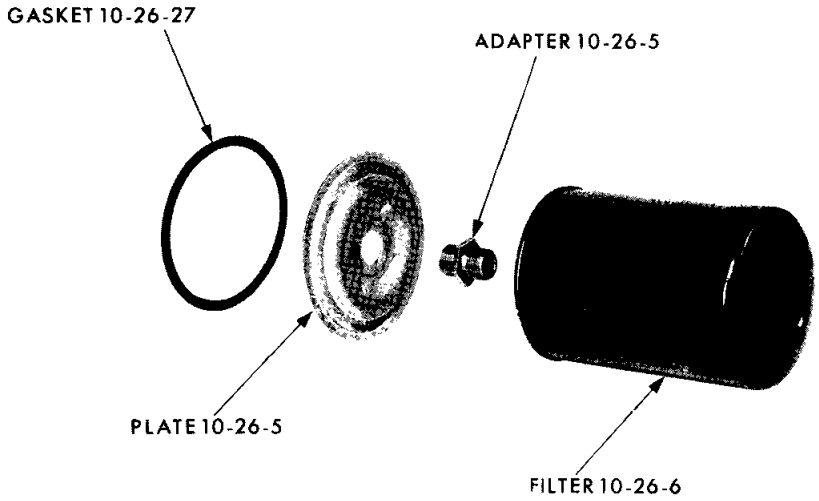

19x9489

OIL FILTER - 318 CU. IN. DISPLACEMENT (SEALED CAN TYPE)

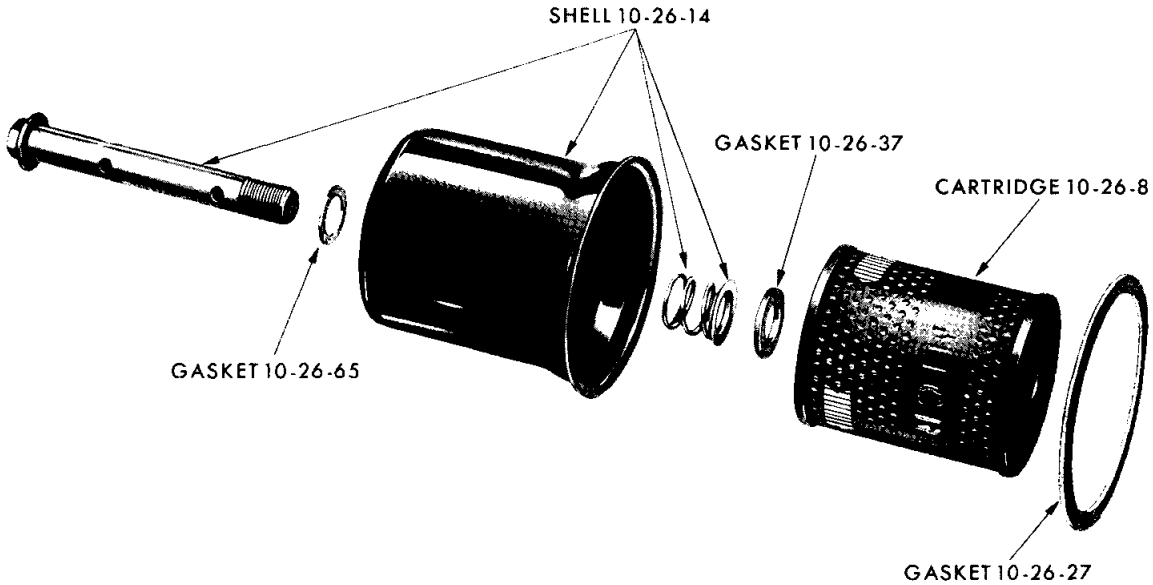

19x8591

OIL FILTER - 318 CU. IN. DISPLACEMENT (REPLACEABLE CARTRIDGE TYPE)

MyMopar.com

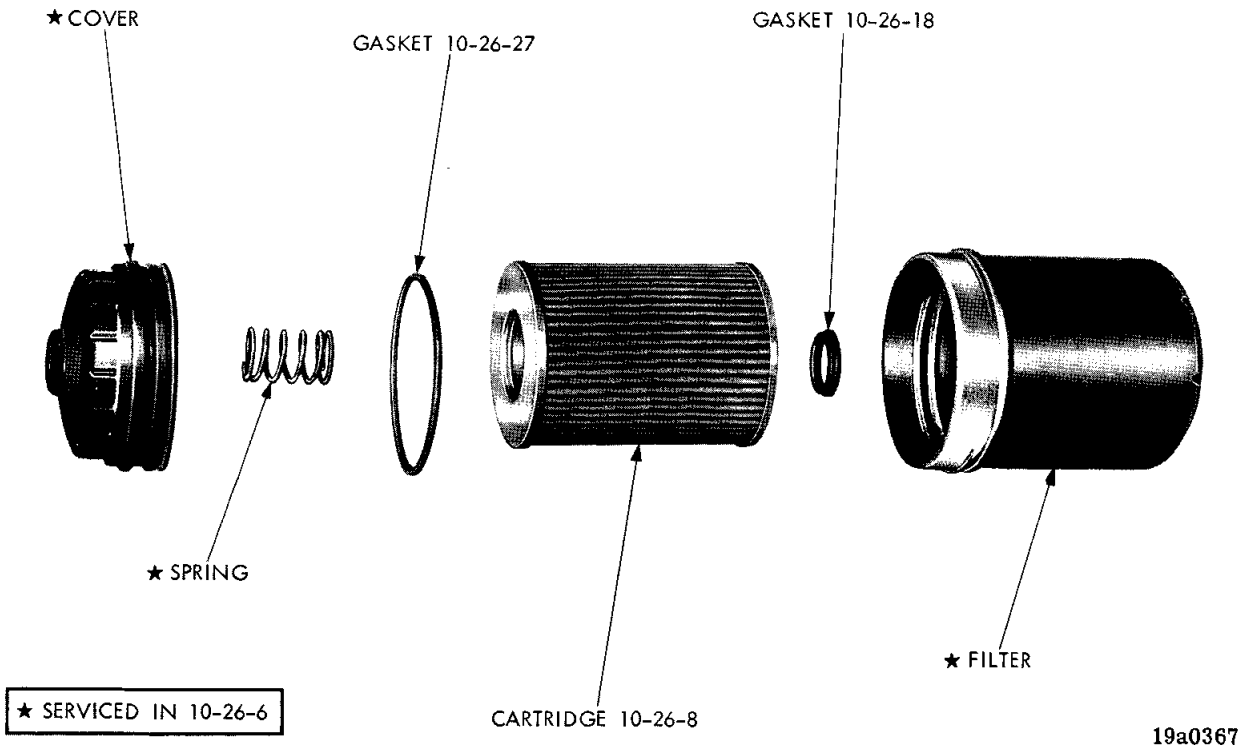

OIL FILTER - 273 CU. IN. DISPLACEMENT (REPLACEABLE CARTRIDGE TYPE)

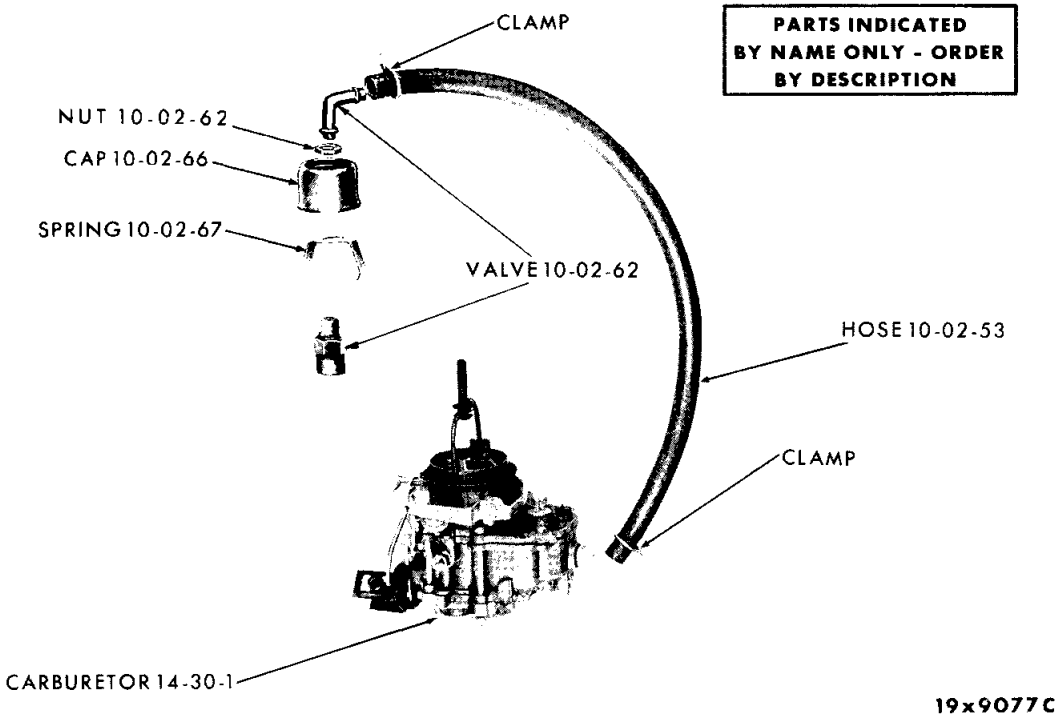

CRANKCASE - CLOSED VENT SYSTEM

MyMopar.com

CODE	PART NAME AND DESCRIPTION	CYL	PER CAR	VALIANT / DART	PLYMOUTH BELVEDERE / DODGE CORONET	PLYMOUTH FURY / DODGE POLARA / CHRYSLER	IMPERIAL
10-01-0	**CRANKCASE VENT INLET AIR CLEANER**						
10-01-21	AIR CLEANER, Std., Painted		1	2402 199	2402 199	2402 199	2402 199
	Heavy Duty, Painted		1	2402 013	2402 013	2402 013	2402 013
	California Usage, Painted		1	2463 989	2463 989	2463 989	2463 989
	V2, L2, w/4 Barrel Carb., Chrome	8	1	2463 858			
	P2, D2, 426 cu. in. Eng., Std., Chrome	8	1	---- ---	---- ---	2463 858	
	V2, L2, w/4 Barrel Carb., Chrome, California Usage	8	1	2463 866			
	R2, W2, 426 cu. in. Eng., Hemispherical, Chrome	8	1	---- ---	*2463 858		
	R2, W2, 426 cu. in. Eng., Hemispherical, Chrome, California Usage	8	1	---- ---	*2463 858		
	P2, D2, 426 cu. in. Eng., Std., Chrome, California Usage	8	1	---- ---	---- ---	2463 866	
10-01-40	CLAMP, Inlet Air Cleaner to Carburetor Air Cleaner Hose		2	870 469	870 469	870 469	870 469
10-01-62	HOSE, Air Cleaner Inlet to Carburetor Air Cleaner, California Usage, 42 1/4" lgh.		★	2200 560	2200 560	2200 560	2200 560
10-02-0	**CRANKCASE CLOSED VENT SYSTEM**						
10-02-53	HOSE, Vent Valve Cap to Carburetor (sold by the inch)		★	883 031	883 031	883 031	883 031
10-02-62	VALVE VENT PACKAGE, 170 cu. in. Eng.	6	1	*2421 288			
	Except 170 cu. in. Eng.		1	*2421 289	*2421 289	*2421 289	*2421 289
10-02-66	CAP, Vent Valve, Painted		1	2203 116	2203 116	2203 116	2203 116
	V2, L2, w/4 Barrel Carb., Chrome	8	1	2463 860			
	R2, W2, 426 cu. in. Eng., Hemispherical, Chrome	8	1	---- ---	*2463 860		
	P2, D2, w/426 cu. in. Eng., Chrome	8	1	---- ---	---- ---	2463 860	
10-02-67	SPRING, Vent Valve		1	2203 117	2203 117	2203 117	2203 117
10-03-0	**OIL LEVEL INDICATOR**						
10-03-4	INDICATOR	6	1	2463 444	2463 445	2463 444	
	273, 318, cu. in. Eng.	8	1	2402 839	2402 839	2402 839	
	361, 383, cu. in. Eng.	8	1	---- ---	2402 840		
	R2, W2, 426 cu. in. Eng., Std.	8	1	---- ---	2402 840		
	383, 413, cu. in. Eng.	8	1	---- ---	---- ---	2402 841	2402 841
	P2, D2, 426 cu. in. Eng.	8	1	---- ---	---- ---	2402 841	
	R2, W2, 426 cu. in. Eng., Hemispherical	8	1	---- ---	2532 216		
10-03-7	TUBE	6	1	2406 366	2406 366	2406 366	
	273, 318, cu. in. Eng.	8	1	1859 788	1859 788	1859 788	
	273, 318, cu. in. Eng., w/Leece-Neville Alternator, w/o Air Conditioning	8	1	---- ---	2463 010	2463 010	
	361, 383, cu. in. Eng.	8	1	---- ---	2465 691		
	R2, W2, 426 cu. in. Eng., Std.	8	1	---- ---	2465 691		
	383, 413, cu. in. Eng.	8	1	---- ---	---- ---	2465 691	2465 691
	P2, D2, 426 cu. in. Eng.	8	1	---- ---	---- ---	2465 691	
	R2, W2, 426 cu. in. Eng., Hemispherical	8	1	---- ---	2532 215		
10-07-0	**OIL PUMP**						
10-07-2	GASKET and SEAL PACKAGE, except 318 cu. in. Eng.	8	1	---- ---	2084 355	2084 355	2084 355
10-07-3	SHAFT and ROTOR PACKAGE	6	1	2084 415	2084 415	2084 415	
	Except 318 cu. in. Eng.	8	1	---- ---	2084 354	2084 354	2084 354
10-07-4	ADAPTER, Cover to Oil Filter, R2, W2, 426 cu. in. Eng., Hemispherical	8	1	---- ---	2468 364		

TYPE LETTERS Indicate: V - Valiant, L - Dart, R - Belvedere, W - Coronet, P - Plymouth, D - Dodge, C - Chrysler, Y - Imperial

★Indicates use as required. Numerals in parentheses ( ) refer to notes. Printed in U.S.A.

⊟Indicates parts not listed in any previous parts book. Prices and specifications subject to change without notice.

• Indicates change or addition. May 1965, Supersedes Nov. 30, 1964.

MyMopar.com

CODE	PART NAME AND DESCRIPTION	CYL	PER CAR	VALIANT / DART	PLYMOUTH BELVEDERE / DODGE CORONET	PLYMOUTH FURY / DODGE POLARA / CHRYSLER	IMPERIAL
10-07-0	**OIL PUMP - Cont'd**						
10-07-6	PUMP	6	1	2463 382	2463 382	2463 382	
	273, 318, cu. in. Eng.	8	1	2402 474	2402 474	2402 474	
	361, 383, 413, 426, cu. in. Eng.	8	1	---- ---	2465 089	2465 089	2465 089
	R2, W2, 426 cu. in. Eng., Std.	8	1	---- ---	2465 089		
	R2, W2, 426 cu. in. Eng., Hemispherical	8	1	---- ---	*2465 092		
10-07-7	COVER, 273, 318, cu. in. Eng.	8	1	2206 095	2206 095	2206 095	
10-07-8	GASKET, Cover		1	2268 921	2268 921	2268 921	2268 921
10-07-10	BODY, 361, 383, 413, 426, cu. in. Eng.	8	1	---- ---	1737 718	1737 718	1737 718
	426 cu. in. Eng., Std.	8	1	---- ---	1737 718		
	426 cu. in. Eng., Hemispherical	8	1	---- ---	2406 662		
10-07-11	GASKET, Body	6	1	2121 404	2121 404	2121 404	
10-07-12	SEAL, Body, 361, 383, 413, 426, cu. in. Eng.	8	1	---- ---	1855 328	1855 328	1855 328
10-07-14	SHIELD, Oil Pump Body Splash	6	1	2269 072	2269 072	2269 072	
10-09-0	**OIL PUMP DRIVE SHAFT**						
10-09-1	SHAFT, w/Inner ROTOR, 273, 318, cu. in. Eng.	8	1	2121 530	2121 530	2121 530	
10-09-5	SHAFT, Oil Pump and Distributor Drive, w/GEAR, 273, 318, cu. in. Eng.	8	1	2121 535	2121 535	2121 535	
	361, 383, 413, 426, cu. in. Eng.	8	1	---- ---	1739 604	1739 604	1739 604
	426 cu. in. Eng., Std.	8	1	---- ---	1739 604		
	426 cu. in. Eng., Hemispherical	8	1	---- ---	2402 639		
10-09-7	BUSHING	8	1	1737 725	1737 725	1737 725	1737 725
10-10-0	**OIL PUMP DRIVE GEAR**						
10-10-1	GEAR	6	1	1947 225	1947 225	1947 225	
10-14-0	**OIL PUMP ROTOR**						
10-14-18	ROTOR, Outer, 273, 318, cu. in. Eng.	8	1	2121 531	2121 531	2121 531	
10-22-0	**OIL PRESSURE RELIEF VALVE**						
10-22-11	PLUNGER	6	1	2406 580	2406 580	2406 580	
		8	1	2463 541	2463 541	2463 541	2463 541
10-22-15	SPRING, Std., Red	6	1	1737 742	1737 742	1737 742	
	273, 318, cu. in. Eng., Std., Red	8	1	2264 587	2264 587	2264 587	
	361, 383, 413, 426, cu. in. Eng., Std., Red	8	1	---- ---	1737 742	1737 742	1737 742
	426 cu in. Eng., Std., Red	8	1	---- ---	1737 742		
	426 cu. in. Eng., Hemispherical, Color Plain	8	1	---- ---	2406 677		
10-22-16	DAMPER, Spring, 361, 383, 413, 426, cu. in. Eng.	8	1	---- ---	2202 845	2202 845	2202 845
10-22-40	CAP, Plunger	6	1	618 621	618 621	618 621	
	273, 318, cu. in. Eng.	8	1	2264 586	2264 586	2264 586	
	361, 383, 413, 426, cu. in. Eng.	8	1	---- ---	618 621	618 621	618 621
10-22-41	GASKET, Cap		1	618 622	618 622	618 622	618 622

TYPE LETTERS Indicate: V - Valiant, L - Dart, R - Belvedere, W - Coronet, P - Plymouth, D - Dodge, C - Chrysler, Y - Imperial

★Indicates use as required. Numerals in parentheses ( ) refer to notes. Printed in U.S.A.

⊟Indicates parts not listed in any previous parts book. Prices and specifications subject to change without notice.

March 1966 Supersedes May 1965. * Indicates change or addition.

MyMopar.com

CODE	PART NAME AND DESCRIPTION	CYL	PER CAR	VALIANT / DART	PLYMOUTH BELVEDERE / DODGE CORONET	PLYMOUTH FURY / DODGE POLARA / CHRYSLER	IMPERIAL
10-23-0	**OIL STRAINER**						
10-23-7	STRAINER, w/PIPE	6	1	2206 317			
	w/Heavy Duty Filter, Police and Taxi, w/Auto. Trans.	6	1	---- ---	2206 317		
	w/Heavy Duty Filter, Police and Taxi, w/Manual Trans.	6	1	---- ---	2206 261		
	w/Std. Filter, except Police and Taxi.	6	1	---- ---	2206 261		
	P1	6	1	---- ---	---- ---	2463 606	
	273, 318, cu. in. Eng.	8	1	2468 849	2468 849		
	361, 383, cu. in. Eng.	8	1	---- ---	2206 458		
	426 cu. in. Eng., Std.	8	1	---- ---	2206 458		
	426 cu. in. Eng., Hemispherical	8	1	---- ---	2468 814		
	383, 413, 426, cu. in. Eng.	8	1	---- ---	---- ---	2463 467	1859 947
10-24-0	**OIL PAN**						
10-24-1	GASKET SET, 170, 225, cu. in. Eng.	6	1	2240 647	2240 647	2240 647	
	273, 318, cu. in. Eng.	8	1	1879 520	1879 520	1879 520	
10-24-4	PAN, w/Drain PLUG	6	1	2406 688			
	w/Drain PLUG, Police and Taxi	6	1	---- ---	2406 688		
	w/o Drain Plug	6	1	---- ---	2206 463		
	w/o Drain Plug	6	1	---- ---	---- ---	2468 413	
	w/o Drain Plug, 273, 318, cu. in. Eng.	8	1	2463 517	2463 517	2463 517	
	w/Drain PLUG, 361, 383, cu. in. Eng.	8	1	---- ---	2465 195		
	w/Drain PLUG, 426 cu. in. Eng., Std.	8	1	---- ---	2465 195		
	w/o Drain Plug, 426 cu. in. Eng., Hemispherical	8	1	---- ---	2468 981		
	w/o Drain Plug, 361, 383, 413, 426, cu. in. Eng.	8	1	---- ---	---- ---	2463 448	
	w/Drain PLUG	8	1	---- ---	---- ---	---- ---	2268 459
10-24-8	GASKET, 361, 383, 413, 426, cu. in. Eng.	8	1	---- ---	1737 770	1737 770	1737 770
10-24-23	SCREW, w/WASHER, Pan Attaching, 5/16"-18 x 13/16", 170, 225, 273, 318, cu.in. Eng.		★	1947 953	1947 953	1947 953	
	5/16"-18 x 9/16", 361, 383, 413, 426, cu. in. Eng.	8	★	---- ---	2121 573	2121 573	2121 573
	5/16"-18 x 1", 273, 318, cu. in. Eng.	8	2	1675 958	1675 958	1675 958	
	To Bearing Seal Retainer, 5/16"-18 x 15/16"	6	2	1343 212	1343 212	1343 212	
	5/16"-18 x 9/16"	8	2	---- ---	2121 573	2121 573	2121 573
10-24-37	PLUG, Drain		1	2125 890	2125 890	2125 890	2125 890
10-24-38	GASKET, Drain Plug		1	2268 513	2268 513	2268 513	2268 513
10-26-0	**OIL FILTER**						
10-26-5	ADAPTER, Base to Filter		1	1739 619	1739 619	1739 619	1739 619
	Filter to Cylinder Block, 318 cu. in. Eng.	8	1	---- ---	2206 372	2206 372	
	PLATE, Filter Adapter, 273, 318, cu. in. Eng.	8	1	---- ---	2402 103	2402 103	
10-26-6	FILTER, Sealed Can Type, w/Built in GASKET, Std.		1	1851 658	1851 658	1851 658	1851 658
	R2, W2, 426 cu. in. Eng., Hemispherical.	8	1	---- ---	2536 186		
	Replaceable Cartridge Type, Includes CARTRIDGE, Heavy Duty, w/Bolt on Type Cover	6	1	*2128 548	*2128 548	*2128 548	
	Use w/Screw on Type Cover	6	1	*2532 756	*2532 756	*2532 756	
10-26-8	CARTRIDGE, use w/Bolt on Type Cover		1	*2129 023	*2129 023	*2129 023	
	Use w/Screw on Type Cover		1	*2532 752	*2532 752	*2532 752	

TYPE LETTERS Indicate: V - Valiant, L - Dart, R - Belvedere, W - Coronet, P - Plymouth, D - Dodge, C - Chrysler, Y - Imperial

★Indicates use as required. Numerals in parentheses ( ) refer to notes. Printed in U.S.A.

⊟Indicates parts not listed in any previous parts book. Prices and specifications subject to change without notice.

* Indicates change or addition. March 1966 Supersedes May 1965.

MyMopar.com

CODE	PART NAME AND DESCRIPTION	CYL	PER CAR	VALIANT / DART	PLYMOUTH BELVEDERE / DODGE CORONET	PLYMOUTH FURY / DODGE POLARA / CHRYSLER	IMPERIAL
10-26-0	**OIL FILTER - Cont'd**						
10-26-12	BASE, Filter, 273 cu. in. Eng.	8	1	2465 831			
	361, 383, 413, cu. in. Eng.	8	1	---- ---	2465 090	2465 090	2465 090
	426 cu. in. Eng., Std.	8	1	---- ---	2465 090		
	426 cu. in. Eng., Hemispherical	8	1	---- ---	2465 091		
10-26-13	SCREW, Oil Filter Base	8	1	2468 593			
10-26-14	SHELL, Filter, 273, 318, cu. in. Eng.	8	1	2448 371	2448 371	2448 371	
10-26-18	GASKET, Filter Body, use w/2129 023 Cartridge		1	*2268 870	*2268 870	*2268 870	
	Use w/2532 752 Cartridge		1	*2532 753	*2532 753	*2532 753	
10-26-20	SEAL, Filter Base Screw, 273 cu. in. Eng.	8	1	2463 512			
10-26-27	GASKET, Cover, use w/2129 023 Cartridge		1	*2129 024	*2129 024	*2129 024	
	Use w/2532 752 Cartridge		1	*2532 754	*2532 754	*2532 754	
	Base to Cylinder Block, 273 cu. in. Eng.	8	1	1557 575	1557 575		
	Filter Adapter Plate, 273, 318 cu. in. Eng.	8	1	---- ---	1557 575	1557 575	
	Filter Shell, 273, 318, cu. in. Eng.	8	1	---- ---	1557 575	1557 575	
10-26-37	GASKET, Spring Retainer, 273, 318, cu. in. Eng.	8	1	---- ---	1557 584	1557 584	
10-26-46	STANDPIPE, w/VALVE	6	1	2402 607	2402 607	2402 607	
10-26-52	GASKET, Filter Standpipe Valve Adapter	6	1	2120 017	2120 017	2120 017	
10-26-65	GASKET, Filter Tube Cap		1	2202 435			
		6	1	---- ---	2202 435	2202 435	
	273, 318, cu. in. Eng.	8	1	1557 581	1557 581	1557 581	

NOTES

TYPE LETTERS Indicate: V - Valiant, L - Dart, R - Belvedere, W - Coronet, P - Plymouth, D - Dodge, C - Chrysler, Y - Imperial

★Indicates use as required. Numerals in parentheses ( ) refer to notes. Printed in U.S.A.

⊟Indicates parts not listed in any previous parts book. Prices and specifications subject to change without notice.

March 1966 Supersedes May 1965. * Indicates change or addition.

MyMopar.com

GROUP 11 - EXHAUST

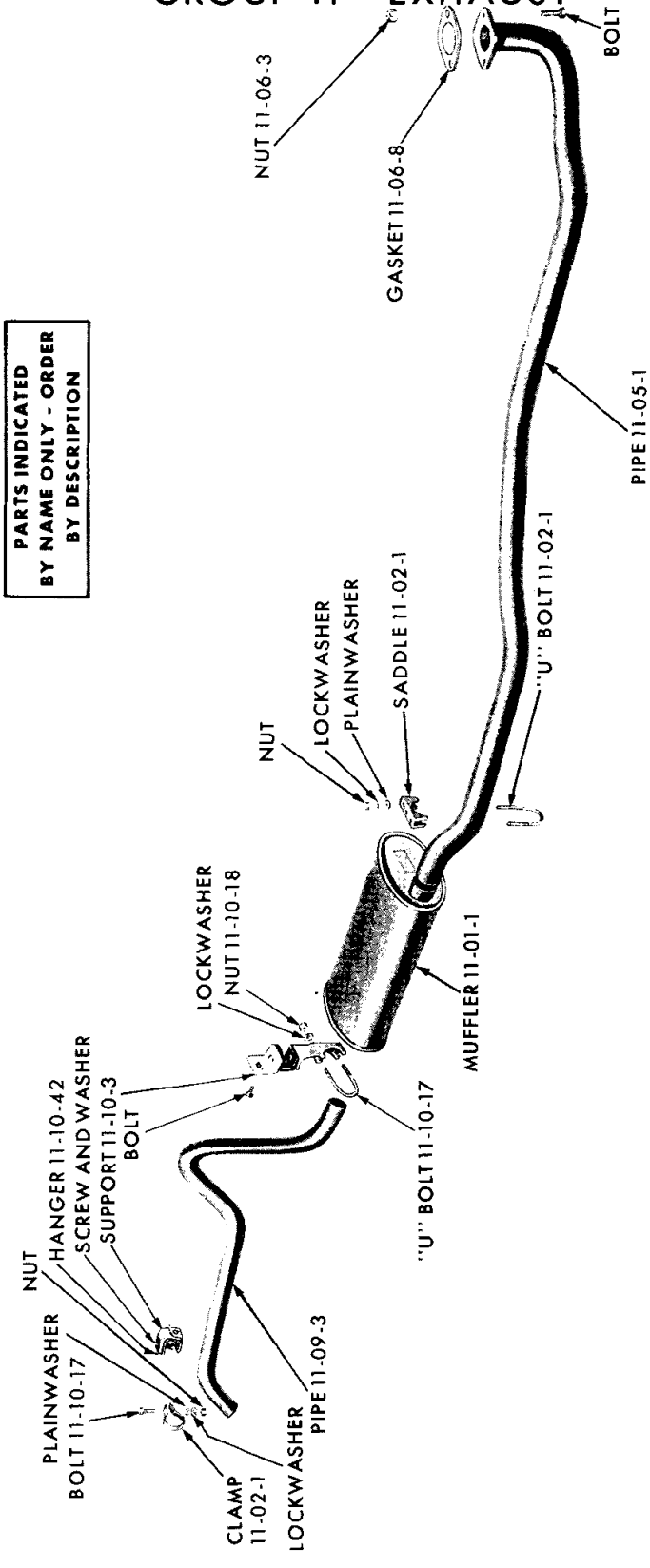

19x8748D

SINGLE EXHAUST SYSTEM (6 CYLINDER) - VALIANT AND DART

MyMopar.com

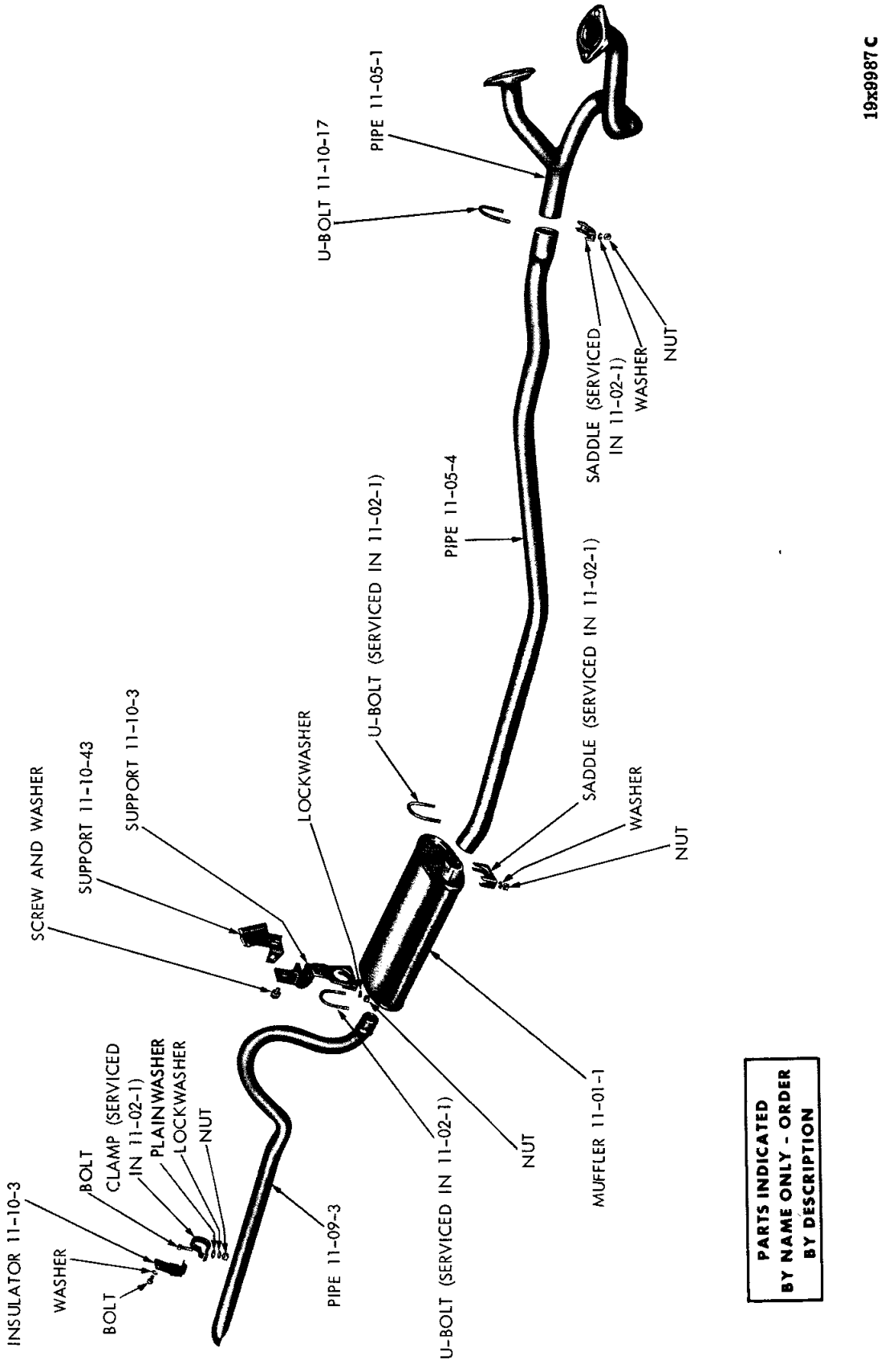

SINGLE EXHAUST SYSTEM (V8 CYLINDER) - VALIANT AND DART

MyMopar.com

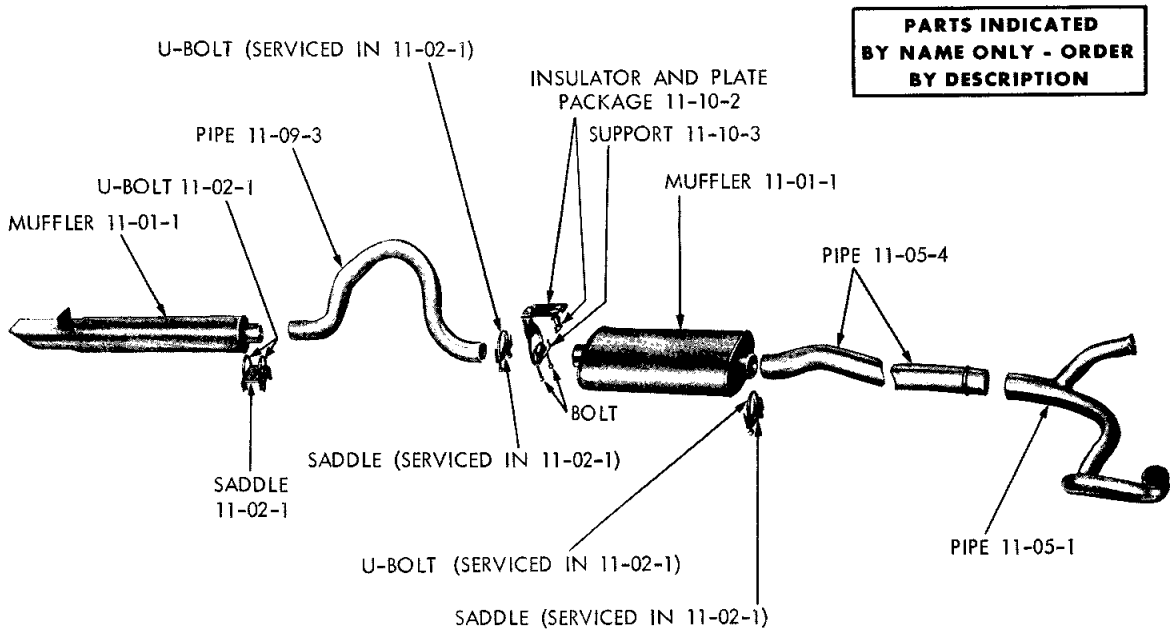

SINGLE EXHAUST SYSTEM (V8 CYLINDER) - VALIANT AND DART WITH POWER PACK, 1-4 BARREL CARBURETOR

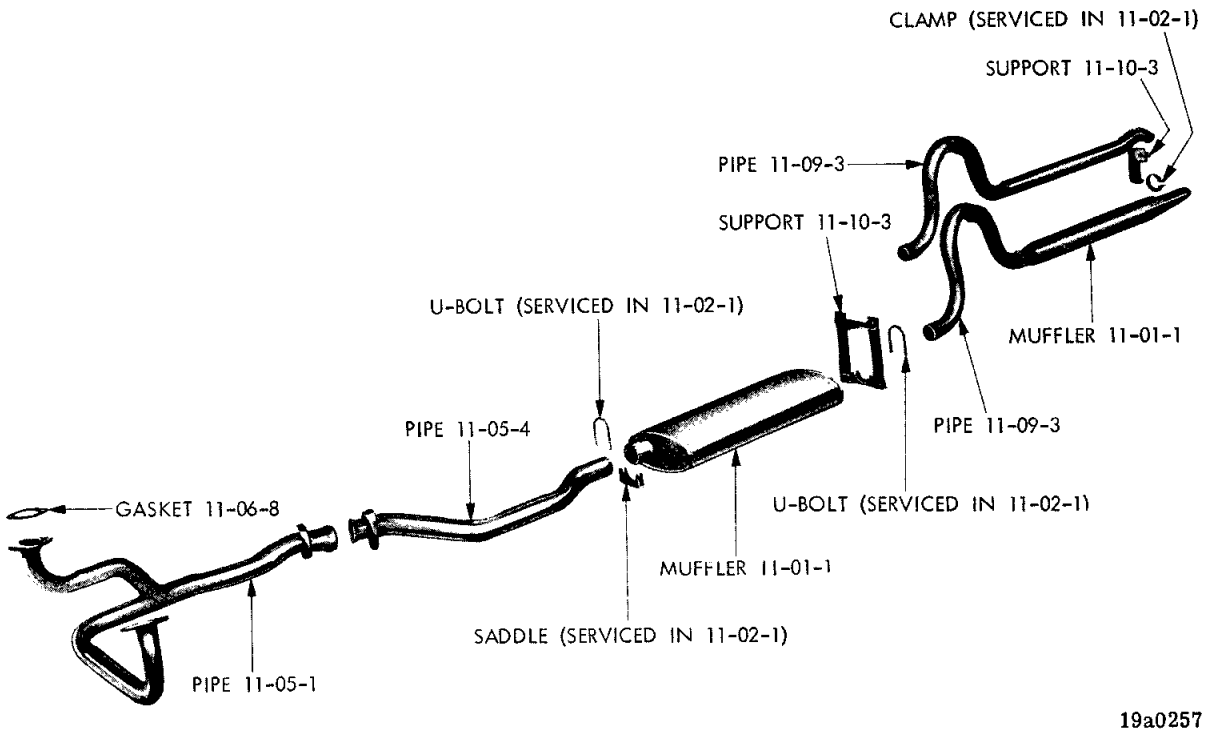

SINGLE EXHAUST SYSTEM (V8 CYLINDER - "B" ENGINE) - PLYMOUTH FURY, DODGE POLARA AND CHRYSLER

MyMopar.com

NOTES

MyMopar.com

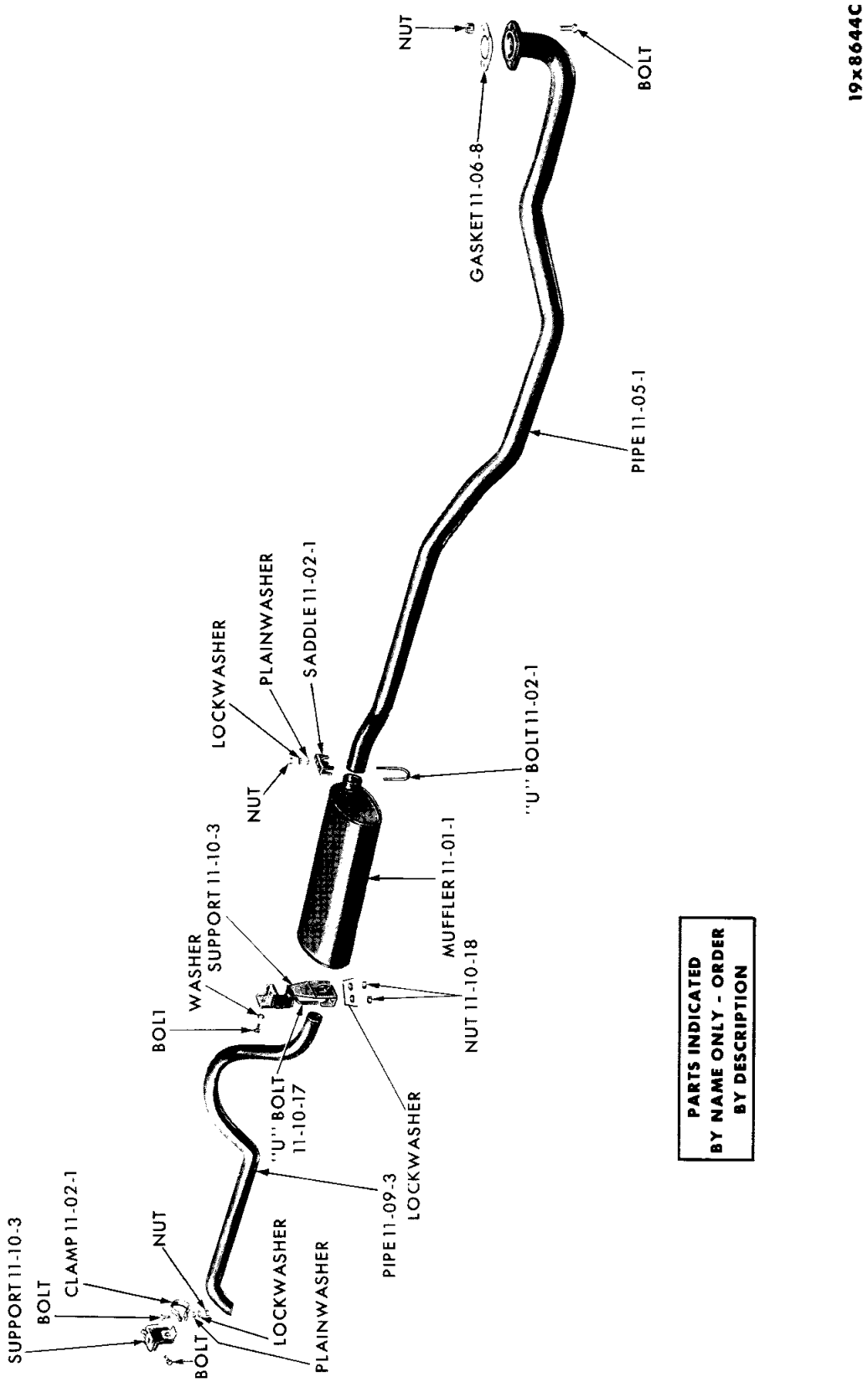

SINGLE EXHAUST SYSTEM (6 CYLINDER) - BELVEDERE, PLYMOUTH, CORONET AND DODGE

MyMopar.com

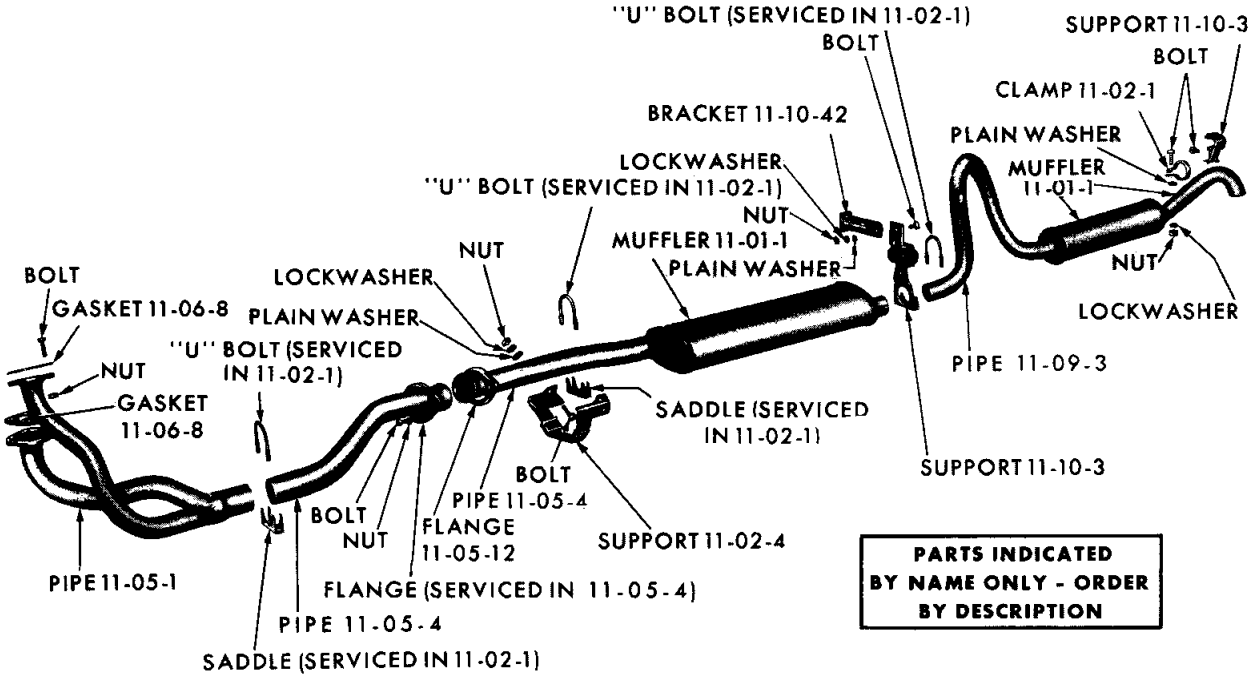

SINGLE EXHAUST SYSTEM (V8 CYLINDER) - IMPERIAL EXCEPT CONVERTIBLE COUPE

NOTES

MyMopar.com

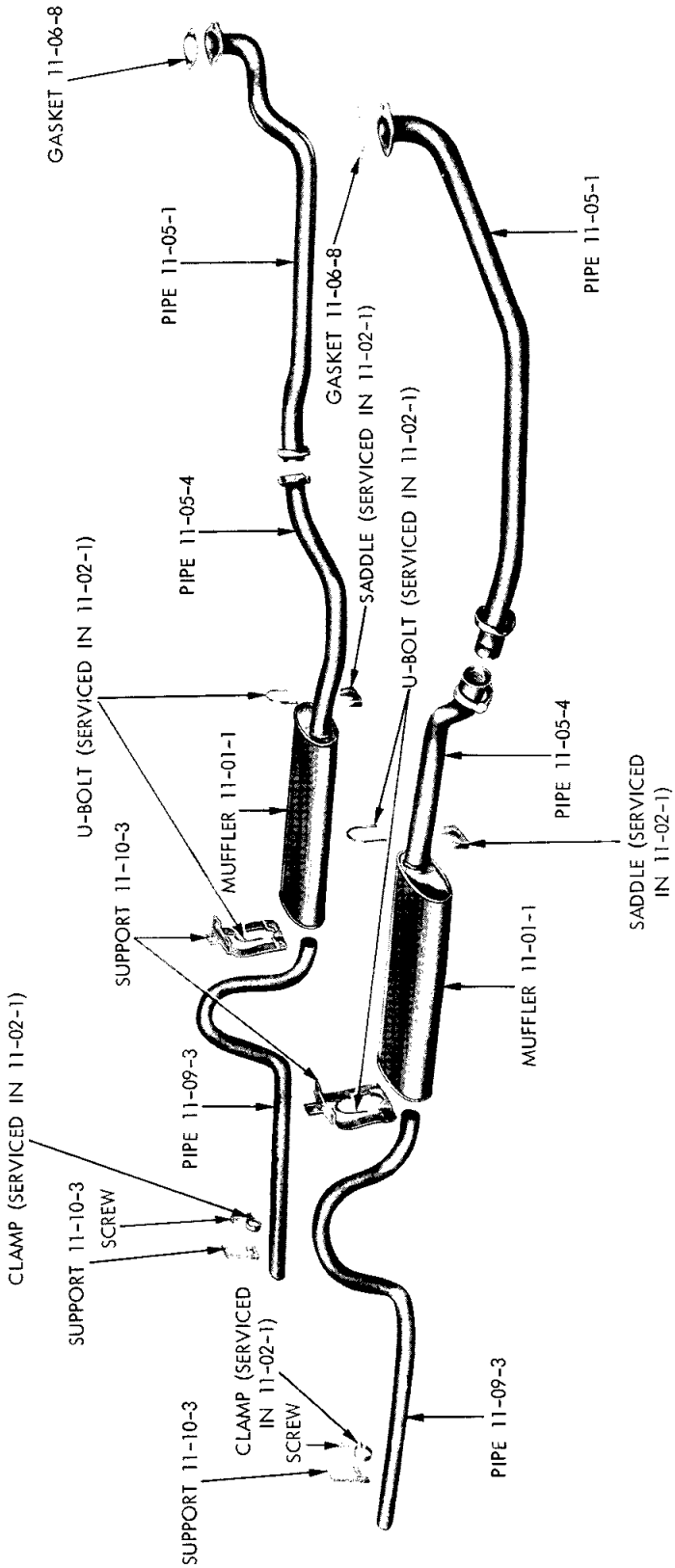

DUAL EXHAUST SYSTEM (V8 CYLINDER WITH 426 CU. IN. ENGINE) - PLYMOUTH AND DODGE

MyMopar.com

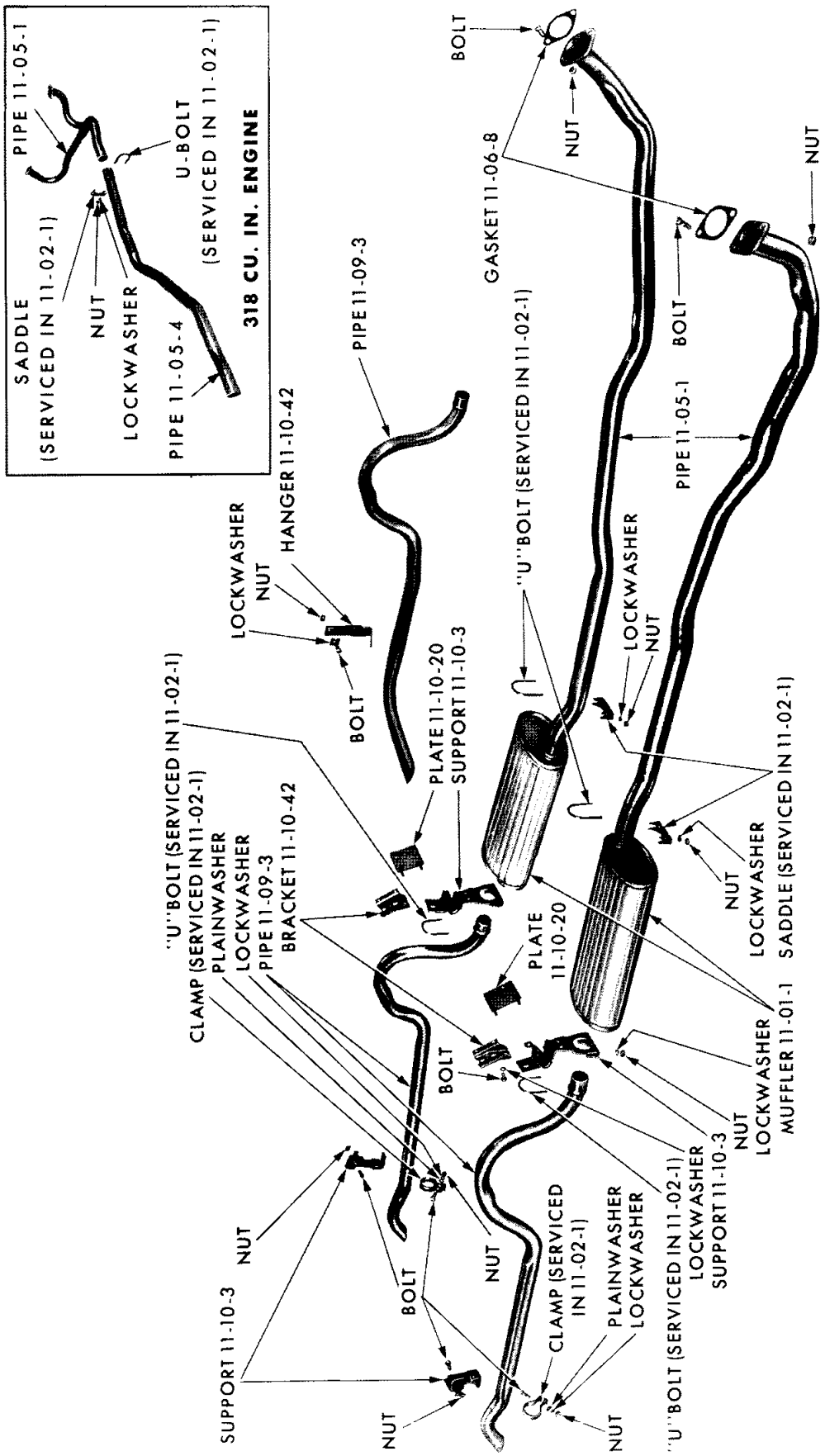

EXHAUST SYSTEM (V8 CYLINDER) - BELVEDERE, PLYMOUTH, CORONET AND DODGE

PARTS INDICATED BY NAME ONLY - ORDER BY DESCRIPTION

MyMopar.com

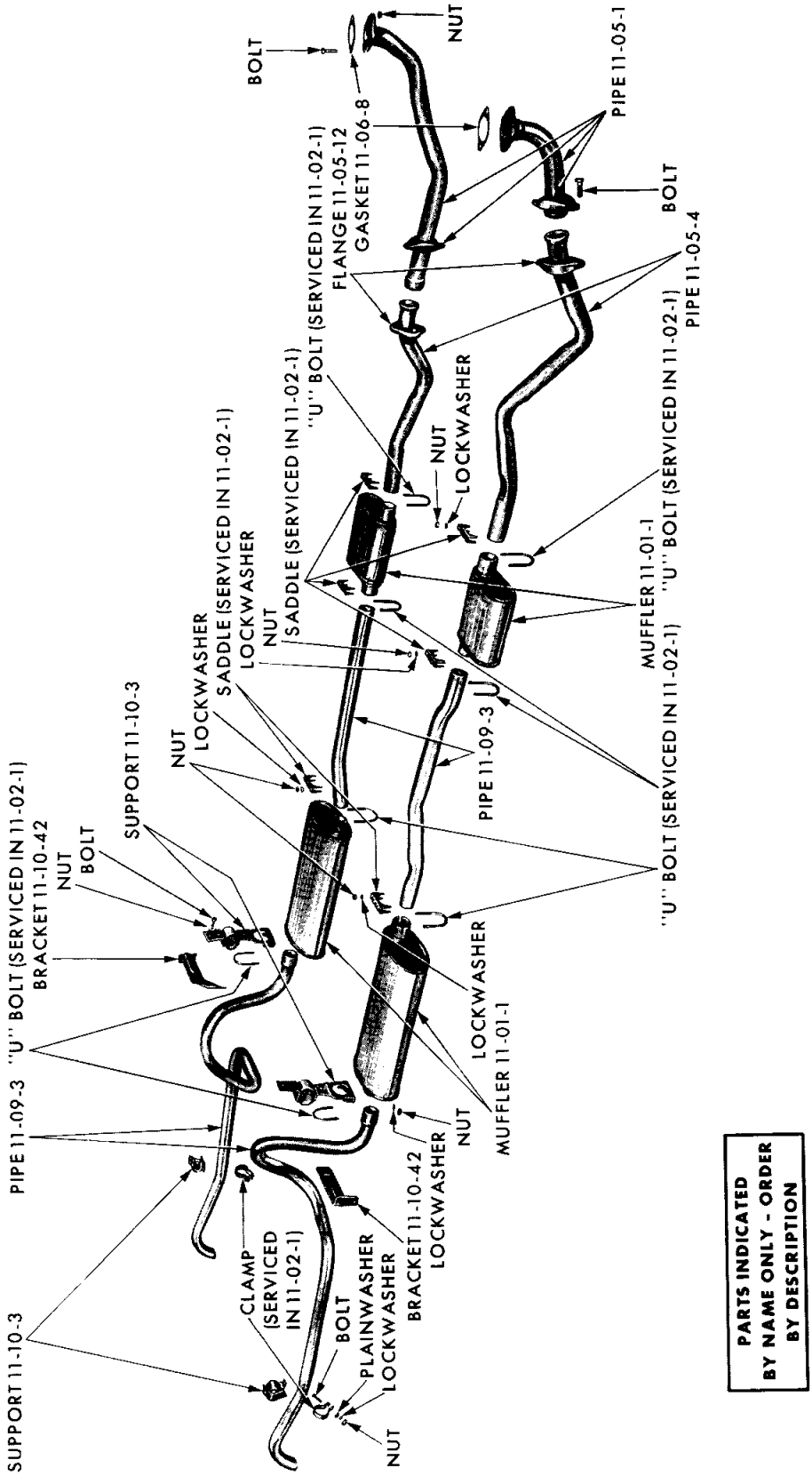

DUAL EXHAUST SYSTEM (V8 CYLINDER) - IMPERIAL CONVERTIBLE COUPE

MyMopar.com

NOTES

MyMopar.com

CODE	PART NAME AND DESCRIPTION	CYL	PER CAR	VALIANT / DART	PLYMOUTH BELVEDERE / DODGE CORONET	PLYMOUTH FURY / DODGE POLARA / CHRYSLER	IMPERIAL
	SINGLE EXHAUST						
11-01-0	**MUFFLER**						
11-01-1	MUFFLER, Aluminized	6	1	2409 125	2409 126	2534 430	
	Zinc Coated	6	1	2208 370	2298 913	2534 440	
	Aluminized, w/2 Barrel Carburetor	8	1	2460 823			
	Zinc Coated, w/2 Barrel Carburetor	8	1	2460 824			
	Aluminized, w/1-4 Barrel Carburetor, w/Power Pack, except Sta. Wgn.	8	1	*2660 541			
	Zinc Coated, w/1-4 Barrel Carburetor, w/Power Pack, except Sta. Wgn.	8	1	*2660 548			
	Rear, w/1-4 Barrel Carburetor, w/Power Pack, except Sta. Wgn.	8	1	*2660 445			
	Aluminized, Police and Taxi, 2 D., 4 D. and Sta. Wgn.	6	1	---- ---	2409 126	2534 430	
	Zinc Coated, Police and Taxi, 2 D., 4 D. and Sta. Wgn.	6	1	---- ---	2298 913	2534 440	
	Aluminized, w/273, 318 and 361 cu. in. Eng.	8	1	---- ---	2409 127		
	Zinc Coated, w/273, 318 and 361 cu. in. Eng.	8	1	---- ---	2298 915		
	Aluminized, w/318 cu. in. Eng., P, D	8	1	---- ---	---- ---	2534 431	
	Zinc Coated, w/318 cu. in. Eng., P, D	8	1	---- ---	---- ---	2534 441	
	Aluminized, P w/383 cu. in. Eng., D w/383 and 413 cu. in. Eng., C-L w/383 cu. in. Eng., C-M w/383 cu. in. Eng., C-H	8	1	---- ---	---- ---	2534 432	
	Zinc Coated, P w/383 cu. in. Eng., D w/383 and 413 cu. in. Eng., C-L w/383 cu. in. Eng., C-M w/383 cu. in. Eng., C-H	8	1	---- ---	---- ---	2534 442	
	Rear, w/Rear Tail Pipe, w/383 cu. in. Eng., except Sta. Wgn., D, C-L, C-M	8	1	---- ---	---- ---	2460 775	
	Rear, w/Rear Tail Pipe, w/413 cu. in. Eng., except Sta. Wg., D, C-H	8	1	---- ---	---- ---	2530 786	
	Rear, w/Rear Tail Pipe, w/413 cu. in. Eng., Sta. Wgn., D, C-H	8	1	---- ---	---- ---	2460 782	
	Front, except Cv. Cp., w/2" Pipe		1	---- ---	---- ---	---- ---	2409 129
	Front, except Cv. Cp., w/2 1/4" Pipe		1	---- ---	---- ---	---- ---	2660 433
	Rear, w/Rear Tail Pipe, except Cv. Cp., w/2" Pipe		1	---- ---	---- ---	---- ---	2530 080
	Rear, w/Rear Tail Pipe, except Cv. Cp., w/2 1/4" Pipe		1	---- ---	---- ---	---- ---	2660 434
	DUAL EXHAUST						
	Right, Aluminized, w/383 cu. in. Eng.	8	1	---- ---	2409 130		
	Left	8	1	---- ---	*2409 127		
	Right, Aluminized, w/426 cu. in. Eng., Std.	8	1	---- ---	2409 130		
	Left	8	1	---- ---	*2409 127		
	Zinc Coated, w/383 cu. in. Eng.	8	2	---- ---	2298 915		
	Zinc Coated, w/426 cu. in. Eng., Std.	8	2	---- ---	2298 915		
	Right, Aluminized, P w/383 and 426 cu. in. Eng., D w/426 cu. in. Eng., C-M w/413 cu. in. Eng., C-P, C-H	8	1	---- ---	---- ---	*2534 434	
	Left	8	1	---- ---	---- ---	*2534 433	
	Right, Aluminized, w/413 cu. in. Eng., Police, 4 D., D	8	1	---- ---	---- ---	*2781 251	
	Left	8	1	---- ---	---- ---	*2781 250	

TYPE LETTERS Indicate: V - Valiant, L - Dart, R - Belvedere, W - Coronet, P - Plymouth, D - Dodge, C - Chrysler, Y - Imperial

★Indicates use as required. Numerals in parentheses ( ) refer to notes. Printed in U.S.A.

⊟Indicates parts not listed in any previous parts book. Prices and specifications subject to change without notice.

* Indicates change or addition.

March 1966 Supersedes May 1965.

MyMopar.com

CODE	PART NAME AND DESCRIPTION	CYL	PER CAR	VALIANT / DART	PLYMOUTH BELVEDERE / DODGE CORONET	PLYMOUTH FURY / DODGE POLARA / CHRYSLER	IMPERIAL
11-01-0	**MUFFLER - Cont'd**						
	DUAL EXHAUST Cont'd						
11-01-1	MUFFLER - Cont'd						
	Zinc Coated, P w/383 and 426 cu. in Eng., D w/426 cu. in. Eng., C-M w/413 cu. in. Eng., C-P, C-H	8	2	---- ---	---- ---	*2534 443	
	Front, Cv. Cp.		2	---- ---	---- ---	---- ---	2405 331
	Rear, Cv. Cp.		2	---- ---	---- ---	---- ---	2405 335
11-02-0	**MUFFLER SUPPORT**						
	SINGLE EXHAUST						
11-02-1	CLAMP PACKAGE, Muffler to						
	Exhaust Pipe	6	1	1843 009	1843 010	1843 008	
	Police and Taxi	6	1	---- ---	1843 010	1843 008	
	Exhaust Extension Pipe, w/1-4 Barrel Carburetor, w/Power Pack, except Sta. Wgn.	8	1	1603 365			
	w/273 and 318 cu. in. Eng.	8	1	---- ---	1843 008		
	w/361 cu. in. Eng.	8	1	---- ---	1603 364		
	Exhaust Pipe Brace, Police and Taxi	6	1	---- ---	1843 010	1843 008	
	Muffler to Exhaust Extension, w/2 Barrel Carburetor	8	1	1843 008			
	w/1-4 Barrel Carburetor, w/Power Pack, except Sta. Wgn.	8	1	1603 364			
	w/273, 318 and 361 cu. in. Eng.	8	1	---- ---	1843 008		
	P w/318 and 383 cu. in. Eng., D w/318, 383 and 413 cu. in. Eng., C-L w/383 cu. in. Eng., C-M w/383 cu. in. Eng., C-H	8	1	---- ---	---- ---	1603 364	
	Except Cv. Cp.		1	---- ---	---- ---	---- ---	1603 365
	Rear Muffler Tail Pipe, w/413 cu. in. Eng., D, C-H	8	1	---- ---	---- ---	1843 008	
	Tail Pipe Front Support, w/1-4 Barrel Carburetor, w/Power Pack, except Sta. Wgn.	8	1	1603 364			
		6	1	---- ---	1843 009		
		8	1	---- ---	---- ---	1843 008	
	Except Cv. Cp.		1	---- ---	---- ---	---- ---	1843 008
	Tail Pipe Rear Support	6	1	2240 308	2240 311	2279 897	
	w/2 Barrel Carburetor	8	1	2279 897			
		8	1	---- ---	2279 897	2240 312	
	Except Cv. Cp.		1	---- ---	---- ---	---- ---	2240 312
	Front Muffler Support, except Cv. Cp.		1	---- ---	---- ---	---- ---	1603 365
	Rear Muffler Support, Sta. Wgn., D, C-H	8	1	---- ---	---- ---	1843 008	
	Intermediate to Exhaust Pipe, except Cv. Cp.		1	---- ---	---- ---	---- ---	1603 365
	DUAL EXHAUST						
	Muffler to Exhaust Pipe, w/383 cu. in. Eng.	8	2	---- ---	1843 008		
	w/426 cu. in. Eng., Std.	8	2	---- ---	1843 008		
	Muffler Exhaust Extension Pipe, P w/383 and 426 cu. in. Eng., D w/413 and 426 cu. in. Eng., C-M w/413 cu. in. Eng., C-P, C-H	8	2	---- ---	---- ---	1603 364	
	Cv. Cp.		2	---- ---	---- ---	---- ---	1843 008
	Front Muffler Intermediate Exhaust Pipe, Cv. Cp.		2	---- ---	---- ---	---- ---	1843 008
	Tail Pipe Front Support, P w/383 and 426 cu. in. Eng., D w/413 and 426 cu. in. Eng., C-M w/413 cu. in. Eng., C-P, C-H	8	2	---- ---	---- ---	1843 008	
	Cv. Cp.		2	---- ---	---- ---	---- ---	1843 009

TYPE LETTERS Indicate: V - Valiant, L - Dart, R - Belvedere, W - Coronet, P - Plymouth, D - Dodge, C - Chrysler, Y - Imperial

★Indicates use as required. Numerals in parentheses ( ) refer to notes. Printed in U.S.A.

⊟Indicates parts not listed in any previous parts book. Prices and specifications subject to change without notice.

MyMopar.com

CODE	PART NAME AND DESCRIPTION	CYL	PER CAR	VALIANT / DART	PLYMOUTH BELVEDERE / DODGE CORONET	PLYMOUTH FURY / DODGE POLARA / CHRYSLER	IMPERIAL
11-02-0	**MUFFLER SUPPORT - Cont'd**						
	DUAL EXHAUST - Cont'd						
11-02-1	CLAMP PACKAGE - Cont'd						
	Tail Pipe, Rear Support, w/383 cu. in. Eng.	8	2	---- ---	2279 897		
	w/426 cu. in. Eng., Std.	8	2	---- ---	2279 897		
	P w/383 and 426 cu. in. Eng., D w/413 and 426 cu. in. Eng., C-M w/413 cu. in. Eng., C-P, C-H	8	2	---- ---	---- ---	2240 312	
	Cv. Cp.		2	---- ---	---- ---	---- ---	2240 311
11-02-4	SUPPORT and INSULATOR, Rear Muffler, Sta. Wgn., D, C-H	8	1	---- ---	---- ---	2530 057	
	Front, except Cv. Cp.		1	---- ---	---- ---	---- ---	2461 526
	Front, Right, Cv. Cp.		1	---- ---	---- ---	---- ---	1820 319
	Front, Left, Cv. Cp.		1	---- ---	---- ---	---- ---	1820 318
11-02-13	BRACKET, Front Muffler Support, except Cv. Cp.		1	---- ---	---- ---	---- ---	2461 529
11-05-0	**EXHAUST PIPE**						
	SINGLE EXHAUST						
11-05-1	PIPE, Exhaust, W/170 cu. in. Eng., V, L Sta. Wgn.	6	1	2208 420			
	w/170 cu. in. Eng., except Sta. Wgn., L	6	1	2401 550			
	w/225 cu. in. Eng., V, L Sta. Wgn.	6	1	2208 440	2534 445		
	w/225 cu. in. Eng., except Sta. Wgn., L	6	1	2401 556			
	w/2 Barrel Carburetor	8	1	2530 050			
	w/1-4 Barrel Carburetor, w/Power Pack, except Sta. Wgn.	8	1	2534 450			
	Police and Taxi, w/Manual Trans., 2 D., 4 D. and Sta. Wgn.	6	1	---- ---	2534 445		
	Police and Taxi, w/Auto. Trans., 2 D., 4 D. and Sta. Wgn.	6	1	---- ---	2409 148		
	w/Auto. Trans., w/Trailer Towing Package	6	1	---- ---	2409 148		
	w/273 cu. in. Eng.	8	1	---- ---	2530 065		
	w/318 cu. in. Eng., P, D	8	1	---- ---	*2530 085	⊟2660 546	
	w/361 cu. in. Eng.	8	1	---- ---	2530 095		
	Except Sta. Wgn.	6	1	---- ---	---- ---	2461 590	
	Sta. Wgn.	6	1	---- ---	---- ---	2460 798	
	w/Auto. Trans., w/Trailer Towing Package, except Sta. Wgn.	6	1	---- ---	---- ---	2530 072	
	w/Auto. Trans., w/Trailer Towing Package, Sta. Wgn.	6	1	---- ---	---- ---	2530 766	
	Police and Taxi, w/Manual Trans., 2 D. and 4 D.	6	1	---- ---	---- ---	2461 590	
	Police and Taxi, w/Auto. Trans., 2 D. and 4 D.	6	1	---- ---	---- ---	2530 072	
	Police, w/Manual Trans., Sta. Wgn.	6	1	---- ---	---- ---	2460 798	
	Police, w/Auto. Trans., Sta. Wgn.	6	1	---- ---	---- ---	2530 766	
	w/383 cu. in. Eng., P, D, C-L, C-M	8	1	---- ---	---- ---	2530 737	
	w/413 cu. in. Eng., D, C-H	8	1	---- ---	---- ---	2530 738	
	Except Cv. Cp.		1	---- ---	---- ---	---- ---	2409 167
	DUAL EXHAUST						
	Right, w/383 cu. in. Eng., P	8	1	---- ---	2208 434	2530 758	
	Left	8	1	---- ---	*2208 432	*2530 756	

TYPE LETTERS Indicate: V - Valiant, L - Dart, R - Belvedere, W - Coronet, P - Plymouth, D - Dodge, C - Chrysler, Y - Imperial

★Indicates use as required. Numerals in parentheses ( ) refer to notes. Printed in U.S.A.

⊟Indicates parts not listed in any previous parts book. Prices and specifications subject to change without notice.

* Indicates change or addition. March 1966 Supersedes May 1965.

MyMopar.com

11-05-0 EXHAUST PIPE - Cont'd

CODE	PART NAME AND DESCRIPTION	CYL	PER CAR	VALIANT / DART	PLYMOUTH BELVEDERE / DODGE CORONET	PLYMOUTH FURY / DODGE POLARA / CHRYSLER	IMPERIAL
	DUAL EXHAUST - Cont'd						
11-05-1	PIPE - Cont'd						
	Right, w/426 cu. in. Eng., Std., P	8	1	---- ---	2460 789	2530 732	
	Left	8	1	---- ---	*2460 787	*2530 730	
	Right, D w/426 cu. in. Eng., C-M w/413 cu. in. Eng., C-P, C-H	8	1	---- ---	---- ---	*2530 732	
	Left	8	1	---- ---	---- ---	*2530 730	
	Right, w/413 cu. in. Eng., Police, 4 D.		1	---- ---	---- ---	*2530 732	
	Left		1	---- ---	---- ---	*2530 730	
	Right, Cv. Cp.		1	---- ---	---- ---	---- ---	1948 166
	Left		1	---- ---	---- ---	---- ---	*2265 975
	SINGLE EXHAUST						
11-05-4	PIPE, Exhaust Extension, w/2 Barrel Carburetor, V, L Sta. Wgn.	8	1	2460 837			
	w/2 Barrel Carburetor, except Sta. Wgn., L	8	1	2460 838			
	w/1-4 Barrel Carburetor, w/Power Pack, except Sta. Wgn., V	8	1	*2660 538			
	w/1-4 Barrel Carburetor, w/Power Pack, except Sta. Wgn., L	8	1	*2660 539			
	w/273 and 318 cu. in. Eng.	8	1	---- ---	2203 563		
	w/361 cu. in. Eng.	8	1	---- ---	2266 046		
	w/318 cu. in. Eng., except Sta. Wgn., P, D	8	1	---- ---	---- ---	2460 757	
	w/318 cu. in. Eng., Sta. Wgn., P, D	8	1	---- ---	---- ---	2530 064	
	w/383 cu. in. Eng., except Sta. Wgn., P	8	1	---- ---	---- ---	2460 774	
	w/383 cu. in. Eng., Sta. Wgn., P, D, C-L	8	1	---- ---	---- ---	2460 772	
	w/383 cu. in. Eng., except Sta. Wgn., C-L, C-M	8	1	---- ---	---- ---	2460 770	
	w/413 cu. in. Eng., D, C-H Sta. Wgn.	8	1	---- ---	---- ---	2530 100	
	Except Sta. Wgn., C-H	8	1	---- ---	---- ---	2461 554	
	Intermediate, except Cv. Cp.		1	---- ---	---- ---	---- ---	2530 771
	Except Cv. Cp.		1	---- ---	---- ---	---- ---	2530 770
	DUAL EXHAUST						
	Right, w/383 and 426 cu. in. Eng., except Sta. Wgn., P	8	1	---- ---	---- ---	2460 774	
	Left	8	1	---- ---	---- ---	*2530 753	
	Right, w/383 and 426 cu. in. Eng., Sta. Wgn., P	8	1	---- ---	---- ---	2460 772	
	Left	8	1	---- ---	---- ---	*2530 754	
	Right, w/426 cu. in. Eng., D	8	1	---- ---	---- ---	*2460 772	
	Left	8	1	---- ---	---- ---	*2530 754	
	Right, w/413 cu. in. Eng., Police, 4 D., D		1	---- ---	---- ---	*2460 772	
	Left		1	---- ---	---- ---	*2530 754	
	Right, w/413 cu. in. Eng., C-M, C-P, C-H	8	1	---- ---	---- ---	2460 770	
	Left	8	1	---- ---	---- ---	*2530 755	
	Front, Right, Cv. Cp.		1	---- ---	---- ---	---- ---	1948 173
	Front, Left		1	---- ---	---- ---	---- ---	*2265 977
11-05-12	FLANGE, Muffler Exhaust Extension Pipe.						
	Ball Joint, D w/426 cu. in. Eng., C-H		1	---- ---	---- ---	*1946 639	
	w/383 cu. in. Eng., P, D, C-L, C-M	8	1	---- ---	---- ---	*1946 638	
		8	1	---- ---	---- ---	*1946 638	
	Except Cv. Cp.		1	---- ---	---- ---	---- ---	1946 639
	Cv. Cp.		2	---- ---	---- ---	---- ---	1946 637

TYPE LETTERS Indicate: V - Valiant, L - Dart, R - Belvedere, W - Coronet, P - Plymouth, D - Dodge, C - Chrysler, Y - Imperial

★Indicates use as required. Numerals in parentheses ( ) refer to notes. Printed in U.S.A.

⊟Indicates parts not listed in any previous parts book. Prices and specifications subject to change without notice.

March 1966 Supersedes May 1965. * Indicates change or addition.

MyMopar.com

CODE	PART NAME AND DESCRIPTION	CYL	PER CAR	VALIANT / DART	PLYMOUTH BELVEDERE / DODGE CORONET	PLYMOUTH FURY / DODGE POLARA / CHRYSLER	IMPERIAL
11-06-0	**EXHAUST PIPE FLANGE GASKET AND STUD**						
11-06-3	NUT, Exhaust Pipe Flange	6	2	6024 343	*6024 343	6024 343	
	NUT, Muffler Exhaust Extension Pipe Ball Joint Flange	8	★	---- ---	---- ---	1946 648	1946 648
11-06-8	GASKET, Exhaust Pipe Flange	6	1	2465 391	2465 391	2465 391	
	w/318 cu. in. Eng., P, D	8	2	---- ---	1636 570	1636 570	
	w/361 and 383 cu. in. Eng.	8	2	---- ---	2465 391		
	w/426 cu. in. Eng., Std.	8	2	---- ---	2465 391		
	Right, except Sta. Wgn., w/426 cu. in. Eng.	8	1	---- ---	*2461 549		
	Left	8	1	---- ---	*2530 120		
	Cover, except Sta. Wgn., w/426 cu. in. Eng.	8	2	---- ---	*2401 577		
	P w/383 and 426 cu. in. Eng., D w/383, 413 and 426 cu. in. Eng., C-L w/383 cu. in. Eng., C-M w/383 and 413 cu. in. Eng., C-P, C-H	8	2	---- ---	---- ---	2465 391	
			2	---- ---	---- ---	---- ---	2465 391
11-06-10	COVER, Exhaust Pipe Flange, w/426 cu. in. Eng., Hemispherical, except Sta. Wgn.	8	2	---- ---	2404 941		
11-08-0	**EXHAUST PIPE SUPPORT AND CLAMP**						
11-08-5	BRACE, Exhaust Pipe, Police and Taxi, w/Manual Trans., 2 D., 4 D. and Sta. Wgn.	6	1	---- ---	2534 448		
	Police and Taxi, w/Auto. Trans., 2 D., 4 D. and Sta. Wgn.	6	1	---- ---	2409 155		
	w/Auto. Trans., w/Trailer Towing Package	6	1	---- ---	2409 155		
	Police and Taxi, 2 D., 4 D. and Sta. Wgn.	6	1	---- ---	---- ---	2530 790	
11-08-24	CLAMP, Exhaust Extension Pipe Saddle, w/2 Barrel Carburetor	8	1	2460 762			
	w/273 and 318 cu. in. Eng.	8	1	---- ---	2460 762		
	w/318 cu. in. Eng., P, D	8	1	---- ---	---- ---	2530 081	
11-09-0	**TAIL PIPE**						
	SINGLE EXHAUST						
11-09-3	PIPE, Tail, except Sta. Wgn.	6	1	2460 833	2404 921	2530 061	
	Sta. Wgn.	6	1	2460 834	2203 579	*2781 258	
	w/2 Barrel Carburetor, except Sta. Wgn.	8	1	2461 570			
	w/2 Barrel Carburetor, Sta Wgn.	8	1	2461 571			
	w/1-4 Barrel Carburetor, w/Power Pack, except Sta. Wgn.	8	1	*2660 543			
	w/Auto. Trans., w/Trailer Towing Package, except Sta. Wgn.	6	1	---- ---	2404 921	2530 061	
	w/Auto. Trans., w/Trailer Towing Package, Sta. Wgn.	6	1	---- ---	2203 579	2461 599	
	Police and Taxi, 2 D. and 4 D.	6	1	---- ---	2404 921	2530 061	
	Police, Sta. Wgn.	6	1	---- ---	2203 579	2461 599	
	w/273, 318 and 361 cu. in. Eng., except Sta. Wgn.	8	1	---- ---	2404 923		
	w/273, 318 and 361 cu. in. Eng., Sta. Wgn.	8	1	---- ---	2203 583		
	w/318 and 383 cu. in. Eng., except Sta. Wgn., P	8	1	---- ---	---- ---	2530 070	
	w/318 and 383 cu. in. Eng., Sta. Wgn., P	8	1	---- ---	---- ---	*2781 259	

TYPE LETTERS Indicate: V - Valiant, L - Dart, R - Belvedere, W - Coronet, P - Plymouth, D - Dodge, C - Chrysler, Y - Imperial

★Indicates use as required. Numerals in parentheses ( ) refer to notes. Printed in U.S.A.

⊟Indicates parts not listed in any previous parts book. Prices and specifications subject to change without notice.

• Indicates change or addition.

March 1966 Supersedes May 1965.

MyMopar.com

CODE	PART NAME AND DESCRIPTION	CYL	PER CAR	VALIANT / DART	PLYMOUTH BELVEDERE / DODGE CORONET	PLYMOUTH FURY / DODGE POLARA / CHRYSLER	IMPERIAL
11-09-0	**TAIL PIPE - Cont'd**						
	SINGLE EXHAUST - Cont'd						
11-09-3	PIPE - Cont'd						
	w/318 cu. in. Eng., except Sta. Wgn., D	8	1	---- ---	---- ---	2530 070	
	w/318 cu. in. Eng., Sta. Wgn., D	8	1	---- ---	---- ---	*2781 259	
	w/383 cu. in. Eng., Sta. Wgn., D, C-L	8	1	---- ---	---- ---	*2781 259	
	Front, w/413 cu. in. Eng., except Sta. Wgn., D, C-H	8	1	---- ---	---- ---	2461 557	
	Front, w/413 cu. in. Eng., Sta. Wgn., D, C-H	8	1	---- ---	---- ---	2460 780	
	Rear, w/413 cu. in. Eng., Sta. Wgn., D, C-H	8	1	---- ---	---- ---	2460 781	
	Front, except Cv. Cp., 2" Dia.		1	---- ---	---- ---	---- ---	2265 965
	Front, except Cv. Cp., 2 1/4" Dia.		1	---- ---	---- ---	---- ---	2660 429
	DUAL EXHAUST						
	Right, w/383 cu. in Eng., except Sta. Wgn.	8	1	---- ---	2404 924		
	Left	8	1	---- ---	*2404 923		
	Right, w/383 cu. in. Eng., Sta. Wgn.	8	1	---- ---	2203 584		
	Left	8	1	---- ---	*2203 583		
	Right, w/426 cu. in. Eng., Std., except Sta. Wgn.	8	1	---- ---	2404 924		
	Left	8	1	---- ---	*2404 923		
	Right, w/426 cu. in. Eng., Std., Sta. Wgn.	8	1	---- ---	2203 584		
	Left	8	1	---- ---	*2203 583		
	Right, except Sta. Wgn., P w/383 and 426 cu. in. Eng., D w/426 cu. in. Eng., C-M w/413 cu. in. Eng., C-P, C-H	8	1	---- ---	---- ---	*2643 599	
	Left	8	1	---- ---	---- ---	*2643 598	
	Right, w/413 cu. in. Eng., Police, 4 D., D		1	---- ---	---- ---	*2643 599	
	Left		1	---- ---	---- ---	*2643 598	
	Right, Sta. Wgn., P w/383 and 426 cu. in. Eng., D w/426 cu. in. Eng., C-H	8	1	---- ---	---- ---	*2781 259	
	Left	8	1	---- ---	---- ---	*2781 260	
	Right, Cv. Cp.		1	---- ---	---- ---	---- ---	2530 079
	Left		1	---- ---	---- ---	---- ---	*2530 078
	Intermediate, Right, Cv. Cp.		1	---- ---	---- ---	---- ---	1948 267
	Intermediate, Left		1	---- ---	---- ---	---- ---	*1948 266
11-10-0	**TAIL PIPE SUPPORT**						
	SINGLE EXHAUST						
11-10-2	SUPPORT, INSULATOR and PLATE PACKAGE, Tail Pipe Rear, w/Power Pack, w/1-4 Barrel Carburetor, except Sta. Wgn.	8	1	2585 358			
11-10-3	SUPPORT and INSULATOR, Front	6	1	2460 845	2203 677	2530 091	
	w/2 Barrel Carburetor	8	1	2461 574			
	w/1-4 Barrel Carburetor, w/Power Pack, except Sta. Wgn.	8	1	2534 460			
	Rear	6	1	2073 794			
	w/2 Barrel Carburetor	8	1	2073 794			
	Front	8	1	---- ---	2203 965	2530 093	
	Rear, except Sta. Wgn.		1	---- ---	2401 562	2530 062	
	Rear, Sta. Wgn.		1	---- ---	2203 915	*2781 254	
	Front, except Cv. Cp.		1	---- ---	---- ---	⊟2643 536	
	Rear, except Cv. Cp.		1	---- ---	---- ---	---- ---	2265 972
	SCREW, Tail Pipe Support to Body, Rear	6	1	6024 834			
	SCREW, Tail Pipe Support to Body, Rear, w/2 Barrel Carburetor	8	1	6024 834			

TYPE LETTERS Indicate: V - Valiant, L - Dart, R - Belvedere, W - Coronet, P - Plymouth, D - Dodge, C - Chrysler, Y - Imperial

★Indicates use as required. Numerals in parentheses ( ) refer to notes. Printed in U.S.A.

⊟Indicates parts not listed in any previous parts book. Prices and specifications subject to change without notice.

March 1966 Supersedes May 1965. * Indicates change or addition.

MyMopar.com

11-10-0 TAIL PIPE SUPPORT - Cont'd

DUAL EXHAUST

CODE	PART NAME AND DESCRIPTION	CYL	PER CAR	VALIANT / DART	PLYMOUTH BELVEDERE / DODGE CORONET	PLYMOUTH FURY / DODGE POLARA / CHRYSLER	IMPERIAL
11-10-3	SUPPORT and INSULATOR - Cont'd						
	Front, Right, w/383 cu. in. Eng.	8	1	---- ---	2203 966		
	Front, Left	8	1	---- ---	*2203 965		
	Front, Right, w/426 cu. in. Eng., Std.	8	1	---- ---	2203 966		
	Front, Left	8	1	---- ---	*2203 965		
	Rear, except Sta. Wgn., w/383 and 426 cu. in. Eng.	8	2	---- ---	2401 562		
	Rear, Right, Sta. Wgn., w/383 cu. in. Eng.	8	1	---- ---	2203 916		
	cu. in. Eng.	8	1	---- ---	2203 915		
	Rear, Right, Sta. Wgn., w/426 cu. in. Eng., Std.	8	1	---- ---	2203 916		
	Rear, Left, Sta. Wgn., w/426 cu. in. Eng., Std.	8	1	---- ---	2203 915		
	Front, P w/383 and 426 cu. in. Eng., D w/413 and 426 cu. in. Eng., C-M w/413 cu. in. Eng., C-P, C-H	8	2	---- ---	---- ---	*2404 929	
	Rear, except Sta. Wgn., P w/383 and 426 cu. in. Eng., D w/413 and 426 cu. in. Eng., C-M w/413 cu. in. Eng., C-P, C-H	8	2	---- ---	---- ---	2530 740	
	Rear, Right, Sta. Wgn., P w/383 amd 426 cu. in. Eng., D w/413 and 426 cu. in. Eng., C-H	8	1	---- ---	---- ---	*2781 254	
	Rear, Left	8	1	---- ---	---- ---	*2781 255	
	Front, Cv. Cp.		2	---- ---	---- ---	---- ---	2123 456
	Rear, Cv. Cp.		2	---- ---	---- ---	---- ---	2265 972
11-10-17	SCREW, Rear Support Clamp		★	6024 323	6024 323	6024 323	6024 323
	U-BOLT, Front Support Clamp	6	★	2073 812	2203 968	2203 968	
		8	★	2203 968	2203 968	2203 968	2203 968
11-10-18	NUT, U-Bolt		★	2073 205	2073 205	2073 205	2073 205
			★	6022 838	6022 838	6022 838	6022 838
11-10-20	PLATE, Tail Pipe Front Support Floor Pan, Right	8	1	---- ---	2203 905		
11-10-26	WASHER, Insulator		★	---- ---	688 900	688 900	688 900
11-10-42	HANGER, Tail Pipe Rear Support to Body	6	1	2073 797			
	w/2 Barrel Carburetor	8	1	2073 797			
	Sta. Wgn.		1	---- ---	2073 797		
	BRACKET, Center Floor Tail Pipe Support		1	---- ---	2251 717	2483 842	
	Tail Pipe Front Support Floor Pan, Right	8	1	---- ---	2203 924		
	w/Brake Tube Bracket, Front Support		1	---- ---	---- ---	---- ---	2201 403
	w/o Brake Tube Bracket, Front Support, Cv. Cp.		1	---- ---	---- ---	---- ---	*2123 395-6
11-10-43	SUPPORT, Rear Floor Pan Tail Pipe Hanger Bracket		1	2243 972			

TYPE LETTERS Indicate: V - Valiant, L - Dart, R - Belvedere, W - Coronet, P - Plymouth, D - Dodge, C - Chrysler, Y - Imperial

★Indicates use as required. Numerals in parentheses ( ) refer to notes. Printed in U.S.A.
⊟Indicates parts not listed in any previous parts book. Prices and specifications subject to change without notice.
* Indicates change or addition. March 1966 Supersedes May 1965.

MyMopar.com

CODE	PART NAME AND DESCRIPTION	CYL	PER CAR	VALIANT	PLYMOUTH BELVEDERE	PLYMOUTH FURY	IMPERIAL
				DART	DODGE CORONET	DODGE POLARA	
						CHRYSLER	

NOTES

TYPE LETTERS Indicate: V - Valiant, L - Dart, R - Belvedere, W - Coronet, P - Plymouth, D - Dodge, C - Chrysler, Y - Imperial

★Indicates use as required. Numerals in parentheses ( ) refer to notes. Printed in U.S.A.

⊟Indicates parts not listed in any previous parts book. Prices and specifications subject to change without notice.

May 1965 Supersedes Oct. 15, 1964. • Indicates change or addition.

MyMopar.com

GROUP 12 - FENDERS AND SHEET METAL

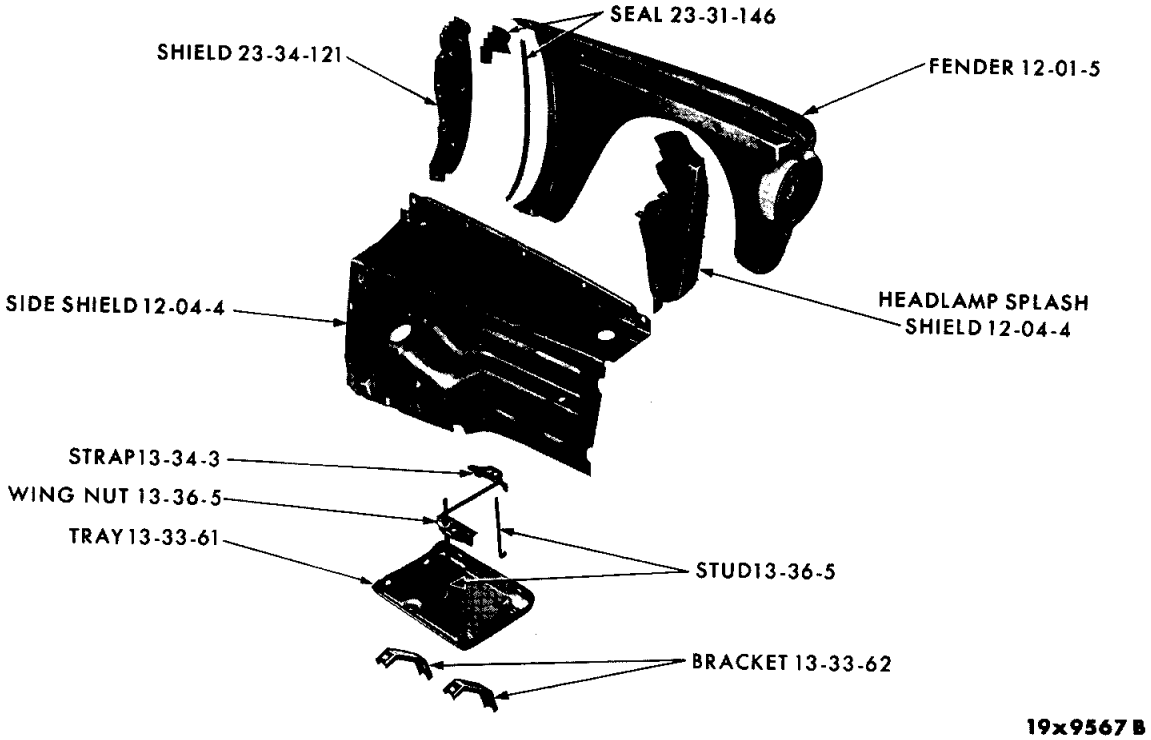

FRONT FENDER - VALIANT

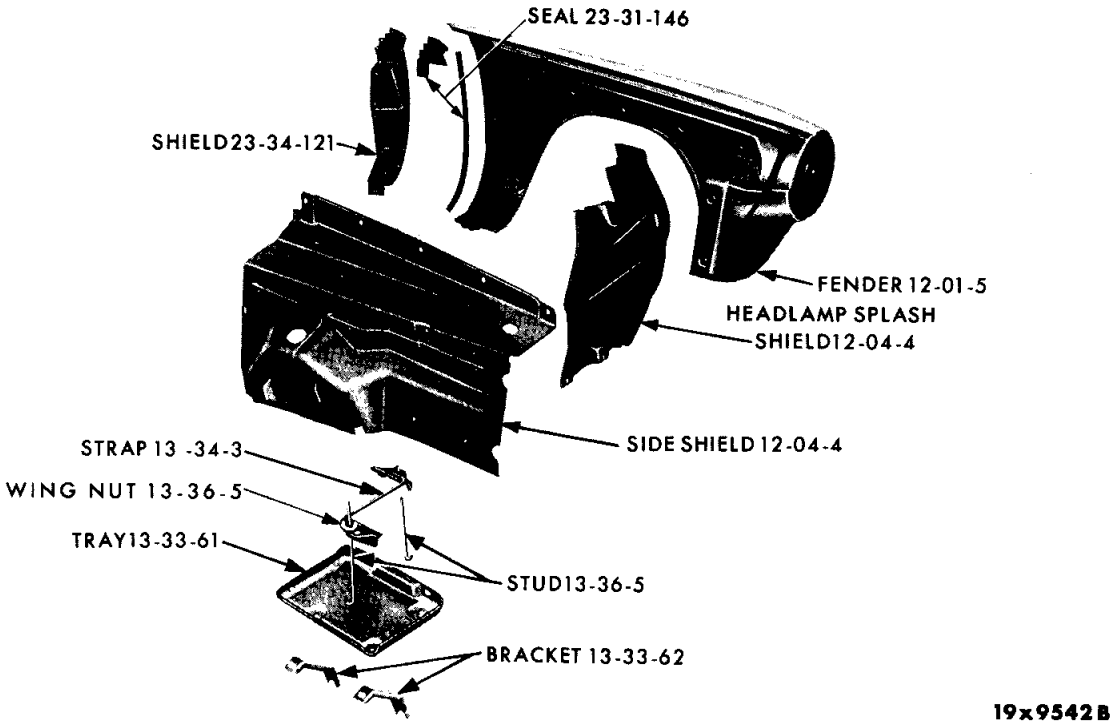

FRONT FENDER - DART

MyMopar.com

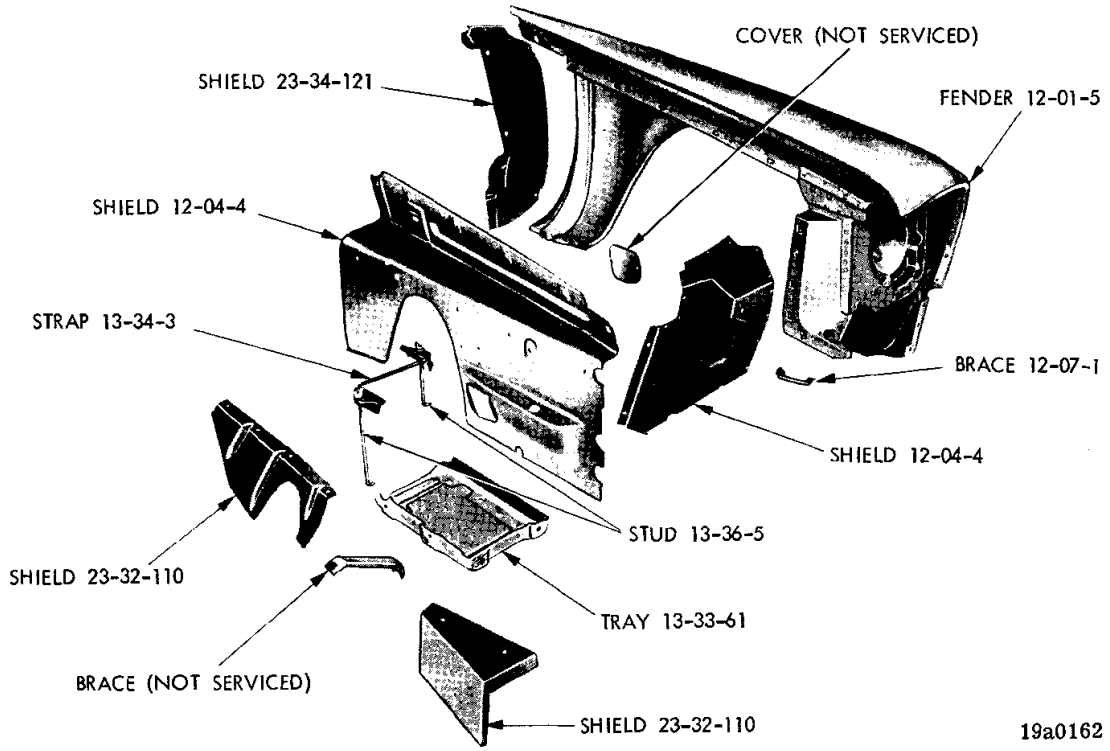

FRONT FENDER - BELVEDERE

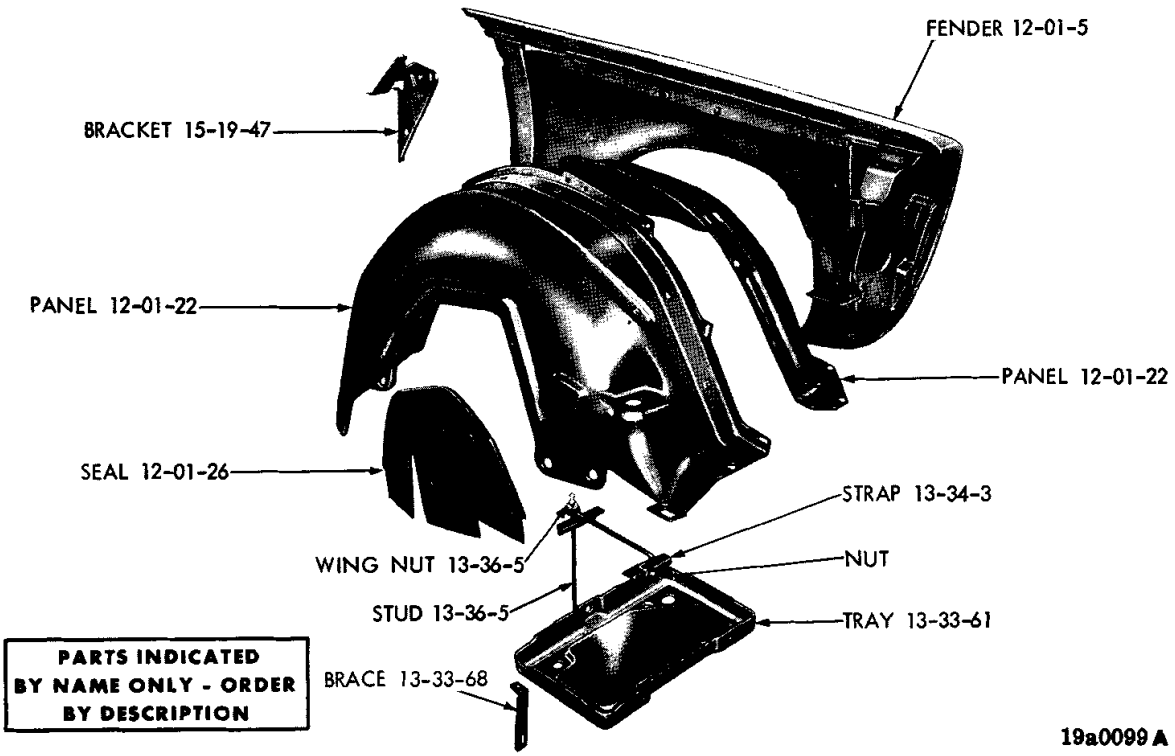

FRONT FENDER - PLYMOUTH

MyMopar.com

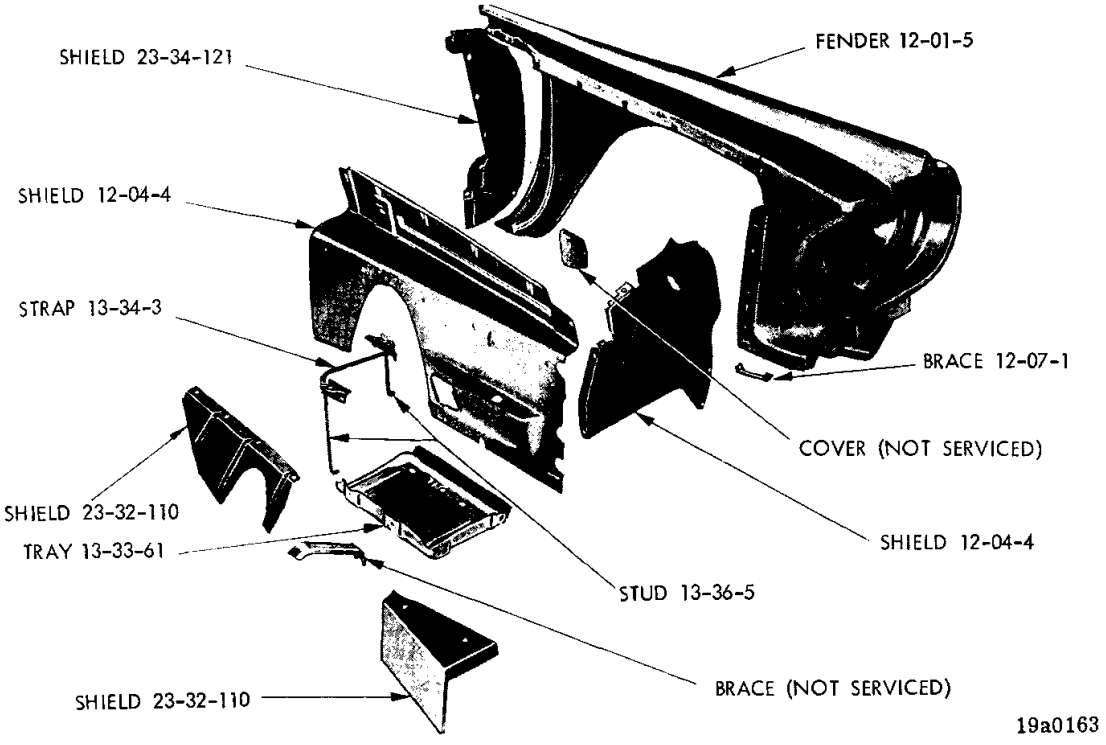

FRONT FENDER - CORONET

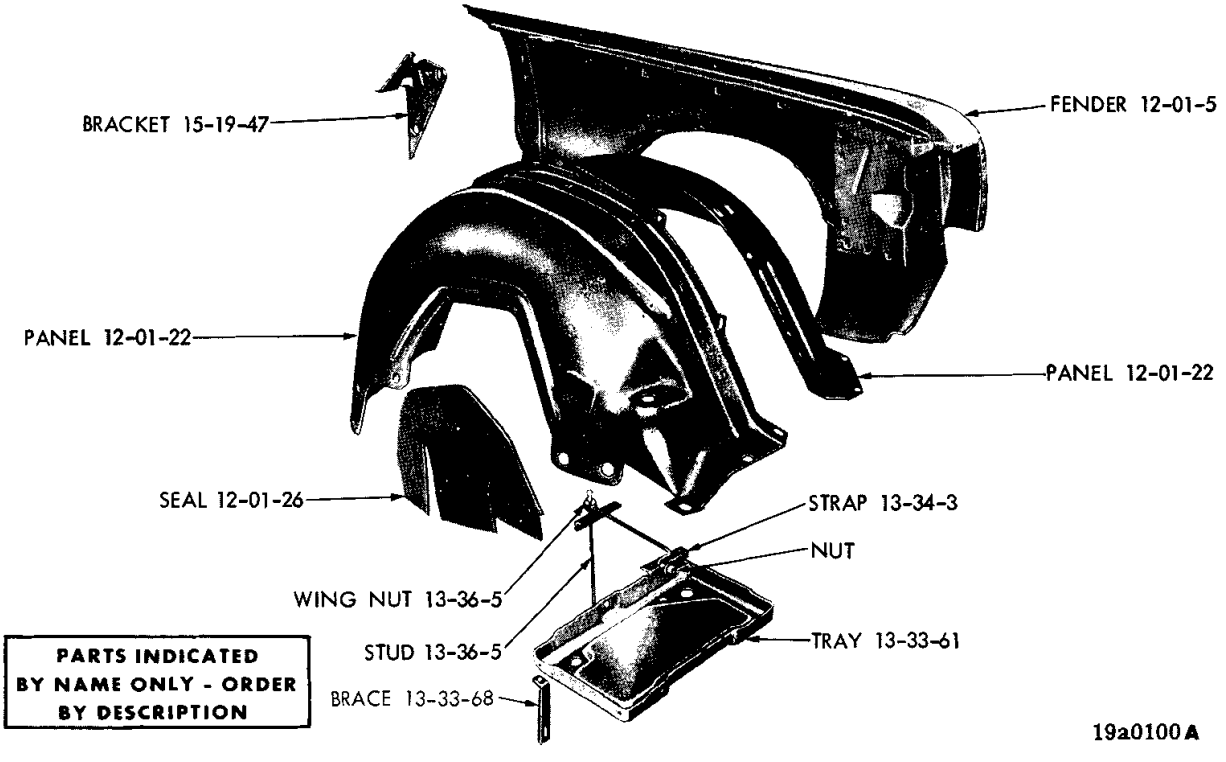

FRONT FENDER - DODGE

MyMopar.com

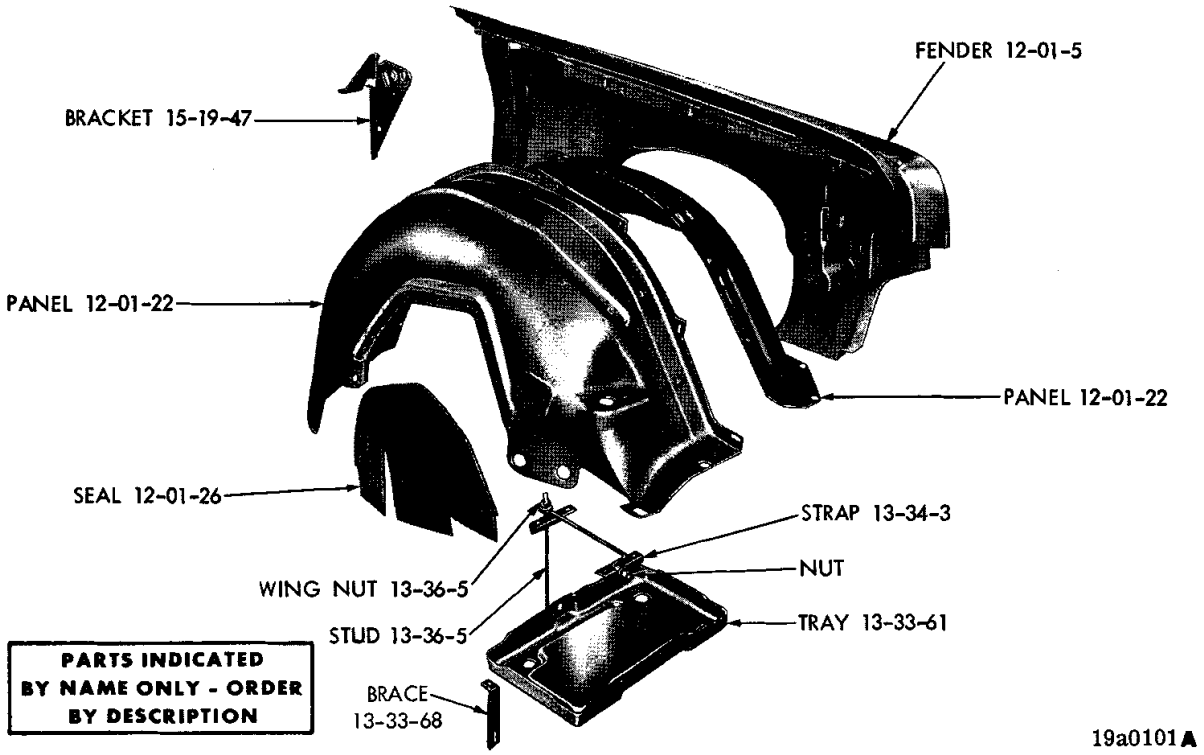

FRONT FENDER - CHRYSLER

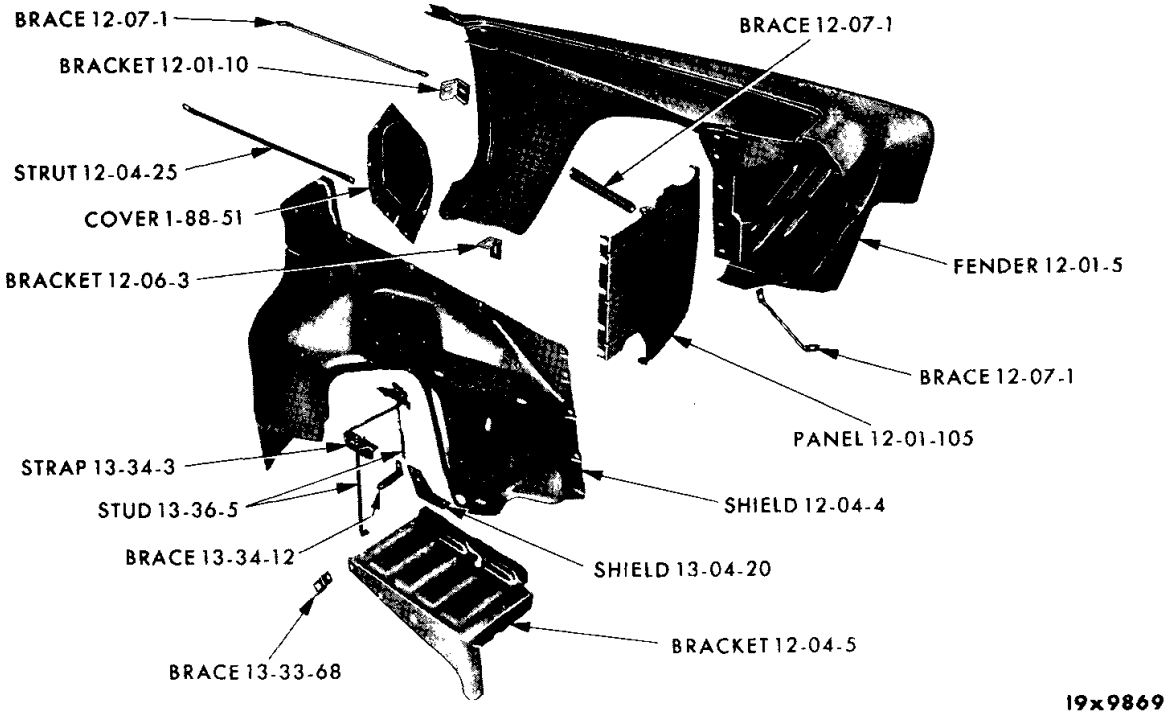

FRONT FENDER - IMPERIAL

MyMopar.com

CODE	PART NAME AND DESCRIPTION	CYL	PER CAR	VALIANT / DART	PLYMOUTH BELVEDERE / DODGE CORONET	PLYMOUTH FURY / DODGE POLARA / CHRYSLER	IMPERIAL
12-01-0	**FRONT FENDERS**						
12-01-5	FENDER, Front, V, R		1	2493 906-7	2525 856-7		
	L, W, P		1	2493 926-7	2525 858-9	2525 860-1	
	D2	8	1	---- ---	---- ---	2525 862-3	
	C1, C2, C3	8	1	---- ---	---- ---	2525 864-5	2425 684-5
	AR2, w/426 cu. in. Eng., Hemispherical	8	1	---- ---	⊟2416 885-6		
	AW2, Right, w/426 cu. in. Eng., Hemispherical	8	1	---- ---	⊟2416 888		
	AW2, Left, w/426 cu. in. Eng., Hemispherical	8	1	---- ---	⊟2416 887		
12-01-10	BRACKET, Fender to Pillar	8	2	---- ---	---- ---	---- ---	1686 914
12-01-22	PANEL, Front Fender Wheelhouse						
	Right, Inner		1	---- ---	---- ---	2461 794	
	Left, Inner		1	---- ---	---- ---	2530 977	
	Outer, P		1	---- ---	---- ---	2461 782-3	
	Outer, D, C	8	1	---- ---	---- ---	2461 778-9	
12-01-26	SEAL, Fender Wheelhouse Inner Panel to Upper Control Arm, Right, P	6	1	---- ---	---- ---	2530 982	
	Left, P	6	1	---- ---	---- ---	2530 290	
	P, D, C	8	2	---- ---	---- ---	2530 290	
12-01-105	PANEL, Shear	8	1	---- ---	---- ---	---- ---	2417 406-7
12-02-0	**FENDER SEAL OR SHIM**						
12-02-5	SEAL, Shear Panel, Upper	8	1	---- ---	---- ---	---- ---	2417 956
	Side, Inner	8	1	---- ---	---- ---	---- ---	2417 528-9
	Side, Outer	8	2	---- ---	---- ---	---- ---	2445 052
	Fender to Pillar	8	2	---- ---	---- ---	---- ---	2166 641
	SHIM, Fender Flange to Cowl Top		★	6010 031			
	Fender to Pillar Support to Cowl		4	6010 035			
	Fender Cowl Bracket to Cowl		★	---- ---	6010 031		
	Fender Cowl Bracket to Cowl, Front		★	---- ---	2099 784		
	Fender to Pillar Support, Upper Attaching Thin		★	---- ---	---- ---	6010 031	
	Fender to Cowl Attaching		★	---- ---	---- ---	6010 031	
12-02-6	FILLER, Fender Bumper	8	1	---- ---	---- ---	---- ---	2445 590-1
	Grill Fender	8	1	---- ---	---- ---	---- ---	2578 052-3
12-02-10	RETAINER, Fender Bumper Filler, Inner	8	1	---- ---	---- ---	---- ---	2445 826-7
	Outer	8	1	---- ---	---- ---	---- ---	2445 824-5
12-04-0	**FRONT FENDER SHIELD**						
12-04-4	SHIELD, Fender Headlamp Splash, V, R		1	2276 974-5	2524 770-1		
	L, W		1	2276 968-9	2524 766-7		
	Fender Side, Right		1	*2208 598	*2201 526	---- ---	*2461 800
	Left		1	2208 593	2530 981	---- ---	2530 283
12-04-5	BRACKET, Upper Support, w/Battery Tray	8	1	---- ---	---- ---	---- ---	1940 893
12-04-23	SEAL, Fender Headlamp Splash Shield, Upper, V, R		1	2417 154-5	2524 550-1		
	Upper, W		1	---- ---	2524 544-5		
	Side, V, R		1	2417 152-3	2445 532-3		
	Side, W		1	---- ---	2445 568-9		
	Fender Side Shield to Fender	8	2	---- ---	---- ---	---- ---	2405 064
	Fender Side Shield to Upper Control Arm	8	1	---- ---	---- ---	---- ---	2405 688-9

TYPE LETTERS Indicate: V - Valiant, L - Dart, R - Belvedere, W - Coronet, P - Plymouth, D - Dodge, C - Chrysler, Y - Imperial

★Indicates use as required. Numerals in parentheses ( ) refer to notes. Printed in U.S.A.

⊟Indicates parts not listed in any previous parts book. Prices and specifications subject to change without notice.

* Indicates change or addition.

MyMopar.com

CODE	PART NAME AND DESCRIPTION	CYL	PER CAR	VALIANT / DART	PLYMOUTH BELVEDERE / DODGE CORONET	PLYMOUTH FURY / DODGE POLARA / CHRYSLER	IMPERIAL
12-04-0	**FRONT FENDER SHIELD - Cont'd**						
12-04-24	CLIP, Fender Shield Rear Cover except Sta. Wgn.		8	---- ---	2405 049		
	Wheelhouse Panel Seal, P,D,C		22	---- ---	---- ---	2405 049	
	Front Side Rail to Dash Support Seal		4	---- ---	2405 049		
	Front Fender Shield, Rear Cover		8	---- ---	2405 049		
12-04-25	STRUT, Fender Shield to No. 1 Body Dash Brace	8	2	---- ---	---- ---	---- ---	2409 340
12-06-0	**FENDER BRACKET**						
12-06-3	BRACKET, Fender Extension to Cross Bar, R.		2	---- ---	2524 107		
	Radiator Cross Bar Fender, D	8	2	---- ---	---- ---	2578 856	
	C	8	2	---- ---	---- ---	2449 946	1624 582
12-07-0	**FENDER BRACE OR SUPPORT**						
12-07-1	BRACE, Fender to Fender Shield		1	---- ---	2578 604-5		
	Fender to Bumper Support, R		2	---- ---	2579 091		
	W		2	---- ---	2579 094		
	Fender Side Panel Shear Panel	8	1	---- ---	---- ---	---- ---	2524 014-5
	Fender Shield to Fender	8	1	---- ---	---- ---	---- ---	2405 050-1
	Fender Shield to Fender, Lower	8	1	---- ---	---- ---	---- ---	2260 456-7
	Fender to Cowl	8	1	---- ---	---- ---	---- ---	1754 294-5
12-15-0	**FENDER MOULDINGS, NAME PLATES AND ORNAMENTS**						
	NOTE: See Exterior Moulding Illustrations in Front of Group 23 Body.						
12-15-11	PLATE, Fender Side Lower Moulding Tie, D2-H Sta. Wgn.	8	4	---- ---	---- ---	2524 782	
12-15-21	MEDALLION, Fender Side Pentastar, Right Side Only		1	⊟2785 200	⊟2785 200	⊟2785 200	⊟2785 200
	ORNAMENT, Fender Side, Formula S Barracuda		1	*2579 443			
	CLIP		1	6000 050	6000 050	6000 050	6000 050
12-15-32	OVERLAY, Front Fender D-H, Sta. Wgn.	8	2	---- ---	---- ---	*2605 036	

NOTES

TYPE LETTERS Indicate: V - Valiant, L - Dart, R - Belvedere, W - Coronet, P - Plymouth, D - Dodge, C - Chrysler, Y - Imperial

★Indicates use as required. Numerals in parentheses ( ) refer to notes. Printed in U.S.A.

⊟Indicates parts not listed in any previous parts book. Prices and specifications subject to change without notice.

MyMopar.com

* Indicates change or addition.

GROUP 13 - FRAME

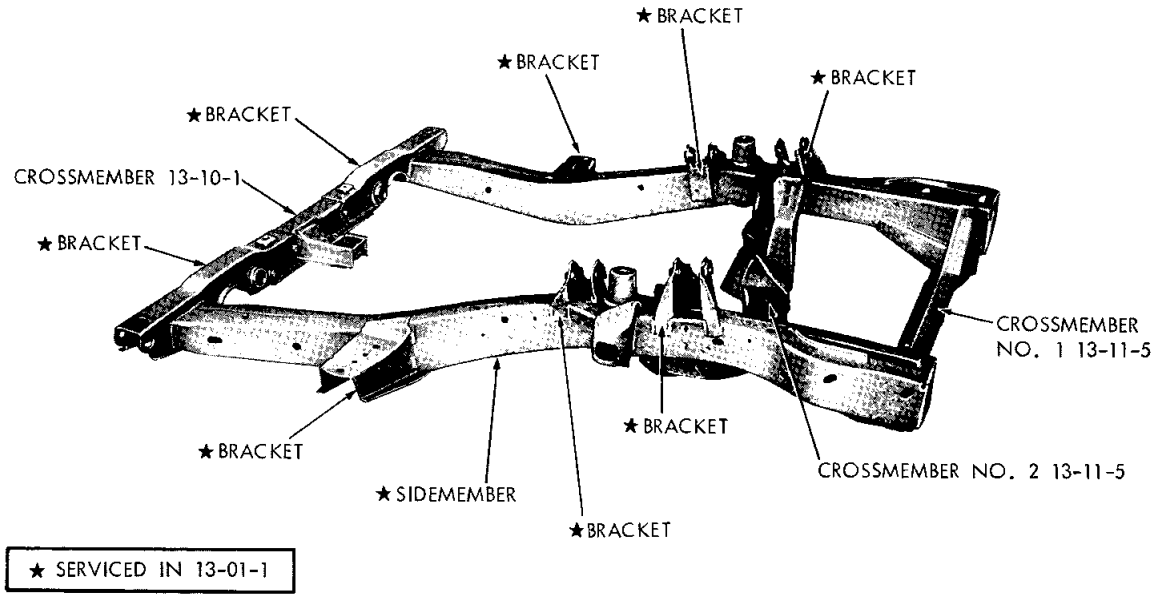

FRAME - PLYMOUTH

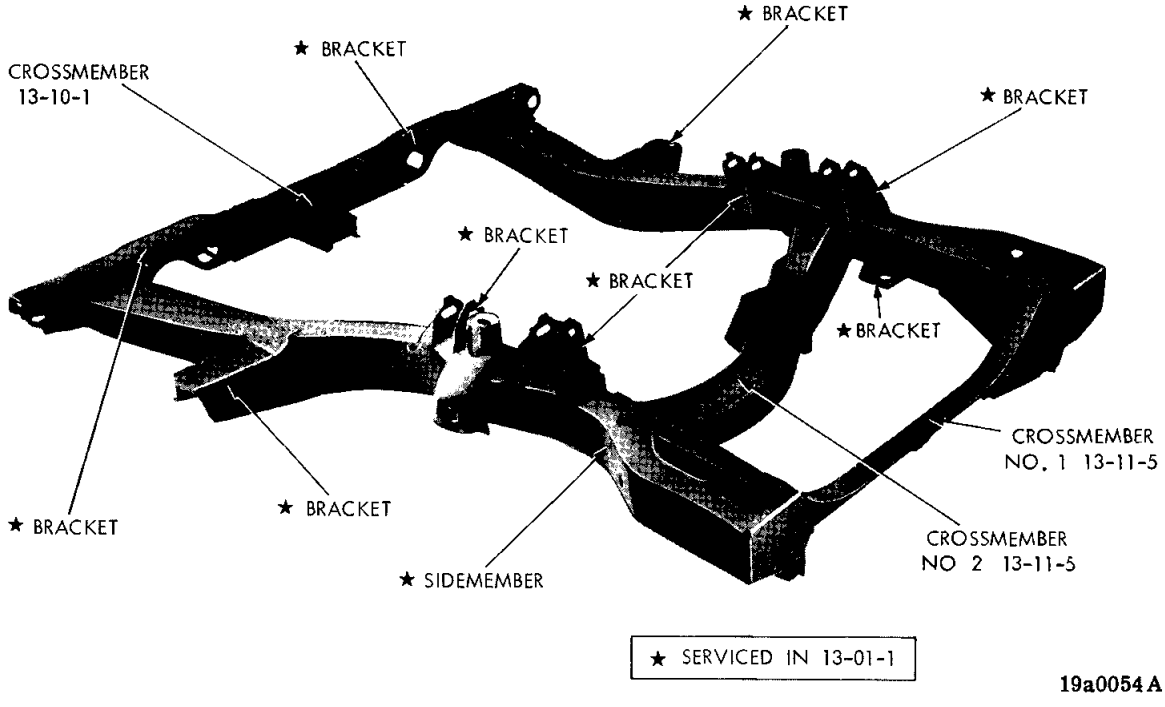

FRAME - DODGE AND CHRYSLER

MyMopar.com

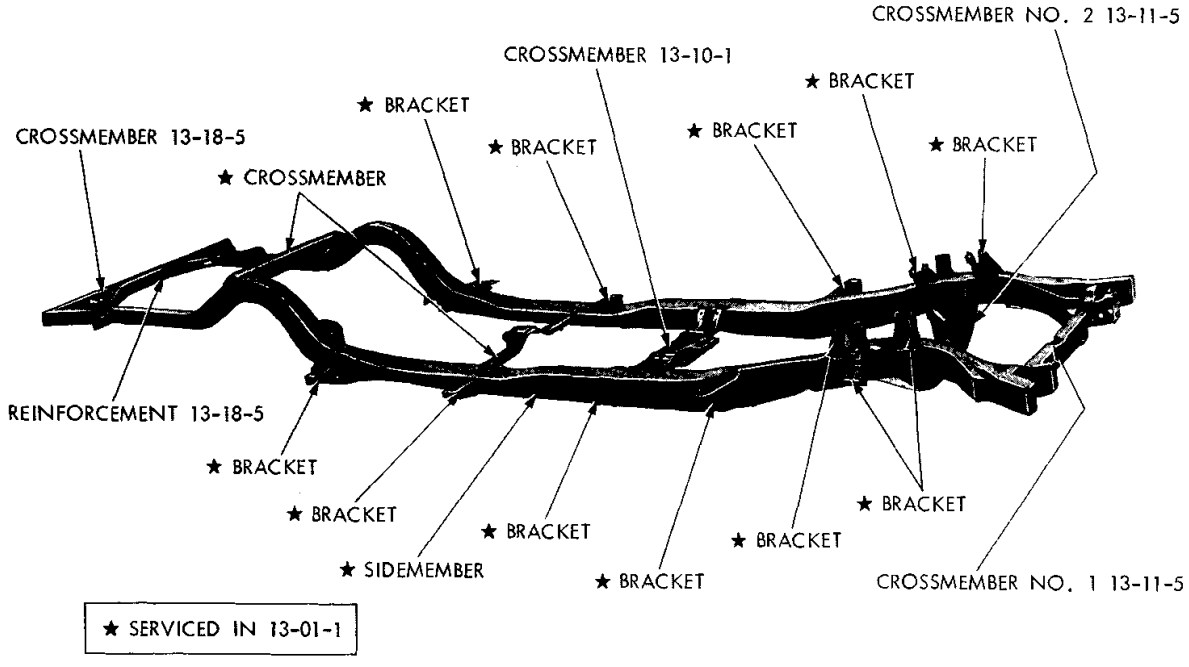

FRAME - IMPERIAL

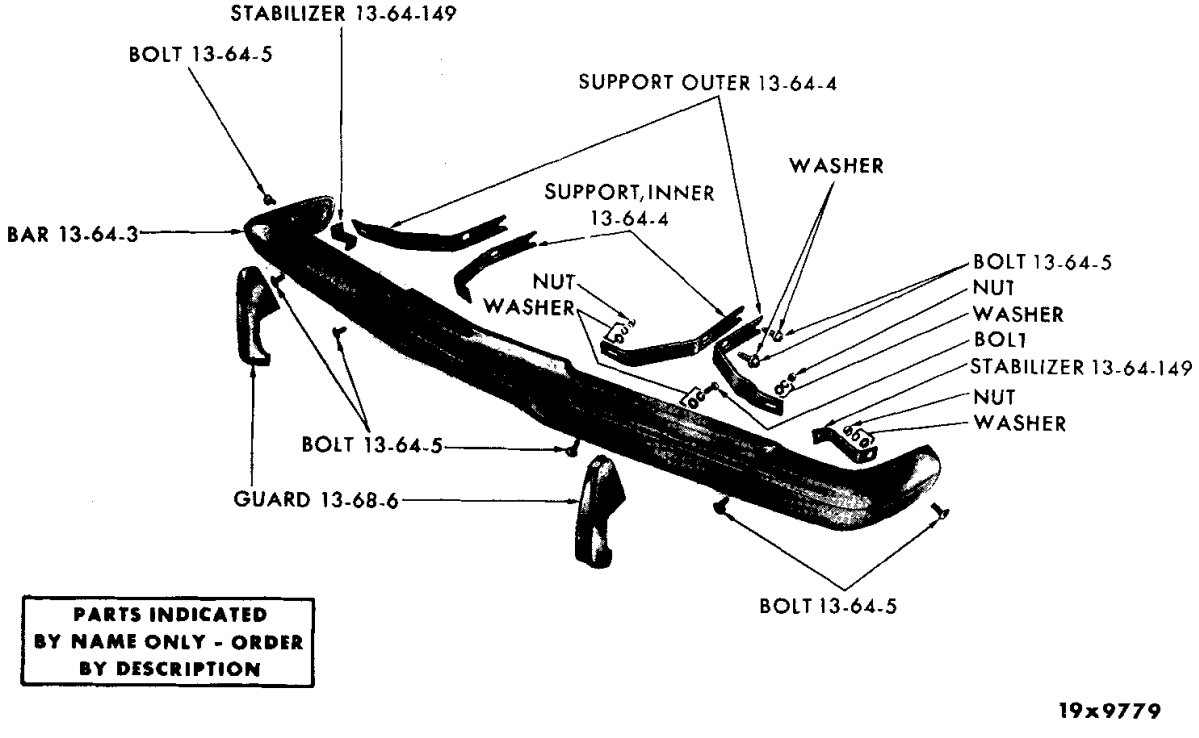

FRONT BUMPER - VALIANT

MyMopar.com

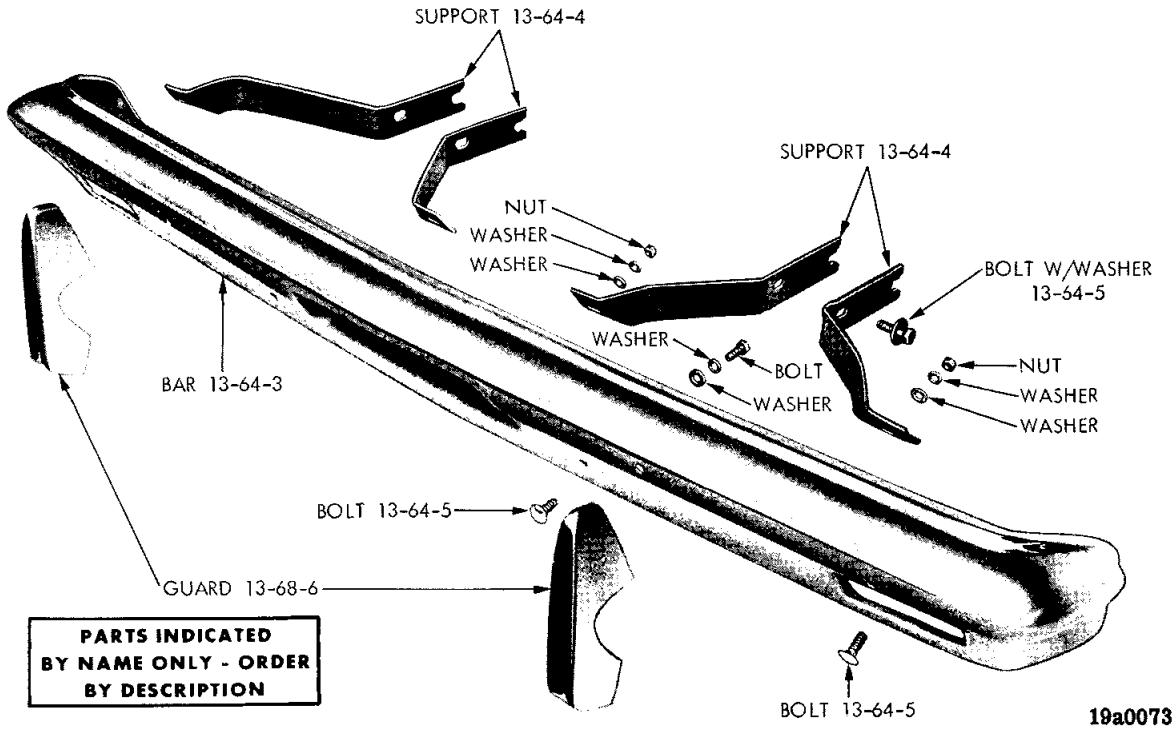

FRONT BUMPER - DART

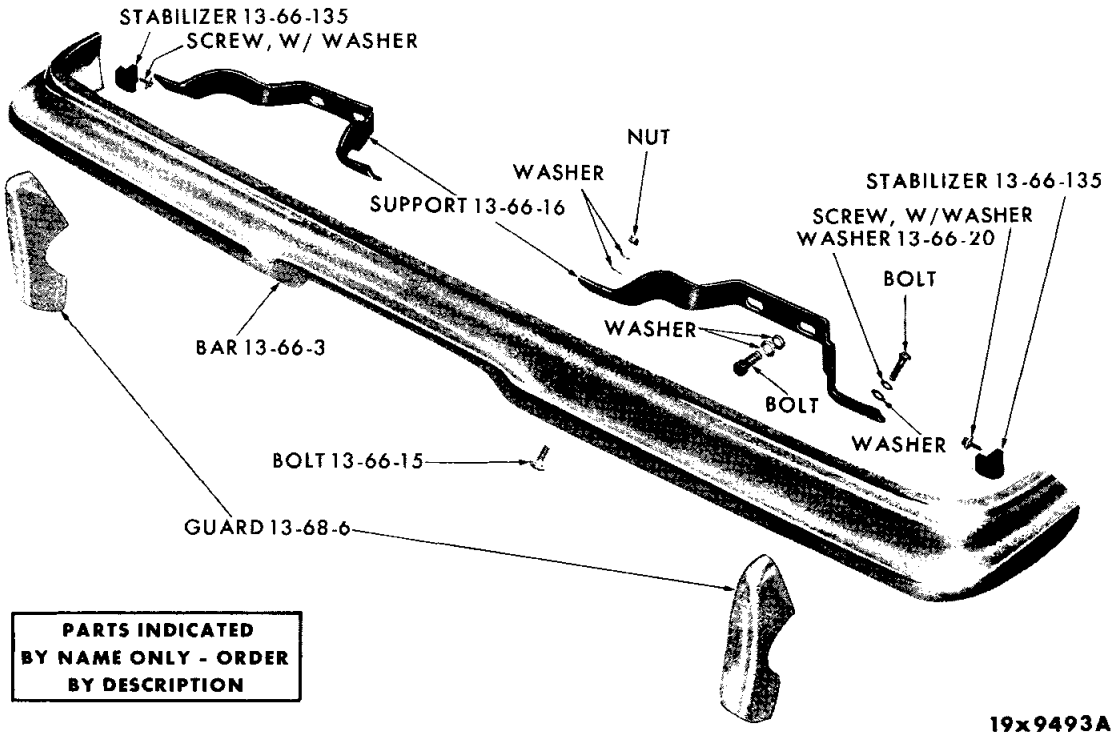

REAR BUMPER - VALIANT (ALL) AND DART (STATION WAGON)

MyMopar.com

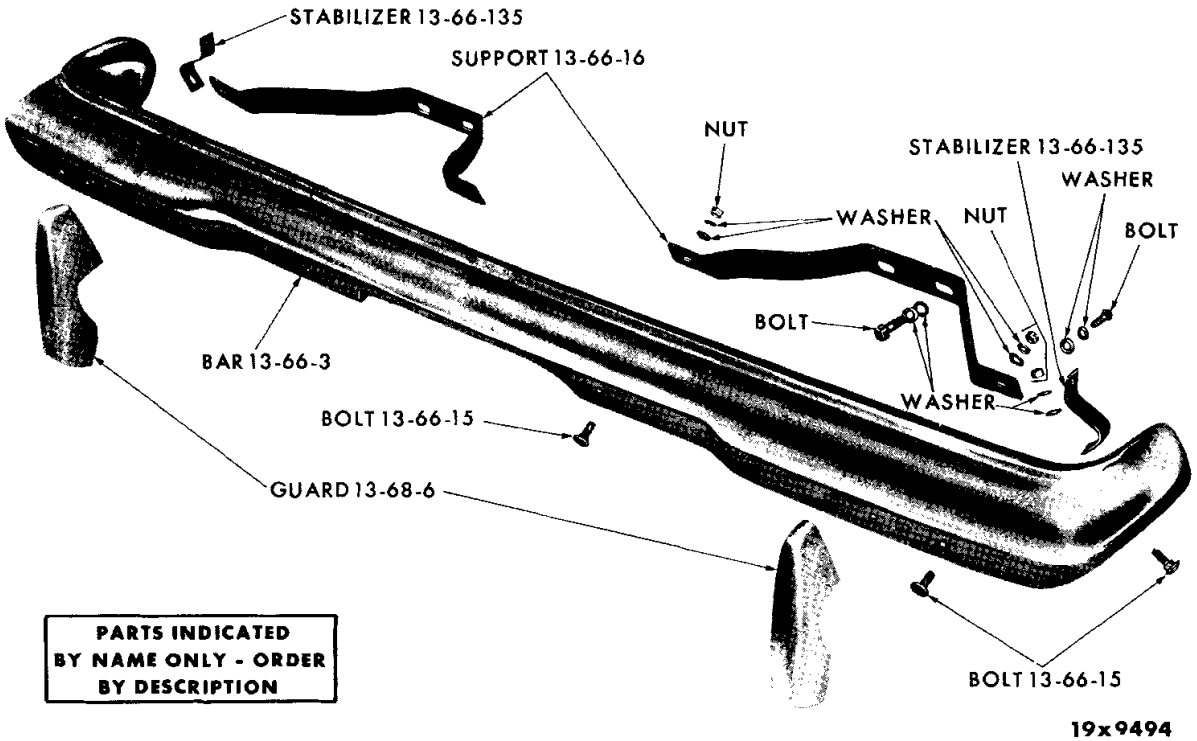

REAR BUMPER - DART (EXCEPT STATION WAGON)

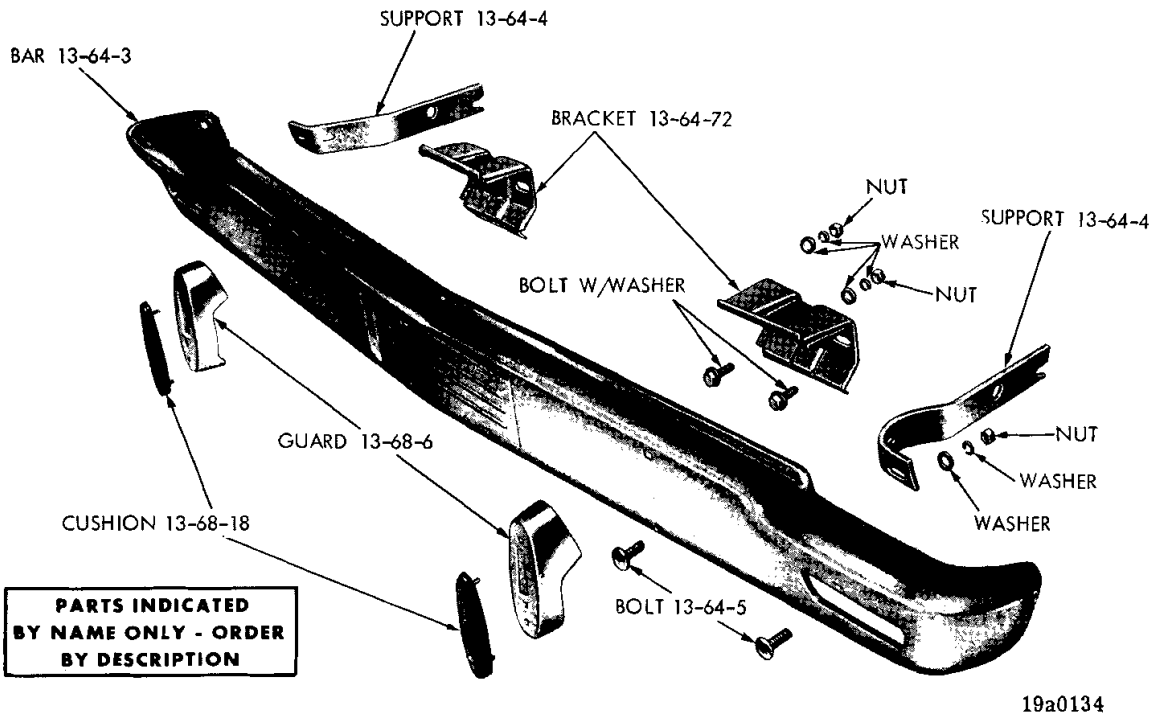

FRONT BUMPER - BELVEDERE

MyMopar.com

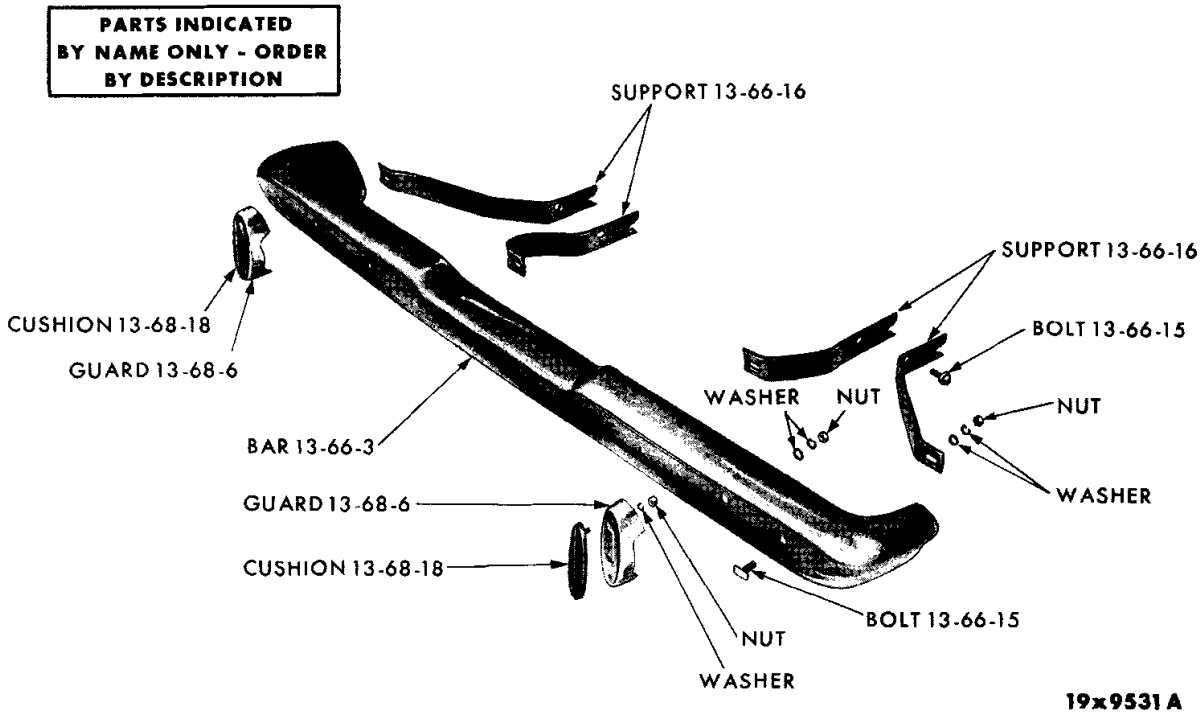

REAR BUMPER - BELVEDERE (EXCEPT STATION WAGON)

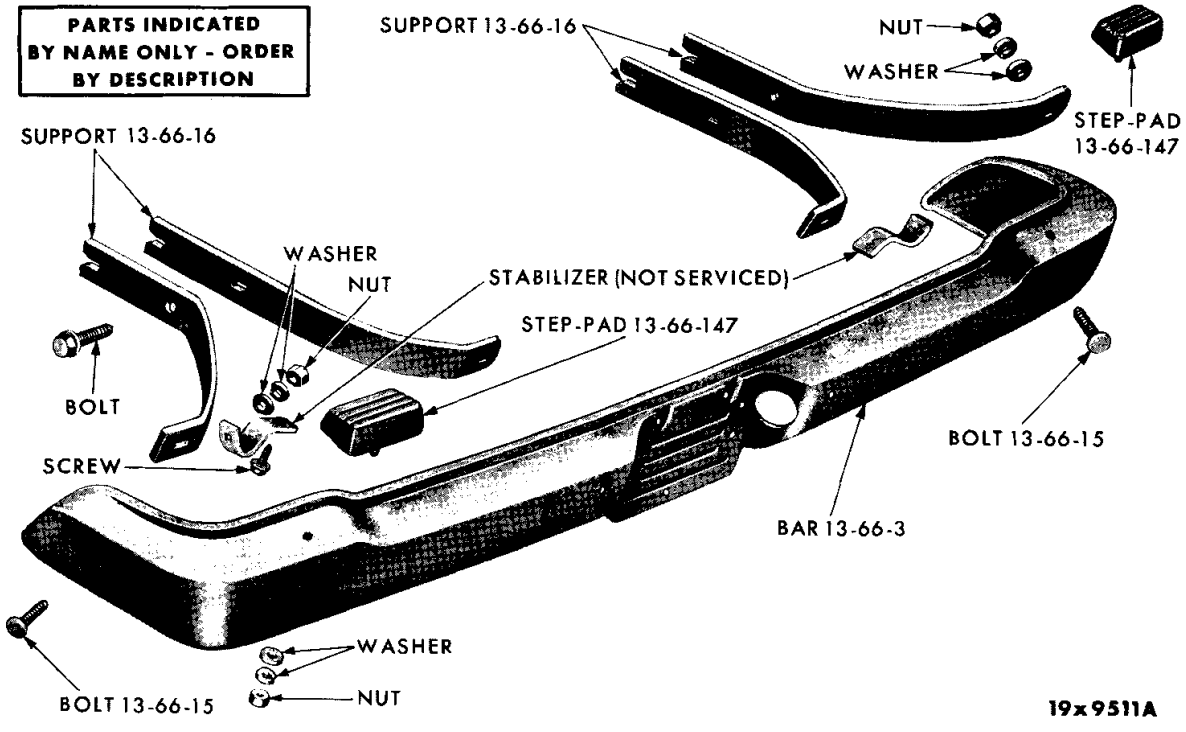

REAR BUMPER - BELVEDERE AND CORONET (STATION WAGON)

MyMopar.com

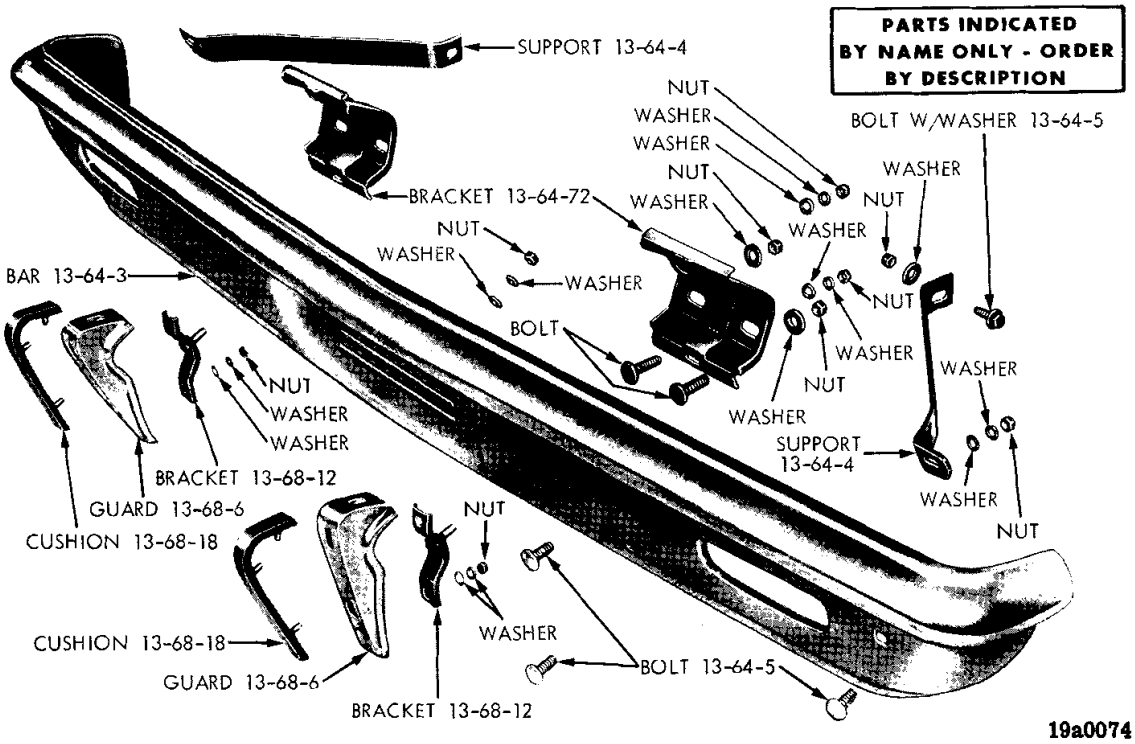

FRONT BUMPER - CORONET

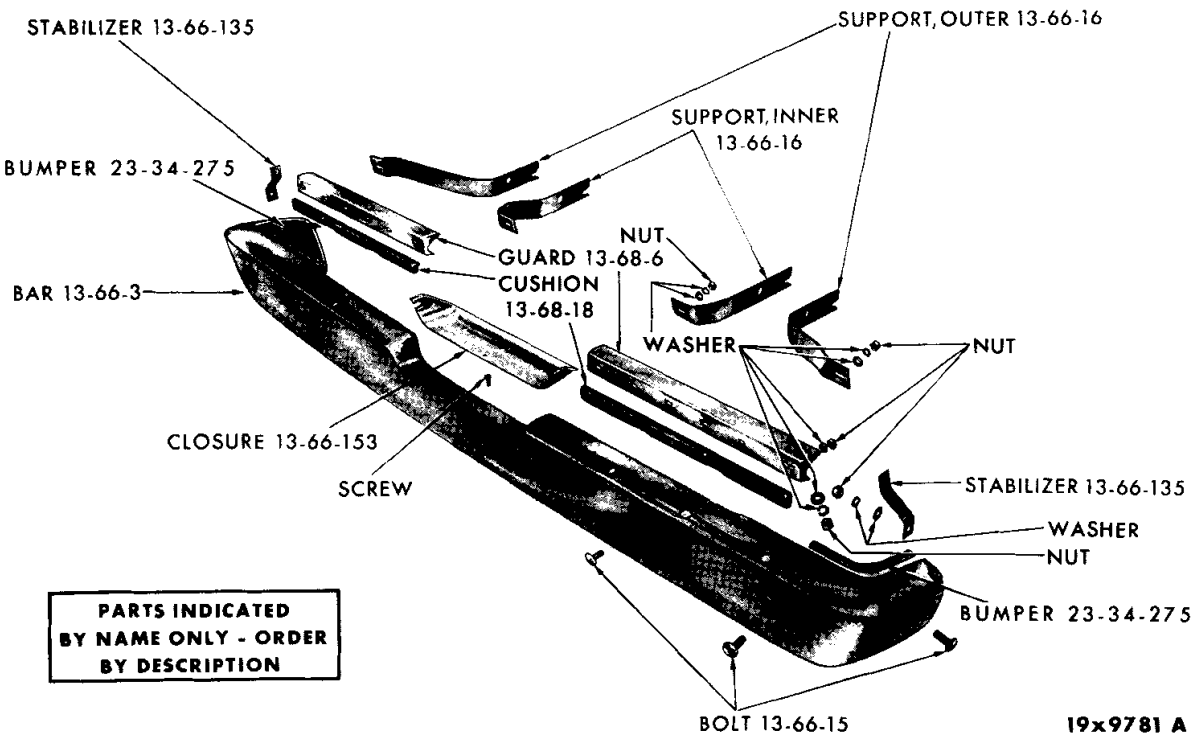

REAR BUMPER - CORONET (EXCEPT STATION WAGON)

MyMopar.com

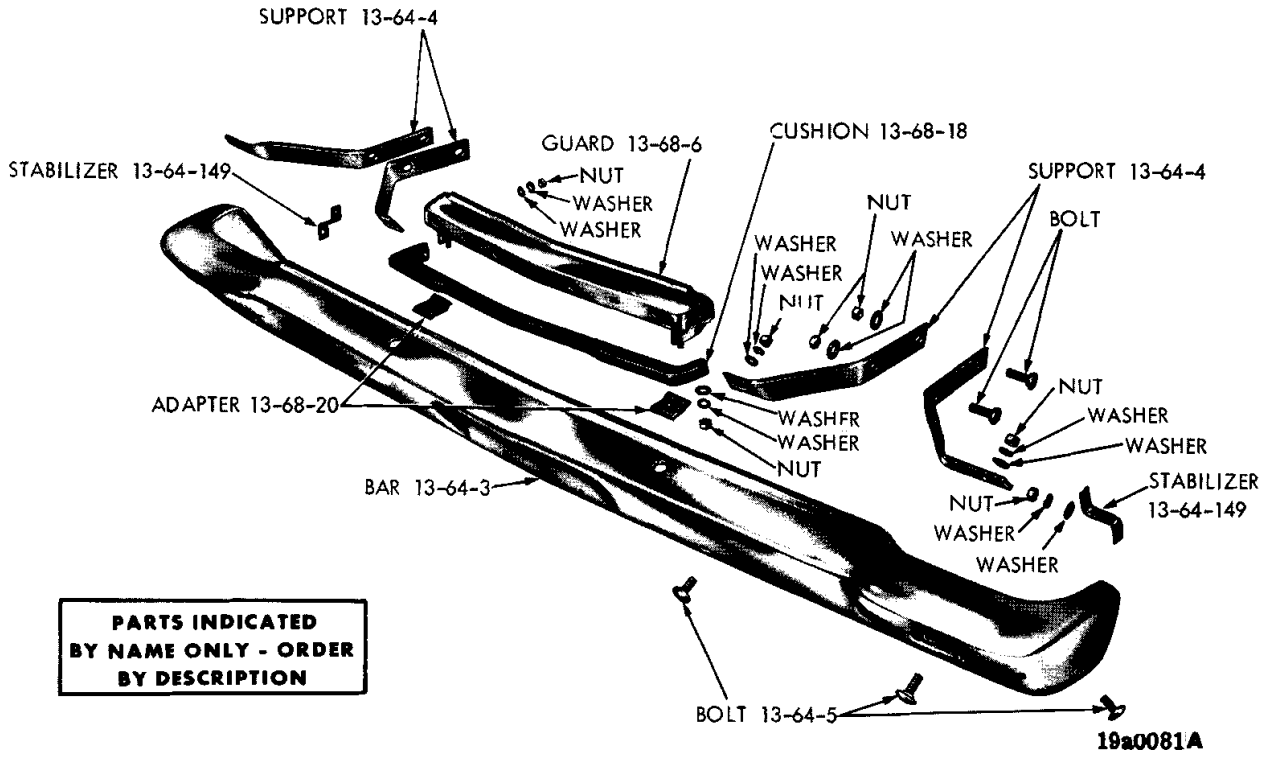

FRONT BUMPER - PLYMOUTH

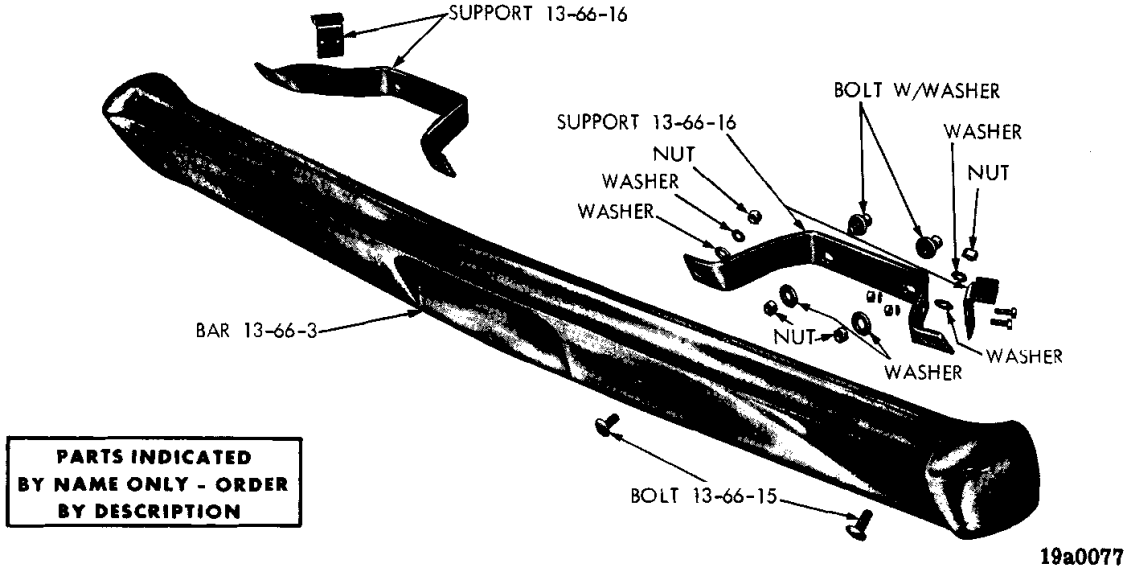

REAR BUMPER - PLYMOUTH (EXCEPT STATION WAGON)

MyMopar.com

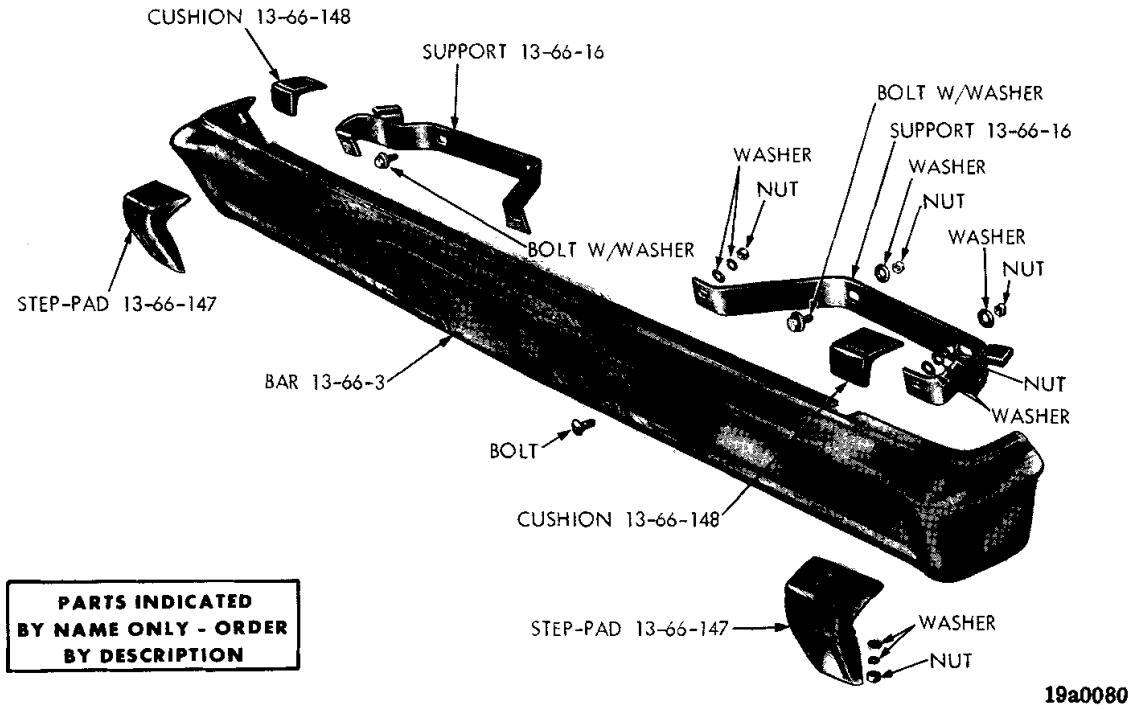

REAR BUMPER - PLYMOUTH AND DODGE (STATION WAGON)

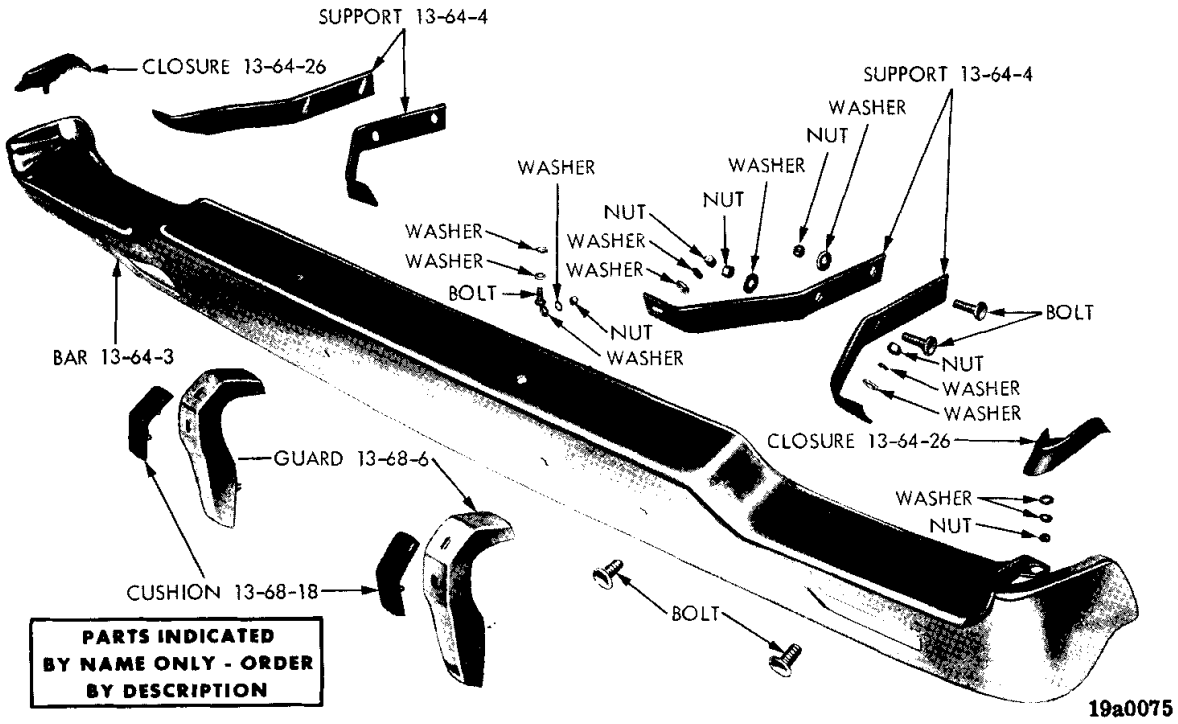

FRONT BUMPER - DODGE

MyMopar.com

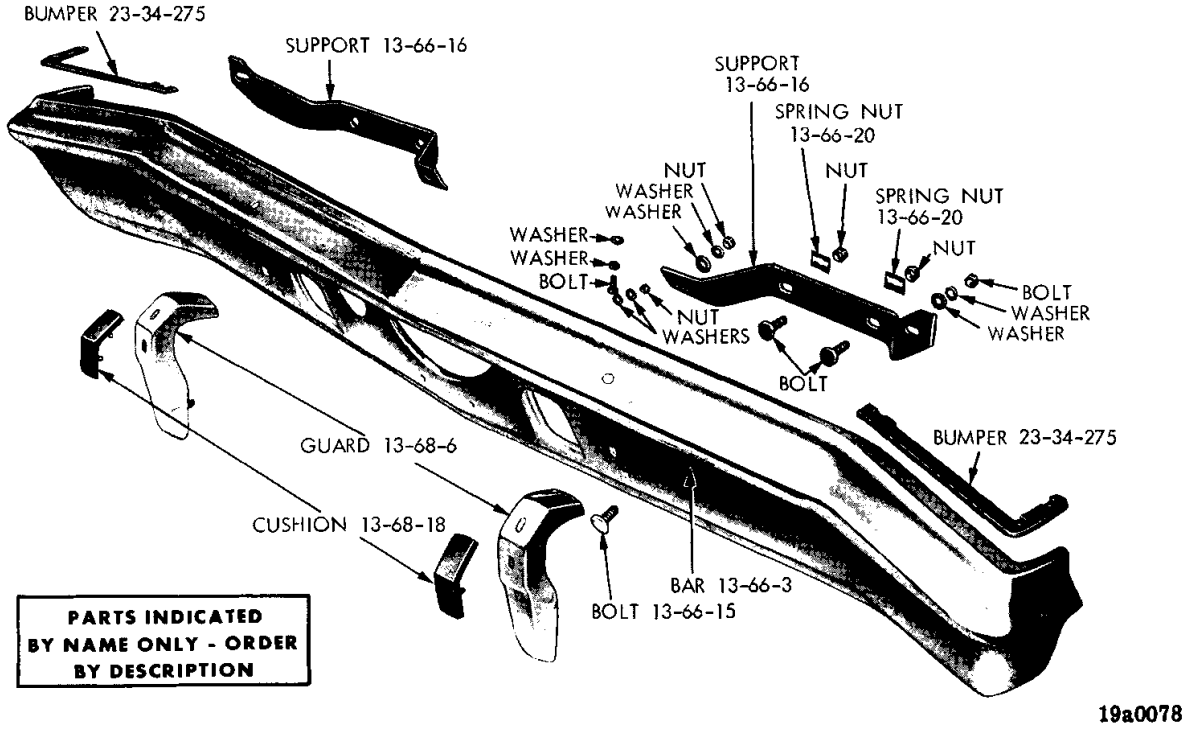

REAR BUMPER - DODGE (EXCEPT STATION WAGON)

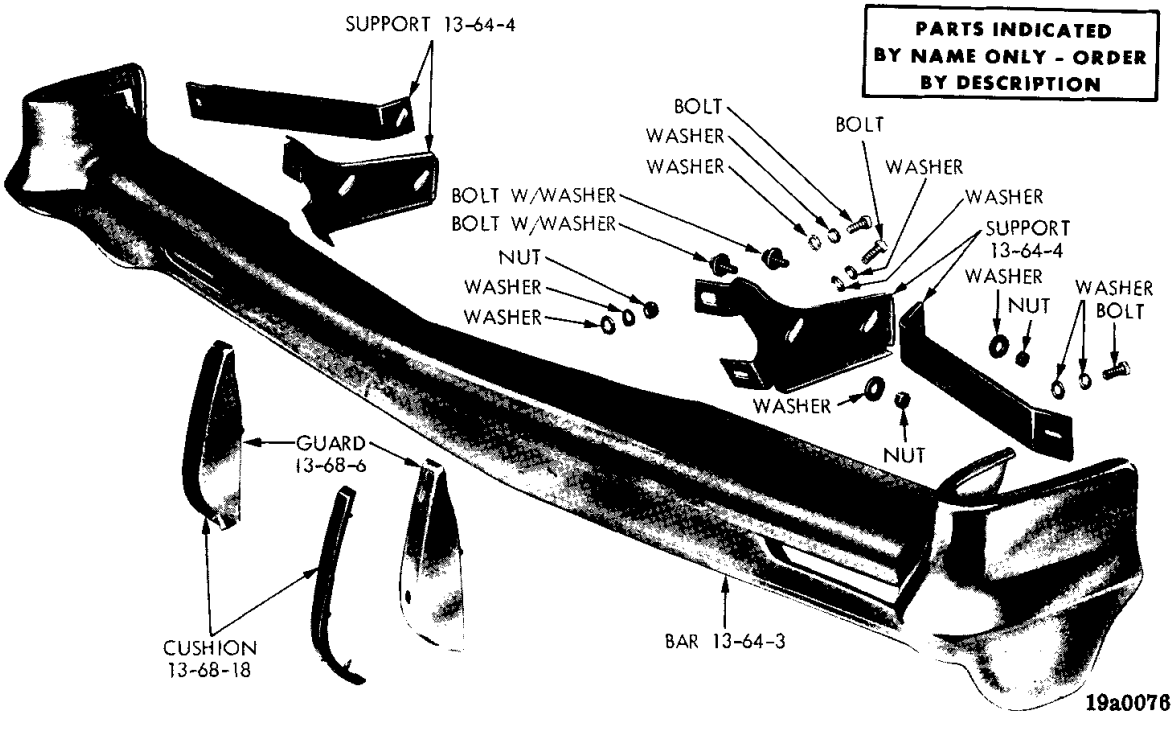

FRONT BUMPER - CHRYSLER

MyMopar.com

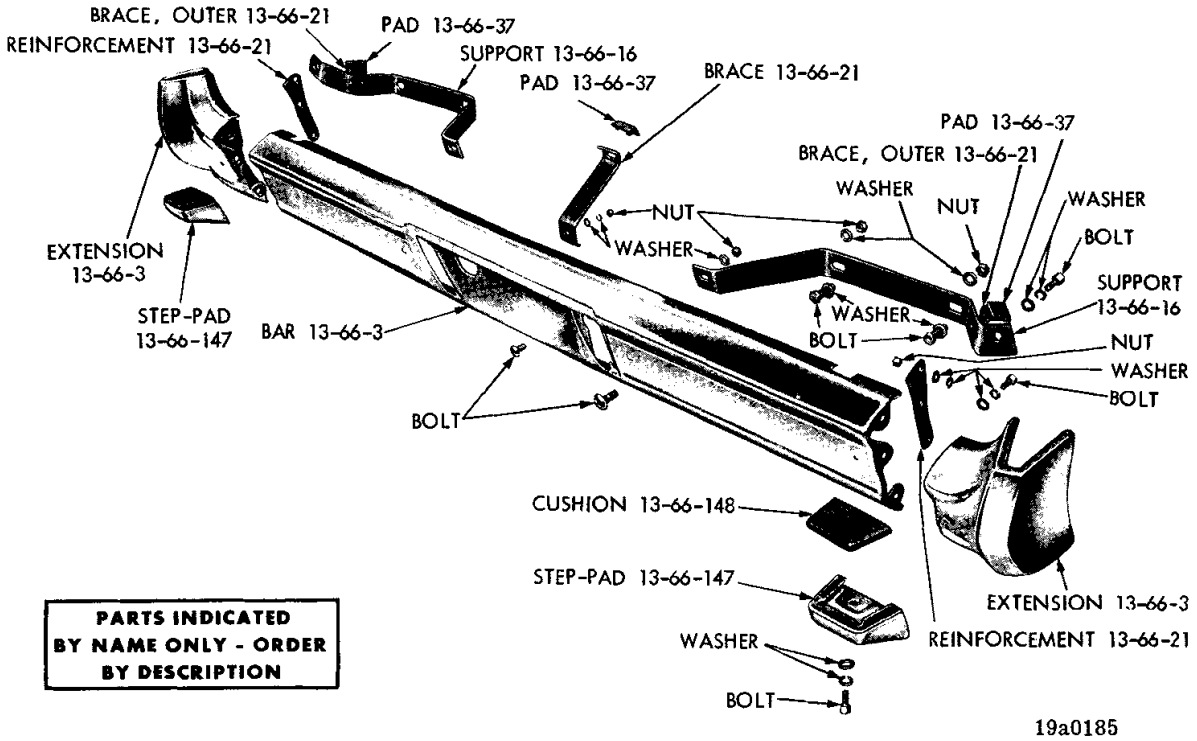

REAR BUMPER - CHRYSLER (STATION WAGON)

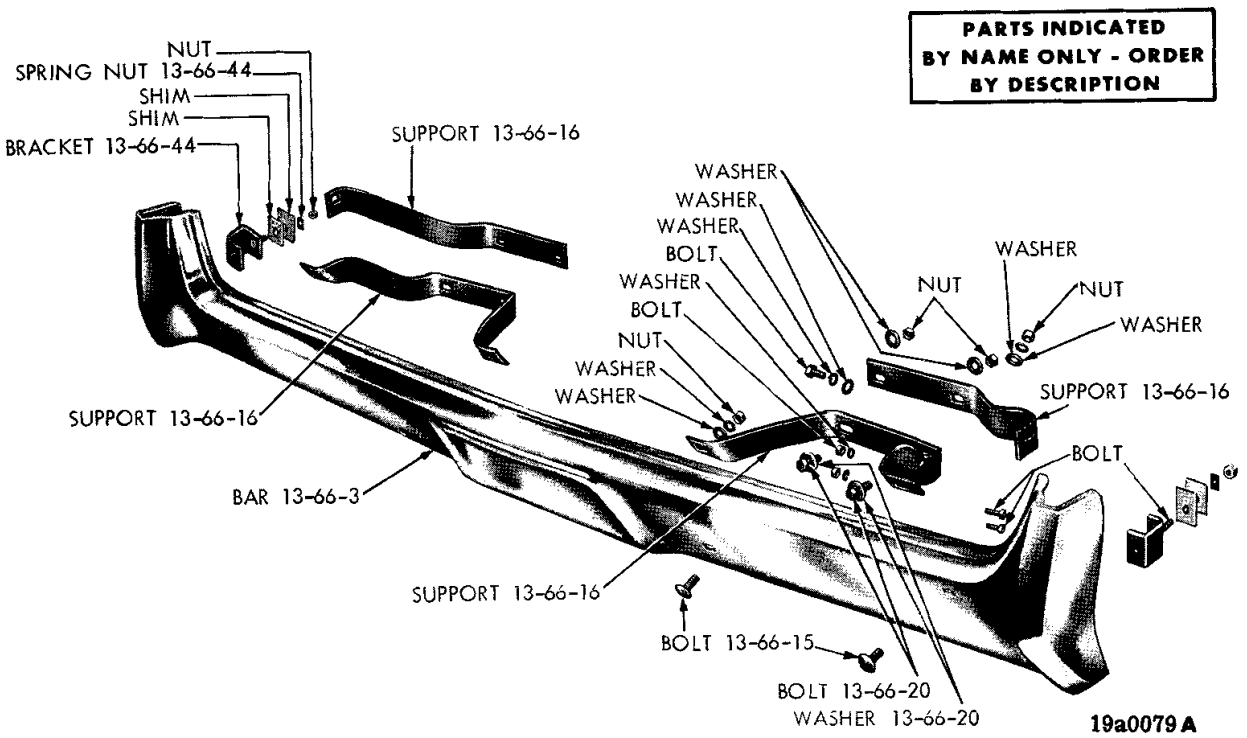

REAR BUMPER - CHRYSLER (EXCEPT STATION WAGON)

MyMopar.com

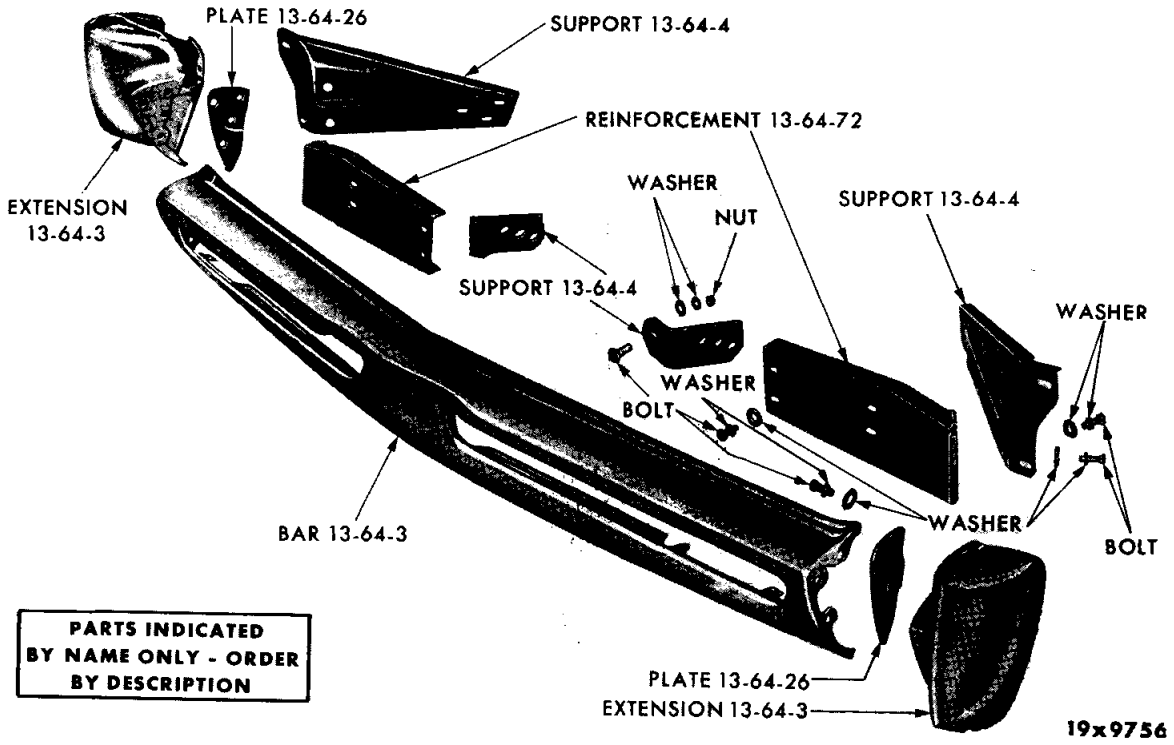

FRONT BUMPER - IMPERIAL

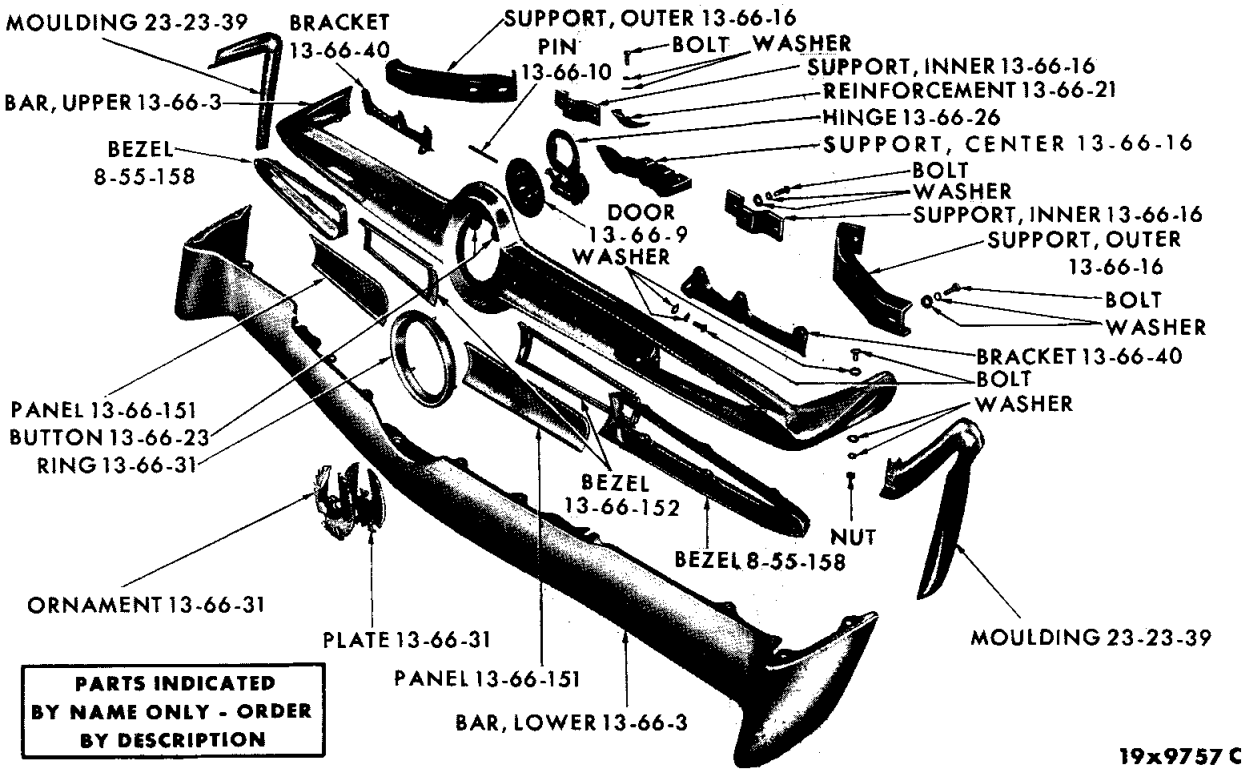

REAR BUMPER - IMPERIAL

MyMopar.com

CODE	PART NAME AND DESCRIPTION	CYL	PER CAR	VALIANT / DART	PLYMOUTH BELVEDERE / DODGE CORONET	PLYMOUTH FURY / DODGE POLARA / CHRYSLER	IMPERIAL

NOTES

TYPE LETTERS Indicate:

V - Valiant	R - Belvedere	P - Plymouth	C - Chrysler
L - Dart	W - Coronet	D - Dodge	Y - Imperial

★Indicates use as required.

⊟Indicates parts not listed in any previous parts book.

Printed in U.S.A.

Prices and specifications subject to change without notice.

MyMopar.com

CODE	PART NAME AND DESCRIPTION	CYL	PER CAR	VALIANT / DART	PLYMOUTH BELVEDERE / DODGE CORONET	PLYMOUTH FURY / DODGE POLARA / CHRYSLER	IMPERIAL
13-01-0	**FRAME ASSEMBLY**						
13-01-1	FRAME, P1	6	1	---- ---	---- ---	2461 889	
	P2	8	1	---- ---	---- ---	2461 885	
	D, C, (Also use 2 of 2269 250 Seal) (Code 2-14-13)	8	1	---- ---	---- ---	⊟2576 549	
	Except Cv. Cp., UP TO Serial No. 129749		1	---- ---	---- ---	---- ---	2409 089
	Except Cv. Cp., AFTER Serial No. 129749		1	---- ---	---- ---	---- ---	2460 999
	Cv. Cp., UP TO Serial No. 133026		1	---- ---	---- ---	---- ---	2409 090
	Cv. Cp., AFTER Serial No. 133026		1	---- ---	---- ---	---- ---	2460 998
13-04-0	**FRAME SUB-SIDEMEMBER**						
13-04-20	SHIELD, Front Sidemember Splash		1	---- ---	---- ---	---- ---	2461 822-3
13-04-21	CLIP, Frame Sub Sidemember Splash Shield		8	---- ---	---- ---	2405 049	
13-10-0	**FRAME ENGINE REAR SUPPORT CROSSMEMBER**						
13-10-1	CROSSMEMBER, Frame Trans. and Engine Mounting		1	---- ---	---- ---	2461 670	
	SCREW w/WASHER, Frame Trans. Mounting Crossmember, Upper		2	---- ---	---- ---	⊟6026 489	
	Side		8	---- ---	---- ---	⊟6026 489	
	Except Manual Trans.		1	---- ---	*2265 423		
	Manual Trans.	8	1	---- ---	*2208 740		
	Except Cv. Cp		1	---- ---	---- ---	---- ---	2260 323
	Cv. Cp.		1	---- ---	---- ---	---- ---	*1940 304
13-10-12	BRACKET, Cv. Cp		1	---- ---	---- ---	---- ---	1940 300-1
13-11-0	**FRAME FRONT CROSSMEMBER**						
13-11-5	CROSSMEMBER, No. 1		1	---- ---	---- ---	2493 925	2200 801
	No. 2, P1	6	1	---- ---	---- ---	2493 924	2122 621
	No. 2	8	1	---- ---	---- ---	2493 761	
	Rear Anchor	8	1	---- ---	---- ---	2071 507	
13-11-17	ISOLATOR, Rear Anchor Crossmember, D. C	8	1	---- ---	---- ---	2071 514-5	
	SCREW, w/WASHER, D, C	8	4	---- ---	---- ---	6025 558	
	NUT, D, C	8	4	---- ---	---- ---	9417 668	
13-18-0	**FRAME REAR CROSSMEMBER**						
13-18-4	CROSSMEMBER		1	---- ---	---- ---	---- ---	2409 084
13-18-5	REINFORCEMENT		1	---- ---	---- ---	---- ---	2409 083
13-33-0	**BATTERY SUPPORT TRAY**						
	NOTE: Battery Support Tray and Related Parts are Illustrated in Group 12 - Fenders and Sheet Metal.						
13-33-61	TRAY		1	2260 463	2201 536	2461 791	
	SCREW, w/WASHER, Tray Support Bracket		4	6022 777			
	SCREW, w/WASHER, Tray Support Brace to Tray		1	---- ---	6022 895	6022 895	
	SCREW, w/WASHER, Tray to Fender Shield		2	---- ---	6022 895		
	Tray to Front Fender Wheelhouse Inner Panel		1	---- ---	---- ---	6025 290	
13-33-62	BRACKET, Support		2	2208 591			

TYPE LETTERS Indicate: V - Valiant, L - Dart, R - Belvedere, W - Coronet, P - Plymouth, D - Dodge, C - Chrysler, Y - Imperial

★Indicates use as required. Numerals in parentheses ( ) refer to notes. Printed in U.S.A.
⊟Indicates parts not listed in any previous parts book. Prices and specifications subject to change without notice.
* Indicates change or addition.

March 1966 Supersedes May 1965.

MyMopar.com

CODE	PART NAME AND DESCRIPTION	CYL	PER CAR	VALIANT / DART	PLYMOUTH BELVEDERE / DODGE CORONET	PLYMOUTH FURY / DODGE POLARA / CHRYSLER	IMPERIAL
13-33-0	**BATTERY SUPPORT TRAY - Cont'd**						
13-33-68	BRACE, Support		1	---- ---	2461 790		
	Except Cv. Cp.		1	---- ---	---- ---	---- ---	2260 435
	J-NUT, to Support Bracket		2	6023 170			
	Brace to Front Crossmember		2	---- ---	6023 169		
	Support Brace to Frame		1	---- ---	6023 171		
	Support Brace to Tray		1	---- ---	6023 171	6023 171	6023 171
13-33-69	STRUT, Tray to Yoke, Cv. Cp.		1	---- ---	---- ---	---- ---	2461 813
13-34-0	**BATTERY HOLD-DOWN STRAP**						
13-34-3	STRAP		1	1828 352	1828 352	2530 282	1828 352
13-34-12	BRACE, Hold-Down Strap to Fender, Cv. Cp.		1	---- ---	---- ---	---- ---	2461 811
13-35-0	**BATTERY HEAT SHIELD**						
13-35-1	SHIELD, P and D		1	---- ---	2460 972	2530 975	
	J-NUT, P and D		2	---- ---	6023 167	6023 167	
13-36-0	**BATTERY HOLD-DOWN STUD**						
13-36-5	STUD, Inner		1	2074 089	2074 089	2074 089	1408 918
	Outer		1	2074 090	2260 437	---- ---	1408 915
	WING-NUT		2	6023 523	6023 523	6023 523	
13-54-0	**FRAME REAR SPRING HANGER**						
13-54-4	HANGER, Front	6	2	2403 187			
		8	2	2403 768			
	V, Barracuda		2	2403 768			
	R, except Sta. Wgn.		2	---- ---	2403 742		
	R, Sta. Wgn.		2	---- ---	2403 746		
	W, except Sta. Wgn.		2	---- ---	2462 025		
	W, Sta. Wgn.		2	---- ---	2403 746		
	R2, W2, 426 cu. in. Eng., Hemispherical	8	2	---- ---	2403 742		
	Except Sta. Wgn.		2	---- ---	---- ---	2403 798	
	Sta. Wgn.		2	---- ---	---- ---	2403 988	
			2	---- ---	---- ---	---- ---	2260 310
13-54-11	BOLT, Front Hanger		8	2403 247	2403 247	2403 247	
	Rear Axle Control Strut Hanger		8	---- ---	---- ---	---- ---	2403 247
13-54-15	HANGER, Rear		2	2071 764			
	P, except Sta. Wgn.		2	---- ---	---- ---	2403 862	
	D, C, except Sta. Wgn.	8	2	---- ---	---- ---	2403 860	
	Sta. Wgn.		1	---- ---	---- ---	2462 058-9	
			2	---- ---	---- ---	---- ---	1735 128
	D, 4 D., Cal. Police Only	8	1	---- ---	---- ---	2462 058-9	
	NOTE: For R and W Models, see Code 23-32-93.						
13-64-0	**FRONT BUMPER FACE BAR**						
13-64-3	BAR, Face, V		1	2404 520			
	L		1	2461 150			
	R		1	---- ---	2461 825		
	R2, 426 cu. in. Eng., Hemispherical	8	1	---- ---	2461 300		
	W		1	---- ---	2461 300		
	W2, 426 cu. in. Eng., Hemispherical	8	1	---- ---	2416 719		

TYPE LETTERS Indicate: V - Valiant, L - Dart, R - Belvedere, W - Coronet, P - Plymouth, D - Dodge, C - Chrysler, Y - Imperial

★Indicates use as required. Numerals in parentheses ( ) refer to notes. Printed in U.S.A.

⊟Indicates parts not listed in any previous parts book. Prices and specifications subject to change without notice.

MyMopar.com

CODE	PART NAME AND DESCRIPTION	CYL	PER CAR	VALIANT / DART	PLYMOUTH BELVEDERE / DODGE CORONET	PLYMOUTH FURY / DODGE POLARA / CHRYSLER	IMPERIAL
13-64-0	**FRONT BUMPER FACE BAR - Cont'd**						
13-64-3	BAR - Cont'd						
	P		1	---- ---	---- ---	2461 200	
	D	8	1	---- ---	---- ---	2461 250	
	C	8	1	---- ---	---- ---	2461 352	
	Center		1	---- ---	---- ---	---- ---	2404 621
	Extension		1	---- ---	---- ---	---- ---	2404 622-3
13-64-4	SUPPORT, Inner, V		1	2404 530-1			
	Outer, V		1	2404 532-3			
	Inner, L		1	2461 156-7			
	Outer, L		1	2461 158-9			
	Outer, R		1	---- ---	⊟2461 836-7		
	Outer, W		1	---- ---	*2461 310-1		
	Inner, P		1	---- ---	---- ---	2461 206-7	
	Outer, P		1	---- ---	---- ---	2461 208-9	
	Inner, D	8	1	---- ---	---- ---	2461 256-7	
	Outer, D	8	1	---- ---	---- ---	2461 258-9	
	Inner, C	8	1	---- ---	---- ---	2461 362-3	
	Outer, C	8	1	---- ---	---- ---	2461 364-5	
	Inner		1	---- ---	---- ---	---- ---	2404 630-1
	Outer		1	---- ---	---- ---	---- ---	2404 636-7
13-64-5	BOLT, Bumper to Support		★	2074 225	1737 430	2123 898	
	Bumper Inner Support to Frame		4	---- ---	6022 901		
	Bumper Inner Support to Center Bracket		2	---- ---	---- ---	---- ---	1551 766
	Bumper to Stabilizer, P		2	2074 225	---- ---	1737 430	
	Stabilizer to Bumper, Sta. Wgn.		2	---- ---	1737 430		
	BOLT w/WASHER, Support to Frame		★	6024 662	6024 662		
13-64-13	WASHER, Support to Frame		8	---- ---	---- ---	1948 969	1948 969
	Support to Frame Bolt		12	---- ---	---- ---	---- ---	1948 969
	Outer Support to Bumper Extension Stud		4	---- ---	---- ---	---- ---	1948 969
	Outer Support to Reinforcement Support Bolt		4	---- ---	---- ---	---- ---	1948 969
	Inner Support to Center Bracket Bolt		2	---- ---	---- ---	---- ---	1948 969
13-64-26	CLOSURE, D	8	1	---- ---	---- ---	2461 266-7	
	PLATE		1	---- ---	---- ---	---- ---	2404 624-5
13-64-38	TAPE, Bumper		★	---- ---	---- ---	---- ---	2404 741
13-64-56	SPEED NUT, Support to Frame, Inner Front		4	---- ---	1323 958		
	Support to Frame, Rear except Sta. Wgn., P, D		4	---- ---	---- ---	1323 958	
13-64-60	REINFORCEMENT, Bumper Jacking, P		2	---- ---	---- ---	2461 220	
	D	8	2	---- ---	---- ---	2461 268	
13-64-72	BRACKET, Support Inner, R		1	---- ---	2461 832-3		
	W		1	---- ---	2461 306-7		
	REINFORCEMENT, Bumper Support		1	---- ---	---- ---	---- ---	2404 638-9
13-64-149	STABILIZER, V		1	2404 536-7			
	P		2	---- ---	---- ---	2461 212	
	NUT, w/WASHER, V		2	6012 008			
13-66-0	**REAR BUMPER FACE BAR**						
13-66-3	BAR, Face, V		1	2266 602			
	w/o Guards, except Sta. Wgn., L		1	2266 534			
	w/Guards, except Sta.Wgn., L		1	2266 535			
	Sta. Wgn., L		1	2266 602			

TYPE LETTERS Indicate: V - Valiant, L - Dart, R - Belvedere, W - Coronet, P - Plymouth, D - Dodge, C - Chrysler, Y - Imperial

★Indicates use as required. Numerals in parentheses ( ) refer to notes. Printed in U.S.A.

⊟Indicates parts not listed in any previous parts book. Prices and specifications subject to change without notice.

* Indicates change or addition.

MyMopar.com

CODE	PART NAME AND DESCRIPTION	CYL	PER CAR	VALIANT / DART	PLYMOUTH BELVEDERE / DODGE CORONET	PLYMOUTH FURY / DODGE POLARA / CHRYSLER	IMPERIAL
13-66-0	**REAR BUMPER FACE BAR - Cont'd**						
13-66-3	BAR - Cont'd						
	Except Sta. Wgn., R		1	---- ---	*2266 562		
	w/Step-Pad, Sta. Wgn., R		1	---- ---	2266 567		
	w/o Step-Pad, Sta. Wgn., R		1	---- ---	2266 566		
	Except Sta. Wgn., W		1	---- ---	2404 660		
	w/Step-Pad, Sta. Wgn., W		1	---- ---	2266 567		
	w/o Step-Pad, Sta. Wgn., W		1	---- ---	2266 566		
	Except Sta. Wgn., P		1	---- ---	---- ---	2461 225	
	Sta. Wgn., P		1	---- ---	---- ---	2461 279	
	Except Sta. Wgn., D	8	1	---- ---	---- ---	2461 277	
	Sta. Wgn., D	8	1	---- ---	---- ---	2461 279	
	Except Sta. Wgn., C	8	1	---- ---	---- ---	2461 399	
	Center, Sta. Wgn., C1, C3	8	1	---- ---	---- ---	2461 377	
	Extension, Sta. Wgn., C1, C3	8	1	---- ---	---- ---	2461 378-9	
	Upper		1	---- ---	---- ---	---- ---	2461 425
	Lower		1	---- ---	---- ---	---- ---	2404 701
13-66-9	DOOR, Bumper Filler		1	---- ---	---- ---	---- ---	2404 725
13-66-10	PIN, Bumper Filler Door		1	---- ---	---- ---	---- ---	2404 730
13-66-14	COVER, Bumper Back-Up Lamp Opening,						
	except Sta. Wgn., D	8	1	---- ---	---- ---	2483 314-5	
	Sta. Wgn., P, D, C1	8	2	---- ---	---- ---	2449 535	
13-66-15	BOLT, Bumper to Support		★	2074 225	1737 430	2123 898	
	Bumper to Stabilizer, except Sta. Wgn., L		2	2074 225	1737 430		
	Bumper to Outer Brace, Sta. Wgn., P, D		2	---- ---	---- ---	2123 898	
	Bumper to Center Brace, Sta. Wgn.		1	---- ---	---- ---	2074 225	
	Stabilizer to Quarter Panel, except Sta. Wgn., L and W		2	6024 243	6024 243		
13-66-16	SUPPORT, except Sta. Wgn., V		1	2266 530-1			
	Except Sta. Wgn., L		1	2266 536-7			
	Sta. Wgn.		1	2266 542-3			
	Inner, except Sta. Wgn., R		1	---- ---	2405 436-7		
	Outer, except Sta. Wgn., R		1	---- ---	2461 856-7		
	Inner, except Sta. Wgn., W		1	---- ---	2404 670-1		
	Outer, except Sta. Wgn., W		1	---- ---	2404 672-3		
	Inner, Sta. Wgn.		1	---- ---	2266 574-5		
	Outer, Sta. Wgn.		1	---- ---	2266 572-3		
	Except Sta. Wgn., P		1	---- ---	---- ---	2461 230-1	
	Sta. Wgn., P		1	---- ---	---- ---	2461 292-3	
	Except Sta. Wgn., D	8	1	---- ---	---- ---	2461 282-3	
	Sta. Wgn., D	8	1	---- ---	---- ---	2461 292-3	
	Inner, except Sta. Wgn., C	8	1	---- ---	---- ---	⊟2461 440-1	
	Outer, except Sta. Wgn., C	8	1	---- ---	---- ---	2461 388-9	
	Sta. Wgn., C1, C3	8	1	---- ---	---- ---	2461 460-1	
	Center		1	---- ---	---- ---	---- ---	2404 714
	Inner		2	---- ---	---- ---	---- ---	2404 712
	Outer		1	---- ---	---- ---	---- ---	2404 717-8
13-66-20	BOLT, Support to Frame		4	---- ---	6024 662		
	WASHER, Support to Frame, Sta. Wgn., P, D		★	---- ---	---- ---	*6022 899	
	Bracket to Support Bolt		4	---- ---	---- ---	---- ---	1948 969
	Support to Frame Bolt		8	---- ---	---- ---	---- ---	1948 969
	Center Support to Frame Bolt		3	---- ---	---- ---	---- ---	1948 969
	SPRING-NUT, Support to Frame		4	---- ---	---- ---	6023 850	
13-66-21	REINFORCEMENT, Bumper Coach Joint,						
	Sta. Wgn., C1, C3	8	2	---- ---	---- ---	2461 380	
	Bumper Center		1	---- ---	---- ---	---- ---	2404 716

TYPE LETTERS Indicate: V - Valiant, L - Dart, R - Belvedere, W - Coronet, P - Plymouth, D - Dodge, C - Chrysler, Y - Imperial

★Indicates use as required. Numerals in parentheses ( ) refer to notes. Printed in U.S.A.

⊟Indicates parts not listed in any previous parts book. Specifications subject to change without notice.

MyMopar.com

CODE	PART NAME AND DESCRIPTION	CYL	PER CAR	VALIANT / DART	PLYMOUTH BELVEDERE / DODGE CORONET	PLYMOUTH FURY / DODGE POLARA / CHRYSLER	IMPERIAL
13-66-0	**REAR BUMPER FACE BAR - Cont'd**						
13-66-21	BRACE, Bumper Outer, Sta. Wgn., P, D		1	---- ---	---- ---	2461 466-7	
	Sta. Wgn., C1, C3	8	1	---- ---	---- ---	2461 468-9	
	Sta. Wgn., Bumper Center		1	---- ---	---- ---	2461 464	
13-66-23	BUTTON, Bumper Filler Door		2	---- ---	---- ---	---- ---	1941 007
13-66-25	SPRING, Bumper Filler Door		1	---- ---	---- ---	---- ---	2404 731
13-66-26	HINGE, Bumper Filler Door		1	---- ---	---- ---	---- ---	2404 728
13-66-31	ORNAMENT, Bumper Filler Door		1	---- ---	---- ---	---- ---	2404 734
	PLATE, Bumper Filler Door Ornament		1	---- ---	---- ---	---- ---	2404 732
	RING, Bumper Filler Door		1	---- ---	---- ---	---- ---	2404 737
	SCREW, Bumper Filler Door Ornament		1	---- ---	---- ---	---- ---	6024 893
	NUT, Bumper Filler Door Ornament		1	---- ---	---- ---	---- ---	6006 144
13-66-33	BRACKET, Bumper Filler Door		1	---- ---	---- ---	---- ---	2404 729
13-66-35	RETAINER, Bumper Back-Up Lamp Opening Cover Plate, except Sta. Wgn., D		2	---- ---	---- ---	2483 322	
13-66-37	PAD, Bumper Jacking, Sta. Wgn.		2	---- ---	---- ---	2461 247	
	Bumper Center Brace, Sta. Wgn.		1	---- ---	---- ---	2461 465	
13-66-40	BRACKET, Bumper Light		1	---- ---	---- ---	---- ---	2404 702-3
13-66-42	BRACE, Bumper Support Crossmember, Sta. Wgn.		1	---- ---	---- ---	2461 280-1	
13-66-44	BRACKET, Bumper Impact except Sta. Wgn., C	8	2	---- ---	---- ---	2461 442	
	SPRING-NUT, Bumper Impact Bracket, except Sta. Wgn., C	8	2	---- ---	---- ---	6026 051	
13-66-106	DEFLECTOR, Stone, except Sta. Wgn., L		1	2483 630			
	Except Sta. Wgn., R		1	---- ---	2255 670		
	Except Sta. Wgn., W		1	---- ---	2603 574		
	Except Sta. Wgn., P		1	---- ---	---- ---	2482 667	
			1	---- ---	---- ---	---- ---	2588 054
	NOTE: For Valiant, Dodge, Chrysler see Code 23-34-167.						
13-66-116	SEAL, Stone Deflector, except Sta. Wgn., R		1	---- ---	2424 994		
	P		1	---- ---	---- ---	2526 650	
	D		1	---- ---	---- ---	2574 025	
	C		1	---- ---	---- ---	2484 949	
	CLIP, Stone Deflector Seal, except Sta. Wgn., R		14	---- ---	6006 104		
			★	---- ---	---- ---	2405 049	
13-66-119	EXTENSION, Stone Deflector, except Sta. Wgn., P		1	---- ---	---- ---	2482 668-9	
13-66-135	STABILIZER, V		2	2266 525			
	Except Sta. Wgn., L		2	2266 547			
	Sta. Wgn., L		2	2266 525			
	Except Sta. Wgn., W		2	---- ---	2404 676		
	Sta. Wgn.		2	---- ---	2266 608		
	NUT, w/RETAINER, V		2	6000 123			
	Sta. Wgn., L		2	6000 123			
	SCREW, Shoulder, V		2	6023 977			
	Sta. Wgn., L		2	6023 977			
13-66-147	STEP-PAD, Sta. Wgn., R		2	---- ---	2266 623		
	W2	8	2	---- ---	2266 623		
	P, D		2	---- ---	---- ---	2461 298	
	C1, C3	8	2	---- ---	---- ---	2461 396	

TYPE LETTERS Indicate: V - Valiant, L - Dart, R - Belvedere, W - Coronet, P - Plymouth, D - Dodge, C - Chrysler, Y - Imperial

★Indicates use as required. Numerals in parentheses ( ) refer to notes. Printed in U.S.A.

⊟Indicates parts not listed in any previous parts book. Prices and specifications subject to change without notice.

* Indicates change or addition. March 1966 Supersedes May 1965.

MyMopar.com

CODE	PART NAME AND DESCRIPTION	CYL	PER CAR	VALIANT / DART	PLYMOUTH BELVEDERE / DODGE CORONET	PLYMOUTH FURY / DODGE POLARA / CHRYSLER	IMPERIAL
13-66-0	**REAR BUMPER FACE BAR - Cont'd**						
13-66-148	CUSHION, Step-Pad, Sta. Wgn., P, D		2	---- ---	---- ---	2461 299	
	C1, C3	8	2	---- ---	---- ---	2461 398	
13-66-151	PANEL, Texture Bumper		1	---- ---	---- ---	---- ---	2461 432-3
13-66-152	BEZEL, Panel Texture Bumper		1	---- ---	---- ---	---- ---	2461 428-9
13-66-153	CLOSURE, Center Bumper, except Sta. Wgn., W		1	---- ---	2404 678		
	NUT, w/WASHER, except Sta. Wgn., W		3	---- ---	6025 002		
13-68-0	**BUMPER GUARDS**						
13-68-6	GUARD, Front, V		1	2404 524-5			
	L		2	2461 152			
	R		2	---- ---	2461 828		
	W		2	---- ---	2461 303		
	P		1	---- ---	---- ---	2461 203	
	D		2	---- ---	---- ---	2461 253	
	C		1	---- ---	---- ---	2461 368-9	
	GUARD, Rear, V		2	2266 450			
	L, except Sta. Wgn.		2	2266 540			
	L, Sta. Wgn.		2	2266 450			
	Except Sta. Wgn., R		2	---- ---	2266 606		
	Except Sta. Wgn., W		2	---- ---	2404 664		
	Except Sta. Wgn., P		1	---- ---	---- ---	2461 240-1	
	Except Sta. Wgn., D		1	---- ---	---- ---	2461 290-1	
13-68-12	BRACKET, Guard Front, W		2	---- ---	2461 305		
	Guard Rear, except Sta. Wgn., P		2	---- ---	---- ---	2461 243	
13-68-18	CUSHION, Guard, Front, R		2	---- ---	2266 466		
	W		2	---- ---	2461 304		
	P		1	---- ---	---- ---	2461 204	
	D		2	---- ---	---- ---	2461 254	
	C		2	---- ---	---- ---	2461 370	
	NUT, w/WASHER, R		★	---- ---	6023 271	6023 271	
	CUSHION, Rear, except Sta. Wgn., R		2	---- ---	2266 466		
	W		2	---- ---	2404 666		
	P		2	---- ---	---- ---	2461 242	
	D		2	---- ---	---- ---	2461 254	
	NUT, w/WASHER, D2		★	---- ---	6023 271	6023 271	
	PAD, Impact, except Sta. Wgn., D		2	---- ---	---- ---	2461 296	2404 709
13-68-20	ADAPTER, Guard, Front, P		2	---- ---	---- ---	2461 205	
13-68-21	BRACKET, Pad Impact except Sta. Wgn., C		2	---- ---	---- ---	2461 391	
13-72-0	**BUMPER JACK**						
13-72-1	JACK, V		1	2201 039			
	L, Less Hook		1	2461 103	2461 103	2461 103	2461 107
13-72-2	HANDLE, Jack		1	2201 009	2201 009	2201 009	2201 010
13-72-3	HOOK, Jack, L		1	2461 110	2467 951		
	P		1	---- ---	---- ---	2467 953	
	Except Sta. Wgn., D, C		1	---- ---	---- ---	2467 954	
	Sta. Wgn., D, C	8	1	---- ---	---- ---	2467 955	
			1	---- ---	---- ---	---- ---	2460 152
13-72-4	BAR and BASE PACKAGE, Rack, L		1	2275 450	2275 450	2275 450	2275 450

TYPE LETTERS Indicate: V - Valiant, L - Dart, R - Belvedere, W - Coronet, P - Plymouth, D - Dodge, C - Chrysler, Y - Imperial

★Indicates use as required. Numerals in parentheses ( ) refer to notes. Printed in U.S.A.

⊟Indicates parts not listed in any previous parts book. Prices and specifications subject to change without notice.

March 1966 Supersedes May 1965. * Indicates change or addition.

MyMopar.com

GROUP 14 - FUEL

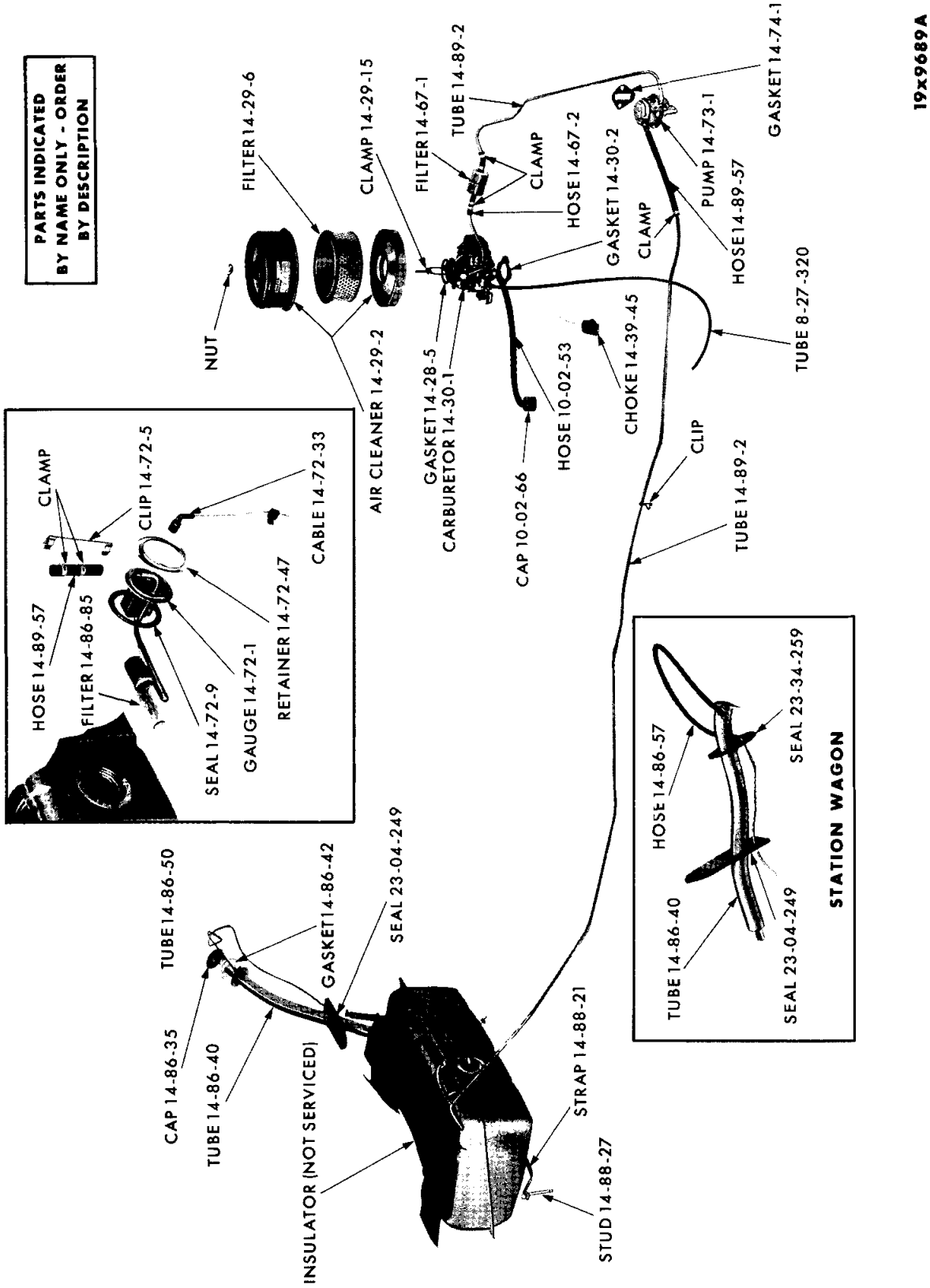

FUEL SYSTEM - VALIANT AND DART

MyMopar.com

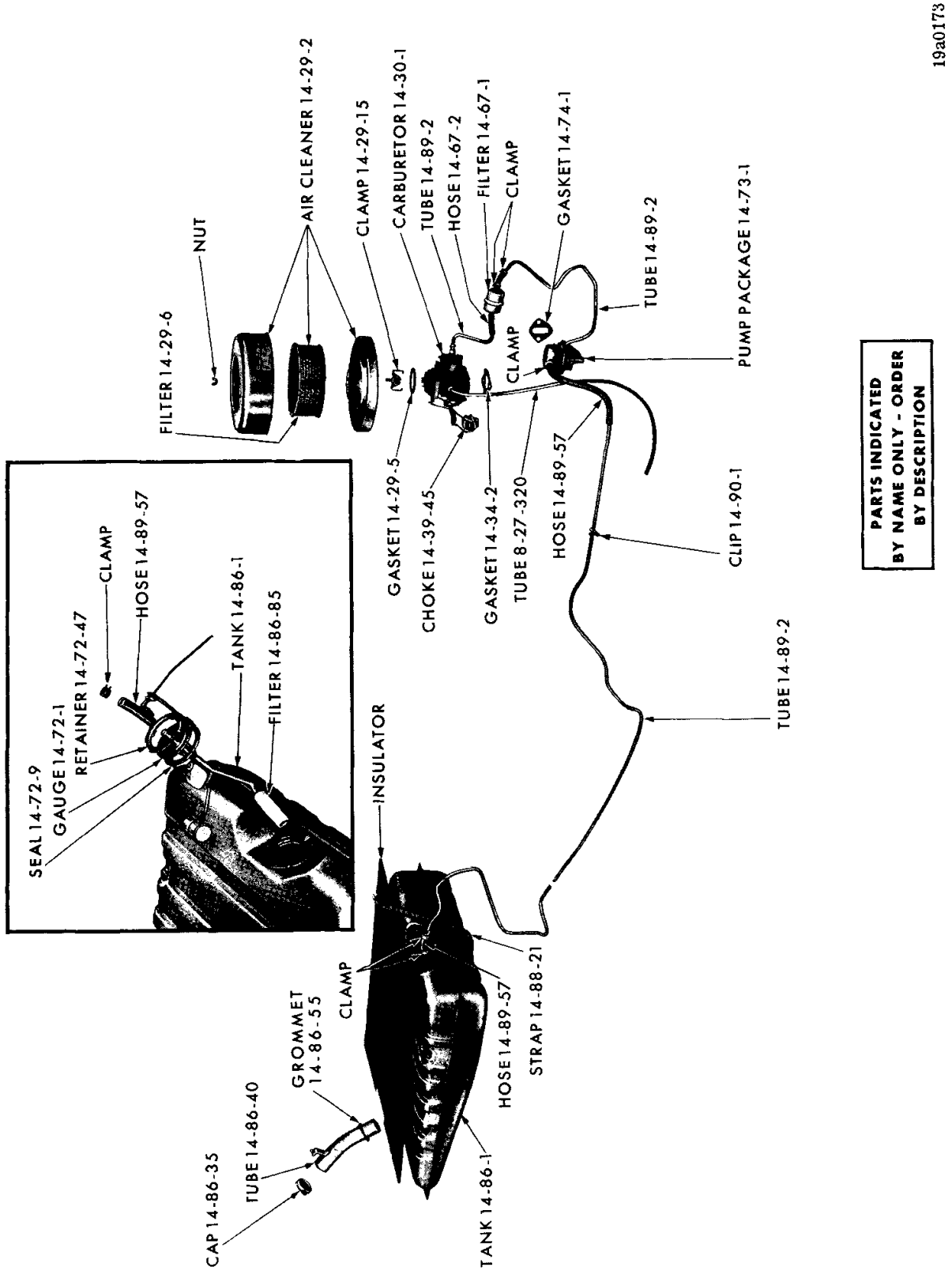

FUEL SYSTEM (6 CYLINDER) - BELVEDERE AND CORONET

MyMopar.com

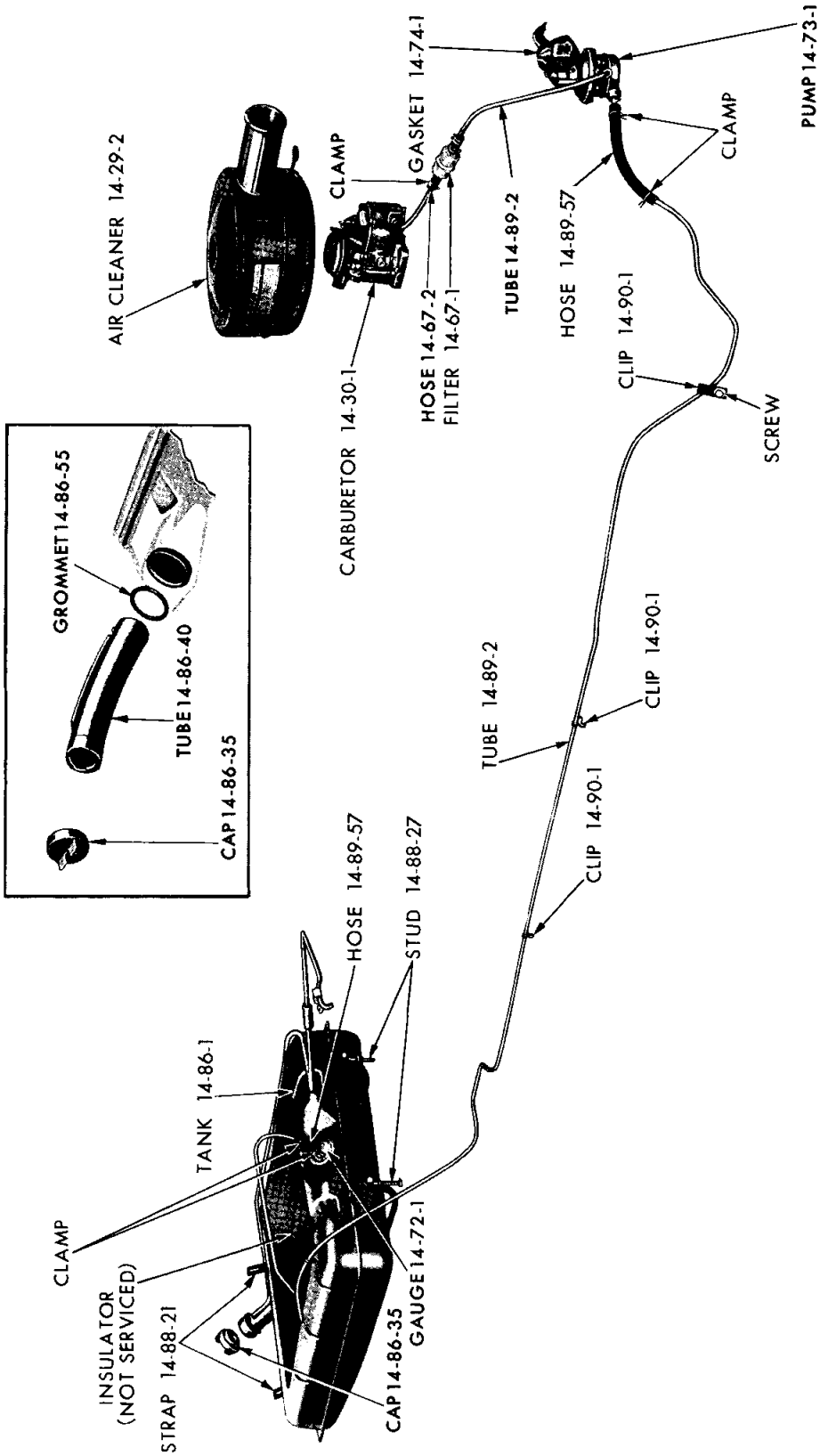

19a0174

PARTS INDICATED
BY NAME ONLY - ORDER
BY DESCRIPTION

FUEL SYSTEM (V8 CYLINDER) - PLYMOUTH, DODGE, CHRYSLER AND IMPERIAL

MyMopar.com

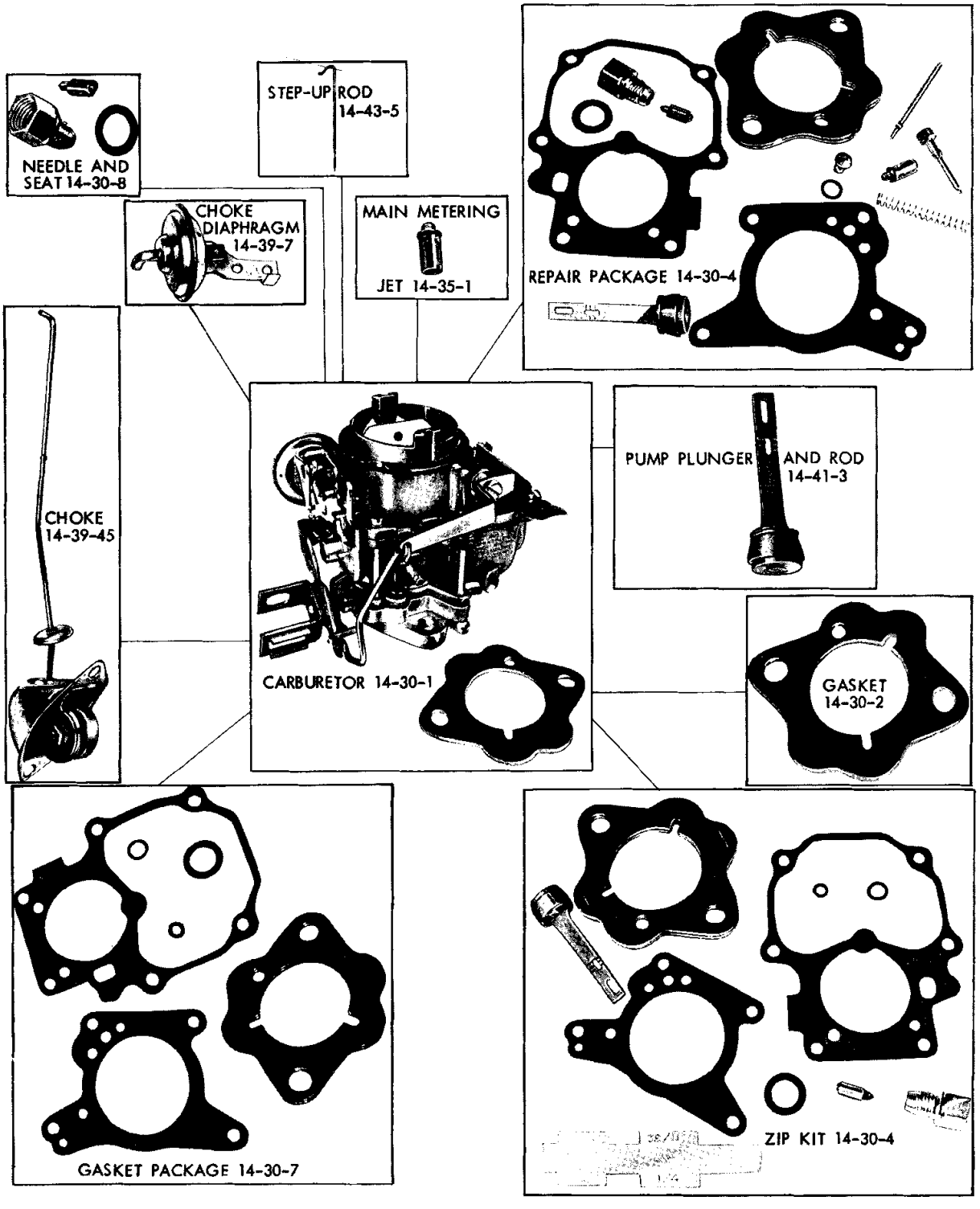

19x9978

1 BARREL CARBURETOR, COMPONENTS AND PACKAGES - CARTER

MyMopar.com

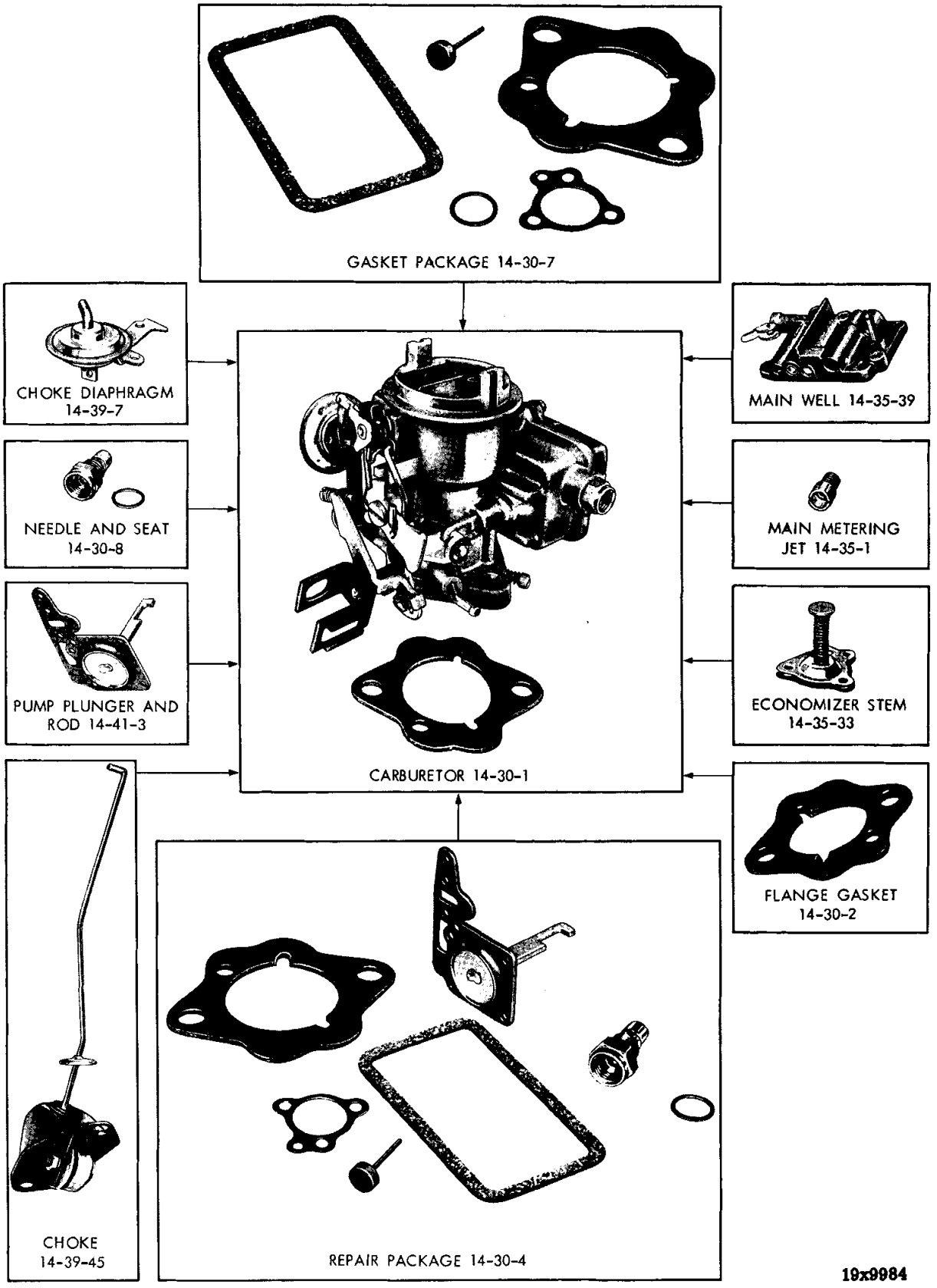

1 BARREL CARBURETOR, COMPONENTS AND PACKAGES - HOLLEY

MyMopar.com

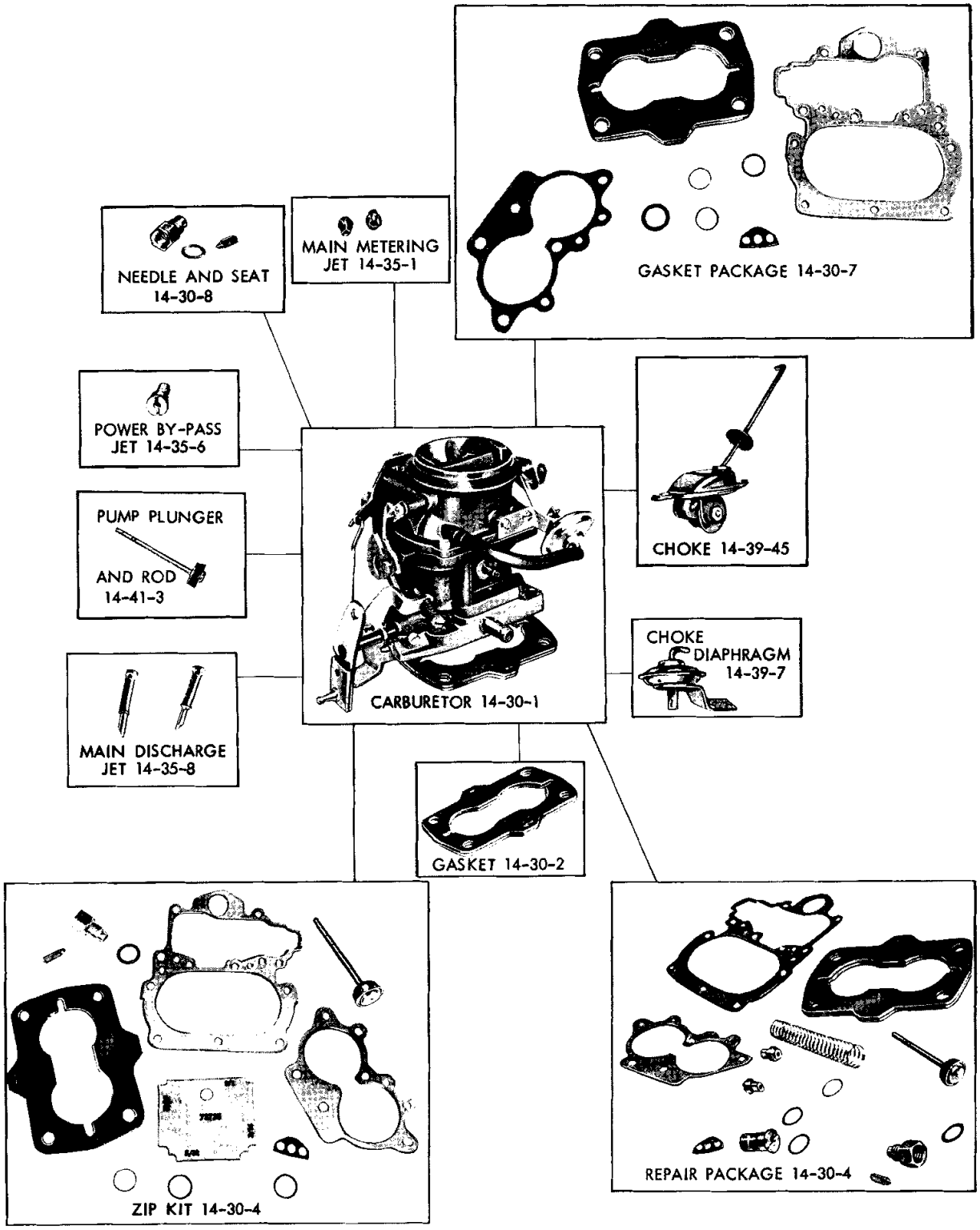

19x9979

2 BARREL CARBURETOR, COMPONENTS AND PACKAGES - BENDIX

MyMopar.com

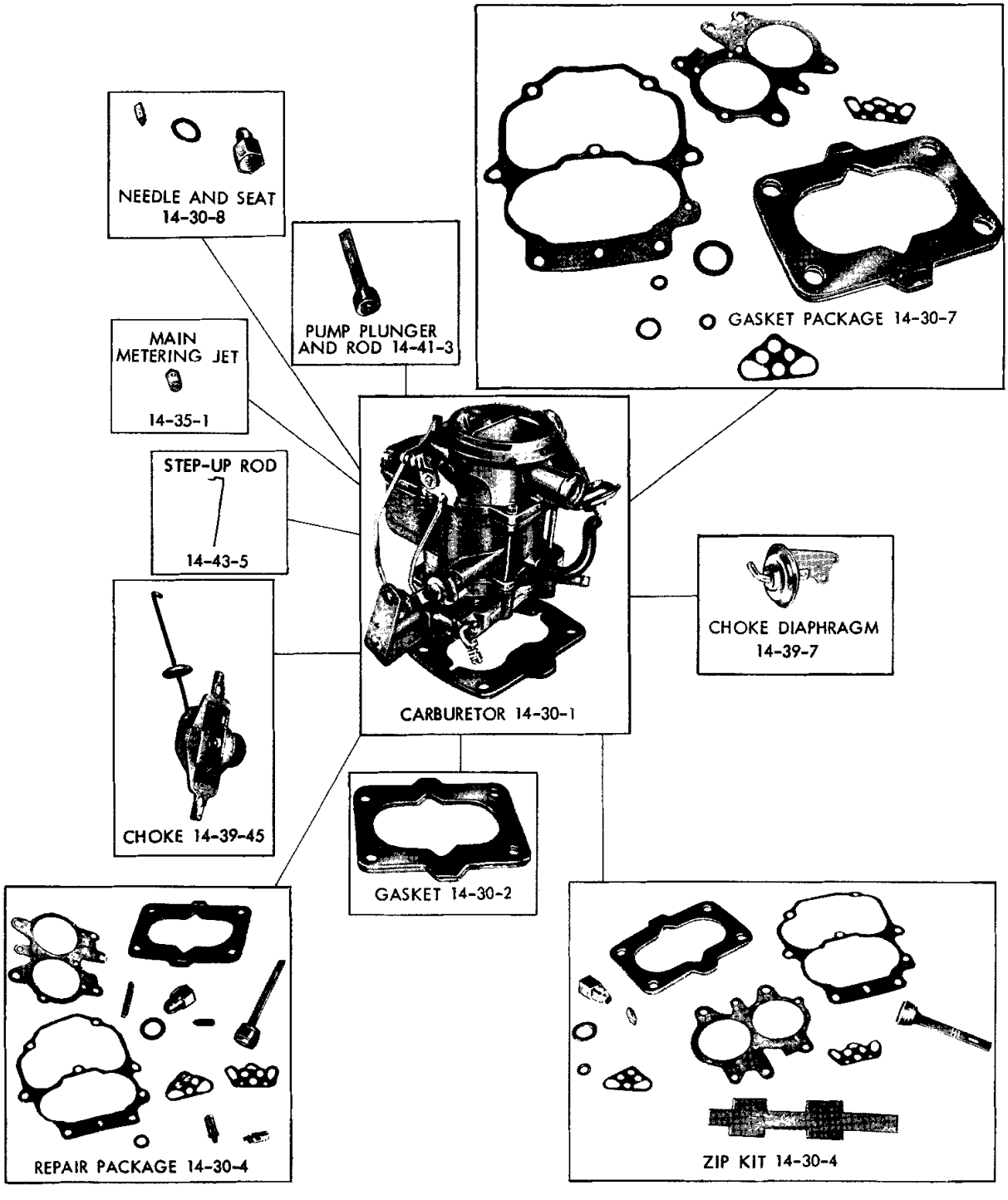

19x9980

2 BARREL CARBURETOR, COMPONENTS AND PACKAGES - CARTER

MyMopar.com

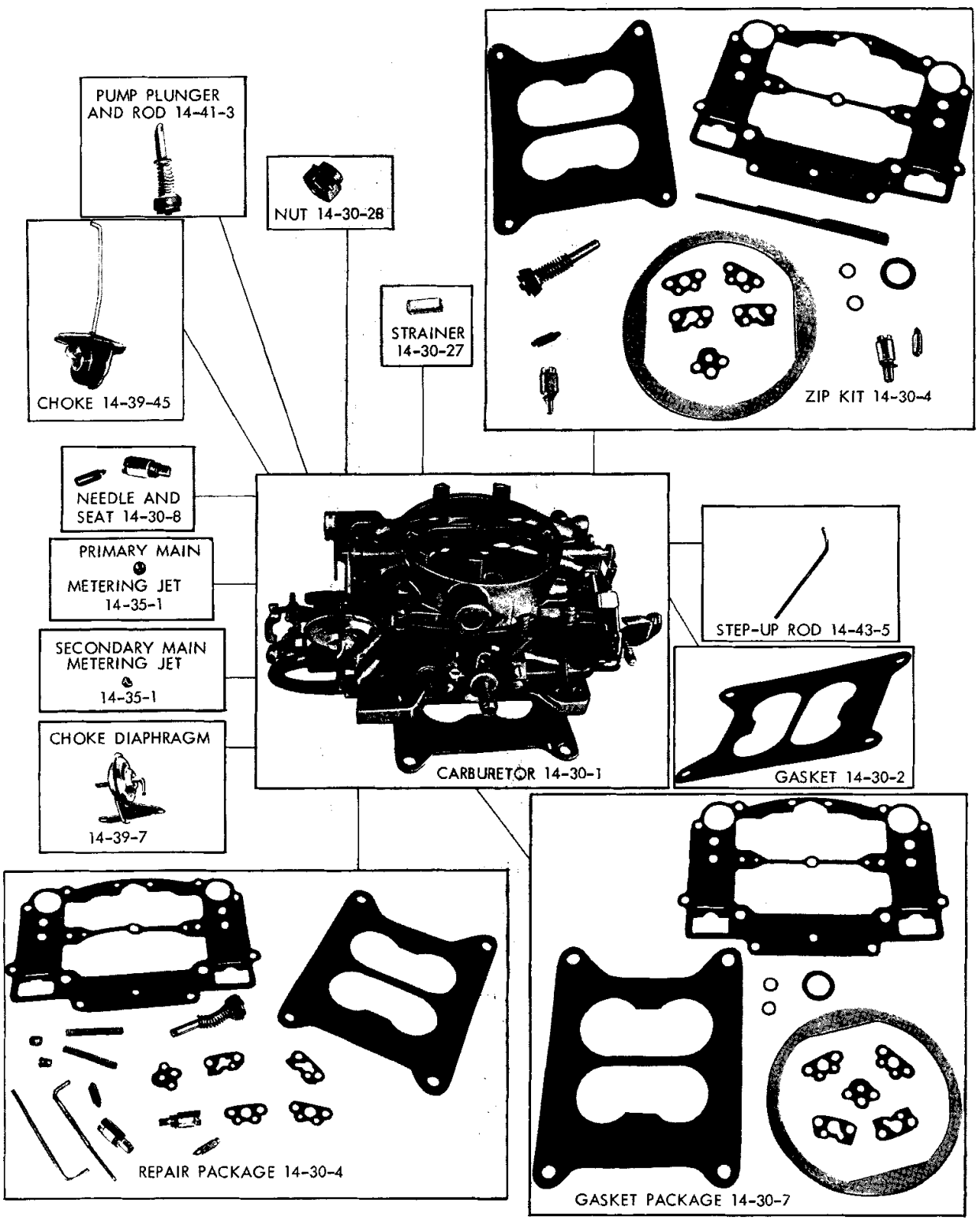

19x9981

4 BARREL CARBURETOR, COMPONENTS AND PACKAGES - CARTER

MyMopar.com

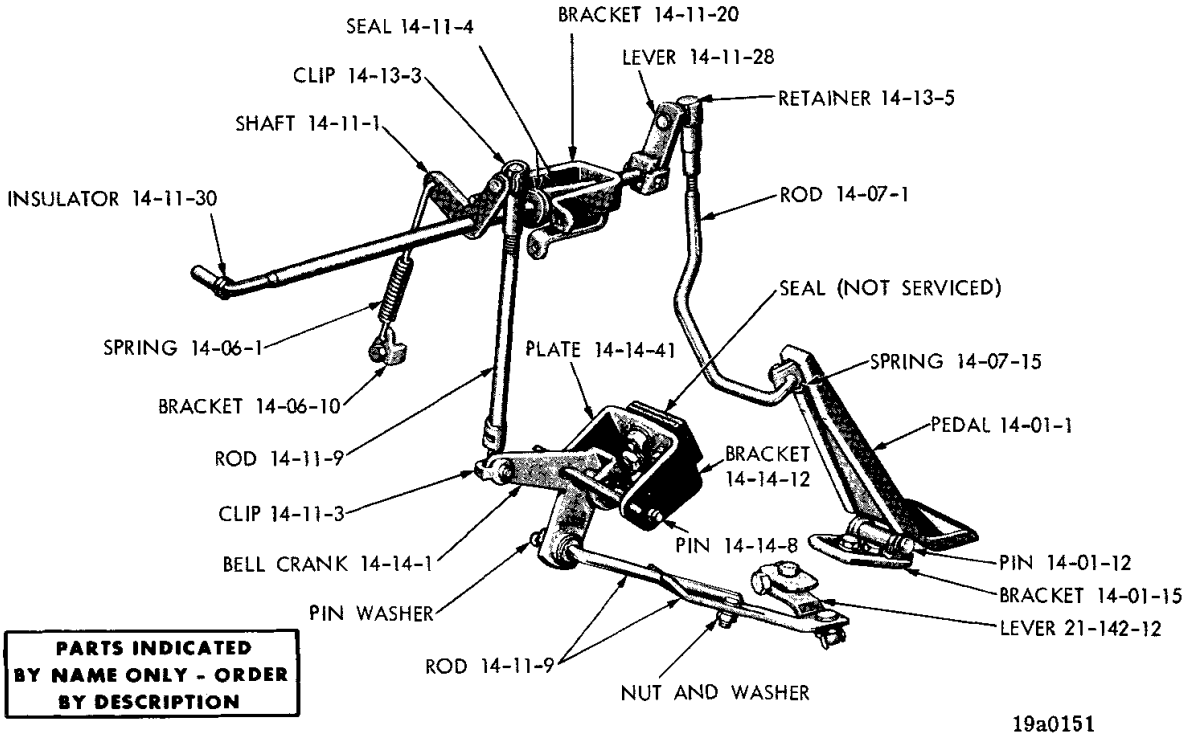

THROTTLE LINKAGE (6 CYLINDER) - VALIANT AND DART

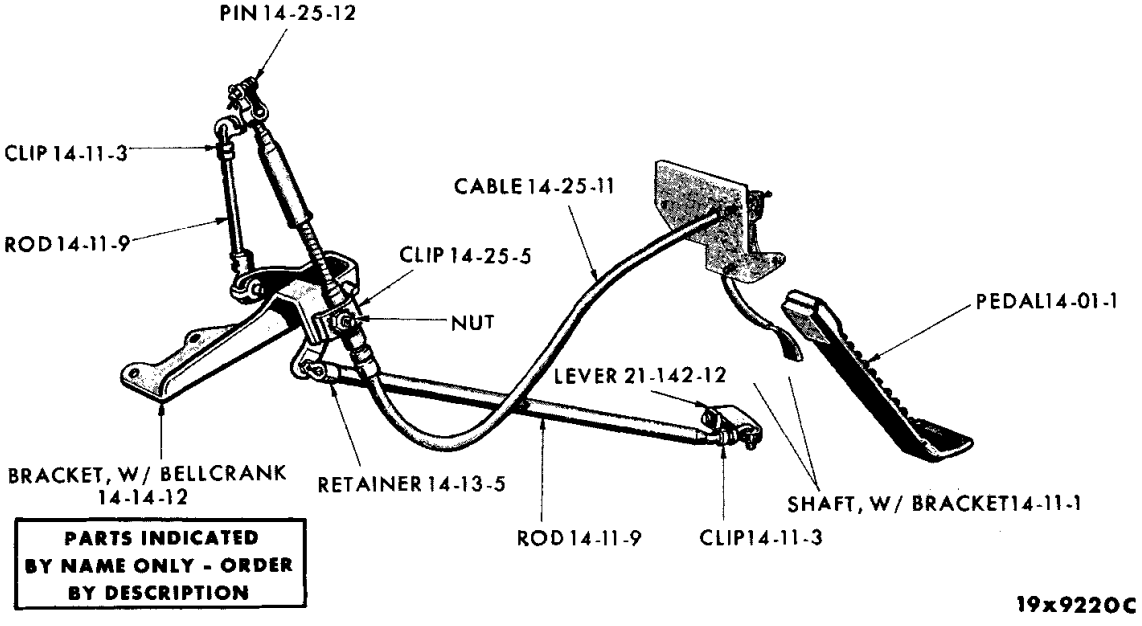

THROTTLE LINKAGE (6 CYLINDER 170 AND 225 ENGINE WITH AIR CONDITIONING) - VALIANT AND DART

MyMopar.com

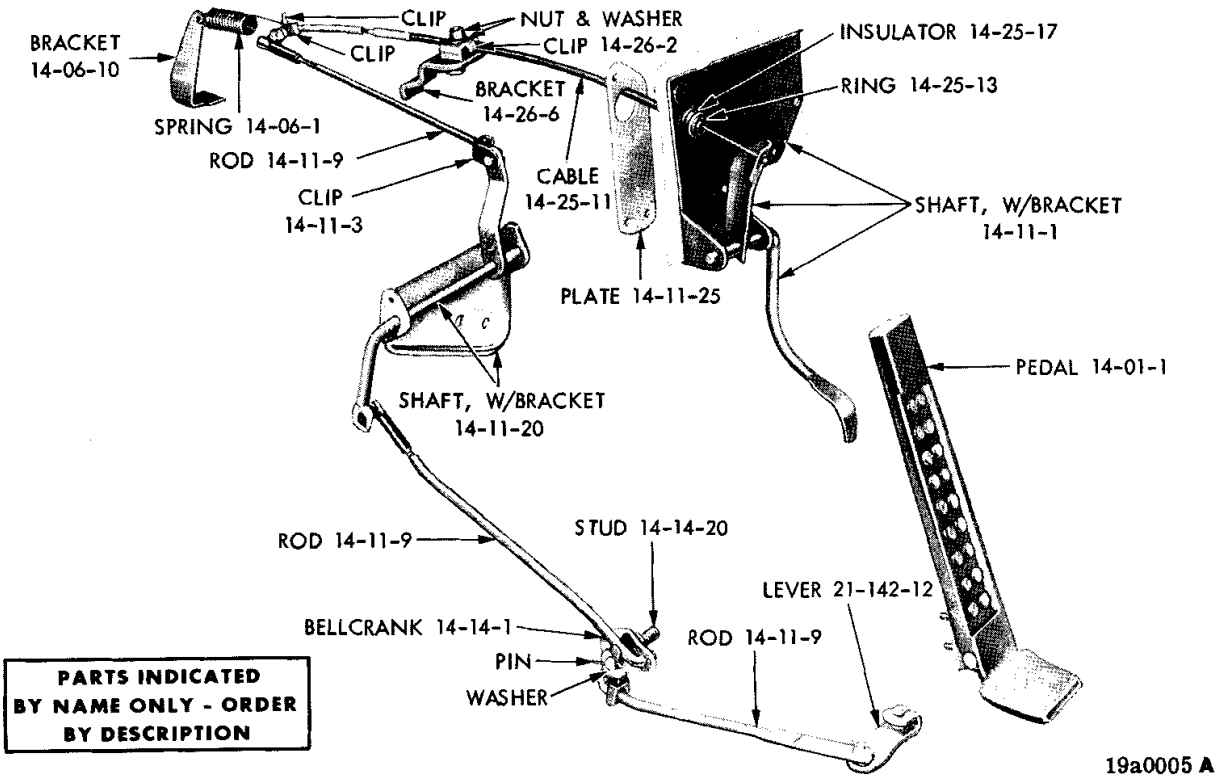

THROTTLE LINKAGE (V8 CYLINDER) - VALIANT AND DART (273 CU. IN. ENGINE)

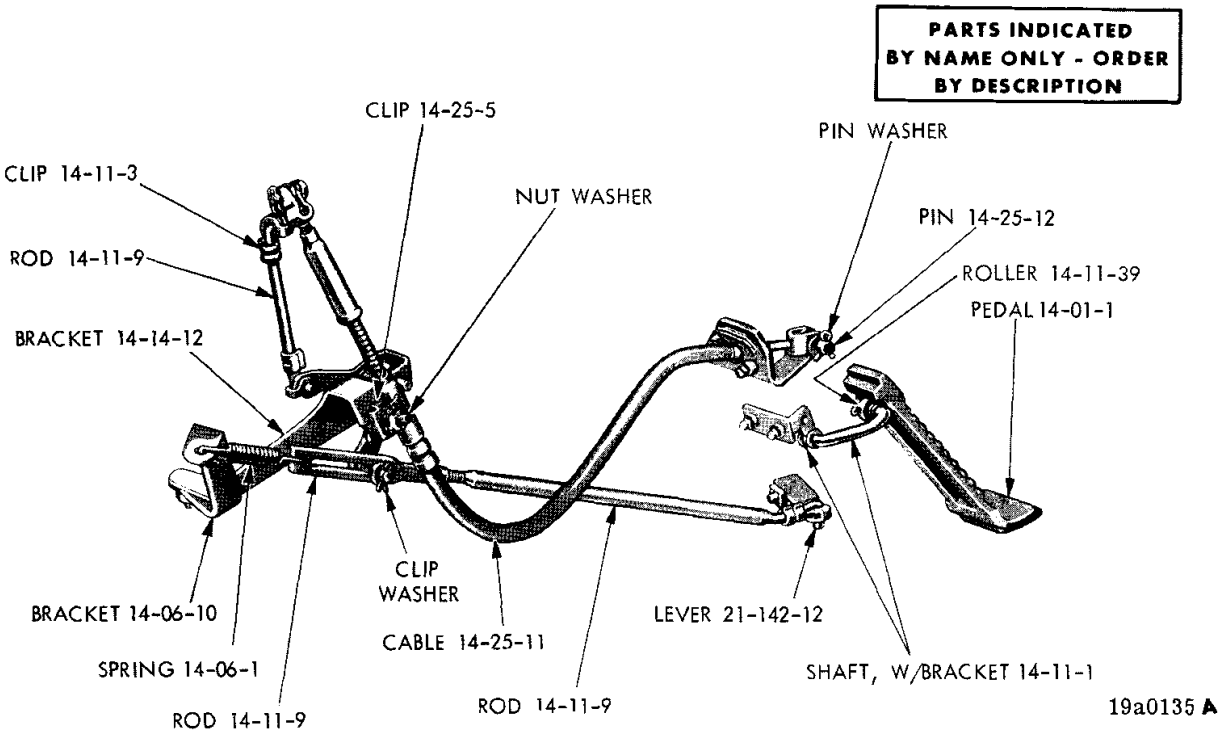

THROTTLE LINKAGE (6 CYLINDER) - BELVEDERE AND CORONET (225 CU. IN. ENGINE)

MyMopar.com

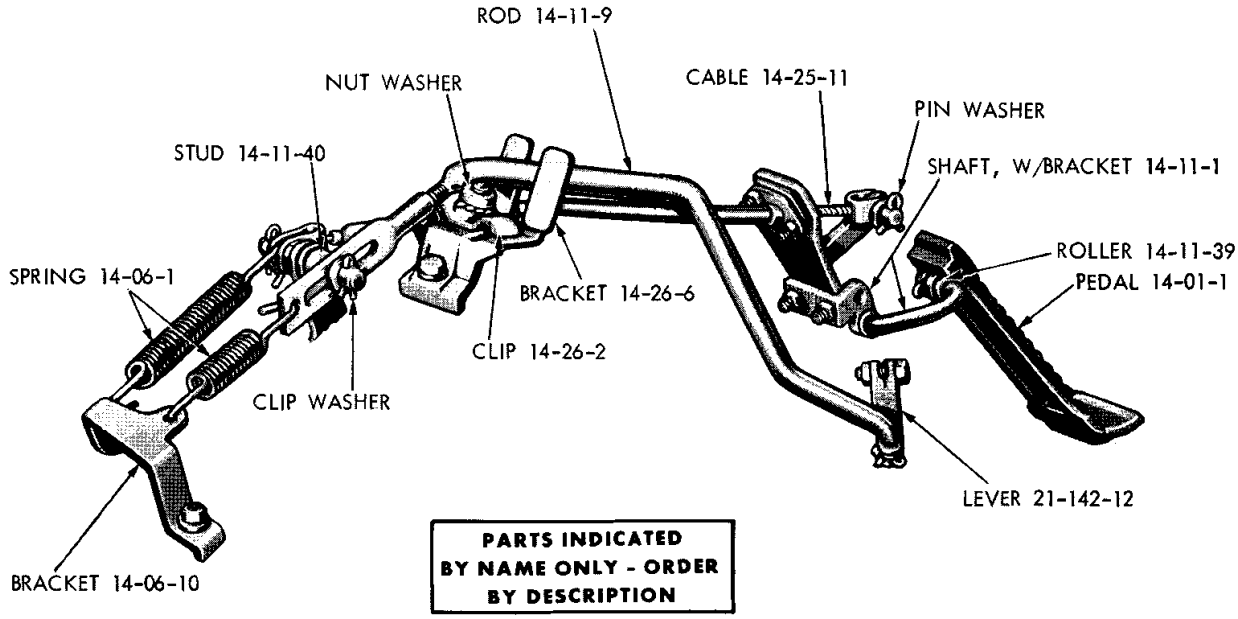

19a0137 A

THROTTLE LINKAGE (V8 CYLINDER) - BELVEDERE AND CORONET (273 CU. IN. ENGINE)

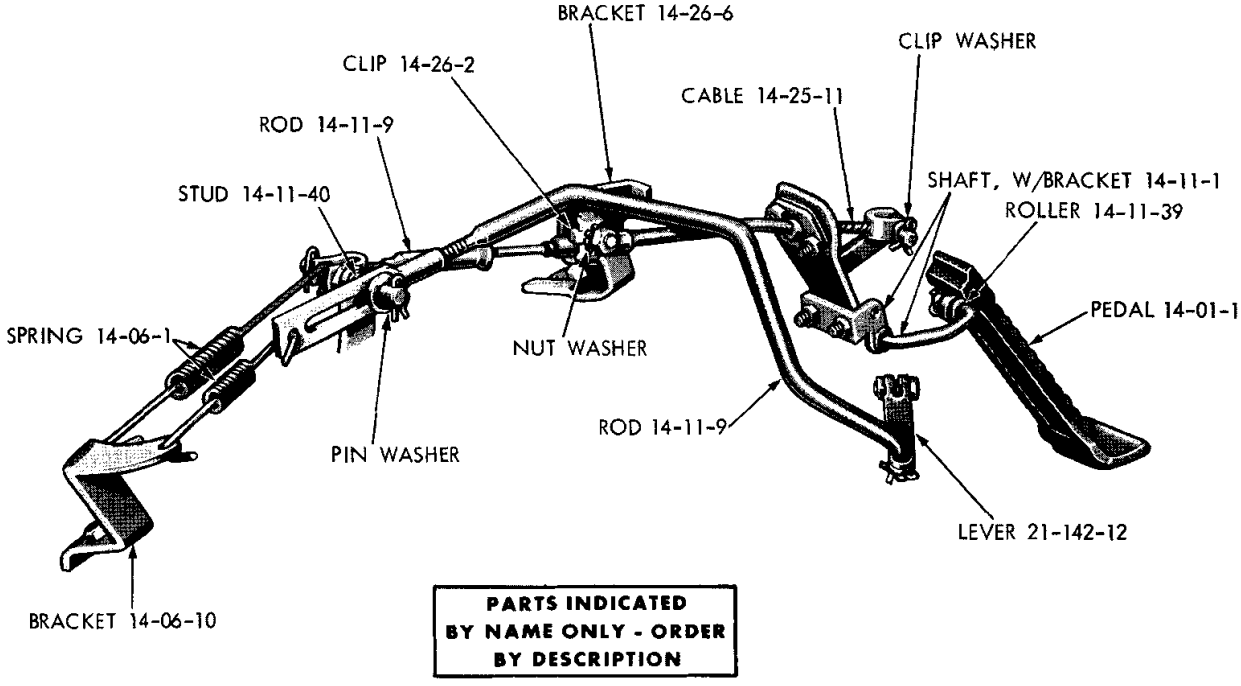

19a0139 A

THROTTLE LINKAGE (V8 CYLINDER) - BELVEDERE AND CORONET
(361, 383 AND 426 CU. IN. ENGINE)

MyMopar.com

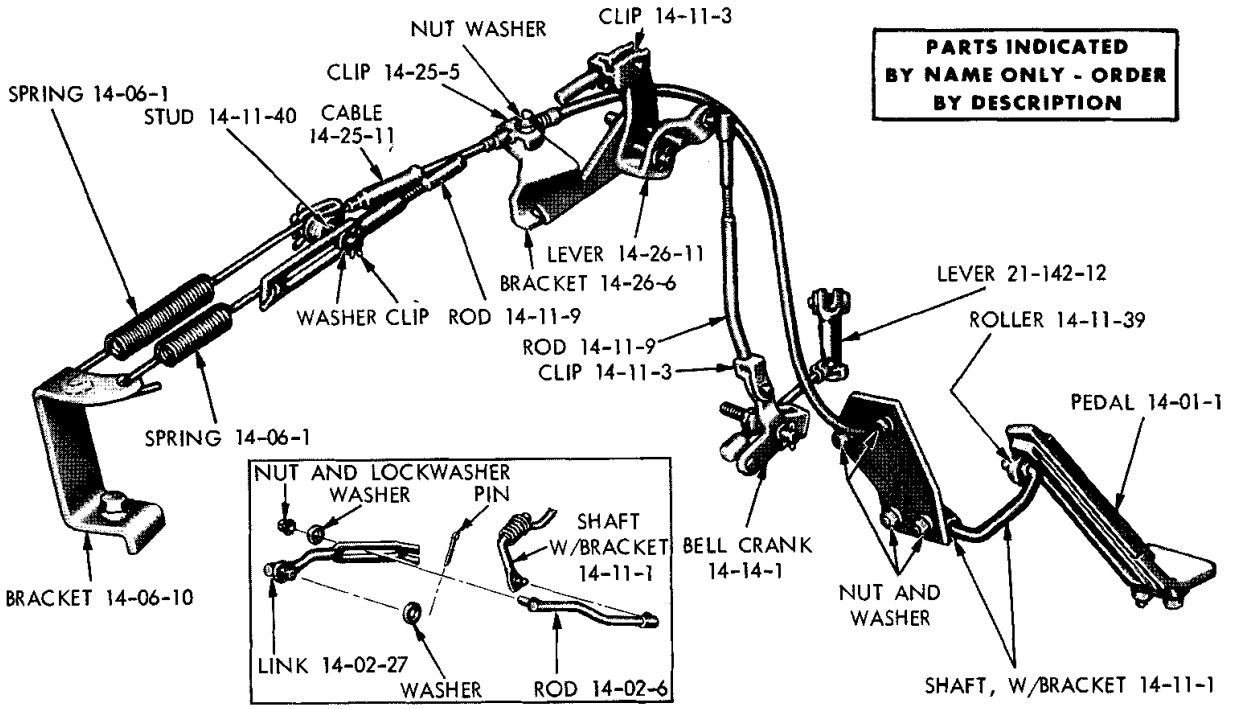

19a0136 A

THROTTLE LINKAGE (V8 CYLINDER) - PLYMOUTH AND DODGE

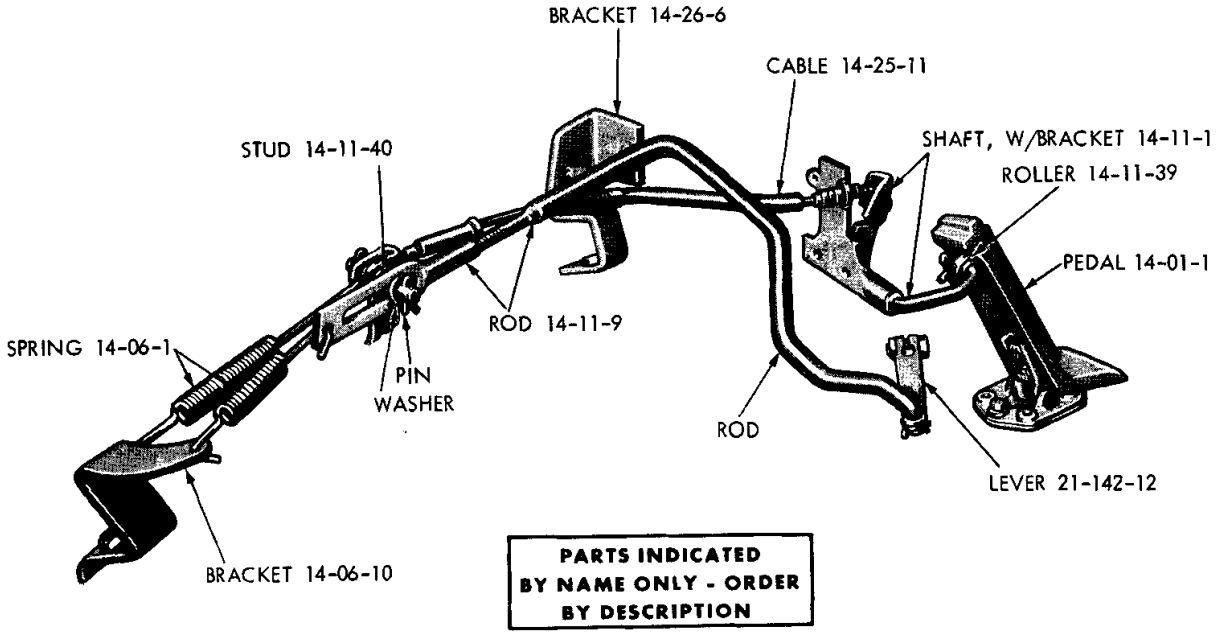

19a0138 A

THROTTLE LINKAGE - IMPERIAL

MyMopar.com

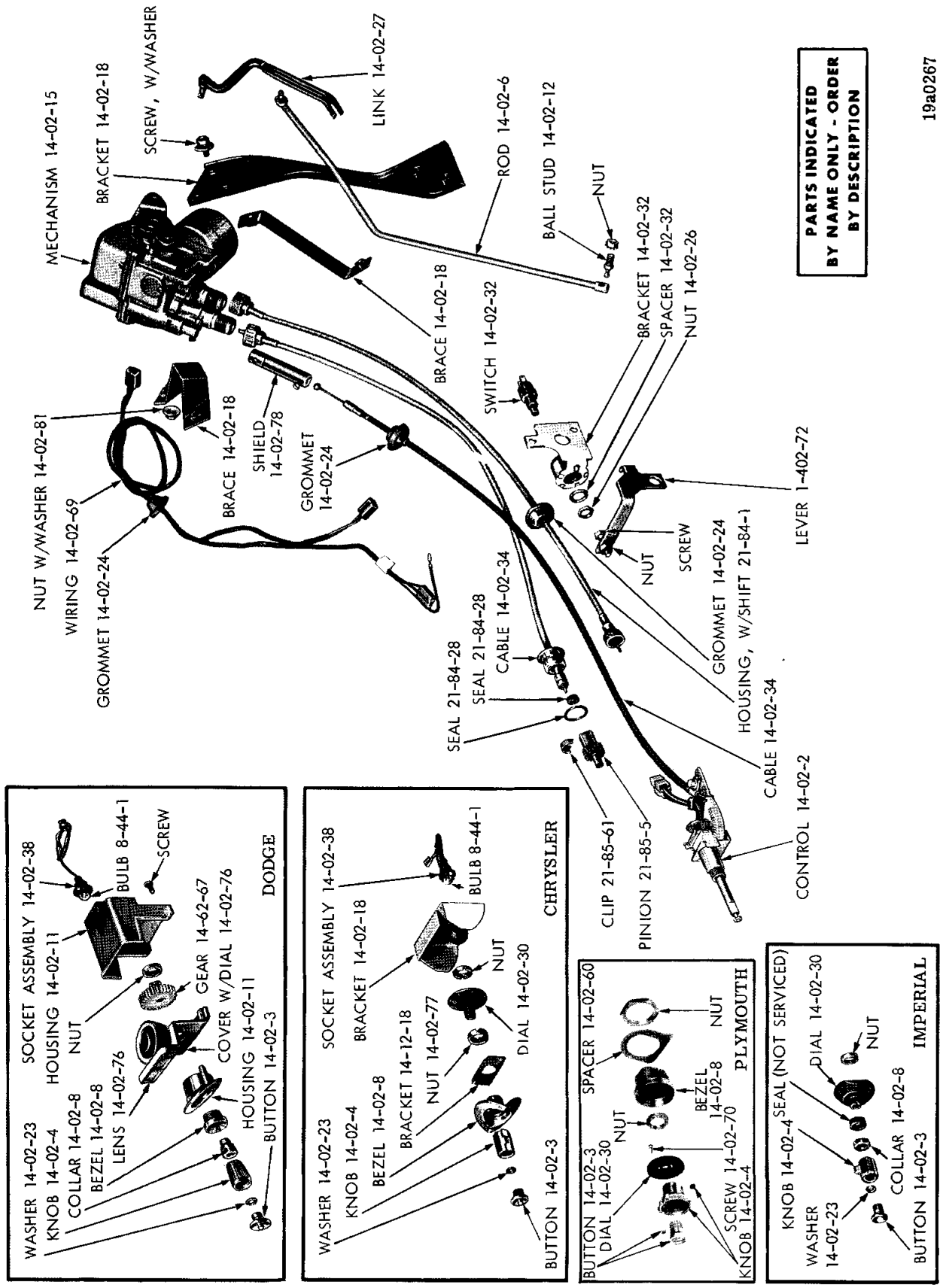
MECHANISM 14-02-15
BRACKET 14-02-18
SCREW, W/WASHER
LINK 14-02-27
ROD 14-02-6
BALL STUD 14-02-12
NUT
BRACKET 14-02-32
SPACER 14-02-32
NUT 14-02-26
PARTS INDICATED BY NAME ONLY - ORDER BY DESCRIPTION
19a0267
BRACE 14-02-18
SWITCH 14-02-32
NUT W/WASHER 14-02-81
WIRING 14-02-69
GROMMET 14-02-24
BRACE 14-02-18
SHIELD 14-02-78
GROMMET 14-02-24
LEVER 1-402-72
NUT
SCREW
GROMMET 14-02-24
HOUSING, W/SHIFT 21-84-1
SEAL 21-84-28
SEAL 21-84-28
CABLE 14-02-34
CABLE 14-02-34
CABLE 14-02-2
CONTROL 14-02-2
CLIP 21-85-61
PINION 21-85-5
AUTO PILOT SYSTEM
WASHER 14-02-23
KNOB 14-02-4
COLLAR 14-02-8
BEZEL 14-02-8
LENS 14-02-76
SOCKET ASSEMBLY 14-02-38
HOUSING 14-02-11
NUT
BULB 8-44-1
SCREW
GEAR 14-62-67
COVER W/DIAL 14-02-76
HOUSING 14-02-11
BUTTON 14-02-3
DODGE
WASHER 14-02-23
KNOB 14-02-4
BEZEL 14-02-8
BRACKET 14-12-18
NUT 14-02-77
SOCKET ASSEMBLY 14-02-38
BRACKET 14-02-18
BULB 8-44-1
NUT
DIAL 14-02-30
BUTTON 14-02-3
CHRYSLER
BUTTON 14-02-3
DIAL 14-02-30
NUT
SPACER 14-02-60
BEZEL 14-02-8
NUT
SCREW 14-02-70
KNOB 14-02-4
PLYMOUTH
KNOB 14-02-4
WASHER 14-02-23
SEAL (NOT SERVICED)
DIAL 14-02-30
NUT
COLLAR 14-02-8
BUTTON 14-02-3
IMPERIAL

MyMopar.com

NOTES

MyMopar.com

CODE	PART NAME AND DESCRIPTION	CYL	PER CAR	VALIANT / DART	PLYMOUTH BELVEDERE / DODGE CORONET	PLYMOUTH FURY / DODGE POLARA / CHRYSLER	IMPERIAL
14-01-0	**ACCELERATOR PEDAL**						
14-01-1	PEDAL	6	1	2532 339			
		8	1	2465 491			
			1	---- ---	2268 206		
			1	---- ---	---- ---	2468 728	
	w/BEZEL, Stainless Steel		1	---- ---	---- ---	2468 727	2463 766
	NUT		2	120 367	120 367	120 367	120 367
14-01-12	PIN, Hinge, w/CLIP		1	2463 765			
14-01-15	BRACKET, Pedal Hinge		1	2465 921			
	SCREW		2	6022 777			
14-01-16	LEVER, Pedal						
	w/o Auto. Pilot		1	---- ---	---- ---	---- ---	2463 773
	w/Auto. Pilot		1	---- ---	---- ---	---- ---	2463 863
14-01-22	SEAL, Pedal Lever, w/o Auto. Pilot		1	---- ---	---- ---	---- ---	2463 895
	w/Auto. Pilot		1	---- ---	---- ---	---- ---	1947 415
14-01-23	SCREW, Pedal Mounting		2	---- ---	2202 583	2202 583	
14-01-25	PLATE, Pedal Floor Pan		1	2465 494			
	Pedal Dash Panel		1	---- ---	2254 357		
	Pedal Mounting Reinforcement, on Floor Pan.		1	2081 074	2255 583		
	Dash Panel Linkage Mounting		1	---- ---	2254 357		
14-01-30	BUSHING, Pedal		2	1859 768	2406 334	2406 334	
14-01-31	INSULATOR, Accelerator Pedal Sound	6	1	1859 767			
14-01-38	SWIVEL, Pedal Lever		1	---- ---	---- ---	*2536 846	
14-01-39	RING, Pedal Lever Swivel Retaining		1	---- ---	*6026 098	*6026 098	
14-02-0	**AUTOMATIC PILOT**						
14-02-1	AUTOMATIC PILOT PACKAGE		1	---- ---	---- ---	---- ---	*2587 339
14-02-2	CONTROL, C, D2		1	---- ---	---- ---	2580 462	2580 462
	P		1	---- ---	---- ---	2497 210	
14-02-3	BUTTON, Control Reset, D2	8	1	---- ---	---- ---	2580 385	2426 658
	C		1	---- ---	---- ---	2580 550	
	P2	8	1	---- ---	---- ---	*2770 361	
14-02-4	KNOB, Control, C		1	---- ---	---- ---	2580 552	2426 656
	P		1	---- ---	---- ---	⊟2586 604	
	D	8	1	---- ---	---- ---	2580 394	
14-02-6	ROD, Accelerator Pedal to Auto. Pilot		1	---- ---	---- ---	---- ---	2463 796
	Auto. Pilot Lever to Auto. Pilot	8	1	---- ---	---- ---	2532 519	
	w/318 cu. in. Eng.	8	1	---- ---	---- ---	2536 228	
14-02-8	BEZEL, Control, C		1	---- ---	---- ---	2497 187	
	P2	8	1	---- ---	---- ---	2580 562	
	D2, Control Mounting	8	1	---- ---	---- ---	*2580 383	
	D2, Control	8	1	---- ---	---- ---	*2580 156	
	COLLAR, Control Dial, D	8	1	---- ---	---- ---	2580 384	2198 361
14-02-9	RETAINER, Lever to Rod	8	1	---- ---	---- ---	2121 571	
14-02-11	HOUSING, w/DIFFUSER, Auto Pilot Control, D2	8	1	---- ---	---- ---	2587 364	
14-02-12	BALL STUD, Carb. Lever to Trans. Rod	8	1	---- ---	---- ---	*1858 936	*1858 936

TYPE LETTERS Indicate: V - Valiant, L - Dart, R - Belvedere, W - Coronet, P - Plymouth, D - Dodge, C - Chrysler, Y - Imperial

★Indicates use as required. Numerals in parentheses ( ) refer to notes. Printed in U.S.A.
⊟Indicates parts not listed in any previous parts book. Prices and specifications subject to change without notice.
* Indicates change or addition.

MyMopar.com

CODE	PART NAME AND DESCRIPTION	CYL	PER CAR	VALIANT / DART	PLYMOUTH BELVEDERE / DODGE CORONET	PLYMOUTH FURY / DODGE POLARA / CHRYSLER	IMPERIAL
14-02-0	**AUTOMATIC PILOT - Cont'd**						
14-02-15	MECHANISM, Drive		1	---- ---	---- ---	2580 142	2580 142
14-02-18	BRACKET, Mechanism Mounting, P2, D2, C	8	1	---- ---	---- ---	2530 280	
			1	---- ---	---- ---	---- ---	2201 080
	Drive Mechanism to Hood Hinge		1	---- ---	---- ---	---- ---	2530 297
	Drive Mechanism to Dash		1	---- ---	---- ---	---- ---	2530 296
	Auto Pilot Control Mounting		1	---- ---	---- ---	2580 555	
	BRACE, Mechanism Mounting		1	---- ---	---- ---	2530 298	2409 021
	BRACE, Bracket Mounting P2, D2, C	8	1	---- ---	---- ---	*2530 277	
14-02-23	WASHER, Reset Button	8	1	---- ---	---- ---	1972 906	1972 906
14-02-24	GROMMET, Control Cable	8	1	---- ---	---- ---	2216 552	2216 552
14-02-26	NUT, Brake Switch Mounting, P2, D2, C	8	1	---- ---	---- ---	1886 313	1886 313
14-02-27	LINK, Accelerator Pedal Lever to Auto. Pilot.	8	1	---- ---	---- ---	2268 557	2268 557
14-02-29	LAMP, Control, P2	8	1	---- ---	---- ---	2496 350	
	C	8	1	---- ---	---- ---	2587 459	
14-02-30	DIAL, Control, C	8	1	---- ---	---- ---	⊟2586 981	⊟2587 350
	P	8	1	---- ---	---- ---	*2661 292	
	RING, Retainer, C	8	1	---- ---	---- ---	*6026 264	
14-02-32	SWITCH, Brake, w/BRACKET	8	1	---- ---	---- ---	2580 115	2497 796
14-02-34	CABLE, Drive Mechanism		1	---- ---	---- ---	---- ---	*2580 854
	Auto. Pilot, Trans. to Drive Mechanism	8	1	---- ---	---- ---	2580 854	
	Auto. Pilot Control	8	1	---- ---	---- ---	2497 213	
14-02-38	SOCKET, Auto. Pilot Lamp, C, D2	8	1	---- ---	---- ---	2097 003	
14-02-39	CONTACT, Control Lamp	8	1	---- ---	---- ---	2256 966	2256 966
14-02-63	DIFFUSER, Control Mounting Housing Light, D2	8	1	---- ---	---- ---	2427 533	
14-02-67	GEAR, Control Dial Drive, D2	8	1	---- ---	---- ---	2580 386	
14-02-69	WIRING, Auto Pilot Instrument Panel		1	---- ---	---- ---	---- ---	2497 807
14-02-70	SCREW, Control Dial, P2	8	2	---- ---	---- ---	2256 702	
14-02-72	LEVER, Brake Switch, P2, D2, C	8	1	---- ---	---- ---	2467 774	2461 504
14-02-75	SHAFT, Speedometer Cable Auto Pilot to Speedometer Drive, P2	8	1	---- ---	---- ---	1972 352	
14-02-76	COVER, w/DIAL, Auto Pilot Housing, D2	8	1	---- ---	---- ---	2587 365	
14-02-77	NUT, Auto Pilot Control Bezel Mounting, C	8	1	---- ---	---- ---	2580 557	
14-02-78	SHIELD, Control Cable Dust	8	1	---- ---	---- ---	2426 580	2426 580
14-02-80	SEAL, Auto Pilot Lever	8	1	---- ---	---- ---	2532 523	
14-02-81	NUT and WASHER, Mechanism Mounting	8	1	---- ---	---- ---	2076 232	2076 232
4-06-0	**ACCELERATOR PEDAL RETURN SPRING**						
14-06-1	SPRING, R, W, P, D, 30 Coils, Painted Blue	6	1	2402 590	2402 590	2402 590	
	R, W, P, D, 47 Coils, Painted Silver	6	1	2536 455	2536 455	2536 455	
	R, W, P, 30 Coils, Painted Orange	6	1	---- ---	2536 462	2536 462	

TYPE LETTERS indicate: V - Valiant, L - Dart, R - Belvedere, W - Coronet, P - Plymouth, D - Dodge, C - Chrysler, Y - Imperial

★Indicates use as required. Numerals in parentheses ( ) refer to notes. Printed in U.S.A.
⊟Indicates parts not listed in any previous parts book. Prices and specifications subject to change without notice.
March 1966 Supersedes May 1965. * Indicates change or addition.

MyMopar.com

CODE	PART NAME AND DESCRIPTION	CYL	PER CAR	VALIANT / DART	PLYMOUTH BELVEDERE / DODGE CORONET	PLYMOUTH FURY / DODGE POLARA / CHRYSLER	IMPERIAL
14-06-0	**ACCELERATOR PEDAL RETURN SPRING - Cont'd**						
14-06-1	SPRING - Cont'd						
	R, W, P, Auto. Trans. Rod Return, 19 Coils, Painted Black	6	1	---- ---	2536 453	2536 453	
	w/Governor	6	1	2264 376			
	18 Coils, Painted Maroon	8	1	2465 495			
	30 Coils, Painted Orange	8	1	2536 462			
	47 Coils, Painted Brown	8	1	---- ---	2536 454	2536 454	2536 454
	Auto. Trans. Rod Return, 19 Coils, Painted Black	8	1	---- ---	2536 453	2536 453	2536 453
	R, W, P, D, High Performance	8	1	---- ---	2265 027	2265 027	
	R2, W2, w/426 cu. in. Eng., Hemispherical, w/2-4 Barrel Carburetors, Painted Green	8	2	---- ---	2264 376		
14-06-10	BRACKET	6	1	2128 776			
	w/Air Conditioning	6	1	2264 686			
	w/2 Barrel Carburetor	8	1	2465 496			
	w/4 Barrel Carburetor	8	1	2465 985			
	w/o Governor	6	1	---- ---	*2658 756	*2658 756	
	w/Governor, 2" long	6	1	---- ---	*2268 188		
	w/Governor, 3-1/8" long	6	1	---- ---	*2658 757		
	w/Governor	6	1	---- ---	---- ---	*2658 757	
	361 cu. in. and 383 cu. in. Eng., w/2 Barrel Carburetor	8	1	---- ---	2536 834	2536 834	
	383 cu. in. Eng., w/4 Barrel Carburetor	8	1	---- ---	2536 835	2536 835	
	361 cu. in. and 383 cu. in. Eng., 2 Barrel Carburetor, w/Air Conditioning	8	1	---- ---	2532 384	2532 384	
	383 cu. in. Eng., 4 Barrel Carburetor, w/Air Conditioning	8	1	---- ---	2536 836	2536 836	
	413 cu. in. and 426 cu. in. Eng., 4 Barrel Carburetor, w/Air Conditioning	8	1	---- ---	---- ---	2536 836	
	R, W, w/426 cu. in. Eng., Hemispherical, w/2-4 Barrel Carburetors	8	2	---- ---	2536 216		
	P, D, w/318 cu. in. Eng.	8	1	---- ---	2658 307	2658 307	
	P, D, w/383 cu. in. Eng.	8	1	---- ---	---- ---	2532 357	
	P, w/426 cu. in. Eng.	8	1	---- ---	---- ---	2465 408	
	D, w/413 or 426 cu. in. Eng.	8	1	---- ---	---- ---	2465 408	
	w/o Air Conditioning		1	---- ---	---- ---	---- ---	2536 835
	w/Air Conditioning		1	---- ---	---- ---	---- ---	2536 836
14-07-0	**ACCELERATOR PEDAL TO ACCELERATOR SHAFT ROD**						
14-07-1	ROD, w/Auto. Trans	6	1	⊟2780 899			
	CLIP	6	1	*6023 285			
14-07-8	RETAINER, Accelerator Pedal Lever to Auto. Pilot Rod, 413 cu. in. Eng., w/o Air Conditioning, w/Auto. Pilot		1	---- ---	---- ---	---- ---	2121 571
	Pedal to Shaft Rod Ball Joint	6	1	2121 571			
14-07-15	SPRING, Accelerator Pedal to Accelerator Shaft Rod	6	1	⊟2806 400			
14-11-0	**ACCELERATOR SHAFT**						
14-11-1	SHAFT, w/Manual Trans.	6	1	2203 237			
	w/Auto. Trans.	6	1	2264 552			
		8	1	2465 498			
	w/Manual or Auto. Trans.		1	---- ---	2268 344.		

TYPE LETTERS Indicate: V - Valiant, L - Dart, R - Belvedere, W - Coronet, P - Plymouth, D - Dodge, C - Chrysler, Y - Imperial

★Indicates use as required. Numerals in parentheses ( ) refer to notes. Printed in U.S.A.
⊟Indicates parts not listed in any previous parts book. Prices and specifications subject to change without notice.
* Indicates change or addition. March 1966 Supersedes May 1965.

MyMopar.com

CODE	PART NAME AND DESCRIPTION	CYL	PER CAR	VALIANT / DART	PLYMOUTH BELVEDERE / DODGE CORONET	PLYMOUTH FURY / DODGE POLARA / CHRYSLER	IMPERIAL
14-11-0	**ACCELERATOR SHAFT - Cont'd**						
14-11-1	SHAFT - Cont'd						
	w/BRACKET, w/Auto Pilot	8	1	---- ---	---- ---	2532 521	2465 480
	w/BRACKET, Std.	8	1	---- ---	---- ---	2465 401	
	SHAFT, Torque, Partial	6	1	2465 477			
14-11-3	CLIP, Accelerator Shaft to Bell Crank Rod	6	1	2120 878			
	Bell Crank to Trans. Rod	6	1	2120 877			
	Carburetor to Eng. Bell Crank Rod	8	1	2463 871			
	Engine Bracket Shaft to Trans. Bell Crank Rod	8	1	2463 871	*2463 871		
	Trans. Bell Crank to Trans. Control Lever Rod	8	1	2463 871			
	Carburetor to Throttle Control Cable Mounting Bracket Lever Rod	8	1	---- ---	---- ---	2463 871	
	Torque Shaft to Bell Crank Rod End Spring	6	1	2120 878			
	Bell Crank to Carburetor Rod End Spring	6	1	1652 093	1652 093	1652 093	
	Bell Crank to Auto. Trans. Rod End Spring		1	667 774	667 774	667 774	
14-11-4	SEAL, Shaft	6	1	2402 339			
14-11-9	ROD, Accelerator Shaft to Bell Crank	6	1	2402 384			
	Bell Crank to Trans., w/o Slot	6	1	2120 814	2532 334		
	Bell Crank to Trans., w/SLOT	6	1	2202 428	2468 744		
	Bell Crank to Auto. Trans., w/170 cu. in. Eng., 25 1/2 long	6	1	2532 512			
	Eng. Bell Crank to Trans., 21-1/4 in. long	6	1	2532 584			
	Bell Crank to Auto. Trans., w/225 cu. in. Eng.	6	1	2532 514	2532 377		
	Bell Crank to Carburetor	6	1	2268 356	2268 356	2268 356	
	Bell Crank to Carburetor, w/Governor, 6 3/4 in. long	6	1	---- ---	2268 385	2268 385	
	Bell Crank to Carburetor, w/Governor, 5 7/8 in. long	6	1	---- ---	2536 153	2536 153	
	Bell Crank to Carburetor, Police and Taxi, 6 5/8 in. long	6	1	---- ---	2406 763		
	Bell Crank to Carburetor, Police and Taxi, 5 3/4 in. long	6	1	---- ---	2536 163		
	Carburetor to Bell Crank	8	1	2465 607			
	Carburetor to Eng. Bell Crank, 273 cu. in. Eng., w/2 Barrel Carburetor	8	1	2532 595			
	Carburetor to Eng. Bell Crank, 273 cu. in. Eng., w/4 Barrel Carburetor	8	1	2465 989			
	Trans. Bell Crank to Trans. Throttle Control Lever, w/273 cu. in. Eng.	8	1	2532 937			
	Engine Bracket Shaft to Trans. Bell Crank	8	1	2532 939			
	Carburetor Lever to Trans.	8	1	---- ---	2532 365		
	Carburetor Lever to Auto. Trans., w/273 cu. in. Eng.	8	1	---- ---	2532 349		
	Carburetor Lever to Auto. Trans., w/318 and 361 cu. in. Eng., w/2 Barrel Carburetor	8	1	---- ---	2532 355		
	Carburetor Lever to Trans., w/4 Barrel Carburetor	8	1	---- ---	2532 391		
	Carburetor to Trans., w/361 and 383 cu. in. Eng.	8	1	---- ---	2402 226		
	Cable Mounting Bracket Lever to Trans. Bell Crank	8	1	---- ---	---- ---	2465 431	
	Cable Mounting Bracket Lever to Trans. Bell Crank, 413 and 426 cu. in. Eng., w/4 Barrel Carburetor	8	1	---- ---	2465 419		

*TYPE LETTERS Indicate: V - Valiant, L - Dart, R - Belvedere, W - Coronet, P - Plymouth, D - Dodge, C - Chrysler, Y - Imperial

★Indicates use as required. Numerals in parentheses ( ) refer to notes. Printed in U.S.A.

⊟Indicates parts not listed in any previous parts book. Prices and specifications subject to change without notice.

March 1966 Supersedes May 1965. * Indicates change or addition.

MyMopar.com

CODE	PART NAME AND DESCRIPTION	CYL	PER CAR	VALIANT / DART	PLYMOUTH BELVEDERE / DODGE CORONET	PLYMOUTH FURY / DODGE POLARA / CHRYSLER	IMPERIAL
14-11-0	**ACCELERATOR SHAFT - Cont'd**						
14-11-9	ROD- Cont'd						
	Engine Bell Crank to Carburetor, w/426 cu. in. Eng., Hemispherical	8	2	---- ---	2536 222		
	Trans. Bell Crank to Trans.	8	1	---- ---	---- ---	2463 757	
	Carburetor to Cable Mounting Bracket Lever, P,D	8	1	---- ---	---- ---	2465 445	
	Carburetor to Cable Mounting Bracket Lever, 383 cu. in. Eng., w/2 Barrel Carburetor	8	1	---- ---	---- ---	2465 437	
	Carburetor to Cable Mounting Bracket Lever, 383 cu. in. Eng., w/4 Barrel Carburetor	8	1	---- ---	---- ---	2465 429	
	Carburetor to Cable Mounting Bracket Lever, w/413 and 426 cu. in. Eng., w/Air Conditioning	8	1	---- ---	---- ---	2465 417	
	Carburetor to Cable Mounting Bracket Lever, w/413 and 426 cu. in. Eng., w/o Air Conditioning	8	1	---- ---	---- ---	2532 541	
	Carburetor to Cable Mounting Bracket Lever, 318 cu. in. Eng., w/Auto. Trans.	8	1	---- ---	---- ---	2465 445	
	Carburetor to Cable Mounting Bracket Lever, w/SLOT P,D	8	1	---- ---	---- ---	2468 744	
	Carburetor Lever to Trans.		1	---- ---	---- ---	---- ---	2532 329
	Carburetor Lever to Trans., w/SLOT		1	---- ---	---- ---	---- ---	2468 744
14-11-10	STUD, Torque Shaft Ball	6	2	1858 936			
	Carburetor Lever Ball	8	2	---- ---	1858 936		
	Auto. Pilot Lever Ball	8	1	---- ---	---- ---	1858 936	
14-11-18	LINK, Bell Crank to Auto. Trans. Rod Adjusting	6	1	2202 428	2468 744		
	LINK, Carburetor Lever to Auto. Trans. Rod Adjusting	8	1	---- ---	2468 744	2468 744	2468 744
	LINK, Carburetor to Cable Mounting Bracket Lever Rod Adjusting	8	1	---- ---	---- ---	2468 744	
14-11-20	BRACKET, Shaft Support	6	1	2402 340			
	Shaft Engine	6	1	2465 608			
	Engine	8	1	2465 990			
14-11-25	PLATE, Shaft Bracket Tapping		1	2465 603			
	Shaft Bracket Stud Retainer		1	---- ---	---- ---	---- ---	2492 251
14-11-28	LEVER, Shaft	6	1	2264 539			
	Shaft Intermediate	6	1	2128 778			
14-11-30	INSULATOR, Shaft Sound	6	1	2128 347			
14-11-31	PLUG, Shaft Lever		1	2465 483	*2465 483	2465 483	2465 483
14-11-33	BUSHING, Shaft Seal	6	1	2120 525			
14-11-34	RING, Shaft Retaining	8	1	2532 363			
14-11-39	ROLLER, Shaft	8	1	---- ---	2268 346	2268 346	2268 346
14-11-40	STUD, Carburetor Lever	8	1	---- ---	2468 743	2468 743	2468 743
	CLIP		1	---- ---	6023 285	6023 285	6023 285
14-11-48	SEAL, Shaft Bracket		1	2465 623	---- ---	2465 959	2463 788

TYPE LETTERS Indicate: V - Valiant, L - Dart, R - Belvedere, W - Coronet, P - Plymouth, D - Dodge, C - Chrysler, Y - Imperial

★Indicates use as required. Numerals in parentheses ( ) refer to notes. Printed in U.S.A.
⊟Indicates parts not listed in any previous parts book. Prices and specifications subject to change without notice.
* Indicates change or addition.

March 1966 Supersedes May 1965.
MyMopar.com

CODE	PART NAME AND DESCRIPTION	CYL	PER CAR	VALIANT / DART	PLYMOUTH BELVEDERE / DODGE CORONET	PLYMOUTH FURY / DODGE POLARA / CHRYSLER	IMPERIAL
14-13-0	**THROTTLE LINKAGE BALL STUD**						
14-13-1	BALL STUD, Carburetor Lever, R2, W2, P2, D2	8	1	2268 420	2268 420	2268 420	
	Carburetor Lever, R2, W2, Hemispherical	8	2	---- ---	2536 806		
	Accelerator Pedal Lever		1	---- ---	---- ---	---- ---	1858 936
14-13-3	CLIP, Ball Stud Retainer		★	2121 571	2121 571	2121 571	2121 571
14-13-5	RETAINER, Ball Stud, Threaded		★	2268 367	2268 367	2268 367	2268 367
	w/Auto. Trans, w/318 cu. in. Eng.		★	---- ---	---- ---	*1945 197	
14-13-6	C-NUT, Dash Panel Throttle Linkage Bracket	6	3	327 072			
14-14-0	**THROTTLE CONTROL BELL CRANK**						
14-14-1	BELL CRANK	6	1	2203 239			
	V2, L2, at Trans.	8	1	2532 936			
	R2, W2, w/426 cu. in. Eng., Std.	8	1	---- ---	2468 456		
	At Trans.	8	1	---- ---	---- ---	2465 420	
	R2, W2, w/426 cu. in. Eng., Hemispherical.		1	---- ---	2536 219		
14-14-8	PIN, Bell Crank	6	1	2465 472			
	Bell Crank to Cable	8	1	---- ---	2402 806		
14-14-12	BRACKET, Bell Crank	6	1	2465 471	2532 332	2532 332	
	BRACKET, Bell Crank to Auto. Trans. Rod Return Spring, P, D	6	1	---- ---	2532 335	2532 335	
	Eng. Bell Crank Mounting	6	1	2532 508			
14-14-13	NUT, Bell Crank Bracket, W1	6	2	2073 205	2073 205	2073 205	
14-14-16	RING, Throttle Control Bell Crank Pin Retaining	6	1	1626 749			
14-14-20	STUD, Bell Crank	8	1	2465 616	*2658 286	2463 883	
	P	6	1	---- ---	2468 743	2468 743	
14-14-41	PLATE, Bell Crank Tapping	6	1	2465 473			
14-14-42	SCREW, Accelerator Pedal Mounting	8	2	---- ---	2202 583	2202 583	
14-14-56	BUSHING, Throttle Control Bell Crank	6	1	1859 768			
14-14-57	INSULATOR, Throttle Control Bell Crank Sound	6	1	1859 767			
14-24-0	**FAST IDLE CABLE**						
14-24-1	CABLE	8	1	---- ---	917 248	917 248	
14-24-4	COLLAR, Cable		2	---- ---	*2536 847	*2536 847	
14-24-5	PIN, Cable		1	---- ---	2268 679		
14-24-6	BRACKET, Cable, P1	6	1	---- ---	---- ---	2532 392	
	C	8	1	---- ---	---- ---	2532 393	
14-25-0	**THROTTLE CONTROL CABLE**						
14-25-5	CLIP, Cable		1	2402 210	2402 210	2402 210	2402 210
14-25-10	SHIELD, Trans. Control Cable	8	1	2532 913			
14-25-11	CABLE, V2, L2	8	1	*2658 400			
	w/Air Conditioning	6	1	2532 529			
	w/225 cu. in. Eng., P1	6	1	---- ---	---- ---	*2532 525	

TYPE LETTERS Indicate: V - Valiant, L - Dart, R - Belvedere, W - Coronet, P - Plymouth, D - Dodge, C - Chrysler, Y - Imperial

★Indicates use as required. Numerals in parentheses ( ) refer to notes. Printed in U.S.A.

⊟Indicates parts not listed in any previous parts book. Prices and specifications subject to change without notice.

March 1966 Supersedes May 1965. * Indicates change or addition.

MyMopar.com

CODE	PART NAME AND DESCRIPTION	CYL	PER CAR	VALIANT / DART	PLYMOUTH BELVEDERE / DODGE CORONET	PLYMOUTH FURY / DODGE POLARA / CHRYSLER	IMPERIAL
14-25-0	**THROTTLE CONTROL CABLE - Cont'd**						
14-25-11	CABLE - Cont'd						
	Except Police and Taxi	6	1	---- ---	2465 924	2465 924	
	w/2 Barrel Carburetor	8	1	---- ---	---- ---	*2532 528	
	w/4 Barrel Carburetor	8	1	---- ---	---- ---	*2532 528	
	383, 413 and 426 cu. in. Eng	8	1	---- ---	---- ---	*2532 528	
	R1, W1, Police and Taxi, P1, D1, Taxi	6	1	---- ---	2465 925	2465 925	
	R2, W2	8	1	---- ---	2465 926		
	w/383 cu. in. Eng.	8	1	---- ---	⊟2536 779		
	R2, W2, w/426 cu. in. Eng.	8	1	---- ---	2465 924		
	w/413 or 426 cu. in. Eng.	8	1	---- ---	---- ---	2532 528	
			1	---- ---	---- ---	---- ---	2465 485
14-25-12	PIN, Cable		1	2264 706	2264 706	2264 706	
14-25-13	RING, Cable Retainer		1	1884 405	1884 405	1884 405	1884 405
14-25-17	INSULATOR, Cable Sound		1	2465 486	2465 928	2465 486	2465 486
14-26-0	**THROTTLE CONTROL MOUNTING BRACKET**						
14-26-1	LEVER	8	1	---- ---	---- ---	2465 442	
14-26-2	CLIP, Cable	8	1	---- ---	2264 741		
14-26-3	SCREW, w/WASHER, Mounting Bracket	8	1	---- ---	⊟6022 225		
14-26-6	BRACKET, Cable Mounting	8	1	2465 604			
	w/4 Barrel Carburetor	8	1	2465 986			
		6	1	---- ---	2448 746	2448 746	
	R2, W2	8	1	---- ---	2402 257		
	w/273 cu. in. Eng., w/2 Barrel Carburetor		1	---- ---	2532 346		
	R2, W2, w/426 cu. in. Eng., w/2-4 Barrel Carburetors, Hemispherical Eng.	8	1	---- ---	2536 217		
	w/426 cu. in. Eng., w/4 Barrel Carburetor	8	1	---- ---	2532 396		
	P, D	8	1	---- ---	---- ---	2465 439	
			1	---- ---	---- ---	---- ---	2463 789
	w/361 cu. in. Eng.	8	1	---- ---	2532 386		
	w/383 cu. in. Eng.	8	1	---- ---	2532 388		
	P, D, w/225 cu. in. Eng.	6	1	---- ---	2536 150	2536 150	
	Partial, P, D, w/413 and 426 cu. in. Eng.	8	1	---- ---	---- ---	2465 410	
	Partial, w/383 cu. in. Eng., 2 Barrel Carburetor	8	1	---- ---	---- ---	2465 433	
	Partial, w/383 cu. in. Eng., 4 Barrel Carburetor	8	1	---- ---	---- ---	2465 425	
14-26-11	LEVER, Cable Mounting Bracket, w/318 cu. in. Eng., P, D	8	1	---- ---	---- ---	2465 442	
	Except 318 cu. in. Eng., P, D	8	1	---- ---	---- ---	2465 413	
14-29-0	**CARBURETOR AIR CLEANER**						
14-29-2	AIR CLEANER, w/o Governor, Oil Bath	6	1	2463 662	2463 662	2463 662	
	w/o Governor, Dry Type	6	1	*2402 704	*2402 704	*2402 704	
	w/FITTING, use with Air Cleaner to Breather Pipe Hose	6	1	2463 931	2463 931	2463 931	
	w/FITTING, w/2 Barrel Carburetor, V, L, R, W, w/273 cu. in. Eng., P, w/318 cu. in. Eng. (also use 1-2465 764 Air Cleaner fitting Cap)	8	1	2463 900	2463 900	2463 900	
	Unsilenced, w/2 Barrel Carburetor, w/273 cu. in. Eng., Barracuda	8	1	2465 310			
	w/FITTING, use w/Air Cleaner to Breather Pipe Hose, w/273 cu. in., w/2 Barrel Carburetor, Barracuda	8	1	2465 546			

TYPE LETTERS Indicate: V - Valiant, L - Dart, R - Belvedere, W - Coronet, P - Plymouth, D - Dodge, C - Chrysler, Y - Imperial

★Indicates use as required. Numerals in parentheses ( ) refer to notes. Printed in U.S.A.

⊟Indicates parts not listed in any previous parts book. Prices and specifications subject to change without notice.

* Indicates change or addition.

MyMopar.com

CODE	PART NAME AND DESCRIPTION	CYL	PER CAR	VALIANT / DART	PLYMOUTH BELVEDERE / DODGE CORONET	PLYMOUTH FURY / DODGE POLARA / CHRYSLER	IMPERIAL
14-29-0	**CARBURETOR AIR CLEANER - Cont'd**						
14-29-2	AIR CLEANER - Cont'd						
	w/FITTING, w/2 Barrel Carburetor, w/273 and 318 cu. in. Eng. (Oil Bath)	8	1	*2463 969	*2463 969		
	R, W, w/361 cu. in. Eng., P, D, C1, w/383 cu. in. Eng., w/2 Barrel Carburetor Silenced	8	1	---- ---	2402 672	2402 672	
	D, w/383 or 413 cu. in. Eng., C1, C2, w/383 cu. in. Eng., C3, w/413 cu. in. Eng., w/4 Barrel Carburetor, Silenced	8	1	---- ---	---- ---	2402 672	2402 672
	R, W, w/361 cu. in. Eng., P, D, C1, w/383 cu. in. Eng., w/2 Barrel Carburetor, Silenced, Calif. Only	8	1	---- ---	2463 951	2463 951	
	D, w/383 or 413 cu. in. Eng., C1, C2, w/383 cu. in. Eng., w/4 Barrel Carburetor, Silenced, Calif. Only	8	1	---- ---	---- ---	2463 951	
	P, D, R, W, w/383 cu. in. Eng., w/4 or 2 Barrel Carburetor, Unsilenced, Package. . .	8	1	---- ---	*2465 156	*2465 156	
14-29-3	GASKET, Oil Chamber Upper, w/Oil Bath Cleaner	6	1	2128 879	2128 879	2128 879	
	Lower, w/Oil Bath Cleaner	6	1	1821 144	1821 144	1821 144	
	Air Cleaner Adapter, w/Oil Bath Cleaner . .	6	1	2128 661	2128 661	2128 661	
	w/273 or 318 cu. in. Eng.	8	1	*2128 661	*2128 661		
14-29-4	GASKET, Air Cleaner Cover, w/273 or 318 cu. in. Eng.	8	1	2402 129	2402 129	2402 129	
	Except 273 and 318 cu. in. Eng.	8	1	---- ---	2536 016	2536 016	
14-29-5	GASKET, Air Cleaner to Carburetor, w/170 and 225 cu. in. Eng	6	1	*1947 797	*1947 797	1947 797	
		8	1	1821 170	1821 170	1821 170	1821 170
	w/426 cu. in. Eng.	8	2	---- ---	2465 163		
14-29-6	FILTER	6	1	2206 376	2206 376	2206 376	
	w/2 Barrel Carburetor, w/273 or 318 cu. in. Eng.	8	1	1739 547	1739 547	1739 547	
	w/2 or 4 Barrel Carburetor, w/361, 383, 413, 426 cu. in. Eng.	8	1	---- ---	2402 677	2402 677	2402 677
	w/2-4 Barrel Carburetor, w/426 cu. in. Eng., Hemispherical	8	1	---- ---	2468 987		
	w/2 or 4 Barrel Carburetor, w/Unsilenced Air Cleaner except 426 cu. in. Eng.	8	1	1946 923	1946 923	1946 923	
	w/170 or 225 cu. in. Eng., w/Air Cleaner to Breather Pipe Hose	6	1	*2463 983	*2463 983	*2463 983	
	w/273 or 318 cu. in. Eng., w/Air Cleaner to Breather Pipe Hose	8	1	*2463 984	*2463 984	*2463 984	
	w/361, 383, 413, cu. in. Eng., w/ Air Cleaner to Breather Pipe Hose	8	1	---- ---	*2463 985	*2463 985	*2463 985
14-29-7	COVER, Air Cleaner, w/273 cu. in. Eng., Chrome, w/o Name Plate	8	1	*2532 609			
	w/273 cu. in. Eng., w/4 Barrel Carburetor, use w/Air Cleaner to Breather Pipe Hose, Chrome	8	1	*2532 616			
	w/273 cu. in. Eng., use w/o Air Cleaner to Breather Pipe Hose, Barracuda	8	1	*2205 924			
	w/426 cu. in. Eng., Hemispherical, w/Fitting for Air Cleaner to Breather Pipe Hose, when used w/o Hose use 1-2465 764 Fitting Cap, Chrome	8	1	---- ---	2536 784		
	w/361, 383, cu. in. Eng., R, W, P, D, C1, w/2 Barrel Carburetor, D, C2, C3, w/413 cu. in. Eng., w/4 Barrel Carburetor, use w/Air Cleaner to Breather Pipe Hose, w/Snorkel	8	1		*2463 952	*2463 952	*2463 952

TYPE LETTERS Indicate: V - Valiant, L - Dart, R - Belvedere, W - Coronet, P - Plymouth, D - Dodge, C - Chrysler, Y - Imperial

★Indicates use as required. Numerals in parentheses ( ) refer to notes. Printed in U.S.A.

⊟Indicates parts not listed in any previous parts book. Prices and specifications subject to change without notice.

March 1966 Supersedes May 1965. • Indicates change or addition.

MyMopar.com

CODE	PART NAME AND DESCRIPTION	PER CAR	VALIANT / DART	PLYMOUTH BELVEDERE / DODGE CORONET	PLYMOUTH FURY / DODGE POLARA / CHRYSLER	IMPERIAL
14-29-0	**CARBURETOR AIR CLEANER - Cont'd**					
14-29-7	COVER - Cont'd					
	Except 318 cu. in. Eng., w/FITTING for Air Cleaner to Breather Pipe Hose, w/o Snorkel		1	*2463 932	*2463 932	*2463 932
	w/426 cu. in. Eng., w/4 Barrel Carburetor, Chrome, P, D	8	1	---- ---	2463 958	2463 958
	w/361, 383, cu. in. Eng., D, C1, w/2 Barrel Carburetor, D, C1, C2, w/383 cu. in. Eng., D, C3, w/413 cu. in. Eng., w/4 Barrel Carburetor	8	1	---- ---	2402 673	2402 673	2402 673
14-29-9	RETAINER, Air Cleaner Filter w/426 cu. in. Eng., P, D	8	1	---- ---	2463 959	2463 959	
	Except 426 cu. in. Eng.	8	1	---- ---	2402 678	2402 678	2402 678
14-29-10	ADAPTER, Air Cleaner to Carburetor, w/Oil Bath Cleaner	6	1	2129 000	2129 000	2129 000	
	R, W, P, w/Oil Bath Cleaner	8	1	*2202 836	2202 836	2202 836	
14-29-11	CAP, Air Cleaner Connector		1	2465 764	2465 764	2465 764	
14-29-15	CLAMP, w/Dry Cleaner	6	1	2264 116	2264 116	2264 116	
	w/Oil Bath Cleaner	6	1	2402 707	2402 707	2402 707	
14-29-28	PLATE, Element Support, w/426 cu. in. Eng., Hemispherical	8	1	---- ---	2536 796		
	Except 426 cu. in. Eng.	8	1	2465 159	2465 159	2465 159	
14-29-33	STUD, Cleaner to Carburetor	8	1	1826 286	1826 286	1826 286	1826 286
	WING NUT, Chrome	8	1	*219 281			
14-29-40	WRAP, Filter, California Usage	6	1	2463 980	2463 980	2463 980	
	V, L, R, W, P, California Usage	8	1	2463 981	2463 981	2463 981	
	R, W, P, D, C, Y, Silenced, California Usage	8	1	---- ---	2463 982	2463 982	2463 982

14-30-0 CARBURETOR

The entire line of carburetors for 1965 Chrysler Corporation passenger vehicles is listed on the following chart by vendor number.

Complete replacement assemblies for each vendor identified carburetor are listed in the "Chrysler Carburetor" column.

Components of carburetors which are available for service are charted on the following pages, beginning at Code 14-30-2. For quick reference, both the carburetor assemblies and their component listings are identified with the same "Component Chart Reference Number." (see below and on the following pages).

14-30-1 CARBURETOR ASSEMBLIES

Models	Eng. (cu. in.)	Trans.	Bbl.	Carburetor Type: Mfg.	Carburetor Type: Mfg. No.	Comp. Chart Ref. No.	Chrysler Service Carburetor No.
V1, L1, w/Air Conditioning	170	Auto.	1	Holley	R3056A	1	2468 759
V1, L1, w/o Air Conditioning	170	Manual	1	Holley	R3053A	2	2468 756
V1, L1, w/o Air Conditioning	170	Manual	1	Carter	3833S	3	2468 751
V1, L1, w/o Air Conditioning	170	Auto	1	Carter	3834S	4	2468 752
V1, L1, w/o Air Conditioning	170	Auto	1	Holley	R3054A	5	2468 757
V1, L1, w/Air Conditioning	170	Manual	1	Holley	R3055A	6	2468 758
V1, L1, w/Air Conditioning	170	Manual	1	Holley	R3149A	44	2536 212
V1, L1, w/Air Conditioning	170	Manual	1	Carter	3835S	7	2468 765
V1, L1, w/Air Conditioning	170	Manual	1	Carter	3964S	41	2536 207
V1, L1, w/Air Conditioning	170	Auto.	1	Carter	3836S	8	2468 766
V1, L1, w/Air Conditioning	170	Auto.	1	Holley	R3150A	42	2536 213

TYPE LETTERS Indicate: V - Valiant, L - Dart, R - Belvedere, W - Coronet, P - Plymouth, D - Dodge, C - Chrysler, Y - Imperial

★Indicates use as required. Numerals in parentheses ( ) refer to notes. Printed in U.S.A.

⊟Indicates parts not listed in any previous parts book. Prices and specifications subject to change without notice.

* Indicates change or addition.

March 1966 Supersedes May 1965.

MyMopar.com

14-30-0 CARBURETOR - Cont'd

14-30-1 CARBURETOR ASSEMBLIES - Cont'd

Models	Eng. (cu. in.)	Trans.	Bbl.	Carburetor Type Mfg.	Carburetor Type Mfg. No.	Comp. Chart Ref. No.	Chrysler Service Carburetor No.
V1, L1, w/o Air Conditioning	225	Manual	1	Holley	R3057A	9	2468 760
V1, L1, w/o Air Conditioning	225	Auto.	1	Holley	R3058A	10	2468 760
V1, L1, w/o Air Conditioning	225	Manual	1	Carter	3837S	11	2468 753
V1, L1, w/o Air Conditioning	225	Auto.	1	Carter	3838S	12	2468 753
V1, L1, R1, W1, P1	225	Manual	1	Carter	3839S	13	2468 767
V1, L1, R1, W1, P1	225	Auto.	1	Carter	3840S	14	2468 767
V1, R1, W1, P1	225	Manual	1	Holley	R3059A	15	2468 762
V1, R1, W1, P1	225	Auto.	1	Holley	R3060A	16	2468 762
R1, W1, P1, Taxi	225	All	1	Carter	3841S	17	2468 769
V2. L2, R2, W2	273	Manual	2	Bendix	3-248	18	2468 774
V2, L2, R2, W2	273	Auto.	2	Bendix	3-249	19	2468 774
V2, L2, R2, W2	273	Manual	2	Carter	3843S	20	2468 779
V2, L2, R2, W2	273	Auto.	2	Carter	3844S	21	2468 779
V2, L2	273	Manual	4	Carter	3853S	22	2532 309
V2, L2	273	Auto.	4	Carter	3854S	23	2532 309
R2, W2, P2, D2	318	Manual	2	Carter	3847S	24	2468 791
R2, W2, P2, D2	318	Auto.	2	Carter	3848S	25	2468 791
R2, W2, P2, D2	318	Manual	2	Bendix	WW3-250	26	2468 796
R2, W2, P2, D2	318	Auto.	2	Bendix	WW3-251	27	2468 796
R2, W2	361	All	2	Carter	3849S	28	*2536 885
R2, W2	361	All	2	Carter	3850S	43	⊟2532 327
R2, W2	361	Auto.	2	Carter	4127S	48	*2536 885
R2, W2, P2, D2, C	361 or 383	All	2	Bendix	WWC3-254	29	2532 303
R2, W2	361	Auto.	2	Bendix	WWC3-255	30	*2536 898
R2, W2, P2, D2, C1, C2	361 or 383	Auto.	2	Bendix	WWC3-262	46	*2536 898
R2, W2	383 or 426	Manual	4	Carter	3859S	31	2532 316
R2, W2	361	Manual	2	Carter	4125S	47	*2536 885
R2, W2	383 or 426	Auto.	4	Carter	3860S	32	2532 316

TYPE LETTERS Indicate: V - Valiant, L - Dart, R - Belvedere, W - Coronet, P - Plymouth, D - Dodge, C - Chrysler, Y - Imperial

★Indicates use as required. Numerals in parentheses ( ) refer to notes. Printed in U.S.A.

⊟Indicates parts not listed in any previous parts book. Prices and specifications subject to change without notice.

March 1966 Supersedes May 1965. * Indicates change or addition.

MyMopar.com

14-30-0 CARBURETOR - Cont'd

14-30-1 CARBURETOR ASSEMBLIES - Cont'd

Models	(cu. in.) Eng.	Trans.	Bbl.	Carburetor Type Mfg.	Carburetor Type No. Mfg.	Comp. Chart No. Ref.	Chrysler Service Carburetor No.
P2, D2, C1, C2	383	All	2	Carter	3849S	28	*2536 885
P2, D2, C1	383	Manual	2	Carter	4125S	47	*2536 885
R2, W2, Hemispherical	426	All	2/4	Carter	3861SA	33	2532 320
R2, W2, Hemispherical	426	All	2/4	Holley	R3116A	40	2536 135
P2, D2, C2	383	Manual	4	Carter	3855S	34	2532 305
P2, D2, C2	383	Auto.	4	Carter	3856S	35	2532 305
P2, D2, C2	413 or 426	Manual	4	Carter	3859S	31	2532 316
P2, D2	426	Auto.	4	Carter	3860S	32	2532 316
Y1	413	Auto.	4	Carter	3871S	36	2532 312
V1, L1, w/Air Conditioning	225	Manual	1	Carter	3966S	37	2536 209
V1, L1, w/o Air Conditioning	225	Auto.	1	Holley	R3152A	45	*2536 214
V1, L1, w/Air Conditioning	225	Manual	1	Holley	R3151A	38	2536 214
D2, C3	413	Auto.	4	Carter	3858S	39	2532 302
NUT, Mounting (6 cyl.)	---	----	-	-----	-----	--	* 120 369
(8 cyl.)	---	----	-	-----	-----	--	* 120 368

PART TYPE	COMPONENT CHART REFERENCE NO.	1	2		3	4	5	6	7
CODE	MFG. NO.	R3056A	R3053A	3833S		3834S	R3054A	R3055A	3835S
14-30-2	GASKET, Flange	2205 582	2205 582	2205 582		2205 582	2205 582	2205 582	2205 582
14-30-4	REPAIR PACKAGE	2585 462	2585 462	2448 977		2585 425	2585 462	2585 462	2448 977
	REPAIR PACKAGE, Major	---- ---	⊟2808 076	---- ---		---- ---	⊟2808 077	---- ---	---- ---
	ZIP KIT	---- ---	---- ---	2495 987		2495 987	---- ---	---- ---	2495 987
14-30-7	GASKET PACKAGE	2585 463	2585 463	2448 978		2448 981	2585 463	2585 463	2448 978
14-30-8	NEEDLE, w/SEAT, Float .	2299 042	2299 042	2448 975		2448 975	2299 042	2299 042	2448 975
14-35-1	JET, Main Metering	2299 248	2299 239	2299 251		2299 005	2299 248	2299 239	2299 251
14-35-33	STEM, Economizer	2525 784	2525 784	---- ---		---- ---	2525 784	2525 784	---- ---
14-35-39	WELL, Main	2525 785	2585 464	---- ---		---- ---	2585 465	2525 783	---- ---
14-39-7	DIAPHRAGM or PISTON, Choke	2585 416	2585 415	2585 424		2585 424	2585 416	2585 415	2585 424
14-39-45	CHOKE	2532 568	2532 568	2402 526		2402 526	2532 568	2532 568	2402 526
14-41-3	PLUNGER, w/ROD, Pump .	2525 782	2525 782	2196 214		2196 214	2525 782	2525 782	2196 214
14-41-7	LINK, Pump Operating .	---- ---	⊟2808 062	---- ---		---- ---	⊟2808 062	---- ---	---- ---
14-41-22	LEVER, Pump Operating.	---- ---	⊟2808 061	---- ---		---- ---	⊟2808 061	---- ---	---- ---
14-41-23	RETAINER, Pump Operating Lever. . . .	---- ---	⊟2808 059	---- ---		---- ---	⊟2808 059	---- ---	---- ---
14-43-5	ROD, Step-Up	---- ---	---- ---	2299 108		2299 110	---- ---	---- ---	2299 108

TYPE LETTERS Indicate: V - Valiant, L - Dart, R - Belvedere, W - Coronet, P - Plymouth, D - Dodge, C - Chrysler, Y - Imperial

★Indicates use as required. Numerals in parentheses ( ) refer to notes. Printed in U.S.A.
⊟Indicates parts not listed in any previous parts book. Prices and specifications subject to change without notice.
* Indicates change or addition.

March 1966 Supersedes May 1965.

MyMopar.com

14-30-0 CARBURETOR - Cont'd

PART TYPE	COMPONENT CHART REFERENCE NO.	8	9	10	11	12	13	14
CODE	MFG. NO.	3836S	R3057A	R3058A	3837S	3838S	3839S	3840S
14-30-2	GASKET, Flange	2205 582	2205 582	2205 582	2205 582	2205 582	2205 582	2205 582
14-30-4	REPAIR PACKAGE	2585 425	2585 462	2585 462	2585 426	2585 427	2585 426	2585 427
	REPAIR PACKAGE, Major	---- ---	⊟2808 078	⊟2808 077	---- ---	---- ---	---- ---	---- ---
	ZIP KIT	2495 987	---- ---	---- ---	2495 987	2495 987	2495 987	2495 987
14-30-7	GASKET PACKAGE	2448 981	2585 463	2585 463	2448 981	2448 981	2448 981	2448 981
14-30-8	NEEDLE, w/SEAT, Float .	2448 975	2299 042	2299 042	2448 975	2448 975	2448 975	2448 975
14-35-1	JET, Main Metering . . .	2299 005	2299 245	2299 248	2299 005	2299 005	2299 005	2299 005
14-35-33	STEM, Economizer	---- ---	2525 784	2525 784	---- ---	---- ---	---- ---	---- ---
14-35-39	WELL, Main	---- ---	2585 466	⊟2585 465	---- ---	---- ---	---- ---	---- ---
14-39-7	DIAPHRAGM or PISTON, Choke	2585 424	2585 415	2585 416	2585 424	2585 424	2585 424	2585 424
14-39-45	CHOKE	2402 526	2532 568	2532 568	2402 526	2402 526	2402 526	2402 526
14-41-3	PLUNGER, w/ROD, Pump .	2196 214	2525 782	2525 782	2196 214	2196 214	2196 214	2196 214
14-41-7	LINK, Pump Operating . .	---- ---	⊟2808 062	⊟2808 062	---- ---	---- ---	---- ---	---- ---
14-41-22	LEVER, Pump Operating .	---- ---	⊟2808 061	⊟2808 061	---- ---	---- ---	---- ---	---- ---
14-41-23	RETAINER, Pump Operating Lever . . .	---- ---	⊟2808 059	⊟2808 059	---- ---	---- ---	---- ---	---- ---
14-43-5	ROD, Step-Up	2299 110	---- ---	---- ---	2585 450	2585 450	2448 984	2299 110

PART TYPE	COMPONENT CHART REFERENCE NO.	15	16	17	18	19	20	21
CODE	MFG. NO.	R3059A	R3060A	3841S	3-248	3-249	3843S	3844S
14-30-2	GASKET, Flange	2205 582	2205 582	2205 582	2468 818	2468 818	2468 818	2468 818
14-30-4	REPAIR PACKAGE . . .	2585 462	2585 462	2448 988	⊟2585 498	⊟2585 498	*2808 017	*2808 017
	REPAIR PACKAGE, Major	⊟2808 078	⊟2808 077	---- ---	---- ---	---- ---	---- ---	---- ---
	ZIP KIT	---- ---	---- ---	2448 987	*2585 496	*2585 496	2525 771	2525 771
14-30-7	GASKET PACKAGE . . .	2585 463	2585 463	2448 986	*2585 495	*2585 495	*2808 023	*2808 023
14-30-8	NEEDLE, w/SEAT, Float .	2299 042	2299 042	2448 975	2240 436	2240 436	2240 410	2240 410
14-35-1	JET, Main Metering . . .	*2299 242	2299 248	1618 157	2585 442	2585 446	2585 406	2585 406
14-35-6	JET, Power By-Pass . . .	---- ---	---- ---	---- ---	2585 456	2585 456	---- ---	---- ---
14-35-8	JET, Main Discharge . . .	---- ---	---- ---	---- ---	1631 353	1631 353	---- ---	---- ---
14-35-33	STEM, Economizer	2525 784	2525 784	---- ---	---- ---	---- ---	---- ---	---- ---
14-35-39	WELL, Main	⊟2585 466	⊟2585 465	---- ---	---- ---	---- ---	---- ---	---- ---
14-39-7	DIAPHRAGM or PISTON, Choke	2585 415	2585 416	2585 424	2448 971	2448 971	2585 418	2585 418
14-39-45	CHOKE	2532 568	2532 568	2536 152	2465 526	2465 526	2463 573	2463 573

TYPE LETTERS Indicate: V - Valiant, L - Dart, R - Belvedere, W - Coronet, P - Plymouth, D - Dodge, C - Chrysler, Y - Imperial

★Indicates use as required. Numerals in parentheses ( ) refer to notes. Printed in U.S.A.

⊟Indicates parts not listed in any previous parts book. Prices and specifications subject to change without notice.

March 1966 Supersedes May 1965. * Indicates change or addition.

MyMopar.com

14-30-0 CARBURETOR - Cont'd

PART TYPE	COMPONENT CHART REFERENCE NO.	15	16	17	18	19	20	21
CODE	MFG. NO.	R3059A	R3060A	3841S	3-248	3-249	3843S	3844S
14-41-3	PLUNGER, w/ROD, Pump	2525 782	2525 782	2196 214	2585 441	2585 441	2299 217	2299 217
14-41-7	LINK, Pump Operating	⊟2808 062	⊟2808 062	---- ---	---- ---	---- ---	---- ---	---- ---
14-41-22	LEVER, Pump Operating.	⊟2808 061	⊟2808 061	---- ---	---- ---	---- ---	---- ---	---- ---
14-41-23	RETAINER, Pump Operating Lever. . . .	⊟2808 059	⊟2808 059	---- ---	---- ---	---- ---	---- ---	---- ---
14-43-5	ROD, Step-Up	---- ---	---- ---	1631 502	---- ---	---- ---	2585 417	2585 419

PART TYPE	COMPONENT CHART REFERENCE NO.	22	23	24	25	26	27	28
CODE	MFG. NO.	3853S	3854S	3847S	3848S	WW3-250	WW3-251	3849S
14-30-2	GASKET, Flange	2121 954	2121 954	2468 818	2468 818	2468 818	2468 818	2264 193
14-30-4	REPAIR PACKAGE	2585 401	2585 405	2585 409	2585 409	2585 448	*2585 494	*2808 019
	ZIP KIT	2585 403	2585 403	2525 771	2525 771	*2585 496	*2585 496	*2808 021
14-30-7	GASKET PACKAGE	2585 402	2585 402	2525 770	2525 770	2585 444	2585 444	2299 196
14-30-8	NEEDLE, w/SEAT, Float .	2196 207	2196 207	2240 410	2240 410	2240 436	2240 436	2240 410
14-30-27	STRAINER, Fuel Inlet . . .	1826 864	1826 864	---- ---	---- ---	---- ---	---- ---	---- ---
14-30-28	NUT, Fuel Inlet Strainer. .	1826 863	1826 863	---- ---	---- ---	---- ---	---- ---	---- ---
14-35-1	JET, Main Metering	---- ---	---- ---	2585 408	2585 408	2299 254	2299 263	2585 410
	Primary	2240 464	2240 464	---- ---	---- ---	---- ---	---- ---	---- ---
	Secondary	1676 717	1676 717	---- ---	---- ---	---- ---	---- ---	---- ---
14-35-6	JET, Power By-Pass . . .	---- ---	---- ---	---- ---	---- ---	2240 454	2299 262	---- ---
14-35-8	JET, Main Discharge . . .	---- ---	---- ---	---- ---	---- ---	1676 821	2585 700	---- ---
14-39-7	DIAPHRAGM or PISTON, Choke	2585 423	2585 423	2585 418	2585 418	2448 971	2448 971	2585 781
14-39-45	CHOKE	2468 738	2468 738	2532 570	2532 570	1852 020	1852 020	2463 159
14-41-3	PLUNGER, w/ROD, Pump .	1826 369	1826 369	2299 217	2299 217	2585 441	2585 441	1826 607
14-43-5	ROD, Step-Up	2585 460	2585 460	2585 419	2585 420	---- ---	---- ---	2585 457

PART TYPE	COMPONENT CHART REFERENCE NO.	29	30	31	32	33	34	35
CODE	MFG. NO.	WWC3-254	WWC3-255	3859S	3860S	3861S	3855S	3856S
14-30-2	GASKET, Flange	2264 193	2264 193	2121 954	2121 954	2465 063	2121 954	2121 954
	Flange Mounting	---- ---	---- ---	---- ---	---- ---	2468 452	---- ---	---- ---
14-30-4	REPAIR PACKAGE	2585 430	2585 440	2299 186	2299 233	2525 792	2299 233	2299 186
	ZIP KIT	2585 454	2585 455	2525 774	2525 774	2495 952	2525 774	2525 774
14-30-7	GASKET PACKAGE	2585 453	2585 453	2196 212	2196 212	2495 951	2196 212	2196 212
14-30-8	NEEDLE, w/SEAT, Float .	2240 436	2240 436	2196 207	2196 207	2196 207	2196 207	2196 207

TYPE LETTERS Indicate: V - Valiant, L - Dart, R - Belvedere, W - Coronet, P - Plymouth, D - Dodge, C - Chrysler, Y - Imperial

★Indicates use as required. Numerals in parentheses ( ) refer to notes. Printed in U.S.A.

⊟Indicates parts not listed in any previous parts book. Prices and specifications subject to change without notice.

* Indicates change or addition. March 1966 Supersedes May 1965.

MyMopar.com

14-30-0 CARBURETOR - Cont'd

PART TYPE	COMPONENT CHART REFERENCE NO.	29	30	31	32	33	34	35
CODE	MFG. NO.	WWC3-254	WWC3-255	3859S	3860S	3861S	3855S	3856S
14-30-27	STRAINER, Fuel Inlet . . .	---- ---	---- ---	1826 864	1826 864	---- ---	1826 864	1826 864
14-30-28	NUT, Fuel Inlet Strainer .	---- ---	---- ---	1826 863	1826 863	---- ---	1826 863	1826 863
14-33-1	FLANGE, Carburetor	---- ---	---- ---	---- ---	---- ---	2468 451	---- ---	---- ---
14-35-1	JET, Main Metering	2585 428	2585 439	---- ---	---- ---	---- ---	---- ---	2585 410
	Primary	---- ---	---- ---	2240 464	2240 464	2448 999	2240 464	2240 464
	Secondary	---- ---	---- ---	2084 166	2084 166	1400 857	1676 692	1676 770
	1 Size Lean	*2808 000	---- ---	---- ---	---- ---	---- ---	---- ---	---- ---
14-35-6	JET, Power By-Pass	2585 452	2585 452	---- ---	---- ---	---- ---	---- ---	---- ---
14-39-7	DIAPHRAGM or PISTON, Choke	2585 429	2585 429	2585 423	2585 423	---- ---	2585 423	2585 423
14-39-45	CHOKE	2532 569	2532 569	*2264 580	---- ---	---- ---	*2264 580	*2264 580
14-41-3	PLUNGER, w/ROD, Pump .	2585 451	2585 451	1826 369	1826 369	2299 114	1826 369	1826 369
14-43-5	ROD, Step-Up	2585 400	---- ---	2240 473	2299 230	1826 348	2299 230	2240 473

PART TYPE	COMPONENT CHART REFERENCE NO.	36	37	38	39	40	41	42
CODE	MFG. NO.	3871S	3966S	R3151A	3858S	R3116A	3964S	R3150A
14-30-2	GASKET, Flange	2121 954	---- ---	2205 582	2121 954	2465 063	2205 582	2205 582
14-30-4	REPAIR PACKAGE	2299 186	2585 426	2585 462	2299 186	---- ---	2448 977	2585 462
	ZIP KIT	2525 774	2495 987	---- ---	2525 774	---- ---	2495 987	---- ---
	REPAIR PACKAGE, Major.	---- ---	---- ---	⊟2808 078	---- ---	---- ---	---- ---	⊟2808 077
14-30-7	GASKET PACKAGE	2196 212	2448 981	2585 463	2196 212	2585 473	2448 978	2585 463
14-30-8	NEEDLE, w/SEAT, Float .	2196 207	2448 975	2299 042	2196 207	2525 798	2448 975	2299 042
14-30-27	STRAINER, Fuel Inlet . . .	1826 864	---- ---	---- ---	1826 864	2084 717	---- ---	---- ---
14-30-28	NUT, Fuel Inlet Strainer. .	1826 863	---- ---	---- ---	1826 863	---- ---	---- ---	---- ---
14-33-1	FLANGE, Carburetor . . .	---- ---	---- ---	---- ---	---- ---	2468 451	---- ---	---- ---
14-34-3	GASKET, Fuel Bowl	---- ---	---- ---	---- ---	---- ---	⊟2808 023	---- ---	---- ---
14-34-10	GASKET, Primary Metering Body	---- ---	---- ---	---- ---	---- ---	2525 794	---- ---	---- ---
	Secondary Metering Body.	---- ---	---- ---	---- ---	---- ---	2525 796	---- ---	---- ---
	Secondary Metering Body Plate	---- ---	---- ---	---- ---	---- ---	2525 797	---- ---	---- ---
14-34-15	GASKET, Power Valve . . .	---- ---	---- ---	---- ---	---- ---	2585 468	---- ---	---- ---
14-34-17	GASKET, Secondary Diaphragm Housing	---- ---	---- ---	---- ---	---- ---	2585 472	---- ---	---- ---
14-35-1	JET, Main Metering Primary	2240 464	2299 005	2299 242	2240 464	2525 799	2299 251	2299 248
	Secondary	1676 692	---- ---	---- ---	1676 692	---- ---	---- ---	---- ---

TYPE LETTERS Indicate: V - Valiant, L - Dart, R - Belvedere, W - Coronet, P - Plymouth, D - Dodge, C - Chrysler, Y - Imperial

★Indicates use as required. Numerals in parentheses ( ) refer to notes. Printed in U.S.A.
⊟Indicates parts not listed in any previous parts book. Prices and specifications subject to change without notice.
March 1966 Supersedes May 1965.

MyMopar.com
* Indicates change or addition.

14-30-0 CARBURETOR - Cont'd

PART TYPE	COMPONENT CHART REFERENCE NO.	36	37	38	39	40	41	42
CODE	MFG. NO.	3871S	3966S	R3151A	3858S	R3116A	3964S	R3150A
14-35-6	VALVE, Power	---- ---	---- ---	---- ---	---- ---	2585 467	---- ---	---- ---
14-35-9	DIAPHRAGM, Secondary . .	---- ---	---- ---	---- ---	---- ---	2585 471	---- ---	---- ---
14-35-33	STEM, Economizer	---- ---	---- ---	2525 784	---- ---	---- ---	---- ---	2525 784
14-35-39	WELL, Main	---- ---	---- ---	2585 466	---- ---	---- ---	---- ---	2525 785
14-39-7	DIAPHRAGM or PISTON, Choke	2585 423	2585 424	2585 415	2585 423	2585 424	2585 424	2585 416
14-39-45	CHOKE	2264 580	---- ---	---- ---	2264 580	---- ---	2402 526	2532 568
14-41-3	PLUNGER, w/ROD or DIAPHRAGM, Pump	1826 369	2196 214	2525 782	1826 369	2196 234	2196 214	2525 782
14-41-7	LINK, Pump Operating . .	---- ---	---- ---	⊟2808 062	---- ---	---- ---	---- ---	⊟2808 062
14-41-22	LEVER, Pump Operating .	---- ---	---- ---	⊟2808 061	---- ---	---- ---	---- ---	⊟2808 061
	Operating Lever	---- ---	---- ---	⊟2808 059	---- ---	---- ---	---- ---	⊟2808 059
14-43-5	ROD, Step-Up	2240 473	2585 450	---- ---	2240 473	---- ---	2299 108	---- ---

PART TYPE	COMPONENT CHART REFERENCE NO.	43	44	45	46	47	48	--
CODE	MFG. NO.	3850A	R3149A	R3152A	WWC3-262	4125S	4127S	---- ---
14-30-2	GASKET, Flange	2264 193	2205 582	*2205 582	*2264 193	*2468 818	*2468 818	---- ---
14-30-4	REPAIR PACKAGE	*2808 019	2585 462	*2585 462	*2808 011	*2808 019	*2808 019	---- ---
	REPAIR PACKAGE, Major.	---- ---	⊟2808 076	⊟2808 077	---- ---	---- ---	---- ---	---- ---
	ZIP KIT	*2808 021	---- ---	---- ---	⊟2808 067	*2808 021	*2808 021	---- ---
14-30-7	GASKET PACKAGE	2299 196	2585 463	*2585 463	⊟2808 068	*2808 020	*2808 020	---- ---
14-30-8	NEEDLE, w/SEAT, Float .	2240 410	2299 042	*2299 042	*2240 436	*2240 410	*2240 410	---- ---
14-35-1	JET, Main Metering	2585 459	2299 239	*2299 248	*2808 000	*2585 459	*2585 459	---- ---
14-35-6	JET, Power By-Pass . . .	---- ---	---- ---	---- ---	*2585 799	---- ---	---- ---	---- ---
14-35-33	STEM, Economizer	---- ---	2525 784	*2525 784	---- ---	---- ---	---- ---	---- ---
14-35-39	WELL, Main	---- ---	2585 464	*2525 785	---- ---	---- ---	---- ---	---- ---
14-39-7	DIAPHRAGM or PISTON, Choke	2585 781	2585 415	*2585 416	*2585 429	*2585 781	*2585 781	---- ---
14-39-45	CHOKE	2463 159	2532 568	*2532 568	*2532 569	*2463 159	*2463 159	---- ---
14-41-3	PLUNGER, w/ROD, Pump .	1826 607	2525 782	*2525 782	*2084 730	*1826 607	*1826 607	---- ---
14-41-7	LINK, Pump Operating . .	---- ---	⊟2808 062	⊟2808 062				
14-41-22	LEVER, Pump Operating .	---- ---	⊟2808 061	⊟2808 061	---- ---	---- ---	---- ---	---- ---
14-41-23	RETAINER, Pump Operating Lever	---- ---	⊟2808 059	⊟2808 059	---- ---	---- ---	---- ---	---- ---
14-43-5	ROD, Step-Up	2585 422	---- ---	---- ---	---- ---	*2585 422	*2585 422	---- ---

TYPE LETTERS Indicate: V - Valiant, L - Dart, R - Belvedere, W - Coronet, P - Plymouth, D - Dodge, C - Chrysler, Y - Imperial

★Indicates use as required. Numerals in parentheses ( ) refer to notes. Printed in U.S.A.
⊟Indicates parts not listed in any previous parts book. Prices and specifications subject to change without notice.
* Indicates change or addition. March 1966 Supersedes May 1965.

MyMopar.com

CODE	PART NAME AND DESCRIPTION	CYL	PER CAR	VALIANT / DART	PLYMOUTH BELVEDERE / DODGE CORONET	PLYMOUTH FURY / DODGE POLARA / CHRYSLER	IMPERIAL
14-63-0	**CHOKE CONTROL CABLE**						
14-63-1	CABLE, w/426 cu. in. Eng., Hemispherical . .	8	1	---- ---	2402 883		
14-63-19	GROMMET, Cable, w/426 cu. in. Eng., Hemispherical	8	1	---- ---	2216 552		
14-63-24	KNOB, Cable, w/426 cu. in. Eng., Hemispherical	8	1	---- ---	2402 885		
14-65-0	**AUTOMATIC CHOKE TO CARBURETOR ROD CLIP**						
14-65-4	CLIP, Stamped D-L	8	1	2465 561	2465 561	2465 561	
	Stamped D-R		1	2465 560	2464 560	2465 560	2465 560
14-67-0	**FUEL FILTER**						
14-67-1	FILTER		1	2525 254	2525 254	2525 254	2525 254
14-67-2	HOSE, Filter to Carburetor		★	1739 230	1739 230	1739 230	1739 230
	CLAMP		★	274 461	274 461	274 461	274 461
14-67-26	CLIP, Fuel Pump to Fuel Filter Hose Tube . . .	8	1	2532 773	2532 773		
14-67-29	TUBE, Fuel Pump to Fuel Filter, w/361 cu. in. Eng., C1	8	1	---- ---	2406 573	2406 573	
	Fuel Filter Hose to Carburetor, w/383 cu. in. Eng., C1, C2	8	1	---- ---	---- ---	2406 572	
	Fuel Filter to Carburetor, w/361 and 383 cu. in. Eng., C	8	1	---- ---	2406 572	2406 572	
14-68-0	**GOVERNOR**						
	Note: To insure against delay in shipment of Governor DO NOT send orders to Chrysler Corporation. Enter orders direct to the following: Handy Division of King-Seeley Corporation, Ann Arbor, Michigan, U. S. A.						
14-68-3	GASKET, Governor, w/225 cu. in. Eng.	6	1	---- ---	2205 858	2205 858	
14-68-5	TUBE, Governor Vacuum Connection w/225 cu. in. Eng., P.D	6	2	---- ---	2206 146	2206 146	
14-68-8	SPACER, Governor to Carburetor, P	6	1	---- ---	2406 762	2536 154	
14-72-0	**FUEL TANK GAUGE**						
14-72-1	GAUGE		1	2421 493			
	Except Sta. Wgn.		1	---- ---	2584 948	2584 947	
	Sta. Wgn.		1	---- ---	2275 588	2584 946	
			1	---- ---	---- ---	---- ---	2584 949
14-72-5	CLIP, Gauge Grounding		1	2258 862	2258 862	2258 862	2258 862
14-72-9	SEAL, Gauge		1	1948 757	1948 757	1948 757	1948 757
14-72-33	CABLE, w/TERMINAL and INSULATOR, Gauge		★	2257 443	2257 443	2257 443	2257 443
14-72-47	RETAINER, Gauge		1	1730 095	1730 095	1730 095	1730 095
14-73-0	**FUEL PUMP**						
14-73-1	PUMP PACKAGE	6	1	2495 526	2495 526	2495 526	
	PUMP PACKAGE, w/273 or 318 cu. in. Eng. .	8	1	2495 527	2495 527	2495 527	
	Except Hemispherical Eng.	8	1	---- ---	2495 528		
	w/Hemispherical Eng.	8	1	---- ---	2585 118		
		8	1	---- ---	---- ---	2495 528	2495 528
	SCREW		2	6023 548	6023 548	6023 548	6023 548

TYPE LETTERS Indicate: V - Valiant, L - Dart, R - Belvedere, W - Coronet, P - Plymouth, D - Dodge, C - Chrysler, Y - Imperial

★Indicates use as required. Numerals in parentheses ( ) refer to notes. Printed in U.S.A.

⊟Indicates parts not listed in any previous parts book. Prices and specifications subject to change without notice.

MyMopar.com

• Indicates change or addition.

CODE	PART NAME AND DESCRIPTION	CYL	PER CAR	VALIANT / DART	PLYMOUTH BELVEDERE / DODGE CORONET	PLYMOUTH FURY / DODGE POLARA / CHRYSLER	IMPERIAL
14-74-0	**FUEL PUMP MOUNTING GASKET**						
14-74-1	GASKET		1	1400 185	1400 185	1400 185	1400 185
14-77-0	**FUEL PUMP PUSH ROD**						
14-77-17	ROD	8	1	---- ---	1737 745	1737 745	1737 745
	w/426 cu. in. Eng.	8	1	---- ---	2463 921		
14-85-0	**CARBURETOR FUEL LINE TEE**						
14-85-31	TEE, w/2-4 Barrel Carburetors, Hemispherical	8	1	---- ---	2536 766		
14-86-0	**FUEL TANK**						
14-86-1	TANK (also specify 1-2203473 Grommet)		1	*2643 807			
	Except Sta. Wgn. (also specify 1-2203472 Grommet)		1	---- ---	2409 301		
	Except Sta. Wgn. (also specify 1-2203472 Grommet) P		1	---- ---	---- ---	2530 713	
	Except Sta. Wgn. (also specify 1-2203472 Grommet) D	8	1	---- ---	---- ---	2530 714	
	Except Sta. Wgn. (also specify 1-2203472 Grommet) C	8	1	---- ---	---- ---	2530 715	
	Sta. Wgn. (also specify 1-2203 473 Grommet)		1	---- ---	2409 311	2461 023	
			1	---- ---	---- ---	---- ---	2208 535
14-86-13	PLUG, Drain		1	---- ---	---- ---	---- ---	1739 194
14-86-24	SEAL, Drain Plug		1	---- ---	---- ---	---- ---	1739 196
14-86-30	INSULATOR, Fuel Tank to Floor Pan		1	---- ---	---- ---	2530 723	
14-86-35	CAP, Filler Tube, Chrome		1	2074 054			
			1	---- ---	2203 435		
	Except Sta. Wgn., D	8	1	---- ---	---- ---	2460 723	
	Except Sta. Wgn., P, C		1	---- ---	---- ---	2208 538	2208 538
	Sta. Wgn., w/BAR, Chrome		1	---- ---	2074 054		
	CAP PACKAGE, Sta. Wgn., P		1	---- ---	---- ---	2585 386	
	CAP PACKAGE, Sta. Wgn., D, C	8	1	---- ---	---- ---	2585 387	
14-86-39	BAR, Filler Tube Cap, Sta. Wgn., P		1	---- ---	---- ---	2467 646	
	Sta. Wgn., D, C	8	1	---- ---	---- ---	2467 638	
14-86-40	TUBE, Filler, except Sta. Wgn., W		1	2409 302	2533 009		
	Except Sta. Wgn., R		1	---- ---	2533 013		
	Inner, except Sta. Wgn., P		1	---- ---	---- ---	2460 704	
	Outer, except Sta. Wgn., P		1	---- ---	---- ---	2533 004	
	Except Sta. Wgn., D	8	1	---- ---	---- ---	2533 021	
	Except Sta. Wgn., C	8	1	---- ---	---- ---	2533 750	
			1	---- ---	---- ---	---- ---	2533 017
	Sta. Wgn.		1	2409 305	2208 548	*2643 958	
14-86-42	GASKET, Filler Tube Cam		1	2073 931			
	SEAL, Filler Tube to Quarter Panel, Sta. Wgn.		1	---- ---	---- ---	2467 649	
14-86-48	HOSE, Fuel Tank Filler Tube, P		1	---- ---	---- ---	2530 722	
14-86-49	CLAMP, Fuel Tank Filler Tube Hose, except Sta. Wgn.		1	---- ---	---- ---	870 469	

TYPE LETTERS Indicate: V - Valiant, L - Dart, R - Belvedere, W - Coronet, P - Plymouth, D - Dodge, C - Chrysler, Y - Imperial

★Indicates use as required. Numerals in parentheses ( ) refer to notes. Printed in U.S.A.
⊟Indicates parts not listed in any previous parts book. Prices and specifications subject to change without notice.
* Indicates change or addition. March 1966 Supersedes May 1965.

MyMopar.com

CODE	PART NAME AND DESCRIPTION	CYL	PER CAR	VALIANT / DART	PLYMOUTH BELVEDERE / DODGE CORONET	PLYMOUTH FURY / DODGE POLARA / CHRYSLER	IMPERIAL
14-86-0	**FUEL TANK - Cont'd**						
14-86-50	TUBE, Tank Filler Vent Outer, P		1	---- ---	---- ---	2460 710	
	TUBING, Vent, 25 ft. Roll, 1/4" O.D.		★	1843 252	1843 252	1843 252	1843 252
14-86-55	GROMMET, Filler Tube, P		1	2203 473	---- ---	2203 473	
	Except Sta. Wgn., D, C		1	---- ---	2203 472	2203 472	2203 472
	Sta. Wgn., R, W, D, C		1	---- ---	2203 473	2203 473	
	Vent Extension Tube		2	---- ---	---- ---	2216 552	
14-86-57	HOSE, Vent Tube, except Sta. Wgn.		★	1828 456	---- ---	1828 456	
	Sta. Wgn.		★	2074 063			
	Outer Tube, except Sta. Wgn., P		1	---- ---	---- ---	2405 964	
14-86-85	FILTER, Inside of Tank		1	1670 694	1670 694	1670 694	1670 694
	Maximum Performance	8	1	---- ---	2534 111		
14-87-0	**FUEL TANK STONE DEFLECTOR**						
14-87-2	DEFLECTOR, Sta. Wgn.		1	---- ---	2217 480	2527 063	
14-88-0	**FUEL TANK SUPPORT**						
14-88-8	BRACKET, Support Strap, R, W, Sta. Wgn.		1	---- ---	2251 722		
14-88-21	STRAP		1	2203 430			
	Except Sta. Wgn.		★	---- ---	2467 625	2533 000	
	Sta. Wgn.		1	---- ---	2074 015	2460 736	
			2	---- ---	---- ---	---- ---	1944 177
14-88-27	STUD, Strap		1	1671 610			
	Except Sta. Wgn.		1	---- ---	2074 032		
	Sta. Wgn.		1	---- ---	1944 171		
	P, D, C		★	---- ---	---- ---	1944 171	
			2	---- ---	---- ---	---- ---	1671 610
14-88-36	REINFORCEMENT, Rear Floor Pan Fuel Tank Front, except Sta. Wgn.		1	---- ---	---- ---	2481 381	
	Rear, except Sta. Wgn.		1	---- ---	---- ---	2481 381	
14-89-0	**FUEL LINE TUBE**						
14-89-2	TUBING, 25 Ft. Roll, 5/16" O.D.		★	1843 253	1843 253	1843 253	1843 253
14-89-57	HOSE, Tube		★	1739 230	1739 230	1739 230	1739 230
	To Fuel Pump, Maximum Performance		1	---- ---	2534 117		
14-89-58	STEM, Fuel Pump Hose, w/426 cu. in. Eng.	8	1	---- ---	2532 191		
14-90-0	**FUEL LINE TUBE CLIP**						
14-90-1	CLIP		★	2123 341	2123 341	2123 341	1119 423
	Floor Pan		2	2207 920			
	Center, Maximum Performance	8	1	---- ---	2534 113		

TYPE LETTERS Indicate: V - Valiant, L - Dart, R - Belvedere, W - Coronet, P - Plymouth, D - Dodge, C - Chrysler, Y - Imperial

★Indicates use as required. Numerals in parentheses ( ) refer to notes. Printed in U.S.A.

⊟Indicates parts not listed in any previous parts book. Prices and specifications subject to change without notice.

March 1966 Supersedes May 1965. * Indicates change or addition.

MyMopar.com

GROUP 15 - HOOD

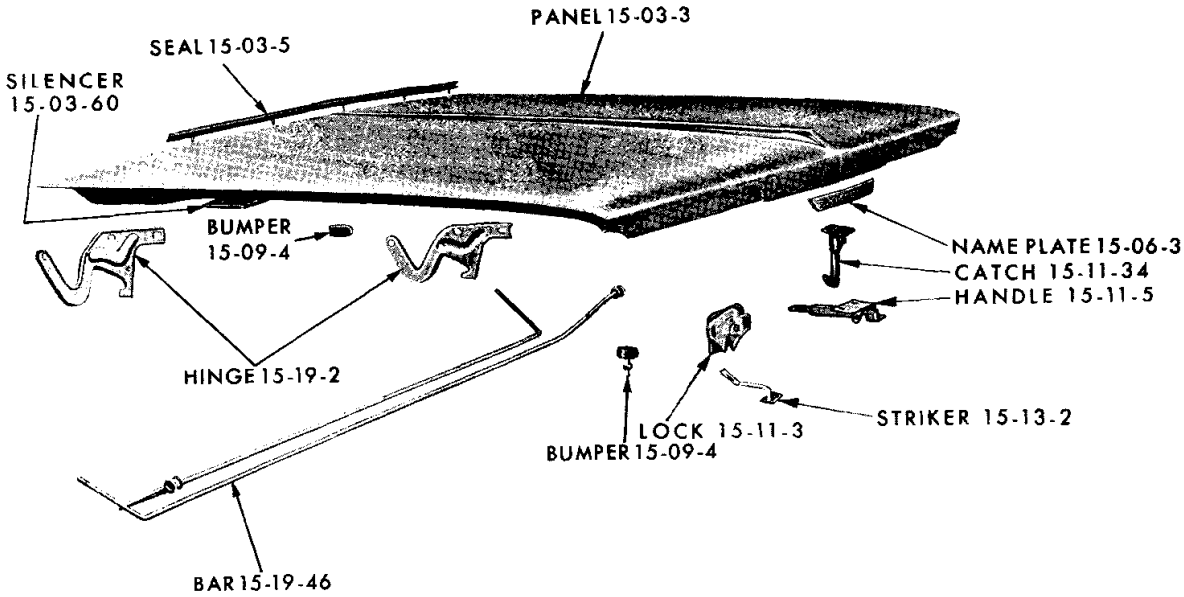

19x9502 B

HOOD - VALIANT

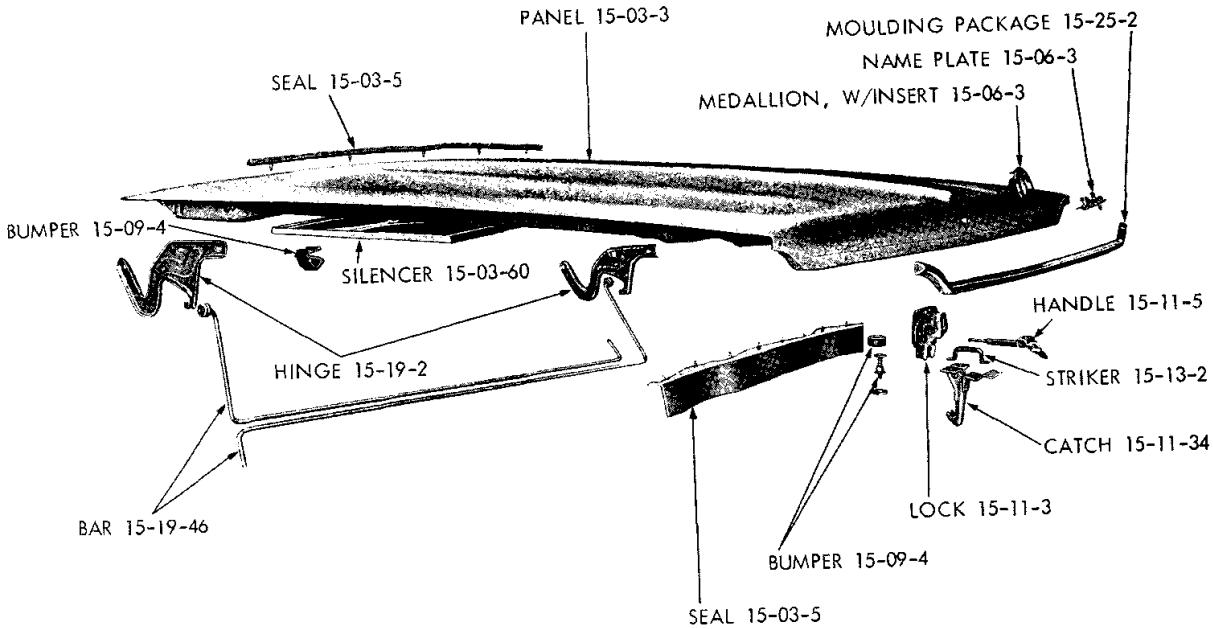

19a0088

HOOD - DART

MyMopar.com

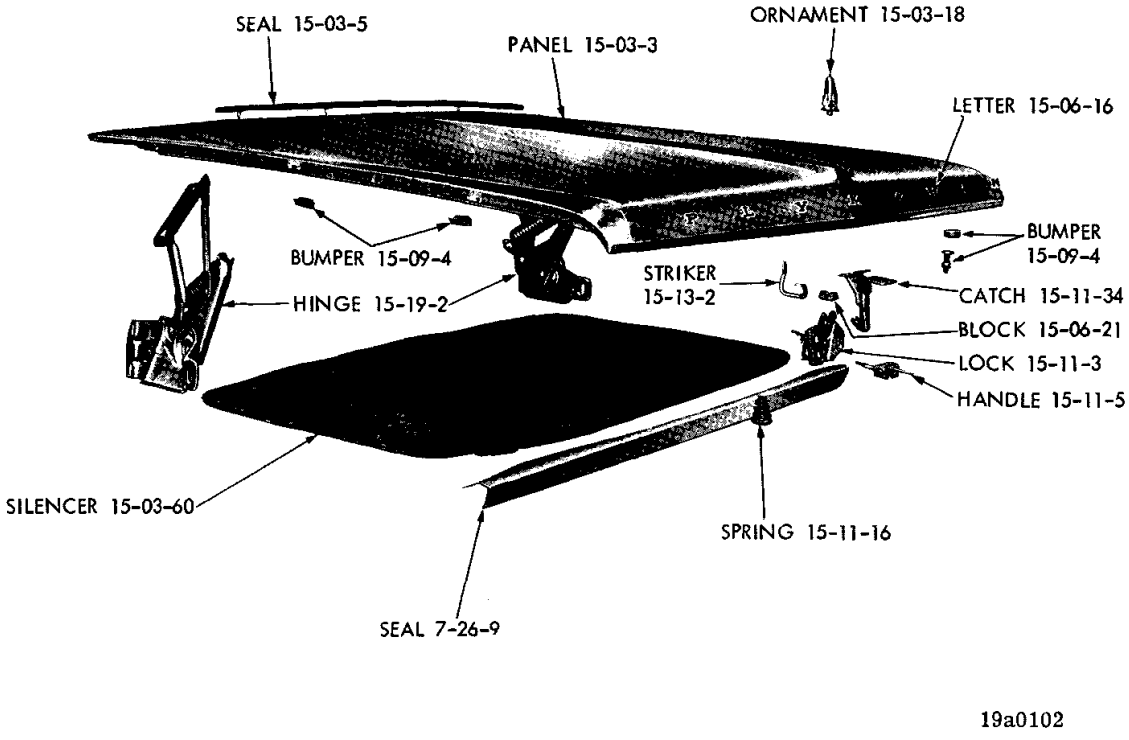

HOOD - BELVEDERE

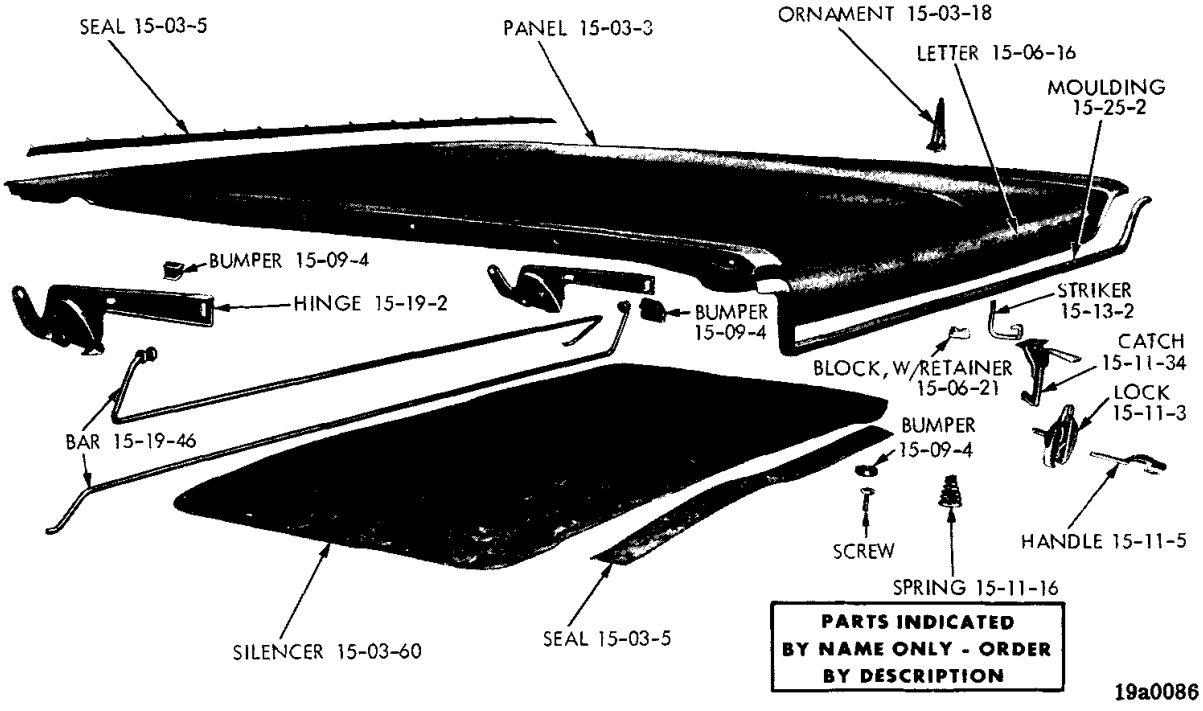

HOOD - PLYMOUTH

MyMopar.com

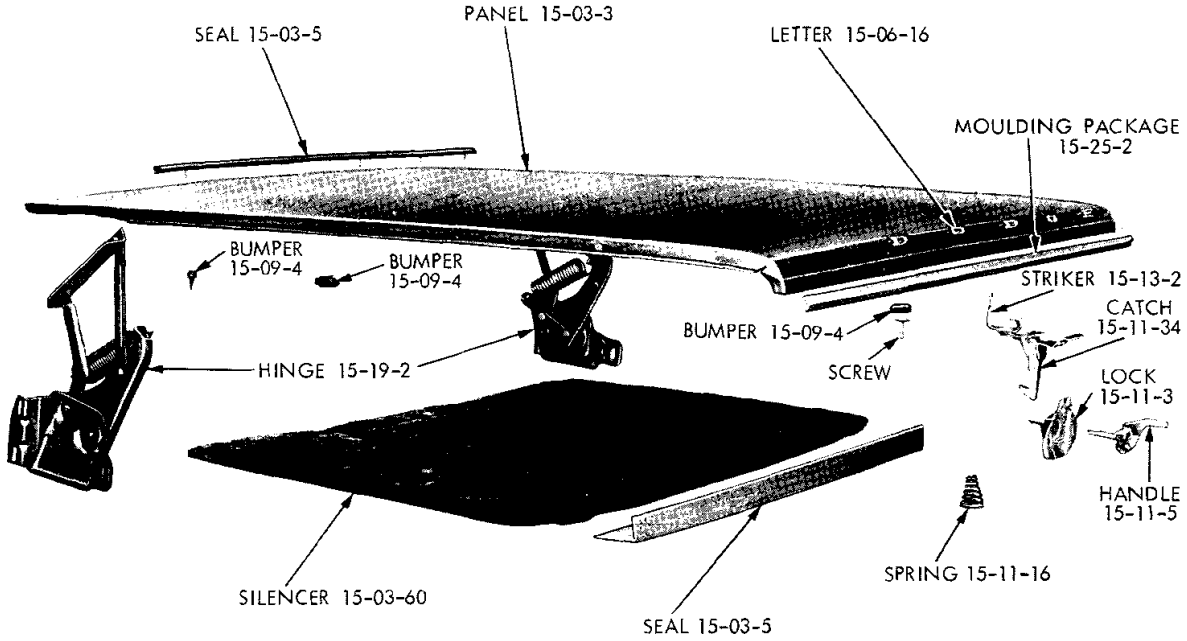

19a0085

HOOD - CORONET

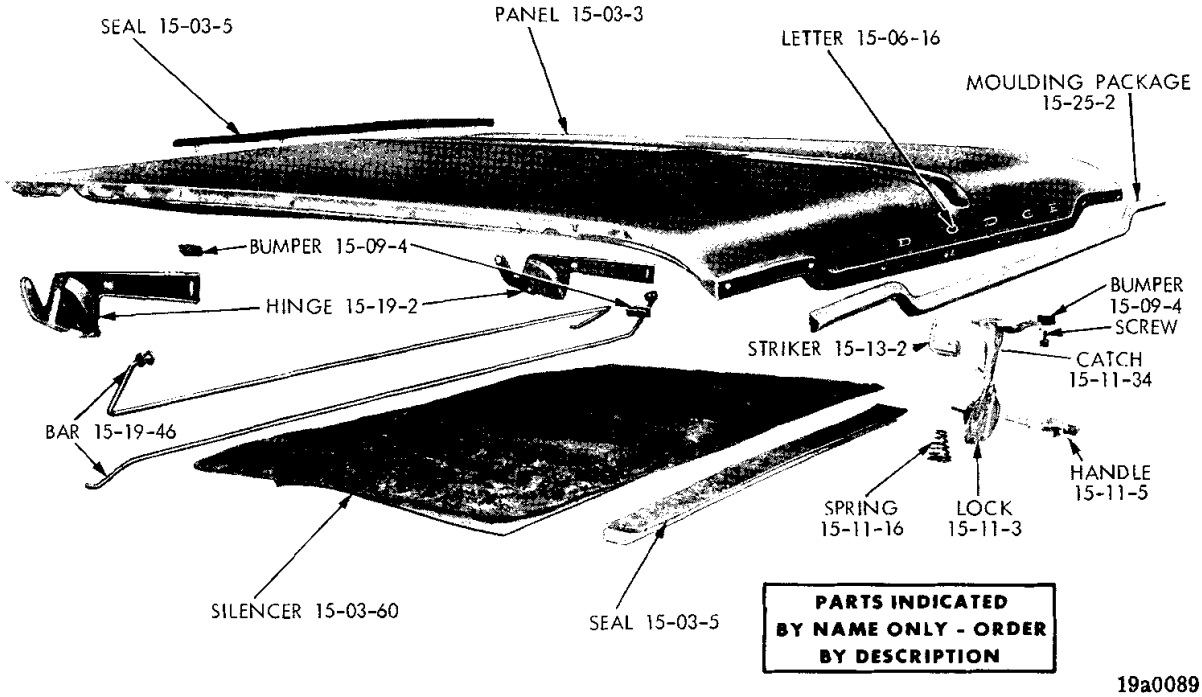

19a0089

HOOD - DODGE

MyMopar.com

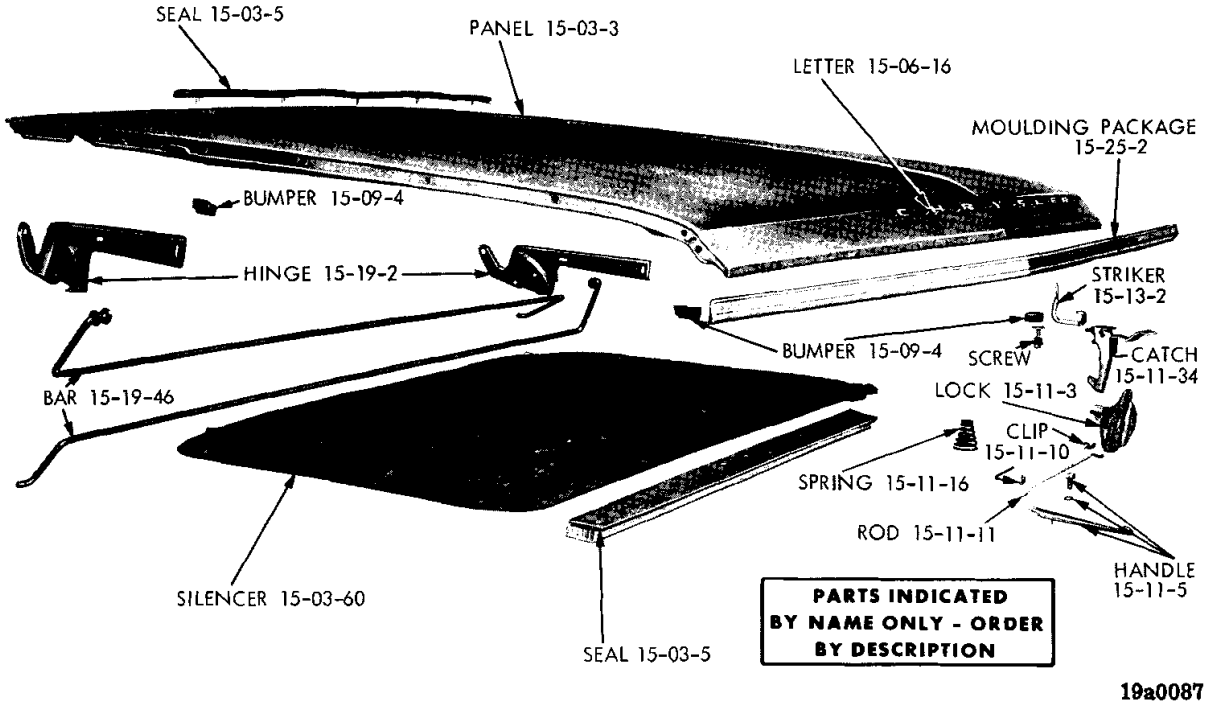

HOOD - CHRYSLER

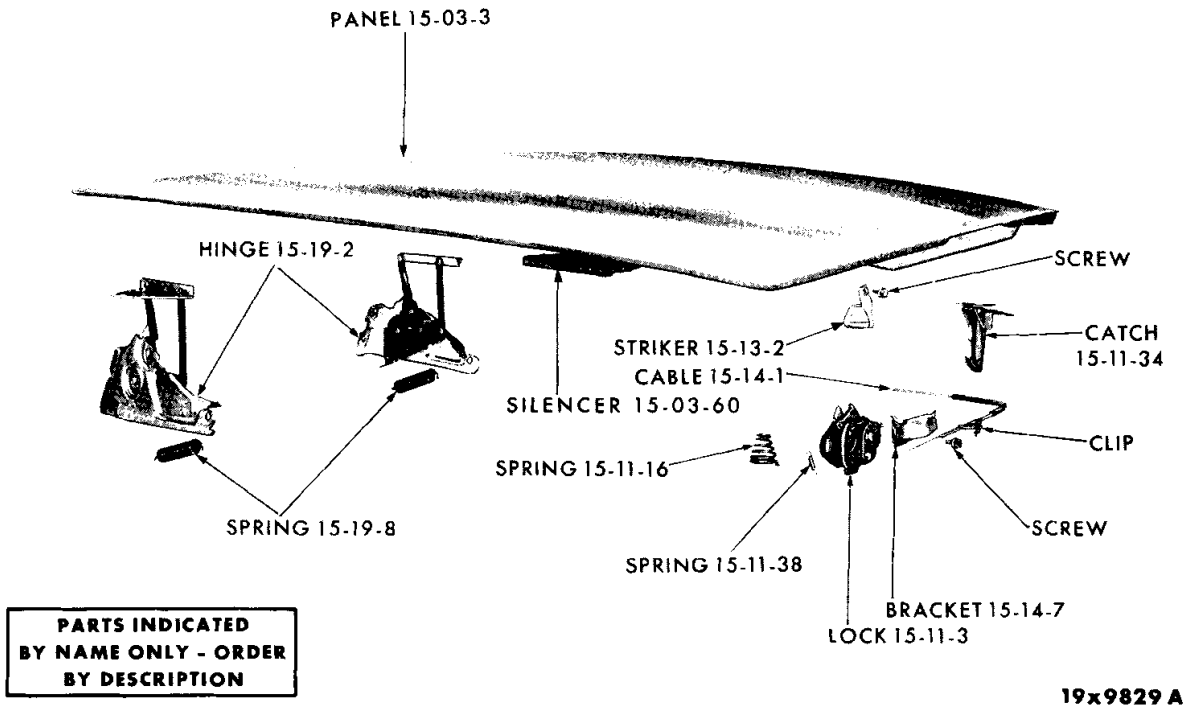

HOOD - IMPERIAL

MyMopar.com

CODE	PART NAME AND DESCRIPTION	CYL	PER CAR	VALIANT / DART	PLYMOUTH BELVEDERE / DODGE CORONET	PLYMOUTH FURY / DODGE POLARA / CHRYSLER	IMPERIAL
15-03-0	**HOOD TOP PANEL**						
15-03-3	PANEL, V		1	2493 580			
	L		1	2493 354			
	R		1	---- ---	2493 654		
	W		1	---- ---	2493 657		
	w/Air Scoop, w/426 cu. in. Eng., R2	8	1	---- ---	⊟2416 904		
	w/Air Scoop, w/426 cu. in. Eng., W2	8	1	---- ---	⊟2416 907		
	P		1	---- ---	---- ---	2493 387	
	D		1	---- ---	---- ---	2493 376	
	C		1	---- ---	---- ---	2493 383	
			1	---- ---	---- ---	---- ---	2425 550
15-03-5	SEAL, Hood to Cowl, w/FASTENER		1	2217 348	2217 348		
	Hood to Cowl, w/FASTENER		1	---- ---	---- ---	2570 974	
	Hood to Yoke, V		1	2445 710	---- ---	2445 864	
	Hood to Yoke, L		1	2445 717			
	Hood to Yoke		1	---- ---	---- ---	---- ---	2445 103
	CLIP, Hood to Yoke		8	---- ---	---- ---	6000 070	6006 104
15-03-18	ORNAMENT, Hood Top						
	NOTE: See Exterior Moulding Illustrations in Front of Group 23 Body.						
15-03-21	EXTENSION, Hood Panel Radiator Grille Ornament Base		1	---- ---	---- ---	---- ---	2445 064
15-03-60	SILENCER, V		1	2417 109			
	L		1	2445 273			
	R		1	---- ---	2445 508		
	W		1	---- ---	2524 039		
			1	---- ---	---- ---	2445 450	
			1	---- ---	---- ---	---- ---	2417 647
	CLIP		★	*6001 798	*6001 798	*6001 798	*6001 798
	FASTENER		★	6001 798	6001 798	6001 798	6001 798
15-03-64	SCOOP, Hood Outer Panel Air, w/426 cu. in. Eng.	8	1	---- ---	*2578 711		
	BOLT, Hex., 1/4-20 x 4 5/16"	8	1	---- ---	⊟9422 252		
	BOLT, Hex., 1/4-20 x 4 1/8"	8	1	---- ---	⊟9422 251		
	SPACER, Center	8	1	---- ---	⊟6025 476		
	SPACER, Center	8	1	---- ---	⊟6025 477		
15-03-66	REINFORCEMENT, Hood Air Center Lower, w/426 cu. in. Eng.	8	1	---- ---	*2578 662		
15-06-0	**HOOD NAMEPLATE, MEDALLIONS AND LETTERS**						
15-06-3	NAMEPLATE, Hood Panel, Plymouth		1	*2583 215			
15-06-17	NUT, Hood Name Letter C		★	---- ---	---- ---	1839 995	
15-06-21	RETAINER, w/BLOCK, Hood Ornament, P		1	---- ---	---- ---	2524 774	
	R		1	---- ---	2578 575		
	NOTE: See Exterior Moulding Illustrations in Front of Group 23 Body.						
15-09-0	**HOOD BUMPER**						
15-09-4	BUMPER, Hood to Fender		2	2276 917			
	Hood to Grille, V		2	2578 828			
	Hood to Fender, D, C		4	---- ---	2445 476	2445 476	
	Hood to Fender, Front, P		2	---- ---	---- ---	2524 106	
	Hood to Fender, Rear, P		2	---- ---	---- ---	2445 476	

TYPE LETTERS Indicate: V - Valiant, L - Dart, R - Belvedere, W - Coronet, P - Plymouth, D - Dodge, C - Chrysler, Y - Imperial

★Indicates use as required. Numerals in parentheses ( ) refer to notes. Printed in U.S.A.
⊟Indicates parts not listed in any previous parts book. Prices and specifications subject to change without notice.
* Indicates change or addition. May 1965, Supersedes Nov. 30, 1964.

MyMopar.com

CODE	PART NAME AND DESCRIPTION	CYL	PER CAR	VALIANT / DART	PLYMOUTH BELVEDERE / DODGE CORONET	PLYMOUTH FURY / DODGE POLARA / CHRYSLER	IMPERIAL
15-09-0	**HOOD BUMPER - Cont'd**						
15-09-4	BUMPER - Cont'd						
	Hood to Fender		10	---- ---	2276 804	---- ---	2417 574
	Hood to Fender Leveling		2	---- ---	2276 749		
	Hood to Radiator Cross Bar (also specify 2 - 6025 128 Screw)		2	2276 804	2276 804	2276 804	*2276 804
15-11-0	**HOOD LOCK**						
15-11-3	LOCK, except C1, C2, C3		1	2428 400	2428 400	2428 400	
	C1, C2, C3		1	---- ---	---- ---	*2583 206	
			1	---- ---	---- ---	---- ---	2486 022
	SCREW		2	180 024	180 024	180 024	180 024
15-11-5	HANDLE, Lock Release, V		1	2486 988			
	L		1	2486 925			
	R		1	---- ---	2583 235		
	W		1	---- ---	2486 928		
	P		1	---- ---	---- ---	2520 766	
	D		1	---- ---	---- ---	2486 918	
	C		1	---- ---	---- ---	2486 696	
	SCREW		★	163 226	163 226	163 226	
	SCREW, C		★	---- ---	---- ---	6024 424	
15-11-7	BRACE, Lock Support Grille Frame, D2		1	---- ---	---- ---	2445 859	
15-11-10	CLIP, Hood Lock Release Rod Anti-Rattle, C		2	---- ---	---- ---	2583 195	
15-11-11	ROD, Lock Release, C		1	---- ---	---- ---	2486 699	
15-11-16	SPRING, Hood Release Assist		1	---- ---	2486 698	2486 698	
	Hood Lock Upper Pop-Up		1	---- ---	---- ---	---- ---	2299 599
15-11-17	CLIP, Lock Release Handle Return Spring, except C		1	2486 914	2486 914	2486 914	
15-11-34	CATCH, Hood Safety, V		1	2428 142			
	L, C		1	2520 752	---- ---	2520 752	
	w/Release HANDLE, except C		1	---- ---	2583 253	2583 253	2583 253
	SCREW		2	180 024	180 024	180 024	180 024
15-11-38	SPRING, Lock Latch to Pawl		1	2428 125	2428 125	2428 125	2428 125
15-11-46	SUPPORT, Lock Vertical, V		1	2578 626			
	Barracuda, V		1	2578 626			
	L		1	2445 264			
			1	---- ---	2445 539		
	P		1	---- ---	---- ---	2445 289	
	D, C		1	---- ---	---- ---	2445 427	
			1	---- ---	---- ---	---- ---	2417 478
	SCREW		2	180 020	180 020	180 020	180 020
15-11-50	BRACKET, Lock Vertical Support Crossmember		1	---- ---	---- ---	2445 726	
15-11-55	GUSSET, Lock Vertical Support		1	---- ---	2524 138	2524 138	
15-11-58	PLATE, Lock Support to Yoke, V		1	2445 702			
	L		1	2449 497			

TYPE LETTERS Indicate: V - Valiant, L - Dart, R - Belvedere, W - Coronet, P - Plymouth, D - Dodge, C - Chrysler, Y - Imperial

★Indicates use as required. Numerals in parentheses ( ) refer to notes. Printed in U.S.A.

⊟Indicates parts not listed in any previous parts book. Prices and specifications subject to change without notice.

March 1966 Supersedes May 1965. * Indicates change or addition.

MyMopar.com

CODE	PART NAME AND DESCRIPTION	CYL	PER CAR	VALIANT / DART	PLYMOUTH BELVEDERE / DODGE CORONET	PLYMOUTH FURY / DODGE POLARA / CHRYSLER	IMPERIAL
15-13-0	**HOOD LOCK STRIKER**						
15-13-2	STRIKER, V		1	2486 961			
	L		1	2520 230			
			1	---- ---	2486 697	2486 697	2486 943
	SCREW		2	180 021	180 021	180 021	180 021
15-14-0	**HOOD LOCK CONTROL**						
15-14-1	CONTROL, on Instrument Panel		1	---- ---	---- ---	---- ---	2486 463
	CLIP, to Lock		1	---- ---	---- ---	---- ---	6015 143
15-14-7	BRACKET, Release Cable to Hood Lock Plate.		1	---- ---	---- ---	---- ---	2486 077
15-14-20	GROMMET, Control Cable		1	---- ---	---- ---	---- ---	2216 552
15-14-21	SLEEVE, Control Cable		1	---- ---	---- ---	---- ---	2097 055
15-19-0	**HOOD HINGE**						
15-19-2	HINGE, Right		1	2243 282	2486 196	2520 672	2428 418
	Left		1	2243 283	2486 197	2520 673	2428 419
	"J" NUT, Hinge to Fender Shield		2	---- ---	6023 170		
	SPRING NUT, Hinge to Body		2	6023 350	6023 350	6023 350	
	SCREW w/WASHER, to Cowl, Rt. Side		2	---- ---	---- ---	---- ---	*6025 346
15-19-8	SPRING, Hinge		2	---- ---	2486 190		
			2	---- ---	---- ---	---- ---	2428 389
15-19-35	BRACKET, w/STUD, Cowl Top Hood Hinge Pivot		2	---- ---	---- ---	2570 002-3	
15-19-46	BAR, Hood Hinge Torsion Right		1	2428 148			
	Left		1	2428 149			
	Right, P, C		1	---- ---	---- ---	2486 756	
	Left, P, C		1	---- ---	---- ---	2486 757	
	Right, D		1	---- ---	---- ---	2520 656	
	Left, D		1	---- ---	---- ---	2520 657	
15-19-47	BRACKET, Hood Hinge Torsion Rod Anti-Rattle		1	2492 642			
	Right, P, D, C		1	---- ---	---- ---	2492 956	
	Left, P, D, C		1	---- ---	---- ---	2492 957	
15-19-48	BUSHING, Hood Hinge Torsion Bar Roller		4	2583 236			

15-25-0 HOOD MOULDING

NOTE: See Exterior Moulding Illustrations in Front of Group 23 Body.

NOTES

TYPE LETTERS Indicate: V - Valiant, L - Dart, R - Belvedere, W - Coronet, P - Plymouth, D - Dodge, C - Chrysler, Y - Imperial

★Indicates use as required. Numerals in parentheses ( ) refer to notes. Printed in U.S.A.

⊟Indicates parts not listed in any previous parts book. Prices and specifications subject to change without notice.

* Indicates change or addition.

MyMopar.com

CODE	PART NAME AND DESCRIPTION	CYL	PER CAR	VALIANT	PLYMOUTH BELVEDERE	PLYMOUTH FURY	IMPERIAL
				DART	DODGE CORONET	DODGE POLARA	
						CHRYSLER	

NOTES

TYPE LETTERS Indicate: V - Valiant, L - Dart, R - Belvedere, W - Coronet, P - Plymouth, D - Dodge, C - Chrysler, Y - Imperial

★Indicates use as required. Numerals in parentheses ( ) refer to notes. Printed in U.S.A.

⊟Indicates parts not listed in any previous parts book. Prices and specifications subject to change without notice.

MyMopar.com

GROUP 16 - PROPELLER SHAFT AND UNIVERSAL JOINT

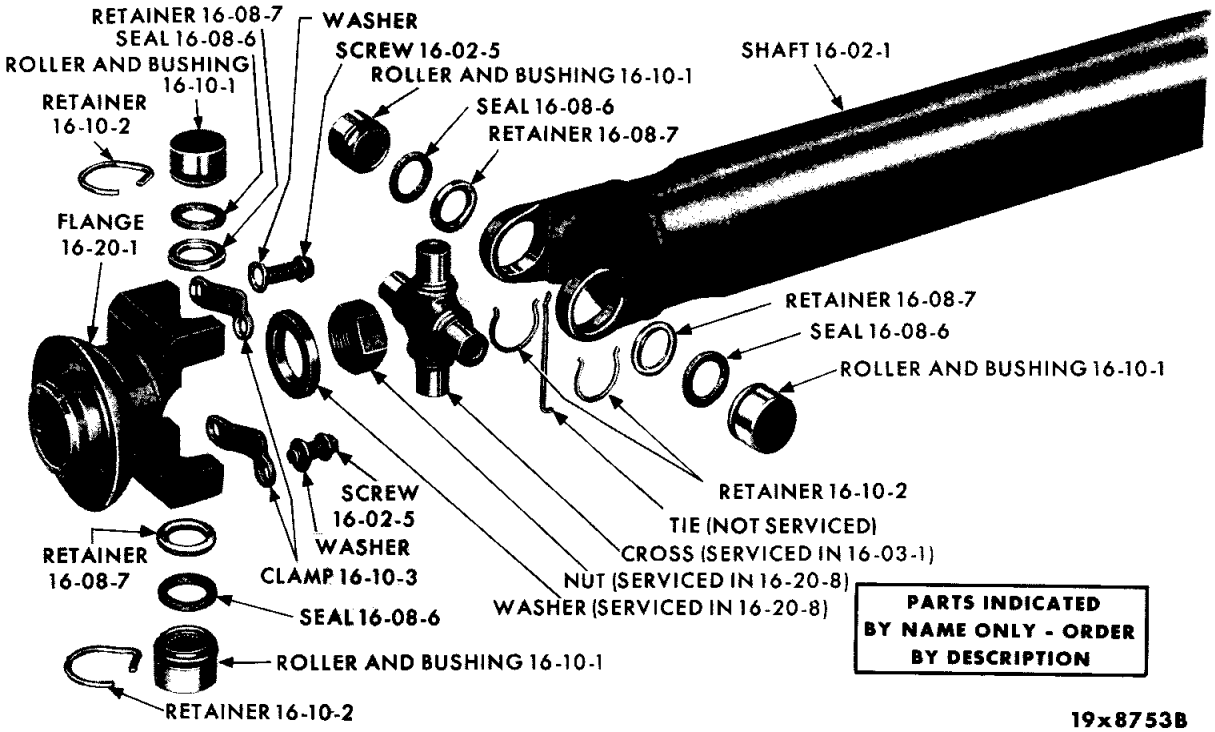

PROPELLER SHAFT - AXLE END

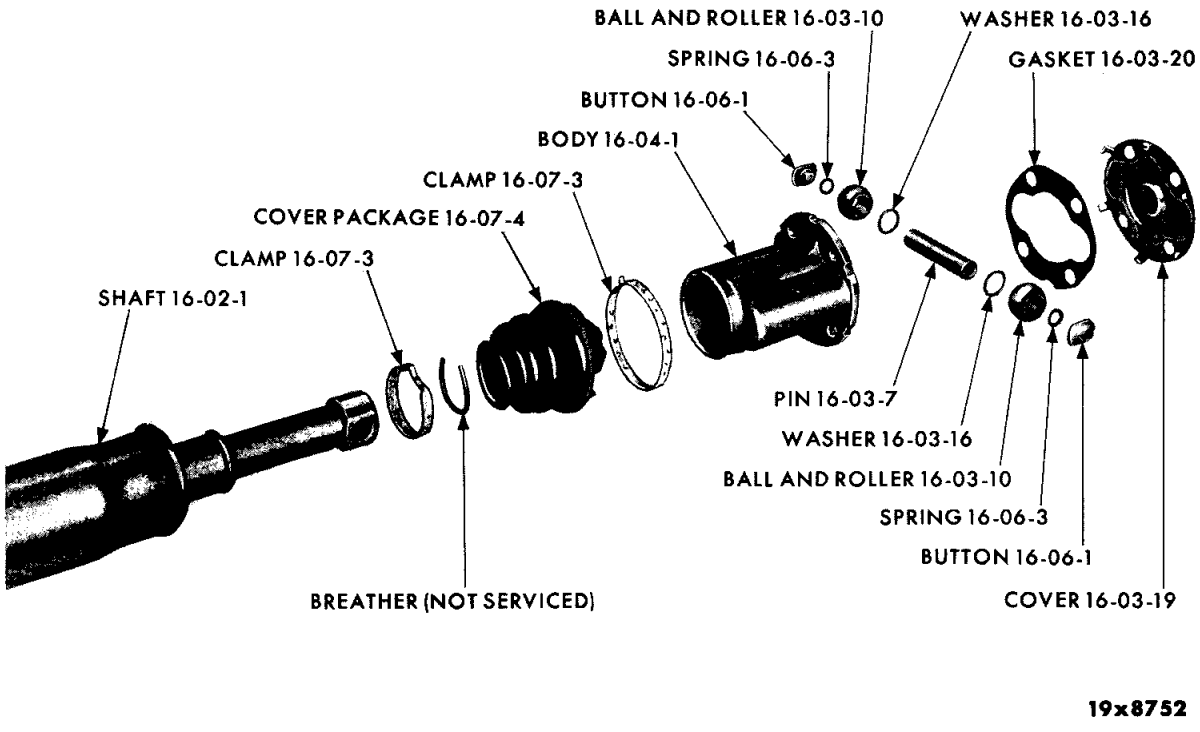

PROPELLER SHAFT - TRANSMISSION END

MyMopar.com

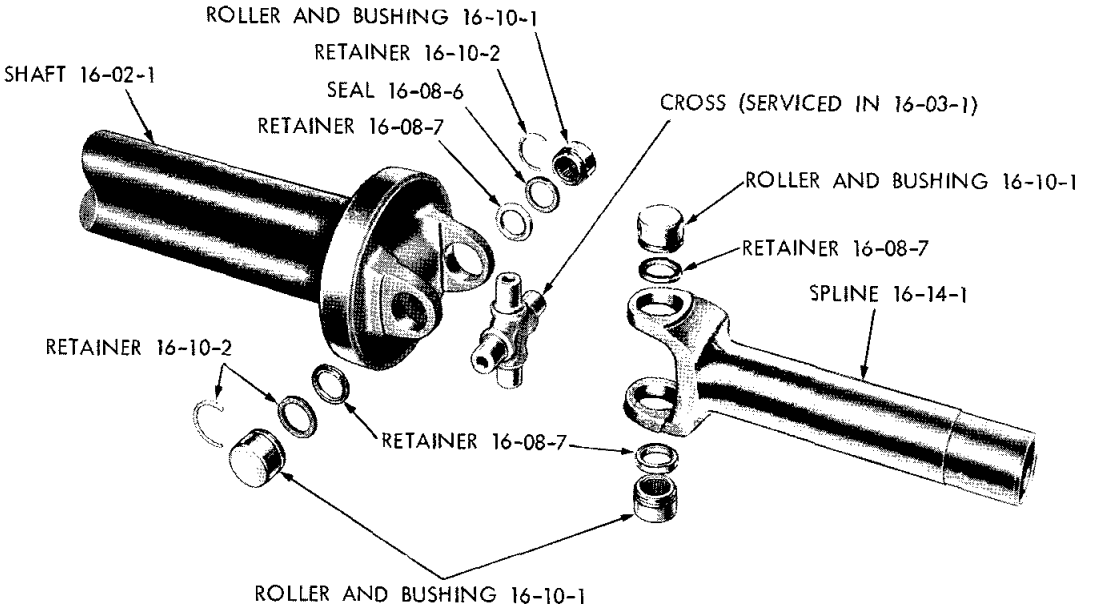

19a0181

PROPELLER SHAFT (TRANSMISSION END) - PLYMOUTH, DODGE AND CHRYSLER

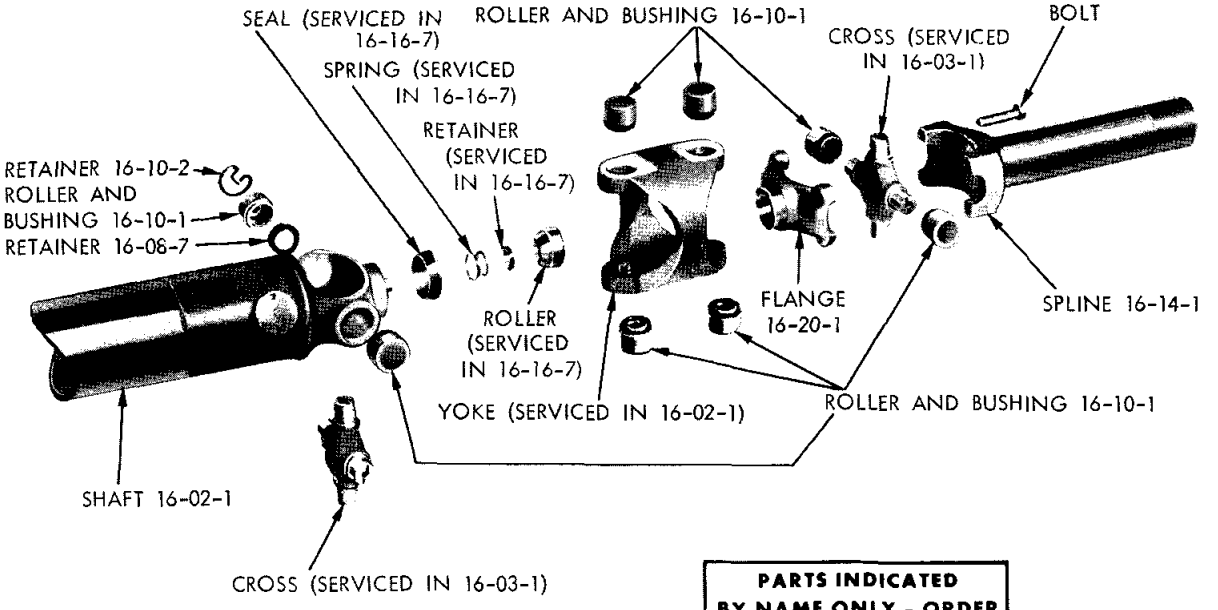

PARTS INDICATED BY NAME ONLY - ORDER BY DESCRIPTION

19a0180 A

PROPELLER SHAFT (CONSTANT VELOCITY) - CHRYSLER C3-H

MyMopar.com

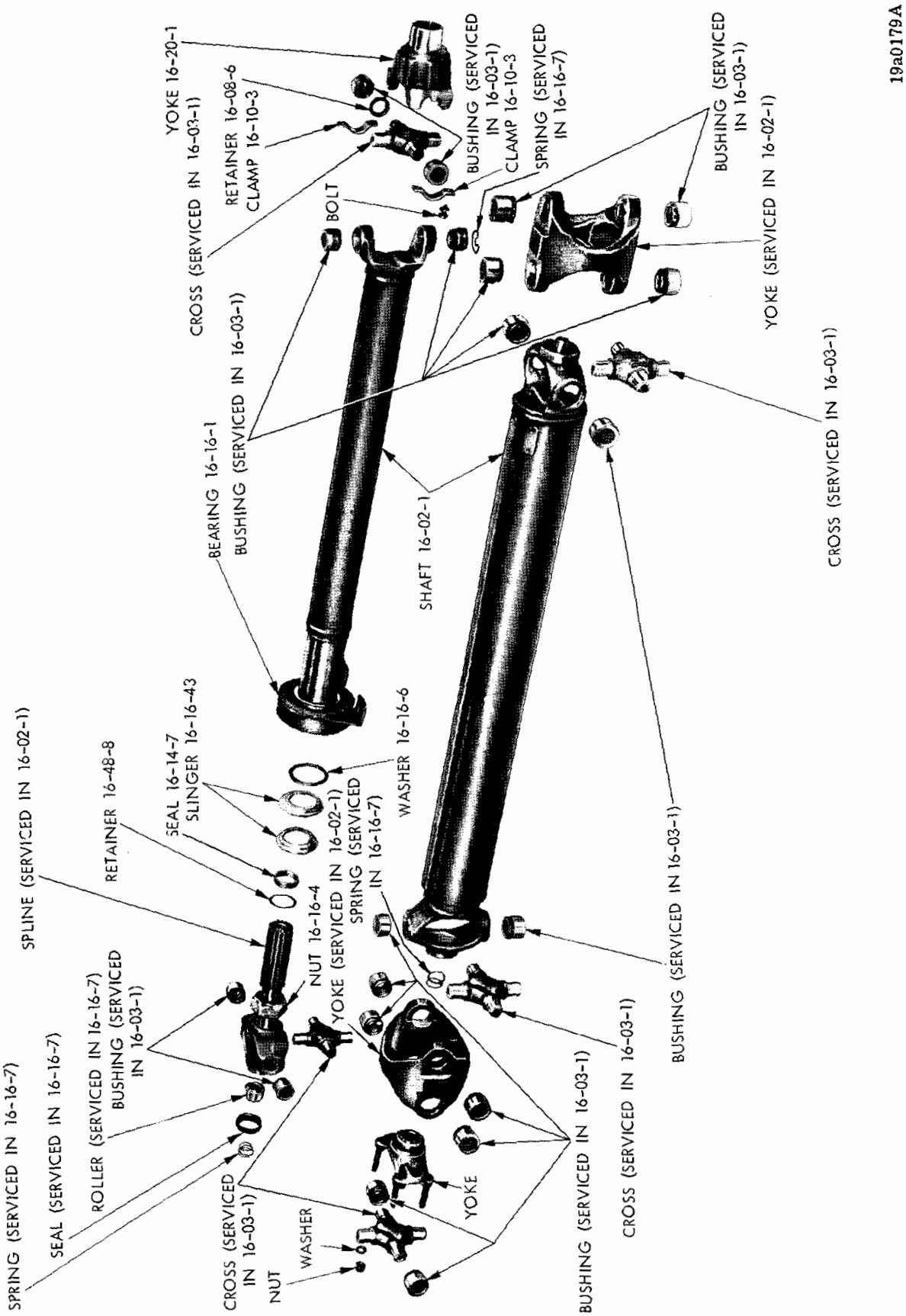

PROPELLER SHAFT CENTER BEARING - IMPERIAL

MyMopar.com

CODE	PART NAME AND DESCRIPTION	CYL	PER CAR	VALIANT / DART	PLYMOUTH BELVEDERE / DODGE CORONET	PLYMOUTH FURY / DODGE POLARA / CHRYSLER	IMPERIAL

NOTES

TYPE LETTERS Indicate:

V - Valiant	R - Belvedere	P - Plymouth	C - Chrysler
L - Dart	W - Coronet	D - Dodge	Y - Imperial

★Indicates use as required.

⊟Indicates parts not listed in any previous parts book.

Printed in U.S.A.

Prices and specifications subject to change without notice.

MyMopar.com

16-02-0 PROPELLER SHAFT

NOTE 1: When it becomes necessary to service Propeller Shafts or Front Universal Joints on cars equipped with the 426 Cubic Inch Hemispherical Engine and all V8 Engine Police Cars, it is Recommended that the Shaft be Replaced as A Complete Assembly.

NOTE 2: Length measurement of Shafts are from center of Pin hole Trans. End to Center of Bearing Hole Axle End.

CODE	MODEL	CU. IN. ENG.	TRANSMISSION	LENGTH	DIA.	U-JOINTS	PART NO.
16-02-1	SHAFT						
	V1, V2, All, L1, L2 Sta. Wgn.	170, 225, 273	3, 4 Spd. and Auto.	53 13/32 in.	3 in.	With	2530 895
	V1, V2, All, L1, L2, Sta. Wgn.	170, 225	3, 4 Spd. and Auto.	53 13/32 in.	3 in.	w/Out	2206 974
	L1, L2, except Sta. Wgn.	170, 225, 273	3, 4 Spd. and Auto.	58 13/32 in.	2 3/4 in.	With	2405 880
	L1, L2, except Sta. Wgn.	170, 225, 273	3, 4 Spd. and Auto.	58 13/32 in.	3 in.	With	2405 879
	V2 All, L2 Sta. Wgn.	273	3 Spd. Heavy Duty	53 13/32 in.	2 3/4 in.	With	⊟2530 890
	L2 except Sta. Wgn.	273	4 Spd. and Auto.	58 3/8 in.	3 in.	With	2405 879
	V2 All, L2 Sta. Wgn.	273	4 Spd. and Auto.	53 13/32 in.	2 3/4 in.	w/Out	2206 974
	L2 except Sta. Wgn.	273	4 Spd. and Auto.	58 13/32 in.	3 in.	w/Out	2401 462
	R1, R2, All, W1, W2, Sta. Wgn.	225, 273	Auto.	53 7/8 in.	2 3/4 in.	With	⊟2533 190
	R1, R2, All, W1, W2, Sta. Wgn.	225, 273	3 Spd.	55 63/64 in.	3 in.	With	2405 631
	R1, R2, All, W1, W2, Sta. Wgn.	225, 273	3 Spd.	55 63/64 in.	3 in.	w/Out	2405 632
	W1, W2, P1, except Sta. Wgn.	225, 273	3 Spd.	56 7/8 in.	3 in.	With	2530 850
	W1, W2, P1, except Sta. Wgn.	225, 273	Auto.	54 3/4 in.	2 3/4 in.	With	⊟2533 191
	P1, Sta. Wgn.	225	3 Spd.	58 63/64 in.	3 1/4 in.	With	2405 644
	P1, Sta. Wgn.	225	Auto.	56 7/8 in.	3 in.	With	2530 850
	R2 All W2 Sta. Wgn.	318, 361, 383 426	Auto.	53 1/2 in.	2 3/4 in.	With	2533 143
	R1, R2, except Sta. Wgn., Police and Taxi	225, 273	Auto.	53 1/2 in.	2 3/4 in.	With	2533 143
	W1, W2, Sta. Wgn., Police Cars	225, 273	Auto.	53 1/2 in.	2 3/4 in.	With	2533 143
	R2 All, W2 Sta. Wgn. Police Cars	318, 361, 383	Auto.	53 1/2 in.	2 3/4 in.	With	2533 143
	R2 All, W2 Sta. Wgn.	318, 361, 383	3 Spd.	56 in.	3 in.	With	2405 634
	W2, except Sta. Wgn.	318, 361, 383	3 Spd.	56 13/16 in.	3 in.	With	2530 862
	W1, W2, except Sta. Wgn., Police and Taxi	225, 273	Auto.	54 3/8 in.	2 3/4 in.	With	2533 144
	W2, except Sta. Wgn.	318, 361, 383, 426	Auto.	54 3/8 in.	2 3/4 in.	With	2533 144
	R2 All, W2 Sta. Wgn.	361, 383, 426	4 Spd.	53 7/8 in.	3 in.	With	2405 640
	R2, W2, Hemispherical	426	Auto.	53 in.	3 in.	With	*2530 885
	Hemispherical	426	4 Spd.	53 in.	3 in.	With	*2530 868

TYPE LETTERS Indicate: V - Valiant, L - Dart, R - Belvedere, W - Coronet, P - Plymouth, D - Dodge, C - Chrysler, Y - Imperial

★Indicates use as required. Numerals in parentheses ( ) refer to notes. Printed in U.S.A.
⊟Indicates parts not listed in any previous parts book. Prices and specifications subject to change without notice.
* Indicates change or addition. March 1966 Supersedes May 1965.

MyMopar.com

16-02-0 PROPELLER SHAFT - Cont'd

CODE	MODEL	CU. IN. ENG.	TRANSMISSION	LENGTH	DIA	U-JOINTS	PART NO.
16-02-1	SHAFT - Cont'd						
	P1, P2, except Sta. Wgn.	318, 383, 426	Auto.	54 1/8 in.	2 3/4 in.	With	2533 134
	P1, P2, Sta. Wgn.	225, 318, 383, 426	Auto.	56 3/16 in.	3 in.	With	2660 588
	D2	318, 383, 413	3 Spd.	58 7/8 in.	3 1/4 in.	With	2533 154
	D2, w/4 bbl. Carb.	383, 413, 426	Auto.	56 3/16 in.	2 3/4 in.	With	* 2660 580
	D2	383, 426	4 Spd.	56 7/8 in.	3 1/4 in.	With	2530 871
	P2, Sta. Wgn.	383, 413, 426	3 Spd.	58 7/8 in.	3 1/4 in.	With	2533 154
	D2, w/2 bbl. Carb.	383	Auto.	56 3/16 in.	3 in.	With	2660 588
	D2, w/4 bbl. Carb., 2.76 to 1 Axle Ratio	318, 383	Auto.	56 3/16 in.	2 3/4 in.	With	*2660 580
	P2, except Sta. Wgn.	318, 383, 426	3 Spd.	56 7/8 in.	3 1/4 in.	With	2530 871
	P2, Sta. Wgn.	318, 383, 426	4 Spd.	56 7/8 in.	3 1/4 in.	With	2530 871
	D2, California Police	383, 413	Auto.	56 11/16 in.	3 in.	With	*2533 213
	W2, P2, except Sta. Wgn.	361, 383, 426	4 Spd.	54 3/4 in.	3 in.	With	2530 865
	C1, except Sta. Wgn.	383	Auto.	58 3/16 in.	3 in.	With	2660 590
	C1, Sta. Wgn.	383	3 Spd.	58 7/8 in.	3 1/4 in.	With	2533 154
	C1, Sta. Wgn.	383	4 Spd.	56 7/8 in.	3 1/4 in.	With	2530 871
	C1, except Sta. Wgn.	383	4 Spd.	58 7/8 in.	3 1/4 in.	With	2533 154
	C1, Sta. Wgn.	383	3 Spd.	58 7/8 in.	3 1/4 in.	With	2533 154
	C1, Sta. Wgn.	383	Auto.	56 3/16 in.	2 3/4 in.	With	*2660 580
	C2	383, 413	Auto.	58 13/32 in.	3 in.	With	2660 590
	C1, C2, except Sta. Wgn.	383, 413	3 Spd.	60 7/8 in.	3 1/4 in	With	2530 878
	C2	383, 413	4 Spd.	58 7/8 in.	3 1/4 in.	With	2533 154
	C2, C3, except Sta. Wgn.	383, 413	Auto.	55 1/4 in.	3 1/4 in.	With	2660 589
	C3, Sta. Wgn.	413	Auto.	53 11/16 in.	3 1/4 in.	With	2530 923
	C1, Sta. Wgn. w/2, 4 bbl. Carb. 2.76 to 1 Axle Ratio	383	Auto.	56 3/16 in.	2 3/4 in.	With	2660 580
	C1, except Sta. Wgn. w/2 and 4 bbl. Carb. 2.76 to 1 Axle Ratio	383	Auto.	58 1/8 in.	2 3/4 in.	With	2660 584
	Y1	413	Auto.	61 5/8 in.	---	With	2533 201

CODE	PART NAME AND DESCRIPTION	CYL	PER CAR	VALIANT / DART	PLYMOUTH BELVEDERE / DODGE CORONET	PLYMOUTH FURY / DODGE POLARA / CHRYSLER	IMPERIAL
16-02-5	BOLT, Trans. Flange, 3/8"-24 x 1 1/8" lgh., 3/4" Round Head		4	2466 208	2466 208		
	3/8"-24 x 1 1/8" lgh., Round Head		4	1942 069	1942 069	1942 069	
	Axle End, 1/4"-28 x 5/8" lgh., Hex. Head		4	2460 883	2460 883	2460 883	2460 883
	STUD, Propeller Shaft Yoke, Trans. End, Y3	8	4	---- ---	---- ---	---- ---	⊟6025 420
	NUT, Propeller Shaft Yoke Stud, Y3	8	4	---- ---	---- ---	---- ---	⊟6025 421

16-03-0 UNIVERSAL JOINT

16-03-1	JOINT PACKAGE, Ball and Pin Type, w/170, 225, 273, cu. in. Eng.		1	2298 940	2298 940	2298 940	
	w/318, 361, 383, 426 cu. in. Eng.	8	1	---- ---	2298 941	2298 941	
	Cross and Roller Type, except Y1		★	1752 624	1752 624	1752 624	
	Cross and Roller, Rear, C3		1	---- ---	---- ---	1752 624	
	CROSS and BEARING KIT, Universal Joint Needles, Constant Velocity, Y1, C3		5	---- ---	---- ---	*2533 202	*2533 202
	Front, C2, C3	8	1	---- ---	---- ---	2533 202	

TYPE LETTERS Indicate: V - Valiant, L - Dart, R - Belvedere, W - Coronet, P - Plymouth, D - Dodge, C - Chrysler, Y - Imperial

★Indicates use as required. Numerals in parentheses ( ) refer to notes. Printed in U.S.A.

⊟Indicates parts not listed in any previous parts book. Prices and specifications subject to change without notice.

March 1966 Supersedes May 1965. * Indicates change or addition.

MyMopar.com

CODE	PART NAME AND DESCRIPTION	CYL	PER CAR	VALIANT / DART	PLYMOUTH BELVEDERE / DODGE CORONET	PLYMOUTH FURY / DODGE POLARA / CHRYSLER	IMPERIAL
16-03-0	**UNIVERSAL JOINT - Cont'd**						
16-03-3	ROLLER PACKAGE		★	638 637	638 637	638 637	
16-03-7	PIN, Universal Joint, w/170, 225, 273 cu. in. Eng., 2 5/8" lgh., 19/32" dia.		1	579 445	579 445	579 445	
	w/318, 361, 383, 413, 426 cu. in. Eng., 2 7/8" lgh., 19/32" dia.	8	1	---- ---	1739 923	1739 923	
16-03-10	BALL and ROLLER		2	1739 927	1739 927	1739 927	
16-03-16	WASHER, Thrust		2	605 004	605 004	605 004	
16-03-19	COVER, Universal Grease		1	602 820			
		6	1	---- ---	2266 923		
		6	1	---- ---	---- ---	2266 923	
		8	1	---- ---	2266 922	2266 922	
16-03-20	GASKET, Universal Joint, w/170, 225, 273 cu. in. Eng.		1	1616 185	1616 185	1616 185	
	w/318, 361, 383, 426 cu. in. Eng.	8	1	---- ---	1635 098	1635 098	
16-04-0	**UNIVERSAL JOINT BODY**						
16-04-1	BODY, w/170, 225, 273 cu. in. Eng.		1	*1734 159	*1734 159	*1734 159	
	w/318, 361, 383, 426 cu. in. Eng.	8	1	---- ---	1739 920	1739 920	
16-06-0	**UNIVERSAL JOINT CENTERING BUTTON**						
16-06-1	BUTTON, Centering, w/170, 225, 273 cu. in. Eng.		1	* 629 768			
		6	1	---- ---	629 768	629 768	
	w/318, 361, 383, 426 cu. in. Eng., C1, C2	8	1	---- ---	1739 924	1739 924	
16-06-3	SPRING, Centering Button, C1, C2		2	1739 926	1739 926	1739 926	
16-07-0	**UNIVERSAL JOINT COVER**						
16-07-3	CLAMP, Dust Cover, 1 5/8" I.D.		1	870 540	870 540	870 540	
	2 1/2" I.D.		1	870 539	870 539		
	2 3/4" I.D.	8	1	1532 943	1532 943	1532 943	
16-07-4	COVER PACKAGE, Dust, w/170, 225, 273 cu. in. Eng.		1	1603 397	1603 397	1603 397	
	w/318, 361, 383, 426 cu. in. Eng.	8	1	---- ---	2275 514	2275 514	
16-08-0	**UNIVERSAL JOINT CROSS**						
16-08-6	SEAL, Dust		4	857 999	857 999	857 999	
16-08-7	RETAINER, Dust Seal		4	1739 912	1739 912	1739 912	
	Rear, C3		1	---- ---	---- ---	1739 912	
16-10-0	**UNIVERSAL JOINT CROSS ROLLER AND BUSHING**						
16-10-1	ROLLER and BUSHING		★	1739 913	1739 913	1739 913	
	Rear, C3		★	---- ---	---- ---	1739 913	
16-10-2	RETAINER, Roller and Bushing		★	858 006	858 006	858 006	
	Rear, C3		2	---- ---	---- ---	858 006	
16-10-3	CLAMP, Roller and Bushing		2	1828 824	1828 824	1828 824	
	Rear, C3		1	---- ---	---- ---	1828 824	
	Trans. End		2	---- ---	---- ---	---- ---	2533 181

TYPE LETTERS Indicate: V - Valiant, L - Dart, R - Belvedere, W - Coronet, P - Plymouth, D - Dodge, C - Chrysler, Y - Imperial

★Indicates use as required. Numerals in parentheses ( ) refer to notes. Printed in U.S.A.

⊟Indicates parts not listed in any previous parts book. Prices and specifications subject to change without notice.

* Indicates change or addition. March 1966 Supersedes May 1965.

MyMopar.com

CODE	PART NAME AND DESCRIPTION	CYL	PER CAR	VALIANT / DART	PLYMOUTH BELVEDERE / DODGE CORONET	PLYMOUTH FURY / DODGE POLARA / CHRYSLER	IMPERIAL
16-14-0	**PROPELLER SHAFT SPLINE OR SLIDING YOKE**						
16-14-1	YOKE, w/225, 273, 318, 361, 383, 413, 426 cu. in. Eng., w/Auto. Trans., except C3		1	---- ---	2405 665	⊟2660 669	
	w/383, 413 cu. in. Eng., C2, C3	8	1	---- ---	---- ---	2460 929	
	w/413 cu. in. Eng., Y1	8	1	---- ---	---- ---	---- ---	*1739 915
16-14-7	SEAL, Spline Oil		1	---- ---	---- ---	---- ---	2533 208
16-14-8	RETAINER, Spline Oil Seal		1	---- ---	---- ---	---- ---	2533 209
16-16-0	**PROPELLER SHAFT CENTER BEARING**						
16-16-1	BEARING, Centering		1	---- ---	---- ---	---- ---	2533 204
16-16-4	NUT, Centering Bearing Lock		1	---- ---	---- ---	---- ---	2533 207
16-16-6	WASHER, Bearing Lock		1	---- ---	---- ---	---- ---	2533 206
16-16-7	CENTERING REPLACEMENT KIT		★	---- ---	---- ---	---- ---	2533 203
	CENTERING REPLACEMENT KIT, C2, C3	8	1	---- ---	---- ---	2533 203	
16-16-43	SLINGER, Centering Bearing Dust		2	---- ---	---- ---	---- ---	2533 205
16-17-0	**PROPELLER SHAFT CENTER BEARING INSULATOR**						
16-17-1	INSULATOR, Center Bearing, except Cv. Cp.		1	---- ---	---- ---	---- ---	1945 831
	Cv. Cp.		1	---- ---	---- ---	---- ---	1856 942
16-20-0	**PROPELLER SHAFT FLANGE**						
16-20-1	FLANGE, Trans. Output, V1, L1, w/170, 225 cu. in. Eng., Auto. Trans.	6	1	2464 438			
	V2, L2, w/273 cu. in. Eng., Auto. Trans.	8	1	2464 438			
	V1, L1, w/170, 225 cu. in. Eng., 3 Speed Trans.	6	1	2400 964			
	V1, V2, L1, L2, w/225, 170 cu. in. Eng., 4 Speed Trans.		1	2400 977			
	R1, W1, R2, W2, P1, w/225, 273 cu. in. Eng., 3 Speed Heavy Duty Trans.	8	1	---- ---	*2400 977		
	R1, W1, P1, w/225 cu. in. Eng., 3 Speed Trans.	6	1	---- ---	2400 976		
	R2, W2, P2, w/318, 361, 383, 426, cu. in. Eng., 3 Speed Trans.	8	1	---- ---	*2400 978		
	R2, W2, w/361, 383, 413 cu. in. Eng., 4 Speed Trans.	8	1	---- ---	2400 978		
	R1, W1, w/170 cu. in. Eng., Auto. Trans.	6	1	---- ---	2466 762		
	R2, W2, w/273 cu. in. Eng., Auto. Trans.	8	1	---- ---	2466 762		
	R1, W1, P1, w/225 cu. in. Eng., Auto. Trans.	6	1	---- ---	2466 762	2466 762	
	D2, C1, C2, w/361, 383, 413 cu. in. Eng., 3 Speed Trans.	8	1	---- ---	---- ---	2400 978	
	P2, D2, C1, w/361, 383, 413 cu. in. Eng., 4 Speed Trans.	8	1	---- ---	---- ---	2400 978	
	YOKE, Trans. Output	8	1	---- ---	---- ---	---- ---	2405 674
	FLANGE PACKAGE, Axle Pinion, w/27 Splines		1	2240 614			
	YOKE, Axle Pinion, w/Oil Seal GUARD, 10 Splines		1	---- ---	2404 479	2404 479	
			1	---- ---	---- ---	---- ---	2467 256
16-20-8	NUT PACKAGE, Trans. Output Flange, includes WASHER		1	2298 967	2298 967	2298 967	2298 967
	NUT, Axle Pinion Flange		1	1556 638	1556 638	1556 638	1556 638
	WASHER, Axle Flange		1	1556 556	1556 556	1556 556	1556 556

TYPE LETTERS Indicate: V - Valiant, L - Dart, R - Belvedere, W - Coronet, P - Plymouth, D - Dodge, C - Chrysler, Y - Imperial

★Indicates use as required. Numerals in parentheses ( ) refer to notes. Printed in U.S.A.

⊟Indicates parts not listed in any previous parts book. Prices and specifications subject to change without notice.

March 1966 Supersedes May 1965. * Indicates change or addition.

MyMopar.com

GROUP 17 - SPRINGS

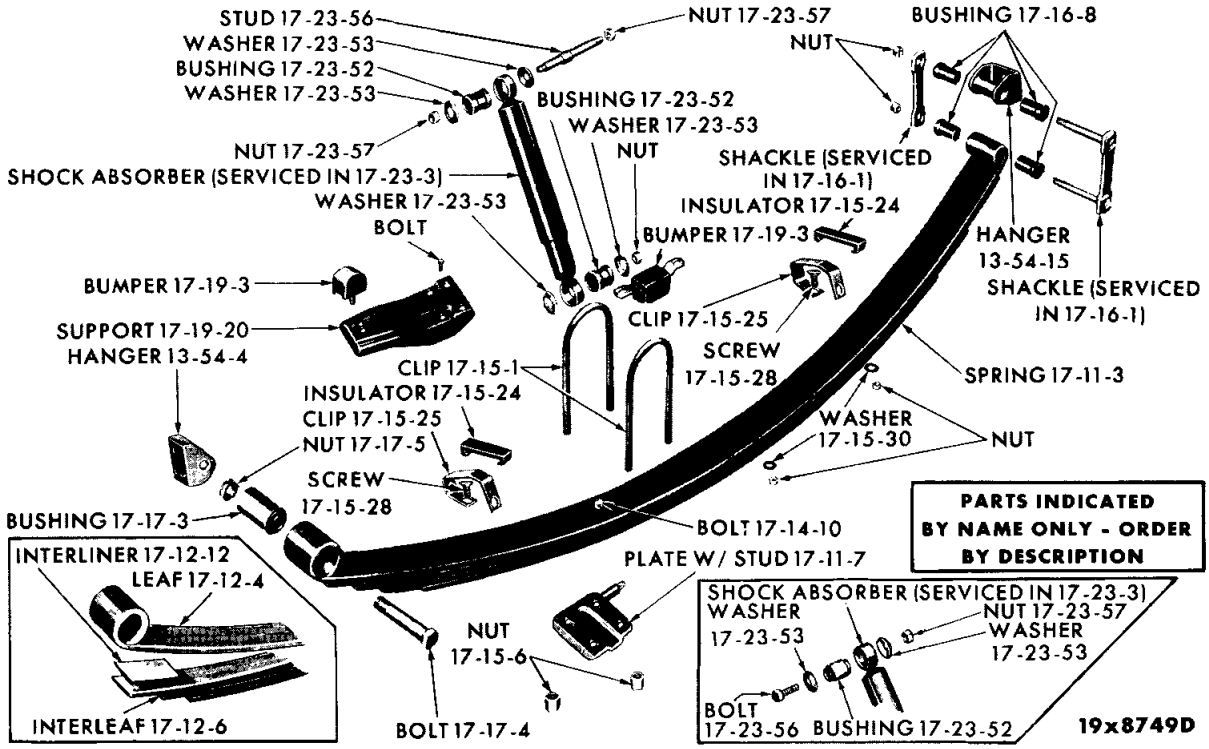

REAR SPRING - VALIANT, DART, BELVEDERE AND CORONET

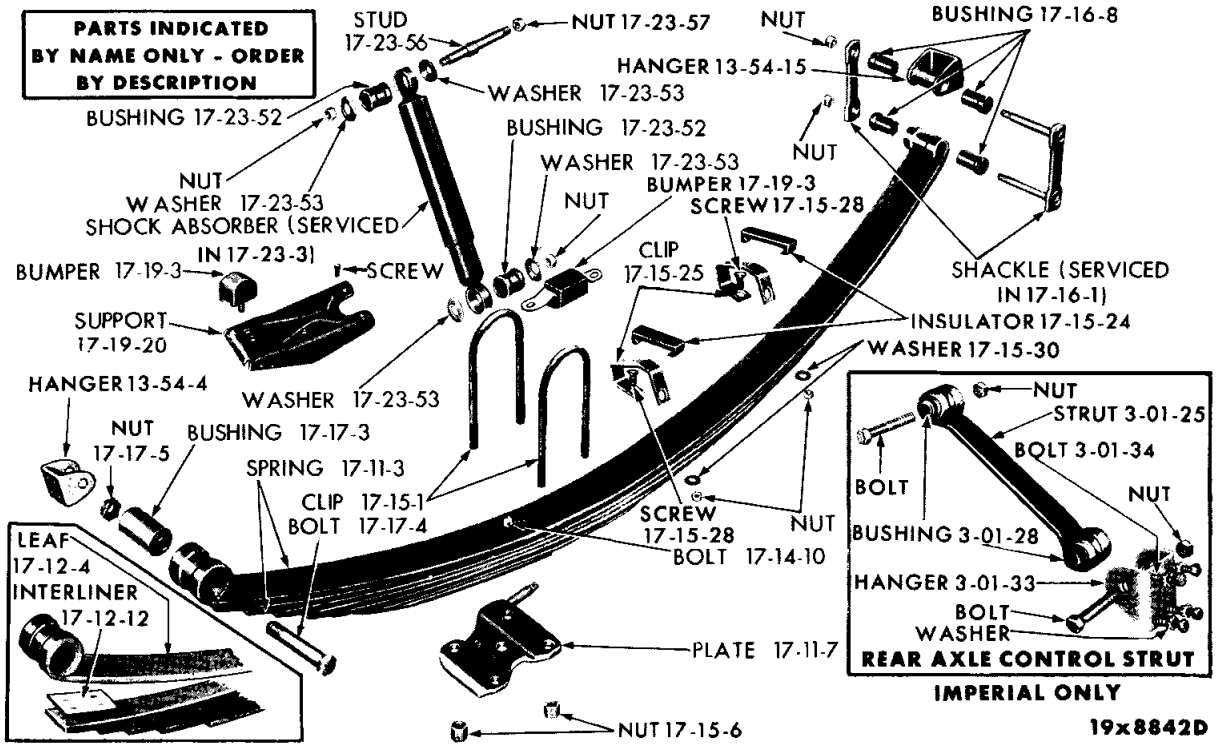

REAR SPRING - PLYMOUTH, DODGE, CHRYSLER AND IMPERIAL

MyMopar.com

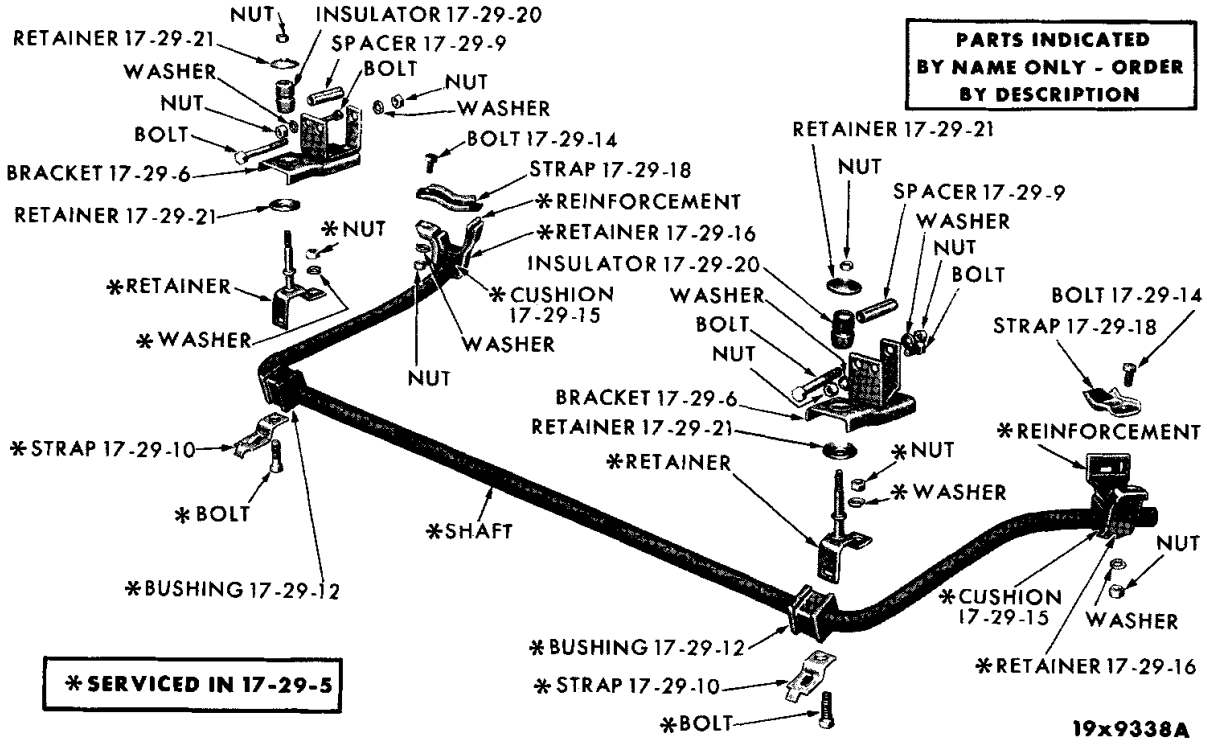

SWAY ELIMINATOR - BELVEDERE AND CORONET

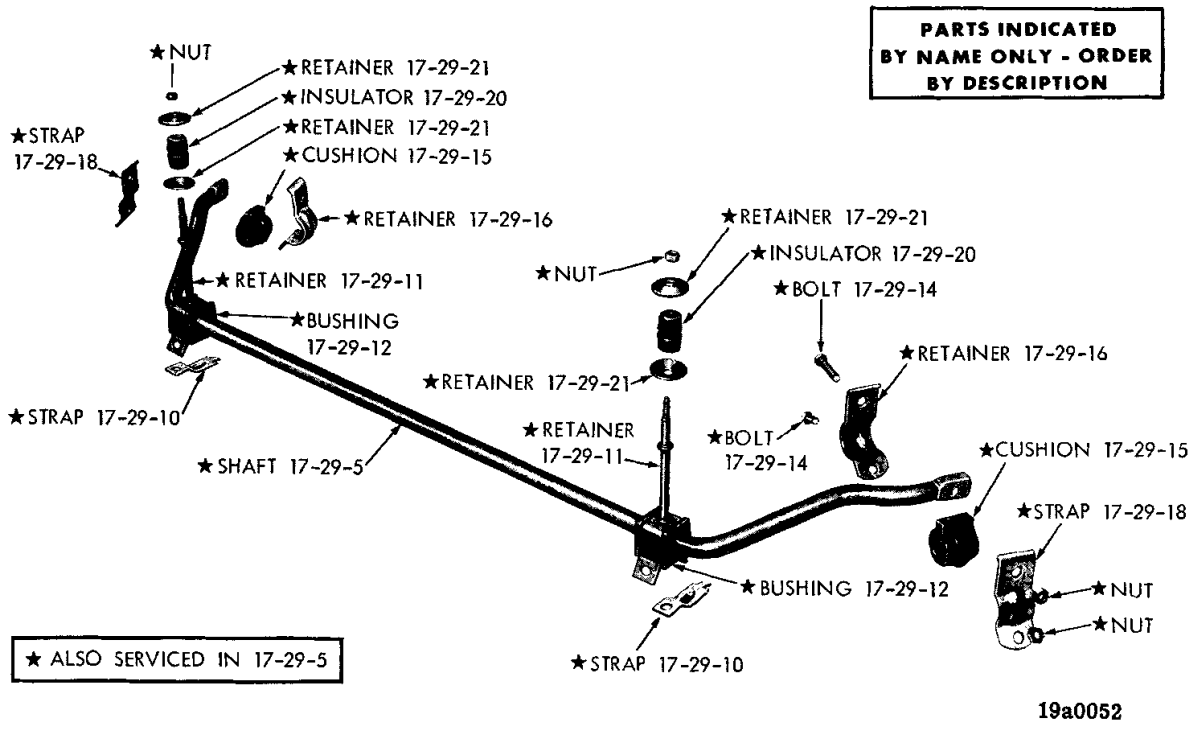

SWAY ELIMINATOR - PLYMOUTH, DODGE AND CHRYSLER

MyMopar.com

CODE	PART NAME AND DESCRIPTION	CYL	PER CAR	VALIANT / DART	PLYMOUTH BELVEDERE / DODGE CORONET	PLYMOUTH FURY / DODGE POLARA / CHRYSLER	IMPERIAL
17-11-0	**REAR SPRING**						
17-11-3	SPRING, w/BUSHING, Std., except Sta. Wgn., 170 cu.in. Eng.	6	2	2421 761			
	Std., except Sta. Wgn., 225 cu.in Eng.	6	2	2421 739			
	Std., Sta. Wgn., 170, 225, cu.in. Eng.	6	2	2421 742			
	Std., Barracuda		2	2525 474			
	Std., except Sta. Wgn., 273 cu.in. Eng.	8	2	2525 474			
	Std., Sta. Wgn., 273 cu.in. Eng.	8	2	2495 087			
	w/4 Barrel Carburetor	8	2	2585 242			
	Std., 2 D., 2 D.H.T., 4 D.	6	2	---- ---	2585 251		
	Std., Cv. Cp.	6	2	---- ---	2525 093		
	Std., Cv. Cp., 273, 318 cu. in. Eng.	8	2	---- ---	*2585 251		
	Std., 2 D. H.T., 4 D., 273, 318 cu.in. Eng.	8	2	---- ---	*2525 093		
	Std., Sta. Wgn., 2 Seat		1	---- ---	2585 255-6		
	Std., Sta. Wgn., 3 Seat		1	---- ---	2585 256-7		
	Std., 2 D., 2 D.H.T., 4 D., 361, 383, cu.in. Eng.	8	2	---- ---	2585 253		
	Std., Cv.Cp., 361,383, cu.in. Eng.	8	2	---- ---	2525 094		
	Except Sta. Wgn., 426 cu. in. Eng.	8	1	---- ---	*2495 060-1		
	Std., except Sta. Wgn., P1, 225 cu.in. Eng.	6	2	---- ---	---- ---	2585 225	
	Std., except Sta. Wgn., P2, 318 cu. in. Eng.	8	2	---- ---	---- ---	2585 354	
	Std., except Sta. Wgn., P2, 383 cu.in. Eng.	8	2	---- ---	---- ---	2585 234	
	Std., except Sta. Wgn., P2, 426 cu.in. Eng.	8	2	---- ---	---- ---	2585 231	
	Std., except Sta. Wgn., D 2 UP TO Serial No. 145004	8	2	---- ---	---- ---	*2585 238	
	Std., except Sta. Wgn., D 2 AFTER Serial No. 145004	8	1	---- ---	---- ---	*2585 236-7	
	Std., except Sta. Wgn., D2, 426 cu. in. Eng.	8	2	---- ---	---- ---	2585 239	
	Std., except Sta. Wgn., 383, 413 cu. in. Eng., Right	8	1	---- ---	---- ---	2585 237	
	Std., except Sta. Wgn., 383, 413 cu. in. Eng., Left	8	1	---- ---	---- ---	2585 582	
	Std., 2 D.H.T., 4 D.H.T., 4 D., C2, 383, 413 cu.in. Eng.	8	1	---- ---	---- ---	2585 229-30	
	Std., C3, 2 D.H.T., 4 D.H.T., 4 D., Right	8	1	---- ---	---- ---	2585 230	
	Std., C3, 2 D.H.T., 4 D.H.T., 4 D., Left	8	1	----	---- ---	2585 581	
	Std., Sta. Wgn., 2 Seat		1	---- ---	---- ---	2585 232-3	
	Std., Sta. Wgn., 3 Seat, C3, Rt	8	1	---- ---	---- ---	*2585 392	
	Std., Sta. Wgn., 3 Seat, C3, Lt.	8	1	---- ---	---- ---	*2585 621	
	Std., Sta. Wgn., 3 Seat, Right, except C3		1	---- ---	---- ---	*2585 233	
	Std., Sta. Wgn., 3 Seat, Left, except C3		1	---- ---	---- ---	*2585 392	
	Std., except Cv.Cp., Right		1	---- ---	---- ---	---- ---	2421 758
	Std., except Cv.Cp., Left		1	---- ---	---- ---	---- ---	2495 025
	Std., Cv.Cp., Right		1	---- ---	---- ---	---- ---	2448 399
	Std., Cv.Cp., Left		1	---- ---	---- ---	---- ---	2495 078
	Heavy Duty, except Sta. Wgn., 170, 225, cu.in. Eng.	6	2	2421 741			
	Heavy Duty, Sta. Wgn., 170, 225, cu.in. Eng.	6	2	2275 857			
	Heavy Duty, Barracuda		2	2495 086			
	Heavy Duty, except Sta. Wgn.	8	2	2495 086			
	Heavy Duty, Sta. Wgn.	8	2	2495 088			
	Heavy Duty, 2 D., 2 D.H.T., 4 D., 225 cu.in. Eng.	6	2	---- ---	2585 252		
	Heavy Duty, Cv.Cp.	6	2	---- ---	2525 095		
	Heavy Duty, 2 D., 2 D.H.T., 4 D., 273, 318, 361, 383, 426, cu.in. Eng.	8	2	---- ---	2525 095		
	Heavy Duty, Cv.Cp., 273, 318, 361, 383, 426, cu.in. Eng.	8	2	---- ---	2585 252		
	Heavy Duty, Sta. Wgn., 225, 273, 318, 361, 383, 426, cu.in. Eng., Right		1	---- ---	2585 254		
	Heavy Duty, Sta. Wgn., 225, 273, 318, 361, 383, 426, cu.in. Eng., Left		1	---- ---	2585 235		

TYPE LETTERS Indicate: V - Valiant, L - Dart, R - Belvedere, W - Coronet, P - Plymouth, D - Dodge, C - Chrysler, Y - Imperial

★Indicates use as required. Numbers in [illegible] refer to notes. Printed in U.S.A.

⊟Indicates parts not listed in any previous parts book. Prices and specifications subject to change without notice.

* Indicates change or addition. March 1966 Supersedes May 1965.

MyMopar.com

CODE	PART NAME AND DESCRIPTION	CYL	PER CAR	VALIANT / DART	PLYMOUTH BELVEDERE / DODGE CORONET	PLYMOUTH FURY / DODGE POLARA / CHRYSLER	IMPERIAL
17-11-0	**REAR SPRING - Cont'd**						
17-11-3	SPRING, w/BUSHING - Cont'd						
	Heavy Duty, except Sta. Wgn., P1, P2, 225, 318, 383, cu. in. Eng.		2	---- ---	---- ---	2585 231	
	Heavy Duty, D, 4 D., Cal. Police only	8	2	---- ---	---- ---	2585 399	
	Heavy Duty, except Sta. Wgn., D2, 383, 413, 426, cu. in. Eng.	8	2	---- ---	---- ---	2585 240	
	Heavy Duty, 2 D. H. T., 4 D. H. T., 4 D., C1, C2, 383, 413, cu. in. Eng.	8	2	---- ---	---- ---	2585 241	
	Heavy Duty, C3, 2 D. H. T., 4 D. H. T., 4 D	8	2	---- ---	---- ---	2585 583	
	Heavy Duty, Sta. Wgn., C3, Rt.	8	1	---- ---	---- ---	*2585 227	
	Heavy Duty, Sta. Wgn., C3, Lt.	8	1	---- ---	---- ---	⊟2585 622	
	Heavy Duty, Sta. Wgn., except C3		1	---- ---	---- ---	*2585 226-7	
	Heavy Duty, Right		1	---- ---	---- ---	---- ---	2421 762
	Heavy Duty, Left		1	---- ---	---- ---	---- ---	2495 079
17-11-5	PLATE, Spring Seat Angle, Sta. Wgn., 1º w/Part No. Stamped #2122857		2	---- ---	2122 857		
	1º w/Part No. Stamped #2539474		★	2539 474	2539 474	2539 474	2539 474
	2º w/Part No. Stamped #1673458		★	1673 458	1673 458	1673 458	1673 458
	3º w/Part No. Stamped #2539475		★	2539 475	2539 475	2539 475	2539 475
17-11-7	PLATE, w/STUD		1	2071 766-7	1856 346-7	1856 346-7	1856 346-7
17-12-0	**REAR SPRING LEAF**						
17-12-4	LEAF, w/BUSHING, Main, Std., 170 cu. in. Eng.	6	2	2448 351			
	Std., 225 cu. in. Eng., except Sta. Wgn.	6	2	2448 350			
	Std., Sta. Wgn., 225 cu. in. Eng.	6	2	2448 351			
	Std., Barracuda		2	2525 020			
	Std.	8	2	2525 020			
	V2, L2, w/4 Barrel Carburetor, except Sta. Wgn.	8	2	2585 250			
	Std.		2	---- ---	2495 027		
	Std., P, except Sta. Wgn.		2	---- ---	---- ---	2585 244	
	Std. D2, C1, except Sta. Wgn.	8	2	---- ---	---- ---	2585 248	
	Std., C2, C3, except Sta. Wgn.	8	2	---- ---	---- ---	2585 245	
	Std. Sta. Wgn.	8	2	---- ---	---- ---	2585 247	
	Std.		2	---- ---	---- ---	---- ---	2448 706
	Heavy Duty, except Sta. Wgn.	6	2	2196 784			
	Heavy Duty, Sta. Wgn.	6	2	2196 786			
	Heavy Duty, Barracuda		2	2525 021			
	Heavy Duty	8	2	2525 021			
	Heavy Duty, except Sta. Wgn.		2	---- ---	2495 028		
	Heavy Duty, Sta. Wgn.		2	---- ---	2495 029		
	Heavy Duty, P, except Sta. Wgn.		2	---- ---	---- ---	2585 243	
	Heavy Duty, D2, C, except Sta. Wgn.	8	2	---- ---	---- ---	2585 246	
	Heavy Duty, Sta. Wgn.		2	---- ---	---- ---	2585 249	
	Heavy Duty		2	---- ---	---- ---	---- ---	2448 707
17-12-6	INTERLEAF		★	---- ---	2403 737	2403 737	2123 781
17-12-12	INTERLINER, 2 1/2" x 3 1/2", P		★	*1948 396	---- ---	*1948 396	
	2 1/2" x 2 1/2"		★	2122 359	2122 359	2122 359	2122 359
	2 1/2" x 3 1/2"		★	---- ---	2123 785	2123 785	2123 785
17-14-0	**REAR SPRING CENTER BOLT**						
17-14-10	BOLT		★	1944 361	1944 361	1944 361	1944 361

TYPE LETTERS Indicate: V - Valiant, L - Dart, R - Belvedere, W - Coronet, P - Plymouth, D - Dodge, C - Chrysler, Y - Imperial

★Indicates use as required. Numerals in parentheses ( ) refer to notes. Printed in U.S.A.

⊟Indicates parts not listed in any previous parts book. Prices and specifications subject to change without notice.

March 1966 Supersedes May 1965. * Indicates change or addition.

MyMopar.com

CODE	PART NAME AND DESCRIPTION	CYL	PER CAR	VALIANT / DART	PLYMOUTH BELVEDERE / DODGE CORONET	PLYMOUTH FURY / DODGE POLARA / CHRYSLER	IMPERIAL
17-15-0	**REAR SPRING CLIP**						
17-15-1	CLIP, 5 3/8" lgh.		★	2071 771			
	5 7/8" lgh.		★	2071 787			
	7" lgh.		★	---- ---	1489 747	1489 747	1489 747
	7 3/8" lgh.		★	---- ---	1635 666	1635 666	1635 666
17-15-6	NUT		8	*6023 021	6023 021	6023 021	6023 021
17-15-24	INSULATOR, Alignment Clip		★	1829 929	1829 929	1829 929	1829 929
17-15-25	CLIP, Alignment 1" lgh.		★	1820 812	1820 812	1820 812	1820 812
	1 1/4" lgh.		★	1820 152	1820 152	1820 152	
	1 1/2" lgh.		★	1820 153	1820 153	1820 153	1820 153
	1 7/8" lgh.	8	★	---- ---	---- ---	---- ---	1820 813
17-15-28	SCREW, Alignment		★	1485 510	1485 510	1485 510	1485 510
17-15-30	WASHER, Screw		★	1530 398	1530 398	1530 398	1530 398
17-16-0	**REAR SPRING SHACKLE**						
17-16-1	SHACKLE and BUSHING PACKAGE		2	2585 264			
	Except Sta. Wgn.		2	---- ---	2585 263		
	Sta. Wgn.		2	---- ---	2585 265		
	Except Sta. Wgn.		2	---- ---	---- ---	2585 262	2585 262
	Sta. Wgn.		2	---- ---	---- ---	2525 469	
	D, 4 D., Cal., Police only	8	2	---- ---	---- ---	2525 469	
17-16-8	BUSHING, Shackle		8	1940 725	1400 269	1400 269	1400 269
17-17-0	**REAR SPRING SILENT BLOCK**						
17-17-3	BUSHING, Front Pivot	6	2	2071 763			
	Barracuda		2	1948 869			
	V2, L2	8	2	1948 869	1948 869	1948 869	2403 245
	R2, W2, 426 cu. in. Eng., Hemispherical	8	2	---- ---	2403 245		
	D, 4 D., Cal., Police only	8	2	---- ---	---- ---	2403 245	
17-17-4	BOLT	6	2	2071 761			
	Barracuda		2	1948 876			
		8	2	1948 876			
			2	---- ---	1948 876	1948 876	1948 876
17-17-5	NUT	6	2	2071 772			
		8	2	1948 877			
	Barracuda		2	1948 877	1948 877	1948 877	1948 877
17-19-0	**REAR SPRING BUMPER**						
17-19-3	BUMPER, Axle Drive Pinion Carrier		1	2403 906	2403 906	2403 906	2403 906
	R2, W2, 426 cu. in. Eng., Hemispherical	8	1	---- ---	1948 338		
	D, 4 D., Cal., Police only	8	1	---- ---	---- ---	2539 096	
	Side Rail, Rear Axle		2	2206 940	2462 040	2462 043	2206 941
	R2, W2, 426 cu. in. Eng., Hemispherical	8	2	---- ---	2403 868		
17-19-4	BRACKET, Center Floor Pan Pinion Carrier		1	2242 396			
17-19-6	NUT, Axle Drive Pinion Carrier Bumper Retainer, R2, W2, 426 cu. in. Eng., Hemispherical		1	---- ---	1943 997	1943 997	

TYPE LETTERS Indicate: V - Valiant, L - Dart, R - Belvedere, W - Coronet, P - Plymouth, D - Dodge, C - Chrysler, Y - Imperial

★Indicates use as required. Numerals in parentheses ( ) refer to notes. Printed in U.S.A.

⊟Indicates parts not listed in any previous parts book. Prices and specifications subject to change without notice.

* Indicates change or addition. March 1966 Supersedes May 1965.

MyMopar.com

CODE	PART NAME AND DESCRIPTION	CYL	PER CAR	VALIANT / DART	PLYMOUTH BELVEDERE / DODGE CORONET	PLYMOUTH FURY / DODGE POLARA / CHRYSLER	IMPERIAL
17-19-0	**REAR SPRING BUMPER - Cont'd**						
17-19-10	PLATE, Side Rail Rear Axle Bumper		2	2206 883			
17-19-11	SPACER, Side Rail Rear Axle Bumper, R2, W2, 426 cu. in. Eng. Hemispherical . .	8	2	---- ---	2462 178		
	SCREW, w/WASHER, R2, W2, 426 cu. in. Eng., Hemispherical	8	4	---- ---	⊟6025 336		
17-19-20	SUPPORT, Pinion Carrier Bumper		1	2403 901	---- ---	---- ---	2462 184
	w/1 1/2" Cutout		1	---- ---	---- ---	*1948 351	
	w/o Cutout		1	---- ---	---- ---	*2462 103	
	R		1	---- ---	2403 903		
	W, except Sta. Wgn.		1	---- ---	2462 176		
	W, Sta. Wgn.		1	---- ---	2403 903		
	R2, W2, 426 cu. in. Eng., Hemispherical . .	8	1	---- ---	2403 867		
	BOLT, Axle Bumper Attaching		4	---- ---	---- ---	6023 011	
	REINFORCEMENT, Center Floor Pan		1	---- ---	2483 908	2481 392	
17-23-0	**SHOCK ABSORBER**						
17-23-3	ABSORBER PACKAGE, Shock Front, Std. . . .		2	2298 803	2525 039		
	Front Std., except Cv. Cp. and Sta. Wgn., P. .		2	---- ---	---- ---	*2525 459	
	Front Std., except Cv. Cp. and Sta. Wgn., D, C.	8	2	---- ---	---- ---	⊟2585 623	
	Front Std., Cv. Cp. and Sta. Wgn.		2	---- ---	---- ---	2525 460	
	Front Std., except Cv. Cp.		2	---- ---	---- ---	---- ---	2298 805
	Front Std., Cv. Cp.		2	---- ---	---- ---	---- ---	2298 807
	Front, Heavy Duty		2	2298 804	2275 883	2525 461	
	Front, Heavy Duty, 2 D. H. T., 4 D. H. T. . .		2	---- ---	---- ---	---- ---	2298 807
	Rear, Std.		2	2240 317	2525 040		
	Rear, Std., except Cv. Cp. and Sta. Wgn. . .		2	---- ---	---- ---	2525 431	
	Rear, Std., Cv. Cp. and Sta. Wgn.		2	---- ---	---- ---	2525 430	
	Rear Std., 2 D. H. T., 4 D. H. T.		2	---- ---	---- ---	---- ---	2298 900
	Rear Std., Cv. Cp.		2	---- ---	---- ---	---- ---	2240 360
	Rear, Heavy Duty.		2	2298 912	2275 849		
	Rear, Heavy Duty, 1 3/8" dia.		2	---- ---	2275 848	2525 444	
	Rear, Heavy Duty		2	---- ---	---- ---	2525 432	
	Rear, Heavy Duty, 2 D. H. T., 4 D. H. T. . . .		2	---- ---	---- ---	---- ---	2240 360
17-23-52	BUSHING, Front Shock Absorber Upper Mounting		2	2206 923	2206 923	2206 923	2206 923
	Lower, Mounting		2	1635 588	1635 588	2462 104	1635 588
	Rear, Upper		2	1319 902	2201 554	2201 554	
	Rear, Lower		★	1319 902	1319 902	1319 902	1319 902
17-23-53	WASHER, Pivot Bushing Retainer Inner, Rear .		★	1319 555	1319 555	1319 555	1319 555
	Outer, Rear		★	1319 554	1319 554	1319 554	1319 554
	Upper, Front		★	2206 925	2206 925	2206 925	2206 925
17-23-56	STUD, Upper Mounting, Rear		2	2071 714	---- ---	---- ---	1948 884
	BOLT, Upper Mounting, Rear		2	---- ---	180 190	180 190	
17-23-57	NUT, Rear Upper Mounting Stud		2	6023 890	---- ---	---- ---	6023 890
	Front Pivot Bushing Bolt	6	2	6022 831			
	WASHER, Rear Upper Mounting Stud		2	6024 248			
17-24-0	**SHOCK ABSORBER SUPPORT**						
17-24-28	SUPPORT, Front Shock Absorber		2	---- ---	---- ---	2461 876	1675 821

TYPE LETTERS Indicate: V - Valiant, L - Dart, R - Belvedere, W - Coronet, P - Plymouth, D - Dodge, C - Chrysler, Y - Imperial

★Indicates use as required. Numerals in parentheses ( ) refer to notes. Printed in U.S.A.

⊟Indicates parts not listed in any previous parts book. Prices and specifications subject to change without notice.

March 1966 Supersedes May 1965. * Indicates change or addition.

MyMopar.com

CODE	PART NAME AND DESCRIPTION	CYL	PER CAR	VALIANT / DART	PLYMOUTH BELVEDERE / DODGE CORONET	PLYMOUTH FURY / DODGE POLARA / CHRYSLER	IMPERIAL
17-29-0	**SWAY ELIMINATOR SHAFT**						
17-29-5	SHAFT		1	2071 652	1857 906	2462 603	1672 964
17-29-6	BRACKET, Support		1	---- ---	1858 100-1		
			2	---- ---	---- ---	2461 661	
	BRACKET PACKAGE		1	2585 559			
17-29-9	SPACER, Support Bracket		2	---- ---	1858 105		
17-29-10	STRAP, Bushing		2	1673 065	1673 065	1673 065	1673 065
17-29-11	RETAINER, Bushing		2	---- ---	---- ---	2462 566	1673 060
17-29-12	BUSHING, Shaft		2	---- ---	1824 935	2462 581	1824 936
17-29-13	REINFORCEMENT, Cushion		2	---- ---	---- ---	---- ---	1672 989
17-29-14	BOLT, Cushion Strap		2	---- ---	6023 012	---- ---	1824 934
17-29-15	CUSHION, Shaft		2	---- ---	1731 341	2462 570	1673 090
17-29-16	RETAINER, Cushion		2	---- ---	1672 988	2462 571	1672 988
17-29-17	LINK, Insulator, Both Ends Threaded		2	*2071 575			
	One End Threaded		2	*2071 745			
17-29-18	STRAP, Cushion		2	---- ---	1857 911	2462 572	2207 036
17-29-20	INSULATOR, Link		8	2071 604			
			2	---- ---	1734 315	1734 315	1734 315
17-29-21	RETAINER, Insulator		8	2071 611			
			4	---- ---	1558 352	1558 352	1558 352

NOTES

TYPE LETTERS Indicate: V - Valiant, L - Dart, R - Belvedere, W - Coronet, P - Plymouth, D - Dodge, C - Chrysler, Y - Imperial

★Indicates use as required. Numerals in parentheses ( ) refer to notes. Printed in U.S.A.

⊟Indicates parts not listed in any previous parts book. Prices and specifications subject to change without notice.

* Indicates change or addition. March 1966 Supersedes May 1965.

MyMopar.com

CODE	PART NAME AND DESCRIPTION	CYL	PER CAR	VALIANT / DART	PLYMOUTH BELVEDERE / DODGE CORONET	PLYMOUTH FURY / DODGE POLARA / CHRYSLER	IMPERIAL

NOTES

TYPE LETTERS Indicate: V - Valiant, L - Dart, R - Belvedere, W - Coronet, P - Plymouth, D - Dodge, C - Chrysler, Y - Imperial

★Indicates use as required. Numerals in parentheses ( ) refer to notes. Printed in U.S.A.

⊟Indicates parts not listed in any previous parts book. Prices and specifications subject to change without notice.

Nov. 30, 1964 Supersedes Sept. 4, 1964.

MyMopar.com

GROUP 18 - STANDARD PARTS

The Standard Parts listed herein are furnished only in carton quantities, and should be ordered in these quantities or multiples thereof.

BALL - STEEL

Plate 18-1

Diameter	Part No.	Ctn. Qty.	Diameter	Part No.	Ctn. Qty.
1/4	104 918	50	5/8	104 924	10
5/16	104 919	50	7/8	104 927	5
11/32	119 282	25			

BOLT - HEXAGON HEAD

National Coarse Thread

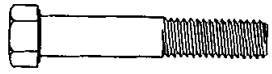

Plate 18-2

Length	Diameter & Thread 1/4-20 Part No.	1/4-20 Carton Qty.	5/16-18 Part No.	5/16-18 Carton Qty.	3/8-16 Part No.	3/8-16 Carton Qty.	7/16-14 Part No.	7/16-14 Carton Qty.	1/2-13 Part No.	1/2-13 Carton Qty.
1/2	180 016	50			180 116	25			180 166	25
5/8	180 018	100								
3/4	180 020	50	180 077	25						
1	180 022	50	180 079	25	180 122	25				
1-1/4	180 024	50	180 081	25	180 124	25			180 175	10
1-1/2	180 034	25			180 126	25	180 149	10		
1-3/4			181 094	25			180 151	10		
2					181 126	25			180 181	10
2-1/2	180 048	10					180 157	10		
3			180 113	10			180 160	10	180 190	10
3-3/4					186 284	10				
4			189 298	10	186 285	10	180 165	10		
5							272 406	50		

BOLT - HEXAGON HEAD

National Fine Thread

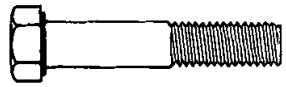

Plate 18-3

Length	Diameter & Thread 1/4-28 Part No.	1/4-28 Carton Qty.	5/16-24 Part No.	5/16-24 Carton Qty.	3/8-24 Part No.	3/8-24 Carton Qty.	7/16-20 Part No.	7/16-20 Carton Qty.	1/2-20 Part No.	1/2-20 Carton Qty.	9/16-18 Part No.	9/16-18 Carton Qty.
1/2	181 561	50			181 627	25			181 683	25		
5/8			181 593	25								
3/4			181 595	25								
1	181 568	50	181 608	25	181 637	25			181 696	25		
1-1/4			181 610	25	181 639	25	181 668	25	181 698	10		
1-1/2			181 614	25	181 643	25	181 670	10	181 700	10	181 727	10
1-3/4	181 577	25			181 646	25	181 672	10	660 378	10		
2	181 579	25	181 620	25			181 674	10	181 705	10	181 731	10
2-1/4											2228 700	10
2-1/2					181 650	10			181 709	10		
2-3/4			181 623	10								
3			182 703	10	181 652	10			181 711	10		
					186 310	10	181 680	10	182 788	10		
4							181 682	10			181 747	10
4-1/4							187 612	10				

▲ - Indicates bright finish.

MyMopar.com

BUSHING
Pipe Reducing

Plate 18-4

Ext. Thd.	Int. Thd.	Part No.	Carton Qty.
1/4	1/8	119 930	5
3/8	1/8	119 923	5
1/2	1/4	144 051	5
1/2	3/8	120 322	5

CONNECTOR
Flared Tube

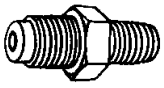

Plate 18-6

Diameter	Taper Thd.	Thread	Part No.	Carton Qty.
1/4	1/8	7/16-20	118 748	5
5/16	1/8	1/2-20	118 749	5
3/8	1/4	5/8-20	118 750	5
7/16	1/4	11/16-16	118 751	5
1/2	3/8	3/4-16	118 752	5

ELBOW
Ball, Sleeve Tubing

Plate 18-10

Diameter	Taper Thd.	Thread	Part No.	Carton Qty.
1/4	1/8	7/16-24	114 632	10
5/16	1/8	1/2-24	114 633	10
3/8	1/4	9/16-24	140 305	10

ELBOW
Inverted Flared Tube, 45 Degree

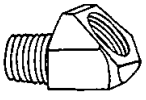

Plate 18-12

Diameter	Taper Thd.	Thread	Part No.	Carton Qty.
3/16	1/8	3/8-24	127 829	5
1/4	1/8	7/16-24	125 859	5
5/16	1/8	1/2-20	116 341	5
3/8	1/4	5/8-18	143 338	5

CONNECTOR
Ball Sleeve Tubing

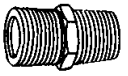

Plate 18-5

Tube Dia.	Taper Thd.	Thd. Size	Part No.	Carton Qty.
5/16	1/8	1/2-24	114 629	10

CONNECTOR
Inverted Flared Tube

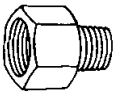

Plate 18-7

Diameter	Taper Thd.	Thread	Part No.	Carton Qty.
1/8	1/8	5/16-28	137 403	5
1/4	1/8	7/16-24	111 345	5
5/16	1/8	1/2-20	137 406	5
3/8	1/4	5/8-18	137 407	5
1/2	3/8	3/4-18	143 426	5

DRAIN COCK

Plate 18-9

Diameter	Part No.	Carton Qty.
1/4	103 647	5

ELBOW
Flared Tube

Plate 18-11

Diameter	Taper Thd.	Thread	Part No.	Carton Qty.
3/16	1/8	3/8-24	121 339	5

ELBOW
Inverted Flared Tube, 90 Degree

Plate 18-13

Diameter	Taper Thd.	Thread	Part No.	Carton Qty.
3/16	1/8	3/8-24	137 420	5
1/4	1/8	7/16-24	137 421	5
5/16	1/8	3/8-20	137 422	5
5/16	1/4	1/2-18	143 343	5
3/8	1/4	5/8-18	137 423	5
7/16	1/4	11/16-18	137 424	5
1/2	1/4		188 947	5

MyMopar.com
▲ - Indicates bright finish.

ELBOW

Pipe, 90 Degree

Plate 18-14

Diameter	Part No.	Carton Qty.
1/4	105 413	5

FITTING - LUBRICATING

Ball and Spring Type

Plate 18-17

Length	Diameter & Thread	Part No.	Carton Qty.
7/8	1/4-28	110 309	10
1	1/4-28	110 308	10

FITTING - LUBRICATING

Straight Type

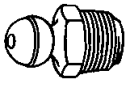

Plate 18-19

Thread & Length	Part No.	Carton Qty.
1/8 x 43/64	9411 010	10

FITTING - LUBRICATING

Straight Type C

Plate 18-21

Length	Diameter & Thread	Part No.	Carton Qty.
1/2	1/4-20	110 347	10
11/16	1/4-20	111 595	10
1-1/8	1/4-20	128 274	5

GASKET

ANNULAR, TYPE A

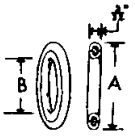

Plate 18-23

Dim. "A"	Dim. "B"	Part No.	Carton Qty.
1 1/8	.890	105 456	50

NIPPLE - PIPE

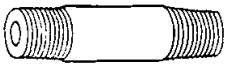

Plate 18-25

Diameter & Length	Part No.	Carton Qty.
1/4 x 1-1/2	144 596	5

FITTING - LUBRICATING

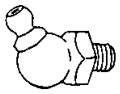

Plate 18-16

Thread & Length		Part No.	Carton Qty.
1/8 x 1-3/16	67-1/2°	109 365	5
1/8 x 1-13/16	90°	109 357	5

FITTING - LUBRICATING

Straight Drive Base

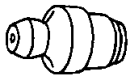

Plate 18-18

Diameter & Length	Part No.	Carton Qty.
.311 x 5/8	119 516	10

FITTING - LUBRICATING

Straight Type and Threaded Drive Type

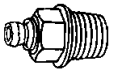

Plate 18-20

Diameter & Length	Part No.	Carton Qty.
1/8 x 23/32	9411 022	10

FITTING - LUBRICATING

Threaded Drive Type

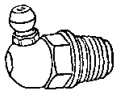

Plate 18-22

Length		Part No.	Carton Qty.
1	30°	145 434	10
47/64	85°	9411 025	10
25/32	67-1/2°	9411 024	10

GASKET

ANNULAR, TYPE C

Plate 18-24

Dim. "A"	Dim. "B"	Part No.	Carton Qty.
25/32	.561	150 189	100

NUT

Flared Tube

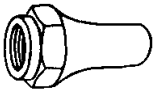

Plate 18-26

Tube Dia.	Thread	Part No.	Carton Qty.
5/16	1/2-20	118 538	5

▲ - Indicates bright finish.

MyMopar.com

NUT - HEXAGON

Plate 18-27

Diameter & Thread	Part No.	Carton Qty.
3/4-16	219 758	10

NUT - HEXAGON
Lock, Thin, Semi - Finished

Plate 18-29

Diameter & Thread	Part No.	Carton Qty.
5/8-18	145 013	10

NUT - HEXAGON
Ball Sleeve Tubing

Plate 18-31

Tube Dia.	Thread	Part No.	Carton Qty.
5/16	1/2-24	114 630	10
3/4	1-28	144 409	5

NUT - HEXAGON
Slotted, Standard Semi - Finished

Plate 18-33

Diameter & Thread	Part No.	Carton Qty.
3/8-24	125 233	50
7/16-20	128 014	50
9/16-18	128 178	25
5/8-18	128 027	25

NUT - HEXAGON
Standard, Semi-Finished National Fine Thread

Plate 18-35

Diameter & Thread	Part No.	Carton Qty.
1/4-28	120 367	50
5/16-24	120 368	50
3/8-24	114 547	25
3/8-24	120 369	50
7/16-20	271 506	50
1/2-20	120 371	50
9/16-18	124 634	25

NUT - HEXAGON

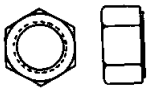

Plate 18-28

Diameter & Thread	Part No.	Carton Qty.
3/4-16	426 099	10

NUT - HEXAGON
Lock, Standard, Semi - Finished

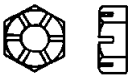

Plate 18-30

Diameter & Thread	Part No.	Carton Qty.
7/16-14	126 012	50

NUT - HEXAGON
Common

Plate 18-32

Thread & Length	Part No.	Carton Qty.
No. 8-32	120 622	100
No. 10-24	116 000	100
No. 12-24	121 743	100

NUT - HEXAGON
Standard, Semi-Finished National Coarse Thread

Plate 18-34

Diameter & Thread	Part No.	Carton Qty.
1/4-20	120 375	50
5/16-18	120 376	50
3/8-16	120 377	50
7/16-14	271 501	50
1/2-13	120 378	50
9/16-12	124 583	25
5/8-11	124 589	25

NUT
Inverted Flared Tube

Plate 18-36

Tube Dia.	Thread	Part No.	Carton Qty.
3/16	3/8-24	137 396	50
1/4	7/16-24	137 397	50
5/16	1/2-20	137 398	25
3/8	5/8-18	137 399	25

MyMopar.com
▲ - Indicates bright finish.

NUT - HEXAGON
Tri-Slot, Semi-Finished

Plate 18-37

Diameter & Thread	Part No.	Carton Qty.
3/4-16	128 180	5

PIN - DOWEL

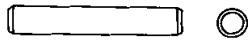

Plate 18-39

Diameter	Length	Part No.	Carton Qty.
1/4	2-1/4	141 210	10
5/16	2-1/4	141 232	10

PIN
Straight, Grooved

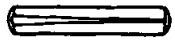

Plate 18-40

Diameter	Length	Part No.	Carton Qty.
1/4	1	142 520	10

PIN - COTTER
Split

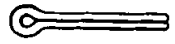

Plate 18-38

Length	Diameter	Part No.	Carton Qty.
3/4	3/32	103 373	100
1-1/8	3/32	108 636	100
1-5/8	1/8	119 209	100

PLUG - BUTTON

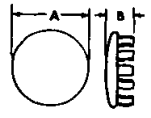

Plate 18-41

Dim. "A"	Dim. "B"	Part No.	Carton Qty.
1	19/64	142 093	10

PLUG - EXPANSION

Plate 18-42

Diameter	Part No.	Carton Qty.
5/8	103 891	25
3/4	103 892	25
13/16	105 602	25
7/8	103 893	25
15/16	117 919	25
1-1/16	117 920	10
1-3/16	140 690	10
1-3/16	117 921	10
1-1/4	179 380	10
1-3/8	117 923	10
1-1/2	103 896	10
1-5/8	117 924	10
1-5/8	140 802	10
1-3/4	103 897	10
1-7/8	114 564	10
2	140 089	10

PLUG - PIPE
Countersunk Headless

Plate 18-43

Diameter & Thread	Part No.	Carton Qty.
3/8-18	143 162	10

PLUG - PIPE
Square Head, Hollow

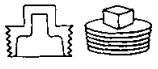

Plate 18-46

Diameter & Thread	Part No.	Carton Qty.
3/8-18	112 304	5
3/4-14	103 869	5

▲ - Indicates bright finish.
MyMopar.com

PLUG - PIPE
Slotted Headless

Plate 18-45

Diameter & Thread	Part No.	Carton Qty.
1/8-27	118 831	10

RIVET
Solid, Round Head

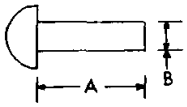

Plate 18-50

Dim. "A"	Dim. "B"	Part No.	Carton Qty.
5/8	3/16	108 682	100

RIVET - TUBULAR
Oval Head, Drilled

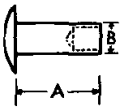

Plate 18-52

Dim. "A"	Dim. "B"	Part No.	Carton Qty.
9/64	1/4	118 140	100
3/16	3/32	131 284	100

SCREW - FILLISTER HEAD
Cross Recess, National Coarse Thread

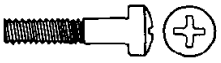

Plate 18-54

Diameter & Thread	Length	Part No.	Carton Qty.
No. 10-24	7/16	153 241	100

SCREW
Fillister Head, Slotted

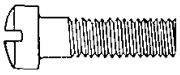

Plate 18-56

Diameter & Thread	Length	Part No.	Carton Qty.
1/4-20	2-1/2	132 300	100

PLUG - PIPE
Square Head, Solid

Plate 18-47

Diameter & Thread	Part No.	Carton Qty.
1/8-27	143 932	25
1/4-18	143 933	25

RIVET - TUBULAR
Flat Head, Countersunk

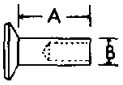

Plate 18-49

Dim. "A"	Dim. "B"	Part No.	Carton Qty.
9/32	9/64	121 573	100
13/32	3/16	114 518	100

RIVET
Split, Oval Head

Plate 18-51

Diameter	Length	Part No.	Carton Qty.
9/64	7/16	113 194	100

SCREW - TAPPING
Cross Recess, National Coarse Thread

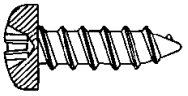

Plate 18-53

Diameter & Thread	Length	Part No.	Carton Qty.
No. 14-10	3/4	162 077	100

SCREW - FILLISTER HEAD
Cross Recess, National Fine Thread

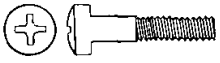

Plate 18-55

Diameter & Thread	Length	Part No.	Carton Qty.
No. 10-32	1-1/2	153 479	50

MyMopar.com
▲ - Indicates bright finish.

SCREW - FLAT HEAD

Cross Recess, National Coarse Thread

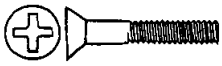

Plate 18-57

Length	Diameter & Thread									
	No. 6-32		No. 8-32		No. 10-24		No. 12-24		1/4-20	
	Part No.	Carton Qty.	Part No.	Carton Qty.	Part No.	Carton Qty.	Part No.	Carton Qty.	Part No.	Carton Qty.
3/16			155 868	100						
1/4	155 830	100								
1/2							156 094	100		
5/8									156 250	100
1					155 954	100				

SCREW - FLAT HEAD

Cross Recess, National Fine Thread

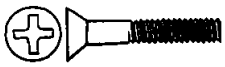

Plate 18-58

Length	Diameter & Thread			
	No. 10-32		5/16-24	
	Part No.	Carton Qty.	Part No.	Carton Qty.
1/2	156 009	100		
1	156 033	100	178 837	50

SCREW - OVAL HEAD

Cross Recess, National Coarse Thread

Plate 18-59

Length	Diameter & Thread									
	No. 8-32		No. 10-24		No. 12-24		1/4-20		5/16-18	
	Part No.	Carton Qty.	Part No.	Carton Qty.	Part No.	Carton Qty.	Part No.	Carton Qty.	Part No.	Carton Qty.
7/16			148 034	100						
1/2	156 771	50	156 963	100	157 277	100	157 391	100		
5/8	147 762	50	148 109	100						
3/4	186 575	100					443 869	100		
1										
1-1/2	156 831	50								

SCREW - ROUND HEAD

Cross Recess, National Coarse Thread

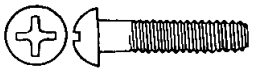

Plate 18-61

Length	Diameter & Thread											
	No. 4-40		No. 6-32		No. 8-32		No. 10-24		No. 12-24		1/4-20	
	Part No.	Carton Qty.	Part No.	Carton Qty.	Part No.	Carton Qty.	Part No.	Carton Qty.	Part No.	Carton Qty.	Part No.	Carton Qty.
1/4	154 921	100	154 959	100								
5/16					155 028	100						
1/2			154 987	100	9415 921	100	456 867	100				
3/4									155 278	100	155 348	100
1					188 764	25						

MyMopar.com

SCREW - ROUND HEAD
Cross Recess, National Fine Thread

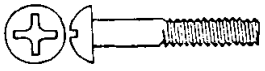

Plate 18-62

Diameter & Thread	Length	Part No.	Carton Qty.
No. 10-32	5/16	9416 993	100
No. 10-32	1/2	155 194	100

STUD

Plate 18-64

Stud End Dia. & Thread	Nut End Dia. & Thread	Length	Part No.	Ctn. Qty.
3/8-16	3/8-24	3-5/16	103 203	5
3/8-16	3/8-24	5-13/16	111 647	5

WASHER - LOCK

Plate 18-66

Bolt Size	Part No.	Carton Qty.
1/4	120 380	100
5/16	120 214	100
3/8	120 382	100
1/2	120 384	100
9/16	120 898	50
5/8	121 574	50

WASHER - LOCK
External Teeth

Plate 18-68

Bolt Size	Part No.	Carton Qty.
1/4	121 753	100
5/16	138 485	100
3/8	138 489	100
7/16	136 857	50
1/2	135 629	100
9/16	138 498	50
5/8	138 502	50

SLEEVE
Ball Sleeve Tubing

Plate 18-63

Diameter	Part No.	Carton Qty.
3/8	114 624	25
3/4	125 654	25

WASHER - LOCK
Countersunk, External Tooth

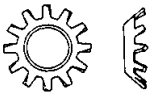

Plate 18-65

Bolt Size	I. D.	Part No.	Carton Qty.
3/8	.398	138 617	100

WASHER - LOCK
External and Internal Teeth

Plate 18-67

Bolt Size	Part No.	Carton Qty.
1/4	174 916	50
5/16	178 532	50
7/16	178 571	50
9/16	178 612	25

WASHER - PLAIN
Small

Plate 18-70

Bolt Size	Part No.	Carton Qty.
1/4	120 392	100
5/16	120 387	100
3/8	120 394	100
7/16	120 395	100
1/2	120 396	50
9/16	121 458	50
5/8	131 016	50

WASHER - PLAIN
Large

Plate 18-69

Bolt Size	Part No.	Carton Qty.
1/4	147 697	100
5/16	120 387	100
3/8	128 051	50
1/2	126 335	50

MyMopar.com
▲ - Indicates bright finish.

GROUP 19 - STEERING

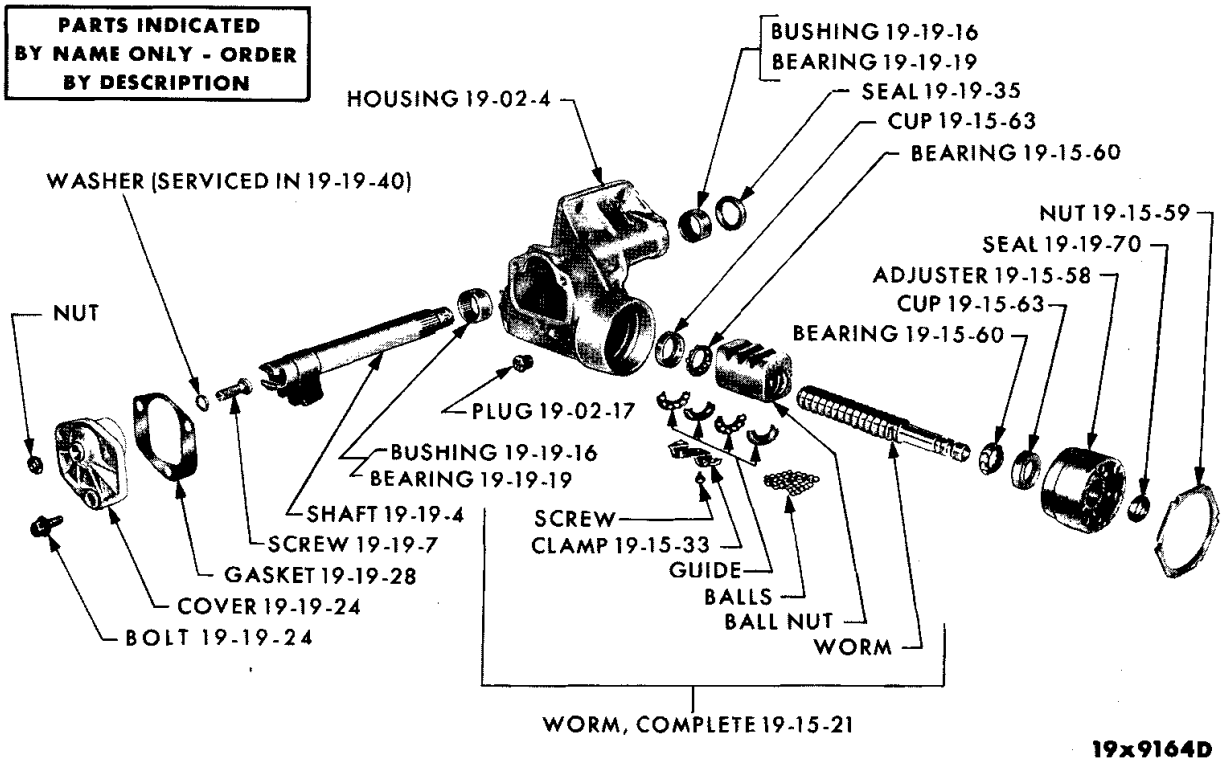

MANUAL STEERING GEAR - VALIANT, DART, BELVEDERE AND CORONET

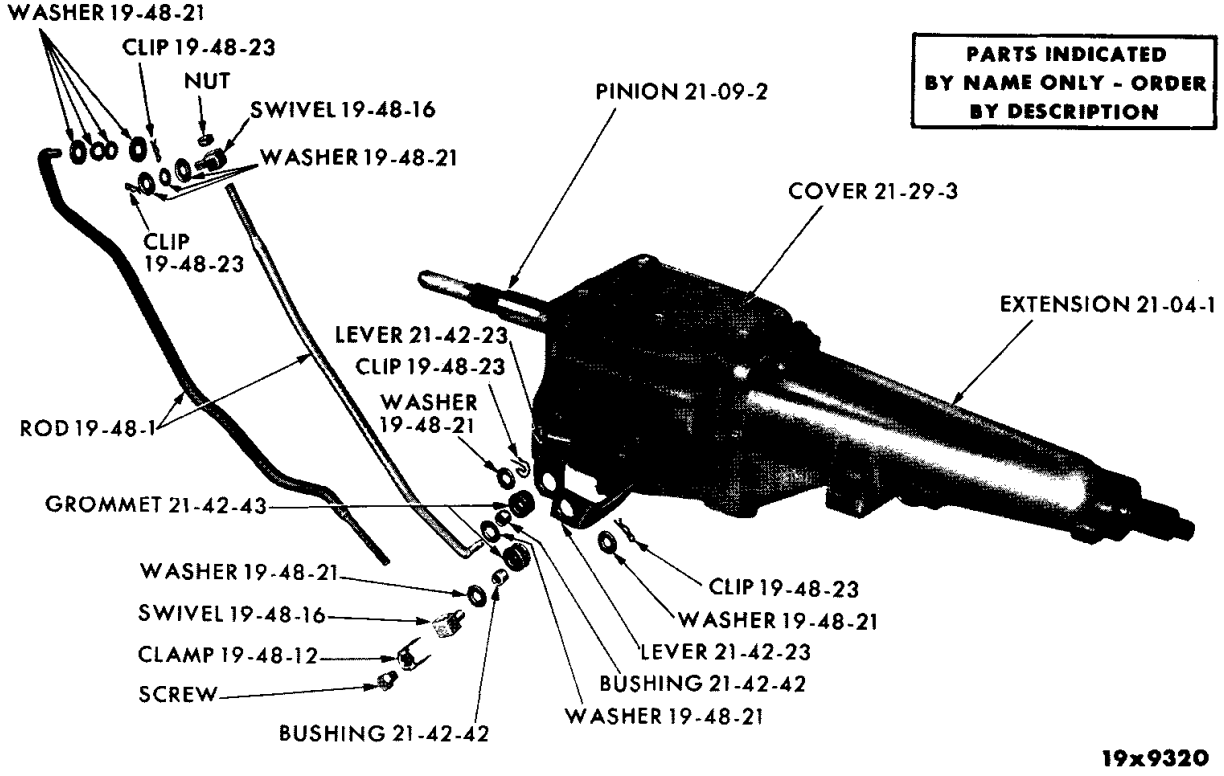

GEARSHIFT CONTROLS (MANUAL TRANSMISSION) - VALIANT AND DART

MyMopar.com

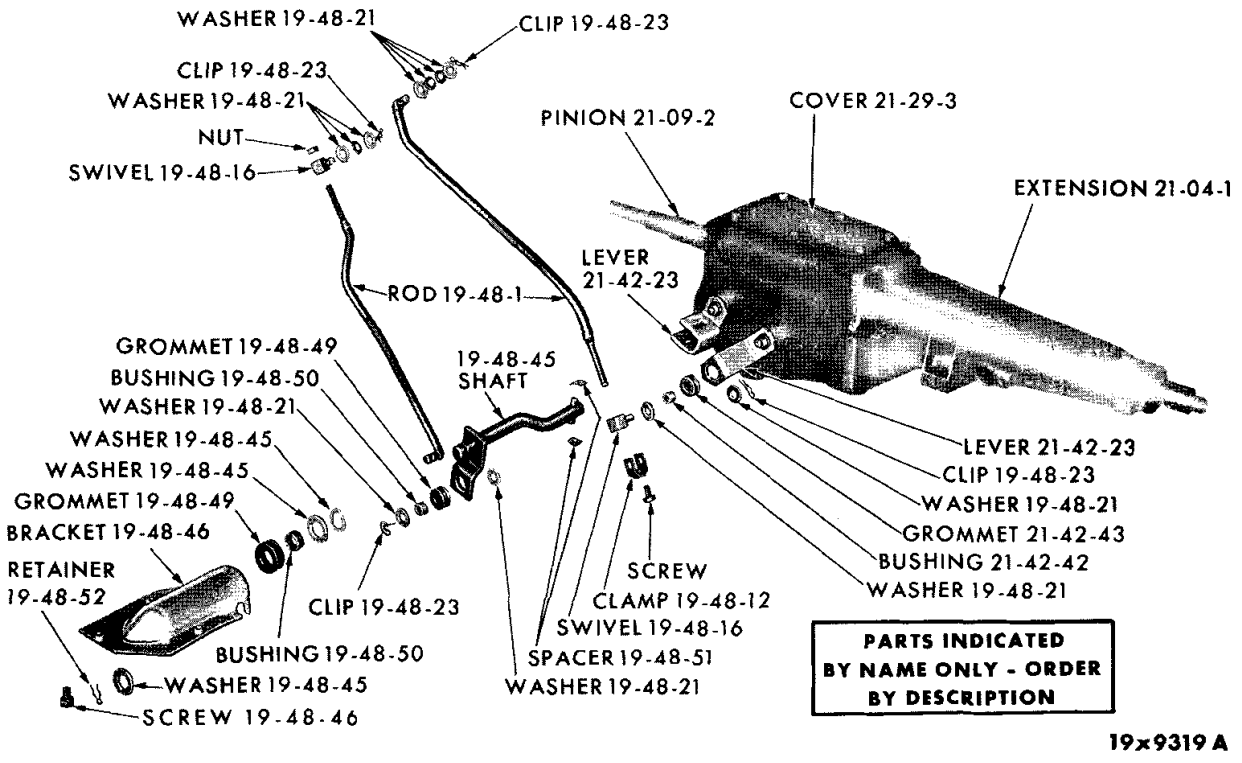

GEARSHIFT CONTROLS (3 SPEED MANUAL TRANSMISSION) - BELVEDERE, PLYMOUTH, CORONET, DODGE AND CHRYSLER C1-2

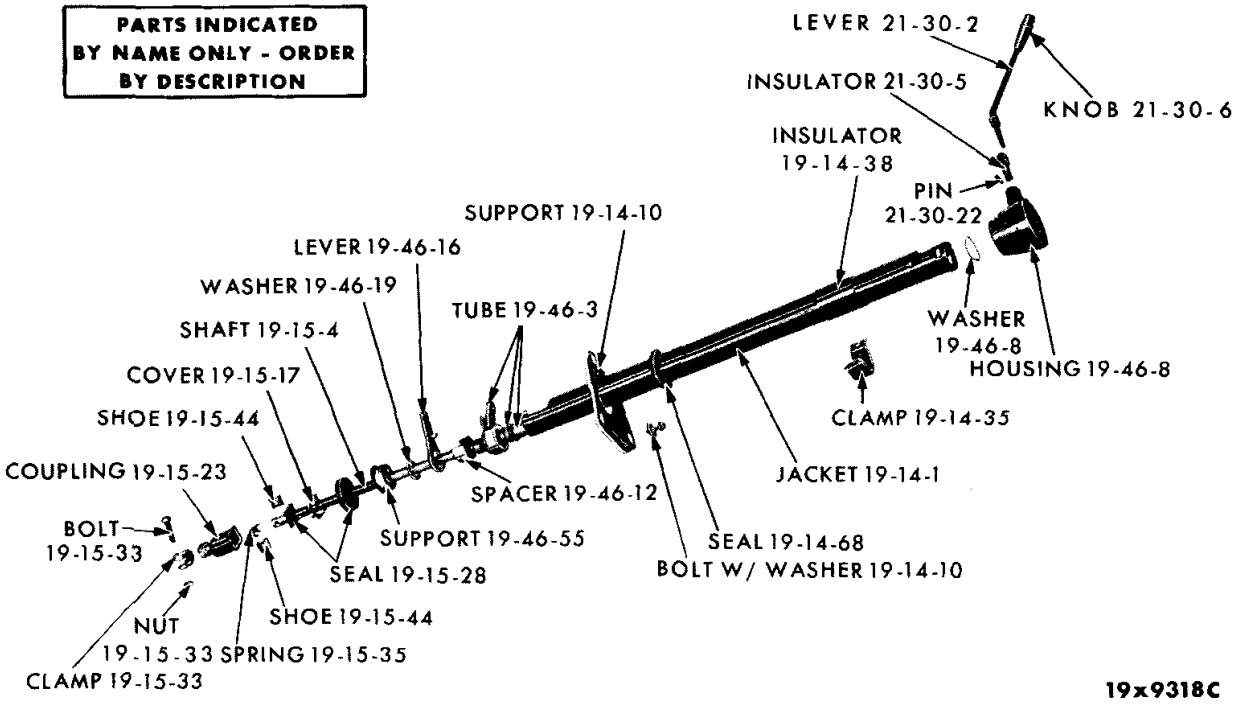

STEERING COLUMN 3 SPEED MANUAL TRANSMISSION SHIFT LINKAGE - VALIANT, DART, BELVEDERE, PLYMOUTH, CORONET AND DODGE

MyMopar.com

STANDARD STEERING

CODE	PART NAME AND DESCRIPTION	CYL	PER CAR	VALIANT / DART	PLYMOUTH BELVEDERE / DODGE CORONET	PLYMOUTH FURY / DODGE POLARA / CHRYSLER	IMPERIAL
19-01-0	**STEERING GEAR ASSEMBLY**						
19-01-3	REPAIR PACKAGE	6	1	2279 955			
	16 to 1 Ratio		1	2279 954			
			1	---- ---	2279 954		
			1	---- ---	---- ---	2525 481	
19-01-8	CHUCK, Steering Gear, 24 to 1 Ratio		1	2267 566	2267 566		
	16 to 1 Ratio		1	2267 707			
			1	---- ---	---- ---	2267 550	
	BOLT, w/WASHER		3	6025 063	6025 063		
19-01-19	CLAMP, Steering Column Shaft Coupling		1	2265 613	2265 613	2265 613	
19-02-0	**STEERING GEAR HOUSING**						
19-02-4	HOUSING		1	2127 099	2127 099		
			1	---- ---	---- ---	⊟2267 551	
	SCREW, w/WASHER		★	⊟6025 677	⊟6025 677	⊟6025 237	
19-02-17	PLUG, Oil Filler		1	1673 974	1673 974	1673 974	
19-14-0	**STEERING COLUMN JACKET**						
19-14-1	JACKET, w/Manual and Auto. Trans. Floor Shift		1	2265 621			
	w/Manual Trans. w/Column Shift		1	2405 612			
	w/Auto. Trans.		1	2467 859			
	w/Auto. Trans. Column Shift, R-L, R-H, W-L, W-H		1	---- ---	2467 818		
	w/Auto. Trans. Floor Shift, R2-P, W2-P	8	1	---- ---	2265 621		
	w/Manual Trans. Column Shift		1	---- ---	2265 670		
	w/Manual Trans. Floor Shift	8	1	---- ---	2265 621		
	w/Auto. Trans. Column Shift		1	---- ---	---- ---	2530 181	
	w/Manual Trans. Column Shift		1	---- ---	---- ---	2265 670	
	w/Manual and Auto. Trans. Floor Shift		1	---- ---	---- ---	2530 197	
19-14-4	BEARING, Steering Column Shaft		1	2265 656	2265 656	2265 656	
	Lower		1	---- ---	---- ---	2530 570	
	SNAP RING, Upper		1	6024 333	6024 333	6024 333	
	SNAP RING, Lower		1	6023 045	6023 045	6023 045	
19-14-10	SUPPORT, Column Jacket, Upper		1	2530 507	2530 500	2530 524	
	Lower		1	2530 514	2530 503		
	Lower, w/Auto. Trans. Column and Floor Shift		1	---- ---	---- ---	2530 517	
	Lower, w/Manual Trans. Column and Floor Shift		1	---- ---	---- ---	2530 518	
	SUPPORT, Instrument Panel Steering Column to Pedal Bracket		1	---- ---	2217 706		
	EXTENSION, Instrument Panel Steering Column to Pedal Bracket		1	---- ---	2491 867		
19-14-21	HOUSING, Steering Column Shaft Bearing, w/Auto. Trans. Column Shift		1	2467 852	2467 852		
	w/Manual Trans. Column and Floor Shift		1	2265 653	2265 653		
	w/Auto. Trans. Floor Shift		1	2265 653	2265 653		
	w/Manual Trans. Column Shift		1	---- ---	---- ---	2265 653	
	w/Manual Trans. Floor Shift, w/Auto. Trans. Column and Floor Shift		1	---- ---	---- ---	2530 233	
	BOLT		2	*6023 036	*6023 036	*6023 036	*6023 036

TYPE LETTERS Indicate: V - Valiant, L - Dart, R - Belvedere, W - Coronet, P - Plymouth, D - Dodge, C - Chrysler, Y - Imperial

★Indicates use as required. Numerals in parentheses ( ) refer to notes. Printed in U.S.A.

⊟Indicates parts not listed in any previous parts book. Prices and specifications subject to change without notice.

* Indicates change or addition. May 1965, Supersedes Sept. 4, 1964.

MyMopar.com

STANDARD STEERING

19-14-0 STEERING COLUMN JACKET - Cont'd

CODE	PART NAME AND DESCRIPTION	CYL	PER CAR	VALIANT / DART	PLYMOUTH BELVEDERE / DODGE CORONET	PLYMOUTH FURY / DODGE POLARA / CHRYSLER	IMPERIAL
19-14-23	PLATE, Steering Column Shaft Bearing Retainer		1	2265 654	2265 654	2265 654	2265 654
	PLATE, Steering Column Jacket Support, Lower		1	---- ---	2530 504		
	SCREW, w/WASHER, Bearing Retainer Plate		2	---- ---	---- ---	⊟6024 836	
	SCREW, w/WASHER, Bearing Retainer Plate		2	---- ---	---- ---	⊟6024 837	
19-14-24	COVER, Steering Column Shaft Bearing Housing, w/Auto. and Manual Trans. Floor Shift		1	2265 622	2265 622		
	w/Manual and Auto. Trans. Floor Shift, P, D		1	---- ---	---- ---	2530 229	
	w/Manual and Auto. Trans. Floor Shift, C1, C2	8	1	---- ---	---- ---	2530 235	
19-14-35	CLAMP, Steering Column		1	2631 331			
	CLAMP, Instrument Panel Steering Column, Upper		1	---- ---	2571 409		
	Lower		1	---- ---	2631 333		
	CLAMP, Instrument Panel Steering Column, P, D2		1	---- ---	---- ---	2570 972	
	C1, C2	8	1	---- ---	---- ---	2492 693	
19-14-38	INSULATOR, Steering Column Jacket		1	2162 480	2162 480	2162 480	
	INSULATOR, Steering Column Shaft Bearing		1	2265 658	2265 658	2265 658	
	Lower		1	---- ---	---- ---	2530 566	
19-14-40	SEAL, Steering Column Jacket Support Plate, Lower		1	2530 513	2530 506	2530 523	
19-14-68	SEAL, Steering Column Jacket		1	2265 697	2265 697	2530 529	
	Inner		1	2533 998	2533 998	2533 998	
19-14-69	SPACER, Seal		1	2461 049	2461 049	2461 049	

19-15-0 STEERING COLUMN SHAFT AND COUPLING

19-15-4	SHAFT, w/Wide Flute of Serrations Horizontal to Pin at End of Shaft		1	*2530 561	*2530 563		
	w/Wide Flute of Serrations Vertical to Pin at End of Shaft		1	⊟2768 217	*2768 219		
	SHAFT, w/FLANGE, w/Police Cars		1	---- ---	2643 627		
	SHAFT, Upper		1	---- ---	---- ---	2530 554	
	SHAFT, Lower, w/Flange Mounted Vertical to Pin at End of Shaft		1	---- ---	---- ---	*2530 534	
	w/Flange Mounted 40° From Vertical to Pin at End of Shaft		1	---- ---	---- ---	*2768 204	
19-15-17	COVER, Steering Column Coupling		1	2530 538	2530 538	2530 538	
19-15-20	HORN GROUND, Steering Column Shaft Coupling, w/TERMINALS		1	---- ---	---- ---	*2497 251	
	w/Police Cars		1	---- ---	*2497 251		
	SPRING, Steering Column Coupling Ground		1	---- ---	---- ---	*2768 287	
	w/Police Cars		1	---- ---	*2768 287		

TYPE LETTERS Indicate: V - Valiant, L - Dart, R - Belvedere, W - Coronet, P - Plymouth, D - Dodge, C - Chrysler, Y - Imperial

★Indicates use as required. Numerals in parentheses ( ) refer to notes. Printed in U.S.A.

⊟Indicates parts not listed in any previous parts book. Prices and specifications subject to change without notice.

March 1966 Supersedes May 1965. * Indicates change or addition.

MyMopar.com

STANDARD STEERING

19-15-0 STEERING COLUMN SHAFT AND COUPLING - Cont'd

CODE	PART NAME AND DESCRIPTION	CYL	PER CAR	VALIANT / DART	PLYMOUTH BELVEDERE / DODGE CORONET	PLYMOUTH FURY / DODGE POLARA / CHRYSLER	IMPERIAL
19-15-21	WORM, w/Ball NUT, Steering Gear, 24 to 1 Ratio		1	2267 454			
	16 to 1 Ratio		1	2267 640			
			1	---- ---	2267 454	2267 454	
19-15-23	BODY, Steering Column Coupling, Screw Type		1	*2585 334	*2585 334	*2585 334	
	BODY PACKAGE, Steering Column Coupling, Pin Type		1	2585 334	2585 334	2585 334	
	COUPLING, Steering Column Shaft		1	---- ---	---- ---	2530 541	
	w/Police Cars		1	---- ---	2530 541		
	PIN		1	9422 159	9422 159	9422 159	
	BOLT		1	6025 257	6025 257	6025 257	
	BOLT, R, W, w/Police Cars		★	---- ---	⊟6026 435	⊟6026 435	
	BOLT, R, W, w/Police Cars		2	---- ---	9422 009	9422 009	
19-15-28	SEAL, Steering Column Coupling Cover		1	2530 848	2530 848	2461 996	
	SEAL, Steering Column Shaft		1	2266 738	2266 738		
19-15-35	SPRING, Steering Column Coupling		2	2530 540	2530 540	2530 540	
19-15-43	FLANGE, Steering Column Shaft Coupling, w/Police Cars		1	---- ---	*2530 189		
	w/Wide Flute of Serrations Vertical to Pin Mounting		1	---- ---	---- ---	*2530 189	
	w/Wide Flute of Serrations 50 Degrees From Vertical to Pin Mounting		1	---- ---	---- ---	⊟2768 206	
	Pin		★	---- ---	*9422 159	*9422 159	
19-15-44	SHOE, Steering Column Coupling		2	2530 539	2530 539	2530 539	
19-15-58	ADJUSTER, Steering Gear Worm Thrust Bearing		1	2127 146	2127 146	2267 492	
19-15-59	NUT, Steering Gear Worm Adjuster Lock		1	2267 192	2267 192	2267 192	
19-15-60	BEARING, Steering Gear Worm Thrust		2	2072 060	2072 060	2072 060	
19-15-63	CUP, Steering Gear Worm Thrust Bearing		2	2127 097	2127 097	2127 097	
19-15-74	PLATE, Steering Column Shaft Bearing Housing, w/Auto. and Manual Trans. Floor Shift		1	---- ---	---- ---	2530 238	
19-15-77	SPACER, Steering Gear Worm Thrust Bearing		1	---- ---	---- ---	2267 478	
19-15-111	SHIELD, Steering Column Coupling, Screw Mounting		1	---- ---	---- ---	*2768 255	
	CLAMP, Clamp Mounting Shield		1	---- ---	---- ---	870 469	

19-19-0 STEERING GEAR SHAFT

19-19-4	SHAFT		1	2127 104	2127 104	2267 487	
19-19-7	SCREW, Adjusting		1	2267 178	2267 178	2267 178	
19-19-16	BUSHING	6	2	2267 128			
19-19-19	BEARING	8	3	2126 890			
			3	---- ---	2126 890		
			2	---- ---	---- ---	2126 760	
			1	---- ---	---- ---	2126 890	

TYPE LETTERS Indicate: V - Valiant, L - Dart, R - Belvedere, W - Coronet, P - Plymouth, D - Dodge, C - Chrysler, Y - Imperial

★Indicates use as required. Numerals in parentheses ( ) refer to notes. Printed in U.S.A.

⊟Indicates parts not listed in any previous parts book. Prices and specifications subject to change without notice.

* Indicates change or addition.

MyMopar.com

March 1966 Supersedes May 1965.

STANDARD STEERING

CODE	PART NAME AND DESCRIPTION	CYL	PER CAR	VALIANT / DART	PLYMOUTH BELVEDERE / DODGE CORONET	PLYMOUTH FURY / DODGE POLARA / CHRYSLER	IMPERIAL
19-19-0	**STEERING GEAR SHAFT - Cont'd**						
19-19-24	COVER		1	2267 152	2267 152	2267 467	
	BOLT, w/WASHER		★	6025 063	6025 063	6025 063	
	BOLT, w/WASHER, P1, P2, D2		1	---- ---	---- ---	6024 487	
19-19-28	GASKET, Cover		1	2127 108	2127 108	2267 468	
19-19-35	OIL SEAL		1	2127 154	2127 154	1730 985	
19-19-40	WASHER PACKAGE, Adjusting Screw		1	2279 961	2279 961	2279 961	
19-19-70	SEAL, Steering Gear Worm Shaft		1	2267 156	2267 156	2267 156	
19-27-0	**STEERING LINK GEAR ARM AND IDLER ARM**						
19-27-2	ARM, Link Gear		1	2072 573	1858 017	2269 398	
19-27-8	NUT, Steering Link Gear Arm End Cross Shaft		1	2207 359	2207 359	2207 359	
19-27-31	ARM, Steering Link Idler		1	2072 577	1858 067	2269 679	
	BOLT		1	---- ---	---- ---	*6023 630	
19-27-33	BRACKET, Front Suspension Crossmember Steering Linkage Idler Arm		1	2401 053	2401 051		
19-27-40	SEAL, Steering Link Idler Arm Bracket Stud		1	1857 748	1670 299		
	SEAL, Steering Link Idler Arm End		1	1857 748	1670 299		
19-27-50	LINK, Steering Link Center		1	*2269 359			
			1	---- ---	1858 015	2269 393	
19-27-51	PLUG, Steering Link Gear Arm End Cover		1	1858 115	1858 115		
	Steering Link Gear Arm Stud		1	---- ---	---- ---	1858 115	
19-30-0	**STEERING WHEEL**						
19-30-4	WHEEL, Red, w/Trim Codes H1R, H4R, L1R, L4R, P4R, w/Model V		1	4006 TR6			
	White, w/Trim Codes All		1	4006 TW4			
	Red, w/Trim Codes H1R, H4R, H5R, H8R, L1R, L4R, L5R, P4R, w/Model L		1	4006 AR7			
	Yellow Tan, w/Three Spokes, w/Trim Codes All		1	4016 VTT			
	Blue, w/Trim Codes H1B, H4B, H5B, H8B, L1B, L4B, L5B, P4B, w/Model W		1	4006 VB6	*4006 VB6		
	Turquoise, w/Trim Codes H1Q, H4Q, L1Q, L4Q, w/Model W		1	4006 VQ6	*4006 VQ6		
	Yellow Tan, w/Trim Codes H1T, H4T, H5T, H8T, L1T, L4T, L5T, P4T, w/Model W		1	4006 VT6	*4006 VT6		
	Black, w/Trim Code P4X		1	4006 VX9			
	Yellow Gold, w/Trim Code P4Y		1	4006 VY6			
	White, w/Two Spokes, w/Trim Codes All, w/Model R, W, D		1	---- ---	4004 AW4	4004 AW4	
	Black, w/Two Spokes, w/Trim Codes H4X, P4X, K1B, K1R, K1T, K2T, K8T, K4B, K4R, K4T, X1P, T8T, L9X, K2A, K8A, L2A, L8A, L4X, L3X, w/Models R, W, P, D		1	---- ---	4004 AX9	4004 AX9	

TYPE LETTERS Indicate: V - Valiant, L - Dart, R - Belvedere, W - Coronet, P - Plymouth, D - Dodge, C - Chrysler, Y - Imperial

★Indicates use as required. Numerals in parentheses ( ) refer to notes. Printed in U.S.A.

⊟Indicates parts not listed in any previous parts book. Prices and specifications subject to change without notice.

March 1966 Supersedes May 1965. * Indicates change or addition.

MyMopar.com

STANDARD STEERING

19-30-0 STEERING WHEEL - Cont'd

CODE	PART NAME AND DESCRIPTION	CYL	PER CAR	VALIANT / DART	PLYMOUTH BELVEDERE / DODGE CORONET	PLYMOUTH FURY / DODGE POLARA / CHRYSLER	IMPERIAL
19-30-4	WHEEL - Cont'd						
	Yellow Gold, w/Two Spokes, w/Trim Codes H1Y, H4Y, L1Y, L4Y, K1Y, P4Y, w/Models W, R, D		1	---- ---	4002 AY3	4002 AY3	
	Red, w/Two Spokes, w/Trim Codes H1R, H4R, L1R, L4R, L5R, P4R, K1R, K4R, w/Model R		1	---- ---	4004 AR6		
	Red, w/Two Spokes, w/Trim Codes H1R, H4R, H5R, K1R, K4R, L1R, L3R, L4R, L5R, L9R, P4R, w/Model W, D	8	1	---- ---	4002 AR7	4002 AR7	
	Yellow Tan, w/Two Spokes, w/Trim Codes, H1T, H4T, H5T, L1T, L2T, L3T, L4T, L5T, L8T, K1T, K2T, K4T, K8T, T8T, P4T, w/Model W, R, D		1	---- ---	4002 AT6	4002 AT6	
	Blue, w/Two Spokes, w/Trim Codes H1B, H4B, H5B, L1B, L3B, L4B, L5B, L9B, P4B, K1B, K4B, w/Models R, W, D		1	---- ---	4002 AB4	4002 AB4	
	Turquoise, w/Two Spokes, w/Trim Codes H1Q, H4Q, K1Q, K4Q, L1Q, L4Q, P4Q, w/Models W, R, D		1	---- ---	4002 AQ4	4002 AQ4	
	Black, w/Two Spokes, W/Trim Code H5X, w/Model P		1	---- ---	---- ---	4003 AX9	
	Yellow Gold, w/Two Spokes, w/Trim Codes H1Y, H2Y, H4Y, H5Y, w/Model P		1	---- ---	---- ---	4003 AY3	
	White, w/Two Spokes, w/Trim Codes All, w/Model P		1	---- ---	---- ---	4003 AW4	
	Red, w/Two Spokes, w/Trim Codes H1R, H2R, H4R, H5R, L1R, L4R, L5R, M1R, M4R, M5R, w/Model P		1	---- ---	---- ---	4003 AR7	
	Yellow Tan, w/Two Spokes, w/Trim Codes H1T, H2T, H4T, L1T, L2T, L4T, L5T, L8T, M1T, M4T, M5T, T8T, w/Model P		1	---- ---	---- ---	4003 AT6	
	Blue, w/Two Spokes, w/Trim Codes, H1B, H2B, H4B, H5B, L1B, L4B, L5B, M1B, M4B, M5B, w/Model P		1	---- ---	---- ---	4003 AB6	
	Turquoise, w/Two Spokes, w/Trim Codes H1Q, H2Q, H4Q, H5Q, M1Q, M4Q, w/Model P		1	---- ---	---- ---	4003 AQ6	
	Black, w/Three Spokes, w/o Spoke Cover, w/Trim Codes H4X, H5X, L2A, L8A, L3X, L4X, L9X, P4X, P4U, P4W, M3X, M4X, w/Models P, D, C1, C2		1	---- ---	---- ---	4000 AX9	
	Black, w/Three Spokes, w/Spoke Cover, w/Trim Codes L4X, L9X, M3X, M4X, P3X, P4X, w/Models C1, C2	8	1	---- ---	---- ---	4020 AX9	
	Blue, w/Three Spokes, w/o Spoke Cover, w/Trim Codes L1B, L2B, L3B, L4B, L5B, L9B, H1B, H2B, H4B, H5B, M1B, M4B, M5B, P1B, P4B, w/Models P, D, C1, C2		1	---- ---	---- ---	4001 AB4	
	Turquoise, w/Three Spokes, w/o Spoke Cover, w/Trim Codes H1Q, H2Q, H4Q, H5Q, L1Q, L2Q, L4Q, L8Q, M1Q, M4Q, P4Q, w/Models P, D, C1		1	---- ---	---- ---	4001 AQ4	
	Red Tan, w/Three Spokes, w/o Spoke Cover, w/Trim Code P4U, w/Model D	8	1	---- ---	---- ---	4001 AU9	

TYPE LETTERS Indicate: V - Valiant, L - Dart, R - Belvedere, W - Coronet, P - Plymouth, D - Dodge, C - Chrysler, Y - Imperial

★Indicates use as required. Numerals in parentheses ( ) refer to notes. Printed in U.S.A.

⊟Indicates parts not listed in any previous parts book. Prices and specifications subject to change without notice.

* Indicates change or addition. March 1966 Supersedes May 1965.

MyMopar.com

STANDARD STEERING

CODE	PART NAME AND DESCRIPTION	CYL	PER CAR	VALIANT / DART	PLYMOUTH BELVEDERE / DODGE CORONET	PLYMOUTH FURY / DODGE POLARA / CHRYSLER	IMPERIAL
19-30-0	**STEERING WHEEL - Cont'd**						
19-30-4	WHEEL - Cont'd						
	Yellow Gold, w/Three Spokes, w/o Spoke Cover, w/Trim Codes H1Y, H2Y, H4Y, H5Y, L1Y, L4Y, L2L, L4L, M4L, w/Models P, D, C1, C2		1	---- ---	---- ---	4001 AY3	
	Red, w/Three Spokes, w/o Spoke Cover, w/Trim Codes H1R, H2R, H4R, H5R, L1R, L2R, L4R, L5R, L8R, L9R, M1R, M3R, M4R, M5R, P4R, w/Models P, D, C1, C2		1	---- ---	---- ---	4001 AR7	
	Yellow Tan, w/Three Spokes, w/o Spoke Cover, w/Trim Codes H1T, H2T, H4T, H5T, L1T, L2T, L3T, L4T, L5T, L8T, M1T, M4T, M5T, w/Models P, D, C1, C2		1	---- ---	---- ---	4001 AT6	
	Yellow Tan, w/Three Spokes, w/o Spoke Cover, w/Trim Code P4T, w/Model D . . .	8	1	---- ---	---- ---	4001 AT5	
	Red, w/Spoke Cover, w/Trim Codes L1R, L2R, L4R, L5R, L8R, L9R, M3R, M4R, P3R, P4R, w/Models C1, C2	8	1	---- ---	---- ---	4008 AR7	
	Yellow Tan, w/Spoke Cover, w/Trim Codes L1T, L2T, L4T, L5T, L8T, M4T, P4T, w/Models C1, C2	8	1	---- ---	---- ---	4008 AT6	
	Blue, w/Spoke Cover, w/Trim Codes L1B, L2B, L4B, L5B, L8B, L9B, M4B, P4B, w/Models C1, C2	8	1	---- ---	---- ---	4008 AB4	
	Yellow Gold, w/Spoke Cover, w/Trim Codes L2L, L4L, M4L, P4L, w/Models C1, C2 . . .	8	1	---- ---	---- ---	4008 AY3	
	Turquoise, w/Spoke Cover, W/Trim Codes L1Q, L2Q, L8Q, w/Model C1	8	1	---- ---	---- ---	4008 AQ4	
	White, w/Spoke Cover, w/Trim Codes L1N, L2N, L4N, M1N, M4W, P4W, w/Models C1, C2	8	1	---- ---	---- ---	4020 AW3	
	White, w/o Spoke Cover, w/Trim Codes L1N, L2N, L4N, M1N, M4W, w/Models C1, C2 . . .	8	1	---- ---	---- ---	4000 AW3	
19-30-18	NUT, Steering Column Shaft, Steering Wheel . .		1	145 032	140 032	140 032	
	WASHER		1	6025 671	6025 671	6025 671	
19-30-43	COVER, Steering Wheel Spoke, P.		1	---- ---	---- ---	2530 956	
19-30-44	CUSHION, Steering Wheel Spoke Cover, P . . .		2	---- ---	---- ---	2768 111	
19-31-0	**STEERING COLUMN BRACKET OR SUPPORT**						
19-31-1	BRACKET, Instrument Panel Steering Column Support, C1, C2	8	1	---- ---	---- ---	2571 001	
19-31-2	SUPPORT, w/NUT, Instrument Panel Steering Column to Dash, P, D		1	---- ---	---- ---	2570 558	
19-31-7	BRACE, w/SCREW, Instrument Panel Steering Column Support to Windshield Lower Frame, Right		1	---- ---	2571 118		
	Left		1	---- ---	2570 185		
19-46-0	**STEERING COLUMN GEARSHIFT TUBE**						
19-46-3	TUBE, w/Manual Trans.		1	2405 614	2461 966	2461 966	
	w/Auto. Trans.		1	2467 860	2467 820	2530 182	

TYPE LETTERS Indicate: V - Valiant, L - Dart, R - Belvedere, W - Coronet, P - Plymouth, D - Dodge, C - Chrysler, Y - Imperial

★Indicates use as required. Numerals in parentheses ( ) refer to notes. Printed in U.S.A.

⊟Indicates parts not listed in any previous parts book. Prices and specifications subject to change without notice.

March 1966 Supersedes May 1965. * Indicates change or addition.

MyMopar.com

STANDARD STEERING

19-46-0 STEERING COLUMN GEARSHIFT TUBE - Cont'd

CODE	PART NAME AND DESCRIPTION	CYL	PER CAR	VALIANT / DART	PLYMOUTH BELVEDERE / DODGE CORONET	PLYMOUTH FURY / DODGE POLARA / CHRYSLER	IMPERIAL
19-46-8	HOUSING, Steering Column Gearshift, w/Manual Trans., P, D		1	2265 651	2265 651	2265 651	
	w/Auto. Trans., P, D		1	2530 240	2530 240	2467 855	
	w/Manual Trans., C1, C2-M	8	1	---- ---	---- ---	2530 227	
	w/Auto. Trans., C1, C2-M.	8	1	---- ---	---- ---	2467 823	
	SCREW		1	6026 251	6026 251	6026 251	
	WASHER		1	*6023 046	*6023 046	*6023 046	
19-46-12	SPACER, Steering Column Gearshift Tube Lever, w/Manual Trans.		1	2265 688	2265 688	2265 688	
	w/Auto. Trans.		1	2467 863	2467 863	2467 863	
19-46-13	GROMMET, Lever Pin, w/Auto. Trans.		1	2534 279	2534 279	2534 279	
19-46-15	RETAINER, Steering Column Gearshift Lever Spring, w/Auto. Trans.		1	2467 865	2467 865	2467 865	
19-46-16	LEVER, Steering Column Gearshift Tube, First and Reverse, w/Manual Trans.		1	2405 618	2460 570	2460 570	
	SCREW, w/WASHER.		2	⊟6024 836	⊟6024 836	⊟6024 836	
19-46-19	WASHER, Steering Column Gearshift Tube Lever, w/Manual Trans.		1	2265 687	2265 687		
19-46-22	PLATE, Steering Column Gearshift Tube Lever Seal, w/Auto. Trans.		1	*2530 548	*2530 548		
	w/Auto. Trans., w/o Three Holes .120" dia. Mounted on Sleeve		1	---- ---	---- ---	*2461 048	
	w/Auto. Trans., w/Three Holes .120" dia. Mounted on Sleeve		1	---- ---	---- ---	⊟2768 252	
19-46-26	SEAL, Steering Column Gearshift Tube, w/Lever, Upper, w/Auto. Trans.		1	2467 836	2467 836	2467 836	
	Lever Seal Plate, w/Auto. Trans.		1	---- ---	---- ---	2533 749	
19-46-33	SPRING, Steering Column Gearshift Tube, w/Auto. Trans. Column Shift		1	2467 864	2467 864	2467 864	
19-46-35	SPRING WASHER, Steering Column Gearshift Housing, w/Auto. Trans.		1	2461 043	2461 043	2461 043	
19-46-38	PAWL, Steering Column Gearshift Detent, w/Auto. Trans.		1	2467 830	2467 830	2467 830	
19-46-39	SPRING, Steering Column Gearshift Tube Pawl, w/Auto. Trans.		1	2467 834	2467 834	2467 834	
19-46-40	PLATE, Steering Column Gearshift Detent, w/Auto. Trans.		1	2467 835	2467 835	2467 835	
19-46-43	CLIP, Switch, w/Auto. Trans.		1	2530 191	2530 191	2530 191	
19-46-45	SLEEVE, Lever Pin, w/Auto. Trans.		1	2534 280	2534 280	2534 280	

TYPE LETTERS Indicate: V - Valiant, L - Dart, R - Belvedere, W - Coronet, P - Plymouth, D - Dodge, C - Chrysler, Y - Imperial

★Indicates use as required. Numerals in parentheses ( ) refer to notes. Printed in U.S.A.
⊟Indicates parts not listed in any previous parts book. Prices and specifications subject to change without notice.
* Indicates change or addition. March 1966 Supersedes May 1965.

MyMopar.com

STANDARD STEERING

19-46-0 STEERING COLUMN GEARSHIFT TUBE - Cont'd

CODE	PART NAME AND DESCRIPTION	CYL	PER CAR	VALIANT / DART	PLYMOUTH BELVEDERE / DODGE CORONET	PLYMOUTH FURY / DODGE POLARA / CHRYSLER	IMPERIAL
19-46-55	SUPPORT, Steering Gearshift Tube Lever, w/Manual Trans. Column Shift		1	2265 689	2265 689		
	SUPPORT, Steering Column Shaft Bearing Lower, Floor Shift		1	---- ---	---- ---	2530 582	
	w/Manual Trans. Column Shift, w/Three Holes Drilled Through Support		1	---- ---	---- ---	*2460 573	
	w/Manual Trans. Column Shift, w/Six Holes Drilled Through Support		1	---- ---	---- ---	⊟2768 254	

19-48-0 GEARSHIFT CONTROL ROD

CODE	PART NAME AND DESCRIPTION	CYL	PER CAR	VALIANT / DART	PLYMOUTH BELVEDERE / DODGE CORONET	PLYMOUTH FURY / DODGE POLARA / CHRYSLER	IMPERIAL
19-48-1	ROD, First and Reverse, w/Manual Trans. Column Shift	6	1	2405 570			
	Model L, L.H.D.,Export	6	1	2467 914			
		8	1	2467 914			
	w/A903 Trans.	6	1	---- ---	2409 420	2461 942	
	w/A745 Trans.		1	---- ---	2409 421	2461 943	
	Second and High, w/Manual Trans. Column Shift	6	1	2405 569			
	Model L, L.H.D., Export	6	1	2467 913			
		8	1	2467 913			
			1	---- ---	2409 419	2461 941	
	CLIP, Gearshift Control Rod Swivel, First and Reverse, w/Manual Trans.		1	---- ---	---- ---	*6025 071	
	CLIP, Gearshift Control Rod, Second and High		1	---- ---	---- ---	*6025 071	
19-48-2	END, Gearshift Control Rod, Second and High, w/Manual Trans. Column Shift		1	2461 938			
19-48-7	SMALL PARTS PACKAGE, Gearshift Control, w/Manual Trans. Column Shift		1	2421 772			
	w/Manual Trans. A903 and A745, w/Grommets in Trans. Levers		1	---- ---	2421 770	2421 770	
	w/Manual Trans. A745, w/o Grommets in Trans. Levers		1	---- ---	*2421 771	*2421 771	
19-48-12	CLAMP, Gearshift Control Rod, First and Reverse, w/Manual Trans. Column Shift		1	2204 274	2204 274		
	Gearshift Control Rod Swivel, Second and and High, w/Manual Trans. Column Shift		1	---- ---	---- ---	2204 274	
19-48-16	SWIVEL, Gearshift Control Rod, First and Reverse, w/Manual Trans. Column Shift		1	2208 155	2208 155	2074 521	
	Second and High, w/Manual Trans. Column Shift		1	---- ---	2074 521	2208 155	
	WASHER		2	631 217	631 217		
19-48-20	WASHER, Gearshift Control Rod Swivel		6	632 258	632 258	632 258	
19-48-21	WASHER, Gearshift Control Rod Swivel, First and Reverse, w/Manual Trans. A745, w/o Grommets in Trans. Levers		★	---- ---	*1533 190	*1533 190	

TYPE LETTERS Indicate: V - Valiant, L - Dart, R - Belvedere, W - Coronet, P - Plymouth, D - Dodge, C - Chrysler, Y - Imperial

★Indicates use as required. Numerals in parentheses ( ) refer to notes. Printed in U.S.A.

⊟Indicates parts not listed in any previous parts book. Prices and specifications subject to change without notice.

March 1966 Supersedes May 1965. * Indicates change or addition.

MyMopar.com

STANDARD STEERING

19-48-0 GEARSHIFT CONTROL ROD - Cont'd

CODE	PART NAME AND DESCRIPTION	CYL	PER CAR	VALIANT / DART	PLYMOUTH BELVEDERE / DODGE CORONET	PLYMOUTH FURY / DODGE POLARA / CHRYSLER	IMPERIAL
19-48-23	CLIP, Gearshift Control Rod Anti-Rattle, w/Manual Trans. Column Shift		★	2405 205	2405 205	2405 205	
	CLIP, Gearshift Control Rod Swivel, First and Reverse, w/Manual Trans.		1	1137 669	1137 669	*1137 669	
	Second and High, w/Manual Trans.		1	1137 669	1137 669	*1137 669	
	CLIP, Gearshift Control Rod, w/Four Speed Trans.		3	1137 669	1137 669	1137 669	
19-48-45	SHAFT, Gearshift Control Torque, w/Manual Trans. A903	6	1	---- ---	2409 422	2461 936	
	w/Manual Trans. A745		1	---- ---	2409 423	2461 934	
	WASHER, Plain, w/Manual Trans.		2	---- ---	*6023 085	*6023 085	
	WASHER, Spring, w/Manual Trans.		1	---- ---	*6023 086	*6023 086	
19-48-46	BRACKET, Gearshift Control Torque Shaft Frame, w/Manual Trans. Column Shift		1	---- ---	2208 156	2461 944	
19-48-48	PLATE, Gearshift Control Torque Shaft Bracket Mounting, w/Manual Trans. Column Shift		1	---- ---	---- ---	2467 946	
19-48-49	GROMMET, Gearshift Control Torque Shaft Frame Bracket, w/Manual Trans. Column Shift		1	---- ---	2208 158	2208 158	
	Gearshift Control Torque Shaft Lever, w/Manual Trans. Column Shift		1	---- ---	1941 699	1941 699	
19-48-50	BUSHING, Gearshift Control Torque Shaft Frame Bracket Grommet, w/Manual Trans. Column Shift		1	---- ---	2208 159	2208 159	
19-48-51	SPACER, Gearshift Control Torque Shaft, w/Manual Trans. Column Shift		2	---- ---	2208 172	2208 172	
19-48-52	RETAINER, Gearshift Control Torque Shaft, w/Manual Trans. Column Shift		1	---- ---	1671 569	1671 569	

TYPE LETTERS Indicate: V - Valiant, L - Dart, R - Belvedere, W - Coronet, P - Plymouth, D - Dodge, C - Chrysler, Y - Imperial

★Indicates use as required. Numerals in parentheses ( ) refer to notes. Printed in U.S.A.

⊟Indicates parts not listed in any previous parts book. Prices and specifications subject to change without notice.

• Indicates change or addition.

MyMopar.com

CODE	PART NAME AND DESCRIPTION	CYL	PER CAR	VALIANT / DART	PLYMOUTH BELVEDERE / DODGE CORONET	PLYMOUTH FURY / DODGE POLARA / CHRYSLER	IMPERIAL

NOTES

TYPE LETTERS Indicate: V - Valiant, L - Dart, R - Belvedere, W - Coronet, P - Plymouth, D - Dodge, C - Chrysler, Y - Imperial

★Indicates use as required. Numerals in parentheses ( ) refer to notes. Printed in U.S.A.

⊟Indicates parts not listed in any previous parts book. Prices and specifications subject to change without notice.

MyMopar.com

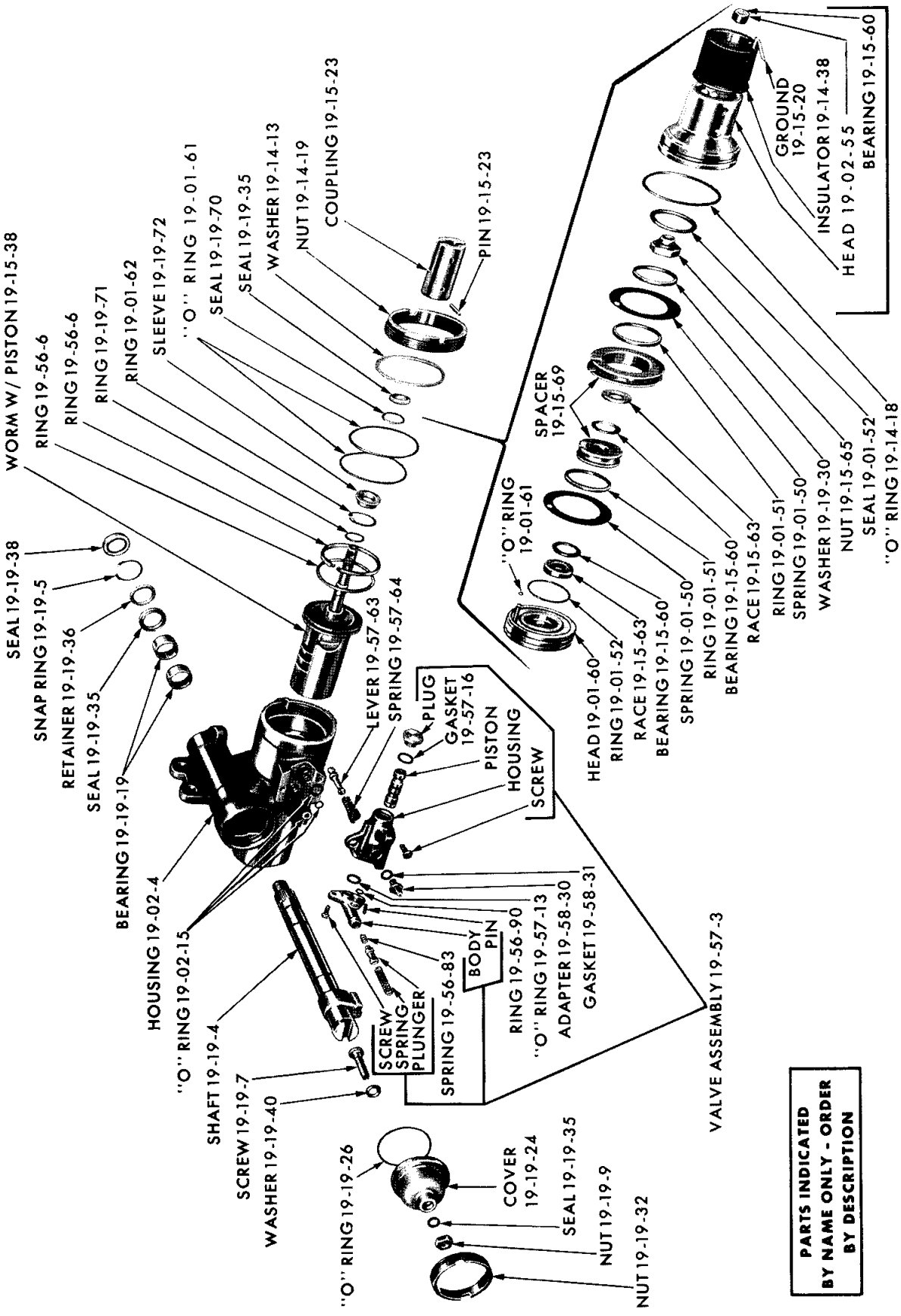

POWER STEERING GEAR ASSEMBLY

MyMopar.com

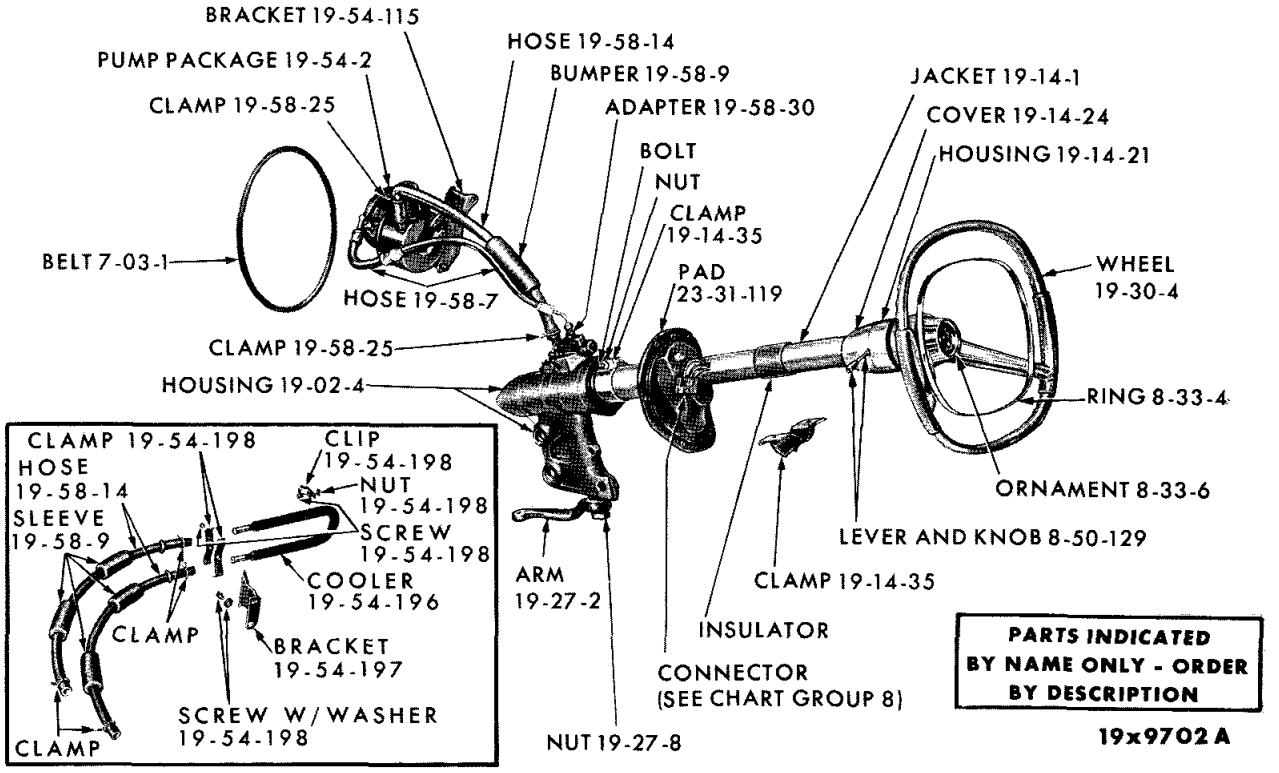

POWER STEERING GEAR (WITH OIL COOLER)

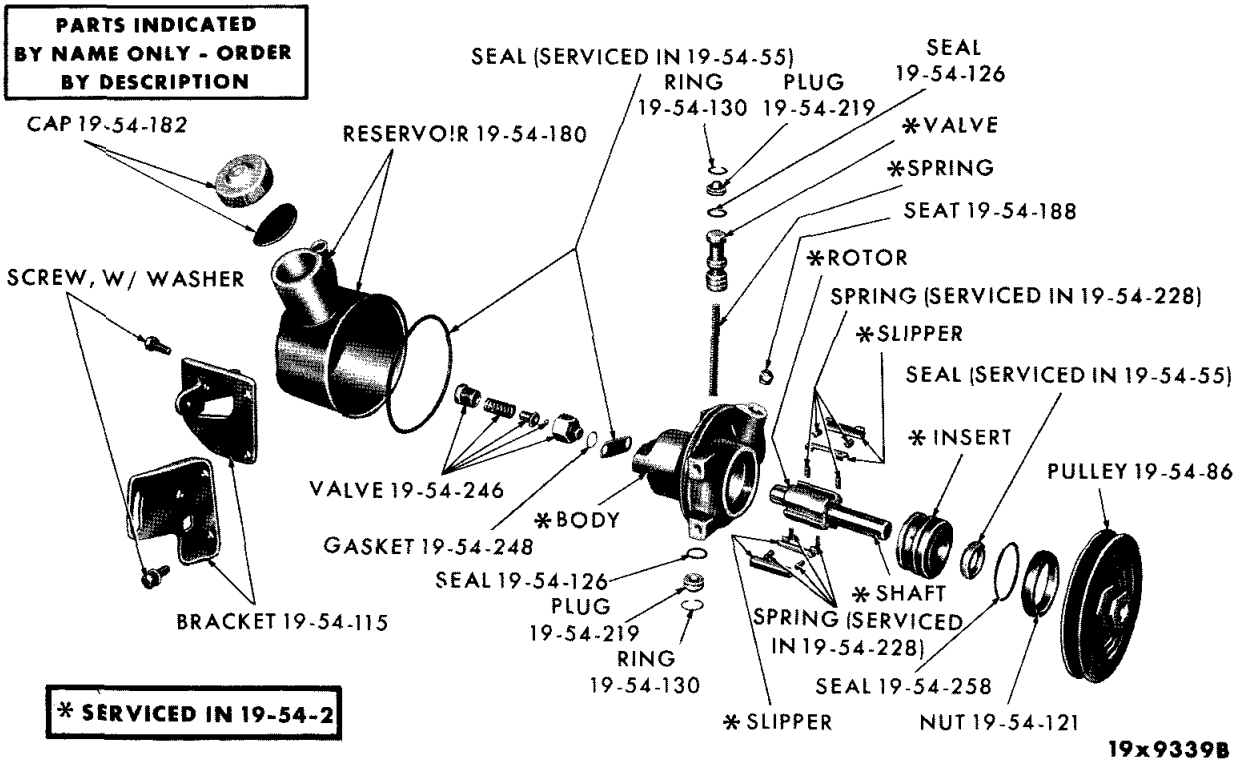

POWER STEERING PUMP

MyMopar.com

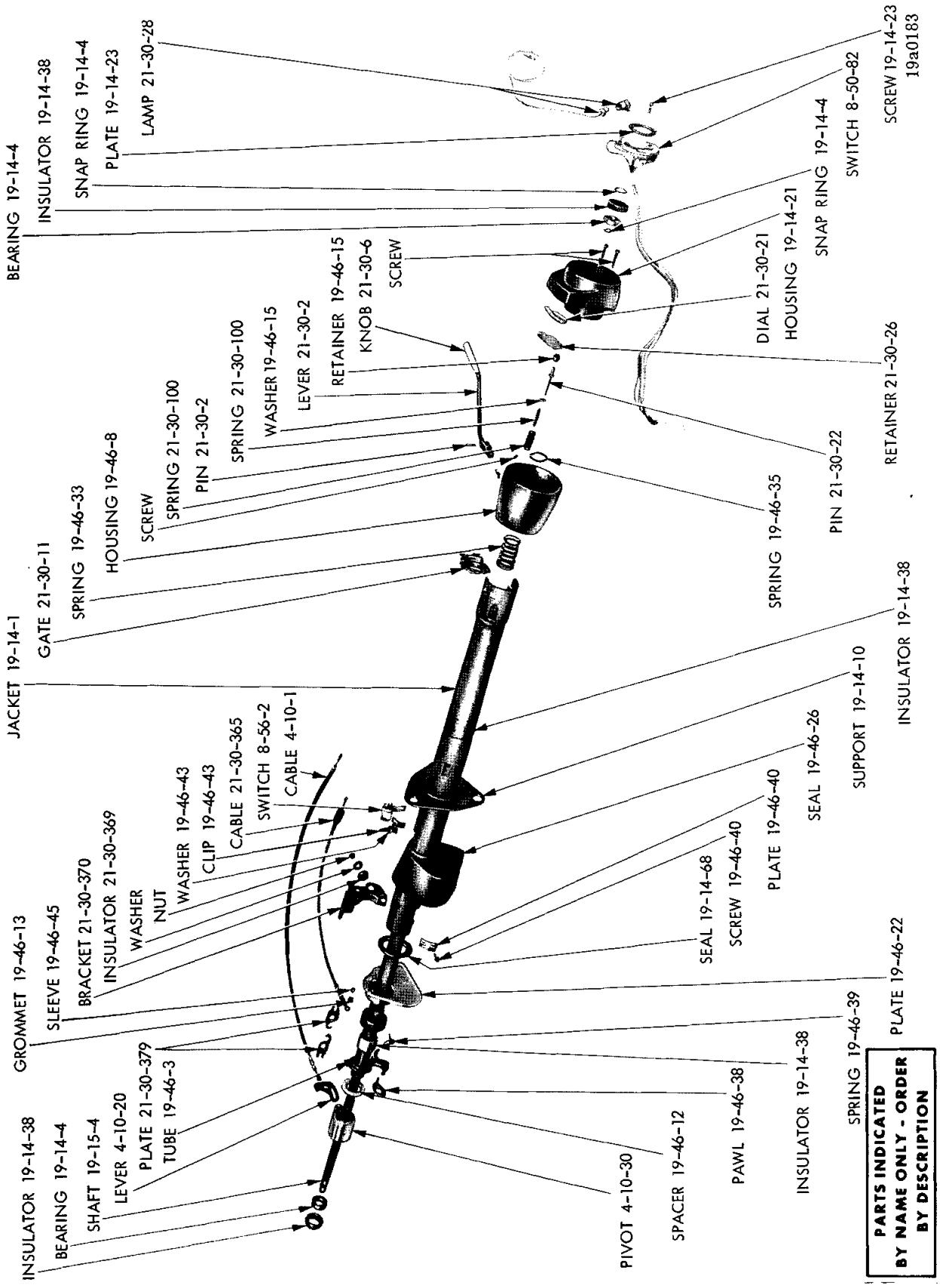

STEERING GEAR COLUMN AND SHAFT (WITH TRANSMISSION SHIFT-AUTO.) - BELVEDERE AND CORONET

MyMopar.com

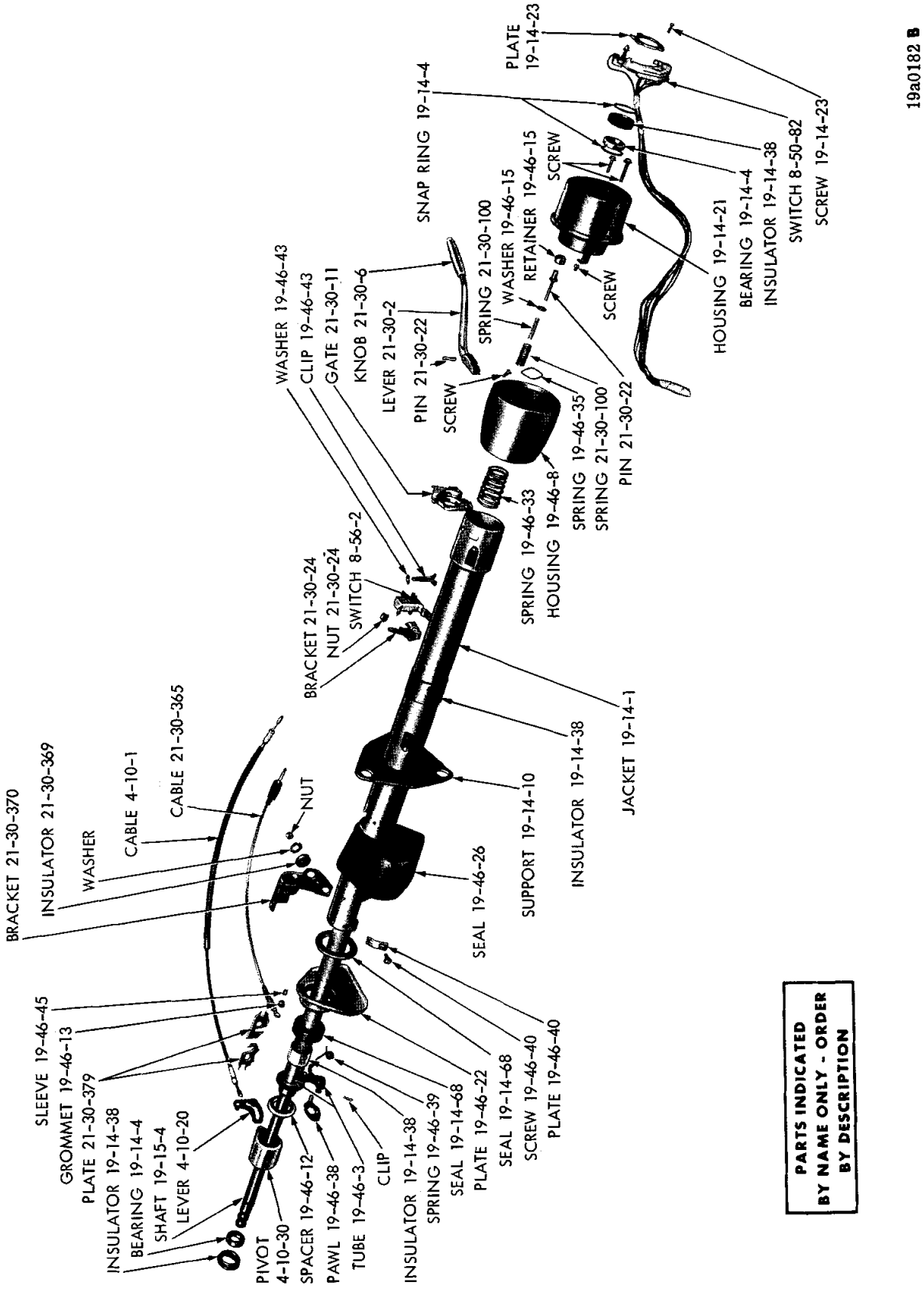

PARTS INDICATED BY NAME ONLY - ORDER BY DESCRIPTION

STEERING GEAR COLUMN AND SHAFT (WITH AUTOMATIC TRANSMISSION SHIFT) - PLYMOUTH, DODGE AND CHRYSLER

MyMopar.com

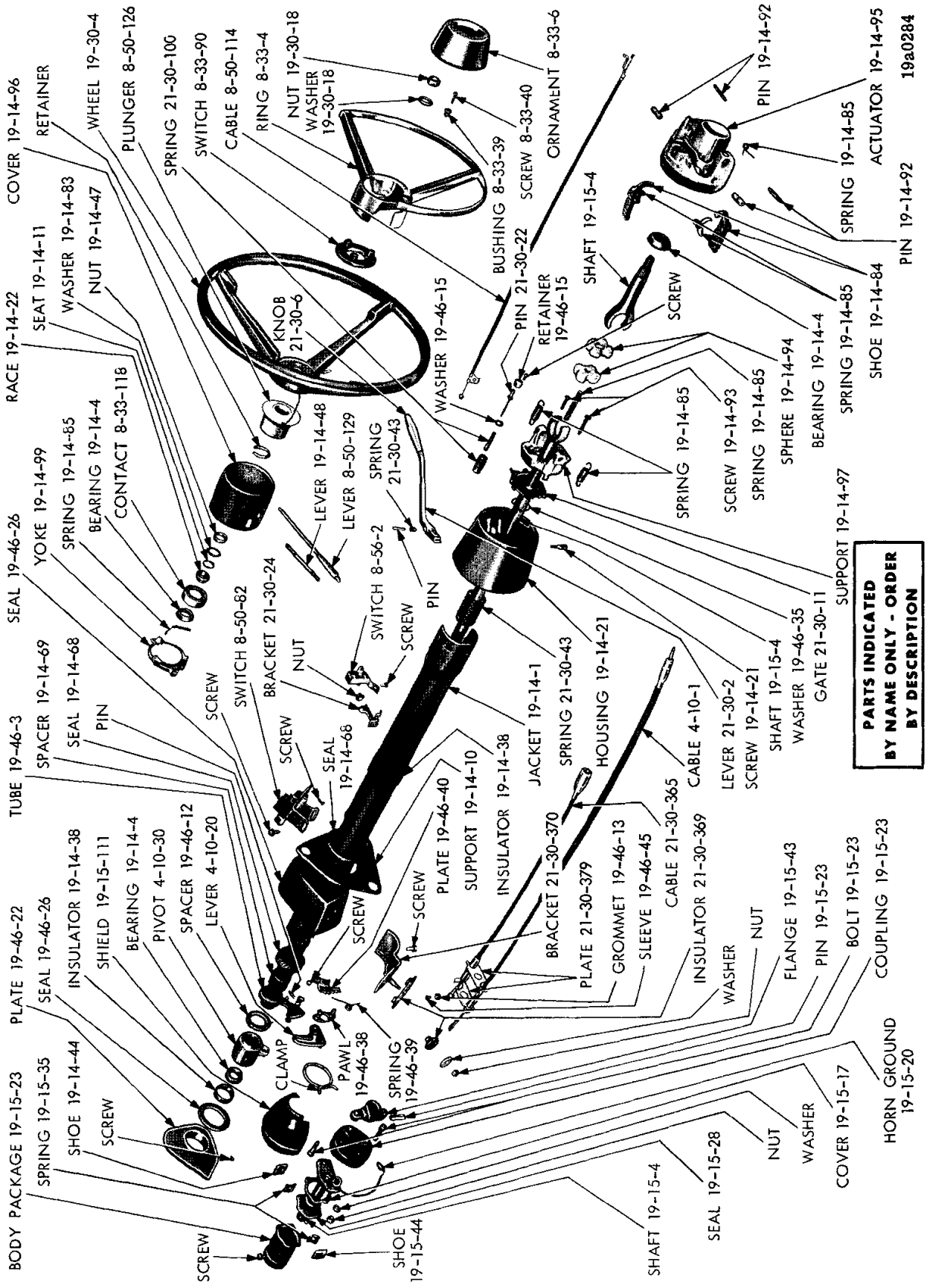

PARTS INDICATED BY NAME ONLY - ORDER BY DESCRIPTION

ADJUSTABLE TILT STEERING WHEEL - PLYMOUTH, DODGE AND CHRYSLER

MyMopar.com

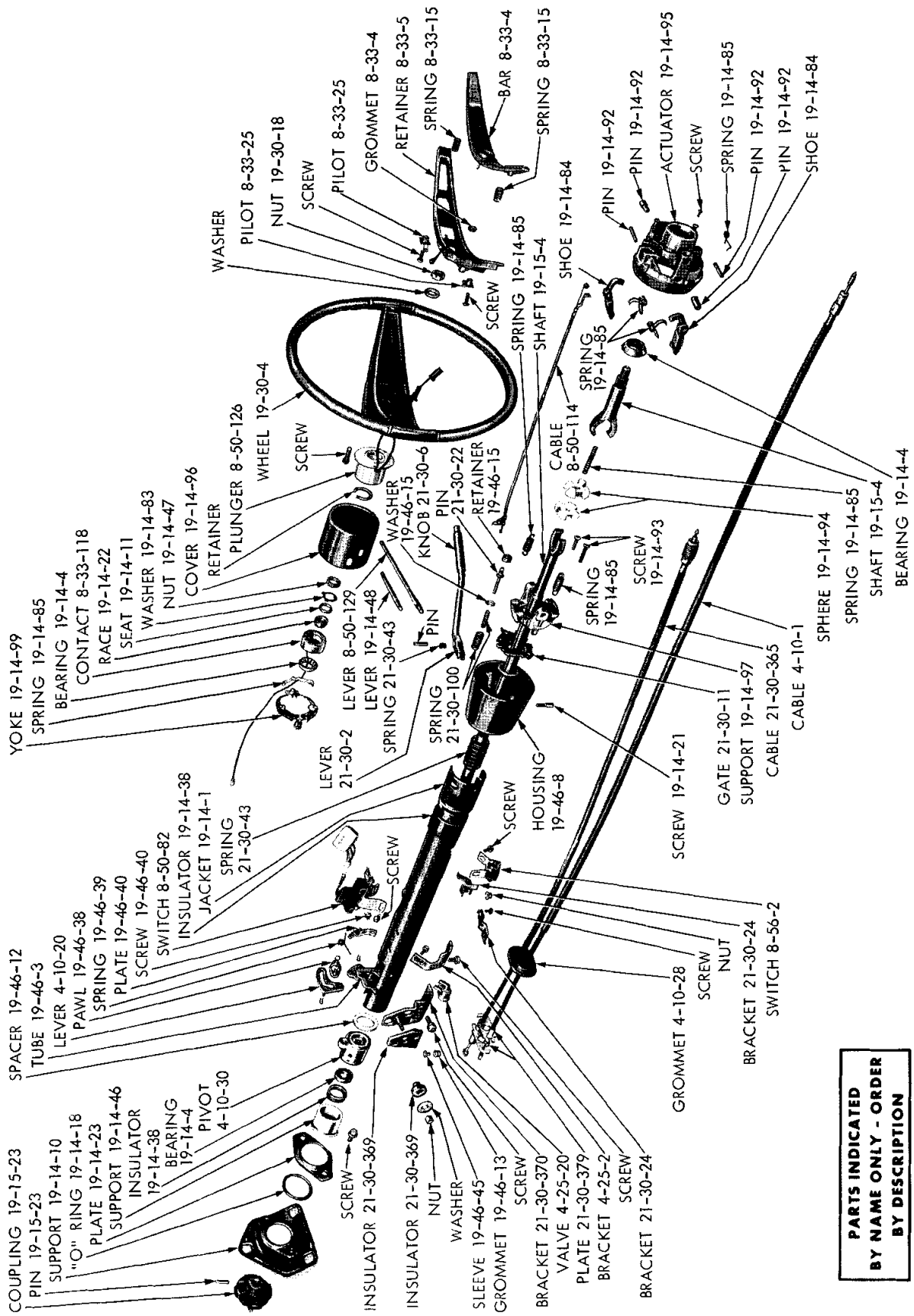

ADJUSTABLE TILT STEERING WHEEL - IMPERIAL

MyMopar.com

POWER STEERING

CODE	PART NAME AND DESCRIPTION	CYL	PER CAR	VALIANT / DART	PLYMOUTH BELVEDERE / DODGE CORONET	PLYMOUTH FURY / DODGE POLARA / CHRYSLER	IMPERIAL
19-01-0	**STEERING GEAR ASSEMBLY**						
19-01-4	"O" RING and SEAL PACKAGE		1	2448 311	---- ---	2448 309	2448 310
	w/10.30 lgh. Steering Gear Shaft		1	---- ---	2448 311		
	w/10.45 to 10.51 lgh. Steering Gear Shaft		1	---- ---	2448 309		
19-01-8	CHUCK, Steering Gear	6	1	2267 700			
		8	1	2267 701			
	w/10.30 lgh. Shaft		1	---- ---	2267 700		
	w/10.45 to 10.51 lgh. Shaft		1	---- ---	2267 708		
			1	---- ---	---- ---	2267 525	2267 702
19-01-12	BOLT, Steering Gear Housing to Frame Wedge		2	---- ---	---- ---	---- ---	2201 620
19-01-50	SPRING, Steering Gear Reaction		2	1822 134	1822 134	1822 134	*2267 532
19-01-51	RING, Steering Gear Reaction		2	1822 150	1822 150	1822 150	1733 791
19-01-52	SEAL, Steering Gear Reaction, Upper		1	1822 151	1822 151	1822 151	1733 593
	"O" RING, Steering Gear Reaction, Lower		1	1822 149	1822 149	1822 149	1823 091
19-01-53	WASHER, Reaction Seal Upper		1	1733 790	1733 790	1733 790	1733 790
19-01-60	HEAD, Cylinder		1	1823 157	1823 157	1823 157	1823 161
19-01-61	"O" RING, Steering Gear Cylinder Head		2	1733 562	1733 562	1733 562	1733 562
	"O" RING, Steering Gear Cylinder Head Ferrule		1	1486 205	1486 205	1486 205	1486 205
19-01-62	SNAP RING, Cylinder Head		1	1822 321	1822 321	1822 321	1822 321
19-02-0	**STEERING GEAR HOUSING**						
19-02-4	HOUSING		1	2127 012			
	w/10.30 lgh. Shaft		1	---- ---	2127 012		
	w/10.45 to 10.51 lgh. Shaft		1	---- ---	2537 136		
			1	---- ---	---- ---	2267 527	
	HOUSING PACKAGE		1	---- ---	---- ---	---- ---	2240 602
	BOLT, to Frame		2	---- ---	---- ---	6025 237	
	STUD, to Frame		1	---- ---	---- ---	2128 773	
19-02-13	BOLT, Steering Gear Housing to Frame		1	---- ---	---- ---	---- ---	2200 556
19-02-15	"O" RING, Steering Gear Housing		1	1823 150	1823 150	1823 150	1823 150
	"O" RING, Housing Port		2	1556 385	1556 385	1556 385	1556 385
19-02-18	WASHER, Steering Gear Housing to Frame Bolt		6	---- ---	---- ---	---- ---	566 170
19-02-20	SPACER, Steering Gear Housing to Frame		5	---- ---	---- ---	---- ---	1671 586
19-02-21	WEDGE, Steering Gear Housing to Frame		1	---- ---	---- ---	---- ---	1671 587
19-02-55	HEAD, Steering Gear Housing		1	2126 946	2126 946	2126 946	2267 491
19-14-0	**STEERING COLUMN JACKET**						
19-14-1	JACKET, w/Manual and Auto. Trans. Floor Shift		1	2265 621			
	w/Manual Trans. Column Shift		1	2405 612			

TYPE LETTERS Indicate: V - Valiant, L - Dart, R - Belvedere, W - Coronet, P - Plymouth, D - Dodge, C - Chrysler, Y - Imperial

★Indicates use as required. Numerals in parentheses ( ) refer to notes. Printed in U.S.A.

⊟Indicates parts not listed in any previous parts book. Prices and specifications subject to change without notice.

* Indicates change or addition. March 1966 Supersedes May 1965.

MyMopar.com

POWER STEERING

19-14-0 STEERING COLUMN JACKET - Cont'd

CODE	PART NAME AND DESCRIPTION	CYL	PER CAR	VALIANT / DART	PLYMOUTH BELVEDERE / DODGE CORONET	PLYMOUTH FURY / DODGE POLARA / CHRYSLER	IMPERIAL
19-14-1	JACKET - Cont'd						
	w/Auto. Trans.		1	2467 859			
	w/Auto. Trans. Column Shift, R-L, R-H, W-L, W-H		1	---- ---	2467 818		
	w/Auto. Trans. Floor Shift, R2-P, W2-P	8	1	---- ---	2265 621		
	w/Manual Trans. Column Shift		1	---- ---	2265 670		
	w/Manual Trans. Floor Shift	8	1	---- ---	2265 621		
	w/Auto. Trans. Column Shift, P, D2, C1, C2-M, C3		1	---- ---	---- ---	2530 181	
	w/Manual Trans. Column Shift, P, D2, C1, C2-M		1	---- ---	---- ---	2265 670	
	w/Manual and Auto. Trans. Floor Shift		1	---- ---	---- ---	2530 197	
	w/Manual and Auto. Trans. Floor Shift, w/Adjustable Tilt Steering Wheel, P, D2		1	---- ---	---- ---	2530 973	
	w/Auto. Trans. Column Shift, w/Adjustable Tilt Steering Wheel, P, D		1	---- ---	---- ---	2533 727	
	w/Manual and Auto. Trans. Floor Shift, w/Adjustable Tilt Steering Wheel, C	8	1	---- ---	---- ---	2530 974	
	w/Auto. Trans. Column Shift, w/Adjustable Tilt Steering Wheel, C	8	1	---- ---	---- ---	2533 728	
	w/Auto. Trans. Column Shift		1	---- ---	---- ---	---- ---	2530 196
19-14-4	BEARING, Steering Column Shaft, w/o Adjustable Tilt Steering Wheel		1	2265 656	2265 656	2265 656	2265 656
	Lower		1	---- ---	---- ---	2530 570	2530 570
	BEARING, Steering Shaft, w/Adjustable Tilt Steering Wheel		2	---- ---	---- ---	2467 780	2467 780
	SNAP RING, Upper		1	6024 333	6024 333	6024 333	6024 333
	SNAP RING, Lower		1	6023 045	6023 045	6023 045	6023 045
19-14-10	SUPPORT, Column Jacket, Upper		1	2530 507	2530 500	2530 524	
	Lower		1	2530 514	2530 503		
	Lower, w/Auto. Trans. Column and Floor Shift		1	---- ---	---- ---	2530 517	
	Lower, w/Manual Trans. Column and Floor Shift		1	---- ---	---- ---	2530 518	
	SUPPORT, Instrument Panel		1	---- ---	---- ---	---- ---	2409 568
	Steering Column to Pedal Bracket		1	---- ---	2217 706		
	EXTENSION, Instrument Panel Steering Column to Pedal Bracket		1	---- ---	2491 867		
19-14-11	SEAT, Inner Race, w/Adjustable Tilt Steering Wheel		1	---- ---	---- ---	*2643 681	*2643 681
19-14-13	WASHER, Steering Gear Column Jacket Support Nut		1	1733 588	1733 588	1733 588	1733 588
19-14-18	"O" RING, Steering Gear Column Jacket Support		1	1733 602	1733 602	1733 602	1733 602
	"O" RING, Steering Column Jacket Support		1	---- ---	---- ---	---- ---	*6024 272
19-14-19	NUT, Steering Gear Column Jacket Support		1	1733 625	1733 625	1733 625	1733 625
19-14-21	HOUSING, Steering Column Shaft Bearing, w/Auto. Trans. Column Shift		1	2467 852	2467 852		
	w/Manual Trans. Column and Floor Shift		1	2265 653	2265 653		

TYPE LETTERS Indicate: V - Valiant, L - Dart, R - Belvedere, W - Coronet, P - Plymouth, D - Dodge, C - Chrysler, Y - Imperial

★Indicates use as required. Numerals in parentheses ( ) refer to notes. Printed in U.S.A.

⊟Indicates parts not listed in any previous parts book. Prices and specifications subject to change without notice.

May 1965, Supersedes Nov. 30, 1964. * Indicates change or addition.

MyMopar.com

POWER STEERING

19-14-0 STEERING COLUMN JACKET - Cont'd

CODE	PART NAME AND DESCRIPTION	CYL	PER CAR	VALIANT / DART	PLYMOUTH BELVEDERE / DODGE CORONET	PLYMOUTH FURY / DODGE POLARA / CHRYSLER	IMPERIAL
19-14-21	HOUSING - Cont'd						
	w/Auto. Trans. Floor Shift		1	2265 653	2265 653		
	w/Manual Trans. Floor Shift, w/Auto. Trans. Column and Floor Shift		1	---- ---	---- ---	2530 233	2530 233
	SCREW		1	⊟6025 695	⊟6025 695	⊟6025 695	⊟6025 695
	BOLT		2	*6023 036	*6023 036	*6023 036	
19-14-22	RACE, Inner, w/Adjustable Tilt Steering Wheel		1	---- ---	---- ---	2643 680	2643 680
19-14-23	PLATE, Steering Column Shaft Bearing Retainer		1	2265 654	2265 654	2265 654	2265 654
	PLATE, Steering Column Jacket Support, Lower		1	---- ---	2530 504		
	PLATE, Steering Column Jacket Support "O" Ring		1	---- ---	---- ---	---- ---	2409 572
19-14-24	COVER, Steering Column Shaft Bearing Housing, w/Auto and Manual Trans. Floor Shift		1	2265 622	2265 622		
	w/Manual and Auto. Trans. Floor Shift, P, D		1	---- ---	---- ---	2530 229	
	w/Manual and Auto. Trans. Floor Shift, C	8	1	---- ---	---- ---	2530 235	
19-14-25	HOUSING, Instrument Panel Steering Column, Upper		1	---- ---	---- ---	---- ---	2571 403
	Lower		1	---- ---	---- ---	---- ---	2571 405
19-14-35	CLAMP, Steering Column		1	2631 331			
	CLAMP, Instrument Panel Steering Column, Upper		1	---- ---	2571 409		
	Lower		1	---- ---	2631 333		
	CLAMP, Instrument Panel Steering Column, P, D		1	---- ---	---- ---	2570 972	
	C	8	1	---- ---	---- ---	2492 693	2162 191
19-14-38	INSULATOR, Steering Column Shaft Bearing		1	2265 658	2265 658	2265 658	2265 658
	Lower		1	---- ---	---- ---	2530 566	2530 566
	INSULATOR, Steering Column Jacket, w/o Adjustable Tilt Steering Wheel		1	2162 480	2162 480	2162 480	2162 480
	w/Adjustable Tilt Steering Wheel		1	---- ---	---- ---	2534 283	2534 283
19-14-40	SEAL, Steering Column Jacket Support Plate, Lower		1	2530 513	2530 506	2530 523	
19-14-46	SUPPORT, Steering Column Shaft Bearing Lower		1	---- ---	---- ---	---- ---	2530 972
19-14-47	NUT, Upper Bearing, w/Adjustable Tilt Steering Wheel		1	---- ---	---- ---	2643 679	2643 679
19-14-48	LEVER, Steering Column Release, w/Adjustable Tilt Steering Wheel		1	---- ---	---- ---	2533 934	2533 934
19-14-68	SEAL, Steering Column Jacket		1	2265 697	2265 697	2530 529	
	Inner		1	2533 998	2533 998	2533 998	2533 998

TYPE LETTERS Indicate: V - Valiant, L - Dart, R - Belvedere, W - Coronet, P - Plymouth, D - Dodge, C - Chrysler, Y - Imperial

★Indicates use as required. Numerals in parentheses ( ) refer to notes. Printed in U.S.A.
⊟Indicates parts not listed in any previous parts book. Prices and specifications subject to change without notice.
* Indicates change or addition. May 1965, Supersedes Nov. 30, 1964.

MyMopar.com

POWER STEERING

19-14-0 STEERING COLUMN JACKET - Cont'd

CODE	PART NAME AND DESCRIPTION	CYL	PER CAR	VALIANT / DART	PLYMOUTH BELVEDERE / DODGE CORONET	PLYMOUTH FURY / DODGE POLARA / CHRYSLER	IMPERIAL
19-14-69	SPACER, Seal		1	2461 049	2461 049	2461 049	2461 049
19-14-83	WASHER, Lock Tab, w/Adjustable Tilt Steering Wheel		1	---- ---	---- ---	2643 682	2643 682
19-14-84	SHOE, Lock, w/Adjustable Tilt Steering Wheel		1	---- ---	---- ---	2467 776	2467 776
	SHOE, Lock, Lower, w/Adjustable Tilt Steering Wheel		1	---- ---	---- ---	2467 778	2467 778
19-14-85	SPRING, Lock Shoe (1)		2	---- ---	---- ---	2467 779	2467 779
	SPRING, Wheel Tilt (1)		2	---- ---	---- ---	2467 802	2467 802
	SPRING, Detent (1)		1	---- ---	---- ---	2467 807	2467 807
	SPRING, Trigger (1)		2	---- ---	---- ---	2467 808	2467 808
	SPRING, Joint Preload		1	---- ---	---- ---	2467 811	2467 811
	NOTE 1: w/Adjustable Tilt Steering Wheel.						
19-14-91	RING, Post Retainer, w/Adjustable Tilt Steering Wheel		1	---- ---	---- ---	2467 805	2467 805
19-14-92	PIN, Dowel, w/Adjustable Tilt Steering Wheel		2	---- ---	---- ---	2467 777	2467 777
	PIN, Pivot, w/Adjustable Tilt Steering Wheel		2	---- ---	---- ---	2467 797	2467 797
19-14-93	SCREW, Support, w/Adjustable Tilt Steering Wheel		2	---- ---	---- ---	2467 799	2467 799
			2	---- ---	---- ---	2467 800	2467 800
	SCREW, Wire Attaching, w/Adjustable Tilt Steering Wheel		1	---- ---	---- ---	2467 806	2467 806
19-14-94	SPHERE, Centering, w/Adjustable Tilt Steering Wheel		2	---- ---	---- ---	2643 677	2643 677
19-14-95	ACTUATOR, w/Housing, Turn Signal, w/Adjustable Tilt Steering Wheel		1	---- ---	---- ---	2467 803	2467 803
19-14-96	COVER, Switch Actuator, w/Adjustable Tilt Steering Wheel		1	---- ---	---- ---	2643 683	2643 683
19-14-97	SUPPORT, w/Adjustable Tilt Steering Wheel		1	---- ---	---- ---	2467 793	2467 793
19-14-99	YOKE, w/Adjustable Tilt Steering Wheel		1	---- ---	---- ---	2467 804	2467 804

19-15-0 STEERING COLUMN SHAFT AND COUPLING

19-15-4	SHAFT, w/Wide Flute of Serrations Horizontal to Pin at End of Shaft		1	*2530 562	*2530 564		
	w/Wide Flute of Serrations Vertical to Pin at End of Shaft		1	⊟2768 218	*2768 220		
	SHAFT, Upper		1	---- ---	---- ---	2530 554	2530 833
	SHAFT, Lower, w/Flange Mounted Vertical to Pin at End of Shaft		1	---- ---	---- ---	*2530 535	
	w/Flange Mounted 40° From Vertical to Pin at End of Shaft		1	---- ---	---- ---	*2768 205	
	SHAFT, Upper Steering, w/Adjustable Tilt Steering Wheel		1	---- ---	---- ---	2643 678	2643 678

TYPE LETTERS Indicate: V - Valiant, L - Dart, R - Belvedere, W - Coronet, P - Plymouth, D - Dodge, C - Chrysler, Y - Imperial

★Indicates use as required. Numerals in parentheses ( ) refer to notes. Printed in U.S.A.

⊟Indicates parts not listed in any previous parts book. Prices and specifications subject to change without notice.

March 1966 Supersedes May 1965. * Indicates change or addition.

MyMopar.com

POWER STEERING

19-15-0 STEERING COLUMN SHAFT AND COUPLING - Cont'd

CODE	PART NAME AND DESCRIPTION	CYL	PER CAR	VALIANT / DART	PLYMOUTH BELVEDERE / DODGE CORONET	PLYMOUTH FURY / DODGE POLARA / CHRYSLER	IMPERIAL
19-15-4	SHAFT KIT, Upper, w/Adjustable Tilt Steering Wheel		1	---- ---	---- ---	2643 699	2643 699
	SHAFT, Lower, w/Adjustable Tilt Steering Wheel, P, D		1	---- ---	---- ---	2643 685	
	C		1	---- ---	---- ---	2643 688	2643 691
19-15-17	COVER, Steering Column Coupling		1	2530 538	2530 538	2530 538	
19-15-20	HORN GROUND, Steering Column Shaft Coupling, w/TERMINALS		1	---- ---	---- ---	*2497 251	
	SPRING, Steering Column Coupling Ground w/o Terminals		1	---- ---	---- ---	*2768 287	
19-15-23	BODY, Steering Column Coupling, Screw Type		1	2530 820	2530 820	2530 820	
	BODY PACKAGE, Steering Column Coupling, Pin Type		1	2585 335	2585 335	2585 335	
	COUPLING, Steering Column Shaft		1	---- ---	2530 541	2530 541	2533 739
	PIN		1	9422 159	9422 159	9422 159	9422 159
	BOLT, R, W, Police Cars		★	---- ---	6025 278	6025 278	6025 278
	BOLT, R, W, Police Cars		2	---- ---	9422 009	9422 009	⊟9422 009
	BOLT		1	6025 257	6025 257	6025 257	
19-15-28	SEAL, Steering Column Coupling Cover		1	2530 848	2530 848	2461 996	
	SEAL, Steering Column Shaft		1	2266 738	2266 738		
19-15-33	CLAMP, Steering Column Coupling Shield		1	---- ---	---- ---	870 469	
19-15-35	SPRING, Steering Column Coupling		2	2530 540	2530 540	2530 540	
19-15-38	WORM, w/PISTON, Steering Gear		1	2072 031	2072 031	2072 031	1822 736
19-15-39	SPRING PACKAGE, Steering Gear Ball Guide		1	2084 215	2084 215	2084 215	2084 215
19-15-43	FLANGE, Steering Column Shaft Coupling, w/Wide Flute of Serrations Vertical to Pin Mounting		1	---- ---	---- ---	*2530 189	
	w/Wide Flute of Serrations 50 Degrees From Vertical to Pin Mounting		1	---- ---	---- ---	⊟2768 206	
	PIN		1	---- ---	---- ---	*9422 159	
19-15-44	SHOE, Steering Column Coupling		2	2530 539	2530 539	2530 539	
19-15-60	BEARING, Steering Gear Worm		1	2267 372	2267 372	2267 372	2267 372
	Gear Thrust		2	1822 158	1822 158	1822 158	1822 158
19-15-63	RACE, Steering Gear Thrust Bearing Inner		1	1856 292	1856 292	1856 292	1856 292
	Outer		1	1822 156	1822 156	1822 156	1822 156
19-15-65	NUT, Steering Gear Thrust Bearing		1	1822 157	1822 157	1822 157	1822 157
19-15-69	SPACER, w/Center Race, Steering Gear		1	1822 390	1822 390	1822 390	1822 390
19-15-74	PLATE, Steering Column Shaft Bearing Housing, w/Auto. and Manual Trans. Floor Shift		1	---- ---	---- ---	2530 238	

TYPE LETTERS Indicate: V - Valiant, L - Dart, R - Belvedere, W - Coronet, P - Plymouth, D - Dodge, C - Chrysler, Y - Imperial

★Indicates use as required. Numerals in parentheses ( ) refer to notes. Printed in U.S.A.
⊟Indicates parts not listed in any previous parts book. Prices and specifications subject to change without notice.
• Indicates change or addition. March 1966 Supersedes May 1965.

MyMopar.com

POWER STEERING

CODE	PART NAME AND DESCRIPTION	CYL	PER CAR	VALIANT / DART	PLYMOUTH BELVEDERE / DODGE CORONET	PLYMOUTH FURY / DODGE POLARA / CHRYSLER	IMPERIAL
19-15-0	**STEERING COLUMN SHAFT AND COUPLING - Cont'd**						
19-15-111	SHIELD, Steering Column Coupling, Clamp Mounting		1	---- ---	---- ---	2461 044	
	SCREW Mounting		1	---- ---	---- ---	2768 255	
	CLAMP, Clamp Mounting Shield		1	---- ---	---- ---	870 469	
19-19-0	**STEERING GEAR SHAFT**						
19-19-1	SEAL PACKAGE, Cover		1	2279 986	2279 986	2279 986	2279 986
19-19-4	SHAFT, 10.30 lgh.		1	2127 117	2127 117		
	10.45 to 10.51 lgh.		1	---- ---	2267 477	2267 477	
			1	---- ---	---- ---	---- ---	1733 577
19-19-5	SNAP RING, Oil Seal, w/10.30 lgh. Shaft		1	2126 966	2126 966		
	w/10.45 to 10.51 lgh. Shaft		1	---- ---	2127 049	2127 049	2127 049
19-19-7	SCREW, Adjusting		1	2267 173	2267 173	2267 173	2267 173
19-19-9	NUT, Adjusting Screw		1	1822 204	1822 204	1822 204	1822 204
19-19-19	BEARING, w/10.30 lgh. Shaft		2	2126 890	2126 890		
	w/10.45 to 10.51 lgh. Shaft		2	---- ---	2126 760	2126 760	
			2	---- ---	---- ---	---- ---	2126 760
19-19-24	COVER		1	1733 601	1733 601	1733 601	1733 601
19-19-26	"O" RING, Cover		1	1733 615	1733 615	1733 615	1733 615
19-19-30	WASHER, Steering Gear Reaction Seal Upper		1	1733 790	1733 790	1733 790	1733 790
19-19-32	NUT, Cover		1	1733 627	1733 627	1733 627	1733 627
19-19-35	OIL SEAL, w/10.30 lgh. Shaft		1	2126 956	2126 956		
	w/10.45 to 10.51 lgh. Shaft		1	---- ---	1730 985	1730 985	1730 985
	Upper		1	2267 129	2267 129	2267 129	2267 129
	SEAL, Adjusting Screw		1	1822 203	1822 203	1822 203	1822 203
19-19-36	RETAINER, Oil Seal, w/10.30 lgh. Shaft		1	2126 965	2126 965		
	w/10.45 to 10.51 lgh. Shaft		1	---- ---	1670 356	1670 356	1670 356
19-19-38	DUST SEAL, w/10.30 lgh. Shaft		1	2267 351	2267 351		
	w/10.45 to 10.51 lgh. Shaft		1	---- ---	2267 350	2267 350	2267 350
19-19-40	WASHER, Adjusting Screw Thrust		1	1675 271	1675 271	1675 271	1675 271
19-19-70	SEAL, Steering Gear Worm		1	1822 324	1822 324	1822 324	1822 324
19-19-71	RING, Steering Gear Worm Sealing		1	1822 406	1822 406	1822 406	1822 406
19-19-72	SLEEVE, Steering Gear Worm		1	1822 320	1822 320	1822 320	1822 320
19-27-0	**STEERING LINK GEAR ARM AND IDLER ARM**						
19-27-2	ARM, Link Gear		1	*2072 573	---- ---	*2269 399	*1731 415
	w/10.30 lgh. Shaft		1	---- ---	*1858 017		
	w/10.45 to 10.51 lgh. Shaft		1	---- ---	⊟2462 804		

TYPE LETTERS Indicate: V - Valiant, L - Dart, R - Belvedere, W - Coronet, P - Plymouth, D - Dodge, C - Chrysler, Y - Imperial

★Indicates use as required. Numerals in parentheses ( ) refer to notes. Printed in U.S.A.

⊟Indicates parts not listed in any previous parts book. Prices and specifications subject to change without notice.

March 1966 Supersedes May 1965. * Indicates change or addition.

MyMopar.com

POWER STEERING

CODE	PART NAME AND DESCRIPTION	CYL	PER CAR	VALIANT / DART	PLYMOUTH BELVEDERE / DODGE CORONET	PLYMOUTH FURY / DODGE POLARA / CHRYSLER	IMPERIAL
19-27-0	**STEERING LINK GEAR ARM AND IDLER ARM - Cont'd**						
19-27-8	NUT, Steering Link Gear Arm End Cross Shaft		1	2207 359	2207 359	2207 359	
	Steering Link Gear Arm		1	---- ---	---- ---	---- ---	2207 359
19-27-31	ARM, Steering Link Idler, Y1 except Cv. Cp. . .		1	2072 577	1858 067	2269 679	2269 696
	w/DAMPER, Cv.Cp.		1	---- ---	---- ---	---- ---	2208 074
	BOLT		★	---- ---	---- ---	6023 630	6023 630
19-27-33	BRACKET, Front Suspension Crossmember Steering Linkage Idler Arm		1	2401 053	2401 051		
	BRACKET, Frame Steering Linkage Idler Arm, except Cv.Cp.		1	---- ---	---- ---	---- ---	2401 063
19-27-37	PLATE, Frame Idler Arm Mounting, Cv.Cp. .		1	---- ---	---- ---	---- ---	2467 662
19-27-40	SEAL, Steering Link Idler Arm Bracket Stud .		1	1857 748	1670 299		
	SEAL, Steering Link Idler Arm End		1	1857 748	1670 299		
19-27-50	LINK, Steering Link Center	6	1	2072 571			
		8	1	2269 359			
			1	---- ---	1858 015	2269 393	1672 980
19-27-51	PLUG, Steering Link Gear Arm End Cover . .		1	1858 115	1858 115		
	Steering Link Gear Arm Stud		1	---- --	---- ---	1858 115	
19-27-55	SEAL, Steering Link Center Link.		2	---- ---	---- ---	---- ---	1670 299
19-30-0	**STEERING WHEEL**						
19-30-4	WHEEL, Red, w/Trim Codes H1R, H4R, L1R, L4R, P4R, w/Model V.		1	4006 TR6			
	White, w/Trim Codes All		1	4006 TW4			
	Red, w/Trim Codes H1R, H4R, H5R, H8R, L1R, L4R, L5R, P4R, w/Model L		1	4006 AR7			
	Yellow Tan, w/Three Spokes, w/Trim Codes All		1	4016 VTT			
	Blue, w/Trim Codes H1B, H4B, H5B, H8B, L1B, L4B, L5B, P4B, w/Model W		1	*4006 VB6	*4006 VB6		
	Turquois, w/Trim Codes H1Q, H4Q, L1Q, L4Q, w/Model W		1	*4006 VQ6	*4006 VQ6		
	Yellow Tan, w/Trim Codes H1T, H4T, H5T, H8T, L1T, L4T, L5T, P4T, w/Model W. . .		1	*4006 VT6	*4006 VT6		
	Black, w/Trim Code P4X		1	4006 VX9			
	Yellow Gold, w/Trim Code P4Y.		1	4006 VY6			
	White, w/Two Spokes, w/Trim Codes All, w/Model R, W, D		1	---- ---	4004 AW4	4004 AW4	
	Black, w/Two Spokes, w/Trim Codes H4X, P4X, K1B, K1R, K1T, K2T, K8T, K4B, K4R, K4T, X1P, T8T, L9X, K2A, K8A, L2A, L8A, L4X, L3X, w/Models R, W, P, D		1	---- ---	4004 AX9	4004 AX9	
	Yellow Gold, w/Two Spokes, w/Trim Codes H1Y, H4Y, L1Y, L4Y, K1Y, P4Y, w/Models W, R, D		1	---- ---	4002 AY3	4002 AY3	
	Red, w/Two Spokes, w/Trim Codes H1R, H4R, L1R, L4R, L5R, P4R, K1R, K4R, w/Model R		1	---- ---	4004 AR6		

TYPE LETTERS Indicate: V - Valiant, L - Dart, R - Belvedere, W - Coronet, P - Plymouth, D - Dodge, C - Chrysler, Y - Imperial

★Indicates use as required. Numerals in parentheses ( ) refer to notes. Printed in U.S.A.

⊟Indicates parts not listed in any previous parts book. Prices and specifications subject to change without notice.

* Indicates change or addition. March 1966 Supersedes May 1965.

MyMopar.com

POWER STEERING

CODE	PART NAME AND DESCRIPTION	CYL	PER CAR	VALIANT / DART	PLYMOUTH BELVEDERE / DODGE CORONET	PLYMOUTH FURY / DODGE POLARA / CHRYSLER	IMPERIAL
19-30-0	**STEERING WHEEL - Cont'd**						
19-30-4	WHEEL - Cont'd						
	Red, w/Two Spokes, w/Trim Codes H1R, H4R, H5R, K1R, K4R, L1R, L3R, L4R, L5R, L9R, P4R, w/Models W, D	8	1	---- ---	4002 AR7	4002 AR7	
	Yellow Tan, w/Two Spokes, w/Trim Codes H1T, H4T, H5T, L1T, L2T, L3T, L4T, L5T, L8T, K1T, K2T, K4T, K8T, T8T, P4T, w/Models W, R, D		1	---- ---	4002 AT6	4002 AT6	
	Blue, w/Two Spokes, w/Trim Codes H1B, H4B, H5B, L1B, L3B, L4B, L5B, L9B, P4B, K1B, K4B, w/Models R, W, D		1	---- ---	4002 AB4	4002 AB4	
	Turquoise, w/Two Spokes, w/Trim Codes H1Q, H4Q, K1Q, K4Q, L1Q, L4Q, P4Q, w/Models W, R, D		1	---- ---	4002 AQ4	4002 AQ4	
	Black, w/Two Spokes, w/Trim Code H5X, w/Model P		1	---- ---	---- ---	4003 AX9	
	Yellow Gold, w/Two Spokes, w/Trim Codes H1Y, H2Y, H4Y, H5Y, w/Model P		1	---- ---	---- ---	4003 AY3	
	White, w/Two Spokes, w/Trim Codes All, w/Model P		1	---- ---	---- ---	4003 AW4	
	Red, w/Two Spokes, w/Trim Codes H1R, H2R, H4R, H5R, L1R, L4R, L5R, M1R, M4R, M5R, w/Model P		1	---- ---	---- ---	4003 AR7	
	Yellow Tan, w/Two Spokes, w/Trim Codes H1T, H2T, H4T, L1T, L2T, L4T, L5T, L8T, M1T, M4T, M5T, T8T, w/Model P		1	---- ---	---- ---	4003 AT6	
	Blue, w/Two Spokes, w/Trim Codes H1B, H2B, H4B, H5B, L1B, L4B, L5B, M1B, M4B, M5B, w/Model P		1	---- ---	---- ---	4003 AB6	
	Turquoise, w/Two Spokes, w/Trim Codes H1Q, H2Q, H4Q, H5Q, M1Q, M4Q, w/Model P		1	---- ---	---- ---	4003 AQ6	
	Black, w/Three Spokes, w/o Spoke Cover, w/Trim Codes H4X, H5X, L2A, L8A, L3X, L4X, L9X, P4X, P4U, P4W, M3X, M4X, w/Models P, D, C1, C2		1	---- ---	---- ---	4000 AX9	
	Black, w/Three Spokes, w/Spoke Cover, w/Trim Codes L4X, L9X, M3X, M4X, P3X, P4X, w/Models C1, C2	8	1	---- ---	---- ---	4020 AX9	
	Blue, w/Three Spokes, w/o Spoke Cover, w/Trim Codes L1B, L2B, L3B, L4B, L5B, L9B, H1B, H2B, H4B, H5B, M1B, M4B, M5B, P1B, P4B, w/Models P, D, C1, C2		1	---- ---	---- ---	4001 AB4	
	Turquoise, w/Three Spokes, w/o Spoke Cover, w/Trim Codes H1Q, H2Q, H4Q, H5Q, L1Q, L2Q, L4Q, L8Q, M1Q, M4Q, P4Q, P1Q. w/Models P, D, C1		1	---- ---	---- ---	*4001 AQ4	
	Red Tan, w/Three Spokes, w/o Spoke Cover, w/Trim Code P4U, w/Model D	8	1	---- ---	---- ---	4001 AU9	
	Yellow Gold, w/Three Spokes, w/o Spoke Cover, w/Trim Codes H1Y, H2Y, H4Y, H5Y, L1Y, L4Y, L2L, L4L, M4L, w/Models P, D, C1, C2		1	---- ---	---- ---	4001 AY3	

TYPE LETTERS Indicate: V - Valiant, L - Dart, R - Belvedere, W - Coronet, P - Plymouth, D - Dodge, C - Chrysler, Y - Imperial

★Indicates use as required. Numerals in parentheses ( ) refer to notes. Printed in U.S.A.

⊟Indicates parts not listed in any previous parts book. Prices and specifications subject to change without notice.

March 1966 Supersedes May 1965. * Indicates change or addition.

MyMopar.com

POWER STEERING

19-30-0 STEERING WHEEL - Cont'd

CODE	PART NAME AND DESCRIPTION	CYL	PER CAR	VALIANT / DART	PLYMOUTH BELVEDERE / DODGE CORONET	PLYMOUTH FURY / DODGE POLARA / CHRYSLER	IMPERIAL
19-30-4	WHEEL - Cont'd						
	Red, W/Three Spokes, w/o Spoke Cover, w/Trim Codes H1R, H2R, H4R, H5R, L1R, L2R, L4R, L5R, L8R, L9R, M1R, M3R, M4R, M5R, P4R, w/Models P, D, C1, C2		1	---- ---	---- ---	4001 AR7	
	Yellow Tan, w/Three Spokes, w/o Spoke Cover, w/Trim Codes H1T, H2T, H4T, H5T, L1T, L2T, L3T, L4T, L5T, L8T, M1T, M4T, M5T, w/Models P, D, C1, C2		1	---- ---	---- ---	4001 AT6	
	Yellow Tan, w/Three Spokes, w/o Spoke Cover, w/Trim Code P4T, w/Model D . . .	8	1	---- ---	---- ---	4001 AT5	
	Blue, w/Spoke Cover, w/Trim Codes L1B, L2B, L4B, L5B, L8B, L9B, M4B, P4B, w/Models C1, C2	8	1	---- ---	---- ---	4008 AB4	
	Yellow Gold, w/Spoke Cover, w/Trim Codes L2L, L4L, M4L, P4L, w/Models C1, C2 . . .	8	1	---- ---	---- ---	4008 AY3	
	Turquoise, w/Spoke Cover, w/Trim Codes L1Q, L2Q, L8Q, w/Model C1	8	1	---- ---	---- ---	4008 AQ4	
	Red, w/Spoke Cover, w/Trim Codes L1R, L2R, L4R, L5R, L8R, L9R, M3R, M4R, P3R, P4R, w/Models C1, C2	8	1	---- ---	---- ---	4008 AR7	
	Yellow Tan, w/Spoke Cover, w/Trim Codes L1T, L2T, L4T, L5T, L8T, M4T, P4T, w/Models C1, C2	8	1	---- ---	---- ---	4008 AT6	
	White, w/Spoke Cover, w/Trim Codes L1N, L2N, L4N, M1N, M4W, P4W, w/Models C1, C2	8	1	---- ---	---- ---	4020 AW3	
	White, w/o Spoke Cover, w/Trim Codes L1N, L2N, L4N, M1N, M4W, w/Models C1, C2	8	1	---- ---	---- ---	4000 AW3	
	Blue, w/Trim Codes H1B, H4B, w/Model C3.		1	---- ---	---- ---	4009 AB4	
	Yellow Gold, w/Trim Codes H1L, H4L, w/Model C3		1	---- ---	---- ---	4009 AY3	
	Turquoise, w/Trim Code H1Q, w/Model C3 .		1	---- ---	---- ---	4009 AQ4	
	Red, w/Trim Codes H1R, H4R, w/Model C3 .		1	---- ---	---- ---	4009 AR7	
	Yellow Tan, w/Trim Codes H1T, H4T, w/Model C3		1	---- ---	---- ---	4009 AT6	
	White, w/Trim Code H1N, w/Model C3		1	---- ---	---- ---	4011 AW3	
	Black, w/Trim Code H4X, w/Model C3		1	---- ---	---- ---	4011 AX9	
	Blue, w/Trim Codes M3B, M7B, M8B, M9B, M3C, M9C, H3B, H7B, H3C		1	---- ---	---- ---	---- ---	4005 ABB
	Yellow Green, w/Trim Codes M7G, M8G, H7G		1	---- ---	---- ---	---- ---	4005 AFF
	Maroon, w/Trim Codes M3K, M9K		1	---- ---	---- ---	---- ---	4005 AMM
	Gray Black, w/Trim Codes M3X, M5X, M9X, M7P, H3X, H7A, H6X, H8X		1	---- ---	---- ---	---- ---	4005 AAX
	Turquoise, w/Trim Code M7Q.		1	---- ---	---- ---	---- ---	4005 AQQ
	Red, w/Trim Codes M3R, M5R, M7R, M9R, M3V, M9V, H3R, H8R, H3V		1	---- ---	---- ---	---- ---	4005 ARR
	Orange Yellow Gold, w/Trim Codes M3T, M7T, M9T, H7T.		1	---- ---	---- ---	---- ---	4005 ALL
	White and Black, w/Trim Codes M3W, M7N, M8N, M9W, H3W, M5W, H8W		1	---- ---	---- ---	---- ---	4005 AWX

TYPE LETTERS Indicate: V - Valiant, L - Dart, R - Belvedere, W - Coronet, P - Plymouth, D - Dodge, C - Chrysler, Y - Imperial

★Indicates use as required. Numerals in parentheses ( ) refer to notes. Printed in U.S.A.

⊟Indicates parts not listed in any previous parts book. Prices and specifications subject to change without notice.

* Indicates change or addition. March 1966 Supersedes May 1965.

MyMopar.com

POWER STEERING

CODE	PART NAME AND DESCRIPTION	CYL	PER CAR	VALIANT / DART	PLYMOUTH BELVEDERE / DODGE CORONET	PLYMOUTH FURY / DODGE POLARA / CHRYSLER	IMPERIAL
19-30-0	**STEERING WHEEL - Cont'd**						
19-30-18	NUT, Steering Column Shaft, Steering Wheel . .		1	145 032	145 032	145 032	145 032
	WASHER		1	6025 671	6025 671	6025 671	6025 671
19-30-43	COVER, Steering Wheel Spoke, P.		1	---- ---	---- ---	2530 956	
19-30-44	CUSHION, Steering Wheel Spoke Cover, P . . .		2	---- ---	---- ---	2768 111	
19-31-0	**STEERING COLUMN BRACKET OR SUPPORT**						
19-31-1	BRACKET, Instrument Panel Steering Column Support, C1, C2	8	1	---- ---	---- ---	2571 001	
19-31-2	SUPPORT, w/NUTS, Instrument Panel Steering Column to Dash, P, D		1	---- ---	---- ---	2570 558	
19-31-7	BRACE, w/SCREW, Instrument Panel Steering Column Support to Windshield Lower Frame, Right		1	---- ---	2571 118		
	Left		1	---- ---	2570 185		
	w/SCREW and NUTS, Instrument Panel Steering Column		1	---- ---	---- ---	---- ---	2491 687
	Steering Column to Windshield Frame Upper.		1	---- ---	---- ---	---- ---	2217 845
19-46-0	**STEERING COLUMN GEARSHIFT TUBE**						
19-46-3	TUBE, w/Manual Trans.		1	2405 614	2461 966	2461 966	
	w/Auto. Trans., C		1	*2467 860	*2467 820	*2530 182	*2530 575
	w/Auto. Trans., w/o Tilt Wheel, P, D.		1	---- ---	---- ---	*2530 182	
	w/Auto. Trans., w/Tilt Wheel, P, D		1	---- ---	---- ---	*2533 931	
19-46-8	HOUSING, Steering Column Gearshift, w/Manual Trans., P, D.		1	2265 651	2265 651	2265 651	
	w/Auto. Trans., P, D		1	2530 240	2530 240	2467 855	
	w/Manual Trans., C1, C2-M	8	1	---- ---	---- ---	2530 227	
	w/Auto. Trans., C	8	1	---- ---	---- ---	2467 823	
			1	---- ---	---- ---	---- ---	2467 855
	SCREW		1	6026 251	6026 251	6026 251	
19-46-12	SPACER, Steering Column Gearshift Tube Lever, w/Manual Trans.		1	2265 688	2265 688	2265 688	
	w/Auto. Trans.		1	2467 863	2467 863	2467 863	2467 863
19-46-13	GROMMET, Lever Pin, w/Auto. Trans.		1	2534 279	2534 279	2534 279	2534 279
19-46-15	RETAINER, Steering Column Gearshift Lever Spring, w/Auto. Trans.		1	2467 865	2467 865	2467 865	2467 865
	WASHER		1	6024 899	6024 899	6024 899	6024 899
19-46-16	LEVER, Steering Column Gearshift Tube, First and Reverse, w/Manual Trans.		1	2405 618	2460 570	2460 570	
19-46-19	WASHER, Steering Column Gearshift Tube Lever, w/Manual Trans.		1	2265 687	2265 687		
19-46-22	PLATE, Steering Column Gearshift Tube Lever Seal, w/Auto. Trans.		1	*2530 548	*2530 548		
	w/Auto. Trans., w/o Three Holes .120" dia. Mounted on Sleeve		1	---- ---	---- ---	*2461 048	

TYPE LETTERS Indicate: V - Valiant, L - Dart, R - Belvedere, W - Coronet, P - Plymouth, D - Dodge, C - Chrysler, Y - Imperial

★Indicates use as required. Numerals in parentheses ( ) refer to notes. Printed in U.S.A.

⊟Indicates parts not listed in any previous parts book. Prices and specifications subject to change without notice.

March 1966 Supersedes May 1965. • Indicates change or addition.

MyMopar.com

POWER STEERING

19-46-0 STEERING COLUMN GEARSHIFT TUBE - Cont'd

CODE	PART NAME AND DESCRIPTION	CYL	PER CAR	VALIANT / DART	PLYMOUTH BELVEDERE / DODGE CORONET	PLYMOUTH FURY / DODGE POLARA / CHRYSLER	IMPERIAL
19-46-22	PLATE - Cont'd.						
	w/Auto. Trans., w/Three Holes .120" dia. Mounted on Sleeve		1	---- ---	---- ---	⊟2768 252	
19-46-26	SEAL, Steering Column Gearshift Tube,						
	Lever Upper, w/Auto. Trans.		1	2467 836	2467 836	2467 836	
	Lever Seal Plate, w/Auto. Trans.		1	---- ---	---- ---	2533 749	
19-46-33	SPRING, Steering Column Gearshift Tube, w/Auto. Trans. Column Shift		1	2467 864	2467 864	2467 864	2467 864
19-46-35	SPRING WASHER, Steering Column Gearshift Housing, w/Auto. Trans.		1	2461 043	2461 043	2461 043	2461 043
19-46-38	PAWL, Steering Column Gearshift Detent, w/Auto. Trans.		1	2467 830	2467 830	2467 830	2467 830
19-46-39	SPRING, Steering Column Gearshift Tube Pawl, w/Auto. Trans.		1	2467 834	2467 834	2467 834	2467 834
19-46-40	PLATE, Steering Column Gearshift Detent, w/Auto. Trans.		1	2467 835	2467 835	2467 835	2467 835
	SCREW		2	6024 060	6024 060	6024 060	6024 060
19-46-43	CLIP, Switch, w/Auto. Trans.		1	2530 191	2530 191	2530 191	
	WASHER		1	6025 254	6025 254	6025 254	
19-46-45	SLEEVE, Lever Pin, w/Auto. Trans.		1	2534 280	2534 280	2534 280	2534 280
19-46-55	SUPPORT, Steering Column Gearshift Tube Lever, w/Manual Trans. Column Shift		1	2265 689	2265 689		
	SUPPORT, Steering Column Shaft Bearing Lower, Floor Shift		1	---- ---	---- ---	2530 582	
	w/Manual Trans. Column Shift, w/Three Holes Drilled Through Support		1	---- ---	---- ---	*2460 573	
	w/Manual Trans. Column Shift, w/Six Holes Drilled Through Support		1	---- ---	---- ---	*2768 254	

19-48-0 GEARSHIFT CONTROL ROD

CODE	PART NAME AND DESCRIPTION	CYL	PER CAR	VALIANT / DART	PLYMOUTH BELVEDERE / DODGE CORONET	PLYMOUTH FURY / DODGE POLARA / CHRYSLER	IMPERIAL
19-48-1	ROD, First and Reverse, w/Manual Trans. Column Shift	6	1	2405 570			
	Model L, LHD, Export	6	1	2467 914			
		8	1	2467 914			
	w/A903 Trans.	6	1	---- ---	2409 420	2461 942	
	w/A745 Trans.		1	---- ---	2409 421	2461 943	
	Second and High, w/Manual Trans. Column Shift	6	1	2405 569			
	Model L, LHD, Export	6	1	2467 913			
		8	1	2467 913			
			1	---- ---	2409 419	2461 941	
	CLIP, Gearshift Control Rod Swivel First and Reverse, w/Manual Trans.		1	---- ---	---- ---	*6025 071	
	CLIP, Gearshift Control Rod, Second and High		1	---- ---	---- ---	*6025 071	
19-48-2	END, Gearshift Control Rod, Second and High, w/Manual Trans. Column Shift		1	2461 938			

TYPE LETTERS Indicate: V - Valiant, L - Dart, R - Belvedere, W - Coronet, P - Plymouth, D - Dodge, C - Chrysler, Y - Imperial

★Indicates use as required. Numerals in parentheses ( ) refer to notes. Printed in U.S.A.

⊟Indicates parts not listed in any previous parts book. Prices and specifications subject to change without notice.

* Indicates change or addition. March 1966 Supersedes May 1965.

MyMopar.com

POWER STEERING

19-48-0 GEARSHIFT CONTROL ROD - Cont'd

CODE	PART NAME AND DESCRIPTION	CYL	PER CAR	VALIANT / DART	PLYMOUTH BELVEDERE / DODGE CORONET	PLYMOUTH FURY / DODGE POLARA / CHRYSLER	IMPERIAL
19-48-7	SMALL PARTS PACKAGE, Gearshift Control, w/Manual Trans. Column Shift		1	2421 772			
	w/Manual Trans. A903 and A745, w/Grommets in Trans. Levers		1	---- ---	2421 770	2421 770	
	w/Manual Trans. A745, w/o Grommets in Trans. Levers		1	---- ---	*2421 771	*2421 771	
19-48-12	CLAMP, Gearshift Control Rod First and Reverse, w/Manual Trans. Column Shift		1	2204 274	2204 274		
	Gearshift Control Rod Swivel Second and High, w/Manual Trans. Column Shift		1	---- ---	---- ---	2204 274	
19-48-16	SWIVEL, Gearshift Control Rod First and Reverse, w/Manual Trans. Column Shift		1	2208 155	2208 155	2074 521	
	Second and High, w/Manual Trans. Column Shift		1	---- ---	2074 521	2208 155	
19-48-21	WASHER, Gearshift Control Rod Swivel First and Reverse, w/Manual Trans. A745, w/o Grommets in Trans. Levers		2	---- ---	1533 190	1533 190	
19-48-23	CLIP, Gearshift Control Rod Anti-Rattle, w/Manual Trans. Column Shift		★	2405 205	2405 205	2405 205	
	CLIP, Gearshift Control Rod Swivel, First and Reverse, w/Manual Trans.		1	1137 669	1137 669		
	Second and High, w/Manual Trans.		1	1137 669	1137 669		
	CLIP, Gearshift Control Rod, w/Four Speed Trans.		3	1137 669	1137 669	1137 669	
19-48-45	SHAFT, Gearshift Control Torque, w/Manual Trans. A903	6	1	---- ---	2409 422	2461 936	
	w/Manual Trans. A745		1	---- ---	2409 423	2461 934	
	WASHER, Plain, w/Manual Trans.		2		*6023 085	*6023 085	
	WASHER, Spring, w/Manual Trans.		1		*6023 086	*6023 086	
19-48-46	BRACKET, Gearshift Control Torque Shaft Frame, w/Manual Trans. Column Shift		1	---- ---	2208 156	2461 944	
19-48-48	PLATE, Gearshift Control Torque Shaft Bracket Mounting, w/Manual Trans. Column Shift		1	---- ---	---- ---	2467 946	
19-48-49	GROMMET, Gearshift Control Torque Shaft Frame Bracket, w/Manual Trans. Column Shift		1	---- ---	2208 158	2208 158	
	Gearshift Control Torque Shaft Lever, w/Manual Trans. Column Shift		1	---- ---	1941 699	1941 699	
19-48-50	BUSHING, Gearshift Control Torque Shaft Frame Bracket Grommet, w/Manual Trans. Column Shift		1	---- ---	2208 159	2208 159	
19-48-51	SPACER, Gearshift Control Torque Shaft, w/Manual Trans. Column Shift		2	---- ---	2208 172	2208 172	
19-48-52	RETAINER, Gearshift Control Torque Shaft, w/Manual Trans. Column Shift		1	---- ---	1671 569	1671 569	

TYPE LETTERS Indicate: V - Valiant, L - Dart, R - Belvedere, W - Coronet, P - Plymouth, D - Dodge, C - Chrysler, Y - Imperial

★Indicates use as required. Numerals in parentheses ( ) refer to notes. Printed in U.S.A.

⊟Indicates parts not listed in any previous parts book. Prices and specifications subject to change without notice.

March 1966 Supersedes May 1965. * Indicates change or addition.

MyMopar.com

POWER STEERING

CODE	PART NAME AND DESCRIPTION	CYL	PER CAR	VALIANT / DART	PLYMOUTH BELVEDERE / DODGE CORONET	PLYMOUTH FURY / DODGE POLARA / CHRYSLER	IMPERIAL
19-54-0	**POWER STEERING OIL PUMP**						
19-54-2	PUMP PACKAGE, w/Oil Reservoir, 4 5/8" dia., P, D		1	2495 057	2495 057	2495 057	
	w/Oil Reservoir, 5 1/8" dia.	8	1	---- ---	---- ---	2196 082	2196 082
19-54-55	SEAL PACKAGE, Pump, 4 5/8" Reservoir, P,D		1	2495 054	2495 054	2495 054	
	5 1/8" Reservoir	8	1	---- ---	---- ---	2279 998	2279 998
19-54-60	FILTER, Pump		1	1851 957	1851 957	1851 957	1851 957
19-54-86	PULLEY, Power Steering Pump, w/o Air Conditioning, P1	6	1	2128 578	2128 578	2128 578	
	w/o Air Conditioning, w/A727 Auto. Trans.	6	1	---- ---	2202 851		
	w/Air Conditioning	6	1	2268 665			
	w/273 and 318 cu. in. Eng., w/Oil Pump Reservoir 4 5/8", P2, D2	8	1	1733 488	1733 488	1733 488	
	w/o Air Conditioning, w/361, 383, 426 cu. in. Eng., w/Oil Pump Reservoir 4 5/8", P2	8	1	---- ---	1826 056	1826 056	
	w/Air Conditioning and w/Trailer Towing Package, w/361, 383, 426 cu. in. Eng.	8	1	---- ---	1851 732		
	w/o Air Conditioning, w/318 cu. in. Eng., w/Oil Pump Reservoir 5 1/8" P2, D2	8	1	---- ---	---- ---	2206 193	
	w/o Air Conditioning, w/383, 413, 426 cu.in. Eng., w/Oil Pump Reservoir 5 1/8"	8	1	---- ---	---- ---	2128 337	2128 337
	w/Air Conditioning and w/Trailer Towing Package, w/383, 413, 426 cu. in. Eng., w/Oil Pump Reservoir 5 1/8"	8	1	---- ---	---- ---	2128 338	
19-54-91	STRAP, Power Steering Pump Bracket to Water Pump Body, w/o Air Conditioning	6	1	2402 284			
	w/Air Conditioning	6	1	2268 766			
	w/o Air Conditioning, Police and Taxi, w/A727 Auto. Trans.	6	1	---- ---	2268 766		
19-54-115	BRACKET, Power Steering Pump Engine, w/o Air Conditioning, P1	6	1	2465 894	2465 894	2468 804	
	w/Air Conditioning, P1	6	1	*2468 011	*2465 894	*2468 804	
	w/o Air Conditioning, Police and Taxi, w/A727 Auto. Trans.	6	1	---- ---	2468 011		
	BRACKET, Power Steering Pump, w/o Air Conditioning	6	1	2205 521	2205 521		
	w/Air Conditioning	6	1	2129 916			
	w/o Air Conditioning, w/A727 Auto. Trans.	6	1	---- ---	2129 916		
	Front, P1	6	1	---- ---	---- ---	2532 408	
	Rear, P1	6	1	---- ---	---- ---	2532 409	
	Front, w/o Air Conditioning, w/273 and 318 cu. in. Eng., w/Oil Pump Reservoir 4 5/8", P2	8	1	1945 384	1945 384	1945 384	
	SCREW, w/WASHER, Bracket Adjusting	8	1	---- ---	6024 810	6024 810	6024 810
	Rear, w/273 and 318 cu. in. Eng., w/Oil Pump Reservoir, 4 5/8", P2, D2	8	1	*1851 314	*1851 314	*1851 314	
	Front, w/o Air Conditioning, w/361, 383, 426 cu. in. Eng., w/Oil Pump Reservoir 4 5/8", P2	8	1	---- ---	1826 058	1826 058	

TYPE LETTERS Indicate: V - Valiant, L - Dart, R - Belvedere, W - Coronet, P - Plymouth, D - Dodge, C - Chrysler, Y - Imperial

★Indicates use as required. Numerals in parentheses ( ) refer to notes. Printed in U.S.A.

⊟Indicates parts not listed in any previous parts book. Prices and specifications subject to change without notice.

* Indicates change or addition. March 1966 Supersedes May 1965.

MyMopar.com

POWER STEERING

19-54-0 POWER STEERING OIL PUMP - Cont'd

CODE	PART NAME AND DESCRIPTION	CYL	PER CAR	VALIANT / DART	PLYMOUTH BELVEDERE / DODGE CORONET	PLYMOUTH FURY / DODGE POLARA / CHRYSLER	IMPERIAL
19-54-115	BRACKET - Cont'd.						
	Rear, w/o Air Conditioning, w/361, 383, 426 cu. in. Eng., w/Oil Pump Reservoir 4 5/8", P2	8	1	---- ---	1826 057	1826 057	
	Front, w/o Air Conditioning, w/318 cu. in. Eng., w/Oil Pump Reservoir 5 1/8", P2, D2	8	1	---- ---	---- ---	2206 191	
	Rear, w/o Air Conditioning, w/318 cu. in. Eng., w/Oil Pump Reservoir 5 1/8", P2, D2	8	1	---- ---	---- ---	2206 192	
	BRACKET, Power Steering Pump, w/383, 413, 426 cu. in. Eng., w/Oil Pump Reservoir 5 1/8"	8	1	---- ---	---- ---	2128 323	2128 323
	BRACKET, Power Steering Pump Adjusting, w/383, 413, 426 cu. in. Eng., w/Oil Pump Reservoir 5 1/8"	8	1	---- ---	---- ---	2128 324	2128 324
19-54-121	NUT, Pump Insert, w/Oil Pump Reservoir 4 5/8", P, D		1	2127 189	2127 189	2127 189	
	NUT, Pump Front Insert, w/Oil Pump Reservoir 5 1/8"	8	1	---- ---	---- ---	2120 012	
19-54-123	BOLT, Pump Engine Bracket Swivel	6	1	---- ---	2402 285		
	w/o Air Conditioning	6	1	2402 285			
	w/Air Conditioning	6	1	2202 850			
	w/o Air Conditioning, w/A727 Auto. Trans., Police and Taxi	6	1	---- ---	2202 850		
	SCREW, w/WASHER, Pump Bracket Adjusting, w/A727 Auto. Trans., Police and Taxi	6	2	---- ---	1945 404		
	BOLT, Pump Mounting Bracket Swivel, w/Oil Pump Reservoir 5 1/8"	8	1	---- ---	---- ---	6025 795	6025 795
19-54-126	OIL SEAL, Pump Flow Control Valve Bore, w/Oil Pump Reservoir 4 5/8", P, D		2	2120 017	2120 017	2120 017	
	w/Oil Pump Reservoir 5 1/8"		1	---- ---	---- ---	2120 017	2120 017
19-54-130	SNAP RING, Pump Flow Control Valve, w/Oil Pump Reservoir 4 5/8", P, D		2	1738 678	1738 678	1738 678	
	w/Oil Pump Reservoir 5 1/8"		1	---- ---	---- ---	1738 678	1738 678
19-54-131	BUMPER, Pump Bracket, w/Oil Pump Reservoir 5 1/8"	8	1	---- ---	---- ---	1940 147	1940 147
19-54-132	NUT, Pump Engine Bracket Swivel Bolt	6	1	2129 684	2129 684		
	Pump Mounting Bracket Swivel Bolt, w/Oil Pump Reservoir 5 1/8"	8	1	---- ---	---- ---	2129 684	2129 684
19-54-133	PLATE, Pump Engine Bracket, w/Air Conditioning	6	1	---- ---	2264 872	2264 872	
19-54-180	RESERVOIR, w/FILLER, Pump Oil, 4 5/8" dia., P, D		1	2267 663	2267 663	2267 663	
	5 1/8" dia.		1	---- ---	---- ---	2267 666	2267 666
19-54-181	OIL SEAL, Pump Oil Reservoir, w/Oil Pump Reservoir 4 5/8", P, D.		1	1732 946	1732 946	1732 946	
	w/Oil Pump Reservoir 5 1/8"	8	1	---- ---	---- ---	2120 018	2120 018
	SEAL, Pump Oil Reservoir Mounting, w/Oil Pump Reservoir 4 5/8", P, D		1	2127 486	2127 486	2127 486	

TYPE LETTERS indicate: V - Valiant, L - Dart, R - Belvedere, W - Coronet, P - Plymouth, D - Dodge, C - Chrysler, Y - Imperial

★Indicates use as required. Numerals in parentheses ( ) refer to notes. Printed in U.S.A.
⊟Indicates parts not listed in any previous parts book. Prices and specifications subject to change without notice.
March 1966 Supersedes May 1965. ✱ Indicates change or addition.

MyMopar.com

POWER STEERING

19-54-0 POWER STEERING OIL PUMP - Cont'd

CODE	PART NAME AND DESCRIPTION	CYL	PER CAR	VALIANT / DART	PLYMOUTH BELVEDERE / DODGE CORONET	PLYMOUTH FURY / DODGE POLARA / CHRYSLER	IMPERIAL
19-54-182	CAP, Pump Oil Reservoir Filler		1	2267 694	2267 694	2267 694	2267 694
19-54-188	SEAT, Pump Outlet		1	1738 683	1738 683	1738 683	1738 683
19-54-196	COOLER, Pump Oil, w/Air Conditioning, w/383, 413, 426 cu. in. Eng.	8	1	---- ---	---- ---	2267 616	2267 616
19-54-197	BRACKET, Pump Oil Cooler, w/Air Conditioning and w/383, 413, 426 cu. in. Eng.	8	1	---- ---	---- ---	2267 674	2267 674
19-54-198	CLAMP, Pump Oil Cooler, w/Air Conditioning and w/383, 413, 426 cu. in. Eng.	8	1	---- ---	---- ---	2267 643	2267 643
	CLIP, Pump Oil Cooler, w/Air Conditioning and w/383, 413, 426 cu. in. Eng.	8	1	---- ---	---- ---	2267 623	2267 623
	NUT, Oil Cooler Clip		1	---- ---	---- ---	---- ---	6023 169
	WASHER, Oil Cooler Clip		1	---- ---	---- ---	---- ---	6022 188
19-54-219	PLUG, Pump Flow Control Valve Bore, w/Inside .38" dia., w/Oil Pump Reservoir 4 5/8" dia., P, D		2	*2120 016	*2120 016	*2120 016	
	w/Inside .45" dia., w/Oil Pump Resevoir 4 5/8" dia.		1	*2537 013	*2537 013	*2537 013	
19-54-228	SPRING REPAIR PACKAGE, Pump Rotor Slipper, w/Oil Pump Reservoir 4 5/8" dia., P, D		1	2495 053	2495 053	2495 053	
	w/Oil Pump Reservoir 5 1/8" dia.	8	1	---- ---	---- ---	2448 097	2448 097
19-54-246	VALVE, Pump Pressure Relief (stamped w/symbol □ on body and has male cap)	6	1	2537 014			
	(stamped 800 P. S. I. on cap and has female cap)	6	1	2537 051			
	(stamped w/symbol ✿ on body and has male cap	8	1	2537 015			
	(stamped 950 P. S. I. on cap and has female cap)	8	1	2537 052			
	w/Oil Pump Reservoir, 4 5/8" dia., (stamped w/symbol ✿ on body and has male cap) P, D		1	---- ---	2537 015	2537 015	
	w/Oil Pump Reservoir, 4 5/8" dia., (stamped 950 P. S. I. on cap and has female cap) P, D		1	---- ---	2537 052	2537 052	
	w/Oil Pump Reservoir, 5 1/8" dia., (stamped w/symbol □ on body of valve) w/318 cu. in. Eng., P, D	8	1	---- ---	---- ---	2129 019	
	w/Oil Pump Reservoir, 5 1/8" dia. (stamped w/symbol ▲ on body of valve) w/383, 413, 426 cu. in. Eng.	8	1	---- ---	---- ---	2121 600	
	(stamped 1000 P. S. I. on cap and has female cap)		★	---- ---	---- ---	2537 053	
			1	---- ---	---- ---	---- ---	1944 792
19-54-248	GASKET, Pump Pressure Relief Valve		1	1852 920	1852 920	1852 920	1852 920
19-54-258	OIL SEAL, Power Steering Pump Front Insert, w/Oil Pump Resevoir 4 5/8" dia., P, D		1	*1732 948	*1732 948	*1732 948	
	w/Oil Pump Resevoir 5 1/8" dia.			---- ---	---- ---	*2128 275	*2128 275

19-56-0 POWER STEERING GEAR PISTON

19-56-6	RING, Steering Gear Piston		1	1822 672	1822 672	1822 672	1822 672
	"O" RING, Steering Gear Piston Ring		1	1822 671	1822 671	1822 671	1822 671
19-56-22	"O" RING, Steering Gear Cylinder Head Ferrule		1	*1486 205	*1486 205	*1486 205	*1486 205

TYPE LETTERS Indicate: V - Valiant, L - Dart, R - Belvedere, W - Coronet, P - Plymouth, D - Dodge, C - Chrysler, Y - Imperial

★Indicates use as required. Numerals in parentheses ( ) refer to notes. Printed in U.S.A.

⊟Indicates parts not listed in any previous parts book. Prices and specifications subject to change without notice.

* Indicates change or addition.

MyMopar.com

March 1966 Supersedes May 1965.

POWER STEERING

CODE	PART NAME AND DESCRIPTION	CYL	PER CAR	VALIANT / DART	PLYMOUTH BELVEDERE / DODGE CORONET	PLYMOUTH FURY / DODGE POLARA / CHRYSLER	IMPERIAL
19-56-0	**POWER STEERING GEAR PISTON**						
19-56-83	SPRING, Steering Gear Pressure Control Valve Lower		1	1822 442	1822 442	1822 442	1822 442
19-56-90	"O" RING, Gear Pressure Control Valve		1	1536 268	1536 268	1536 268	1536 268
19-57-0	**POWER STEERING GEAR VALVES**						
19-57-1	SEAL PACKAGE		1	2279 985	2279 985	2279 985	2279 985
19-57-2	PISTON and SPRING PACKAGE, Steering Gear Pressure Control Valve		1	1879 509	1879 509	1879 509	1879 509
19-57-3	VALVE, Steering Gear	6	1	2267 617			
		8	1	2267 620	---- ---	---- ---	2267 618
			1	---- ---	2267 617	2267 617	
19-57-13	"O" RING, Steering Gear Valve Housing		1	1733 612	1733 612	1733 612	1733 612
19-57-16	GASKET, Steering Gear Valve Plug		1	1733 724	1733 724	1733 724	1733 724
19-57-63	LEVER, Steering Gear Valve		1	1822 380	1822 380	1822 380	1822 380
19-57-64	SPRING, Steering Gear Valve Lever		1	1823 151	1823 151	1823 151	1823 151
19-58-0	**POWER STEERING HOSE**						
19-58-7	HOSE, Pump Pressure	6	1	2127 507	2127 507		
		8	1	2267 598	2127 517		
			1	---- ---	---- ---	2127 507	2127 267
19-58-9	SLEEVE, Pump Pressure Hose	6	1	2267 679			
		8	1	2267 679	2267 679	2537 534	2267 679
	At Battery Tray		1	---- ---	---- ---	---- ---	2267 644
	SLEEVE, Pump Return Hose, w/Air Conditioning	8	1	---- ---	2127 280	2127 280	
19-58-14	HOSE, Pump Return, w/o Air Conditioning	6	1	2200 560			
	w/Air Conditioning	6	1	1636 067			
		6	1	---- ---	1636 067		
	42 1/4" long	6	1	---- ---	---- ---	2200 560	
	Preformed	6	1	---- ---	---- ---	2537 531	
		8	1	2267 601	2127 524	2127 524	2127 376
	Power Steering Pump to Oil Cooler, 30 1/2" long, w/Air Conditioning	8	1	---- ---	---- ---	*2200 560	
	Power Steering Pump Gear to Oil Cooler, w/Air Conditioning, w/383, 413 and 426 cu. in. Eng.	8	1	---- ---	---- ---	*2537 600	*2267 696
	Pump Oil Cooler to Pump Return, w/Air Conditioning		1	---- ---	---- ---	2267 537	2267 699
19-58-15	ADAPTER, Steering Gear Pressure Hose	6	1	1618 610			
		8	1	2267 528			
			1	---- ---	1618 610	1618 610	1618 610
19-58-18	"O" RING, Gear Pressure Hose Adapter	8	1	2267 530			
19-58-21	NUT, Gear Pressure Hose Adapter	8	1	2267 529			
19-58-25	CLAMP, Pump Return Hose		2	870 469	870 469	870 469	870 469
	Pump Oil Cooler Hose, w/Air Conditioning		4	---- ---	---- ---	870 469	870 469
19-58-31	GASKET, Steering Gear Pressure Hose Adapter	6	1	1618 611			
			1	---- ---	1618 611	1618 611	1618 611

TYPE LETTERS Indicate: V - Valiant, L - Dart, R - Belvedere, W - Coronet, P - Plymouth, D - Dodge, C - Chrysler, Y - Imperial

★Indicates use as required. Numerals in parentheses ( ) refer to notes. Printed in U.S.A.

⊟Indicates parts not listed in any previous parts book. Prices and specifications subject to change without notice.

March 1966 Supersedes May 1965. * Indicates change or addition.

MyMopar.com

GROUP 21 - TRANSMISSION

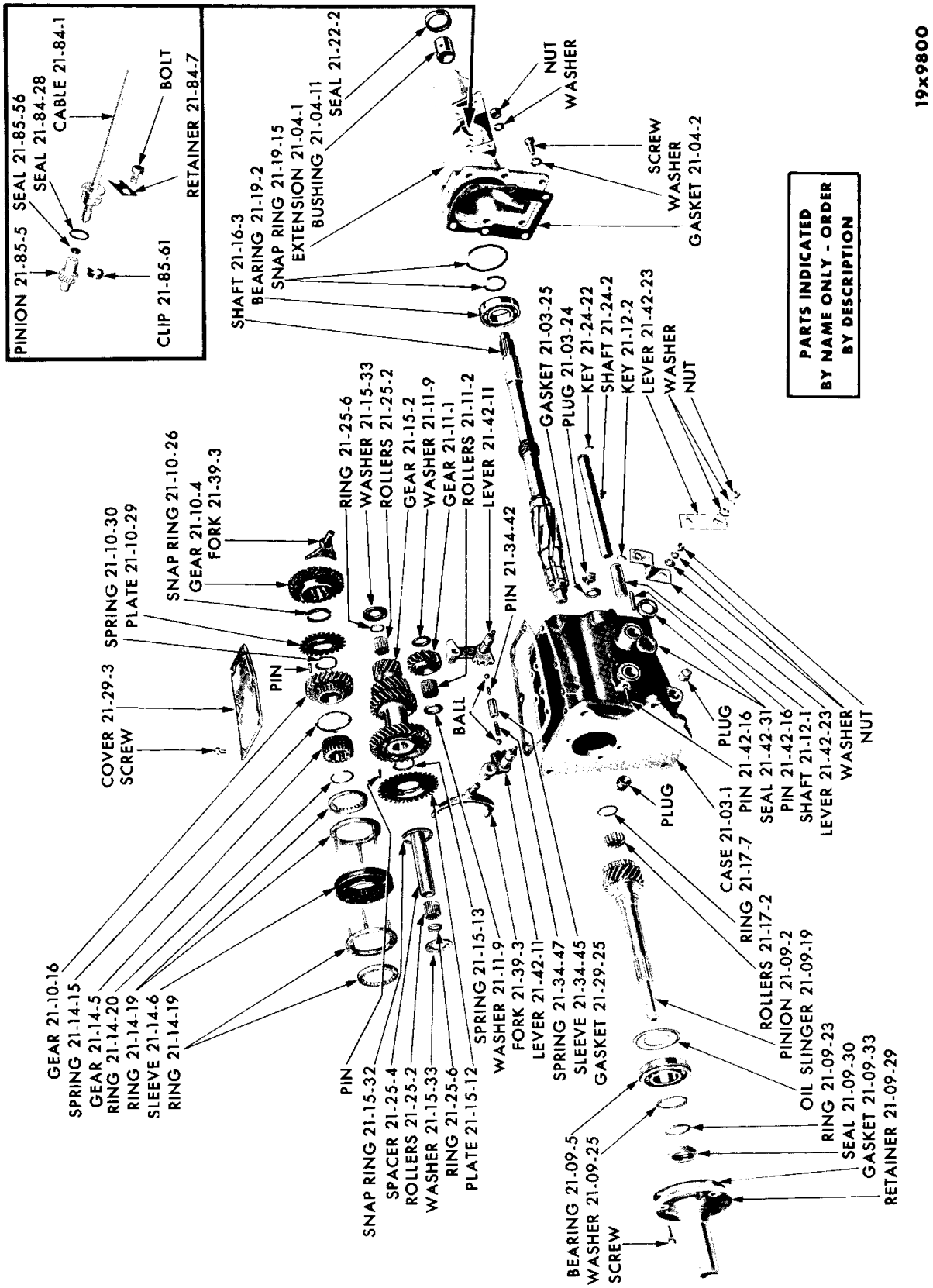

MyMopar.com

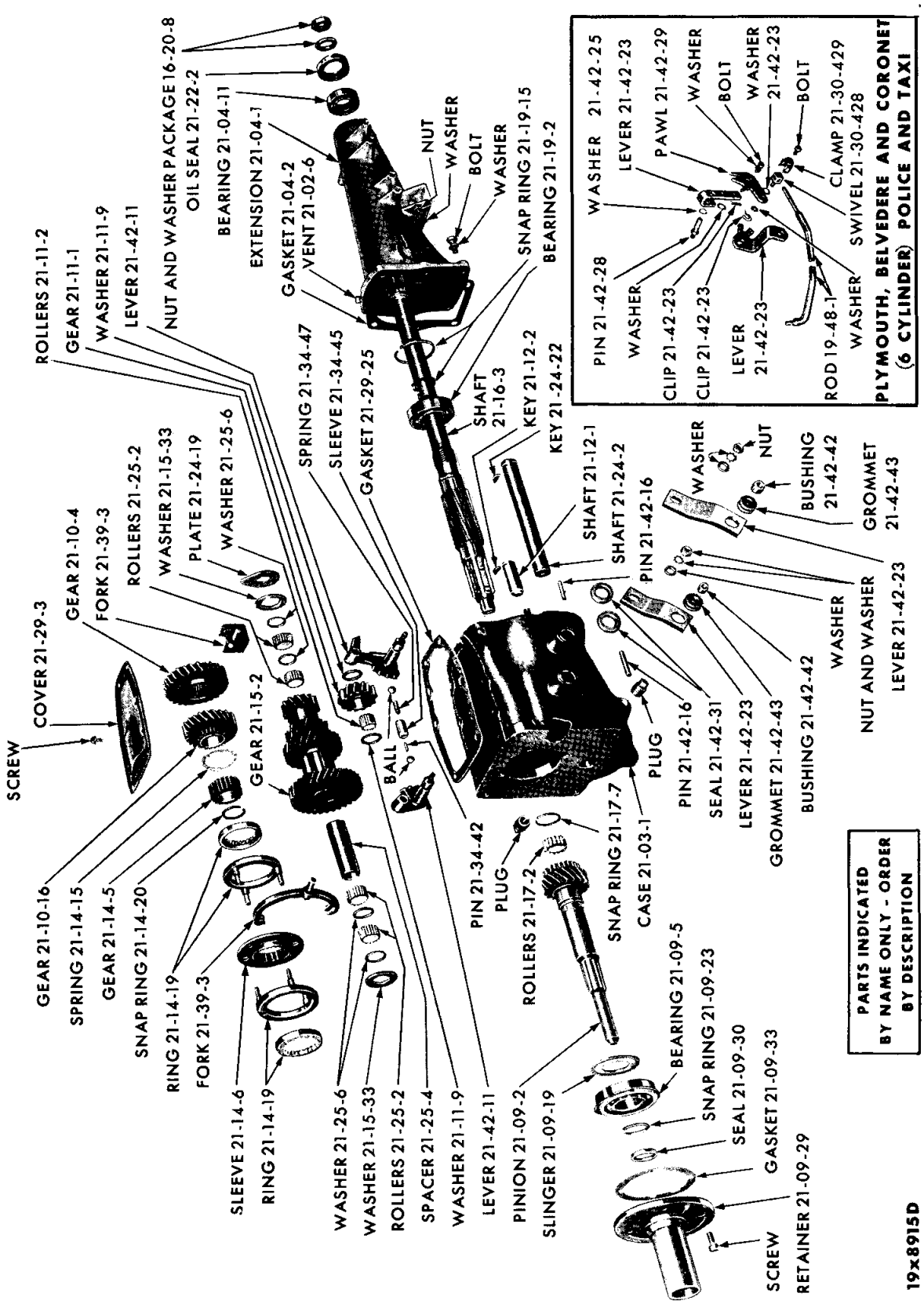

MANUAL 3-SPEED TRANSMISSION - VALIANT V2, DART L2, BELVEDERE R2, PLYMOUTH P2, CORONET W2, DODGE D2, CHRYSLER C1-2; BELVEDERE R1, PLYMOUTH P1, CORONET W1, POLICE AND TAXI (A745)

MyMopar.com

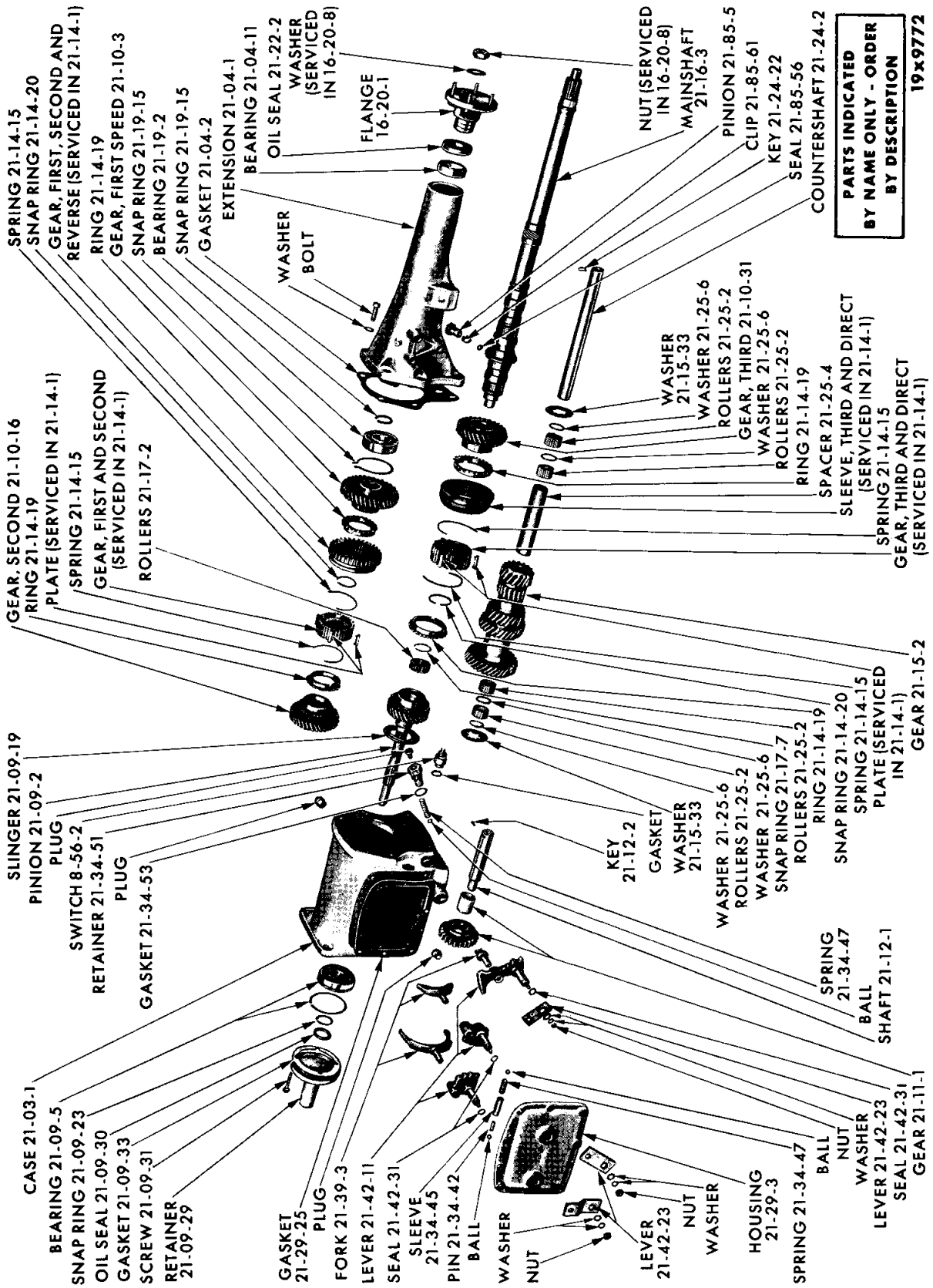

MANUAL 4-SPEED TRANSMISSION - VALIANT V1-2, DART L1-2, BELVEDERE R2, PLYMOUTH P2, CORONET W2, DODGE D2 AND CHRYSLER C1-2

MyMopar.com

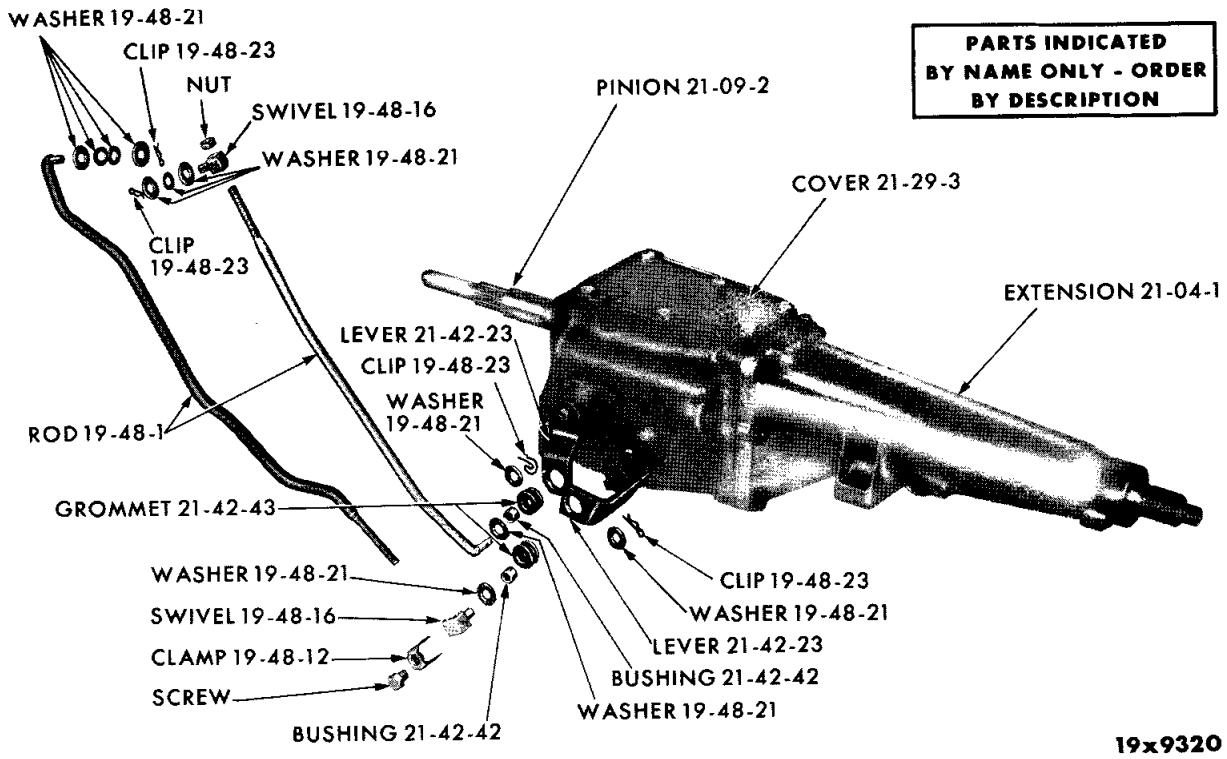

GEARSHIFT CONTROLS (MANUAL TRANSMISSION) - VALIANT AND DART

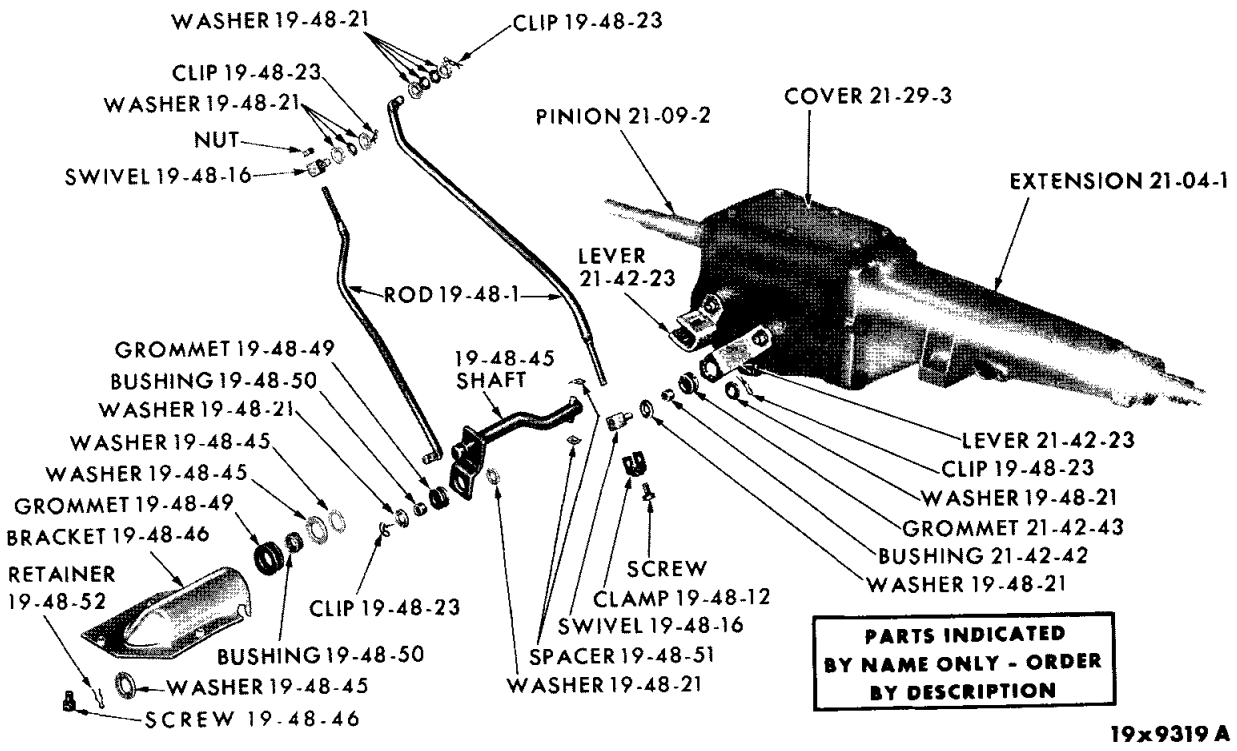

GEARSHIFT CONTROLS (3-SPEED MANUAL TRANSMISSION) - BELVEDERE, PLYMOUTH, CORONET, DODGE AND CHRYSLER C1-2

MyMopar.com

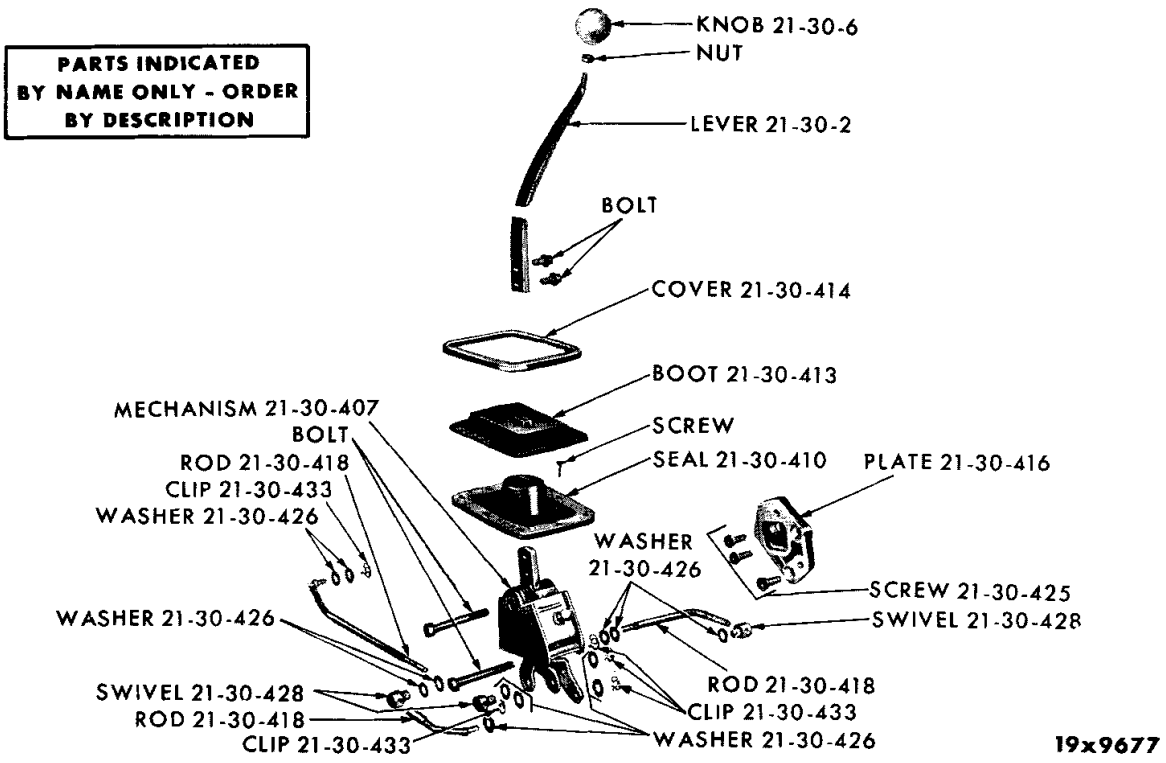

MANUAL 4 SPEED TRANSMISSION GEARSHIFT CONTROLS

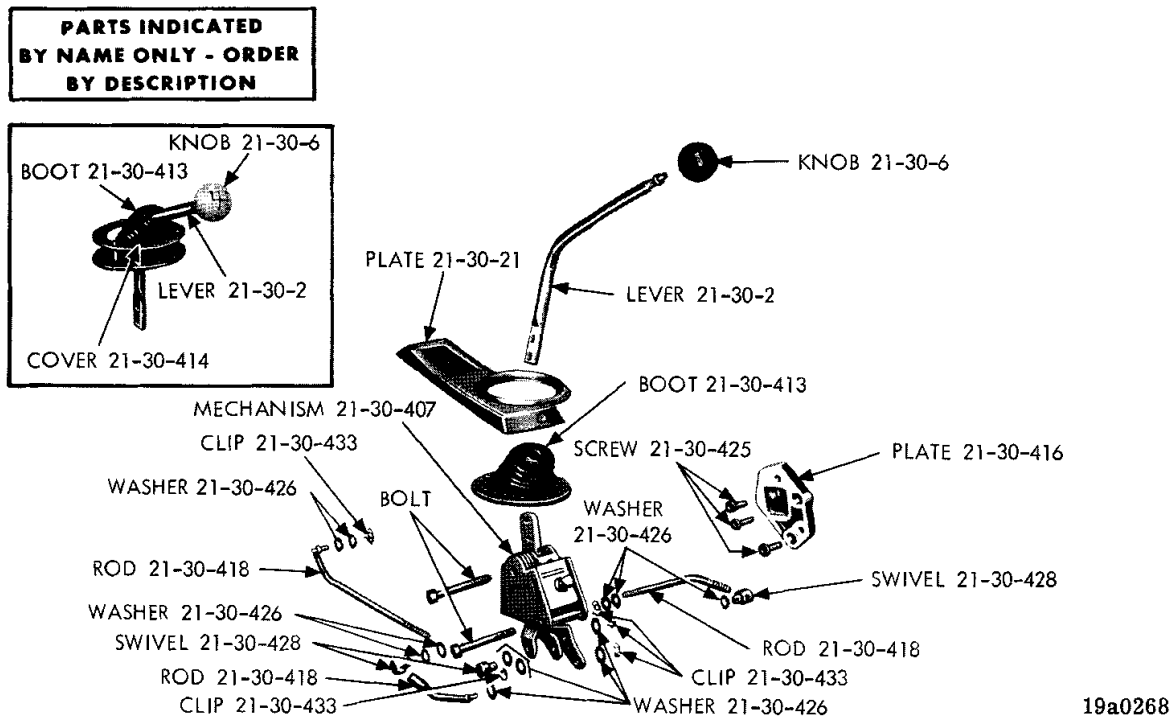

MANUAL 4 SPEED TRANSMISSION GEARSHIFT CONTROLS (WITH AND WITHOUT BUCKET SEATS)

MyMopar.com

NOTES

MyMopar.com

MANUAL TRANSMISSION

21-02-0 TRANSMISSION

NOTE: For Transmission Component Parts see Charts Beginning on Page 21-11.

CODE	PART NAME AND DESCRIPTION	CYL	PER CAR	VALIANT / DART	PLYMOUTH BELVEDERE / DODGE CORONET	PLYMOUTH FURY / DODGE POLARA / CHRYSLER	IMPERIAL
21-02-1	TRANSMISSION, w/170 cu. in. Engine, A903 (Cancelled-Service Component Parts)	6	1	2464 589			
	w/170 cu. in. Engine, A903	6	1	2466 160			
	w/170 cu. in. Engine, Export, LHD., A833 4 Speed	6	1	2464 262			
	w/225 cu. in. Engine, A903 (Cancelled-Service Component Parts)	6	1	2464 590			
	w/225 cu. in. Engine, A903	6	1	2466 161			
	L1, w/225 cu. in. Engine, Export, LHD., A745	6	1	2466 085			
	A745	8	1	2466 085			
	V1, L1, w/225 cu. in. Engine, V2, L2, w/273 cu. in. Engine, A833 4 Speed		1	2464 262			
	P, A903 (Cancelled-Service Component Parts).	6	1	---- ---	2464 592	2464 592	
	P, A903	6	1	---- ---	2466 163	2466 163	
	w/273 and 318 cu. in. Engine, A745	8	1	---- ---	2464 094		
	P, D2-L, w/318 cu. in. Engine, A745	8	1	---- ---	---- ---	2464 094	
	Police and Taxi, A745	6	1	---- ---	2464 094	2464 094	
	w/361 and 383 cu. in. Engine, A745	8	1	---- ---	2464 098		
	P, D, C1, w/383 cu. in. Engine, A745	8	1	---- ---	---- ---	2464 098	
	C2-M w/413 cu. in. Engine, A745	8	1	---- ---	---- ---	2464 098	
	w/361, 383 and 426 Std. cu. in. Engine, A833 4 Speed	8	1	---- ---	2464 641(1)		
	P, D, w/383 and 426 Std., cu. in. Engine, C1 w/361 and 383 cu. in. Engine, C2 w/383 and 413 cu. in. Engine, A833 4 Speed	8	1	---- ---	---- ---	2464 261	

21-30-0 TRANSMISSION GEARSHIFT LEVER AND RODS

21-30-2	LEVER, Column Shift, w/3 Speed Trans.		1	2530 198	2530 198	2530 198	
	w/4 Speed Trans.		1	2405 567			
	w/o Console, w/4 Speed Trans.	8	1	---- ---	2461 949		
	w/Console, w/4 Speed Trans.	8	1	---- ---	2467 911		
	w/o Console, w/4 Speed Trans.	8	1	---- ---	---- ---	2467 915	
	w/Console, w/4 Speed Trans.	8	1	---- ---	---- ---	2467 921	
21-30-5	INSULATOR, Lever, w/3 Speed Trans.		1	2530 249	2530 249	2530 249	
21-30-6	KNOB, Lever, w/o Floor Trim Plate, w/4 Speed Trans., White		1	*2409 413			
	KNOB PACKAGE, w/NUT, w/Floor Trim Plate, w/4 Speed Trans.		1	⊟2585 565			
	KNOB, w/4 Speed Trans., White	8	1	---- ---	*2409 413	*2409 413	
	Column Shift, w/3 Speed Trans., Plastic, Chromed		1	2530 184	2530 184	2530 184	
	Die Cast, Chromed		1	2530 828	2530 828	2530 828	
	NUT, Lever Knob Jam		1	124 925	124 925	124 925	
21-30-7	RING, Lever Insulator, w/3 Speed Trans.		1	2530 199	2530 199	2530 199	
21-30-15	LENS, Instrument Panel, D, w/o Shift Letters P, R, N, D, 2, 1		1	---- ---	---- ---	*2571 081	

NOTE 1: See Transmission Chart 2464641 for Parts Peculiar to 426 cu. in. Engine Hemispherical, Production Transmission Number 2538347.

TYPE LETTERS Indicate: V - Valiant, L - Dart, R - Belvedere, W - Coronet, P - Plymouth, D - Dodge, C - Chrysler, Y - Imperial

★Indicates use as required. Numerals in parentheses ( ) refer to notes. Printed in U.S.A.

⊟Indicates parts not listed in any previous parts book. Prices and specifications subject to change without notice.

● Indicates change or addition. March 1966 Supersedes May 1965.

MyMopar.com

MANUAL TRANSMISSION

21-30-0 TRANSMISSION GEARSHIFT LEVER AND RODS - Cont'd

CODE	PART NAME AND DESCRIPTION	CYL	PER CAR	VALIANT / DART	PLYMOUTH BELVEDERE / DODGE CORONET	PLYMOUTH FURY / DODGE POLARA / CHRYSLER	IMPERIAL
21-30-19	COVER, Gearshift Indicator Opening, P, w/o Shift Letters P, R, N, D, 2, 1		1	---- ---	---- ---	*2587 807	
21-30-21	PLATE, Gearshift Cover, w/4 Speed Trans., w/Shift Letters R, 1, 2, 3, 4, w/Bucket Seats, Chrome		1	*2581 212			
21-30-22	PIN, Lever		1	273 503	273 503	273 503	
21-30-407	MECHANISM, Gearshift Control, w/4 Speed Trans.		1	2461 946			
	w/4 Speed Trans.	8	1	---- ---	2461 947	2461 947	
21-30-410	SEAL, Control Lever Boot, w/4 Speed Trans.	8	1	---- ---	2405 559	2405 559	
21-30-413	BOOT, Control Lever, w/4 Speed Trans., 5" O.D. at Base		1	2405 550			
	w/4 Speed Trans., w/o Console	8	1	---- ---	2405 552	2405 552	
	w/4 Speed Trans., w/Console	8	1	---- ---	2405 561	2405 561	
21-30-414	COVER or RING, Boot, w/4 Speed Trans., w/o Console, Chrome		1	2461 069			
	w/4 Speed Trans., w/o Console	8	1	---- ---	2405 496	2405 496	
21-30-416	PLATE, Mechanism Mounting, w/4 Speed Trans.		1	2461 060			
	w/4 Speed Trans.	8	1	---- ---	2461 065	2461 065	
21-30-418	ROD, Gearshift Control, First and Second, w/4 Speed Trans.		1	2461 062			
	Third and Fourth, w/4 Speed Trans.		1	2461 061			
	Reverse, w/4 Speed Trans.		1	2461 063			
	First and Second, w/4 Speed Trans.	8	1	---- ---	2461 067	2461 067	
	Third and Fourth, w/4 Speed Trans.	8	1	---- ---	2461 066	2461 066	
	Reverse, w/4 Speed Trans.	8	1	---- ---	2461 068	2461 068	
21-30-425	SCREW, Mechanism Mounting Plate, w/4 Speed Trans., 1 1/4" lgh.		2	6024 554	6024 554	6024 554	
	w/4 Speed Trans., 1" lgh.		1	6024 552	6024 552	6024 552	
21-30-426	WASHER, Control Rod, Plain		★	* 631 217	* 631 217	* 631 217	
	Control Rod Swivel		★	632 258	632 258	632 258	
21-30-428	SWIVEL, Rod, w/4 Speed Trans.		3	2409 408	2409 408	2409 408	
	w/3 Speed Trans.		1	---- ---	---- ---	*2074 521	
	Interlock, R, W, P, Police and Taxi	6	1	---- ---	2404 859	2404 859	
21-30-429	CLAMP, Interlock, R, W, P, Police and Taxi	6	1	---- ---	2204 274	2204 274	
21-30-433	CLIP, Rod, w/4 Speed Trans.		★	1137 669	1137 669	1137 669	

21-84-0 TRANSMISSION SPEEDOMETER CABLE ASSEMBLY

21-84-1	CABLE, w/HOUSING		1	2426 163			
	Steel Case		1	---- ---	*2496 291	*2496 291	
	Plastic Case		1	---- ---	---- ---	⊟2661 456	⊟2661 456
	GROMMET, Dash		1	1370 460	2216 552	2216 552	2216 552

TYPE LETTERS Indicate: V - Valiant, L - Dart, R - Belvedere, W - Coronet, P - Plymouth, D - Dodge, C - Chrysler, Y - Imperial

★Indicates use as required. Numerals in parentheses ( ) refer to notes. Printed in U.S.A.

⊟Indicates parts not listed in any previous parts book. Prices and specifications subject to change without notice.

March 1966 Supersedes May 1965. * Indicates change or addition.

MyMopar.com

MANUAL TRANSMISSION

21-84-0 TRANSMISSION SPEEDOMETER CABLE ASSEMBLY - Cont'd

CODE	PART NAME AND DESCRIPTION	CYL	PER CAR	VALIANT / DART	PLYMOUTH BELVEDERE / DODGE CORONET	PLYMOUTH FURY / DODGE POLARA / CHRYSLER	IMPERIAL
21-84-4	CABLE or SHAFT		1	2426 164			
			1	---- ---	2496 292		
			1	---- ---	---- ---	2076 271	
21-84-7	CLAMP or RETAINER, Cable		1	2204 942	2204 942	2204 942	
21-84-28	SEAL, Speedometer Cable Adapter		1	1942 259	1942 259	1942 259	

21-85-0 TRANSMISSION SPEEDOMETER PINION

21-85-5 PINION MANUAL 3 SPEED TRANSMISSION - V2, L2, R2, W2, P2, D2, C1, C2 - A745

Tire Size	2.93 to 1 Ratio Pinion Teeth	3.23 to 1 Ratio Pinion Teeth	3.31 to 1 Ratio Pinion Teeth	3.55 to 1 Ratio Pinion Teeth	3.91 to 1 Ratio Pinion Teeth
7.00 x 13	1949 403 19 R	1949 405 21 LB	---- --- -- --	1949 406 22 Y	---- --- -- --
6.95 x 14	*1949 403 19 R	*1949 405 21 LB	---- --- -- --	*1949 405 21 LB(3)	---- --- -- --
7.35 x 14	1949 402 18 N	1949 404 20 B	1949 405 21 LB	1949 404 20 B(3)	1949 406 22 Y(3)
7.75 x 14	1949 402 18 N	1949 404 20 B	1949 404 20 B	1949 404 20 B(3)	1949 406 22 Y(3)
8.25 x 14	1949 402 18 N	1949 403 19 R	1949 404 20 B	1949 405 21 LB	1949 405 21 LB(3)
8.55 x 14	---- --- -- --	1949 403 19 R	---- --- -- --	---- --- -- --	---- --- -- --
9.00 x 14	---- --- -- --	1949 402 18 N	---- --- -- --	---- --- -- --	---- --- -- --
6.70 x 15	1949 401 17 LP	1949 403 19 R	1949 404 20 B	1949 405 21 LB	1949 405 21 LB(3)
7.10 x 15	---- --- -- --	1949 403 19 R	---- --- -- --	---- --- -- --	---- --- -- --
7.60 x 15	---- --- -- --	1949 402 18 N	---- --- -- --	1949 404 20 B	1949 406 22 Y

COLOR OF PINIONS

LP-LIGHT PURPLE	N-NATURAL	R-RED	B-BLACK	LB-LIGHT BLUE	Y-YELLOW

NOTE 3: Use .9058 to 1 Ratio Adapter. Available at Stewart Warner Corporation.

PINION MANUAL 3 SPEED TRANSMISSION - V1, L1, R1, W1, P1 - A903

Tire Size	2.93 to 1 Ratio Pinion Teeth	3.23 to 1 Ratio Pinion Teeth	3.31 to 1 Ratio Pinion Teeth	3.55 to 1 Ratio Pinion Teeth	3.91 to 1 Ratio Pinion Teeth
6.50 x 13	2204 356 17 O	2204 358 19 DB	---- --- -- --	2204 359 20 G	2204 359 20 G(2)
7.00 x 13	2204 356 17 O	2204 357 18 DP	---- --- -- --	2204 359 20 G	2204 359 20 G(2)
7.35 x 14	---- --- -- --	2204 357 18 DP	2204 357 18 DP	2204 359 20 G	2204 360 21 GR
7.75 x 14	---- --- -- --	2204 356 17 O	2204 357 18 DP	2204 358 19 DB	2204 360 21 GR
8.25 x 14	2204 355 16 B	2204 356 17 O	2204 356 17 O	2204 358 19 DB	2204 360 21 GR
8.55 x 14	---- --- -- --	2204 356 17 O	---- --- -- --	2204 357 18 DP	2204 359 20 G
6.40 x 15	---- --- -- --	2204 356 17 O	---- --- -- --	---- --- -- --	---- --- -- --
6.70 x 15	---- --- -- --	2204 356 17 O	2204 356 17 O	2204 357 18 DP	2204 359 20 G
7.10 x 15	*2204 358 19 DB	*2204 355 16 B	*2204 356 17 O	*2204 357 18 DP	*2204 359 20 G
7.60 x 15	---- --- -- --	*2204 355 16 B	---- --- -- --	*2204 356 17 O	*2204 358 19 DB

COLORS OF PINION

B-BROWN	O-ORANGE	DP-DARK PURPLE	DB-DARK BLUE	G-GREEN	GR-GRAY

NOTE 2: Use .9058 to 1 Ratio Adapter. Available at Stewart Warner Corporation.

MyMopar.com

21-85-0 TRANSMISSION SPEEDOMETER PINION - Cont'd

MANUAL TRANSMISSION

21-85-5 PINION MANUAL 4 SPEED TRANSMISSION - V, L, R2, W2, P2, D2, C1, C2 - A833

Tire Size	2.93 to 1 Ratio Pinion Teeth	3.23 to 1 Ratio Pinion Teeth	3.55 to 1 Ratio Pinion Teeth	3.91 to 1 Ratio Pinion Teeth	4.56 to 1 Ratio Pinion Teeth
6.50 x 13	2204 358 19 DB	2204 360 21 GR	2204 358 19 DB(4)	2204 360 21 GR(4)	---- --- -- --
7.00 x 13	2204 358 19 DB	2204 360 21 GR	2204 357 18 DP(4)	---- --- -- --	---- --- -- --
6.95 x 14	*2204 358 19 DB	*2204 360 21 G	*2204 357 18 DP(4)	---- --- -- --	---- --- -- --
7.35 x 14	2204 357 18 DP	2204 359 20 G	2204 357 18 DP(4)	---- --- -- --	---- --- -- --
7.75 x 14	2204 357 18 DP	2204 359 20 G	2204 357 18 DP(4)	2204 358 19 DB(4)	2204 360 21GR(4)
8.25 x 14	2204 357 18 DP	2204 358 19 DB	2204 360 21 GR	2204 358 19 DB(4)	---- --- -- --
8.55 x 14	2204 356 17 O	2204 358 19 DB	---- --- -- --	---- --- -- --	---- --- -- --
9.00 x 14	2204 355 16 B	2204 357 18 DP	---- --- -- --	2204 357 18 DP(4)	---- --- -- --
6.70 x 15	2204 356 17 O	2204 358 19 DB	2204 360 21 GR	---- --- -- --	---- --- -- --
7.10 x 15	2204 356 17 O	2204 358 19 DB	---- --- -- --	---- --- -- --	---- --- -- --
7.60 x 15	2204 356 17 O	2204 357 18 DP	---- --- -- --	---- --- -- --	---- --- -- --

COLOR OF PINIONS

B-BROWN	O-ORANGE	DP-DARK PURPLE	DB-DARK BLUE	G-GREEN	GR-GRAY

NOTE 4: Use .8000 to 1 Ratio Adapter, Available at Stewart Warner Corporation.

CODE	PART NAME AND DESCRIPTION	CYL	PER CAR	VALIANT / DART	PLYMOUTH BELVEDERE / DODGE CORONET	PLYMOUTH FURY / DODGE POLARA / CHRYSLER	IMPERIAL
21-85-22	SEAL, Adapter, P, D.		1	2426 332	2426 332	2426 332	
21-85-56	SEAL, Pinion		1	2124 328	2124 328	2124 328	
21-85-61	CLIP, Pinion		1	1942 174	1942 174	1942 174	

NOTES

TYPE LETTERS indicate: V - Valiant, L - Dart, R - Belvedere, W - Coronet, P - Plymouth, D - Dodge, C - Chrysler, Y - Imperial

★Indicates use as required. Numerals in parentheses ( ) refer to notes. Printed in U.S.A.

⊟Indicates parts not listed in any previous parts book. Prices and specifications subject to change without notice.

March 1966 Supersedes May 1965. * Indicates change or addition.

MyMopar.com

MANUAL TRANSMISSION

NOTE: All quantities are one (1) unless otherwise indicated in parenthesis.

	TRANSMISSION	2464 589 3 Speed A903	2464 590 3 Speed A903	2466 085 3 Speed A745	2464 262 4 Speed A833	2464 592 3 Speed A903
21-01-0	**TRANSMISSION SETS OR PACKAGES**					
21-01-3	GASKET SET	2196 062	2196 062	2275 893	2448 790	2275 896
21-02-0	**TRANSMISSION VENT**					
21-02-6	VENT	1139 204	1139 204	1139 204	2124 715	1139 204
21-03-0	**TRANSMISSION CASE**					
21-03-1	CASE	2464 915	2464 915	*2466 745	2464 000	2464 915
21-03-24	PLUG, Back-Up Light Switch Hole .	1139 153	1139 153	1139 153	1139 153	1139 153
21-03-25	GASKET	1302 807	1302 807	1302 807	1302 807	1302 807
21-04-0	**TRANSMISSION CASE EXTENSION**					
21-04-1	EXTENSION	2400 738	2400 738	2466 067	2464 170	2400 737
	BOLT	---- ---	---- ---	* 180 149	---- ---	---- ---
21-04-2	GASKET	1949 361	1949 361	2124 519	2464 059	1949 361
21-04-11	BUSHING, Extension	2124 607	2124 607	---- ---	---- ---	1941 887
	BEARING	---- ---	---- ---	1672 194	1672 194	---- ---
21-09-0	**TRANSMISSION MAIN DRIVE PINION**					
21-09-2	PINION, 24T., 17T., 23 Splines, 10 1/2" lgh.	*2204 554	---- ---	---- ---	---- ---	---- ---
	24T., 18T., 23 Splines, 10 1/2" lgh., w/225 cu. in. Engine	---- ---	*2204 944	---- ---	---- ---	*2204 944
	23T., 22T., 36T., 11 13/16" lgh. .	---- ---	---- ---	---- ---	2464 673	---- ---
	24T., 18T., 23 Splines, 10 17/32" lgh.	---- ---	---- ---	2408 147	---- ---	---- ---
21-09-5	BEARING, w/SNAP RING	1633 718	1633 718	* 927 530	* 927 630	1633 718
21-09-19	SLINGER, Bearing Oil	1633 669	1633 669	1633 669	1633 669	1633 669
21-09-23	SNAP RING, Bearing, .088" thk. (★)	631 823	631 823	631 823	631 823	631 823
	.091" thk. (★)	631 824	631 824	631 824	631 824	631 824
	.094" thk. (★)	631 825	631 825	631 825	631 825	631 825
	.097" thk. (★)	640 332	640 332	640 332	640 332	640 332
	.067" thk. Outer	---- ---	---- ---	2124 518	2124 518	---- ---
21-09-25	WASHER, Bearing	631 877	631 877	---- ---	---- ---	631 877
21-09-29	RETAINER, Bearing	2204 491	2204 491	2124 945	2124 945	2204 491
21-09-30	OIL SEAL, Pinion	1949 343	1949 343	1949 343	1949 343	1949 343
21-09-31	SCREW, Retainer (★)	1920 101	1920 101	1920 101	1920 101	1920 101
21-09-33	GASKET, Bearing Retainer	672 709	672 709	2124 499	2124 499	672 709
21-10-0	**TRANSMISSION MAIN DRIVE GEARS**					
21-10-3	GEAR, First Speed	---- ---	---- ---	---- ---	2464 018	---- ---

TYPE LETTERS Indicate: V - Valiant, L - Dart, R - Belvedere, W - Coronet, P - Plymouth, D - Dodge, C - Chrysler, Y - Imperial

★Indicates use as required. Numerals in parentheses ( ) refer to notes. Printed in U.S.A.

⊟Indicates parts not listed in any previous parts book. Prices and specifications subject to change without notice.

* Indicates change or addition. March 1966 Supersedes May 1965.

MyMopar.com

MANUAL TRANSMISSION

NOTE: All quantities are one (1) unless otherwise indicated in parenthesis.

	TRANSMISSION	2464 589 3 Speed A903	2464 590 3 Speed A903	2466 085 3 Speed A745	2464 262 4 Speed A833	2464 592 3 Speed A903
21-10-0	**TRANSMISSION MAIN DRIVE GEARS - Cont'd**					
21-10-4	GEAR, Sliding, First and Reverse, 29T., 32 Splines	2464 578	2464 578	---- ---	---- ---	2464 578
	First and Reverse, 28T., 34 Splines	---- ---	---- ---	2124 561	---- ---	---- ---
21-10-16	GEAR, Second Speed, 23T., 24T.	*2538 067	---- ---	---- ---	---- ---	---- ---
	32T., 36T	---- ---	---- ---	---- ---	2464 069	---- ---
	24T., 24T.	---- ---	2464 575	---- ---	---- ---	2464 575
	24T., 24T.	---- ---	---- ---	2124 560	---- ---	---- ---
21-10-26	SNAP RING, Plate	2400 240	2400 240	---- ---	---- ---	2400 240
21-10-29	PLATE	2464 586	2464 576	---- ---	---- ---	2464 576
	PIN	---- ---	151 972	---- ---	---- ---	151 972
21-10-30	SPRING, Plate	2464 577	2464 577	---- ---	---- ---	2464 577
21-10-31	GEAR, Third Speed	---- ---	---- ---	---- ---	2464 659	---- ---
21-11-0	**TRANSMISSION REVERSE IDLER GEAR**					
21-11-1	GEAR, 15T.	1853 695	1853 695	---- ---	---- ---	1853 695
	14T.	---- ---	---- ---	2124 562	---- ---	---- ---
	22T.	---- ---	---- ---	---- ---	2464 073	---- ---
21-11-2	ROLLER, Bearing (22)	666 927	666 927	666 927	---- ---	666 927
21-11-9	WASHER (2)	666 924	666 924	2204 978	---- ---	666 924
21-12-0	**TRANSMISSION REVERSE IDLER GEAR SHAFT**					
21-12-1	SHAFT	1635 290	1635 290	1635 290	2464 023	1635 290
21-12-2	KEY	1635 293	1635 293	1635 293	1635 293	1635 293
21-14-0	**TRANSMISSION CLUTCH GEAR**					
21-14-1	SYNCHRONIZER UNIT, First, Second and Reverse	---- ---	---- ---	---- ---	*2464 033	---- ---
	Third and Direct	---- ---	---- ---	---- ---	2464 026	---- ---
21-14-5	GEAR, 24T., 32T.	2204 619	2204 619	2204 666	---- ---	2204 619
21-14-6	SLEEVE	1676 197	1676 197	2124 387	---- ---	1676 197
21-14-15	SPRING, Synchronizer Stop Ring	2408 163	2408 163	2408 164	---- ---	2408 163
	(4)	---- ---	---- ---	---- ---	2464 674	---- ---
21-14-19	RING, Synchronizer Stop, Outer, (2)	2464 839	2464 839	2464 836	---- ---	2464 839
	Inner (2)	2400 533	2400 533	2124 472	---- ---	2400 533
	(4)	---- ---	---- ---	---- ---	2464 029	---- ---
21-14-20	SNAP RING	2205 192	2205 192	2205 192	---- ---	2205 192
	First and Second	---- ---	---- ---	---- ---	6024 131	---- ---
	Third and Direct	---- ---	---- ---	---- ---	6024 131	
21-14-21	SHIM, Synchronizer (★)	2464 724	2464 724	2464 724	---- ---	2464 724

TYPE LETTERS Indicate: V - Valiant, L - Dart, R - Belvedere, W - Coronet, P - Plymouth, D - Dodge, C - Chrysler, Y - Imperial

★Indicates use as required. Numerals in parentheses ( ) refer to notes. Printed in U.S.A.

⊟Indicates parts not listed in any previous parts book. Prices and specifications subject to change without notice.

March 1966 Supersedes May 1965. * Indicates change or addition.

MyMopar.com

MANUAL TRANSMISSION

NOTE: All quantities are one (1) unless otherwise indicated in parenthesis.

	TRANSMISSION	2464 589 3 Speed A903	2464 590 3 Speed A903	2466 085 3 Speed A745	2464 262 4 Speed A833	2464 592 3 Speed A903
21-15-0	**TRANSMISSION COUNTERSHAFT GEAR**					
21-15-2	GEAR, 34T., 25T., 18T., 14T., 6 25/32" lgh.	2464 580	---- ---	---- ---	---- ---	---- ---
	33T., 24T., 18T., 14T., 6 25/32" lgh.	---- ---	2538 068	---- ---	---- ---	2538 068
	33T., 25T., 17T., 13T.	---- ---	---- ---	2124 386	---- ---	---- ---
	33T., 29T., 25T., 17T., 17T., 9" lgh.	---- ---	---- ---	---- ---	2464 658	---- ---
	PIN, Gear	* 151 972	151 972			
21-15-12	PLATE	2464 582	---- ---	---- ---	---- ---	---- ---
21-15-13	SPRING, Plate	2466 634	2466 634	---- ---	---- ---	2466 634
21-15-32	SNAP RING, Plate	6024 141	6024 141	---- ---	---- ---	6024 141
21-15-33	WASHER, Thrust (2)	1633 763	1633 763	2124 505	2464 670	1633 763
21-16-0	**TRANSMISSION MAIN SHAFT**					
21-16-3	SHAFT, 32, 32, 23, Splines, 22 1/4" lgh.	2400 390	2400 390			
	23, 40, 40, Splines, 21 23/32" lgh.	---- ---	---- ---	---- ---	2464 169	
	32, 32, 23, Splines, 25 1/2" lgh.	---- ---	---- ---	---- ---	---- ---	2204 616
	32, 34, 23, Splines, 21 23/32" lgh.	---- ---	---- ---	*2466 069	---- ---	---- ---
21-17-0	**TRANSMISSION MAIN SHAFT PILOT BEARING**					
21-17-2	ROLLER (★)	1949 834	1949 834	1949 834	1949 834	1949 834
21-17-7	SNAP RING, Roller	601 108	601 108	862 173	6024 130	601 108
21-19-0	**TRANSMISSION MAIN SHAFT BEARING**					
21-19-2	BEARING	1633 718	1633 718	620 521	620 521	1633 718
21-19-15	SNAP RING, Inner, .088" thk. (★)	631 823	631 823	631 823	631 823	631 823
	Inner, .091" thk. (★)	631 824	631 824	631 824	631 824	631 824
	Inner, .095" thk. (★)	631 825	631 825	631 825	631 825	631 825
	Inner, .097" thk. (★)	640 332	640 332	640 332	640 332	640 332
	Outer, .086" thk. (★)	640 280	640 280	---- ---	---- ---	640 280
	Outer, .089" thk. (★)	631 809	631 809	---- ---	---- ---	631 809
	Outer, .092" thk. (★)	631 810	631 810	---- ---	---- ---	631 810
	Outer, .095" thk. (★)	640 331	640 331	---- ---	---- ---	640 331
	Outer, .087" thk. (★)	---- ---	---- ---	2124 508	---- ---	---- ---
	Outer, .090" thk. (★)	---- ---	---- ---	2124 509	---- ---	---- ---
	Outer, .093" thk. (★)	---- ---	---- ---	2124 510	---- ---	---- ---
	Outer, .096" thk. (★)	---- ---	---- ---	2124 511	---- ---	---- ---
	Outer (★)	---- ---	---- ---	---- ---	6024 125	---- ---
21-22-0	**TRANSMISSION MAIN SHAFT BEARING OIL SEAL**					
21-22-2	OIL SEAL	1942 401	1942 401	2205 080	2205 080	1854 449
21-24-0	**TRANSMISSION COUNTERSHAFT**					
21-24-2	COUNTERSHAFT	1635 282	1635 282	2124 393	2464 012	1635 282
21-24-19	PLATE or WASHER, Roller Thrust.	---- ---	---- ---	2124 474	---- ---	---- ---

TYPE LETTERS Indicate: V - Valiant, L - Dart, R - Belvedere, W - Coronet, P - Plymouth, D - Dodge, C - Chrysler, Y - Imperial

★Indicates use as required. Numerals in parentheses ( ) refer to notes. Printed in U.S.A.

⊟Indicates parts not listed in any previous parts book. Prices and specifications subject to change without notice.

* Indicates change or addition. March 1966 Supersedes May 1965.

MyMopar.com

MANUAL TRANSMISSION

NOTE: All quantities are one (1) unless otherwise indicated in parenthesis.

	TRANSMISSION	2464 589 3 Speed A903	2464 590 3 Speed A903	2466 085 3 Speed A745	2464 262 4 Speed A833	2464 592 3 Speed A903
21-24-0	**TRANSMISSION COUNTERSHAFT - Cont'd**					
21-24-22	KEY	1635 293	1635 293	1635 293	1635 293	1635 293
21-25-0	**TRANSMISSION COUNTERSHAFT BEARING**					
21-25-2	ROLLER (44)	666 927	666 927	---- ---	---- ---	666 927
	(88)	---- ---	---- ---	2124 502		
	(76)	---- ---	---- ---	---- ---	2464 744	---- ---
21-25-4	SPACER	697 812	697 812	2124 473	2464 013	697 812
21-25-6	WASHER or RING, Roller Thrust (2)	1630 878	1630 878	---- ---	---- ---	1630 878
	(4)	---- ---	---- ---	2124 506	2464 743	---- ---
21-29-0	**TRANSMISSION CASE COVER OR HOUSING**					
21-29-3	COVER	1949 345	1949 345	2124 465	---- ---	1949 345
	HOUSING	---- ---	---- ---	---- ---	2464 001	---- ---
21-29-25	GASKET, Cover	1949 346	1949 346	2124 466	---- ---	1949 346
	HOUSING	---- ---	---- ---	---- ---	2464 037	---- ---
21-29-33	BOLT, Housing (8)	---- ---	---- ---	---- ---	6024 457	---- ---
21-34-0	**TRANSMISSION GEARSHIFT RAIL**					
21-34-42	PIN, Interlock	1949 356	1949 356	1949 356	2464 046	1949 356
21-34-44	PLUG, Reverse Lever Detent	---- ---	---- ---	---- ---	1139 153	---- ---
21-34-45	SLEEVE, Interlock	1949 355	1949 355	1949 355	2464 045	1949 355
21-34-46	GASKET, Reverse Lever Detent Plug	---- ---	---- ---	---- ---	1302 807	---- ---
21-34-47	SPRING, Interlock Ball	2205 131	2205 131	2205 131	2464 047	2205 131
	Reverse Lever Detent Ball	---- ---	---- ---	---- ---	2466 457	---- ---
21-34-51	RETAINER, Reverse Lever Detent Spring	---- ---	---- ---	---- ---	2464 052	---- ---
21-34-53	GASKET, Retainer	---- ---	---- ---	---- ---	2464 053	---- ---
21-39-0	**TRANSMISSION GEARSHIFT FORK**					
21-39-3	FORK, Low and Reverse	1949 351	1949 351	2124 463	---- ---	1949 351
	Second and Direct	2125 059	2125 059	2124 462	---- ---	2125 059
	Low and Second	---- ---	---- ---	---- ---	*2538 421	---- ---
	Third and Direct	---- ---	---- ---	---- ---	*2466 961	---- ---
	Reverse	---- ---	---- ---	---- ---	2464 051	---- ---
21-42-0	**TRANSMISSION REMOTE CONTROL GEARSHIFT**					
21-42-11	LEVER, Low and Reverse	1949 347	1949 347	2124 523	---- ---	1949 347
	Second and Direct	1949 352	1949 352	2124 494	---- ---	1949 352
	Low and Second, Stamped "A"	---- ---	---- ---	---- ---	*2464 041	---- ---
	Stamped "B"	---- ---	---- ---	---- ---	⊟2466 214	---- ---
	Stamped "C"	---- ---	---- ---	---- ---	⊟2466 215	---- ---
	Third and Direct	---- ---	---- ---	---- ---	2464 038	---- ---
	Reverse	---- ---	---- ---	---- ---	2464 048	---- ---

TYPE LETTERS Indicate: V - Valiant, L - Dart, R - Belvedere, W - Coronet, P - Plymouth, D - Dodge, C - Chrysler, Y - Imperial

★Indicates use as required. Numerals in parentheses ( ) refer to notes. Printed in U.S.A.

⊟Indicates parts not listed in any previous parts book. Prices and specifications subject to change without notice.

March 1966 Supersedes May 1965. * Indicates change or addition.

MyMopar.com

MANUAL TRANSMISSION

NOTE: All quantities are one (1) unless otherwise indicated in parenthesis.

	TRANSMISSION	2464 589	2464 590	2466 085	2464 262	2464 592
		3 Speed A903	3 Speed A903	3 Speed A745	4 Speed A833	3 Speed A903
21-42-0	**TRANSMISSION REMOTE CONTROL GEARSHIFT - Cont'd**					
21-42-16	PIN, Shaft (2)	6022 161	6022 161	6022 161	6022 161	6022 161
21-42-23	LEVER, Operating, Low and Reverse	2464 374	2464 374	2466 289	---- ---	---- ---
	Low and Reverse, L. H. D., One Piece Interlock Type	---- ---	---- ---	*2538 607	---- ---	---- ---
	Second and Direct	2464 376	2464 376	2464 376	---- ---	2208 160
	Low and Reverse, R1, W1	---- ---	---- ---	---- ---	---- ---	2464 378
	Low and Reverse, P1	---- ---	---- ---	---- ---	---- ---	2466 747
	Low and Second	---- ---	---- ---	---- ---	2464 176	---- ---
	Third and Direct	---- ---	---- ---	---- ---	2464 055	--- ---
	Reverse	---- ---	---- ---	---- ---	2464 057	---- ---
	CLIP, Interlock Lever, One Piece Lever Type	---- ---	---- ---	*6025 071	---- ---	---- ---
21-42-25	WASHER, Low and Reverse Interlock Lever Spring, One Piece Lever Type	---- ---	---- ---	⊟6026 239	---- ---	---- ---
21-42-28	PIN, Low and Reverse Interlock Lever Pivot, One Piece Lever Type	---- ---	---- ---	⊟2538 013	---- ---	---- ---
21-42-29	PAWL, Low and Reverse Interlock Lever, L. H. D., One Piece Interlock Type	---- ---	---- ---	⊟2538 014	---- ---	---- ---
21-42-31	SEAL, Gearshift Lever Shaft (2)	1949 350	1949 350	1949 350	1536 267	1949 350
21-42-42	BUSHING, Operating Lever Grommet (2)	1676 200	1676 200	1676 200	---- ---	1676 200
21-42-43	GROMMET, Operating Lever (2)	1941 699	1941 699	1941 699	---- ---	1941 699

NOTE: All quantities are one (1) unless otherwise indicated in parenthesis.

	TRANSMISSION	2464 094	2464 098	2464 641	2464 261
		3 Speed A745	3 Speed A745	4 Speed A833	4 Speed A833
21-01-0	**TRANSMISSION SETS OR PACKAGES**				
21-01-3	GASKET SET, w/o 426 cu. in. Engine, Hemispherical	2275 893	2275 893	2448 790	2448 790
	w/426 cu. in. Engine, Hemispherical	---- ---	---- ---	2585 543	---- ---
21-02-0	**TRANSMISSION VENT**				
21-02-6	VENT	1139 204	1139 204	2124 715	2124 715
21-03-0	**TRANSMISSION CASE**				
21-03-1	CASE	*2466 745	*2466 745	2464 000	2464 000
21-03-24	PLUG, Back-Up Light Switch Hole	1139 153	1139 153	1139 153	1139 153
21-03-25	GASKET	1302 807	1302 807	1302 807	1302 807
21-04-0	**TRANSMISSION CASE EXTENSION**				
21-04-1	EXTENSION	2400 627	2400 627	2464 644	2464 002
	BOLT	---- ---	* 180 149	---- ---	---- ---
21-04-2	GASKET	2124 519	2124 519	2464 059	2464 059
21-04-11	BEARING	1672 194	1672 194	1672 194	1672 194

TYPE LETTERS Indicate: V - Valiant, L - Dart, R - Belvedere, W - Coronet, P - Plymouth, D - Dodge, C - Chrysler, Y - Imperial

★Indicates use as required. Numerals in parentheses ( ) refer to notes. Printed in U.S.A.

⊟Indicates parts not listed in any previous parts book. Prices and specifications subject to change without notice.

* Indicates change or addition. March 1966 Supersedes May 1965.

MyMopar.com

MANUAL TRANSMISSION

NOTE: All quantities are one (1) unless otherwise indicated in parenthesis.

	TRANSMISSION	2464 094 3 Speed A745	2464 098 3 Speed A745	2464 641 4 Speed A833	2464 261 4 Speed A833
21-09-0	**TRANSMISSION MAIN DRIVE PINION**				
21-09-2	PINION, 36T., 23T., 24T., 11 15/64" lgh., w/o 426 cu. in. Engine, Hemispherical	---- ---	---- ---	*2466 406	*2466 406
	18T., 21T., 36T., 11 15/64" lgh., w/426 cu. in. Engine, Hemispherical	---- ---	---- ---	2538 196	---- ---
	24T., 18T., 23 Splines, 10 17/32" lgh.	2408 147	---- ---	---- ---	---- ---
	24T., 20T., 23 Splines, 10 17/32" lgh.	---- ---	2124 937	---- ---	---- ---
21-09-5	BEARING, w/Snap RING	* 927 630	* 927 630	* 927 630	* 927 630
21-09-19	SLINGER, Bearing Oil	1633 669	1633 669	1633 669	1633 669
21-09-23	SNAP RING, Bearing, .088" thk. (★)	631 823	631 823	631 823	631 823
	.091" thk. (★)	631 824	631 824	631 824	631 824
	.094" thk. (★)	631 825	631 825	631 825	631 825
	.097" thk. (★)	640 332	640 332	640 332	640 332
	Outer	2124 518	2124 518	2124 518	2124 518
21-09-25	WASHER, Bearing	631 877	---- ---	---- ---	---- ---
21-09-29	RETAINER, Bearing, w/o 426 cu. in. Engine, Hemispherical	2124 945	2124 945	2124 945	2124 945
	w/426 cu. in. Engine, Hemispherical	---- ---	---- ---	2538 197	---- ---
21-09-30	OIL SEAL, Pinion, w/o 426 cu. in. Engine, Hemispherical	1949 343	1949 343	1949 343	1949 343
	w/426 cu. in. Engine, Hemispherical	---- ---	---- ---	2464 492	---- ---
21-09-31	SCREW, Retainer (★)	1920 101	1920 101	1920 101	1920 101
21-09-33	GASKET, Bearing Retainer	2124 499	2124 499	2124 499	2124 499
21-10-0	**TRANSMISSION MAIN DRIVE GEARS**				
21-10-3	GEAR, First Speed	---- ---	---- ---	2464 018	2464 018
21-10-4	GEAR, First and Reverse, 28T., 34 Splines	2124 561	2124 561	---- ---	---- ---
21-10-16	GEAR, Second Speed, 36T., 34T., w/o 426 cu. in. Engine, Hemispherical	---- ---	---- ---	*2464 017	*2464 017
	24T., 24T.	2124 560	2124 560		
	36T., 34T., w/426 cu. in. Engine. Hemispherical	---- ---	---- ---	⊟2538 075	---- ---
	36T., 34T., w/426 cu. in. Hemispherical	---- ---	---- ---	⊟2538 075	---- ---
21-10-31	GEAR, Third Speed, w/o 426 cu. in. Engine, Hemispherical	---- ---	---- ---	2464 016	2464 016
	w/426 cu. in. Engine, Hemispherical	---- ---	---- ---	2538 202	---- ---
21-11-0	**TRANSMISSION REVERSE IDLER GEAR**				
21-11-1	GEAR, 14T.	2124 562	2124 562	---- ---	---- ---
	22T.	---- ---	---- ---	2464 073	2464 073
21-11-2	ROLLER, Bearing (22)	666 927	666 927	---- ---	---- ---
21-11-9	WASHER (2)	2204 978	2204 978	---- ---	---- ---

TYPE LETTERS Indicate: V - Valiant, L - Dart, R - Belvedere, W - Coronet, P - Plymouth, D - Dodge, C - Chrysler, Y - Imperial

★Indicates use as required. Numerals in parentheses ( ) refer to notes. Printed in U.S.A.

⊟Indicates parts not listed in any previous parts book. Prices and specifications subject to change without notice.

March 1966 Supersedes May 1965. * Indicates change or addition.

MyMopar.com

MANUAL TRANSMISSION

NOTE: All quantities are one (1) unless otherwise indicated in parenthesis.

	TRANSMISSION	2464 094	2464 098	2464 641	2464 261
		3 Speed A745	3 Speed A745	4 Speed A833	4 Speed A833
21-12-0	**TRANSMISSION REVERSE IDLER GEAR SHAFT**				
21-12-1	SHAFT	1635 290	1635 290	2464 023	2464 023
21-12-2	KEY	1635 293	1635 293	1635 293	1635 293
21-14-0	**TRANSMISSION CLUTCH GEAR**				
21-14-1	SYNCHRONIZER UNIT, First, Second and Reverse	---- ---	---- ---	2464 033	2464 033
	Third and Direct	---- ---	---- ---	2464 026	2464 026
21-14-5	GEAR, 24T., 32T.	2204 666	2204 666		
21-14-6	SLEEVE	2124 387	2124 387	---- ---	---- ---
21-14-15	SPRING, Synchronizer Stop Ring . .	2408 164	2408 164		
	(4)	---- ---	---- ---	2464 674	2464 674
21-14-19	RING, Synchronizer Stop, Outer, (2).	2464 836	2464 836	---- ---	---- ---
	Inner (2)	2124 472	2124 472	---- ---	---- ---
	(4)	---- ---	---- ---	2464 029	2464 029
21-14-20	SNAP RING	2205 192	2205 192	---- ---	---- ---
	First and Second	---- ---	---- ---	6024 131	6024 131
	Third and Direct	---- ---	---- ---	6024 131	6024 131
21-14-21	SHIM, Synchronizer (★)	2464 724	2464 724	---- ---	---- ---
21-15-0	**TRANSMISSION COUNTERSHAFT GEAR**				
21-15-2	GEAR, 33T., 25T., 17T., 13T . . .	2124 386	---- ---	---- ---	---- ---
	31T., 27T., 23T., 17T., 17T., 9 1/32" lgh., w/o 426 cu. in. Engine, Hemispherical	---- ---	---- ---	2464 011	2464 011
	27T., 24T., 23T., 17T., 17T., 9 1/32" lgh., w/426 cu. in. Engine, Hemispherical	---- ---	---- ---	2538 195	---- ---
	31T., 25T., 17T., 13T.	---- ---	2124 384	---- ---	---- ---
21-15-33	WASHER, Thrust (2)	2124 505	2124 505	2464 670	2464 670
21-16-0	**TRANSMISSION MAIN SHAFT**				
21-16-3	SHAFT, 32, 34, 23, Splines, 25 1/4" lgh.	2408 041	2408 041	---- ---	---- ---
	23, 40, 40, Splines, 27 13/32" lgh.	---- ---	---- ---	2464 035	2464 035
21-17-0	**TRANSMISSION MAIN SHAFT PILOT BEARING**				
21-17-2	ROLLER (★)	1949 834	1949 834	1949 834	1949 834
21-17-7	SNAP RING, Roller	862 173	862 173	6024 130	6024 130

TYPE LETTERS Indicate: V - Valiant, L - Dart, R - Belvedere, W - Coronet, P - Plymouth, D - Dodge, C - Chrysler, Y - Imperial

★Indicates use as required. Numerals in parentheses ( ) refer to notes. Printed in U.S.A.

⊟Indicates parts not listed in any previous parts book. Prices and specifications subject to change without notice.

* Indicates change or addition. March 1966 Supersedes May 1965.

MyMopar.com

MANUAL TRANSMISSION

NOTE: All quantities are one (1) unless otherwise indicated in parenthesis.

	TRANSMISSION	2464 094 3 Speed A745	2464 098 3 Speed A745	2464 641 4 Speed A833	2464 261 4 Speed A833
21-19-0	**TRANSMISSION MAIN SHAFT BEARING**				
21-19-2	BEARING	620 521	620 521	620 521	620 521
21-19-15	SNAP RING, Inner, .088" thk. (★)	631 823	631 823	631 823	631 823
	Inner, .091" thk. (★)	631 824	631 824	631 824	631 824
	Inner, .095" thk. (★)	631 825	631 825	631 825	631 825
	Inner, .097" thk. (★)	640 332	640 332	640 332	640 332
	Outer, .087" thk. (★)	2124 508	2124 508	---- ---	---- ---
	Outer, .090" thk. (★)	2124 509	2124 509	---- ---	---- ---
	Outer, .093" thk. (★)	2124 510	2124 510	---- ---	---- ---
	Outer, .096" thk. (★)	2124 511	2124 511	---- ---	---- ---
	Outer (★)	---- ---	---- ---	6024 125	6024 125
21-22-0	**TRANSMISSION MAIN SHAFT BEARING OIL SEAL**				
21-22-2	OIL SEAL	2205 080	2205 080	2205 080	2205 080
21-24-0	**TRANSMISSION COUNTERSHAFT**				
21-24-2	COUNTERSHAFT	2124 393	2124 393	2464 012	2464 012
21-24-19	PLATE or WASHER, Roller Thrust	2124 474	2124 474	---- ---	---- ---
21-24-22	KEY	1635 293	1635 293	1635 293	1635 293
21-25-0	**TRANSMISSION COUNTERSHAFT BEARING**				
21-25-2	ROLLER (88)	2124 502	2124 502	---- ---	---- ---
	(76)	---- ---	---- ---	2464 744	2464 744
21-25-4	SPACER	2124 473	2124 473	2464 013	2464 013
21-25-6	WASHER or RING, Roller Thrust (4)	2124 506	2124 506	2464 743	2464 743
21-29-0	**TRANSMISSION CASE COVER OR HOUSING**				
21-29-3	COVER	2124 465	2124 465	---- ---	---- ---
	HOUSING, w/o 426 cu. in. Engine, Hemispherical	---- ---	---- ---	2464 001	2464 001
	w/426 cu. in. Engine, Hemispherical	---- ---	---- ---	*2464 001	---- ---
21-29-25	GASKET, Cover	2124 466	2124 466	---- ---	---- ---
	HOUSING	---- ---	---- ---	2464 037	2464 037
21-29-33	BOLT, Housing (8)	---- ---	---- ---	6024 457	6024 457
21-34-0	**TRANSMISSION GEARSHIFT RAIL**				
21-34-42	PIN, Interlock	1949 356	1949 356	2464 046	2464 046
21-34-44	PLUG, Reverse Lever Detent . . .	---- ---	---- ---	1139 153	1139 153
21-34-45	SLEEVE, Interlock	1949 355	1949 355	2464 045	2464 045
21-34-46	GASKET, Reverse Lever Detent Plug	---- ---	---- ---	1302 807	1302 807

MyMopar.com

MANUAL TRANSMISSION

NOTE: All quantities are one (1) unless otherwise indicated in parenthesis.

	TRANSMISSION	2464 094 3 Speed A745	2464 098 3 Speed A745	2464 641 4 Speed A833	2464 261 4 Speed A833
21-34-0	**TRANSMISSION GEARSHIFT RAIL - Cont'd**				
21-34-47	SPRING, Interlock Ball	2205 131	2205 131	2464 047	2464 047
21-34-51	RETAINER, Reverse Lever Detent Spring	---- ---	---- ---	2464 052	2464 052
21-34-53	GASKET, Retainer	---- ---	---- ---	2464 053	2464 053
	Reverse Lever Detent Ball	---- ---	---- ---	2466 457	2466 457
21-39-0	**TRANSMISSION GEARSHIFT FORK**				
21-39-3	FORK, Low and Reverse	2124 463	2124 463	---- ---	---- ---
	Second and Direct	2124 462	2124 462	---- ---	---- ---
	Low and Second	---- ---	---- ---	*2538 421	*2538 421
	Third and Direct	---- ---	---- ---	*2466 961	*2466 961
	Reverse	---- ---	---- ---	2464 051	2464 051
21-42-0	**TRANSMISSION REMOTE CONTROL GEARSHIFT**				
21-42-11	LEVER, Low and Reverse	2124 523	2124 523	---- ---	---- ---
	Second and Direct	2124 494	2124 494	---- ---	---- ---
	Low and Second, Stamped "A" . .	---- ---	---- ---	*2464 041	*2464 041
	Stamped "B"	---- ---	---- ---	⊟2466 214	⊟2466 214
	Stamped "C"	---- ---	---- ---	⊟2466 215	2466 215
	Third and Direct	---- ---	---- ---	2464 038	2464 038
	Reverse	---- ---	---- ---	2464 048	2464 048
21-42-16	PIN, Shaft (2)	6022 161	6022 161	6022 161	6022 161
21-42-23	LEVER, Operating, Second and Direct	---- ---	2208 160	---- ---	---- ---
	Low and Reverse, P1 Police and Taxi, Two Piece Interlock Type .	*2466 748	---- ---	---- ---	---- ---
	Low and Reverse, P1 Police and Taxi, One Piece Interlock Type	*2538 016	---- ---	---- ---	---- ---
	Low and Reverse, R2, W2, w/273 and 318 cu. in. Engine, w/GROMMET, Two Piece Interlock Type	*2464 378	---- ---	---- ---	---- ---
	Low and Reverse, R2, W2, w/273 and 318 cu. in. Engine, One Piece Interlock Type	*2538 019	---- ---	---- ---	---- ---
	Low and Reverse, R2, W2, w/273 and 318 cu. in. Engine, w/o Grommet, Two Piece Interlock Type	*2464 379	---- ---	---- ---	---- ---
	Low and Reverse, R2, W2, w/273 and 318 cu. in. Engine, One Piece Interlock Type	⊟2538 017	---- ---	---- ---	---- ---
	Low and Reverse, R1, W1, Police and Taxi, Two Piece Interlock Type	*2464 379	---- ---	---- ---	---- ---
	Low and Reverse, R1, W1, Police and Taxi, One Piece Interlock Type	⊟2538 017			
	Low and Reverse, P2 w/318 cu. in.				
	Low and Reverse, P2, D2-L, w/318 cu. in. Engine, w/GROMMET, Two Piece Interlock Type	*2466 747	---- ---	---- ---	---- ---

TYPE LETTERS Indicate: V - Valiant, L - Dart, R - Belvedere, W - Coronet, P - Plymouth, D - Dodge, C - Chrysler, Y - Imperial

★Indicates use as required. Numerals in parentheses ( ) refer to notes. Printed in U.S.A.

⊟Indicates parts not listed in any previous parts book. Prices and specifications subject to change without notice.

* Indicates change or addition. March 1966 Supersedes May 1965.

MyMopar.com

MANUAL TRANSMISSION

NOTE: All quantities are one (1) unless otherwise indicated in parenthesis.

TRANSMISSION	2464 094 3 Speed A745	2464 098 3 Speed A745	2464 641 4 Speed A833	2464 261 4 Speed A833
21-42-0 TRANSMISSION REMOTE CONTROL GEARSHIFT - Cont'd				
21-42-23 LEVER - Cont'd				
Low and Reverse, P2, D2-L, w/318 cu. in. Engine, One Piece Interlock Type	*2538 018	---- ---	---- ---	---- ---
Low and Reverse, P2 w/318 cu. in. Engine, w/o Grommet, Two Piece Interlock Type	*2466 748	---- ---	---- ---	---- ---
Low and Reverse, P2, w/318 cu. in. Engine, One Piece Interlock Type	*2538 016			
Low and Reverse, R2, W2, w/361 and 383 cu. in. Engine, Two Piece Interlock Type	---- ---	*2464 379	---- ---	---- ---
Low and Reverse, R2, W2, w/361 and 383 cu. in. Engine, One Piece Interlock Type	---- ---	⊟2538 017	---- ---	---- ---
Low and Reverse, P2, D2, w/383 cu. in. Engine, Two Piece Interlock Type	---- ---	*2466 748	---- ---	---- ---
Low and Reverse, P2, D2, w/383 cu. in. Engine, One Piece Interlock Type	---- ---	*2538 016		
Low and Reverse, C2, w/383 and 413 cu. in. Engine, Two Piece Interlock Type	---- ---	*2466 748	---- ---	---- ---
Low and Reverse, C2, w/383 and 413 cu. in. Engine, One Piece Interlock Type	---- ---	*2538 016	---- ---	---- ---
Low and Reverse, C1 w/383 cu. in. Engine, Two Piece Interlock Type	---- ---	*2466 748	---- ---	---- ---
Low and Reverse, C1 w/383 cu. in. Engine, One Piece Interlock Type	---- ---	*2538 016	---- ---	---- ---
Second and Direct, W1, R1, P1, Police and Taxi	2208 160	---- ---	---- ---	---- ---
Second and Direct, R2, W2, w/273 and 318 cu. in. Engine, P2 w/318 cu. in. Engine	2208 160	---- ---	---- ---	---- ---
Interlock, R1, W1, P1, w/225 cu. in. Engine, Police and Taxi	2400 716	---- ---	---- ---	---- ---
Low and Second	---- ---	---- ---	2464 056	2464 056
Third and Direct	---- ---	---- ---	2464 055	2464 055
Reverse	---- ---	---- ---	2464 057	2464 057
CLIP, Interlock Lever, Police and Taxi (2)	6025 071	---- ---	---- ---	---- ---
CLIP, Interlock Lever	*6025 071	*6025 071	---- ---	---- ---
21-42-25 WASHER, Interlock Lever Spring, Police and Taxi	6023 596	---- ---	---- ---	---- ---
Interlock Lever Spring	⊟6026 239	⊟6026 239	---- ---	---- ---
21-42-28 PIN, Low and Reverse Interlock Pivot Police and Taxi	2400 568	---- ---	---- ---	---- ---
Low and Reverse Interlock Pivot	⊟2538 013	⊟2538 013	---- ---	---- ---

TYPE LETTERS Indicate: V - Valiant, L - Dart, R - Belvedere, W - Coronet, P - Plymouth, D - Dodge, C - Chrysler, Y - Imperial

★Indicates use as required. Numerals in parentheses ( ) refer to notes. Printed in U.S.A.
⊟Indicates parts not listed in any previous parts book. Prices and specifications subject to change without notice.
March 1966 Supersedes May 1965. * Indicates change or addition.

MyMopar.com

MANUAL TRANSMISSION

NOTE: All quantities are one (1) unless otherwise indicated in parenthesis.

	TRANSMISSION	2464 094	2464 098	2464 641	2464 261
		3 Speed A745	3 Speed A745	4 Speed A833	4 Speed A833
21-42-0	**TRANSMISSION REMOTE CONTROL GEARSHIFT - Cont'd**				
21-42-29	PAWL, Low and Reverse Interlock Lever, Police and Taxi	2400 715	---- ---	---- ---	---- ---
	Low and Reverse Interlock Lever	⊟2538 014	⊟2538 014	---- ---	---- ---
21-42-31	SEAL, Gearshift Lever Shaft (★) . .	---- ---	1949 350	1536 267	1536 267
21-42-42	BUSHING, Operating Lever Grommet (2)	1676 200	*1676 200	---- ---	---- ---
21-42-43	GROMMET, Operating Lever (2) . .	1941 699	*1941 699	---- ---	---- ---

NOTE: All quantities are one (1) unless otherwise indicated in parenthesis.

	TRANSMISSION	2466 163	2466 161
		3 Speed A903	3 Speed A903
21-01-0	**TRANSMISSION SETS OR PACKAGES**		
21-01-3	GASKET SET	2275 896	2196 062
21-02-0	**TRANSMISSION VENT**		
21-02-6	VENT	1139 204	1139 204
21-03-0	**TRANSMISSION CASE**		
21-03-1	CASE	2464 915	2464 915
21-03-24	PLUG, Back-Up Light Switch Hole	1139 153	1139 153
21-03-25	GASKET	1302 807	1302 807
21-04-0	**TRANSMISSION CASE EXTENSION**		
21-04-1	EXTENSION	2400 737	2400 738
21-04-2	GASKET	1949 361	1949 361
21-04-11	BUSHING, Extension	1941 887	2124 607
21-09-0	**TRANSMISSION MAIN DRIVE PINION**		
21-09-2	PINION, 21T., 18T., 23 Splines, 10 1/2" lgh., w/225 cu. in. Engine	2204 944	2204 944
21-09-5	BEARING, w/Snap RING	1633 718	1633 718
21-09-19	SLINGER, Bearing Oil	1633 669	1633 669
21-09-23	SNAP RING, Bearing, .088" thk. (★)	631 823	631 823
	.091" thk. (★)	631 824	631 824
	.094" thk. (★)	631 825	631 825
	.097" thk. (★)	640 332	640 332
21-09-25	WASHER, Bearing	631 877	631 877
21-09-29	RETAINER, Bearing	2204 491	2204 491
21-09-30	OIL SEAL, Pinion	1949 343	1949 343
21-09-31	SCREW, Retainer (★)	1920 101	1920 101
21-09-33	GASKET, Bearing Retainer	672 709	672 709

TYPE LETTERS Indicate: V - Valiant, L - Dart, R - Belvedere, W - Coronet, P - Plymouth, D - Dodge, C - Chrysler, Y - Imperial

★Indicates use as required. Numerals in parentheses ( ) refer to notes. Printed in U.S.A.

⊟Indicates parts not listed in any previous parts book. Prices and specifications subject to change without notice.

* Indicates change or addition. March 1966 Supersedes May 1965.

MyMopar.com

MANUAL TRANSMISSION

NOTE: All quantities are one (1) unless otherwise indicated in parenthesis.

	TRANSMISSION	2466 163 3 Speed A903	2466 161 3 Speed A903
21-10-0	**TRANSMISSION MAIN DRIVE GEARS**		
21-10-4	GEAR, First and Reverse, 29T., 32 Splines	2464 578	2464 578
21-10-16	GEAR, Second Speed, 24T., 24T	2538 066	2538 066
21-11-0	**TRANSMISSION REVERSE IDLER GEAR**		
21-11-1	GEAR, 15T	1853 695	1853 695
21-11-2	ROLLER, Bearing (22)	666 927	666 927
21-11-9	WASHER (2)	666 924	666 924
21-12-0	**TRANSMISSION REVERSE IDLER GEAR SHAFT**		
21-12-1	SHAFT	1635 290	1635 290
21-12-2	KEY	1635 293	1635 293
21-14-0	**TRANSMISSION CLUTCH GEAR**		
21-14-5	GEAR, 24T., 32T	2204 619	2204 619
21-14-6	SLEEVE	1676 197	1676 197
21-14-15	SPRING, Synchronizer Stop Ring	2408 163	2408 163
21-14-19	RING, Synchronizer Stop, Outer (2)	2464 839	2464 839
	Inner (2)	2400 533	2400 533
21-14-20	SNAP RING	2205 192	2205 192
21-14-21	SHIM, Synchronizer (★)	2464 724	2464 724
21-15-0	**TRANSMISSION COUNTERSHAFT GEAR**		
21-15-2	GEAR, 33T., 24T., 18T., 14T., 6 25/32" lgh.	2538 068	2538 068
21-15-33	WASHER, Thrust (2)	1633 763	1633 763
21-16-0	**TRANSMISSION MAIN SHAFT**		
21-16-3	SHAFT, 32, 32, 23, Splines, 25 1/2" lgh.	2204 616	2400 390
21-17-0	**TRANSMISSION MAIN SHAFT PILOT BEARING**		
21-17-2	ROLLER (★)	1949 834	1949 834
21-17-7	SNAP RING, Roller	601 108	601 108
21-19-0	**TRANSMISSION MAIN SHAFT BEARING**		
21-19-2	BEARING	1633 718	1633 718
21-19-15	SNAP RING, Inner, .088" thk. (★)	631 823	631 823
	Inner, .091" thk. (★)	631 824	631 824
	Inner, .095" thk. (★)	631 825	631 825
	Inner, .097" thk. (★)	640 332	640 332
	Outer, .086" thk. (★)	640 280	640 280
	Outer, .089" thk. (★)	631 809	631 809
	Outer, .092" thk. (★)	631 810	631 810
	Outer, .095" thk. (★)	640 331	640 331

TYPE LETTERS Indicate: V - Valiant, L - Dart, R - Belvedere, W - Coronet, P - Plymouth, D - Dodge, C - Chrysler, Y - Imperial

★Indicates use as required. Numerals in parentheses ( ) refer to notes. Printed in U.S.A.

⊟Indicates parts not listed in any previous parts book. Prices and specifications subject to change without notice.

March 1966 Supersedes May 1965. * Indicates change or addition.

MyMopar.com

MANUAL TRANSMISSION

NOTE: All quantities are one (1) unless otherwise indicated in parenthesis.

	TRANSMISSION	2466 163 3 Speed A903	2466 161 3 Speed A903
21-22-0	**TRANSMISSION MAIN SHAFT BEARING OIL SEAL**		
21-22-2	OIL SEAL	1854 449	1942 401
21-24-0	**TRANSMISSION COUNTERSHAFT**		
21-24-2	COUNTERSHAFT	1635 282	1635 282
21-24-22	KEY	1635 293	1635 293
21-25-0	**TRANSMISSION COUNTERSHAFT BEARING**		
21-25-2	ROLLER (44)	666 927	666 927
21-25-4	SPACER	697 812	697 812
21-25-6	WASHER or RING, Roller Thrust (2)	1630 878	1630 878
21-29-0	**TRANSMISSION CASE COVER**		
21-29-3	COVER	1949 345	1949 345
21-29-25	GASKET, Cover	1949 346	1949 346
21-34-0	**TRANSMISSION GEARSHIFT RAIL**		
21-34-42	PIN, Interlock	1949 356	1949 356
21-34-45	SLEEVE, Interlock	1949 355	1949 355
21-34-47	SPRING, Interlock Ball	2205 131	2205 131
21-39-0	**TRANSMISSION GEARSHIFT FORK**		
21-39-3	FORK, Low and Reverse	1949 351	1949 351
	Second and Direct	2125 059	2125 059
21-42-0	**TRANSMISSION REMOTE CONTROL GEARSHIFT**		
21-42-11	LEVER, Low and Reverse	1949 347	1949 347
	Second and Direct	1949 352	1949 352
21-42-16	PIN, Shaft (2)	6022 161	6022 161
21-42-23	LEVER, Operating, Second and Direct	2208 160	2464 376
	Low and Reverse, R1, W1	2464 378	---- ---
	Low and Reverse, P1	2466 747	---- ---
	Low and Reverse	---- ---	*2464 374
21-42-31	SEAL, Gearshift Lever (2)	1949 350	1949 350
21-42-42	BUSHING, Operating Lever Grommet (2)	1676 200	1676 200
21-42-43	GROMMET, Operating Lever (2)	1941 699	1941 699

TYPE LETTERS indicate: V - Valiant, L - Dart, R - Belvedere, W - Coronet, P - Plymouth, D - Dodge, C - Chrysler, Y - Imperial

★Indicates use as required. Numerals in parentheses ( ) refer to notes. Printed in U.S.A.

⊟Indicates parts not listed in any previous parts book. Prices and specifications subject to change without notice.

* Indicates change or addition. March 1966 Supersedes May 1965.

MyMopar.com

MANUAL TRANSMISSION

NOTE: All quantities are one (1) unless otherwise indicated in parenthesis.

	TRANSMISSION	2466 160 3 Speed A903
21-01-0	**TRANSMISSION SETS OR PACKAGES**	
21-01-3	GASKET SET	*2196 062
21-02-0	**TRANSMISSION VENT**	
21-02-6	VENT	*1139 204
21-03-0	**TRANSMISSION CASE**	
21-03-1	CASE	*2464 915
21-03-24	PLUG, Back-Up Light Switch Hole	*1139 153
21-03-25	GASKET	*1302 807
21-04-0	**TRANSMISSION CASE EXTENSION**	
21-04-1	EXTENSION	*2400 738
21-04-2	GASKET	*1949 361
21-04-11	BUSHING, Extension	*2124 607
21-09-0	**TRANSMISSION MAIN DRIVE PINION**	
21-09-2	PINION, 24T., 17T., 23 Splines, 10 1/2" lgh.	*2204 554
21-09-5	BEARING, w/Snap RING	*1633 718
21-09-19	SLINGER, Bearing Oil	*1633 669
21-09-23	SNAP RING, Bearing,	
	.088" thk. (★)	* 631 823
	.091" thk. (★)	* 631 824
	.094" thk. (★)	* 631 825
	.097" thk. (★)	* 640 332
21-09-25	WASHER, Bearing	* 631 877
21-09-29	RETAINER, Bearing	*2204 491
21-09-30	OIL SEAL, Pinion	*1949 343
21-09-31	SCREW, Retainer (★)	*1920 101
21-09-33	GASKET, Bearing Retainer	* 672 709
21-10-0	**TRANSMISSION MAIN DRIVE GEAR**	
21-10-4	GEAR, Sliding, First and Reverse, 29T., 32 Splines	*2464 578
21-10-16	GEAR, Second Speed, 23T., 24T.	*2538 067

TYPE LETTERS Indicate: V - Valiant, L - Dart, R - Belvedere, W - Coronet, P - Plymouth, D - Dodge, C - Chrysler, Y - Imperial

★Indicates use as required. Numerals in parentheses ( ) refer to notes. Printed in U.S.A.

⊟Indicates parts not listed in any previous parts book. Prices and specifications subject to change without notice.

March 1966 Supersedes May 1965. * Indicates change or addition.

MyMopar.com

MANUAL TRANSMISSION

NOTE: All quantities are one (1) unless otherwise indicated in parenthesis.

	TRANSMISSION	2466 160 3 Speed A903
21-11-0	**TRANSMISSION REVERSE IDLER GEAR**	
21-11-1	GEAR, 15T.	*1853 695
21-11-2	ROLLER, Bearing (22)	* 666 927
21-11-9	WASHER (2)	* 666 924
21-12-0	**TRANSMISSION REVERSE IDLER GEAR SHAFT**	
21-12-1	SHAFT	*1635 290
21-12-2	KEY	*1635 293
21-14-0	**TRANSMISSION CLUTCH GEAR**	
21-14-5	GEAR, 24T., 32T.	*2204 619
21-14-6	SLEEVE	*1676 197
21-14-15	SPRING, Synchronizer Stop Ring	*2408 163
21-14-19	RING, Synchronizer Stop, Outer (2)	*2464 839
	Inner (2)	*2400 533
21-14-20	SNAP RING	*2205 192
21-14-21	SHIM, Synchronizer (★)	*2464 724
21-15-0	**TRANSMISSION COUNTERSHAFT GEAR**	
21-15-2	GEAR, 34T., 25T., 18T., 14T.	*2538 069
21-15-33	WASHER, Thrust (2)	*1663 763
21-16-0	**TRANSMISSION MAIN SHAFT**	
21-16-3	SHAFT, 32, 32, 23, Splines 22 1/4" lgh.	*2400 390
21-17-0	**TRANSMISSION MAIN SHAFT PILOT BEARING**	
21-17-2	ROLLER (★)	*1949 834
21-17-7	SNAP RING, Roller	* 601 108
21-19-0	**TRANSMISSION MAIN SHAFT BEARING**	
21-19-2	BEARING	*1633 718
21-19-15	SNAP RING, Inner,	
	.088" thk. (★)	* 631 823
	.091" thk. (★)	* 631 824
	.095" thk. (★)	* 631 825
	.097" thk. (★)	* 640 332
	Outer, .086" thk. (★)	* 640 280
	.089" thk. (★)	* 631 809
	.092" thk. (★)	* 631 810
	.095" thk. (★)	* 640 331

TYPE LETTERS Indicate: V - Valiant, L - Dart, R - Belvedere, W - Coronet, P - Plymouth, D - Dodge, C - Chrysler, Y - Imperial

★Indicates use as required. Numerals in parentheses ( ) refer to notes. Printed in U.S.A.

⊟Indicates parts not listed in any previous parts book. Prices and specifications subject to change without notice.

* Indicates change or addition. March 1966.

MyMopar.com

MANUAL TRANSMISSION

NOTE: All quantities are one (1) unless otherwise indicated in parenthesis.

	TRANSMISSION	2466 160 3 Speed A903
21-22-0	**TRANSMISSION MAIN SHAFT BEARING OIL SEAL**	
21-22-2	OIL SEAL	*1942 401
21-24-0	**TRANSMISSION COUNTERSHAFT**	
21-24-2	COUNTERSHAFT	*1635 282
21-24-22	KEY	*1635 293
21-25-0	**TRANSMISSION COUNTERSHAFT BEARING**	
21-25-2	ROLLER (44)	* 666 927
21-25-4	SPACER	* 697 812
21-25-6	WASHER or RING, Roller Thrust (2)	*1630 878
21-29-0	**TRANSMISSION CASE COVER OR HOUSING**	
21-29-3	COVER	*1949 345
21-29-25	GASKET, Cover	*1949 346
21-34-0	**TRANSMISSION GEARSHIFT RAIL**	
21-34-42	PIN, Interlock	*1949 356
21-34-45	SLEEVE, Interlock	*1949 355
21-34-47	SPRING, Interlock Ball	*2205 131
21-39-0	**TRANSMISSION GEARSHIFT FORK - Cont'd**	
21-39-3	FORK, Low and Reverse	*1949 351
	Second and Direct	*2125 059
21-42-0	**TRANSMISSION REMOTE CONTROL GEARSHIFT**	
21-42-11	LEVER, Low and Reverse	*1949 347
	Second and Direct	*1949 352
21-42-16	PIN, Shaft (2)	*6022 161
21-42-23	LEVER, Operating, Low and Reverse	*2464 374
	Second and Direct	*2464 376
21-42-31	SEAL, Gearshift Lever Shaft (2)	*1949 350
21-42-42	BUSHING, Operating Lever Grommet (2)	*1676 200
21-42-43	GROMMET, Operating Lever (2)	*1941 699

TYPE LETTERS Indicate: V - Valiant, L - Dart, R - Belvedere, W - Coronet, P - Plymouth, D - Dodge, C - Chrysler, Y - Imperial

★Indicates use as required. Numerals in parentheses ( ) refer to notes. Printed in U.S.A.

⊟Indicates parts not listed in any previous parts book. Prices and specifications subject to change without notice.

March 1966.

MyMopar.com

* Indicates change or addition.

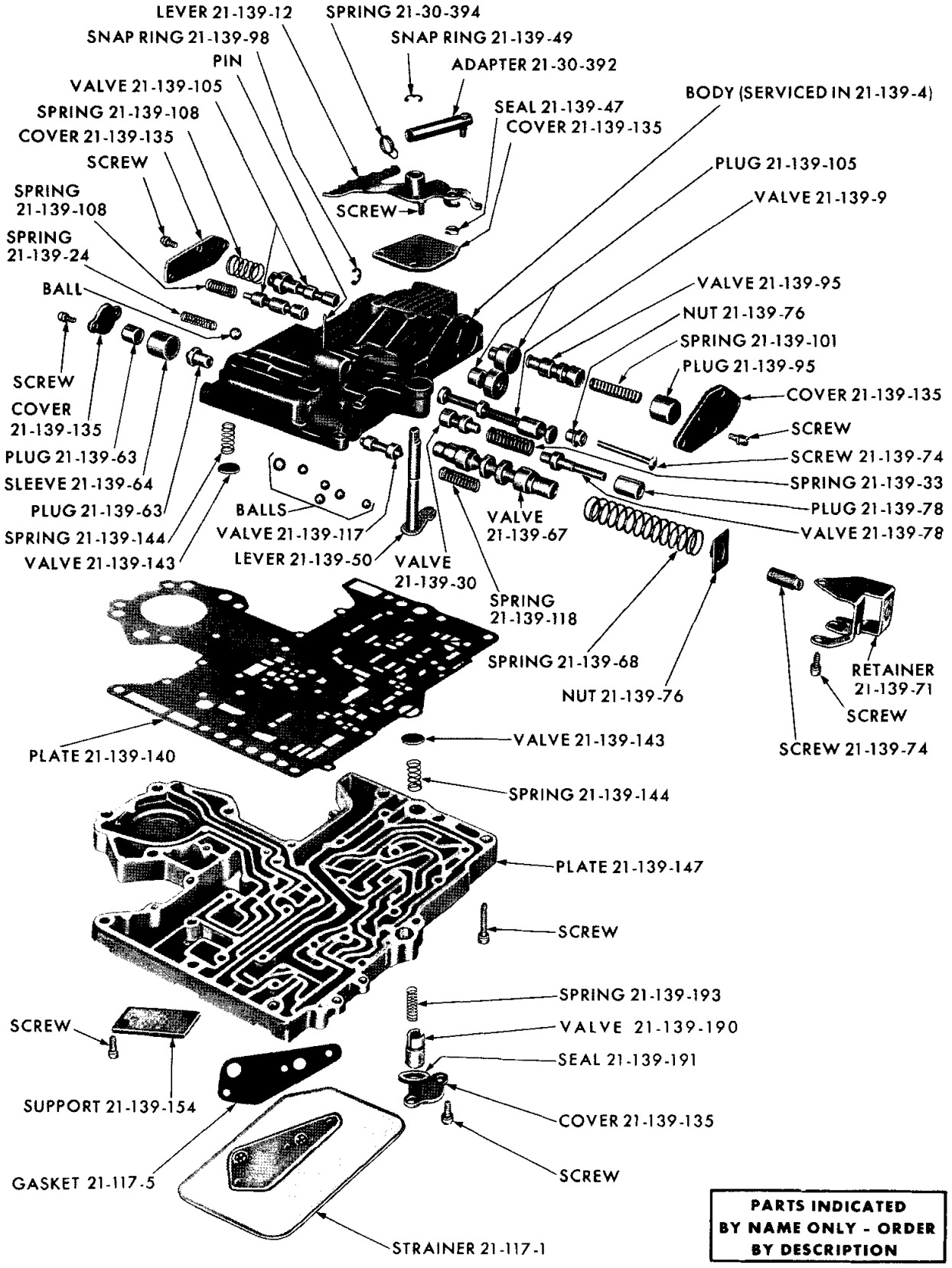

AUTOMATIC 3-SPEED TRANSMISSION VALVE BODY AND VALVES

MyMopar.com

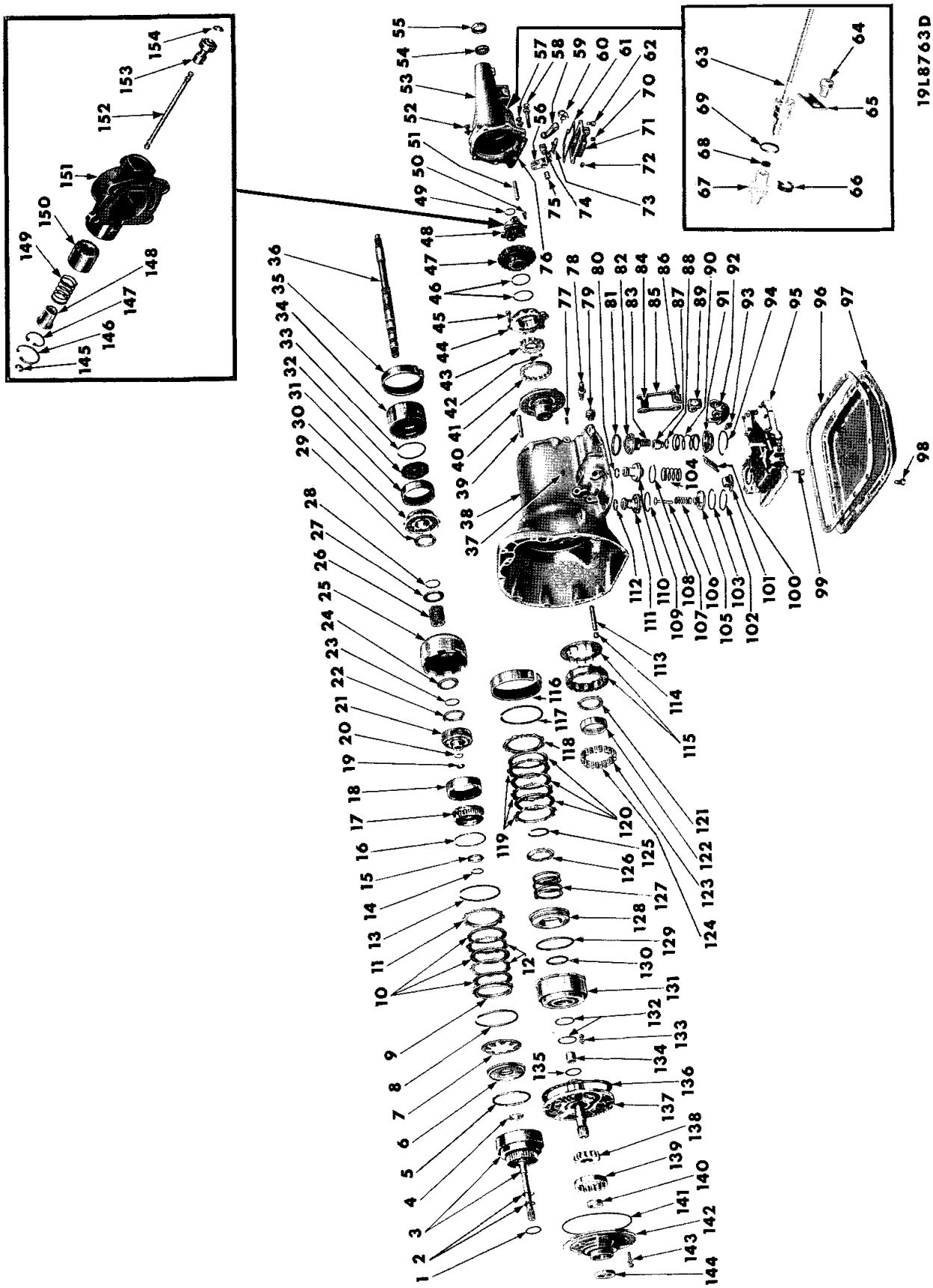

AUTOMATIC 3-SPEED TRANSMISSION - VALIANT V1-2, DART L1-2, BELVEDERE R1-2, PLYMOUTH P1, CORONET W1-2 (A904G AND A904LA)

MyMopar.com

AUTOMATIC 3-SPEED TRANSMISSION - VALIANT V1-2, DART L1-2, BELVEDERE R1-2, PLYMOUTH P1, CORONET W1-2 (A904G AND A904LA)

Ref. No.	Name	Part Type Code
1	Washer	21-133-65
2	Ring	21-129-7
3	Shaft, Input	21-129-5
4	Seal	21-133-17
5	Seal	21-133-17
6	Piston	21-133-15
7	Spring	21-133-20
8	Snap Ring	21-133-25
9	Plate	21-133-39
10	Disc	21-133-36
11	Plate	21-133-38
12	Plate	21-133-39
13	Snap Ring	21-133-43
14	Snap Ring	21-134-40
15	Washer	21-134-45
16	Snap Ring	21-134-40
17	Support	21-134-36
18	Gear	21-134-38
19	Washer	21-05-35
20	Snap Ring	21-05-19
21	Carrier, Front	21-134-5
22	Washer	21-133-48
23	Ring	21-133-46
24	Plate	21-133-47
25	Shell	21-133-42
26	Gear, Sun	21-133-40
27	Plate	21-133-47
28	Ring	21-133-46
29	Washer	21-133-48
30	Carrier, Rear	21-134-5
31	Gear	21-134-38
32	Support	21-134-36
33	Snap Ring	21-134-40
34	Drum, Reverse	21-136-65
35	Band, Reverse	21-136-30
36	Shaft, Output	21-05-1
37	Seal	21-139-47
38	Case	21-03-1
39	Shaft	21-136-49
40	Housing, Rear	21-118-40
41	Rotor, Outer (Serviced in 21-118-6)	
42	Ball	
43	Rotor, Inner (Serviced in 21-118-6)	
44	Cover	21-118-53
45	Screw	
46	Ring	21-138-38
47	Support	21-138-10
48	Housing (Serviced in 21-138-2)	
49	Snap Ring	21-138-7
50	Screw	
51	Shaft	4-10-8
52	Screw	21-04-6
53	Extension	21-04-1
54	Bearing	21-04-11
55	Oil Seal	21-05-12
56	Lever	4-10-7
57	Screw	21-04-6
58	Screw	21-04-6
59	Sprag	4-10-10
60	Spring	4-10-11
61	Gasket	4-10-16
62	Screw	
63	Cable	21-84-1
64	Screw	
65	Retainer	21-84-7
66	Clip	21-85-61
67	Pinion	21-85-5
68	Seal	21-85-56
69	Seal	21-84-28
70	Plug	
71	Cover	4-10-15
72	Plug	
73	Adapter	4-10-2
74	Spacer	4-10-9
75	Bearing	4-10-19
76	Gasket	21-04-2
77	Pin	
78	Screw	21-136-17
79	Switch	21-113-24
80	Ring	21-137-202
81	Seal	21-137-50
82	Piston, Reverse	21-137-35
83	Spring	21-137-41
84	Anchor (Serviced in 21-136-44)	
85	Link	21-136-44
86	Strut	21-136-41
87	Plug	21-137-47
88	Snap Ring	21-137-44
89	Lever, Short	21-136-47
90	Spring	21-137-53
91	Retainer	21-137-56
92	Lever, w/Stem	21-136-47
93	Screw	21-136-52
94	Snap Ring	21-137-59
95	Body, w/Transfer Plate	21-139-4
96	Gasket	21-119-5
97	Pan	21-119-3
98	Screw	21-119-3
99	Screw	
100	Strut	21-136-15
101	Lever	21-136-20
102	Snap Ring	21-137-19
103	Ring	21-137-8
104	Spring	21-137-205
105	Guide	21-137-13
106	Spring	21-137-22
107	Rod	21-137-11
108	Ring	21-137-202
109	Ring	21-137-8
110	Piston, Accumulator	21-137-200
111	Piston, Kickdown	21-137-5
112	Ring	21-137-8
113	Shaft	21-136-23
114	Plug	
115	Retainer and Cam	21-136-228
116	Band, Kickdown	21-136-5
117	Snap Ring	21-133-43
118	Plate	21-133-39
119	Plate	21-133-38
120	Disc	21-133-36
121	Washer	21-136-237
122	Race	21-136-232
123	Spring	21-136-236
124	Roller	21-136-235
125	Snap Ring	21-133-43
126	Retainer	21-133-22
127	Spring	21-133-20
128	Piston	21-133-15
129	Seal	21-133-17
130	Seal	21-133-17
131	Retainer, Front	21-133-7
132	Ring	21-129-13
133	Screw	
134	Bushing	21-129-23
135	Washer	21-133-65
136	Gasket	21-129-24
137	Shaft, Reacting, w/Support	21-129-10
138	Rotor, Inner (Serviced in 21-118-6)	
139	Rotor, Outer (Serviced in 21-118-6)	
140	Bushing	21-118-47
141	Oil Seal	21-118-45
142	Housing, Front	21-118-40
143	Screw	21-118-55
144	Oil Seal	21-118-42
145	Snap Ring	21-138-29
146	Snap Ring	21-138-19
147	Snap Ring	21-138-19
148	Weight	21-138-13
149	Spring	21-138-15
150	Weight	21-138-13
151	Body (Serviced in 21-138-2)	
152	Shaft	21-138-26
153	Valve	21-138-23
154	Snap Ring	21-138-29

PARTS INDICATED BY NAME ONLY - ORDER BY DESCRIPTION

MyMopar.com

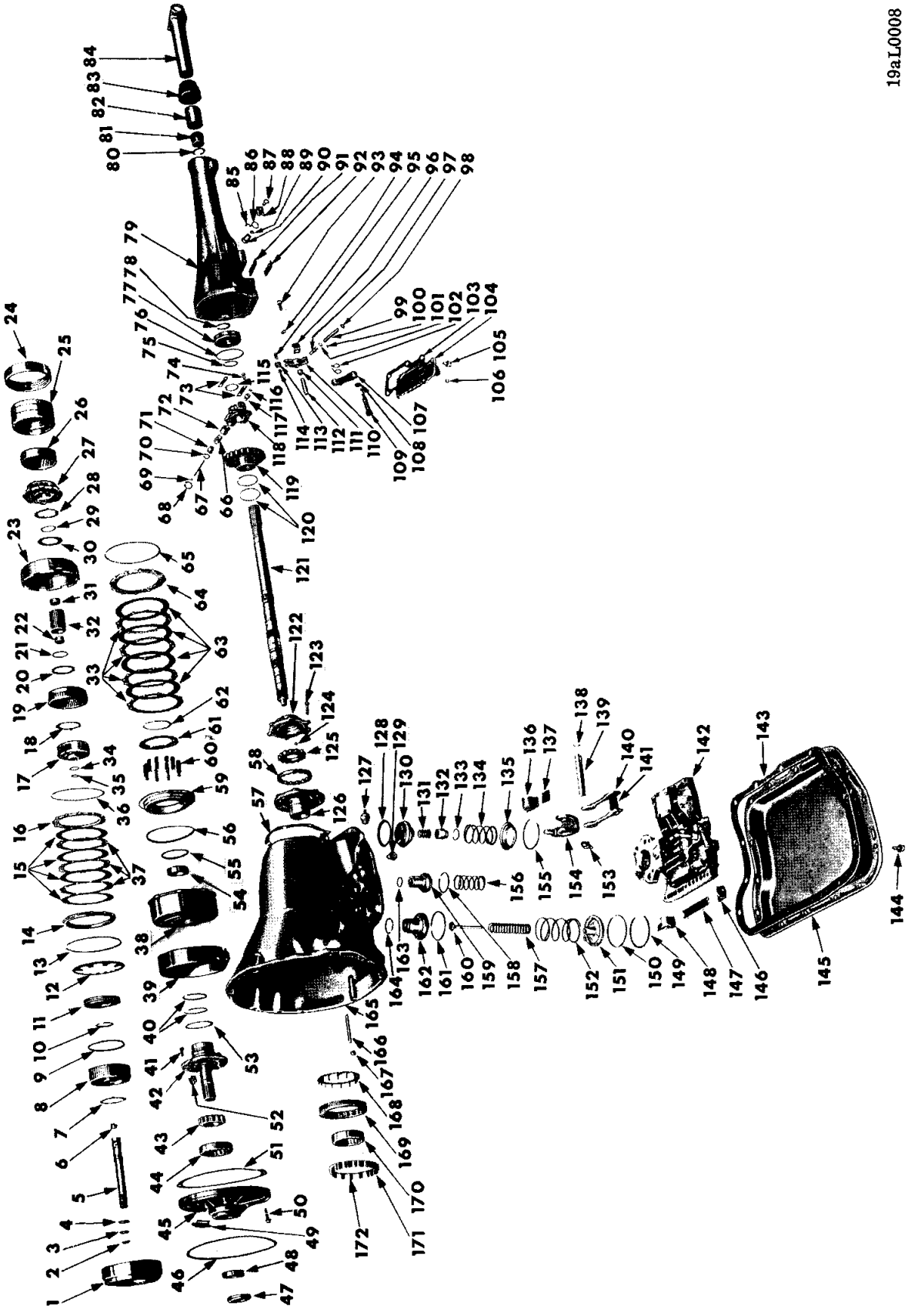

AUTOMATIC 3-SPEED TRANSMISSION - PLYMOUTH P2, DODGE D2, CHRYSLER C1-2-3, IMPERIAL Y1, PLYMOUTH P1, CORONET W1 POLICE AND TAXI

MyMopar.com

AUTOMATIC 3-SPEED TRANSMISSION - PLYMOUTH P2, DODGE D2, CHRYSLER C1-2-3, IMPERIAL Y1, PLYMOUTH P1, CORONET W1 POLICE AND TAXI

Ref. No.	Name	Part Type Code
1	Retainer, Rear Clutch	21-133-7
2	Ring	21-129-7
3	Ring	21-129-7
4	Ring	21-133-25
5	Shaft, Input	21-129-5
6	Bushing	21-129-6
7	Washer	21-133-65
8	Retainer, Rear Clutch Piston	21-133-7
9	Seal	21-133-17
10	Seal	21-133-17
11	Piston	21-133-15
12	Spring	21-133-20
13	Ring	21-133-25
14	Plate	21-133-39
15	Disc	21-133-36
16	Plate	21-133-39
17	Carrier	21-134-5
18	Washer	21-134-30
19	Gear	21-134-38
20	Washer	21-133-48
21	Ring	21-133-46
22	Bushing (Serviced in 21-133-40)	
23	Shell	21-133-42
24	Band, Reverse	21-136-30
25	Drum, Reverse	21-136-65
26	Gear	21-134-38
27	Carrier	21-134-5
28	Washer	21-134-30
29	Ring	21-133-46
30	Plate	21-133-47
31	Bushing (Serviced in 21-133-40)	
32	Gear	21-133-40
33	Plate	21-133-38
34	Ring	21-05-19
35	Washer	21-05-35
36	Ring	21-133-43
37	Plate	21-133-38
38	Retainer, Front Clutch	21-133-7
39	Band, Kickdown	21-136-5
40	Ring	21-129-13
41	Bolt	
42	Shaft, Reaction	21-129-10
43	Rotor (Serviced in 21-118-6)	
44	Rotor (Serviced in 21-118-6)	
45	Housing	21-118-40
46	Seal	21-118-45
47	Seal	21-118-42
48	Bushing	21-118-47
49	Shield	21-118-57
50	Bolt	21-118-55
51	Gasket	21-118-54
52	Baffle	21-129-11
53	Washer	21-133-65
54	Bushing	21-133-10
55	Seal	21-133-17
56	Seal	21-133-17
57	Gasket	21-04-2
58	Rotor	21-118-7
59	Piston	21-133-15
60	Spring	21-133-20
61	Retainer	21-133-22
62	Ring	21-133-43
63	Disc	21-133-36
64	Plate	21-133-39
65	Ring	21-133-43
66	Spring	21-138-15
67	Shaft	21-138-26
68	Ring	21-138-19
69	Ring	21-138-29
70	Ring	21-138-19
71	Weight	21-138-13
72	Weight	21-138-13
73	Lock	21-138-21
74	Bolt	
75	Ring	21-05-8
76	Ring	21-05-8
77	Bearing	21-05-2
78	Ring	21-05-8
79	Extension	21-04-1
80	Ring	21-05-18
81	Seal	21-05-12
82	Bushing	21-04-11
83	Seal	21-05-12
84	Yoke	16-14-1
85	Clip	21-85-61
86	Seal	21-84-28
87	Bolt	
88	Clamp	21-84-7
89	Seal	21-85-56
90	Pinion	21-85-5
91	Gasket	21-04-2
92	Cover	21-04-8
93	Screw	21-04-6
94	Plug	
95	Shaft (Serviced in 4-10-7)	
96	Spacer	4-10-9
97	Spring	4-10-3
98	Spring	4-10-3
99	Adapter	4-10-2
100	Pin	
101	Washer	4-10-4
102	Spring	4-10-11
103	Gasket	4-10-16
104	Cover	4-10-15
105	Screw	
106	Plug	
107	Sprag	4-10-10
108	Washer	21-04-18
109	Screw	21-04-6
110	Lever	4-10-7
111	Bearing (Serviced in 4-10-7)	
112	Shaft	4-10-8
113	Roller	4-10-17
114	Bearing	4-10-19
115	Ring	21-138-7
116	Ring	21-138-29
117	Valve	21-138-23
118	Housing (Serviced in 21-138-2)	
119	Support	21-138-10
120	Ring	21-138-38
121	Shaft, Output	21-05-1
122	Cover	21-118-53
123	Screw	
124	Ball	
125	Rotor (Serviced in 21-118-6)	
126	Housing	21-118-40
127	Switch	21-133-24
128	Ring	21-137-50
129	Screw	21-136-17
130	Piston	21-137-35
131	Spring	21-137-41
132	Plug	21-137-47
133	Ring	21-137-44
134	Spring	21-137-53
135	Retainer	21-137-56
136	Lever	21-136-47
137	Strut	21-136-41
138	Seal	21-136-55
139	Shaft	21-136-49
140	Link	21-136-44
141	Anchor	21-136-41
142	Body, w/Plate	21-139-4
143	Gasket	21-119-5
144	Bolt	
145	Pan	21-119-3
146	Anchor	21-136-15
147	Strut	21-136-15
148	Lever	21-136-20
149	Ring	21-137-19
150	Ring	21-137-8
151	Guide	21-137-13
152	Spring	21-137-22
153	Screw	21-136-52
154	Lever	21-136-47
155	Ring	21-137-59
156	Spring	21-137-205
157	Spring	21-137-22
158	Ring	21-137-202
159	Piston	21-137-200
160	Rod	21-137-11
161	Ring	21-137-8
162	Piston	21-137-5
163	Ring	21-137-202
164	Ring	21-137-8
165	Case	21-03-1
166	Shaft	21-136-23
167	Plug	
168	Retainer	21-136-233
169	Cam	21-136-231
170	Race	21-136-232
171	Spring	21-136-236
172	Roller	21-136-235

PARTS INDICATED BY NAME ONLY - ORDER BY DESCRIPTION

MyMopar.com

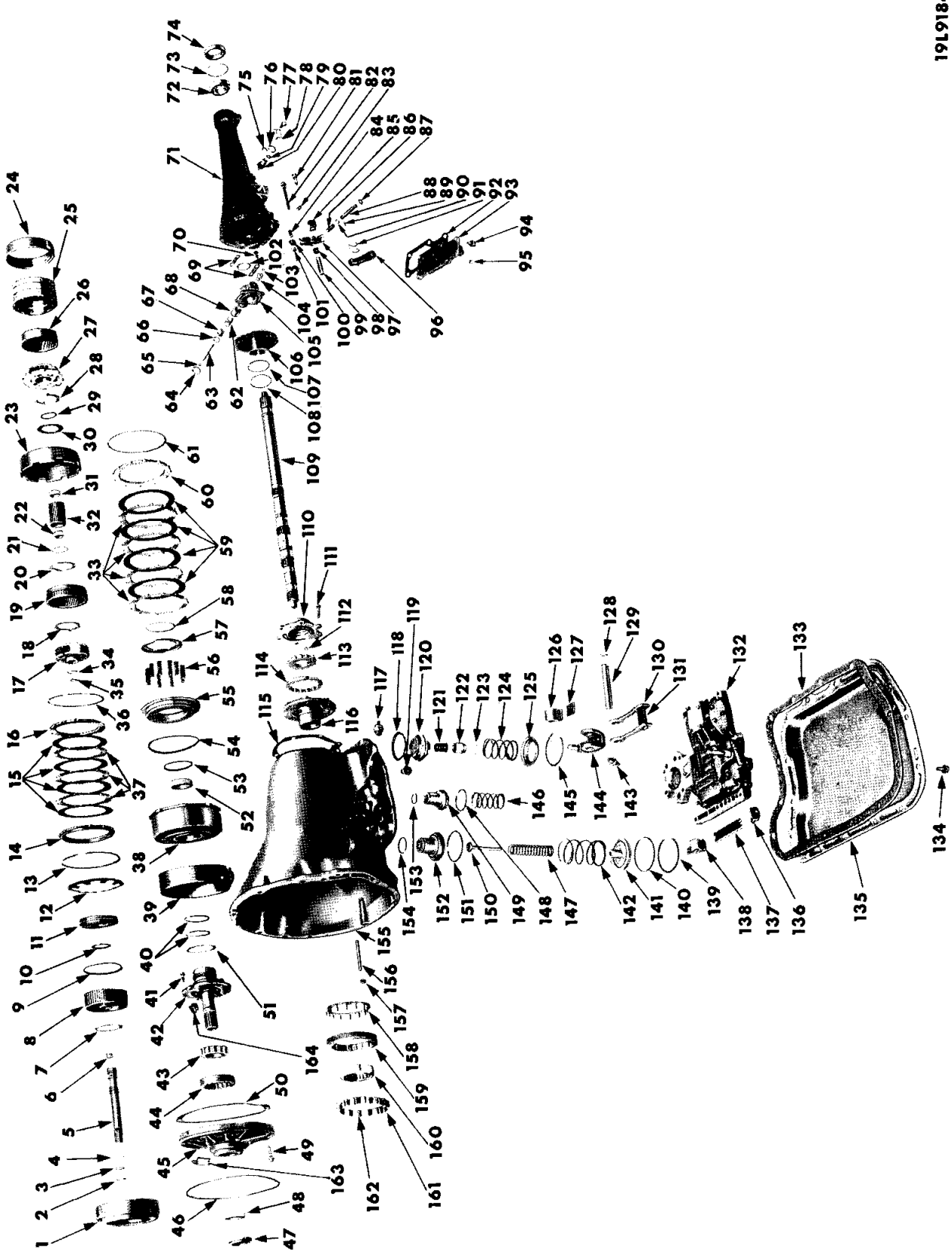

AUTOMATIC 3-SPEED TRANSMISSION - IMPERIAL (A727B)

MyMopar.com

AUTOMATIC 3-SPEED TRANSMISSION - IMPERIAL (A727B)

Ref. No.	Name	Part Type Code
1	Retainer, Rear Clutch	21-133-7
2	Ring	21-129-7
3	Ring	21-129-7
4	Ring	21-133-25
5	Shaft, Input	21-129-5
6	Bushing	21-129-6
7	Washer	21-133-65
8	Retainer, Rear Clutch Piston	21-133-7
9	Seal	21-133-17
10	Seal	21-133-17
11	Piston	21-133-15
12	Spring	21-133-20
13	Ring	21-133-25
14	Plate	21-133-39
15	Disc	21-133-36
16	Plate	21-133-39
17	Carrier	21-134-5
18	Washer	21-134-30
19	Gear	21-134-38
20	Washer	21-133-48
21	Ring	21-133-46
22	Bushing (Serviced in 21-133-40)	
23	Shell	21-133-42
24	Band, Reverse	21-136-30
25	Drum, Reverse	21-136-65
26	Gear	21-134-38
27	Carrier	21-134-5
28	Washer	21-134-30
29	Ring	21-133-46
30	Plate	21-133-47
31	Bushing (Serviced in 21-133-40)	
32	Gear	21-133-40
33	Plate	21-133-38
34	Ring	21-05-19
35	Washer	21-05-35
36	Ring	21-133-43
37	Plate	21-133-38
38	Retainer, Front Clutch	21-133-7
39	Band, Kickdown	21-136-5
40	Ring	21-129-13
41	Bolt	
42	Shaft, Reaction	21-129-10
43	Rotor (Serviced in 21-118-6)	
44	Rotor (Serviced in 21-118-6)	
45	Housing	21-118-40
46	Seal	21-118-45
47	Seal	21-118-42
48	Bushing	21-118-47
49	Bolt	21-118-55
50	Gasket	21-118-54
51	Washer	21-133-65
52	Bushing	21-133-10
53	Seal	21-133-17
54	Seal	21-133-17
55	Piston	21-133-15
56	Spring	21-133-20
57	Retainer	21-133-22
58	Ring	21-133-43
59	Disc	21-133-36
60	Plate	21-133-39
61	Ring	21-133-43
62	Spring	21-138-15
63	Shaft	21-138-26
64	Ring	21-138-19
65	Ring	21-138-29
66	Ring	21-138-19
67	Weight	21-138-13
68	Weight	21-138-13
69	Lock	21-138-21
70	Bolt	
71	Extension	21-04-1
72	Bearing	21-04-11
73	Ring	21-04-12
74	Seal	21-05-12
75	Clip	21-85-61
76	Seal	21-84-28
77	Bolt	
78	Clamp	21-84-7
79	Seal	21-85-56
80	Pinion	21-85-5
81	Screw	21-04-6
82	Screw	21-04-6
83	Plug	
84	Shaft (Serviced in 4-10-7)	
85	Spacer	4-10-9
86	Spring	4-10-3
87	Spring	4-10-3
88	Adapter	4-10-2
89	Pin	
90	Washer	4-10-4
91	Spring	4-10-11
92	Gasket	4-10-16
93	Cover	4-10-15
94	Screw	
95	Plug	
96	Sprag	4-10-10
97	Lever	4-10-7
98	Bearing (Serviced in 4-10-7)	
99	Shaft	4-10-8
100	Roller	4-10-17
101	Bearing	4-10-19
102	Ring	21-138-7
103	Ring	21-138-29
104	Valve	21-138-23
105	Housing (Serviced in 21-138-2)	
106	Support	21-138-10
107	Ring	21-138-38
108	Ring	21-138-38
109	Shaft, Output	21-05-1
110	Cover	21-118-53
111	Screw	
112	Ball	
113	Rotor (Serviced in 21-118-6)	
114	Rotor (Serviced in 21-118-6)	
115	Gasket	21-04-2
116	Housing	21-118-40
117	Switch	21-113-24
118	Ring	21-137-50
119	Screw	21-136-17
120	Piston	21-137-35
121	Spring	21-137-41
122	Plug	21-137-47
123	Ring	21-137-44
124	Spring	21-137-53
125	Retainer	21-137-56
126	Lever	21-136-47
127	Strut	21-136-41
128	Seal	21-136-55
129	Shaft	21-136-49
130	Link	21-136-44
131	Anchor (Serviced in 21-136-44)	
132	Body, w/Plate	21-139-4
133	Gasket	21-119-5
134	Bolt	
135	Pan	21-119-3
136	Anchor	21-136-15
137	Strut	21-136-15
138	Lever	21-136-20
139	Ring	21-137-19
140	Ring	21-137-8
141	Guide	21-137-13
142	Spring	21-137-22
143	Screw	21-136-52
144	Lever	21-136-47
145	Ring	21-137-59
146	Spring	21-137-205
147	Spring	21-137-22
148	Ring	21-137-202
149	Piston	21-137-200
150	Rod	21-137-11
151	Ring	21-137-8
152	Piston	21-137-5
153	Ring	21-137-202
154	Ring	21-137-8
155	Case	21-03-1
156	Shaft	21-136-23
157	Plug	
158	Retainer	21-136-233
159	Cam	21-136-231
160	Race	21-136-232
161	Spring	21-136-236
162	Roller	21-136-235
163	Shield	21-118-57
164	Baffle	21-129-11

PARTS INDICATED BY NAME ONLY - ORDER BY DESCRIPTION

MyMopar.com

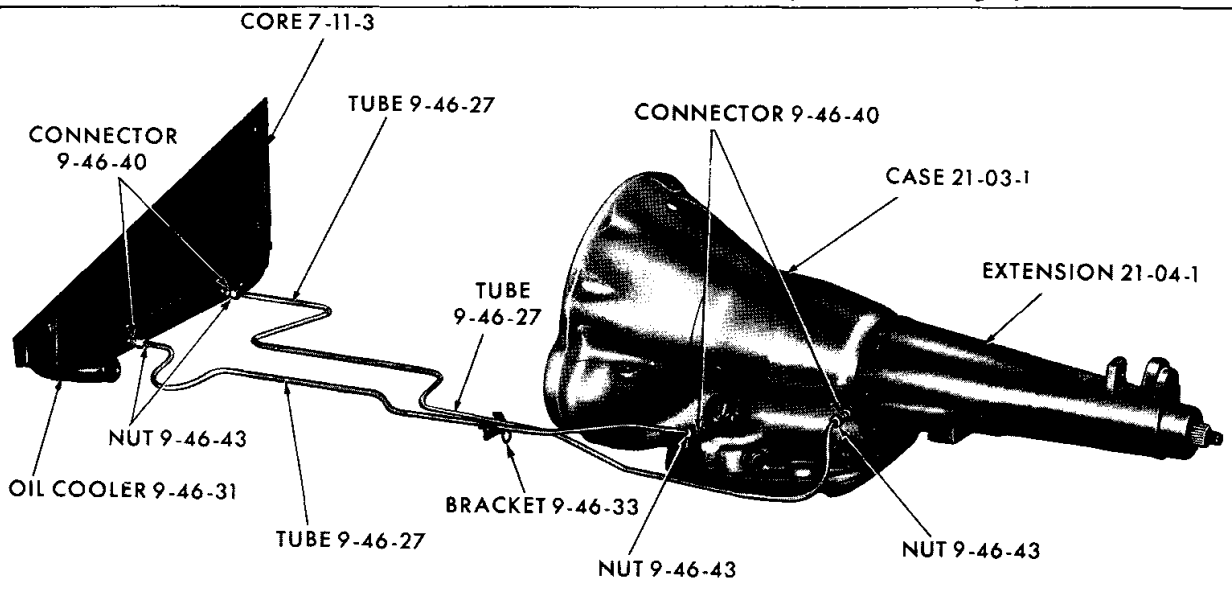

19x9340B

AUTOMATIC TRANSMISSION OIL COOLER SYSTEM

NOTES

MyMopar.com

AUTOMATIC TRANSMISSION

NOTE: Transmission Number and Serial Number can be Found on Transmission Oil Pan Rail.

21-02-0 TRANSMISSION

NOTE: For Transmission Component Parts see Charts Beginning on Page 21-40.

CODE	PART NAME AND DESCRIPTION	CYL	PER CAR	VALIANT / DART	PLYMOUTH BELVEDERE / DODGE CORONET	PLYMOUTH FURY / DODGE POLARA / CHRYSLER	IMPERIAL
21-02-1	TRANSMISSION, w/170 cu. in. Engine, A904G	6	1	2466 120			
	Heavy Duty, A904G	6	1	2466 119			
	w/273 cu. in. Engine, Std., A904LA	8	1	*2466 123(3)			
	w/273 cu. in. Engine, Std., A904LA	8	1	*2538 350(4)			
	w/273 cu. in. Engine, w/4 Barrel Carburetor, w/Special Cam, A904 LA (Cancelled - Service Component Parts)	8	1	*2466 144			
	w/273 cu. in. Engine, w/4 Barrel Carburetor, w/Special Cam, A904LA	8	1	*2538 351			
	w/225 cu. in. Engine, A904G	6	1	*2466 119			
	R1, W1, P1, A904G	6	1	---- ---	2466 118	2466 118	
	R2, W2, w/273 cu. in. Engine, A904LA (Cancelled - Service Component Parts)	8	1	---- ---	*2466 122		
	R2, W2, w/273 cu. in. Engine, A904LA	8	1	---- ---	*2538 353		
	R1, W1, P1, Police and Taxi, A727A	6	1	---- ---	2466 134(1)	2466 134(1)	
	R1, W1, P1, Police and Taxi, A727A	6	1	---- ---	2466 152(2)	*2466 152(2)	
	P2 Police and Taxi, R2, W2, Police, w/318 cu. in. Engine, A727A	8	1	---- ---	2466 134(1)	2466 134(1)	
	P2 Police and Taxi, R2, W2, Police, w/318 cu. in. Engine, A727A	8	1	---- ---	2466 152(2)	2466 152(2)	
	R2, W2, Police and Taxi, w/273 cu. in. Engine, A727A	8	1	---- ---	2466 135(1)		
	R2, W2, Police and Taxi, w/273 cu. in. Engine, A727A	8	1	---- ---	2466 151(2)		
	P2, R2, W2, D2-L, w/318 cu. in. Engine, A727A	8	1	---- ---	2466 111(1)	2466 111(1)	
	P2, R2, W2, D2-L, w/318 cu. in. Engine, A727A	8	1	---- ---	2466 166(2)	2466 166(2)	
	R2, W2, w/361 cu. in. Engine, w/2 Barrel Carburetor, A727B	8	1	---- ---	2466 112(1)		
	R2, W2, w/361 cu. in. Engine, w/2 Barrel Carburetor, A727B	8	1	---- ---	2466 147(2)		
	P2 w/383 cu. in. Engine, A727B	8	1	---- ---	---- ---	2466 112(1)	
	P2 w/383 cu. in. Engine, A727B	8	1	---- ---	---- ---	2466 147(2)	
	D2 w/383 and 413 cu. in. Engine, A727B	8	1	---- ---	---- ---	2466 112(1)	
	D2 w/383 and 413 cu. in. Engine, A727B	8	1	---- ---	---- ---	2466 147(2)	
	C1, C2, w/383 cu. in. Engine, C3 w/413 cu. in. Engine w/4 Barrel Carburetor, A727B	8	1	---- ---	---- ---	2466 112(1)	
	C1, C2, w/383 cu. in. Engine, C3 w/413 cu. in. Engine w/4 Barrel Carburetor, A727B	8	1	---- ---	---- ---	2466 147(2)	
	R2, W2, P2, D2, w/383 cu. in. Engine, w/4 Barrel Carburetor, Police, A727B	8	1	---- ---	2466 113(1)	2466 113(1)	
	R2, W2, P2, D2, w/383 cu. in. Engine, w/4 Barrel Carburetor, Police, A727B	8	1	---- ---	2466 148(2)	2466 148(2)	
	W2, P2, D2, w/426 cu. in. Engine, Std., A727B	8	1	---- ---	2466 113(1)	2466 113(1)	

NOTE 1: UP TO Trans. Ser. No. 1589110. NOTE 2: AFTER Trans. Ser. No. 1589110.
NOTE 3: UP TO Trans. Ser. No. 1878582. NOTE 4: AFTER Trans. Ser. No. 1878582.

TYPE LETTERS Indicate: V - Valiant, L - Dart, R - Belvedere, W - Coronet, P - Plymouth, D - Dodge, C - Chrysler, Y - Imperial

★Indicates use as required. Numerals in parentheses ( ) refer to notes. Printed In U.S.A.
⊟Indicates parts not listed in any previous parts book. Prices and specifications subject to change without notice.
* Indicates change or addition. March 1966 Supersedes May 1965.

MyMopar.com

AUTOMATIC TRANSMISSION

CODE	PART NAME AND DESCRIPTION	CYL	PER CAR	VALIANT / DART	PLYMOUTH BELVEDERE / DODGE CORONET	PLYMOUTH FURY / DODGE POLARA / CHRYSLER	IMPERIAL
21-02-0	**TRANSMISSION - Cont'd**						
21-02-1	TRANSMISSION - Cont'd						
	W2, P2, D2, w/426 cu. in. Engine, Std., A727B	8	1	---- ---	2466 148(2)	2466 148(2)	
	C2, C3, w/413 cu. in. Engine, C2-300L, w/4 Barrel Carburetor, w/Special Cam, A727B	8	1	---- ---	---- ---	2466 113(1)	
	C2, C3, w/413 cu. in. Engine, C2-300L, w/4 Barrel Carburetor, w/Special Cam, A727B	8	1	---- ---	---- ---	2466 148(2)	
	R2, W2, w/426 cu. in. Engine, Hemispherical, A727B	8	1	---- ---	2466 164		
	A727B (Cancelled-Service Components Parts)		1	---- ---	---- ---	---- ---	2466 125
	A727B		1	---- ---	---- ---	---- ---	2466 149
21-03-0	**TRANSMISSION CASE**						
21-03-2	PLATE, Adapter, Police and Taxi	6	1	---- ---	2125 013	2125 013	
21-03-6	COVER, Torque Converter	6	1	1949 767	1949 767	1949 767	
		8	1	2464 550			
	Police and Taxi	6	1	---- ---	2125 057	2125 057	
	w/361, 383 and 426 cu. in. Engine	8	1	---- ---	1942 248	1942 248	1942 248
	w/273 cu. in. Engine, w/A904LA Trans.	8	1	---- ---	2464 550		
	w/273 cu. in. Engine, w/A727A Trans.	8	1	---- ---	2466 230		
	P, D-L, w/318 cu. in. Engine	8	1	---- ---	2125 057	2125 057	
21-03-7	COVER, Torque Converter Drain	8	1	2464 551			
	w/273 cu. in. Engine, w/A904LA Trans.	8	1	---- --	2464 551		
	Police and Taxi	6	1	---- ---	2466 830	2466 830	
	w/273 cu. in. Engine, w/A727A Trans.	8	1	---- ---	2204 728		
	R, W, P, D-L, w/318 cu. in. Engine	8	1	---- ---	2204 728	2204 728	
21-03-23	SCREW, Case Cover		★	6023 092	6023 092	6023 092	6023 092
	Case to Cylinder Block		★	6023 187	6023 187	6023 187	6023 187
	Cylinder Block to Case, Left Side		1	6024 862	6024 862	6024 862	
	Strut to Cylinder Block		★	6023 143	6023 143	6023 143	
	Adapter Plate to Case, Police and Taxi	6	3	---- ---	6024 863	6024 863	
	Case to Adapter Plate, Police and Taxi	6	4	---- ---	6023 187	6023 187	
21-03-28	BRACKET or STRUT, Case to Cylinder Block, Left Side	6	1	1949 701	1949 701	1949 701	
	R2, W2, w/273 cu. in. Engine, A904LA Trans., Left Side	8	1	2466 009	2466 009		
	Right Side	8	1	2466 338			
	w/273 cu. in. Engine, A904LA Trans., Right Side	8	1	---- ---	2204 702		
	w/273 cu. in. Engine, A727A Trans., Left Side	8	1	---- ---	2466 009		
	R, W, P, D2-L, w/318 cu. in. Engine, Left Side	8	1	---- ---	*2466 009	*2466 009	
	w/273 cu. in. Engine, A727A Trans., Right Side	8	1	---- ---	2204 702		
	R, W, P, D2-L, w/318 cu. in. Engine, Right Side	8	1	---- ---	*2204 702	*2204 702	

NOTE 1: UP TO Trans. Ser. No. 1589110. NOTE 2: AFTER Trans. Ser. No. 1589110.

TYPE LETTERS Indicate: V - Valiant, L - Dart, R - Belvedere, W - Coronet, P - Plymouth, D - Dodge, C - Chrysler, Y - Imperial

★Indicates use as required. Numerals in parentheses ( ) refer to notes. Printed in U.S.A.

⊟Indicates parts not listed in any previous parts book. Prices and specifications subject to change without notice.

March 1966 Supersedes May 1965. * Indicates change or addition.

MyMopar.com

AUTOMATIC TRANSMISSION

CODE	PART NAME AND DESCRIPTION	CYL	PER CAR	VALIANT / DART	PLYMOUTH BELVEDERE / DODGE CORONET	PLYMOUTH FURY / DODGE POLARA / CHRYSLER	IMPERIAL
21-03-0	**TRANSMISSION CASE - Cont'd**						
21-03-29	SHIELD, Case to Starter Motor, Police and Taxi, P	6	1	---- ---	2125 014	2125 014	
21-03-40	PIN, Adapter Plate Dowel, Police and Taxi	6	2	---- ---	1533 923	1533 923	
21-30-0	**TRANSMISSION GEARSHIFT CONTROLS**						
21-30-2	LEVER, Column Gearshift		1	2467 850	2467 850	2467 850	2467 850
	w/426 Maximum Performance, w/o Back-Up Lights	8	1	---- ---	2643 658		
	PIN, Lever		1	152 233	152 233	152 233	152 233
21-30-6	KNOB, Column Shift, w/o Console, Chrome		1	2530 828	2530 828	2530 828	
	w/Console, Black		1	4407 VX9	4407 VX9	4407 VX9	
			1	---- ---	---- ---	---- ---	2530 826
	SCREW, Lever Knob Set, w/Console		1	140 874	140 874	140 874	
21-30-11	GATE, Gearshift Lever		1	2467 857	2467 857	2467 857	2467 857
21-30-15	LENS, Gearshift, Selector, w/HOUSING, w/Shift Letters P, R, N, D, 2, 1, w/Console		1	*2580 256			
	w/Console, P, D	8	1	---- ---	2496 912	2496 912	
	LENS, Instrument Panel, w/Name "DODGE", w/Console, D		1	---- ---	---- ---	2571 081	
	w/Console, C1, C2, C3		1	---- ---	---- ---	2581 446	
21-30-19	COVER, Column Gearshift Indicator Opening, w/o Shift Letters P, R, N, D, 2, 1, w/Console, P		1	---- ---	---- ---	*2587 807	
21-30-21	DIAL, Column Gearshift, w/o Console		1	2530 242	2530 242		
	w/426 Maximum Performance, w/o Back-Up Lights, w/o Console	8	1	---- ---	2643 655		
	DIAL PACKAGE, Indicator		1	---- ---	---- ---	---- ---	2580 892
21-30-22	PIN, Column Gearshift Lever, w/o Console		1	2467 866	2467 866	2467 866	2467 866
21-30-23	POINTER, Column Gearshift Dial, w/o Console		1	2530 244	2530 244		
	INDICATOR, w/BRACKETS, SPRING, GASKET, BACK DIAL, SHAFT and POINTER, P1, P2-L P2-M, P2-H, w/o Console		1	---- ---	---- ---	2497 724	
	INDICATOR, D2-L, D2-H, w/o Console		1	---- ---	---- ---	2497 625	
	INDICATOR, C1, C2-M, C3, w/o Console		1	---- ---	---- ---	2497 706	
	INDICATOR PACKAGE		1	---- ---	---- ---	---- ---	2580 891
21-30-24	BRACKET, w/STUD, Column Gearshift Tube Indicator, w/o Console, P, D		1	---- ---	---- ---	*2530 245	
	BRACKET, Indicator, w/o Console, C1, C2-M, C3		1	---- ---	---- ---	2530 536	
	BRACKET, Indicator		1	---- ---	---- ---	---- ---	2530 591
	BRACKET, Indicator Locking		1	---- ---	---- ---	---- ---	2530 587
	NUT, Stud		1	---- ---	---- ---	*6023 202	
21-30-26	RETAINER, Column Gearshift Dial, w/o Console		1	2530 243	2530 243		
21-30-28	SOCKET, Selector Light, w/Console		1	1753 632	1753 632	1753 632	
	Gearshift Indicator Lamp, D2, w/o Console		1	---- ---	---- ---	2097 003	

TYPE LETTERS Indicate: V - Valiant, L - Dart, R - Belvedere, W - Coronet, P - Plymouth, D - Dodge, C - Chrysler, Y - Imperial

★Indicates use as required. Numerals in parentheses ( ) refer to notes. Printed in U.S.A.

⊟Indicates parts not listed in any previous parts book. Prices and specifications subject to change without notice.

• Indicates change or addition. March 1966 Supersedes May 1965.

MyMopar.com

AUTOMATIC TRANSMISSION

21-30-0 TRANSMISSION GEARSHIFT CONTROLS - Cont'd

CODE	PART NAME AND DESCRIPTION	CYL	PER CAR	VALIANT / DART	PLYMOUTH BELVEDERE / DODGE CORONET	PLYMOUTH FURY / DODGE POLARA / CHRYSLER	IMPERIAL
	LAMP, Column Gearshift Indicator, w/CABLE, w/o Console		1	2580 072	2580 072		
21-30-30	SPRING, Gearshift Indicator		1	---- ---	---- ---	---- ---	2497 771
	Gearshift Indicator Damping		1	---- ---	---- ---	---- ---	2580 882
21-30-33	CONTACT, Lamp Socket Cable, w/Console		1	2256 966	2256 966	2256 966	
21-30-43	SPRING, Column Gearshift Lever Pivot, 25/64" lgh.		1	2643 649	2643 649	2643 649	2643 649
21-30-45	WASHER, Gearshift Selector Indicator Link Mounting Spring, P, D		1	---- ---	---- ---	* 644 069	
21-30-49	LINK, Gearshift Selector Indicator, P, D2, w/o Console		1	---- ---	---- ---	⊟2497 614	
	SCREW, Link Mounting Shoulder		1	---- ---	---- ---	*6024 827	
	NUT and WASHER, Link Mounting		1	---- ---	---- ---	*6023 214	
	WASHER, Spring		1	---- ---	---- ---	* 644 069	
21-30-53	LEVER, Gearshift Indicator, w/GROMMET, w/o Console, C1, C2-M, C3		1	---- ---	---- ---	2497 735	
21-30-57	GROMMET, Indicator Lever Shaft, w/o Console, P, C1, C2-M C3		1	---- ---	---- ---	2497 613	
21-30-58	LENS, Instrument Panel Indicator, D2-L, D2-M, D2-H, Plastic, w/Shift Letters	8	1	---- ---	---- ---	*2571 080	
21-30-64	CABLE, Indicator Actuating		1	---- ---	---- ---	---- ---	2497 715
21-30-69	INSULATOR, Column Gearshift Cable		1	---- ---	---- ---	---- ---	2530 590
21-30-100	SPRING, Column Gearshift Lever, 1/4" O.D.		1	2460 533	2460 533	2460 533	2460 533
	Column Gearshift Lever Sprag, 1/2" O.D.		1	2460 534	2460 534	2460 534	2460 534
21-30-347	DAMPER, Gearshift Control Selector Lever Guide Pin, w/Console, V1-P, V2-P, L1-P, L2-P, R2-P, W2-P, P2-P, D2-L, D2-P, C		1	1536 268	1536 268	1536 268	
21-30-365	CABLE, Control, w/o Console		1	2534 413	2534 413	*2533 784	
	41" lgh., w/Console		1	2534 412			
	45" lgh., w/Console	8	1	---- ---	2461 928	2462 928	
	w/o Tilt Wheel		1	---- ---	---- ---	---- ---	2534 410
	w/Tilt Wheel		1	---- ---	---- ---	---- ---	2534 410
	CLIP		2	*6023 285	*6023 285	*6023 285	*6023 285
21-30-367	GROMMET, Gearshift Control Cable, w/Console		1	2405 571			
21-30-369	INSULATOR, Column Gearshift Cable Bracket Stud		1	2467 840	2467 840	2467 840	2467 840
	Column Gearshift Cable		1	2534 282	2534 282	2534 282	2530 590
	w/Tilt Wheel		1	---- ---	---- ---	2534 282	2534 282
21-30-370	BRACKET, Column Gearshift Cable		1	2660 246	2660 246	2660 246	2660 246
21-30-375	FLANGE or WHEEL, Control Cable Adjusting		1	1856 492	1856 492	1856 492	1856 492
	SCREW		1	6023 092	6023 092	6023 092	6023 092

TYPE LETTERS Indicate: V - Valiant, L - Dart, R - Belvedere, W - Coronet, P - Plymouth, D - Dodge, C - Chrysler, Y - Imperial

★Indicates use as required. Numerals in parentheses ( ) refer to notes. Printed in U.S.A.

⊟Indicates parts not listed in any previous parts book. Prices and specifications subject to change without notice.

March 1966 Supersedes May 1965. * Indicates change or addition.

MyMopar.com

AUTOMATIC TRANSMISSION

21-30-0 TRANSMISSION GEARSHIFT CONTROLS - Cont'd

CODE	PART NAME AND DESCRIPTION	CYL	PER CAR	VALIANT / DART	PLYMOUTH BELVEDERE / DODGE CORONET	PLYMOUTH FURY / DODGE POLARA / CHRYSLER	IMPERIAL
21-30-379	PLATE, Column Gearshift Cable Lock		2	2467 838	2467 838	2467 838	2467 838
21-30-380	SHIELD, Gearshift Control Cable, V2-L, V2-H, L2-L, L2-H		1	1739 230			
21-30-389	STRAP, Column Gearshift Cable Grommet . . .		1	---- ---	---- ---	---- ---	2643 657
21-30-390	SEAL, Gearshift Control Cable, 11/16" O. D.		1	*1316 813	*1316 813	*1316 813	*1316 813
21-30-392	ADAPTER, Control Cable		1	2464 678	2464 678	2464 678	2464 678
21-30-394	SPRING, Control Cable Adapter		1	1673 184	1673 184	1673 184	1673 184
	Gearshift Control Cable to Dash, w/Console. .	6	1	1556 693			
21-30-397	SNAP RING, Control Cable Adapter Pin		1	1322 503	1322 503	1322 503	1322 503
21-30-407	ACTUATOR or MECHANISM, Gearshift Control, w/Console		1	2534 512			
	w/Console	8	1	---- ---	2534 512	2534 512	
21-30-408	COVER, Gearshift Lever Opening, w/SEAL, w/Console		1	2499 284			
	w/Console	8	1	---- ---	2499 284	2499 284	
	SCREW, Gearshift Indicator Lever to Actuator, C		1	---- ---	---- ---	6024 827	
21-30-425	SCREW, Actuator Mounting, w/Console	8	4	---- ---	6024 004	6024 004	

21-84-0 TRANSMISSION SPEEDOMETER CABLE ASSEMBLY

21-84-1	CABLE, w/HOUSING		1	2426 163			
	w/Steel Case		1	---- ---	*2496 291	*2496 291	*2496 291
	w/Plastic Case		1	---- ---	---- ---	⊟2661 456	⊟2661 456
	w/Auto. Pilot, P2	8	1	---- ---	---- ---	2580 885	
	w/Auto. Pilot, D2, C1, C2, C3, Y1	8	1	---- ---	---- ---	2580 886	2580 886
	GROMMET, Dash		1	1370 460	2216 552	2216 552	2216 552
21-84-4	CABLE or SHAFT		1	2426 164			
			1	---- ---	2496 292		
			1	---- ---	---- ---	2076 271	
			1	---- ---	---- ---	---- ---	2209 229
	w/Auto. Pilot, D2, C1, C2, C3	8	1	---- ---	---- ---	2257 417	2257 417
21-84-7	CLAMP, Cable		1	2204 942	2204 942	2204 942	2204 942
21-84-28	SEAL, Cable Adapter		1	1942 259	1942 259	1942 259	1942 259

MyMopar.com

AUTOMATIC TRANSMISSION

21-85-0 TRANSMISSION SPEEDOMETER PINION

21-85-5 PINION V, L, R, W, P1 - A904

Tire Size	2.93 to 1 Ratio Pinion Teeth	3.23 to 1 Ratio Pinion Teeth	3.31 to 1 Ratio Pinion Teeth	3.55 to 1 Ratio Pinion Teeth	3.91 to 1 Ratio Pinion Teeth
6.50 x 13	2204 356 17 O	2204 358 19 DB	---- --- -- --	2204 359 20 G	2204 360 21 GR
7.00 x 13	2204 356 17 O	2204 357 18 DP	---- --- -- --	2204 359 20 G	2204 360 21 GR
6.95 x 14	*2204 355 16 B	*2204 357 18 DP	---- --- -- --	*2204 359 20 G	*2204 360 21 GR
7.35 x 14	2204 355 16 B	2204 357 18 DP	2204 357 18 DP	2204 359 20 G	2204 360 21 GR
7.75 x 14	2204 355 16 B	2204 356 17 O	2204 357 18 DP	2204 358 19 DB	2204 360 21 GR
8.25 x 14	2204 355 16 B	2204 356 17 O	2204 356 17 O	2204 358 19 DB	2204 360 21 GR
8.55 x 14	2204 355 16 B	2204 356 17 O	---- --- -- --	2204 357 18 DP	---- --- -- --
6.70 x 15	2204 355 16 B	2204 356 17 O	2204 356 17 O	2204 357 18 DP	2204 359 20 G
7.10 x 15	*2204 358 19 DB(1)	*2204 355 16 B	*2204 356 17 O	*2204 357 18 DP	*2204 359 20 G
7.60 x 15	*2204 357 18 DP(1)	*2204 355 16 B	---- --- -- --	*2204 356 17 O	---- --- -- --

COLOR OF PINIONS

B-BROWN	O-ORANGE	DP-DARK PURPLE	DB-DARK BLUE	G-GREEN	GR-GRAY

NOTE 1: Use 1.250 to 1 Ratio Adapter, Available at Stewart Warner Corporation.

R1, W1, P1 - Police and Taxi - A727

Tire Size	2.93 to 1 Ratio Pinion Teeth	3.23 to 1 Ratio Pinion Teeth	3.55 to 1 Ratio Pinion Teeth
7.35 x 14	2204 357 18 DP	2204 359 20 G	2204 357 18 DP(2)
7.75 x 14	2204 357 18 DP	2204 359 20 G	2204 357 18 DP(2)
8.25 x 14	2204 357 18 DP	2204 358 19 DB	2204 360 21 GR
8.55 x 14	2204 356 17 O	2204 358 19 DB	2204 360 21 GR
6.70 x 15	2204 356 17 O	2204 358 19 DB	---- --- -- --
7.10 x 15	2204 356 17 O	2204 358 19 DB	---- --- -- --
7.60 x 15	2204 356 17 O	2204 357 18 DP	---- --- -- --

COLOR OF PINIONS

B-BROWN	O-ORANGE	DP-DARK PURPLE	DB-DARK BLUE	G-GREEN	GR-GRAY

NOTE 2: Use .8000 to 1 Ratio Adapter, Available at Stewart Warner Corporation.

R2, W2, P2, D2, C, Y - 8 Cylinder Cars Only - A727

Tire Size	2.76 to 1 Ratio Pinion Teeth	2.93 to 1 Ratio Pinion Teeth	3.23 to 1 Ratio Pinion Teeth	3.55 to 1 Ratio Pinion Teeth	3.91 to 1 Ratio Pinion Teeth	4.56 to 1 Ratio Pinion Teeth
7.35 x 14	2204 356 17 O	2204 357 18 DP	2204 359 20 G	2204 357 18 DP(3)	2204 358 19 DB(3)	2204 360 21GR(3)
7.75 x 14	2204 356 17 O	2204 357 18 DP	2204 359 20 G	2204 357 18 DP(3)	---- --- -- --	---- --- -- --
8.25 x 14	2204 356 17 O	2204 357 18 DP	2204 358 19 DB	2204 360 21 GR	---- --- -- --	---- --- -- --
8.55 x 14	2204 355 16 B	2204 356 17 O	2204 358 19 DB	2204 360 21 GR	---- --- -- --	---- --- -- --
9.00 x 14	2204 355 16 B	2204 355 16 B	2204 357 18 DP	---- --- -- --	---- --- -- --	---- --- -- --
6.40 x 15	2204 356 17 O	---- --- -- --	---- --- -- --	---- --- -- --	---- --- -- --	---- --- -- --
6.70 x 15	2204 355 16 B	2204 356 17 O	2204 358 19 DB	2204 360 21 GR	---- --- -- --	---- --- -- --
7.10 x 15	---- --- -- --	2204 356 17 O	2204 358 19 DB	2204 360 21 GR	---- --- -- --	---- --- -- --
7.50 x 15	---- --- -- --	---- --- -- --	---- --- -- --	2204 358 19 DB	---- --- -- --	---- --- -- --
7.60 x 15	---- --- ----	2204 356 17 O	2204 357 18 DP	2204 359 20 G	---- --- -- --	---- --- -- --
9.15 x 15	---- --- -- --	2204 355 16 B	---- --- -- --	---- --- -- --	---- --- -- --	---- --- -- --

COLOR OF PINIONS

B-BROWN	O-ORANGE	DP-DARK PURPLE	DB-DARK BLUE	G-GREEN	GR-GRAY

NOTE 3: Use .8000 to 1 Ratio Adapter, Available at Stewart Warner Corporation.

MyMopar.com

AUTOMATIC TRANSMISSION

CODE	PART NAME AND DESCRIPTION	CYL	PER CAR	VALIANT / DART	PLYMOUTH BELVEDERE / DODGE CORONET	PLYMOUTH FURY / DODGE POLARA / CHRYSLER	IMPERIAL
21-85-0	**TRANSMISSION SPEEDOMETER PINION - Cont'd**						
21-85-22	SEAL, Drive Adapter		1	2426 332	2426 332	2426 332	2426 332
21-85-56	SEAL, Pinion		1	2124 328	2124 328	2124 328	2124 328
21-85-61	CLIP, Pinion		1	1942 174	1942 174	1942 174	1942 174
21-113-0	**TRANSMISSION NEUTRAL STARTER SWITCH**						
21-113-24	SWITCH PACKAGE, w/WASHER		1	2495 537	2495 537	2495 537	2495 537
21-113-29	WASHER, Mounting		1	2408 143	2408 143	2408 143	2408 143
21-119-0	**TRANSMISSION OIL PAN**						
21-119-11	PLUG, Oil Pan Drain, R, W, P, Police and Taxi		1	---- ---	2125 890	2125 890	
	R2, w/426 Maximum Performance		1	---- ---	2125 890		
21-119-15	TUBE, Oil Filler	6	1	2466 041	2466 041	2466 041	
	w/273 cu. in. Engine, w/A904LA Trans.	8	1	2466 042	2466 042		
	Police and Taxi, w/A727A Trans.	6	1	---- ---	*2204 788		
	w/273 and 318 cu. in. Engine, w/A727A Trans.	8	1	---- ---	2204 788		
	w/361 and 383 cu. in. Engine	8	1	---- ---	2204 716		
	w/426 cu. in. Engine, Hemispherical	8	1	---- ---	2466 393		
	P, Police, w/A727A Trans.	6	1	---- ---	---- ---	2466 298	
	P, D2-L, w/318 cu. in. Engine	8	1	---- ---	---- ---	*2466 298	
	P, D, w/361 and 383 cu. in. Engine	8	1	---- ---	---- ---	2204 929	
	C1, C2, C3, w/383 and 413 cu. in. Engine, Y1.	8	1	---- ---	---- ---	2204 929	2204 929
21-119-19	INDICATOR, Oil Level		1	2466 302	2466 302	2466 302	2466 302
21-119-25	SEAL, Oil Filler Tube		1	1316 815	1316 815	1316 815	1316 815
21-142-0	**TRANSMISSION CONTROL LEVER**						
21-142-12	LEVER, Throttle Control	6	1	2120 817	2264 701	2465 980	
		8	1	2465 619			
	Taxi	6	1	---- ---	2264 744	2264 744	
	w/318 cu. in. Engine	8	1	---- ---	2264 744		
	w/273 cu. in. Engine, w/A904LA Trans.	8	1	---- ---	2532 351		
	w/273 cu. in. Engine, w/A727A Trans., Taxi.	8	1	---- ---	2532 351		
	w/361, 383 and 426 cu. in. Engine, A727B Trans.	8	1	---- ---	*2264 744	---- ---	---- ---
		8	1	---- ---	---- ---	2463 759	2463 794
21-142-20	INSULATOR		1	1859 767			
21-142-21	BUSHING		1	1859 768			

TYPE LETTERS Indicate: V - Valiant, L - Dart, R - Belvedere, W - Coronet, P - Plymouth, D - Dodge, C - Chrysler, Y - Imperial

★Indicates use as required. Numerals in parentheses ( ) refer to notes. Printed in U.S.A.
⊟Indicates parts not listed in any previous parts book. Prices and specifications subject to change without notice.
* Indicates change or addition. March 1966 Supersedes May 1965.

MyMopar.com

AUTOMATIC TRANSMISSION

NOTE: All quantities are one (1) unless otherwise indicated in parenthesis.

	TRANSMISSION	2466 120 A904G	2466 119 A904G	2466 118 A904G	2466 123 A904LA	2466 122 A904LA	2466 134 A727A
21-01-0	**TRANSMISSION SETS OR PACKAGES**						
21-01-3	SEAL and GASKET PACKAGE . . .	2495 091	2495 091	2495 091	2495 091	2495 091	2525 482
21-03-0	**TRANSMISSION CASE**						
21-03-1	CASE	2464 990	2464 990	2464 990	2464 442	2464 442	2466 209
21-04-0	**TRANSMISSION CASE EXTENSION**						
21-04-1	EXTENSION	2464 690	2464 690	2466 290	2464 690	2466 290	2466 047
21-04-2	GASKET	2205 322	2205 322	2205 322	2205 322	2205 322	2400 064
	Output Shaft Bearing Inspection Cover	---- ---	---- ---	---- ---	---- ---	---- ---	2466 049
21-04-6	SCREW, Extension or Sprag, Long .	2464 593	2464 593	2464 593	2464 593	2464 593	2464 593
	Short (5)	6023 514	6023 514	6023 514	6023 514	6023 514	6023 514
21-04-8	COVER, Output Shaft Bearing Inspection	---- ---	---- ---	---- ---	---- ---	---- ---	2466 048
21-04-11	BUSHING	---- ---	---- ---	---- ---	---- ---	---- ---	2466 824
	BEARING	2464 545	2464 545	2464 545	2464 545	2464 545	---- ---
21-04-12	SNAP RING, Bearing	2464 855	2464 855	2464 855	2464 855	2464 855	---- ---
21-04-18	WASHER, Extension or Sprag Screw	2464 595	2464 595	2464 595	2464 595	2464 595	2464 595
21-05-0	**TRANSMISSION OUTPUT SHAFT**						
21-05-1	SHAFT, w/PLUG	2464 854	2464 854	2466 411	2464 854	2466 411	2466 045
21-05-2	BEARING, Output Shaft Front	---- ---	---- ---	---- ---	---- ---	---- ---	2466 224
21-05-8	SNAP RING, Bearing, Outer	---- ---	---- ---	---- ---	---- ---	---- ---	*2400 320
	Front Bearing, Front (2)	---- ---	---- ---	---- ---	---- ---	---- ---	*6025 570
21-05-12	OIL SEAL, Output Shaft	2464 482	2464 482	2464 482	2464 482	2464 482	---- ---
	1 1/4" lgh., 1 3/16" I.D., w/5 Sealing Lips, Rubber	---- ---	---- ---	---- ---	---- ---	---- ---	2400 301
	OIL SEAL or BOOT, Output Shaft and Yoke, 1 61/64" lgh., 2 1/2" O.D., Rubber and Metal	---- ---	---- ---	---- ---	---- ---	---- ---	2400 300
21-05-18	RING, Output Shaft and Yoke Seal Stop	---- ---	---- ---	---- ---	---- ---	---- ---	*2466 207
21-05-19	SNAP RING, Output Shaft, .040" (★)	6024 822	6024 822	6024 822	6024 822	6024 822	---- ---
	.048" Blue (★)	6024 823	6024 823	6024 823	6024 823	6024 823	---- ---
	.059" Green (★)	6022 859	6022 859	6022 859	6022 859	6022 859	---- ---
	.048" (★)	---- ---	---- ---	---- ---	---- ---	---- ---	6022 816
	.055" (★)	---- ---	---- ---	---- ---	---- ---	---- ---	6024 311
	.062" (★)	---- ---	---- ---	---- ---	---- ---	---- ---	6024 312
21-05-35	WASHER, Output Thrust, .052" Natural (★)	2466 090	2466 090	2466 090	2466 090	2466 090	---- ---
	.068" Red (★)	2466 169	2466 169	2466 169	2466 169	2466 169	---- ---
	.083" Black (★)	2466 170	2466 170	2466 170	2466 170	2466 170	---- ---
	WASHER, Output Thrust	---- ---	---- ---	---- ---	---- ---	---- ---	2400 843

TYPE LETTERS Indicate: V - Valiant, L - Dart, R - Belvedere, W - Coronet, P - Plymouth, D - Dodge, C - Chrysler, Y - Imperial

★Indicates use as required. Numerals in parentheses ( ) refer to notes. Printed in U.S.A.

⊟Indicates parts not listed in any previous parts book. Mopar specifications subject to change without notice.

March 1966 Supersedes May 1965. * Indicates change or addition

MyMopar.com

AUTOMATIC TRANSMISSION

NOTE: All quantities are one (1) unless otherwise indicated in parenthesis.

	TRANSMISSION	2466 120 A904G	2466 119 A904G	2466 118 A904G	2466 123 A904LA	2466 122 A904LA	2466 134 A727A
21-117-0	**TRANSMISSION OIL FILTER**						
	NOTE: See Code 9-46-27 for Tubes						
21-117-1	FILTER or STRAINER	2466 849	2466 849	2466 849	2466 849	2466 849	2466 849
	SCREW (3)	6023 524	6023 524	6023 524	6023 524	6023 524	6023 524
21-117-5	GASKET, Oil Filter	2205 202	2205 202	2205 202	2205 202	2205 202	2205 202
21-118-0	**TRANSMISSION OIL PUMP**						
21-118-6	ROTOR PACKAGE, Front Pump	2240 302	2240 302	2240 302	2240 302	2240 302	2275 497
	Rear Pump	2495 090	2495 090	2495 090	2495 090	2495 090	2275 496
21-118-34	PIN, Rear Pump Rotor Drive	2408 144	2408 144	2408 144	2408 144	2408 144	---- ---
21-118-40	HOUSING, Front Pump, w/BUSHING	2204 712	2204 712	2204 712	2204 712	2204 712	2466 977
	Rear Pump	1942 463	1942 463	1942 463	1942 463	1942 463	2464 383
21-118-42	OIL SEAL, Front Oil Pump Housing						
	2 1/4" O.D.	2124 705	2124 705	2124 705	2124 705	2124 705	---- ---
	2 5/8" O.D.	---- ---	---- ---	---- ---	---- ---	---- ---	1942 020
21-118-45	OIL SEAL, Front Pump Housing,						
	8 17/64" O.D.	2204 709	2204 709	2204 709	2204 709	2204 709	---- ---
	10" O.D.	---- ---	---- ---	---- ---	---- ---	---- ---	1942 021
21-118-47	BUSHING, Front Pump Housing	2466 796	2466 796	2466 796	2466 796	2466 796	2466 324
21-118-53	COVER, Rear Pump Housing	2400 087	2400 087	2400 087	2400 087	2400 087	2400 087
21-118-54	GASKET, Front Pump Housing	---- ---	---- ---	---- ---	---- ---	---- ---	2124 846
21-118-55	SCREW, Front Pump Housing, w/WASHER (★)	6023 943	6023 943	6023 943	6023 943	6023 943	6023 943
21-118-57	SHIELD, Front Pump Housing Vent.	---- ---	---- ---	---- ---	---- ---	---- ---	2204 993
21-119-0	**TRANSMISSION OIL PAN**						
21-119-3	PAN, Oil	2464 413	2464 413	2464 413	2464 413	2464 413	2464 419
	SCREW (14)	6023 355	6023 355	6023 355	6023 355	6023 355	6023 355
21-119-5	GASKET, Oil Pan	2205 299	2205 299	2205 299	2205 299	2205 299	2464 324
21-119-11	PLUG, Oil Pan Drain	---- ---	---- ---	---- ---	---- ---	---- ---	2125 890
21-119-12	GASKET, Drain Plug	---- ---	---- ---	---- ---	---- ---	---- ---	2400 863
21-129-0	**TRANSMISSION INPUT SHAFT AND TORQUE CONVERTER REACTION SHAFT**						
21-129-5	SHAFT, Input, w/Rear Clutch RETAINER	*2464 993	2464 993	2464 993	2464 896	2464 896	---- ---
	SHAFT, Input	2464 315	2464 315	2464 315	2464 315	2464 315	---- ---
	SHAFT, Input, w/BUSHING	---- ---	---- ---	---- ---	---- ---	---- ---	2124 831
21-129-6	BUSHING, Input Shaft	---- ---	---- ---	---- ---	---- ---	---- ---	2205 242

TYPE LETTERS Indicate: V - Valiant, L - Dart, R - Belvedere, W - Coronet, P - Plymouth, D - Dodge, C - Chrysler, Y - Imperial

★Indicates use as required. Numerals in parentheses ( ) refer to notes. Printed in U.S.A.

⊟Indicates parts not listed in any previous parts book. Prices and specifications subject to change without notice.

* Indicates change or addition.

March 1966 Supersedes May 1965.

MyMopar.com

AUTOMATIC TRANSMISSION

NOTE: All quantities are one (1) unless otherwise indicated in parenthesis.

	TRANSMISSION	2466 120 A904G	2466 119 A904G	2466 118 A904G	2466 123 A904LA	2466 122 A904LA	2466 134 A727A
21-129-0	**TRANSMISSION INPUT SHAFT AND TORQUE CONVERTER REACTION SHAFT - Cont'd**						
21-129-7	RING, Input Shaft Seal (★)	1941 831	1941 831	1941 831	1941 831	1941 831	1942 041
	SNAP RING, Input Shaft	6022 859	6022 859	6022 859	6022 859	6022 859	---- ---
21-129-10	SHAFT, Reaction, w/SUPPORT, 27T., 6 7/16" lgh.	*1942 419	*1942 419	*1942 419	*1942 419	*1942 419	---- ---
	27T., 6 3/8" lgh.	---- ---	---- ---	---- ---	---- ---	---- ---	*2124 810
21-129-11	BAFFLE, Vent	---- ---	---- ---	---- ---	---- ---	---- ---	2400 479
21-129-13	RING, Reaction Shaft Support Seal (2)	1942 389	1942 389	1942 389	1942 389	1942 389	2124 813
21-129-23	BUSHING, Reaction Shaft	2205 302	2205 302	2205 302	2205 302	2205 302	2205 240
21-129-24	GASKET, Reaction Shaft Support	1942 390	1942 390	1942 390	1942 390	1942 390	---- ---
21-133-0	**TRANSMISSION CLUTCH**						
21-133-5	CLUTCH, Front	---- ---	---- ---	---- ---	2464 903	---- ---	2124 814
21-133-7	RETAINER, Front Clutch Piston, w/BUSHING	2205 325	2205 325	2205 325	2464 897	2464 897	2124 815
	Rear Clutch	⊟2464 991	⊟2464 991	⊟2464 991	⊟2464 900	⊟2464 900	2124 836
	Rear Clutch Piston	---- ---	---- ---	---- ---	---- ---	---- ---	2124 833
21-133-10	BUSHING, Front Clutch Retainer	2205 303	2205 303	2205 303	2205 303	2205 303	2205 241
21-133-15	PISTON, Front Clutch	1942 395	1942 395	1942 395	1942 395	1942 395	2124 819
	Rear Clutch	2464 905	2464 905	2464 905	2464 905	2464 905	2204 645
21-133-17	SEAL, Front Clutch Piston, Inner	1942 396	1942 396	1942 396	1942 396	1942 396	2124 820
	Outer	1942 397	1942 397	1942 397	1942 397	1942 397	2124 821
	Rear Clutch Piston, Inner	2125 187	2125 187	2125 187	2125 187	2125 187	1942 054
	Outer	1942 397	1942 397	1942 397	1942 397	1942 397	2124 835
21-133-20	SPRING, Front Clutch Piston Return	2205 233	1942 467	1942 467	2124 573	2205 233	2124 822
	Rear Clutch Piston	1942 414	1942 414	1942 414	1942 414	1942 414	1942 015
21-133-22	RETAINER, Front Clutch Piston Spring	1942 399	1942 399	1942 399	1942 399	1942 399	2124 823
21-133-25	SNAP RING, Rear Clutch Piston Spring, 5 27/64" O.D.	1942 415	1942 415	1942 415	1942 415	1942 415	---- ---
	Rear Clutch Retainer, 5 1/4" O.D. (★)	*1942 423	*1942 423	*1942 423	*1942 423	*1942 423	---- ---
	.068" thk., 5 1/4" O.D. (★)	*1942 422	*1942 422	*1942 422	*1942 422	*1942 422	---- ---
	Rear Clutch Piston Retainer, 1 31/64" O.D.	---- ---	---- ---	---- ---	---- ---	---- ---	2124 872
	Rear Clutch Piston Spring, 7 3/16" O.D.	---- ---	---- ---	---- ---	---- ---	---- ---	1942 057
21-133-36	DISC, Front Clutch Driving (★)	2205 203	2205 203	2205 203	2205 203	2205 203	2124 827
	Rear Clutch Driving (★)	2466 689	2466 689	2466 689	2466 689	2466 689	2466 033

TYPE LETTERS Indicate: V - Valiant, L - Dart, R - Belvedere, W - Coronet, P - Plymouth, D - Dodge, C - Chrysler, Y - Imperial

★Indicates use as required. Numerals in parentheses ( ) refer to notes. Printed in U.S.A.

⊟Indicates parts not listed in any previous parts book. Prices and specifications subject to change without notice.

March 1966 Supersedes May 1965. * Indicates change or addition.

MyMopar.com

AUTOMATIC TRANSMISSION

NOTE: All quantities are one (1) unless otherwise indicated in parenthesis.

	TRANSMISSION	2466 120 A904G	2466 119 A904G	2466 118 A904G	2466 123 A904LA	2466 122 A904LA	2466 134 A727A
21-133-0	**TRANSMISSION CLUTCH - Cont'd**						
21-133-38	PLATE, Front Clutch (★)	1942 403	1942 403	1942 403	1942 403	1942 403	2124 826
	Rear Clutch (★)	1942 403	1942 403	1942 403	1942 403	1942 403	2124 826
21-133-39	PLATE, Front Clutch Pressure	1942 402	1942 402	1942 402	2464 892	2464 892	2124 825
	Rear Clutch Pressure, Front	2464 890	2464 890	2464 890	2464 890	2464 890	2124 837
	Rear Clutch Pressure, Rear	1942 402	1942 402	1942 402	2464 892	2464 892	2124 825
21-133-40	GEAR, Sun, w/BUSHING	1942 434	1942 434	1942 434	1942 434	1942 434	2466 536
21-133-42	SHELL, Sun Gear Driving	1942 438	1942 438	1942 438	1942 438	1942 438	2400 662
21-133-43	SNAP RING, Front Clutch, Outer, .060" thk., 5 1/4" O.D.	*1942 421	*1942 421	*1942 421	*1942 421	*1942 421	---- ---
	Front Clutch, Inner, 2 7/16" O.D.	1942 400	1942 400	1942 400	1942 400	1942 400	---- ---
	Rear Clutch Retainer, .060" thk., 5 1/4" O.D. (★)	1942 421	1942 421	1942 421	1942 421	1942 421	---- ---
	Rear Clutch Retainer, .068" thk., 5 1/4" O.D. (★)	1942 422	1942 422	1942 422	1942 422	1942 422	---- ---
	Rear Clutch Retainer, .076" thk., 5 1/4" O.D. (★)	1942 423	1942 423	1942 423	1942 423	1942 423	---- ---
	Front Clutch, Inner, 3 1/4" O.D.	---- ---	---- ---	---- ---	---- ---	---- ---	2124 824
	Front Clutch, .060" thk., 7" O.D.	---- ---	---- ---	---- ---	---- ---	---- ---	*1942 063
	Rear Clutch Retainer, .060" thk., 7" O.D. (★)	---- ---	---- ---	---- ---	---- ---	---- ---	1942 063
	Rear Clutch Retainer, .074" thk., 7" O.D. (★)	---- ---	---- ---	---- ---	---- ---	---- ---	1942 064
	Rear Clutch Retainer, .088" thk., 7" O.D., (★)	---- ---	---- ---	---- ---	---- ---	---- ---	1942 065
21-133-46	RING, Sun Gear Driving Shell Lock (2)	1942 439	1942 439	1942 439	1942 439	1942 439	1736 521
21-133-47	PLATE, Sun Gear Driving Shell Thrust	---- ---	---- ---	---- ---	---- ---	---- ---	1942 080
	(2)	2124 258	2124 258	2124 258	2124 258	2124 258	---- ---
21-133-48	WASHER, Sun Gear Driving Shell Thrust (2)	2400 528	2400 528	2400 528	2400 528	2400 528	---- ---
	w/3 Tabs	---- ---	---- ---	---- ---	---- ---	---- ---	1942 081
21-133-65	WASHER, Front Clutch Thrust, Front and Rear, .042" thk. (2)	*2204 369	*2204 369	*2204 369	*2204 369	*2204 369	---- ---
	Front Clutch Thrust, Front, Green, .061" thk. (★)	---- ---	---- ---	---- ---	---- ---	---- ---	2204 622
	Front Clutch Thrust, Front, Red., .084" thk. (★)	---- ---	---- ---	---- ---	---- ---	---- ---	2204 623
	Front Clutch Thrust, Front, Yellow, .102" thk. (★)	---- ---	---- ---	---- ---	---- ---	---- ---	2400 284
	Front Clutch Thrust Rear, Green, .061" thk. (★)	---- ---	---- ---	---- ---	---- ---	---- ---	2204 622

TYPE LETTERS Indicate: V - Valiant, L - Dart, R - Belvedere, W - Coronet, P - Plymouth, D - Dodge, C - Chrysler, Y - Imperial

★Indicates use as required. Numerals in parentheses ( ) refer to notes. Printed in U.S.A.

⊟Indicates parts not listed in any previous parts book. Prices and specifications subject to change without notice.

* Indicates change or addition. March 1966 Supersedes May 1965.

MyMopar.com

AUTOMATIC TRANSMISSION

NOTE: All quantities are one (1) unless otherwise indicated in parenthesis.

	TRANSMISSION	2466 120 A904G	2466 119 A904G	2466 118 A904G	2466 123 A904LA	2466 122 A904LA	2466 134 A727A
21-134-0	**TRANSMISSION FRONT AND REAR PLANET PINION CARRIER AND COMPONENTS**						
21-134-5	CARRIER, w/PINIONS and WASHERS, Front	---- ---	---- ---	---- ---	---- ---	---- ---	2466 537
	UP TO Trans. Ser. No. 1512686	2525 018	2525 018	2525 018	2525 018	2525 018	---- ---
	AFTER Trans. Ser. No. 1512686	2538 251	2538 251	2538 251	2538 251	2538 251	---- ---
	Rear	2525 019	2525 019	2525 019	2525 019	2525 019	2466 539
21-134-8	PINION, Front and Rear Planet (6)	⊟2464 257	⊟2464 257	⊟2464 257	⊟2464 257	⊟2464 257	⊟2400 667
21-134-9	SHAFT, Front and Rear Planet Pinion (6)	⊟2408 019	⊟2408 019	⊟2408 019	⊟2408 019	⊟2408 019	⊟2464 178
21-134-10	WASHER, Front and Rear Planet Pinion (12)	⊟2400 142	⊟2400 142	⊟2400 142	⊟2400 142	⊟2400 142	⊟2204 648
21-134-11	ROLLER, Front and Rear Planet Pinion (114)	⊟2464 259	⊟2464 259	⊟2464 259	⊟2464 259	⊟2464 259	---- ---
	(138)	---- ---	---- ---	---- ---	---- ---	---- ---	⊟2204 647
21-134-12	RING, Front and Rear Planet Pinion Roller Thrust (12)	⊟2400 141	⊟2400 141	⊟2400 141	⊟2400 141	⊟2400 141	*2204 649
21-134-30	WASHER, Front and Rear Planet Pinion Carrier Thrust, w/3 Tabs (2)	---- ---	---- ---	---- ---	---- ---	---- ---	1942 081
21-134-36	SUPPORT, Front Annulus Gear UP TO Trans. Ser. No. 1512686	2464 902	2464 902	2464 902	2464 902	2464 902	---- ---
	AFTER Trans. Ser. No. 1512686	2538 253	2538 253	2538 253	2538 253	2538 253	---- ---
	Rear Annulus Gear	1942 450	1942 450	1942 450	1942 450	1942 450	---- ---
21-134-38	GEAR, Front and Rear Annulus (2)	1942 443	1942 443	1942 443	1942 443	1942 443	---- ---
	Front Annulus	---- ---	---- ---	---- ---	---- ---	---- ---	2400 663
	Rear Annulus	---- ---	---- ---	---- ---	---- ---	---- ---	2400 665
21-134-40	SNAP RING, Front and Rear Annulus Gear (2)	1942 444	1942 444	1942 444	1942 444	1942 444	---- ---
	Front Annulus Gear Support	1942 448	1942 448	1942 448	1942 448	1942 448	---- ---
21-134-45	WASHER, Front Annulus Gear Support Thrust	1942 447	1942 447	1942 447	1942 447	1942 447	---- ---
21-136-0	**TRANSMISSION BANDS**						
21-136-5	BAND, Kickdown	2204 792	2204 792	2204 792	2204 792	2204 792	2124 342
21-136-15	STRUT, Kickdown Band	1630 896	1630 896	1630 896	1630 896	1630 896	2124 848
	ANCHOR, Kickdown Band	---- ---	---- ---	---- ---	---- ---	---- ---	1942 120
21-136-17	SCREW, Kickdown Band Adjusting	1942 477	1942 477	1942 477	1942 477	1942 477	2400 389
21-136-20	LEVER, Kickdown Band	2204 952	2125 067	2125 067	2124 579	2124 579	2204 952
21-136-23	SHAFT, Kickdown Band Lever	1942 132	1942 132	1942 132	1942 132	1942 132	1942 132
21-136-30	BAND, Reverse	1942 487	1942 487	1942 487	1942 487	1942 487	1942 133

TYPE LETTERS Indicate: V - Valiant, L - Dart, R - Belvedere, W - Coronet, P - Plymouth, D - Dodge, C - Chrysler, Y - Imperial

★Indicates use as required. Numerals in parentheses ( ) refer to notes. Printed in U.S.A.

⊟Indicates parts not listed in any previous parts book. Prices and specifications subject to change without notice.

March 1966 Supersedes May 1965. * Indicates change or addition.

MyMopar.com

AUTOMATIC TRANSMISSION

NOTE: All quantities are one (1) unless otherwise indicated in parenthesis.

TRANSMISSION	2466 120 A904G	2466 119 A904G	2466 118 A904G	2466 123 A904LA	2466 122 A904LA	2466 134 A727A
21-136-0 TRANSMISSION BANDS - Cont'd						
21-136-41 STRUT, Reverse Band	1942 497	1942 497	1942 497	1942 497	1942 497	2204 823
21-136-44 LINK, Reverse Band, w/ANCHOR	2464 439	2464 439	2464 439	2464 439	2464 439	2204 820
21-136-47 LEVER, Reverse Band, w/STEM	1942 491	1942 491	1942 491	1942 491	1942 491	1942 137
Reverse Band, Short	2464 851	2464 851	2464 851	2464 851	2464 851	2124 493
21-136-49 SHAFT, Reverse Band Lever	1942 493	1942 493	1942 493	1942 493	1942 493	2124 857
21-136-52 SCREW, Reverse Band Adjusting	1942 543	1942 543	1942 543	1942 543	1942 543	1942 141
21-136-55 SEAL, Reverse Band Lever Shaft	---- ---	---- ---	---- ---	---- ---	---- ---	1550 711
21-136-65 DRUM, Reverse	2466 008	2466 008	2466 008	2466 008	2466 008	2464 384
21-136-228 CAM and RETAINER PACKAGE, "O" Running Clutch	2421 281	2421 281	2421 281	2421 281	2421 281	---- ---
21-136-229 SCREW and WASHER, Cam (6)	*1823 543	*1823 543	1823 543	*1823 543	*1823 543	---- ---
21-136-231 CAM, "O" Running Clutch	---- ---	---- ---	---- ---	---- ---	---- ---	1942 095
21-136-232 RACE, "O" Running Clutch	---- ---	---- ---	---- ---	---- ---	---- ---	2124 844
UP TO Trans. Ser. No. 1434877	2464 864	2464 864	2464 864	2464 864	2464 864	---- ---
AFTER Trans. Ser. No. 1434877	2466 911	2466 911	2466 911	2466 911	2466 911	---- ---
21-136-233 RETAINER, "O" Running Clutch Spring	---- ---	---- ---	---- ---	---- ---	---- ---	1942 096
21-136-235 ROLLER, "O" Running Clutch Cam (12)	*2464 888	*2464 888	*2464 888	*2464 888	*2464 888	* 670 776
21-136-236 SPRING, "O" Running Clutch Cam Roller (12)	*2464 446	*2464 446	*2464 446	*2464 446	*2464 446	*1942 187
21-136-237 WASHER, "O" Running Clutch Race Thrust	2400 528	2400 528	2400 528	2400 528	2400 528	---- ---
21-137-0 TRANSMISSION SERVOS						
21-137-5 PISTON, Kickdown Servo	1942 478	1942 478	1942 478	1942 478	1942 478	2124 850
21-137-8 RING, Kickdown Servo Piston Seal, Small	1672 287	1672 287	1672 287	1672 287	1672 287	2124 851
Large	1636 470	1636 470	1636 470	1636 470	1636 470	1942 123
Kickdown Servo Guide Seal	1636 470	1636 470	1636 470	1636 470	1636 470	1942 123
21-137-11 ROD, Kickdown Servo Piston	1942 482	1942 482	1942 482	1942 482	1942 482	2124 853
21-137-13 GUIDE, Kickdown Servo	1942 485	1942 485	1942 485	1942 485	1942 485	2124 856
21-137-19 SNAP RING, Kickdown Servo Piston Rod Guide	1942 486	1942 486	1942 486	1942 486	1942 486	1942 130
21-137-22 SPRING, Kickdown Servo Piston	1942 481	1942 481	1942 481	1942 481	1942 481	---- ---
Inner	---- ---	---- ---	---- ---	---- ---	---- ---	2124 852
Outer	---- ---	---- ---	---- ---	---- ---	---- ---	2125 069

TYPE LETTERS Indicate: V - Valiant, L - Dart, R - Belvedere, W - Coronet, P - Plymouth, D - Dodge, C - Chrysler, Y - Imperial

★Indicates use as required. Numerals in parentheses ( ) refer to notes. Printed in U.S.A.

⊟Indicates parts not listed in any previous parts book. Prices and specifications subject to change without notice.

* Indicates change or addition. March 1966 Supersedes May 1965.

MyMopar.com

AUTOMATIC TRANSMISSION

NOTE: All quantities are one (1) unless otherwise indicated in parenthesis.

	TRANSMISSION	2466 120 A904G	2466 119 A904G	2466 118 A904G	2466 123 A904LA	2466 122 A904LA	2466 134 A727A
21-137-0	**TRANSMISSION SERVOS - Cont'd**						
21-137-35	PISTON, Reverse Servo	2464 461	2464 461	2464 461	2464 461	2464 461	2464 689
21-137-41	SPRING, Reverse Servo Piston Cushion	1823 941	1823 941	1823 941	1823 941	1823 941	1823 941
21-137-44	SNAP RING, Reverse Servo Piston Plug	1823 940	1823 940	1823 940	1823 940	1823 940	1823 940
21-137-47	PLUG, Reverse Servo Piston	1942 152	1942 152	1942 152	1942 152	1942 152	1942 152
21-137-50	RING, Reverse Servo Piston Seal, Rubber	2464 462	2464 462	2464 462	2464 462	2464 462	2464 481
21-137-53	SPRING, Reverse Servo Piston	1942 458	1942 458	1942 458	1942 458	1942 458	1942 149
21-137-56	RETAINER, Reverse Servo Piston Spring	2464 463	2464 463	2464 463	2464 463	2464 463	1942 150
21-137-59	SNAP RING, Reverse Servo Piston Spring Retainer	2464 464	2464 464	2464 464	2464 464	2464 464	1942 130
21-137-200	PISTON, Accumulator	1942 153	1942 153	1942 153	1942 153	1942 153	1942 153
21-137-202	RING, Accumulator Piston Seal, Small	1941 831	1941 831	1941 831	1941 831	1941 831	1941 831
	Large	2124 255	2124 255	2124 255	2124 255	2124 255	2124 255
21-137-205	SPRING, Accumulator Piston	2125 109	2125 109	2125 109	2125 109	2125 109	2464 076
21-138-0	**TRANSMISSION GOVERNOR**						
21-138-2	REPAIR PACKAGE, Governor	2196 998	2196 998	2196 998	2196 998	2196 998	2275 498
21-138-7	SNAP RING, Governor Body	6022 583	6022 583	6022 583	6022 583	6022 583	6022 817
21-138-10	SUPPORT, Governor	2466 373	2466 373	2466 373	2466 373	2466 373	2466 371
21-138-13	WEIGHT, Governor, Outer	1636 461	1636 461	1636 461	1636 461	1636 461	1636 461
	Inner	1636 462	1636 462	1636 462	1636 462	1636 462	1636 462
21-138-15	SPRING, Governor Weight	2124 662	1949 858	1949 858	2124 662	1949 858	1949 858
21-138-19	SNAP RING, Governor Weight, Outer	1636 465	1636 465	1636 465	1636 465	1636 465	1636 465
	Inner	1636 464	1636 464	1636 464	1636 464	1636 464	1636 464
21-138-21	LOCK, Body Bolt (2)	2125 024	2125 024	2125 024	2125 024	2125 024	2125 024
21-138-23	VALVE, Governor	2124 663	2124 663	2124 663	2124 663	2124 663	2124 663
21-138-26	SHAFT, Governor Valve	1556 082	1556 082	1556 082	1556 082	1556 082	1556 082
21-138-29	SNAP RING, Governor Valve Shaft (2)	1638 461	1638 461	1638 461	1638 461	1638 461	1638 461
21-138-38	RING, Governor Support Seal (2)	1942 109	1942 109	1942 109	1942 109	1942 109	1942 109

TYPE LETTERS Indicate: V - Valiant, L - Dart, R - Belvedere, W - Coronet, P - Plymouth, D - Dodge, C - Chrysler, Y - Imperial

★Indicates use as required. Numerals in parentheses ( ) refer to notes. Printed in U.S.A.

⊟Indicates parts not listed in any previous parts book. Prices and specifications subject to change without notice.

March 1966 Supersedes May 1965. * Indicates change or addition.

MyMopar.com

AUTOMATIC TRANSMISSION

NOTE: All quantities are one (1) unless otherwise indicated in parenthesis.

	TRANSMISSION	2466 120 A904G	2466 119 A904G	2466 118 A904G	2466 123 A904LA	2466 122 A904LA	2466 134 A727A
21-139-0	**TRANSMISSION VALVE BODY AND VALVES**						
21-139-4	BODY, w/Transfer PLATE, Complete	2466 513	2466 514	2466 514	2466 515	2466 515	2464 693
21-139-9	VALVE, Manual	2464 675	2464 675	2464 675	2464 675	2464 675	2464 675
21-139-12	LEVER, Manual Valve	2464 676	2464 676	2464 676	2464 676	2464 676	2464 676
21-139-24	SPRING, Manual Valve Lever Detent	1942 225	1942 225	1942 225	1942 225	1942 225	1942 225
21-139-30	VALVE, Throttle	1636 423	1636 423	1636 423	1636 423	1636 423	1636 423
21-139-33	SPRING, Throttle Valve	1949 847	1949 847	1949 847	1949 847	1949 847	1949 847
21-139-47	SEAL, Throttle Lever Shaft	2466 548	2466 548	2466 548	2466 548	2466 548	2466 548
21-139-49	SNAP RING, Throttle Valve Lever Shaft	1539 430	1539 430	1539 430	1539 430	1539 430	1539 430
21-139-50	LEVER, Throttle Valve	2464 390	2464 390	2464 390	2464 390	2464 390	2464 390
21-139-63	PLUG, Regulator Valve Throttle Pressure	1942 245	1942 245	1942 245	1942 245	1942 245	1942 245
	Regulator Valve Line Pressure . .	1942 218	1942 218	1942 218	1942 218	1942 218	1942 218
21-139-64	SLEEVE, Regulator Valve Line Pressure Plug	1942 213	1942 213	1942 213	1942 213	1942 213	1942 213
21-139-67	VALVE, Regulator	2124 733	2124 733	2124 733	2124 733	2124 733	2124 733
21-139-68	SPRING, Regulator Valve	2124 734	2124 734	2124 734	2124 734	2124 734	2124 734
21-139-71	RETAINER, Regulator Valve Spring	2204 975	2204 975	2204 975	2204 975	2204 975	2204 975
21-139-74	SCREW, Line Pressure Adjusting .	2124 736	2124 736	2124 736	2124 736	2124 736	2124 736
	Throttle Pressure Adjusting . . .	6023 343	6023 343	6023 343	6023 343	6023 343	6023 343
21-139-76	NUT, Throttle Pressure Adjusting Screw Lock	1949 523	1949 523	1949 523	1949 523	1949 523	1949 523
	Line Pressure Adjusting Screw . .	2124 737	2124 737	2124 737	2124 737	2124 737	2124 737
21-139-78	VALVE, Kickdown	1941 623	1941 623	1941 623	1941 623	1941 623	1941 623
	PLUG, Kickdown Detent	1941 624	1941 624	1941 624	1941 624	1941 624	1941 624
21-139-95	VALVE, Shuttle	1854 275	1854 275	1854 275	1854 275	1854 275	1854 275
	PLUG, Shuttle Valve	1854 274	1854 274	1854 274	1854 274	1854 274	1854 274
21-139-98	SNAP RING, Shuttle Valve	1539 430	1539 430	1539 430	1539 430	1539 430	1539 430
21-139-101	SPRING, Shuttle Valve	2124 697	2124 697	2124 697	2124 697	2124 697	2124 697
21-139-105	VALVE, 1-2 Shift	1941 602	1942 602	1941 602	1941 602	1941 602	1941 602
	PLUG, 1-2 Shift Valve	1941 603	1941 603	1941 603	1941 603	1941 603	1941 603
	VALVE, 2-3 Shift	1941 600	1941 600	1941 600	1941 600	1941 600	1941 600
	PLUG, 2-3 Shift Valve	1941 601	1941 601	1941 601	1941 601	1941 601	1941 601

TYPE LETTERS Indicate: V - Valiant, L - Dart, R - Belvedere, W - Coronet, P - Plymouth, D - Dodge, C - Chrysler, Y - Imperial

★Indicates use as required. Numerals in parentheses ( ) refer to notes. Printed in U.S.A.

⊟Indicates parts not listed in any previous parts book. Prices and specifications subject to change without notice.

* Indicates change or addition. March 1966 Supersedes May 1965.

MyMopar.com

AUTOMATIC TRANSMISSION

NOTE: All quantities are one (1) unless otherwise indicated in parenthesis.

TRANSMISSION	2466 120 A904G	2466 119 A904G	2466 118 A904G	2466 123 A904LA	2466 122 A904LA	2466 134 A727A
21-139-0 TRANSMISSION VALVE BODY AND VALVES - Cont'd						
21-139-108 SPRING, 1-2 Shift Valve	2204 547	2204 547	2204 547	2204 547	2204 547	2204 547
2-3 Shift Valve	1942 231	1942 231	1942 231	1942 231	1942 231	1942 231
21-139-117 VALVE, Torque Converter Control	2124 256	2124 256	2124 256	2124 256	2124 256	2124 256
21-139-118 SPRING, Torque Converter Control Valve	2124 257	2124 257	2124 257	2124 257	2124 257	2124 257
21-139-135 COVER, Regulator Valve	2205 034	2205 034	2205 034	2205 034	2205 034	2205 034
Shift Valve	1942 228	1942 228	1942 228	1942 228	1942 228	1942 228
Shift Valve Plug	1942 230	1942 230	1942 230	1942 230	1942 230	1942 230
Shuttle Valve	1942 227	1942 227	1942 227	1942 227	1942 227	1942 227
Reverse Blocker Valve	2205 034	2205 034	2205 034	2205 034	2205 034	2205 034
21-139-140 PLATE, Valve Body	2205 053	2464 887	2464 887	2464 887	2464 887	2204 576
21-139-143 VALVE, Front and Rear Pump Check (2)	2204 599	2204 599	2204 599	2204 599	2204 599	2204 599
21-139-144 SPRING, Front and Rear Pump Check Valve (2)	1942 233	1942 233	1942 233	1942 233	1942 233	1942 233
21-139-147 PLATE, Transfer	2400 339	2400 339	2400 339	2400 340	2400 340	2400 340
21-139-154 SUPPORT, Transfer Plate	1942 237	1942 237	1942 237	1942 237	1942 237	1942 237
21-139-190 VALVE, Reverse Blocker	2464 778	2464 778	2464 778	2464 778	2464 778	2464 778
21-139-191 SEAL, Reverse Blocker Valve	2204 885	2204 885	2204 885	2205 885	2204 885	2204 885
21-139-193 SPRING, Reverse Blocker	2204 890	2204 890	2204 890	2204 890	2204 890	2204 890

NOTE: All quantities are one (1) unless otherwise indicated in parenthesis.

TRANSMISSION	2466 135 A727A	2466 111 A727A	2466 112 A727B	2466 113 A727B	2466 164 A727B	2466 125 A727B
21-01-0 TRANSMISSION SETS OR PACKAGES						
21-01-3 SEAL and GASKET PACKAGE	2525 482	2525 482	2525 482	2525 482	2525 483	2495 037
21-03-0 TRANSMISSION CASE						
21-03-1 CASE	2466 226	2466 209	2400 131	2400 131	2400 131	2400 131
21-04-0 TRANSMISSION CASE EXTENSION						
21-04-1 EXTENSION	2466 047	2466 047	2466 047	2466 047	2466 551	2400 065
21-04-2 GASKET	2400 064	2400 064	2400 064	2400 064	2400 064	2400 064
Output Shaft Bearing Inspection Cover	2466 049	2466 049	2466 049	2466 049	2466 049	---- ---
21-04-6 SCREW, Extension or Sprag, Long	2464 593	2464 593	2464 593	2464 593	2464 593	2464 593
Short (5)	6023 514	6023 514	6023 514	6023 514	6023 514	6023 514

TYPE LETTERS Indicate: V - Valiant, L - Dart, R - Belvedere, W - Coronet, P - Plymouth, D - Dodge, C - Chrysler, Y - Imperial

★Indicates use as required. Numerals in parentheses ( ) refer to notes. Printed in U.S.A.

⊟Indicates parts not listed in any previous parts book. Prices and specifications subject to change without notice.

March 1966 Supersedes May 1965. * Indicates change or addition.

MyMopar.com

AUTOMATIC TRANSMISSION

NOTE: All quantities are one (1) unless otherwise indicated in parenthesis.

	TRANSMISSION	2466 135 A727A	2466 111 A727A	2466 112 A727B	2466 113 A727B	⊟2466 164 A727B	2466 125 A727B
21-04-0	**TRANSMISSION CASE EXTENSION - Cont'd**						
21-04-8	COVER, Output Shaft Bearing Inspection	2466 048	2466 048	2466 048	2466 048	2466 048	---- ---
21-04-11	BUSHING	2466 824	2466 824	2466 824	2466 824	2466 824	---- ---
	BEARING	---- ---	---- ---	---- ---	---- ---	---- ---	1672 194
21-04-12	SNAP RING, Bearing	---- ---	---- ---	---- ---	---- ---	---- ---	1736 432
21-04-18	WASHER, Extension or Sprag Screw	2464 595	2464 595	2464 595	2464 595	2464 595	2464 595
21-05-0	**TRANSMISSION OUTPUT SHAFT**						
21-05-1	SHAFT, w/PLUG	2466 045	2466 045	2466 045	2466 045	2466 045	2400 990
21-05-2	BEARING, Output Shaft Front	2466 224	2466 224	2466 224	2466 224	2466 224	---- ---
21-05-8	SNAP RING, Bearing Outer (2)	2400 320	2400 320	2400 320	2400 320	2400 320	---- ---
	Front Bearing, Front	6025 570	6025 570	6025 570	6025 570	6025 570	---- ---
21-05-12	OIL SEAL, Output Shaft	---- ---	---- ---	---- ---	---- ---	---- ---	2205 080
	1 1/4" lgh., 1 3/16" I.D., w/5 Sealing Lips, Rubber	2400 301	2400 301	2400 301	2400 301	2400 301	---- ---
	OIL SEAL or BOOT, Output Shaft and Yoke, 1 61/64" lgh., 2 1/2" O.D., Rubber and Metal	2400 300	2400 300	2400 300	2400 300	2400 300	---- ---
21-05-18	RING, Output Shaft and Yoke Seal Stop	2466 207	2466 207	2466 207	2466 207	2466 207	---- ---
21-05-19	SNAP RING, Output Shaft, .048" (★)	6022 816	6022 816	6022 816	6022 816	6022 816	6022 816
	.055" (★)	6024 311	6024 311	6024 311	6024 311	6024 311	6024 311
	.062"	6024 312	6024 312	6024 312	6024 312	6024 312	6024 312
21-05-35	WASHER, Output Thrust	2400 843	2400 843	2400 843	2400 843	2125 104	2400 843
21-117-0	**TRANSMISSION OIL FILTER**						
	Note: See Code 9-46-27 for Tubes						
21-117-1	FILTER or STRAINER	2466 849	2466 849	2466 849	2466 849	2466 849	2466 849
	SCREW (3)	6023 524	6023 524	6023 524	6023 524	6023 524	6023 524
21-117-5	GASKET, Oil Filter	2205 202	2205 202	2205 202	2205 202	2205 202	2205 202
21-118-0	**TRANSMISSION OIL PUMP**						
21-118-6	ROTOR PACKAGE, Front Pump	2275 497	2275 497	2275 497	2275 497	2585 224	2275 497
	Rear Pump	2275 496	2275 496	2275 496	2275 496	---- ---	2275 496
21-118-40	HOUSING, Front Pump, w/BUSHING	2466 977	2466 977	2466 977	2466 977	⊟2466 998	2466 977
	Rear Pump	2464 383	2464 383	2464 383	2464 383	2464 383	2464 383
21-118-42	OIL SEAL, Front Oil Pump Housing, 2 5/8" O.D.	1942 020	1942 020	1942 020	1942 020	1942 020	1942 020
21-118-45	OIL SEAL, Front Pump Housing, 10" O.D.	1942 021	1942 021	1942 021	1942 021	1942 021	1942 021
21-118-47	BUSHING, Front Pump Housing	2466 324	2466 324	2466 324	2466 324	2466 324	2466 324

TYPE LETTERS Indicate: V - Valiant, L - Dart, R - Belvedere, W - Coronet, P - Plymouth, D - Dodge, C - Chrysler, Y - Imperial

★Indicates use as required. Numerals in parentheses ( ) refer to notes. Printed in U.S.A.
⊟Indicates parts not listed in any previous parts book. Prices and specifications subject to change without notice.
* Indicates change or addition. March 1966 Supersedes May 1965.

MyMopar.com

AUTOMATIC TRANSMISSION

NOTE: All quantities are one (1) unless otherwise indicated in parenthesis.

	TRANSMISSION	2466 135 A727A	2466 111 A727A	2466 112 A727B	2466 113 A727B	2466 164 A727B	2466 125 A727B
21-118-0	**TRANSMISSION OIL PUMP - Cont'd**						
21-118-53	COVER, Rear Pump Housing	2400 087	2400 087	2400 087	2400 087	2400 087	2400 087
21-118-54	GASKET, Front Pump Housing	2124 846	2124 846	2124 846	2124 846	2124 846	2124 846
21-118-55	SCREW, Front Pump Housing, w/WASHER (★)	6023 943	6023 943	6023 943	6023 943	6023 943	6023 943
21-118-57	SHIELD, Front Pump Housing Vent	2204 993	2204 993	2204 993	2204 993	2204 993	2204 993
21-119-0	**TRANSMISSION OIL PAN**						
21-119-3	PAN, Oil	2464 419	2464 419	2464 419	2464 419	2464 419	2464 419
	SCREW (14)	6023 355	6023 355	6023 355	6023 355	6023 355	6023 355
21-119-5	GASKET, Oil Pan	2464 324	2464 324	2464 324	2464 324	2464 324	2464 324
21-119-11	PLUG, Oil Pan Drain	2125 890	---- ---	---- ---	---- ---	---- ---	---- ---
21-119-12	GASKET, Drain Plug	2400 863	---- ---	---- ---	---- ---	---- ---	---- ---
21-129-0	**TRANSMISSION INPUT SHAFT AND TORQUE CONVERTER REACTION SHAFT**						
21-129-5	SHAFT, Input, w/BUSHING	2124 831	2124 831	2124 831	2124 831	2466 403	2124 831
21-129-6	BUSHING, Input Shaft	2205 242	2205 242	2205 242	2205 242	2205 242	2205 242
21-129-7	RING, Input Shaft Seal	1942 041	1942 041	1942 041	1942 041	1942 041	1942 041
21-129-10	SHAFT, Reaction, w/SUPPORT, 27T., 6 3/8" lgh.	*2124 810	*2124 810	*2124 810	*2124 810	*2124 810	*2124 810
21-129-11	BAFFLE, Vent	2400 479	2400 479	2400 479	2400 479	2466 197	2400 479
21-129-13	RING, Reaction Shaft Support Seal (2)	2124 813	2124 813	2124 813	2124 813	2124 813	2124 813
21-129-23	BUSHING, Reaction Shaft	2205 240	2205 240	2205 240	2205 240	2205 240	2205 240
21-133-0	**TRANSMISSION CLUTCH**						
21-133-5	CLUTCH, Front	2124 814	2124 814	2124 814	2124 814	---- ---	*2124 814
21-133-7	RETAINER, Front Clutch Piston, w/BUSHING	2124 815	2124 815	2124 815	2124 815	2466 187	2124 815
	Rear Clutch	2124 836	2204 976	2124 836	2124 836	2538 047	2124 836
	Rear Clutch Piston	2124 833	2124 833	2124 833	2124 833	2124 833	2124 833
21-133-10	BUSHING, Front Clutch Retainer	2205 241	2205 241	2205 241	2205 241	2205 241	2205 241
21-133-15	PISTON, Front Clutch	2124 819	2124 819	2124 819	2124 819	2124 819	2124 819
	Rear Clutch	2204 645	2204 645	2204 645	2204 645	*2538 645	2204 645
21-133-17	SEAL, Front Clutch Piston, Inner	2124 820	2124 820	2124 820	2124 820	2124 820	2124 820
	Outer	2124 821	2124 821	2124 821	2124 821	2124 821	2124 821
	Rear Clutch Piston, Inner	1942 054	1942 054	1942 054	1942 054	1942 054	1942 054
	Outer	2124 835	2124 835	2124 835	2124 835	2124 835	2124 835

TYPE LETTERS Indicate: V - Valiant, L - Dart, R - Belvedere, W - Coronet, P - Plymouth, D - Dodge, C - Chrysler, Y - Imperial

★Indicates use as required. Numerals in parentheses ( ) refer to notes. Printed in U.S.A.

⊟Indicates parts not listed in any previous parts book. Prices and specifications subject to change without notice.

March 1966 Supersedes May 1965. * Indicates change or addition.

MyMopar.com

AUTOMATIC TRANSMISSION

NOTE: All quantities are one (1) unless otherwise indicated in parenthesis.

	TRANSMISSION	2466 135 A727A	2466 111 A727A	2466 112 A727B	2466 113 A727B	⊟2466 164 A727B	2466 125 A727B
21-133-0	**TRANSMISSION CLUTCH - Cont'd**						
21-133-20	SPRING, Front Clutch Piston Return	2124 822	2124 822	2124 822	2124 822	2124 822	2124 822
	Rear Clutch Piston	1942 015	1942 015	1942 015	1942 015	1942 015	1942 015
21-133-22	RETAINER, Front Clutch Piston Spring	2124 823	2124 823	2124 823	2124 823	2124 823	2124 823
21-133-25	SNAP RING, Rear Clutch Piston Retainer, 1 31/64" O.D.	2124 872	2124 872	2124 872	2124 872	2124 872	2124 872
	Rear Clutch Piston Spring, 7 3/16" O.D.	1942 057	1942 057	1942 057	1942 057	---- ---	1942 057
21-133-31	SPRING, Rear Clutch Wave	---- ---	---- ---	---- ---	---- ---	2466 806	---- ---
21-133-36	DISC, Front Clutch Driving (4) . . .	*2124 827	*2124 827	*2124 827	*2124 827	---- ---	*2124 827
	Rear Clutch Driving (3)	*2466 033	*2466 033	*2466 033	*2466 033	*2400 725	*2466 033
	(4)	---- ---	---- ---	---- ---	---- ---	*2466 033	---- ---
21-133-38	PLATE, Front Clutch (4)	*2124 826	*2124 826	*2124 826	*2124 826	---- ---	*2124 826
	(5)	---- ---	---- ---	---- ---	---- ---	*2124 826	---- ---
	Rear Clutch (3)	*2124 826	*2124 826	*2124 826	*2124 826	*2124 826	*2124 826
21-133-39	PLATE, Front Clutch Pressure . .	2124 825	2124 825	2124 825	2124 825	2124 825	2124 825
	Rear Clutch Pressure, Front . . .	2124 837	2124 837	2124 837	2124 837	2466 803	2124 837
	Rear Clutch Pressure, Rear . . .	2124 825	2124 825	2124 825	2124 825	2124 825	2124 825
21-133-40	GEAR, Sun, w/BUSHING	2466 536	2466 536	2466 536	2466 536	2466 536	2466 536
21-133-42	SHELL, Sun Gear Driving	2400 662	2400 662	2400 662	2400 662	2400 662	2400 662
21-133-43	SNAP RING, Front Clutch, Inner 3 1/4" O.D.	2124 824	2124 824	2124 824	2124 824	---- ---	2124 824
	Front Clutch, 7" O.D.	1942 063	1942 063	1942 063	1942 063	---- ---	1942 063
	.060" thk., 7" O.D. (★)	---- ---	---- ---	---- ---	---- ---	1942 063	---- ---
	Front Clutch, .074" thk., 7" O.D. (★)	---- ---	---- ---	---- ---	---- ---	1942 064	---- ---
	Front Clutch, .088" thk., 7" O.D. (★)	---- ---	---- ---	---- ---	---- ---	1942 065	---- ---
	Front Clutch, Inner, 3 5/16" O.D.	---- ---	---- ---	---- ---	---- ---	2466 369	---- ---
	Rear Clutch Retainer, .060" thk., 7" O.D. (★)	1942 063	1942 063	1942 063	1942 063	1942 063	1942 063
	Rear Clutch Retainer, .074" thk., 7" O.D. (★)	1942 064	1942 064	1942 064	1942 064	1942 064	1942 064
	Rear Clutch Retainer, .088" thk., 7" O.D. (★)	1942 065	1942 065	1942 065	1942 065	1942 065	1942 065
	Rear Clutch Retainer, .106" thk., 7" O.D. (★)	---- ---	---- ---	---- ---	---- ---	2466 811	---- ---
21-133-46	RING, Sun Gear Driving Shell Lock (2)	1736 521	1736 521	1736 521	1736 521	2466 384	1736 521
21-133-47	PLATE, Sun Gear Driving Shell Thrust	1942 080	1942 080	1942 080	1942 080	1942 080	1942 080
21-133-48	WASHER, Sun Gear Driving Shell Thrust, w/3 Tabs	1942 081	1942 081	1942 081	1942 081	1942 081	1942 081
21-133-62	SPACER, Rear Clutch Piston Spring	---- ---	---- ---	---- ---	---- ---	2466 804	---- ---

TYPE LETTERS Indicate: V - Valiant, L - Dart, R - Belvedere, W - Coronet, P - Plymouth, D - Dodge, C - Chrysler, Y - Imperial

★Indicates use as required. Numerals in parentheses ( ) refer to notes. Printed in U.S.A.

⊟Indicates parts not listed in any previous parts book. Prices and specifications subject to change without notice.

* Indicates change or addition. March 1966 Supersedes May 1965.

MyMopar.com

AUTOMATIC TRANSMISSION

NOTE: All quantities are one (1) unless otherwise indicated in parenthesis.

	TRANSMISSION	2466 135 A727A	2466 111 A727A	2466 112 A727B	2466 113 A727B	2466 164 A727B	2466 125 A727B
21-133-0	**TRANSMISSION CLUTCH - Cont'd**						
21-133-65	WASHER, Front Clutch Thrust, Front, Green, .061" thk. (★)	2204 622	2204 622	2204 622	2204 622	2204 622	2204 622
	Front Clutch Thrust, Front, Red, .084" thk. (★)	2204 623	2204 623	2204 623	2204 623	2204 623	2204 623
	Front Clutch Thrust, Front, Yellow, .102" thk. (★)	2400 284	2400 284	2400 284	2400 284	2400 284	2400 284
	Front Clutch Thrust, Rear, Green, .061" thk. (★)	2204 622	2204 622	2204 622	2204 622	2204 622	2204 622
21-134-0	**TRANSMISSION FRONT AND REAR PLANET PINION CARRIER AND COMPONENTS**						
21-134-5	CARRIER, w/PINIONS and WASHERS, Front	2466 537	2466 537	2466 537	2466 537	2466 537	2466 537
	Rear	2466 539	2466 539	2466 539	2466 539	2466 539	2466 539
21-134-8	PINION, Front and Rear Planet (6)	⊟2400 667	⊟2400 667	⊟2400 667	⊟2400 667	⊟2400 667	⊟2400 667
21-134-9	SHAFT, Front and Rear Planet Pinion (6)	⊟2464 178	⊟2464 178	⊟2464 178	⊟2464 178	⊟2464 178	⊟2464 178
21-134-10	WASHER, Front and Rear Planet Pinion (12)	⊟2204 648	⊟2204 648	⊟2204 648	⊟2204 648	⊟2204 648	⊟2204 648
21-134-11	ROLLER, Front and Rear Planet Pinion (138)	⊟2204 647	⊟2204 647	⊟2204 647	⊟2204 647	⊟2204 647	⊟2204 647
21-134-12	RING, Front and Rear Planet Pinion Roller Thrust (12)	⊟2204 649	⊟2204 649	⊟2204 649	⊟2204 649	⊟2204 649	⊟2204 649
21-134-30	WASHER, Front and Rear Planet Pinion Carrier Thrust, w/3 Tabs (2)	1942 081	1942 081	1942 081	1942 081	1942 081	1942 081
21-134-38	GEAR, Front Annulus	2400 663	2400 663	2400 663	2400 663	2400 663	2400 663
	Rear Annulus	2400 665	2400 665	2400 665	2400 665	2400 665	2400 665
21-134-45	PLATE, Rear Annulus Gear Thrust	---- ---	---- ---	2400 580	---- ---	---- ---	---- ---
21-136-0	**TRANSMISSION BANDS**						
21-136-5	BAND, Kickdown	2124 342	2124 342	2124 342	2124 342	⊟2538 461	2124 342
21-136-15	STRUT, Kickdown Band	2124 848	2124 848	2124 848	2124 848	2124 848	2124 848
	ANCHOR, Kickdown Band	1942 120	1942 120	1942 120	1942 120	1942 120	1942 120
21-136-17	SCREW, Kickdown Band Adjusting	2400 389	2400 389	2400 389	2400 389	2400 389	2400 389
21-136-20	LEVER, Kickdown Band	2204 952	2204 952	2125 067	2125 067	2124 579	2125 067
21-136-23	SHAFT, Kickdown Band Lever	1942 132	1942 132	1942 132	1942 132	1942 132	1942 132
21-136-30	BAND, Reverse	1942 133	1942 133	1942 133	1942 133	1942 133	1942 133
21-136-41	STRUT, Reverse Band	2204 823	2204 823	2204 823	2204 823	2204 823	2204 823

TYPE LETTERS Indicate: V - Valiant, L - Dart, R - Belvedere, W - Coronet, P - Plymouth, D - Dodge, C - Chrysler, Y - Imperial

★Indicates use as required. Numerals in parentheses ( ) refer to notes. Printed in U.S.A.

⊟Indicates parts not listed in any previous parts book. Prices and specifications subject to change without notice.

March 1966 Supersedes May 1965. * Indicates change or addition.

MyMopar.com

AUTOMATIC TRANSMISSION

NOTE: All quantities are one (1) unless otherwise indicated in parenthesis.

TRANSMISSION	2466 135 A727A	2466 111 A727A	2466 112 A727B	2466 113 A727B	2466 164 A727B	2466 125 A727B
21-136-0 TRANSMISSION BANDS - Cont'd						
21-136-44 LINK, Reverse Band, w/ANCHOR .	2204 820	2204 820	2204 820	2204 820	2204 820	2204 820
21-136-47 LEVER, Reverse Band, w/STEM . .	1942 137	1942 137	1942 137	1942 137	1942 137	1942 137
Reverse Band, Short	2124 493	2124 493	2124 493	2124 493	2124 493	2124 493
21-136-49 SHAFT, Reverse Band Lever	2124 857	2124 857	2124 857	2124 857	2124 857	2124 857
21-136-52 SCREW, Reverse Band Adjusting . .	1942 141	1942 141	1942 141	1942 141	1942 141	1942 141
21-136-55 SEAL, Reverse Band Lever Shaft .	1550 711	1550 711	1550 711	1550 711	1550 711	1550 711
21-136-65 DRUM, Reverse	2464 384	2464 384	2464 384	2464 384	2464 384	2464 384
21-136-231 CAM, "O" Running Clutch	1942 095	1942 095	1942 095	1942 095	1942 095	1942 095
21-136-232 RACE, "O" Running Clutch	2124 844	2124 844	2124 844	2124 844	2124 844	2124 844
21-136-233 RETAINER, "O" Running Clutch Spring	1942 096	1942 096	1942 096	1942 096	1942 096	1942 096
21-136-235 ROLLER, "O" Running Clutch Cam (12)	* 670 776	* 670 776	* 670 776	* 670 776	* 670 776	* 670 776
21-136-236 SPRING, "O" Running Clutch Cam Roller (12)	*1942 187	*1942 187	*1942 187	*1942 187	*1942 187	*1942 187
21-137-0 TRANSMISSION SERVOS						
21-137-5 PISTON, Kickdown Servo	2124 850	2124 850	2124 850	2124 850	2124 850	2124 850
21-137-8 RING, Kickdown Servo Piston Seal, Small	2124 851	2124 851	2124 851	2124 851	2124 851	2124 851
Large	1942 123	1942 123	1942 123	1942 123	1942 123	1942 123
Kickdown Servo Guide Seal	1942 123	1942 123	1942 123	1942 123	1942 123	1942 123
21-137-11 ROD, Kickdown Servo Piston	2124 853	2124 853	2124 853	2124 853	2124 853	2124 853
21-137-13 GUIDE, Kickdown Servo	2124 856	2124 856	2124 856	2124 856	2124 856	2124 856
21-137-19 SNAP RING, Kickdown Servo Piston Rod Guide	1942 130	1942 130	1942 130	1942 130	1942 130	1942 130
21-137-22 SPRING, Kickdown Servo Piston Inner	2124 852	2124 852	2124 852	2124 852	2124 852	2124 852
Outer	2125 069	2125 069	2125 069	2125 069	2125 069	2125 069
21-137-35 PISTON, Reverse Servo	2464 689	2464 689	2464 689	2464 689	2464 689	2464 689
21-137-41 SPRING, Reverse Servo Piston Cushion	1823 941	1823 941	1823 941	1823 941	1823 941	1823 941
21-137-44 SNAP RING, Reverse Servo Piston Plug	1823 940	1823 940	1823 940	1823 940	1823 940	1823 940
21-137-47 PLUG, Reverse Servo Piston	1942 152	1942 152	1942 152	1942 152	1942 152	1942 152
21-137-50 RING, Reverse Servo Piston Seal, Rubber	2464 481	2464 481	2464 481	2464 481	2464 481	2464 481

TYPE LETTERS Indicate: V - Valiant, L - Dart, R - Belvedere, W - Coronet, P - Plymouth, D - Dodge, C - Chrysler, Y - Imperial

★Indicates use as required. Numerals in parentheses ( ) refer to notes. Printed in U.S.A.

⊟Indicates parts not listed in any previous parts book. Prices and specifications subject to change without notice.

* Indicates change or addition. March 1966 Supersedes May 1965.

MyMopar.com

AUTOMATIC TRANSMISSION

NOTE: All quantities are one (1) unless otherwise indicated in parenthesis.

TRANSMISSION	2466 135 A727A	2466 111 A727A	2466 112 A727B	2466 113 A727B	2466 164 A727B	2466 125 A727B
21-137-0 TRANSMISSION SERVOS - Cont'd						
21-137-53 SPRING, Reverse Servo Piston . . .	1942 149	1942 149	1942 149	1942 149	1942 149	1942 149
21-137-56 RETAINER, Reverse Servo Piston Spring	1942 150	1942 150	1942 150	1942 150	1942 150	1942 150
21-137-59 SNAP RING, Reverse Servo Piston Spring Retainer	1942 130	1942 130	1942 130	1942 130	1942 130	1942 130
21-137-200 PISTON, Accumulator	1942 153	1942 153	1942 153	1942 153	1942 153	1942 153
21-137-202 RING, Accumulator Piston Seal, Small	1941 831	1941 831	1941 831	1941 831	1941 831	1941 831
Large	2124 255	2124 255	2124 255	2124 255	2124 255	2124 255
21-137-205 SPRING, Accumulator Piston	2464 076	2125 109	2125 109	2125 109	---- --	2125 109
21-138-0 TRANSMISSION GOVERNOR						
21-138-2 REPAIR PACKAGE, Governor	2275 498	2275 498	2275 498	2298 514	---- ---	2275 498
21-138-7 SNAP RING, Governor Body	6022 817	6022 817	6022 817	6022 817	---- ---	6022 817
21-138-10 SUPPORT, Governor	2466 371	2466 371	2466 371	2466 371	---- ---	2466 371
21-138-13 WEIGHT, Governor, Outer	1636 461	1636 461	1636 461	1636 461	---- ---	1636 461
Inner	1636 462	1636 462	1636 462	1636 462	---- ---	1636 462
21-138-15 SPRING, Governor Weight	1949 858	1949 858	1949 858	1949 859	---- ---	---- ---
UP TO Trans. Ser. No. 1586839 .	---- ---	---- ---	---- ---	---- ---	---- ---	1949 858
AFTER Trans. Ser. No. 1586839 .	---- ---	---- ---	---- ---	---- ---	---- ---	2124 662
21-138-19 SNAP RING, Governor Weight, Outer	1636 465	1636 465	1636 465	1636 465	---- ---	1636 465
Inner	1636 464	1636 464	1636 464	1636 464	---- ---	1636 464
21-138-21 LOCK, Body Bolt (2)	2125 024	2125 024	2125 024	2125 024	---- ---	2125 024
21-138-23 VALVE, Governor	2124 663	2124 663	2124 663	2124 663	---- ---	2124 663
21-138-26 SHAFT, Governor Valve	1556 082	1556 082	1556 082	1556 082	---- ---	1556 082
21-138-29 SNAP RING, Governor Valve Shaft (2)	1638 461	1638 461	1638 461	1638 461	---- ---	1638 461
21-138-38 RING, Governor Support Seal (2) . .	1942 109	1942 109	1942 109	1942 109	---- ---	1942 109
21-139-0 TRANSMISSION VALVE BODY AND VALVES						
21-139-4 BODY, w/Transfer PLATE, Complete	2464 693	2464 693	2464 693	2464 693	2538 050	2464 693
21-139-9 VALVE, Manual	2464 675	2464 675	2464 675	2464 675	2464 675	2464 675
21-139-12 LEVER, Manual Valve	2464 676	2464 676	2464 676	2464 676	2464 676	2464 676
21-139-13 ROD, 1-2 Shift Valve Plug	---- ---	---- ---	---- ---	---- ---	2466 305	---- ---
21-139-24 SPRING, Manual Valve Lever Detent	1942 225	1942 225	1942 225	1942 225	1942 225	1942 225
21-139-30 VALVE, Throttle	1636 423	1636 423	1636 423	1636 423	1636 423	1636 423

TYPE LETTERS Indicate: V - Valiant, L - Dart, R - Belvedere, W - Coronet, P - Plymouth, D - Dodge, C - Chrysler, Y - Imperial

★Indicates use as required. Numerals in parentheses ( ) refer to notes. Printed in U.S.A.

⊟Indicates parts not listed in any previous parts book. Prices and specifications subject to change without notice.

MyMopar.com

AUTOMATIC TRANSMISSION

NOTE: All quantities are one (1) unless otherwise indicated in parenthesis.

	TRANSMISSION	2466 135 A727A	2466 111 A727A	2466 112 A727B	2466 113 A727B	2466 164 A727B	2466 125 A727B
21-139-0	**TRANSMISSION VALVE BODY AND VALVES - Cont'd**						
21-139-33	SPRING, Throttle Valve	1949 847	1949 847	1949 847	1949 847	1949 847	1949 847
21-139-40	PLATE, Valve Body	---- ---	---- ---	---- ---	---- ---	2538 049	---- ---
21-139-47	SEAL, Throttle Lever Shaft	2466 548	2466 548	2466 548	2466 548	2466 548	2466 548
21-139-49	SNAP RING, Throttle Valve Lever Shaft	1539 430	1539 430	1539 430	1539 430	1539 430	1539 430
21-139-50	LEVER, Throttle Valve	2464 390	2464 390	2464 390	2464 390	2464 390	2464 390
21-139-63	PLUG, Regulator Valve Throttle Pressure	1942 245	1942 245	1942 245	1942 245	1942 245	1942 245
	Regulator Valve Line Pressure	1942 218	1942 218	1942 218	1942 218	1942 218	1942 218
21-139-64	SLEEVE, Regulator Valve Line Pressure Plug	1942 213	1942 213	1942 213	1942 213	1942 213	1942 213
21-139-67	VALVE, Regulator	2124 733	2124 733	2124 733	2124 733	2124 733	2124 733
21-139-68	SPRING, Regulator Valve	2124 734	2124 734	2124 734	2124 734	2124 734	2124 734
21-139-71	RETAINER, Regulator Valve Spring	2204 975	2204 975	2204 975	2204 975	2204 975	2204 975
21-139-74	SCREW, Line Pressure Adjusting	2124 736	2124 736	2124 736	2124 736	2124 736	2124 736
	Throttle Pressure Adjusting	6023 343	6023 343	6023 343	6023 343	6023 343	6023 343
21-139-76	NUT, Throttle Pressure Adjusting Screw Lock	1949 523	1949 523	1949 523	1949 523	1949 523	1949 523
	Line Pressure Adjusting Screw	2124 737	2124 737	2124 737	2124 737	2124 737	2124 737
21-139-78	VALVE, Kickdown	1941 623	1941 623	1941 623	1941 623	1941 623	1941 623
	PLUG, Kickdown Detent	1941 624	1941 624	1941 624	1941 624	1941 624	1941 624
21-139-95	VALVE, Shuttle	1854 275	1854 275	1854 275	1854 275	---- ---	1854 275
	PLUG, Shuttle Valve	1854 274	1854 274	1854 274	1854 274	---- ---	1854 274
21-139-98	SNAP RING, Shuttle Valve	1539 430	1539 430	1539 430	1539 430	---- ---	1539 430
21-139-101	SPRING, Shuttle Valve	2124 697	2124 697	2124 697	2124 697	---- ---	2124 697
21-139-105	VALVE, 1-2 Shift	1941 602	1941 602	1941 602	1941 602	---- ---	1941 602
	PLUG, 1-2 Shift Valve	1941 603	1941 603	1941 603	1941 603	1941 603	1941 603
	VALVE, 2-3 Shift	1941 600	1941 600	1941 600	1941 600	---- ---	1941 600
	PLUG, 2-3 Shift Valve	1941 601	1941 601	1941 601	1941 601	---- ---	1941 601
21-139-108	SPRING, 1-2 Shift Valve	2204 547	2204 547	2204 547	2204 547	---- ---	2204 547
	2-3 Shift Valve	1942 231	1942 231	1942 231	1942 231	---- ---	1942 231
21-139-117	VALVE, Torque Converter Control	2124 256	2124 256	2124 256	2124 256	2124 256	2124 256
21-139-118	SPRING, Torque Converter Control Valve	2124 257	2124 257	2124 257	2124 257	2124 257	2124 257
21-139-135	COVER, Regulator Valve	2205 034	2205 034	2205 034	2205 034	2205 034	2205 034
	Shift Valve	1942 228	1942 228	1942 228	1942 228	1942 228	1942 228
	Shift Valve Plug	1942 230	1942 230	1942 230	1942 230	1942 230	1942 230
	Shuttle Valve	1942 227	1942 227	1942 227	1942 227	1942 227	1942 227
	Reverse Blocker Valve	2205 034	2205 034	2205 034	2205 034	---- ---	2205 034

TYPE LETTERS Indicate: V - Valiant, L - Dart, R - Belvedere, W - Coronet, P - Plymouth, D - Dodge, C - Chrysler, Y - Imperial

★Indicates use as required. Numerals in parentheses ( ) refer to notes. Printed in U.S.A.

⊟Indicates parts not listed in any previous parts book. Prices and specifications subject to change without notice.

* Indicates change or addition.

March 1966 Supersedes May 1965.

MyMopar.com

AUTOMATIC TRANSMISSION

NOTE: All quantities are one (1) unless otherwise indicated in parenthesis.

TRANSMISSION	2466 135 A727A	2466 111 A727A	2466 112 A727B	2466 113 A727B	2466 164 A727B	2466 125 A727B
21-139-0 TRANSMISSION VALVE BODY AND VALVES - Cont'd						
21-139-140 PLATE, Valve Body	2204 576	2204 576	2204 576	2204 576	2538 049	2204 576
21-139-143 VALVE, Front and Rear Pump Check (2)	2204 599	2204 599	2204 599	2204 599	---- ---	2204 599
21-139-144 SPRING, Front and Rear Pump Check Valve (2)	1942 233	1942 233	1942 233	1942 233	---- ---	1942 233
21-139-147 PLATE, Transfer	2400 340	2400 340	2400 340	2400 340	2466 307	2400 340
21-139-154 SUPPORT, Transfer Plate	1942 237	1942 237	1942 237	1942 237	1942 237	1942 237
21-139-190 VALVE, Reverse Blocker	2464 778	2464 778	2464 778	2464 778	---- ---	2464 778
21-139-191 SEAL, Reverse Blocker Valve . . .	2204 885	2204 885	2204 885	2204 885	---- ---	2204 885
21-139-193 SPRING, Reverse Blocker	2204 890	2204 890	2204 890	2204 890	---- ---	2204 890

NOTE: All quantities are one (1) unless otherwise indicated in parenthesis.

TRANSMISSION	2466 144 A904LA	2466 149 A727B	2466 147 A727B	2466 148 A727B	2466 151 A727A	2466 152 A727A	2466 166 A727A
21-01-0 TRANSMISSION SETS OR PACKAGES							
21-01-3 SEAL and GASKET PACKAGE	2495 091	2495 037	2525 482	2525 482	2525 482	2525 482	2525 482
21-03-0 TRANSMISSION CASE							
21-03-1 CASE	2464 442	2400 131	2400 131	2400 131	2466 226	2466 209	2466 209
21-04-0 TRANSMISSION CASE EXTENSION							
21-04-1 EXTENSION	2464 690	2400 065	2466 047	2466 047	2466 047	2466 047	2466 047
21-04-2 GASKET	2205 322	2400 064	2400 064	2400 064	2400 064	2400 064	2400 064
Output Shaft Bearing Inspection Cover . . .	---- ---	---- ---	2466 049	2466 049	2466 049	2466 049	2466 049
21-04-6 SCREW, Extension or Sprag, Long	2464 593	2464 593	2464 593	2464 593	2464 593	2464 593	2464 593
Short (5)	6023 514	6023 514	6023 514	6023 514	6023 514	6023 514	6023 514
21-04-8 COVER, Output Shaft Bearing Inspection . . .	---- ---	---- ---	2466 048	2466 048	2466 048	2466 048	2466 048
21-04-11 BUSHING	---- ---	---- ---	2466 824	2466 824	2466 824	2466 824	2466 824
BEARING	2464 545	1672 194	---- ---	---- ---	---- ---	---- ---	---- ---
21-04-12 SNAP RING, Bearing . .	2464 855	1736 432	---- ---	---- ---	---- ---	---- ---	---- ---
21-04-18 WASHER, Extension or Sprag Screw	2464 595	2464 595	2464 595	2464 595	2464 595	2464 595	2464 595

TYPE LETTERS Indicate: V - Valiant, L - Dart, R - Belvedere, W - Coronet, P - Plymouth, D - Dodge, C - Chrysler, Y - Imperial

★Indicates use as required. Numerals in parentheses ( ) refer to notes. Printed in U.S.A.

⊟Indicates parts not listed in any previous parts book. Prices and specifications subject to change without notice.

March 1966 Supersedes May 1965. * Indicates change or addition.

MyMopar.com

AUTOMATIC TRANSMISSION

NOTE: All quantities are one (1) unless otherwise indicated in parenthesis.

	TRANSMISSION	2466 144 A904LA	2466 149 A727B	2466 147 A727B	2466 148 A727B	2466 151 A727A	2466 152 A727A	2466 166 A727A
21-05-0	**TRANSMISSION OUTPUT SHAFT**							
21-05-1	SHAFT, w/PLUG	2464 854	2400 990	2466 045	2466 045	2466 045	2466 045	2466 045
21-05-2	BEARING, Output Shaft Front	---- ---	---- ---	2466 224	2466 224	2466 224	2466 224	2466 224
21-05-8	SNAP RING, Bearing Outer (2)	---- ---	---- ---	2400 320	2400 320	2400 320	2400 320	2400 320
	Front Bearing, Front . .	---- ---	---- ---	6025 570	6025 570	6025 570	6025 570	6025 570
21-05-12	OIL SEAL, Output Shaft	2464 482	2205 080	---- ---	---- ---	---- ---	---- ---	---- ---
	1 1/4" lgh., 1 3/16" I. D., w/5 Sealing Lips, Rubber	---- ---	---- ---	2400 301	2400 301	2400 301	2400 301	2400 301
	OIL SEAL or BOOT, Output Shaft and Yoke, 1 61/64" lgh., 2 1/2" O. D., Rubber and Metal	---- ---	---- ---	2400 300	2400 300	2400 300	2400 300	2400 300
21-05-18	RING, Output Shaft and Yoke Seal Stop	---- ---	---- ---	2466 207	2466 207	2466 207	2466 207	2466 207
21-05-19	SNAP RING, Output Shaft .040" (★)	6024 822	---- ---	---- ---	---- ---	---- ---	---- ---	---- ---
	.048" Blue (★)	6024 823	6022 816	6022 816	6022 816	6022 816	6022 816	6022 816
	.055" (★)	---- ---	6024 311	6024 311	6024 311	6024 311	6024 311	6024 311
	.059" Green (★)	6022 859	---- ---	---- ---	---- ---	---- ---	---- ---	---- ---
	.062" (★)	---- ---	6024 312	6024 312	6024 312	6024 312	6024 312	6024 312
21-05-35	WASHER, Output Thrust, .052" Natural (★)	2466 090	---- ---	---- ---	---- ---	---- ---	---- ---	---- ---
	.068" Red (★)	2466 169	---- ---	---- ---	---- ---	---- ---	---- ---	---- ---
	.083" Black (★)	2466 170	---- ---	---- ---	---- ---	---- ---	---- ---	---- ---
	WASHER, Output Thrust .	---- ---	2400 843	2400 843	2400 843	2400 843	2400 843	2400 843
21-117-0	**TRANSMISSION OIL FILTER**							
	NOTE: See Code 9-46-27 for Tubes.							
21-117-1	FILTER or STRAINER . .	2466 849	2466 849	2466 849	2466 849	2466 849	2466 849	2466 849
	SCREW (3)	6023 524	6023 524	6023 524	6023 524	6023 524	6023 524	6023 524
21-117-5	GASKET, Oil Filter . . .	*2205 202	2205 202	2205 202	2205 202	2205 202	2205 202	2205 202
21-118-0	**TRANSMISSION OIL PUMP**							
21-118-6	ROTOR PACKAGE, Front Pump	2240 302	2275 497	2275 497	2275 497	2275 497	2275 497	2275 497
	Rear Pump	2495 090	2275 496	2275 496	2275 496	2275 496	2275 496	2275 496
21-118-34	PIN, Rear Pump Rotor Drive	2408 144	---- ---	---- ---	---- ---	---- ---	---- ---	---- ---
21-118-40	HOUSING, Front Pump w/BUSHING	2204 712	2466 977	2466 977	2466 977	2466 977	2466 977	2466 977
	Rear Pump	1942 463	2464 383	2464 383	2464 383	2464 383	2464 383	2464 383
21-118-42	OIL SEAL, Front Oil Pump Housing	*2124 705	*1942 020	*1942 020	*1942 020	*1942 020	*1942 020	*1942 020

TYPE LETTERS indicate: V - Valiant, L - Dart, R - Belvedere, W - Coronet, P - Plymouth, D - Dodge, C - Chrysler, Y - Imperial

★Indicates use as required. Numerals in parentheses ( ) refer to notes. Printed in U.S.A.
⊟Indicates parts not listed in any previous parts book. Prices and specifications subject to change without notice.
• Indicates change or addition. March 1966 Supersedes May 1965.

MyMopar.com

AUTOMATIC TRANSMISSION

NOTE: All quantities are one (1) unless otherwise indicated in parenthesis.

	TRANSMISSION	2466 144 A904LA	2466 149 A727B	2466 147 A727B	2466 148 A727B	2466 151 A727A	2466 152 A727A	2466 166 A727A
21-118-0	**TRANSMISSION OIL PUMP - Cont'd**							
21-118-45	OIL SEAL, Front Pump Housing, 8 17/64" O. D.	2204 709	---- ---	---- ---	---- ---	---- ---	---- ---	---- ---
	10" O. D.	---- ---	1942 021	1942 021	1942 021	1942 021	1942 021	1942 021
21-118-47	BUSHING, Front Pump Housing	2466 796	2466 324	2466 324	2466 324	2466 324	2466 324	2466 324
21-118-53	COVER, Rear Pump Housing	2400 087	2400 087	2400 087	2400 087	2400 087	2400 087	2400 087
21-118-54	GASKET, Front Pump Housing	---- ---	2124 846	2124 846	2124 846	2124 846	2124 846	2124 846
21-118-55	SCREW, w/WASHER, Front Pump Housing (★) . . .	*6023 943	6023 943	6023 943	6023 943	6023 943	6023 943	6023 943
21-118-57	SHIELD, Front Pump Housing Vent	---- ---	2204 993	2204 993	2204 993	2204 993	2204 993	2204 993
21-119-0	**TRANSMISSION OIL PAN**							
21-119-3	PAN, Oil	2464 413	2464 419	2464 419	2464 419	2464 419	2464 419	2464 419
	SCREW (14)	6023 355	6023 355	6023 355	6023 355	6023 355	6023 355	6023 355
21-119-5	GASKET, Oil Pan	2205 299	2464 324	2464 324	2464 324	2464 324	2464 324	2464 324
21-119-11	PLUG, Oil Pan Drain . .	---- ---	---- ---	---- ---	---- ---	---- ---	2125 890	---- ---
21-119-12	GASKET, Drain Plug . .	---- ---	---- ---	---- ---	---- ---	---- ---	2400 863	---- ---
21-129-0	**TRANSMISSION INPUT SHAFT AND TORQUE CONVERTER REACTION SHAFT**							
21-129-5	SHAFT, Input, w/Rear Clutch RETAINER . .	2464 896	---- ---	---- ---	---- ---	---- ---	---- ---	---- ---
	SHAFT, Input	2464 315	---- ---	---- ---	---- ---	---- ---	---- ---	---- ---
	SHAFT, Input, w/BUSHING	---- ---	2124 831	2124 831	2124 831	2124 831	2124 831	2124 831
21-129-6	BUSHING, Input Shaft . .	---- ---	2205 242	2205 242	2205 242	2205 242	2205 242	2205 242
21-129-7	RING, Input Shaft Seal (★)	1941 831	1942 041	1942 041	1942 041	1942 041	1942 041	1942 041
	SNAP RING, Input Shaft	6022 859	---- ---	---- ---	---- ---	---- ---	---- ---	---- ---
21-129-10	SHAFT, Reaction, w/SUPPORT, 27T., 6 3/8" lgh.	---- ---	*2124 810	*2124 810	*2124 810	*2124 810	*2124 810	*2124 810
	27T., 6 7/16" lgh. . . .	*1924 419	---- ---	---- ---	---- ---	---- ---	---- ---	---- ---
21-129-11	BAFFLE, Vent	---- ---	2400 479	2400 479	2400 479	2400 479	2400 479	2400 479
21-129-13	RING, Reaction Shaft Support Seal (2)	1942 389	2124 813	2124 813	2124 813	2124 813	2124 813	2124 813
21-129-23	BUSHING, Reaction Shaft	2205 302	2205 240	2205 240	2205 240	2205 240	2205 240	2205 240
21-129-24	GASKET, Reaction Shaft Support	1942 390	---- ---	---- ---	---- ---	---- ---	---- ---	---- ---

TYPE LETTERS Indicate: V - Valiant, L - Dart, R - Belvedere, W - Coronet, P - Plymouth, D - Dodge, C - Chrysler, Y - Imperial

★Indicates use as required. Numerals in parentheses ( ) refer to notes. Printed in U.S.A.

⊟Indicates parts not listed in any previous parts book. Prices and specifications subject to change without notice.

March 1966 Supersedes May 1965. * Indicates change or addition.

MyMopar.com

AUTOMATIC TRANSMISSION

NOTE: All quantities are one (1) unless otherwise indicated in parenthesis.

	TRANSMISSION	2466 144 A904LA	2466 149 A727B	2466 147 A727B	2466 148 A727B	2466 151 A727A	2466 152 A727A	2466 166 A727A
21-133-0	**TRANSMISSION CLUTCH**							
21-133-5	CLUTCH, Front	---- ---	*2124 814	2124 814	2124 814	2124 814	2124 814	2124 814
21-133-7	RETAINER, Front Clutch, w/BUSHING	2464 897	2124 815	2124 815	2124 815	2124 815	2124 815	2124 815
	Rear Clutch	⊟2464 900	2466 801	2466 801	2466 801	2466 801	2466 801	2466 801
	Rear Clutch Piston	---- ---	2124 833	2124 833	2124 833	2124 833	2124 833	2124 833
21-133-10	BUSHING, Front Clutch Retainer	2205 303	2205 241	2205 241	2205 241	2205 241	2205 241	2205 241
21-133-15	PISTON, Front Clutch	1942 395	2124 819	2124 819	2124 819	2124 819	2124 819	2124 819
	Rear Clutch	2464 905	2204 645	2204 645	2204 645	2204 645	2204 645	2204 645
21-133-17	SEAL, Front Clutch Piston, Inner	1942 396	2124 820	2124 820	2124 820	2124 820	2124 820	2124 820
	Outer	1942 397	2124 821	2124 821	2124 821	2124 821	2124 821	2124 821
	Rear Clutch Piston, Inner	2125 187	1942 054	1942 054	1942 054	1942 054	1942 054	1942 054
	Outer	1942 397	2124 835	2124 835	2124 835	2124 835	2124 835	2124 835
21-133-20	SPRING, Front Clutch Piston	2205 233	2124 822	2124 822	2124 822	2124 822	2124 822	2124 822
	Rear Clutch Piston	1942 414	1942 015	1942 015	1942 015	1942 015	1942 015	1942 015
21-133-22	RETAINER, Front Clutch Piston Spring	1942 399	2124 823	2124 823	2124 823	2124 823	2124 823	2124 823
21-133-25	SNAP RING, Rear Clutch Piston Spring, 5 27/64" O. D.	1942 415	---- ---	---- ---	---- ---	---- ---	---- ---	---- ---
	Rear Clutch Retainer, .068" thk., 5 1/4" O.D. (★)	*1942 422	---- ---	---- ---	---- ---	---- ---	---- ---	---- ---
	.076" thk., 5 1/4" O. D. (★)	1942 423	---- ---	---- ---	---- ---	---- ---	---- ---	---- ---
	Front, Clutch, Inner, 2 7/16" O. D.	1942 400	---- ---	---- ---	---- ---	---- ---	---- ---	---- ---
	Rear Clutch Piston Retainer, 1 31/64" O. D.	---- ---	2124 872	2124 872	2124 872	2124 872	2124 872	2124 872
21-133-31	SPRING, Rear Clutch Wave	---- ---	2466 806	2466 806	2466 806	2466 806	2466 806	2466 806
21-133-36	DISC, Front Clutch (★)	2205 203	2124 827	2124 827	2124 827	2124 827	2124 827	2124 827
	Rear Clutch (4)	2466 689	2466 800	2466 800	2466 800	2466 800	2466 800	2466 800
21-133-38	PLATE, Front Clutch (4)	1942 403	2124 826	2124 826	2124 826	2124 826	2124 826	2124 826
	Rear Clutch (3)	1942 403	2124 826	2124 826	2124 826	2124 826	2124 826	2124 826
21-133-39	PLATE, Front Clutch Pressure	2464 892	2124 825	2124 825	2124 825	2124 825	2124 825	2124 825
	Rear Clutch Pressure, Rear	2464 892	2124 825	2124 825	2124 825	2124 825	2124 825	2124 825
	Rear Clutch Pressure, Front	*2464 890	2466 803	2466 803	2466 803	2466 803	2466 803	2466 803

TYPE LETTERS Indicate: V - Valiant, L - Dart, R - Belvedere, W - Coronet, P - Plymouth, D - Dodge, C - Chrysler, Y - Imperial

★Indicates use as required. Numerals in parentheses ( ) refer to notes. Printed in U.S.A.

⊟Indicates parts not listed in any previous parts book. Prices and specifications subject to change without notice.

* Indicates change or addition.

March 1966 Supersedes May 1965.

MyMopar.com

AUTOMATIC TRANSMISSION

NOTE: All quantities are one (1) unless otherwise indicated in parenthesis.

	TRANSMISSION	2466 144 A904LA	2466 149 A727B	2466 147 A727B	2466 148 A727B	2466 151 A727A	2466 152 A727A	2466 166 A727A
21-133-0	**TRANSMISSION CLUTCH - Cont'd**							
21-133-40	GEAR, Sun, w/BUSHING .	1942 434	2466 536	2466 536	2466 536	2466 536	2466 536	2466 536
21-133-42	SHELL, Sun Gear Driving	1942 438	2400 662	2400 662	2400 662	2400 662	2400 662	2400 662
21-133-43	SNAP RING, Front Clutch, Inner, 3 1/4" O. D. . . .	---- ---	2124 824	2124 824	2124 824	2124 824	2124 824	2124 824
	Front Clutch, 7" O. D.. .	---- ---	1942 063	1942 063	1942 063	1942 063	1942 063	1942 063
	Front Clutch, Outer, .060" thk., 5 1/4" O. D.	1942 421	---- ---	---- ---	---- ---	---- ---	---- ---	---- ---
	Rear, Clutch Retainer, .060" thk., 5 1/4" O. D.	1942 421	---- ---	---- ---	---- ---	---- ---	---- ---	---- ---
	Rear Clutch Retainer, .060" thk., 7" O. D. . . .	---- ---	1942 063	1942 063	1942 063	1942 063	1942 063	1942 063
	Rear Clutch Retainer, .074" thk., 7" O. D. . . .	---- ---	1942 064	1942 064	1942 064	1942 064	1942 064	1942 064
	Rear Clutch Retainer, .088" thk., 7" O. D. . .	---- ---	1942 065	1942 065	1942 065	1942 065	1942 065	1942 065
	Rear, Clutch Retainer, .106" thk., 7" O.D. . .	---- ---	2466 811	2466 811	2466 811	2466 811	2466 811	---- ---
21-133-46	RING, Sun Gear Driving Shell Lock (2)	1942 439	1736 521	1736 521	1736 521	1736 521	1736 521	1736 521
21-133-47	PLATE, Sun Gear Driving Shell Thrust (★).	2124 258	1942 080	1942 080	1942 080	1942 080	1942 080	1942 080
21-133-48	WASHER, Sun Gear Driving Shell Thrust (★)	2400 528	1942 081	1942 081	1942 081	1942 081	1942 081	1942 081
21-133-62	SPACER, Rear Clutch Piston Spring	---- ---	2466 804	2466 804	2466 804	2466 804	2466 804	2466 804
21-133-65	WASHER, Front Clutch Thrust (2)	2204 369	---- ---	---- ---	---- ---	---- ---	---- ---	---- ---
	Front Clutch Thrust, Front, Green, .061" thk., (★)	---- ---	2204 622	2204 622	2204 622	2204 622	2204 622	2204 622
	Front Clutch Thrust, Front, Red, .084" thk., (★)	---- ---	2204 623	2204 623	2204 623	2204 623	2204 623	2204 623
	Front Clutch Thrust, Front, Yellow, .102" thk., (★)	---- ---	2400 284	2400 284	2400 284	2400 284	2400 284	2400 284
	Front Clutch Thrust, Rear, Green, .061 thk., (★)	---- ---	2204 622	2204 622	2204 622	2204 622	2204 622	2204 622
21-134-0	**TRANSMISSION FRONT AND REAR PLANET PINION CARRIER AND COMPONENTS**							
21-134-5	CARRIER, w/PINION and WASHERS, Front	2525 018	2466 537	2466 537	2466 537	2466 537	2466 537	2466 537
	Rear	2525 019	2466 539	2466 539	2466 539	2466 539	2466 539	2466 539
21-134-8	PINION, Front and Rear Planet (6)	⊟2464 257	⊟2400 667	⊟2400 667	⊟2400 667	⊟2400 667	⊟2400 667	⊟2400 667

TYPE LETTERS Indicate: V - Valiant, L - Dart, R - Belvedere, W - Coronet, P - Plymouth, D - Dodge, C - Chrysler, Y - Imperial

★Indicates use as required. Numerals in parentheses ( ) refer to notes. Printed in U.S.A.

⊟Indicates parts not listed in any previous parts book. Prices and specifications subject to change without notice.

March 1966 Supersedes May 1965. * Indicates change or addition.

MyMopar.com

AUTOMATIC TRANSMISSION

NOTE: All quantities are one (1) unless otherwise indicated in parenthesis.

	TRANSMISSION	2466 144 A904LA	2466 149 A727B	2466 147 A727B	2466 148 A727B	2466 151 A727A	2466 152 A727A	2466 166 A727A
21-134-0	**TRANSMISSION FRONT AND REAR PLANET PINION CARRIER AND COMPONENTS - Cont'd**							
21-134-9	SHAFT, Front and Rear Planet Pinion (6)	⊟2408 019	⊟2464 178	⊟2464 178	⊟2464 178	⊟2464 178	⊟2464 178	⊟2464 178
21-134-10	WASHER, Front and Rear Planet Pinion (12).	⊟2400 142	⊟2204 648	⊟2204 648	⊟2204 648	⊟2204 648	⊟2204 648	⊟2204 648
21-134-11	ROLLER, Front and Rear Planet Pinion (114) .	⊟2464 259	---- ---	---- ---	---- ---	---- ---	---- ---	---- ---
	(138)	---- ---	⊟2204 647	⊟2204 647	⊟2204 647	⊟2204 647	⊟2204 647	⊟2204 647
21-134-12	RING, Front and Rear Planet Pinion Roller Thrust (12)	⊟2400 141	⊟2204 649	⊟2204 649	⊟2204 649	⊟2204 649	⊟2204 649	⊟2204 649
21-134-30	WASHER, Front and Rear Planet Pinion Carrier Thrust, w/3 Tabs (2)	---- ---	1942 081	1942 081	1942 081	1942 081	1942 081	1942 081
21-134-36	SUPPORT, Front Annulus Gear	2464 902	---- ---	---- ---	---- ---	---- ---	---- ---	---- ---
	Rear	1942 450	---- ---	---- ---	---- ---	---- ---	---- ---	---- ---
21-134-38	GEAR, Front Annulus . .	1942 443	2400 663	2400 663	2400 663	2400 663	2400 663	2400 663
	Rear	1942 443	2400 665	2400 665	2400 665	2400 665	2400 665	2400 665
21-134-40	SNAP RING, Front Annulus Gear Support . .	1942 448	---- ---	---- ---	---- ---	---- ---	---- ---	---- ---
	Front Annulus Gear . . .	1942 444	---- ---	---- ---	---- ---	---- ---	---- ---	---- ---
	Rear	1942 444	---- ---	---- ---	---- ---	---- ---	---- ---	---- ---
21-134-45	WASHER, Front Annulus Gear Support Thrust. . .	1942 447	---- ---	---- ---	---- ---	---- ---	---- ---	---- ---
	PLATE, Rear Annulus Gear Thrust	---- ---	---- ---	2400 580	---- ---	---- ---	---- ---	---- ---
21-136-0	**TRANSMISSION BANDS**							
21-136-5	BAND, Kickdown	2204 792	2124 342	2124 342	2124 342	2124 342	2124 342	2124 342
21-136-15	STRUT, Kickdown Band .	1630 896	2124 848	2124 848	2124 848	2124 848	2124 848	2124 848
	ANCHOR, Kickdown Band.	---- ---	1942 120	1942 120	1942 120	1942 120	1942 120	1942 120
21-136-17	SCREW, Kickdown Band Adjusting	1942 477	2400 389	2400 389	2400 389	2400 389	2400 389	2400 389
21-136-20	LEVER, Kickdown Band .	2124 579	2125 067	2125 067	2125 067	2204 952	2204 952	2204 952
21-136-23	SHAFT, Kickdown Band Lever	1942 132	1942 132	1942 132	1942 132	1942 132	1942 132	1942 132
21-136-30	BAND, Reverse	1942 487	1942 133	1942 133	1942 133	1942 133	1942 133	1942 133
21-136-41	STRUT, Reverse Band . .	1942 497	2204 823	2204 823	2204 823	2204 823	2204 823	2204 823

TYPE LETTERS Indicate: V - Valiant, L - Dart, R - Belvedere, W - Coronet, P - Plymouth, D - Dodge, C - Chrysler, Y - Imperial

★Indicates use as required. Numerals in parentheses ( ) refer to notes. Printed in U.S.A.

⊟Indicates parts not listed in any previous parts book. Prices and specifications subject to change without notice.

* Indicates change or addition. March 1966 Supersedes May 1965.

MyMopar.com

AUTOMATIC TRANSMISSION

NOTE: All quantities are one (1) unless otherwise indicated in parenthesis.

TRANSMISSION	2466 144 A904LA	2466 149 A727B	2466 147 A727B	2466 148 A727B	2466 151 A727A	2466 152 A727A	2466 166 A727A
21-136-0 TRANSMISSION BANDS - Cont'd							
21-136-44 LINK, Reverse Band, w/ANCHOR	2464 439	2204 820	2204 820	2204 820	2204 820	2204 820	2204 820
21-136-47 LEVER, Reverse Band, w/STEM	1942 491	1942 137	1942 137	1942 137	1942 137	1942 137	1942 137
Reverse Band, Short . .	2464 851	2124 493	2124 493	2124 493	2124 493	2124 493	2124 493
21-136-49 SHAFT, Reverse Band Lever	1942 493	2124 857	2124 857	2124 857	2124 857	2124 857	2124 857
21-136-52 SCREW, Reverse Band Adjusting	1942 543	1942 141	1942 141	1942 141	1942 141	1942 141	1942 141
21-136-55 SEAL, Reverse Band Lever Shaft	---- ---	1550 711	1550 711	1550 711	1550 711	1550 711	1550 711
21-136-65 DRUM, Reverse	2466 008	2464 384	2464 384	2464 384	2464 384	2464 384	2464 384
21-136-228 CAM and RETAINER PACKAGE, "O" Running Clutch	2421 281	---- ---	---- ---	---- ---	---- ---	---- ---	---- ---
21-136-229 SCREW, Cam (6)	138 212	---- ---	---- ---	---- ---	---- ---	---- ---	---- ---
21-136-231 CAM, "O" Running Clutch	---- ---	1942 095	1942 095	1942 095	1942 095	1942 095	1942 095
21-136-232 RACE, "O" Running Clutch	---- ---	2124 844	2124 844	2124 844	2124 844	2124 844	2124 844
UP TO Trans. Ser. No. 1434877	2464 864	---- ---	---- ---	---- ---	---- ---	---- ---	---- ---
AFTER Trans. Ser. No. 1434877	2466 911	---- ---	---- ---	---- ---	---- ---	---- ---	---- ---
21-136-233 RETAINER, "O" Running Clutch Spring	---- ---	1942 096	1942 096	1942 096	1942 096	1942 096	1942 096
21-136-235 ROLLER, "O" Running Clutch Cam (12)	*2464 888	* 670 776	* 670 776	* 670 776	* 670 776	* 670 776	* 670 776
21-136-236 SPRING, "O" Running Clutch Cam Roller (12).	*2464 446	*1942 187	*1942 187	*1942 187	*1942 187	*1942 187	*1942 187
21-137-0 TRANSMISSION SERVOS							
21-137-5 PISTON, Kickdown Servo.	1942 478	2124 850	2124 850	2124 850	2124 850	2124 850	2124 850
21-137-8 RING, Kickdown Servo Piston Seal, Small . . .	1672 287	2124 851	2124 851	2124 851	2124 851	2124 851	2124 851
Large	1636 470	1942 123	1942 123	1942 123	1942 123	1942 123	1942 123
Kickdown Servo Guide Seal	*1636 470	1942 123	1942 123	1942 123	1942 123	1942 123	1942 123
21-137-11 ROD, Kickdown Servo Piston	1942 482	2124 853	2124 853	2124 853	2124 853	2124 853	2124 853
21-137-13 GUIDE, Kickdown Servo .	1942 485	2124 856	2124 856	2124 856	2124 856	2124 856	2124 856

TYPE LETTERS Indicate: V - Valiant, L - Dart, R - Belvedere, W - Coronet, P - Plymouth, D - Dodge, C - Chrysler, Y - Imperial

★Indicates use as required. Numerals in parentheses ( ) refer to notes. Printed in U.S.A.

⊟Indicates parts not listed in any previous parts book. Prices and specifications subject to change without notice.

March 1966 Supersedes May 1965. * Indicates change or addition.

MyMopar.com

AUTOMATIC TRANSMISSION

NOTE: All quantities are one (1) unless otherwise indicated in parenthesis.

	TRANSMISSION	2466 144 A904LA	2466 149 A727B	2466 147 A727B	2466 148 A727B	2466 151 A727A	2466 152 A727A	2466 166 A727A
21-137-0	**TRANSMISSION SERVOS - Cont'd**							
21-137-19	SNAP RING, Kickdown Servo	1942 486	---- ---	---- ---	---- ---	---- ---	---- ---	---- ---
	Kickdown Servo Piston Rod Guide	---- ---	1942 130	1942 130	1942 130	1942 130	1942 130	1942 130
21-137-22	SPRING, Kickdown Servo Piston	1942 481	---- ---	---- ---	---- ---	---- ---	---- ---	---- ---
	Inner	---- ---	2124 852	2124 852	2124 852	2124 852	2124 852	2124 852
	Outer	---- ---	2125 069	2125 069	2125 069	2125 069	2125 069	2125 069
21-137-35	PISTON, Reverse Servo	2464 461	2464 689	2464 689	2464 689	2464 689	2464 689	2464 689
21-137-41	SPRING, Reverse Servo Cushion	1823 941	1823 941	1823 941	1823 941	1823 941	1823 941	1823 941
21-137-44	SNAP RING, Reverse Servo Piston Plug	1823 940	1823 940	1823 940	1823 940	1823 940	1823 940	1823 940
21-137-47	PLUG, Reverse Servo Piston	1942 152	1942 152	1942 152	1942 152	1942 152	1942 152	1942 152
21-137-50	SEAL, Reverse Servo Piston, Rubber	2464 462	2464 481	2464 481	2464 481	2464 481	2464 481	2464 481
21-137-53	SPRING, Reverse Servo Piston	1942 458	1942 149	1942 149	1942 149	1942 149	1942 149	1942 149
21-137-56	RETAINER, Reverse Servo Piston Spring	2464 463	1942 150	1942 150	1942 150	1942 150	1942 150	1942 150
21-137-59	SNAP RING, Reverse Servo Piston Spring Retainer	2464 464	1942 130	1942 130	1942 130	1942 130	1942 130	1942 130
21-137-200	PISTON, Accumulator	1942 153	1942 153	1942 153	1942 153	1942 153	1942 153	1942 153
21-137-202	RING, Accumulator Piston Seal, Small	*1941 831	*1941 831	*1941 831	*1941 831	*1941 831	*1941 831	*1941 831
	Large	2124 255	2124 255	2124 255	2124 255	2124 255	2124 255	2124 255
21-137-205	SPRING, Accumulator Piston	2125 109	2125 109	2125 109	2125 109	2464 076	2464 076	2125 109
21-138-0	**TRANSMISSION GOVERNOR**							
21-138-2	REPAIR PACKAGE, Governor	2585 292	---- ---	2275 498	2298 514	2275 498	2275 498	2275 498
	REPAIR PACKAGE, Governor, UP TO Trans. Ser. No. 1586839	---- ---	*2275 498	---- ---	---- ---	---- ---	---- ---	---- ---
	AFTER Trans. Ser. No. 1586839	---- ---	*2585 589	---- ---	---- ---	---- ---	---- ---	---- ---
21-138-7	SNAP RING, Governor Body	6022 583	6022 817	6022 817	6022 817	6022 817	6022 817	6022 817
21-138-10	SUPPORT, Governor	2466 373	2466 371	2466 371	2466 371	2466 371	2466 371	2466 371

TYPE LETTERS Indicate: V - Valiant, L - Dart, R - Belvedere, W - Coronet, P - Plymouth, D - Dodge, C - Chrysler, Y - Imperial

★Indicates use as required. Numerals in parentheses ( ) refer to notes. Printed in U.S.A.

⊟Indicates parts not listed in any previous parts book. Prices and specifications subject to change without notice.

• Indicates change or addition.

March 1966 Supersedes May 1965.

MyMopar.com

AUTOMATIC TRANSMISSION

NOTE: All quantities are one (1) unless otherwise indicated in parenthesis.

	TRANSMISSION	2466 144 A904LA	2466 149 A727B	2466 147 A727B	2466 148 A727B	2466 151 A727A	2466 152 A727A	2466 166 A727A
21-138-0	**TRANSMISSION GOVERNOR - Cont'd.**							
21-138-13	WEIGHT, Governor							
	Outer	1636 461	1636 461	1636 461	1636 461	1636 461	1636 461	1636 461
	Inner	1636 462	1636 462	1636 462	1636 462	1636 462	1636 462	1636 462
21-138-15	SPRING, Governor							
	Weight	1949 859	---- ---	1949 858	1949 858	1949 858	1949 858	1949 858
	SRRING, Governor Weight, UP TO Trans. Ser. No. 1586839	---- ---	*1949 858	---- ---	---- ---	---- ---	---- ---	---- ---
	AFTER Trans. Ser. No. 1586839	---- ---	*2124 662	---- ---	---- ---	---- ---	---- ---	---- ---
21-138-19	SNAP RING, Governor							
	Weight, Outer	1636 465	1636 465	1636 465	1636 465	1636 465	1636 465	1636 465
	Inner	1636 464	1636 464	1636 464	1636 464	1636 464	1636 464	1636 464
21-138-21	LOCK, Governor Body Bolt (2)	2125 024	2125 024	2125 024	2125 024	2125 024	2125 024	2125 024
21-138-23	VALVE, Governor	2124 663	2124 663	2124 663	2124 663	2124 663	2124 663	2124 663
21-138-26	SHAFT, Governor Valve	1556 082	1556 082	1556 082	1556 082	1556 082	1556 082	1556 082
21-138-29	SNAP RING, Governor Valve Shaft (2)	1638 461	1638 461	1638 461	1638 461	1638 461	1638 461	1638 461
21-138-38	RING, Governor Support Seal (2)	1942 109	1942 109	1942 109	1942 109	1942 109	1942 109	1942 109
21-139-0	**TRANSMISSION VALVE BODY AND VALVES**							
21-139-4	BODY, w/Transfer PLATE, Complete	2466 515	2538 036	2538 036	2538 036	2538 036	2538 036	2464 693
21-139-9	VALVE, Manual	2464 675	2464 675	2464 675	2464 675	2464 675	2464 675	2464 675
21-139-12	LEVER, Manual Valve	2464 676	2464 676	2464 676	2464 676	2464 676	2464 676	2464 676
21-139-24	SPRING, Manual Valve Lever Detent	1942 225	1942 225	1942 225	1942 225	1942 225	1942 225	1942 225
21-139-30	VALVE, Throttle	1636 423	1636 423	1636 423	1636 423	1636 423	1636 423	1636 423
21-139-33	SPRING, Throttle Valve	1949 847	1949 847	1949 847	1949 847	1949 847	1949 847	1949 847
21-139-47	SEAL, Throttle Lever Shaft	2466 548	2466 548	2466 548	2466 548	2466 548	2466 548	2466 548
21-139-49	SNAP RING, Throttle Valve Lever Shaft	1539 430	1539 430	1539 430	1539 430	1539 430	1539 430	1539 430
21-139-50	LEVER, Throttle Valve	2464 390	2464 390	2464 390	2464 390	2464 390	2464 390	2464 390
21-139-63	PLUG, Regulator Valve Throttle Pressure	1942 245	1942 245	1942 245	1942 245	1942 245	1942 245	1942 245
	Regulator Valve Line Pressure	1942 218	1942 218	1942 218	1942 218	1942 218	1942 218	1942 218

TYPE LETTERS Indicate: V - Valiant, L - Dart, R - Belvedere, W - Coronet, P - Plymouth, D - Dodge, C - Chrysler, Y - Imperial

★Indicates use as required. Numerals in parentheses ( ) refer to notes. Printed in U.S.A.

⊟Indicates parts not listed in any previous parts book. Prices and specifications subject to change without notice.

March 1966 Supersedes May 1965. * Indicates change or addition

MyMopar.com

AUTOMATIC TRANSMISSION

NOTE: All quantities are one (1) unless otherwise indicated in parenthesis.

TRANSMISSION	2466 144 A904LA	2466 149 A727B	2466 147 A727B	2466 148 A727B	2466 151 A727A	2466 152 A727A	2466 166 A727A
21-139-0 TRANSMISSION VALVE BODY AND VALVES - Cont'd							
21-139-64 SLEEVE, Regulator Valve Line Pressure Plug . . .	1942 213	1942 213	1942 213	1942 213	1942 213	1942 213	1942 213
21-139-67 VALVE, Regulator	2124 733	2124 733	2124 733	2124 733	2124 733	2124 733	2124 733
21-139-68 SPRING, Regulator Valve.	2124 734	2124 734	2124 734	2124 734	2124 734	2124 734	2124 734
21-139-71 RETAINER, Regulator Valve Spring	2204 975	2204 975	2204 975	2204 975	2204 975	2204 975	2204 975
21-139-74 SCREW, Line Pressure Adjusting	2124 736	2124 736	2124 736	2124 736	2124 736	2124 736	2124 736
Throttle Pressure Adjusting	*6023 343	6023 343	6023 343	6023 343	6023 343	6023 343	6023 343
21-139-76 NUT, Throttle Pressure Adjusting Screw Lock . .	1949 523	1949 523	1949 523	1949 523	1949 523	1949 523	1949 523
Line Pressure Adjusting Screw	2124 737	2124 737	2124 737	2124 737	2124 737	2124 737	2124 737
21-139-78 VALVE, Kickdown	1941 623	1941 623	1941 623	1941 623	1941 623	1941 623	1941 623
PLUG, Kickdown Detent	1941 624	1941 624	1941 624	1941 624	1941 624	1941 624	1941 624
21-139-95 VALVE, Shuttle	1854 275	1854 275	1854 275	1854 275	1854 275	1854 275	1854 275
PLUG, Shuttle Valve . . .	1854 274	1854 274	1854 274	1854 274	1854 274	1854 274	1854 274
21-139-98 SNAP RING, Shuttle Valve	1539 430	1539 430	1539 430	1539 430	1539 430	1539 430	1539 430
21-139-101 SPRING, Shuttle Valve . .	2124 697	2124 697	2124 697	2124 697	2124 697	2124 697	2124 697
21-139-105 VALVE, 1-2 Shift.	1941 602	1941 602	1941 602	1941 602	1941 602	1941 602	1941 602
PLUG, 1-2 Shift Valve . .	1941 603	1941 603	1941 603	1941 603	1941 603	1941 603	1941 603
VALVE, 2-3 Shift.	1941 600	1941 600	1941 600	1941 600	1941 600	1941 600	1941 600
PLUG, 2-3 Shaft Valve . .	1941 601	1941 601	1941 601	1941 601	1941 601	1941 601	1941 601
21-139-108 SPRING, 1-2 Shift Valve .	2204 547	2204 547	2204 547	2204 547	2204 547	2204 547	2204 547
2-3 Shift Valve	1942 231	1942 231	1942 231	1942 231	1942 231	1942 231	1942 231
21-139-117 VALVE, Torque Converter Control	2124 256	2124 256	2124 256	2124 256	2124 256	2124 256	2124 256
21-139-118 SPRING, Torque Converter Control Valve	2124 257	2124 257	2124 257	2124 257	2124 257	2124 257	2124 257
21-139-135 COVER, Regulator Valve	2205 034	2205 034	2205 034	2205 034	2205 034	2205 034	2205 034
Shift Valve	1942 228	1942 228	1942 228	1942 228	1942 228	1942 228	1942 228
Shift Valve Plug	1942 230	1942 230	1942 230	1942 230	1942 230	1942 230	1942 230
Shuttle Valve	1942 227	1942 227	1942 227	1942 227	1942 227	1942 227	1942 227
Reverse Blocker Valve .	2205 034	2205 034	2205 034	2205 034	2205 034	2205 034	2205 034
21-139-140 PLATE, Valve Body . . .	2464 887	2538 035	2538 035	2538 035	2538 035	2538 035	2204 576
21-139-143 VALVE, Front and Rear Pump Check (2)	2204 599	2204 599	2204 599	2204 599	2204 599	2204 599	2204 599

TYPE LETTERS Indicate: V - Valiant, L - Dart, R - Belvedere, W - Coronet, P - Plymouth, D - Dodge, C - Chrysler, Y - Imperial

★Indicates use as required. Numerals in parentheses ( ) refer to notes. Printed in U.S.A.

⊟Indicates parts not listed in any previous parts book. Prices and specifications subject to change without notice.

March 1966. * Indicates change or addition.

MyMopar.com

AUTOMATIC TRANSMISSION

NOTE: All quantities are one (1) unless otherwise indicated in parenthesis.

TRANSMISSION	2466 144 A904LA	2466 149 A727B	2466 147 A727B	2466 148 A727B	2466 151 A727A	2466 152 A727A	2466 166 A727A
21-139-0 TRANSMISSION VALVE BODY AND VALVES - Cont'd							
21-139-144 SPRING, Front and Rear Pump Check Valve (2) . .	1942 233	1942 233	1942 233	1942 233	1942 233	1942 233	1942 233
21-139-147 PLATE, Transfer . . .	2400 340	2400 340	2400 340	2400 340	2400 340	2400 340	2400 340
21-139-154 SUPPORT, Transfer Plate	1942 237	1942 237	1942 237	1942 237	1942 237	1942 237	1942 237
21-139-190 VALVE, Reverse Blocker.	2464 778	2464 778	2464 778	2464 778	2464 778	2464 778	2464 778
21-139-191 SEAL, Reverse Blocker Valve	2204 885	2204 885	2204 885	2204 885	2204 885	2204 885	2204 885
21-139-193 SPRING, Reverse Blocker.	2204 890	2204 890	2204 890	2204 890	2204 890	2204 890	2204 890

NOTE: All quantities are one (1) unless otherwise indicated in parenthesis.

TRANSMISSION	⊟2538 351 A904LA	⊟2538 353 A904LA	⊟2538 350 A904LA
21-01-0 TRANSMISSION SETS OR PACKAGES			
21-01-3 SEAL and GASKET PACKAGE	*2495 091	*2495 091	*2495 091
21-03-0 TRANSMISSION CASE			
21-03-1 CASE	*2464 442	*2464 442	*2464 442
21-04-0 TRANSMISSION CASE EXTENSION			
21-04-1 EXTENSION	*2464 690	*2466 290	*2464 690
21-04-2 GASKET	*2205 322	*2205 322	*2205 322
21-04-6 SCREW, Extension or Sprag, Long	*2464 593	*2464 593	*2464 593
Short (5)	*6023 514	*6023 514	*6023 514
21-04-11 BEARING	*2464 545	*2464 545	*2464 545
21-04-12 SNAP RING	*2464 855	*2464 855	*2464 855
21-04-18 WASHER, Extension or Sprag Screw	*2464 595	*2464 595	*2464 595
21-05-0 TRANSMISSION OUTPUT SHAFT			
21-05-1 SHAFT, w/PLUG	*2464 854	*2466 411	*2464 854
21-05-12 OIL SEAL, Output Shaft	*2464 482	*2464 482	*2464 482
21-05-19 SNAP RING, Output Shaft, .040" (★)	*6024 822	*6024 822	*6024 822
.048" Blue (★)	*6024 823	*6024 823	*6024 823
21-05-35 WASHER, Output Thrust, .052" Natural (★)	*2466 090	*2466 090	*2466 090
.068" Red (★)	*2466 169	*2466 169	*2466 169
.083" Black (★)	*2466 170	*2466 170	*2466 170

TYPE LETTERS Indicate: V - Valiant, L - Dart, R - Belvedere, W - Coronet, P - Plymouth, D - Dodge, C - Chrysler, Y - Imperial

★Indicates use as required. Numerals in parentheses ( ) refer to notes. Printed in U.S.A.

⊟Indicates parts not listed in any previous parts book. Prices and specifications subject to change without notice.

* Indicates change or addition.

MyMopar.com

AUTOMATIC TRANSMISSION

NOTE: All quantities are one (1) unless otherwise indicated in parenthesis.

	TRANSMISSION	⊟2538 351 A904LA	⊟2538 353 A904LA	⊟2538 350 A904LA
21-117-0	**TRANSMISSION OIL FILTER - Cont'd**			
	NOTE: See Code 9-46-27 for Tubes.			
21-117-1	FILTER or STRAINER	*2466 849	*2466 849	*2466 849
	SCREW (3)	*6023 524	*6023 524	*6023 524
21-117-5	GASKET, Oil Filter	*2205 202	*2205 202	*2205 202
21-118-0	**TRANSMISSION OIL PUMP**			
21-118-6	ROTOR PACKAGE, Frt. Pump	*2240 302	*2240 302	*2240 302
	Rr. Pump	*2495 090	*2495 090	*2495 090
21-118-34	PIN, Rr. Pump Rotor Drive	*2408 144	*2408 144	*2408 144
21-118-40	HOUSING, Front Pump, w/BUSHING	*2204 712	*2204 712	*2204 712
	Rear Pump	*1942 463	*1942 463	*1942 463
21-118-42	OIL SEAL, Front Oil Pump Housing, 2 1/4" O.D.	*2124 705	*2124 705	*2124 705
21-118-45	OIL SEAL, Front Pump Housing, 8 17/64" O.D.	*2204 709	*2204 709	*2204 709
21-118-47	BUSHING, Front Pump Housing	*2466 796	*2466 796	*2466 796
21-118-53	COVER, Rear Pump Housing	*2400 087	*2400 087	*2400 087
21-118-55	SCREW, Front Pump Housing, w/WASHER (★)	*6023 943	*6023 943	*6023 943
21-119-0	**TRANSMISSION OIL PAN**			
21-119-3	PAN, Oil	*2464 413	*2464 413	*2464 413
	SCREW (14)	*6023 355	*6023 355	*6023 355
21-119-5	GASKET, Oil Pan	*2205 299	*2205 299	*2205 299
21-129-0	**TRANSMISSION INPUT SHAFT AND TORQUE CONVERTER REACTION SHAFT**			
21-129-5	SHAFT, Input	*2464 315	*2464 315	*2464 315
21-129-7	RING, Input Shaft Seal (★)	*1941 831	*1941 831	*1941 831
	SNAP RING, Input Shaft	*6022 859	*6022 859	*6022 859
21-129-10	SHAFT, Reaction, w/Support, 27T., 6 7/16" lgh.	*1942 419	*1942 419	*1942 419
21-129-13	RING, Reaction Shaft Support Seal (2)	*1942 389	*1942 389	*1942 389
21-129-23	BUSHING, Reaction Shaft	*2205 302	*2205 302	*2205 302
21-129-24	GASKET, Reaction Shaft Support	*1942 390	*1942 390	*1942 390
21-133-0	**TRANSMISSION CLUTCH**			
21-133-5	CLUTCH, Front	---- ---	---- ---	*2464 903
21-133-7	RETAINER, Front Clutch Piston, w/BUSHING	*2464 897	*2464 897	*2464 897
	Rear Clutch	⊟2466 280	⊟2466 280	⊟2466 280
21-133-10	BUSHING, Front Clutch Retainer	*2205 303	*2205 303	*2205 303

TYPE LETTERS Indicate: V - Valiant, L - Dart, R - Belvedere, W - Coronet, P - Plymouth, D - Dodge, C - Chrysler, Y - Imperial

★Indicates use as required. Numerals in parentheses ( ) refer to notes. Printed in U.S.A.
⊟Indicates parts not listed in any previous parts book. Prices and specifications subject to change without notice.
• Indicates change or addition.

March 1966.
MyMopar.com

AUTOMATIC TRANSMISSION

NOTE: All quantities are one (1) unless otherwise indicated in parenthesis.

TRANSMISSION	⊟2538 351 A904LA	⊟2538 353 A904LA	⊟2538 350 A904LA
21-133-0 TRANSMISSION CLUTCH - Cont'd			
21-133-15 PISTON, Front Clutch	*1942 395	*1942 395	*1942 395
Rear Clutch	⊟2466 278	⊟2466 278	⊟2466 278
21-133-17 SEAL, Front Clutch Piston, Inner	*1942 396	*1942 396	*1942 396
Outer	*1942 397	*1942 397	*1942 397
Rear Clutch Piston, Inner	*2125 187	*2125 187	*2125 187
Outer	*1942 397	*1942 397	*1942 397
21-133-20 SPRING, Front Clutch Piston Return	*2205 233	*2205 233	*2124 573
Rear Clutch Piston	*1942 414	*1942 414	*1942 414
21-133-22 RETAINER, Front Clutch Piston Spring	*1942 399	*1942 399	*1942 399
21-133-25 SNAP RING, Rear Clutch Retainer, .098" thk., 5 1/4" O.D.	⊟2538 617	⊟2538 617	⊟2538 617
.076" thk., 5 1/4" O.D. (★)	*1942 423	*1942 423	*1942 423
Front Clutch, Inner, 2 7/16" O.D.	*1942 400	---- ---	---- ---
21-133-31 SPRING, Rear Clutch Wave	⊟2466 283	⊟2466 283	⊟2466 283
21-133-36 DISC, Front Clutch (★)	*2205 203	*2205 203	*2205 203
Rear Clutch (4)	⊟2466 349	⊟2466 349	⊟2466 349
21-133-38 PLATE, Front Clutch (★)	*1942 403	*1942 403	*1942 403
Rear Clutch (★)	*1942 403	*1942 403	*1942 403
21-133-39 PLATE, Front Clutch Pressure	*2464 892	*2464 892	*2464 892
Rear Clutch Pressure, Front	⊟2466 281	⊟2466 281	⊟2466 281
Rear Clutch Pressure, Rear	*2464 892	*2464 892	*2464 892
21-133-40 GEAR, Sun, w/BUSHING	*1942 434	*1942 434	*1942 434
21-133-42 SHELL, Sun Gear Driving	*1942 438	*1942 438	*1942 438
21-133-43 SNAP RING, Front Clutch, Outer, .060" thk., 5 1/4" O.D.	*1942 421	*1942 421	*1942 421
Front Clutch, Inner, 2 7/16" O.D.	---- ---	*1942 400	*1942 400
Rear Clutch Retainer, .060" thk., 5 1/4" O.D.	*1942 421	*1942 421	*1942 421
.068" thk., 5 1/4" O.D.	---- ---	*1942 422	*1942 422
.076" thk., 5 1/4" O.D.	---- ---	*1942 423	*1942 423
21-133-46 RING, Sun Gear Driving Shell Lock (2)	*1942 439	*1942 439	*1942 439
21-133-47 PLATE, Sun Gear Driving Shell Thrust (2)	*2124 258	*2124 258	*2124 258
21-133-48 WASHER, Sun Gear Driving Shell Thrust (2)	*2400 528	*2400 528	*2400 528
21-133-62 SPACER, Rear Clutch Piston	⊟2466 282	⊟2466 282	⊟2466 282
21-133-65 WASHER, Front Clutch Thrust, Front and Rear, .042" thk. (2)	---- ---	*2204 369	*2204 369
Front Clutch Thrust (2)	*2204 369	---- ---	---- ---

21-134-0 TRANSMISSION FRONT AND REAR PLANET PINION CARRIER AND COMPONENTS

21-134-5 CARRIER, w/PINION and WASHERS, Front	*2525 018	*2538 251	*2538 251
Rear	*2525 019	*2525 019	*2525 019
21-134-8 PINION, Front and Rear Planet (6)	⊟2464 257	⊟2464 257	⊟2464 257

TYPE LETTERS Indicate: V - Valiant, L - Dart, R - Belvedere, W - Coronet, P - Plymouth, D - Dodge, C - Chrysler, Y - Imperial

★Indicates use as required. Numerals in parentheses ( ) refer to notes. Printed in U.S.A.

⊟Indicates parts not listed in any previous parts book. Prices and specifications subject to change without notice.

March 1966. • Indicates change or addition.

MyMopar.com

AUTOMATIC TRANSMISSION

NOTE: All quantities are one (1) unless otherwise indicated in parenthesis.

TRANSMISSION	⊟2538 351 A904LA	⊟2538 353 A904LA	⊟2538 350 A904LA
21-134-0 TRANSMISSION FRONT AND REAR PLANET PINION CARRIER AND COMPONENTS - Cont'd			
21-134-9 SHAFT, Front and Rear Planet Pinion (6)	⊟2408 019	⊟2408 019	⊟2408 019
21-134-10 WASHER, Front and Rear Planet Pinion (12)	⊟2400 142	⊟2400 142	⊟2400 142
21-134-11 ROLLER, Front and Rear Planet Pinion (114)	⊟2464 259	⊟2464 259	⊟2464 259
21-134-12 RING, Front and Rear Planet Pinion Thrust (12)	⊟2400 141	⊟2400 141	⊟2400 141
21-134-36 SUPPORT, Front Annulus Gear	*2464 902	*2538 253	*2538 253
Rear	*1942 450	*1942 450	*1942 450
21-134-38 GEAR, Front and Rear Annulus (2)	*1942 443	*1942 443	*1942 443
21-134-40 SNAP RING, Front and Rear Annulus Gear (2)	*1942 444	*1942 444	*1942 444
Front Annulus Gear Support	*1942 448	*1942 448	*1942 448
21-134-45 WASHER, Front Annulus Gear Support Thrust	*1942 447	*1942 447	*1942 447
21-136-0 TRANSMISSION BANDS			
21-136-5 BAND, Kickdown	*2204 792	*2204 792	*2204 792
21-136-15 STRUT, Kickdown Band	*1630 896	*1630 896	*1630 896
21-136-17 SCREW, Kickdown Band Adjusting	*1942 477	*1942 477	*1942 477
21-136-20 LEVER, Kickdown Band	*2124 579	*2124 579	*2124 579
21-136-23 SHAFT, Kickdown Band Lever	*1942 132	*1942 132	*1942 132
21-136-30 BAND, Reverse	*1942 487	*1942 487	*1942 487
21-136-41 STRUT, Reverse Band	*1942 497	*1942 497	*1942 497
21-136-44 LINK, Reverse Band, w/ANCHOR	*2464 439	*2464 439	*2464 439
21-136-47 LEVER, Reverse Band, w/STEM	*1942 491	*1942 491	*1942 491
Reverse Band, Short	*2464 851	*2464 851	*2464 851
21-136-49 SHAFT, Reverse Band Lever	*1942 493	*1942 493	*1942 493
21-136-52 SCREW, Reverse Band Adjusting	*1942 543	*1942 543	*1942 543
21-136-65 DRUM, Reverse	*2466 008	*2466 008	*2466 008
21-136-228 CAM and RETAINER PACKAGE, "O" Running Clutch	*2421 281	*2421 281	*2421 281
21-136-229 SCREW, Cam (6)	* 138 212	---- ---	---- ---
SCREW and WASHER, Cam (6)	---- ---	*1823 543	*1823 543
21-136-232 RACE, "O" Running Clutch	*2466 911	*2466 911	*2466 911
21-136-235 ROLLER, "O" Running Clutch Cam (12)	*2464 888	*2464 888	*2464 888
21-136-236 SPRING, "O" Running Clutch Cam Roller (12)	*2464 446	*2464 446	*2464 446

TYPE LETTERS Indicate: V - Valiant, L - Dart, R - Belvedere, W - Coronet, P - Plymouth, D - Dodge, C - Chrysler, Y - Imperial

★Indicates use as required. Numerals in parentheses ( ) refer to notes. Printed in U.S.A.
⊟Indicates parts not listed in any previous parts book. Prices and specifications subject to change without notice.
* Indicates change or addition.

MyMopar.com

AUTOMATIC TRANSMISSION

NOTE: All quantities are one (1) unless otherwise indicated in parenthesis.

TRANSMISSION		⊟2538 351 A904LA	⊟2538 353 A904LA	⊟2538 350 A904LA
21-137-0 TRANSMISSION SERVOS				
21-137-5	PISTON, Kickdown Servo	*1942 478	*1942 478	*1942 478
21-137-8	RING, Kickdown Servo Piston Seal, Small	*1672 287	*1672 287	*1672 287
	Large	*1636 470	*1636 470	*1636 470
	Kickdown Servo Guide Seal	*1636 470	*1636 470	*1636 470
21-137-11	ROD, Kickdown Servo Piston	*1942 482	*1942 482	*1942 482
21-137-13	GUIDE, Kickdown Servo	*1942 485	*1942 485	*1942 485
21-137-19	SNAP RING, Kickdown Servo	*1942 486	*1942 486	*1942 486
21-137-22	SPRING, Kickdown Servo Piston	*1942 481	*1942 481	*1942 481
21-137-35	PISTON, Reverse Servo	*2464 461	*2464 461	*2464 461
21-137-41	SPRING, Reverse Servo	*1823 941	*1823 941	*1823 941
21-137-44	SNAP RING, Reverse Servo Piston Plug	*1823 940	*1823 940	*1823 940
21-137-47	PLUG, Reverse Servo Piston	*1942 152	*1942 152	*1942 152
21-137-50	SEAL, Reverse Servo Piston, Rubber	*2464 462	*2464 462	*2464 462
21-137-53	SPRING, Reverse Servo Piston	*1942 458	*1942 458	*1942 458
21-137-56	RETAINER, Reverse Servo Piston Spring	*2464 463	*2464 463	*2464 463
21-137-59	SNAP RING, Reverse Servo Piston Spring Retainer	*2464 464	*2464 464	*2464 464
21-137-200	PISTON, Accumulator	*1942 153	*1942 153	*1942 153
21-137-202	RING, Accumulator Piston Seal, Small	*1941 831	*1941 831	*1941 831
	Large	*2124 255	*2124 255	*2124 255
21-137-205	SPRING, Accumulator Piston	*2125 109	*2125 109	*2125 109
21-138-0 TRANSMISSION GOVERNOR				
21-138-2	REPAIR PACKAGE, Governor	*2585 292	*2196 998	*2196 998
21-138-7	SNAP RING, Governor Body	*6022 583	*6022 583	*6022 583
21-138-10	SUPPORT, Governor	*2466 373	*2466 373	*2466 373
21-138-13	WEIGHT, Governor Outer	*1636 461	*1636 461	*1636 461
	Inner	*1636 462	*1636 462	*1636 462
21-138-15	SPRING, Governor Weight	*1949 859	*1949 858	*2124 662
21-138-19	SNAP RING, Governor Weight, Outer	*1636 465	*1636 465	*1636 465
	Inner	*1636 464	*1636 464	*1636 464
21-138-21	LOCK, Governor Body Bolt (2)	*2125 024	*2125 024	*2125 024

TYPE LETTERS Indicate: V - Valiant, L - Dart, R - Belvedere, W - Coronet, P - Plymouth, D - Dodge, C - Chrysler, Y - Imperial

★Indicates use as required. Numerals in parentheses ( ) refer to notes. Printed in U.S.A.

⊟Indicates parts not listed in any previous parts book. Prices and specifications subject to change without notice.

March 1966. ✱Indicates change or addition.

MyMopar.com

AUTOMATIC TRANSMISSION

NOTE: All quantities are one (1) unless otherwise indicated in parenthesis.

TRANSMISSION	⊟2538 351 A904LA	⊟2538 353 A904LA	⊟2538 350 A904LA
21-138-0 TRANSMISSION GOVERNOR - Cont'd			
21-138-23 VALVE, Governor	*2124 663	*2124 663	*2124 663
21-138-26 SHAFT, Governor Valve	*1556 082	*1556 082	*1556 082
21-138-29 SNAP RING, Governor Valve Shaft (2)	*1638 461	*1638 461	*1638 461
21-138-38 RING, Governor Support Seal (2)	*1942 109	*1942 109	*1942 109
21-139-0 TRANSMISSION VALVE BODY AND VALVES			
21-139-4 BODY, w/Transfer PLATE, Complete	*2466 515	*2466 515	*2466 515
21-139-9 VALVE, Manual	*2464 675	*2464 675	*2464 675
21-139-12 LEVER, Manual Valve	*2464 676	*2464 676	*2464 676
21-139-24 SPRING, Manual Valve Lever Detent	*1942 225	*1942 225	*1942 225
21-139-30 VALVE, Throttle	*1636 423	*1636 423	*1636 423
21-139-33 SPRING, Throttle Valve	*1949 847	*1949 847	*1949 847
21-139-47 SEAL, Throttle Lever Shaft	*2466 548	*2466 548	*2466 548
21-139-49 SNAP RING, Throttle Valve Lever Shaft	*1539 430	*1539 430	*1539 430
21-139-50 LEVER, Throttle Valve	*2464 390	*2464 390	*2464 390
21-139-63 PLUG, Regulator Valve Throttle Pressure	*1942 245	*1942 245	*1942 245
Regulator Valve Line Pressure	*1942 218	*1942 218	*1942 218
21-139-64 SLEEVE, Regulator Valve Line Pressure Plug	*1942 213	*1942 213	*1942 213
21-139-67 VALVE, Regulator	*2124 733	*2124 733	*2124 733
21-139-68 SPRING, Regulator Valve	*2124 734	*2124 734	*2124 734
21-139-71 RETAINER, Regulator Valve Spring	*2204 975	*2204 975	*2204 975
21-139-74 SCREW, Line Pressure Adjusting	*2124 736	*2124 736	*2124 736
Throttle Pressure Adjusting	*6023 343	*6023 343	*6023 343
21-139-76 NUT, Throttle Pressure Adjusting Screw Lock	*1949 523	*1949 523	*1949 523
Line Pressure Adjusting Screw	*2124 737	*2124 737	*2124 737
21-139-78 VALVE, Kickdown	*1941 623	*1941 623	*1841 623
PLUG, Kickdown Detent	*1941 624	*1941 624	*1941 624
21-139-95 VALVE, Shuttle	*1854 275	*1854 275	*1854 275
PLUG, Shuttle Valve	*1854 274	*1854 274	*1854 274
21-139-98 SNAP RING, Shuttle Valve	*1539 430	*1539 430	*1539 430
21-139-101 SPRING, Shuttle Valve	*2124 697	*2124 697	*2124 697

TYPE LETTERS Indicate: V - Valiant, L - Dart, R - Belvedere, W - Coronet, P - Plymouth, D - Dodge, C - Chrysler, Y - Imperial

★Indicates use as required. Numerals in parentheses ( ) refer to notes. Printed in U.S.A.
⊟Indicates parts not listed in any previous parts book. Prices and specifications subject to change without notice.
* Indicates change or addition.

MyMopar.com

AUTOMATIC TRANSMISSION

NOTE: All quantities are one (1) unless otherwise indicated in parenthesis.

TRANSMISSION	⊟2538 351 A904LA	⊟2538 353 A904LA	⊟2538 350 A904LA
21-139-0 TRANSMISSION VALVE BODY AND VALVES - Cont'd			
21-139-105 VALVE, 1-2 Shift	*1941 602	*1941 602	*1941 602
PLUG, 1-2 Shift Valve	*1941 603	*1941 603	*1941 603
VALVE, 2-3 Shift	*1941 600	*1941 600	*1941 600
PLUG, 2-3 Shift Valve	*1941 601	*1941 601	*1941 601
21-139-108 SPRING, 1-2 Shift Valve	*2204 547	*2204 547	*2204 547
2-3 Shift Valve	*1942 231	*1942 231	*1942 231
21-139-117 VALVE, Torque Converter Control	*2124 256	*2124 256	*2124 256
21-139-118 SPRING, Torque Converter Control Valve	*2124 257	*2124 257	*2124 257
21-139-135 COVER, Regulator Valve	*2205 034	*2205 034	*2205 034
Shift Valve	*1942 228	*1942 228	*1942 228
Shift Valve Plug	*1942 230	*1942 230	*1942 230
Shuttle Valve	*1942 227	*1942 227	*1942 227
Reverse Block Valve	*2205 034	*2205 034	*2205 034
21-139-140 PLATE, Valve Body	*2464 887	*2464 887	*2464 887
21-139-143 VALVE, Front and Rear Pump Check (2)	*2204 599	*2204 599	*2204 599
21-139-144 SPRING, Front and Rear Pump Check Valve (2)	*1942 233	*1942 233	*1942 233
21-139-147 PLATE, Transfer	*2400 340	*2400 340	*2400 340
21-139-154 SUPPORT, Transfer Plate	*1942 237	*1942 237	*1942 237
21-139-190 VALVE, Reverse Blocker	*2464 778	*2464 778	*2464 778
21-139-191 SEAL, Reverse Blocker Valve	*2204 885	*2204 885	*2204 885
21-139-193 SPRING, Reverse Blocker	*2204 890	*2204 890	*2204 890

NOTES

TYPE LETTERS indicate: V - Valiant, L - Dart, R - Belvedere, W - Coronet, P - Plymouth, D - Dodge, C - Chrysler, Y - Imperial

★Indicates use as required. Numerals in parentheses ( ) refer to notes. Printed in U.S.A.

⊟Indicates parts not listed in any previous parts book. Prices and specifications subject to change without notice.

March 1966.

MyMopar.com

• Indicates change or addition.

GROUP 22 - WHEELS

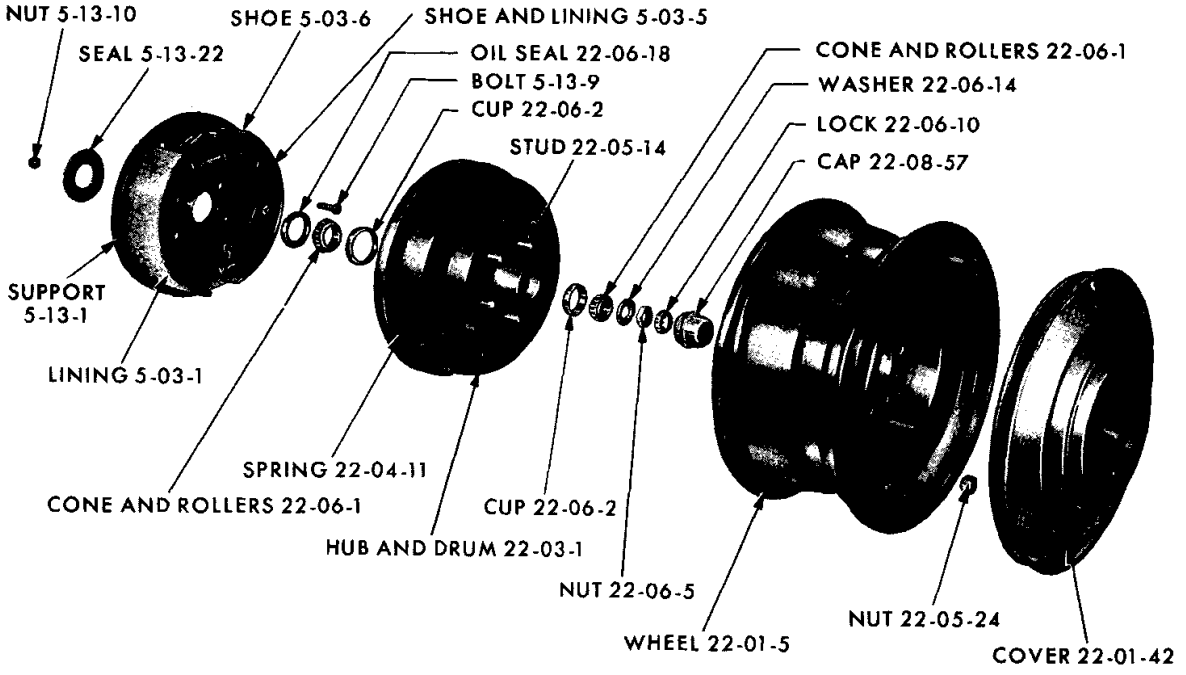

FRONT WHEEL

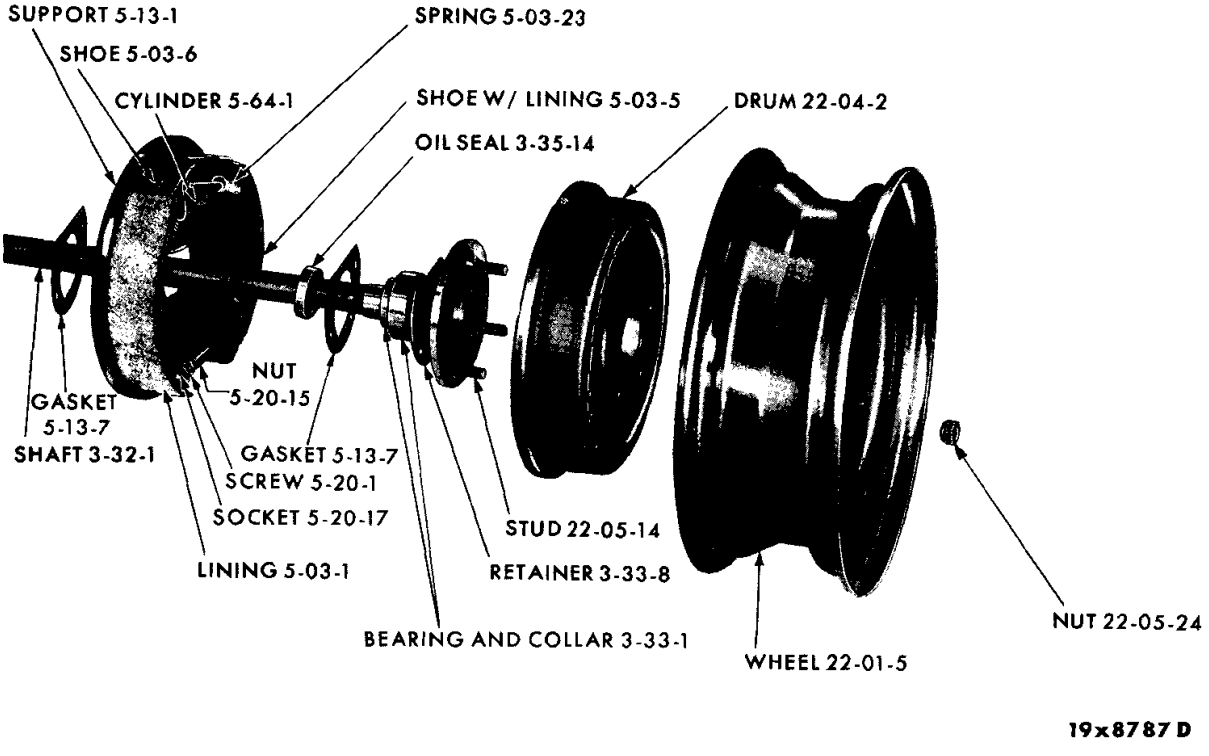

REAR WHEEL

MyMopar.com

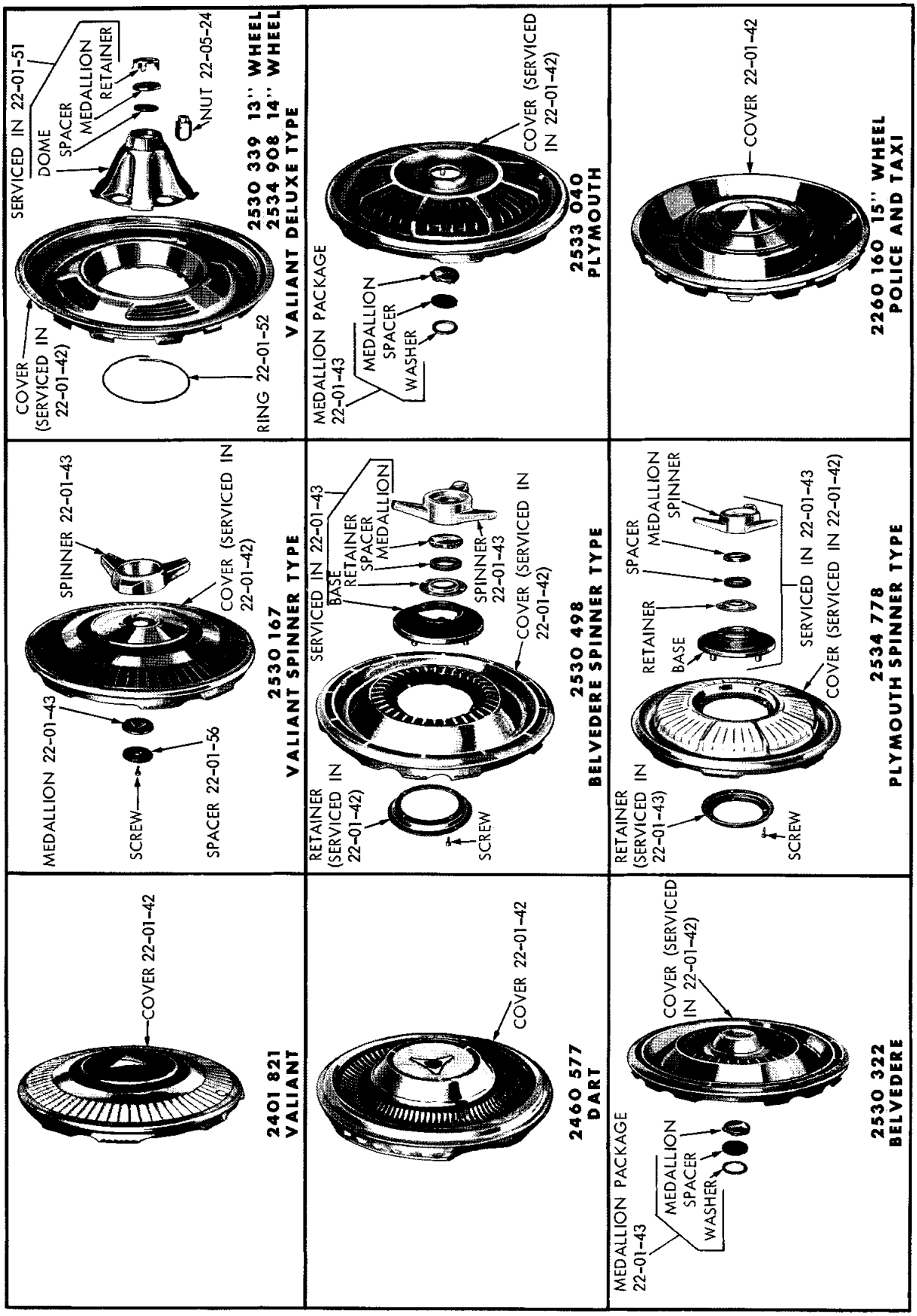

WHEEL COVERS

MyMopar.com

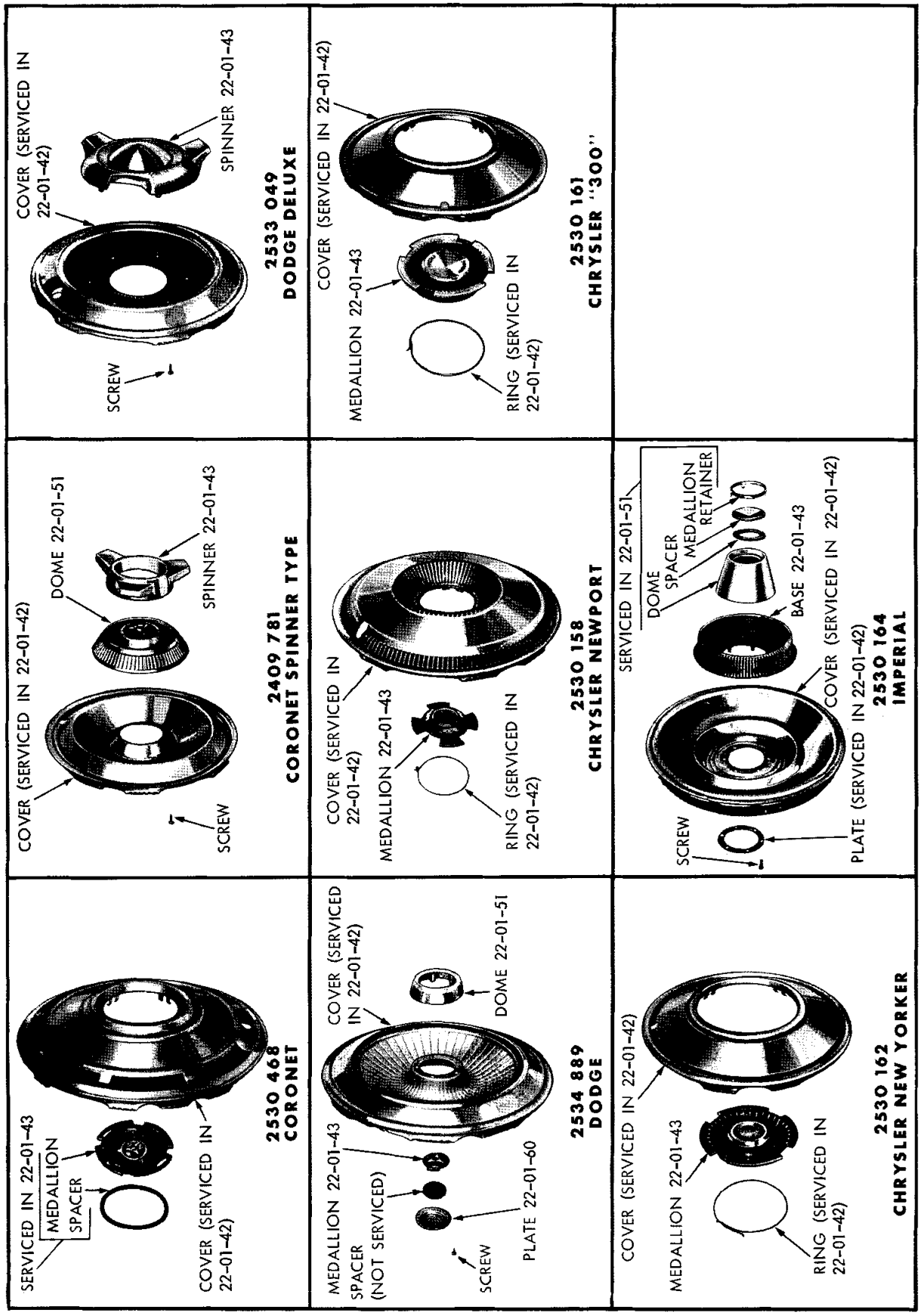

19a0300 A

WHEEL COVERS

MyMopar.com

NOTES

MyMopar.com

CODE	PART NAME AND DESCRIPTION	CYL	PER CAR	VALIANT / DART	PLYMOUTH BELVEDERE / DODGE CORONET	PLYMOUTH FURY / DODGE POLARA / CHRYSLER	IMPERIAL

TIRE CHART

22-01-0 WHEELS

Wheel Size	Tire Size
13 x 4.50	6.50 x 13 - 7.00 x 13
14 x 4.50	6.95 x 14
14 x 5.00	6.50 x 14 - 7.00 x 14 - 7.35 x 14 7.50 x 14 - 7.75 x 14
14 x 5.50	6.95 x 14 - 7.00 x 14 - 7.50 x 14 - 7.75 x 14 8.00 x 14 - 8.25 x 14
14 x 6.00	8.00 x 14 - 8.25 x 14 - 8.50 x 14 - 8.55 x 14
14 x 6.50	9.00 x 14
15 x 5.50	6.70 x 15
15 x 6.00	7.60 x 15
15 x 6.00	7.35 x 15 - 7.60 x 15 - 8.00 x 15 - 8.20 x 15 8.45 x 15 - 8.85 x 15 - 9.15 x 15

CODE	PART NAME AND DESCRIPTION	CYL	PER CAR	VALIANT / DART	PLYMOUTH BELVEDERE / DODGE CORONET	PLYMOUTH FURY / DODGE POLARA / CHRYSLER	IMPERIAL
22-01-5	WHEEL, 13 x 4.50		5	2534 167			
	14 x 4.50		5	*2660 308			
	14 x 5.50, Barracuda		5	*2660 312			
	14 x 5.00, except Sta. Wgn.		5	---- ---	2298 522		
	14 x 5.50		5	---- ---	2298 523		
	14 x 5.50, P, D, C1, except Sta. Wgn., C2-M		5	---- ---	---- ---	2298 523	
	14 x 5.00, P, except Sta. Wgn.		5	---- ---	---- ---	2525 075	
	14 x 6.00		5	---- ---	---- ---	2448 377	
	14 x 6.50, D, C1, Sta. Wgn., C3		5	---- ---	---- ---	2530 156	
	15 x 5.50		5	---- ---	2409 855		
	15 x 5.50, Police and Taxi		5	---- ---	2409 855		
	15 x 6.00, P, D2, Police and Taxi		5	---- ---	---- ---	2200 928	
	15 x 6.00		5	---- ---	---- ---	---- ---	1948 155
22-01-42	COVER, Wheel, V, 13" Wheel		4	2401 821			
	V1-H, V1-P, V2-H, V2-P, Spinner Type, 13" Wheel		4	2530 167			
	V1-H, V1-P, V2-H, V2-P, De Luxe, Chrome Nut Type, 13" Wheel		4	2530 339			
	V1-H, V1-P, V2-H, V2-P, Deluxe, Chrome Nut Type, 14" Wheel		4	2534 908			
	L		4	2460 577			
	V1, V2, R1, R2-L, R2-H		4	2530 322	2530 322		
	R2, Spinner Type	8	4	---- ---	2530 498		
	L1, L2, W1, W2-L, W2-H		4	2530 468	2530 468		
	W2-P, Spinner Type	8	4	---- ---	2409 781		
	P1, P2		4	---- ---	---- ---	2533 040	
	P2-P, Spinner Type, w/14 x 5.00 and 14 x 5.50 Wheels		4	---- ---	---- ---	2534 778	
	P2-P, Spinner Type, w/14 x 6.00 Wheels, w/o Rear Fender Skirts		4	---- ---	---- ---	2534 778	
	D2		4	---- ---	---- ---	2534 889	
	D2, De Luxe		4	---- ---	---- ---	2533 049	
	P1-L, P2-L, D2-L, 15" Wheel, Police and Taxi		4	---- ---	---- ---	2260 160	
	C1		4	---- ---	---- ---	2530 158	
	C2		4	---- ---	---- ---	2530 161	
	C3		4	---- ---	---- ---	2530 162	
			4	---- ---	---- ---	---- ---	2530 164
22-01-43	SPINNER, Cover, V1-H, V1P, V2-H, V2-P		4	2409 841			
	MEDALLION, Cover, V1-H, V1-P, V2-H, V2-P		4	2530 170			
	SPINNER, Cover, W2-P		4	---- ---	2409 784		
	SPINNER, Cover, w/BASE, MEDALLION, SPACER and RETAINER, R2-P, P2-P		4	---- ---	*2533 042	*2533 042	

TYPE LETTERS Indicate: V - Valiant, L - Dart, R - Belvedere, W - Coronet, P - Plymouth, D - Dodge, C - Chrysler, Y - Imperial

★Indicates use as required. Numerals in parentheses ( ) refer to notes. Printed in U.S.A.

⊖Indicates parts not listed in any previous parts book. Prices and specifications subject to change without notice.

* Indicates change or addition.

MyMopar.com

CODE	PART NAME AND DESCRIPTION	CYL	PER CAR	VALIANT / DART	PLYMOUTH BELVEDERE / DODGE CORONET	PLYMOUTH FURY / DODGE POLARA / CHRYSLER	IMPERIAL
22-01-0 WHEELS - Cont'd							
22-01-43	SPINNER, Cover, D2		4	---- ---	---- ---	2533 048	
	MEDALLION, Cover, C1		4	---- ---	---- ---	2530 160	
	SPINNER, Cover, w/BASE, R2-P, P2-P		4	---- ---	2533 042	2533 042	
	MEDALLION, Cover, C2		4	---- ---	---- ---	2460 589	
	MEDALLION, Cover, C3		4	---- ---	---- ---	2460 649	
	MEDALLION PACKAGE, Cover, w/SPACER and WASHER, R1, R2-L, R2-H, P		4	*2525 468	*2525 468	*2525 468	
	MEDALLION PACKAGE, Cover, w/SPACER, L, W1, W2-L, W2-H		4	2525 445	2525 445		
	MEDALLION, Cover, D2		4	---- ---	---- ---	2533 044	
	BASE, Dome		4	---- ---	---- ---	---- ---	⊟2530 165
22-01-46	EXTENSION PACKAGE, Valve Stem, 1" lgh., R1, R2, P1, P2, D2, C2, C3		1	---- ---	2530 154	2530 154	2530 154
	1 1/2" lgh., L, W1, W2-L, W2-H, C1		1	*2530 155	*2530 155	*2530 155	
	3/4" lgh., V, R, W2-P, P, D, C2, C3, Y		1	*2401 840	*2401 840	*2401 840	*2401 840
	1/2" lgh., V1-H, V1-P, V2-H, V2-P, L		1	*2660 315	*2660 315		
22-01-47	SCREW, Spinner Mounting, D2		★	6025 175	---- ---	6025 175	
	Spinner to Base Mounting, R2-P, P2-P		12	---- ---	6025 448	6025 448	
	Cover to Spinner Mounting R2-P, P2-P		16	---- ---	6024 989	6024 989	
	Dome and Spinner Mounting, W2-P		24	---- ---	6024 989		
	Dome and Base Mounting		★	---- ---	---- ---	---- ---	6025 270
22-01-49	RING, Cover Medallion Retaining, C2-M, C2-P, C3		4	---- ---	---- ---	*2530 163	
22-01-51	DOME, Wheel Cover, w/MEDALLION, V1-H, V1-P, V2-H, V2-P		4	2530 344			
	w/MEDALLION, W2-P		4	---- ---	2409 783		
	w/MEDALLION, D2		4	---- ---	---- ---	2534 891	
	w/MEDALLION and SPACER		4	---- ---	---- ---	---- ---	2530 171
22-01-52	RING, Cover Dome Retaining, w/Deluxe Type Cover, V		4	2530 345			
22-01-56	SPACER, Medallion w/Spinner Type Cover		4	2530 169			
22-01-60	PLATE, Cover Medallion Support, D2		4	---- ---	---- ---	2534 892	

22-03-0 HUB AND BRAKE DRUM

NOTE: Brake size 9" x 2 1/2"
First number refers to diameter of drum.
Second number refers to width of brake lining.

22-03-1	HUB and BRAKE DRUM, Front, 9" x 2 1/2" Brakes, Cal. and St. Louis Blt., Steel Encased, Right	6	1	2267 080			
	Left	6	1	2267 081			
	Front, 9" x 2 1/2" Brakes, Detroit Blt., Steel Encased, Right	6	1	2267 080			
	Left	6	1	2267 081			
	Front, 9" x 2 1/2" Brakes, Detroit Blt., Cast Iron w/Steel Back, Right	6	1	2260 534			
	Left	6	1	2260 535			
	Front, 10" x 2 1/4" Brakes, Right		1	2534 750			
	Left		1	2534 751			
	Front, 10" x 2 1/2" Brakes, Right		1	---- ---	2405 828		
	Left		1	---- ---	2405 829		

TYPE LETTERS Indicate: V - Valiant, L - Dart, R - Belvedere, W - Coronet, P - Plymouth, D - Dodge, C - Chrysler, Y - Imperial

★Indicates use as required. Numerals in parentheses ( ) refer to notes. Printed in U.S.A.
⊟Indicates parts not listed in any previous parts book. Prices and specifications subject to change without notice.
March 1966 Supersedes May 1965. * Indicates change or addition.

MyMopar.com

CODE	PART NAME AND DESCRIPTION	CYL	PER CAR	VALIANT / DART	PLYMOUTH BELVEDERE / DODGE CORONET	PLYMOUTH FURY / DODGE POLARA / CHRYSLER	IMPERIAL
22-03-0	**HUB AND BRAKE DRUM - Cont'd**						
22-03-1	HUB AND BRAKE DRUM - Cont'd						
	Front, 11" x 3" Brakes, Police and Taxi, Right		1	---- ---	2266 390		
	Left		1	---- ---	2266 391		
	Front, 11" x 3" Brakes, w/383 and 426 cu. in. Engine, Right	8	1	---- ---	2266 390		
	Left	8	1	---- ---	2266 391		
	Front, 11" x 2 3/4" Brakes, D2, C1, except Sta. Wgn., P, Detroit and Newark Blt., Cast Iron, Right		1	---- ---	---- ---	2530 314	
	Left		1	---- ---	---- ---	2530 315	
	Front, 11" x 2 3/4" Brakes, D2, C1, except Sta. Wgn., P, Detroit Blt., Vendor No. L-35871, Rt.		1	---- ---	---- ---	⊟2781 570	
	Lt.		1	---- ---	---- ---	⊟2781 571	
	Front, 11" x 2 3/4" Brakes, D2, C1, except Sta. Wgn., Detroit and Newark Blt., Cast Iron w/Steel Back, Right	8	1	---- ---	---- ---	2533 856	
	Left	8	1	---- ---	---- ---	2533 857	
	Front, 11" x 2 3/4" Brakes, P, Newark Blt., Cast Iron w/Steel Back, Right		1	---- ---	---- ---	2533 856	
	Left		1	---- ---	---- ---	2533 857	
	Front, 11" x 3" Brakes, D2, C1, Sta. Wgn., C2, C3, Right	8	1	---- ---	---- ---	2266 896	
	Left	8	1	---- ---	---- ---	2266 897	
	Front, 11" x 3" Brakes, P, D2, Police and Taxi, Right		1	---- ---	---- ---	2530 126	
	Left		1	---- ---	---- ---	2530 127	
	Front, 11" x 3" Brakes, P2, D2, w/426 cu. in. Engine, Right		1	---- ---	---- ---	2530 126	
	Left		1	---- ---	---- ---	2530 127	
	Front, 11" x 3" Brakes, Right		1	---- ---	---- ---	---- ---	2530 130
	Left		1	---- ---	---- ---	---- ---	2530 131
	HUB and BRAKE DISC, Front, Right		1	2660 296			
	Left		1	2660 297			
	Front, P2, D2, Police, Right		1	---- ---	---- ---	2534 144	
	Left		1	---- ---	---- ---	2534 145	
22-04-0	**BRAKE DRUM**						
22-04-2	DRUM, Rear, Steel Encased, 9" x 2" Brakes	6	2	2267 083			
	Rear, 10" x 1 3/4" Brakes		2	2534 757			
	Rear, 10" x 2 1/2" Brakes		2	---- ---	2460 637		
	Rear, 11" x 2 1/2" Brakes, Police and Taxi		2	---- ---	2405 798		
	Rear, 11" x 2 1/2" Brakes, D2, P2, C1, C2, C3 except Sta. Wgn.		2	---- ---	---- ---	2533 824	
	Rear, 11" x 2" Brakes, D2, C1, except Sta. Wgn., P		2	---- ---	---- ---	*2405 721	
	Rear, 11" x 2" Brakes, P2, D2, C1, except Sta. Wgn., P1		2	---- ---	---- ---	*2530 308	
	Rear, 11" x 3" Brakes, P, Police and Taxi, D2 Police, except Disc Brakes		2	---- ---	---- ---	2405 758	
	Rear, 11" x 3" Brakes, C	8	2	---- ---	---- ---	2405 758	
	Rear, 11" x 3" Brakes		2	---- ---	---- ---	---- ---	2405 760
22-04-11	SPRING, Front Wheel Brake Drum Dampener, w/9" Brakes	6	2	2266 298			
	w/10" Brakes		2	*1142 316			
	11" x 3" Brakes, Front, w/383 and 426 cu. in. Engine	8	2	---- ---	2266 877		
	11" x 3" Brakes, Front, Police and Taxi		2	---- ---	2266 877		

TYPE LETTERS Indicate: V - Valiant, L - Dart, R - Belvedere, W - Coronet, P - Plymouth, D - Dodge, C - Chrysler, Y - Imperial

★Indicates use as required. Numerals in parentheses ( ) refer to notes. Printed in U.S.A.

⊟Indicates parts not listed in any previous parts book. Prices and specifications subject to change without notice.

• Indicates change or addition.

MyMopar.com

CODE	PART NAME AND DESCRIPTION	CYL	PER CAR	VALIANT / DART	PLYMOUTH BELVEDERE / DODGE CORONET	PLYMOUTH FURY / DODGE POLARA / CHRYSLER	IMPERIAL
22-04-0	**BRAKE DRUM - Cont'd**						
22-04-11	SPRING - Cont'd						
	Front		2	---- ---	---- ---	2266 877	
	10" x 2 1/2" Brakes		2	---- ---	*1142 316		
	11" x 2 1/2" Brakes, Rear, Police and Taxi		2	---- ---	2266 877		
	11" x 2 1/2" Brakes, Rear, P2, D2, Police, w/Disc Brakes on Front		2	---- ---	---- ---	1142 259	
	11" x 2 1/2" Brakes, Rear, C3 except Sta. Wgn., D2, C1, C2		2	---- ---	---- ---	*1142 259	
	11" x 2" Brakes, Rear, D2, C1, except Sta. Wgn., P		2	---- ---	---- ---	2266 877	
	11" x 3" Brakes, Rear, P, Police and Taxi, D2 Police, except w/Disc Brakes on Front		2	---- ---	---- ---	2266 877	
			4	---- ---	---- ---	---- ---	2266 877
22-04-14	RETAINER, Rear Drum to Axle Shaft		6	2072 676	*2201 842	*2201 842	*2460 656
22-05-0	**WHEEL DRIVING STUD AND NUT**						
22-05-14	STUD, Front Wheel, Detroit Blt., Cast Iron w/Steel Back Drum, w/9" Brakes, Right	6	5	2409 808			
	Left	6	5	2409 809			
	Front Wheel, Cal., Detroit and St. Louis Blt., Steel Encased Drum, w/9" Brakes, Right	6	5	2072 750			
	Left	6	5	*2072 751			
	Front Wheel, w/10" Brakes, Right		5	2534 754			
	Left		5	2534 755			
	Rear Wheel, Right		5	2070 158			
	Left		5	2070 159			
	Front, Right, w/Disc Brakes		5	2768 028			
	Left		5	2768 029			
	Front Wheel, w/10" x 2 1/2" Brakes, Right		5	---- ---	2405 144		
	Left		5	---- ---	2405 145		
	Front Wheel, w/11" x 3" Brakes, Police and Taxi, Right		5	---- ---	2405 144		
	Left		5	---- ---	2405 145		
	Front Wheel, w/11" x 3" Brakes, w/383 and 426 cu. in. Engine, Right	8	5	---- ---	2405 144		
	Left	8	5	---- ---	2405 145		
	Front Wheel, w/11" x 3" Brakes, P2, D2, C1 Sta. Wgn., C2, C3, Right		5	---- ---	---- ---	2405 144	
	Left		5	---- ---	---- ---	2405 145	
	Front Wheel, w/11" x 2 3/4" Brakes, D2, C1, except Sta. Wgn., P, Detroit and Newark Blt., Cast Iron Drum, Right		5	---- ---	---- ---	2460 614	
	Left		5	---- ---	---- ---	2460 615	
	Front Wheel, w/11" x 2 3/4" Brakes, D2, C1, except Sta. Wgn., Detroit and Newark Blt., Cast Iron w/Steel Back Drum, Right	8	5	---- ---	---- ---	2534 776	
	Left	8	5	---- ---	---- ---	2534 777	
	Front Wheel, w/11" x 2 3/4" Brakes, P, Newark Blt., Cast Iron w/Steel Back Drum, Right		5	---- ---	---- ---	2534 776	
	Left		5	---- ---	---- ---	2534 777	
	Front Wheel, w/11" x 3" Brakes, P, D2, Police and Taxi, Right		5	---- ---	---- ---	2405 144	
	Left		5	---- ---	---- ---	2405 145	

TYPE LETTERS Indicate: V - Valiant, L - Dart, R - Belvedere, W - Coronet, P - Plymouth, D - Dodge, C - Chrysler, Y - Imperial

★Indicates use as required. Numerals in parentheses ( ) refer to notes. Printed in U.S.A.

⊟Indicates parts not listed in any previous parts book. Prices and specifications subject to change without notice.

March 1966 Supersedes May 1965. * Indicates change or addition.

MyMopar.com

CODE	PART NAME AND DESCRIPTION	CYL	PER CAR	VALIANT / DART	PLYMOUTH BELVEDERE / DODGE CORONET	PLYMOUTH FURY / DODGE POLARA / CHRYSLER	IMPERIAL
22-05-0	**WHEEL DRIVING STUD AND NUT - Cont'd**						
22-05-14	STUD - Cont'd						
	Front Wheel, w/11" x 3" Brakes, P2, D2, w/426 cu. in. Engine, Right	8	5	---- ---	---- ---	2405 144	
	Left	8	5	---- ---	---- ---	2405 145	
	Front Hub, Right		5	---- ---	---- ---	---- ---	2460 662
	Left		5	---- ---	---- ---	---- ---	2460 663
	Rear Wheel, Right		5	---- ---	2404 435	2404 435	
	Left		5	---- ---	2404 436	2404 436	
	Rear Wheel, Right		5	---- ---	---- ---	---- ---	2404 199
	Left		5	---- ---	---- ---	---- ---	2404 200
22-05-24	NUT, Front and Rear Wheel Mounting, Right, Plain		10	2409 824			
	Left		10	2409 825			
	Front and Rear, Right, Chrome, Short, 1 5/16" lgh., w/13" Wheels		10	*2530 346			
	Left		10	2530 347			
	Front and Rear, Right, Chrome, Long, 2 3/16" lgh., w/14" Wheels		1	*2534 906			
	Left		1	*2534 907			
	Front and Rear, Right		10	---- ---	2409 826	2409 826	
	Left		10	---- ---	2409 827	2409 827	
	Front and Rear, Right		10	---- ---	---- ---	---- ---	2409 828
	Left		10	---- ---	---- ---	---- ---	2409 829
22-06-0	**FRONT WHEEL BEARING**						
22-06-1	CONE and ROLLER, Inner, w/9" Brakes	6	2	2203 352			
	Outer, w/9" Brakes	6	2	2203 350			
	Inner, w/10" Brakes		2	1619 701			
	Outer, w/10" Brakes		2	1619 703			
	Inner		2	---- ---	1619 701	1619 701	1789 755
	Outer		2	---- ---	1619 703	1619 703	1790 241
22-06-2	CUP, Inner, w/9" Brakes	6	2	2203 353			
	Outer, w/9" Brakes	6	2	2203 351			
	Inner, w/10" Brakes		2	1619 700			
	Outer, w/10" Brakes		2	1619 702			
	Inner		2	---- ---	1619 700	1619 700	1789 754
	Outer		2	---- ---	1619 702	1619 702	1790 244
22-06-5	NUT, Bearing, w/9" Brakes	6	2	2072 731			
	w/10" Brakes		2	1732 300			
			2	---- ---	1732 300	1732 300	1732 300
22-06-10	LOCK, Nut		2	1673 324	1673 324	1673 324	1673 324
22-06-14	WASHER, Nut Thrust, w/9" Brakes	6	2	2072 733			
	w/10" Brakes		2	600 194			
			2	---- ---	600 194	600 194	600 194
22-06-18	SEAL, Hub Dust, w/9" Brakes	6	2	2525 063			
	w/10" Brakes		2	1613 409			
			2	---- ---	2266 378	2266 378	2266 839
22-08-0	**HUB CAP**						
22-08-5	CAP, V		4	2401 843			
	L1-L, L1-H, L2-L, L2-H		4	2409 523			
	R1, R2-L, R2-H, P1, P2-L, P2-M, P2-H		4	---- ---	2460 581	2460 581	
	R2-P, w/15" Wheel		4	---- ---	2460 581		
	W1, W2-L, W2-H, D2-L, D2-H		4	---- ---	2460 583	2460 583	

TYPE LETTERS Indicate: V - Valiant, L - Dart, R - Belvedere, W - Coronet, P - Plymouth, D - Dodge, C - Chrysler, Y - Imperial

★Indicates use as required. Numerals in parentheses ( ) refer to notes. Printed in U.S.A.

⊟Indicates parts not listed in any previous parts book. Prices and specifications subject to change without notice.

• Indicates change or addition. March 1966 Supersedes May 1965.

MyMopar.com

CODE	PART NAME AND DESCRIPTION	CYL	PER CAR	VALIANT / DART	PLYMOUTH BELVEDERE / DODGE CORONET	PLYMOUTH FURY / DODGE POLARA / CHRYSLER	IMPERIAL
22-08-0	**HUB CAP - Cont'd**						
22-08-5	CAP - Cont'd						
	W2-P, w/15" Wheel		4	---- ---	2460 583		
	P1, P2, D2, w/15" Wheel		4	---- ---	---- ---	1943 733	
	C1		4	---- ---	---- ---	2460 587	
22-08-57	CAP, Front Wheel Grease, w/9" Brakes	6	2	2072 718	1613 416	1613 416	1671 341
	w/10" Brakes		2	1613 416			
22-09-0	**WHEEL BALANCE WEIGHT**						
22-09-1	WEIGHT, 1/2 oz.		★	1615 349	1615 349	1615 349	1615 349
	1 oz.		★	1615 350	1615 350	1615 350	1615 350
	1 1/2 oz.		★	1615 351	1615 351	1615 351	1615 351
	2 oz.		★	1615 352	1615 352	1615 352	1615 352
	2 1/2 oz.		★	1615 353	1615 353	1615 353	1615 353
	3 oz.		★	1615 354	1615 354	1615 354	1615 354
22-20-0	**SPARE WHEEL CARRIER**						
22-20-29	BRACKET, Anchor Bolt		1	2083 190			
	2D., 2D. HT., 4D		1	---- ---	2484 181		
	Sta. Wgn.		1	---- ---	2254 644		
	Cv. Cp.		1	---- ---	2254 646		
	2D., 2D. HT., 4D., 4D. HT.		1	---- ---	---- ---	2481 380	
	Cv. Cp.		1	---- ---	---- ---	1695 319	
			1	---- ---	---- ---	---- ---	1695 319
22-20-80	PLATE, Anchor Rod		1	---- ---	---- ---	---- ---	1750 747
22-20-82	RETAINER, Bolt, Sta. Wgn.		1	---- ---	2206 925		
22-20-87	BOLT, Spare Wheel Anchor, except Sta. Wgn.		1	6023 192			
	BOLT, except Cv. Cp. and Sta. Wgn.		1	---- ---	2424 803		
	BOLT, Cv. Cp. and Sta. Wgn.		1	---- ---	2254 645		
	ROD, P, D, except Cv. Cp. and Sta. Wgn., 7 11/32" lgh.		1	---- ---	---- ---	2484 989	
	ROD, P, D, C, except Cv. Cp. and Sta. Wgn., 8 7/32" lgh.		1	---- ---	---- ---	2483 819	
	ROD, Cv. Cp.		1	---- ---	---- ---	2483 746	
	ROD, Sta. Wgn.		1	---- ---	---- ---	2573 028	
	ROD, 7 5/8" lgh.		1	---- ---	---- ---	---- ---	2483 746
	ROD, 8 3/16" lgh.		1	---- ---	---- ---	1963 236	
	ROD, D2, C1, C2, C3, except Cv. Cp. and Sta. Wgn., w/8.50 x 14 Tire		1	---- ---	---- ---	2483 819	
	PIN, Rod Clevis		1	---- ---	---- ---	9421 391	
22-20-89	NUT, Anchor Rod Wing, 3/8" - 16		1	*6023 540	*6023 540	*6023 540	*6023 540
	Spare Wheel Cover Panel Retainer Wing		1	*148 314	*148 314		

TYPE LETTERS Indicate: V - Valiant, L - Dart, R - Belvedere, W - Coronet, P - Plymouth, D - Dodge, C - Chrysler, Y - Imperial

★Indicates use as required. Numerals in parentheses ( ) refer to notes. Printed in U.S.A.

⊟Indicates parts not listed in any previous parts book. Prices and specifications subject to change without notice.

MyMopar.com

GROUP 23 - BODY

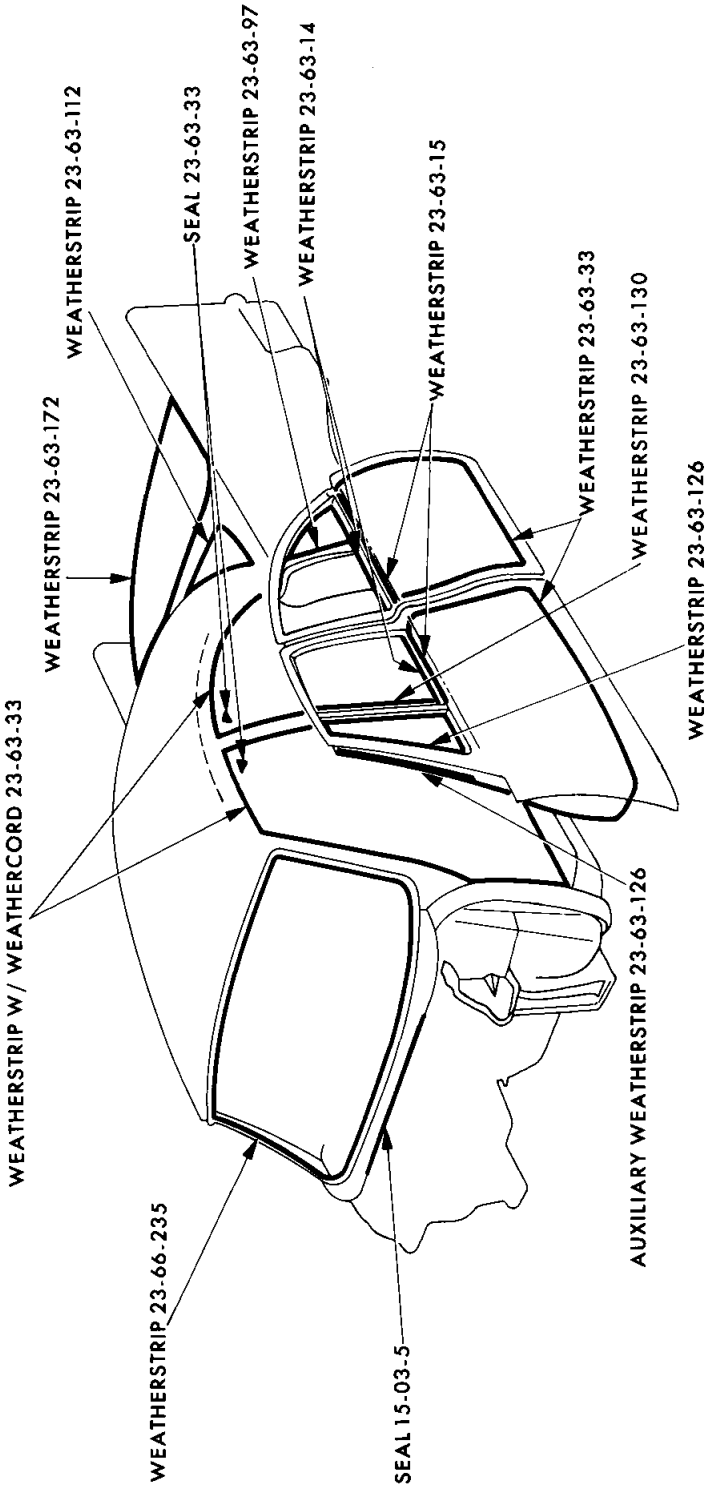

19x9836A

WEATHERSTRIPS AND SEALS - TYPICAL OF 2 DOOR AND 4 DOOR SEDANS

MyMopar.com

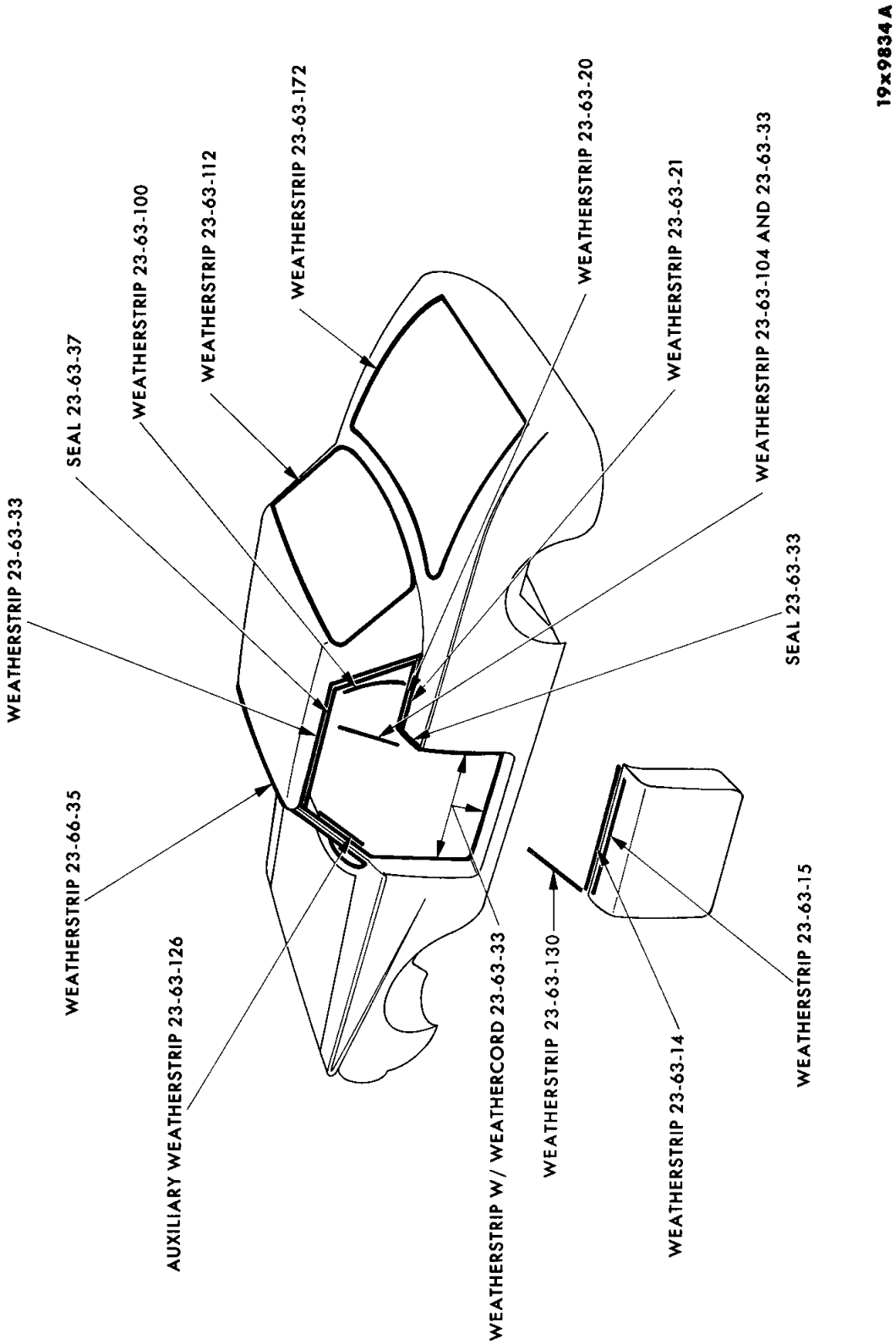

WEATHERSTRIPS AND SEALS - TYPICAL OF 2 DOOR HARDTOPS

MyMopar.com

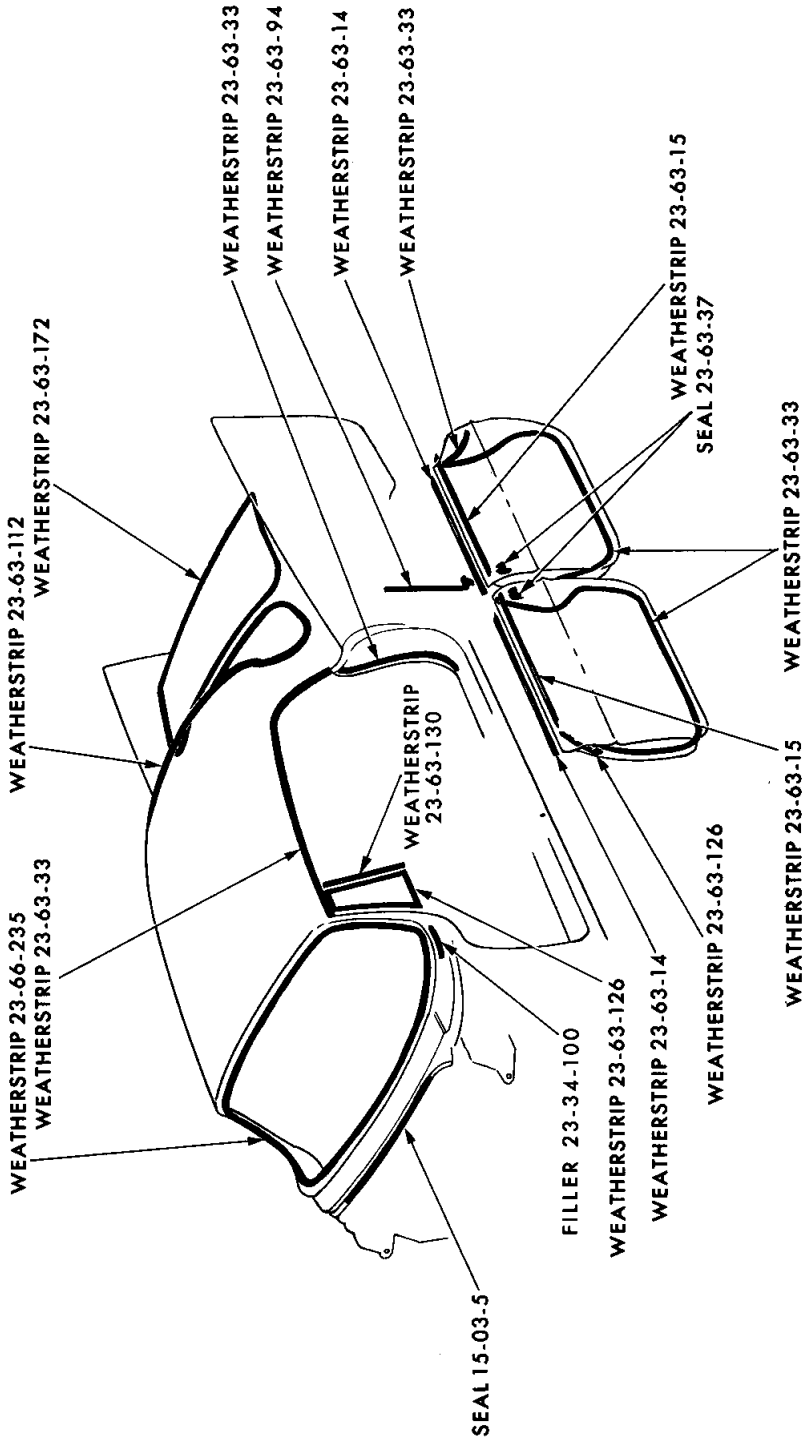

19x9835 B

WEATHERSTRIPS AND SEALS - TYPICAL OF 4 DOOR HARDTOPS

MyMopar.com

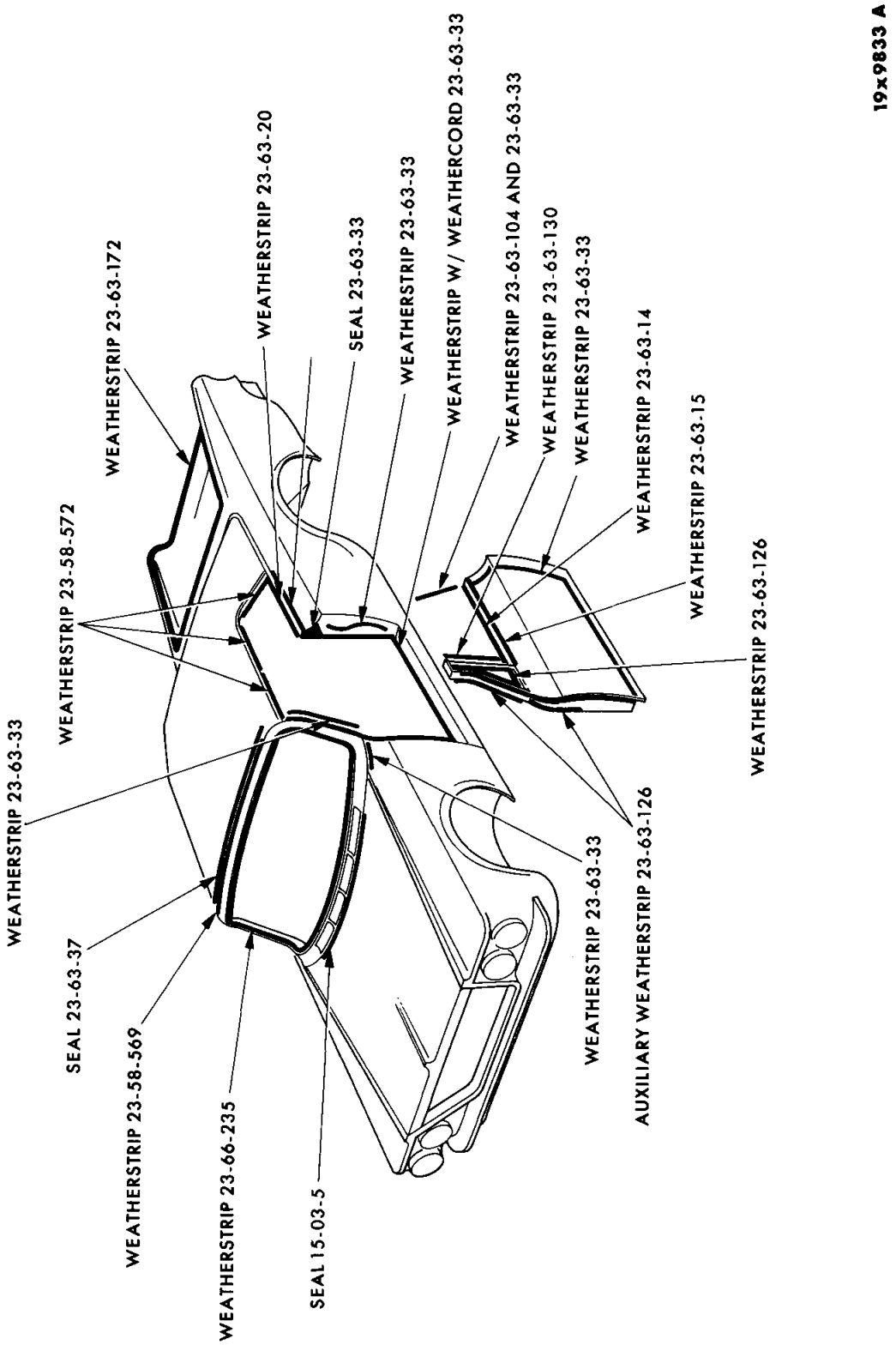

19x9833 A

WEATHERSTRIPS AND SEALS - TYPICAL OF CONVERTIBLE COUPES

MyMopar.com

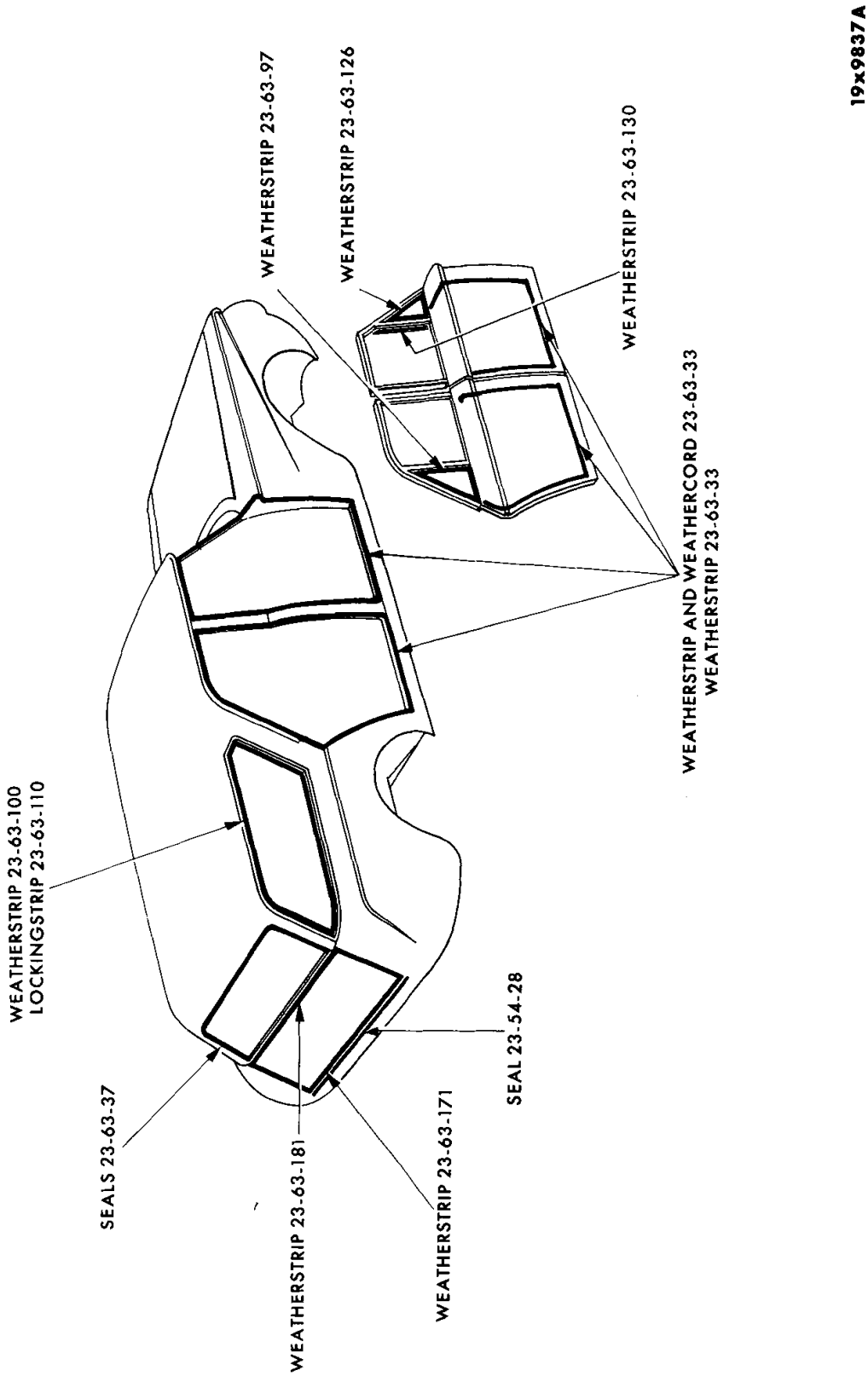

WEATHERSTRIPS AND SEALS - TYPICAL OF STATION WAGONS

MyMopar.com

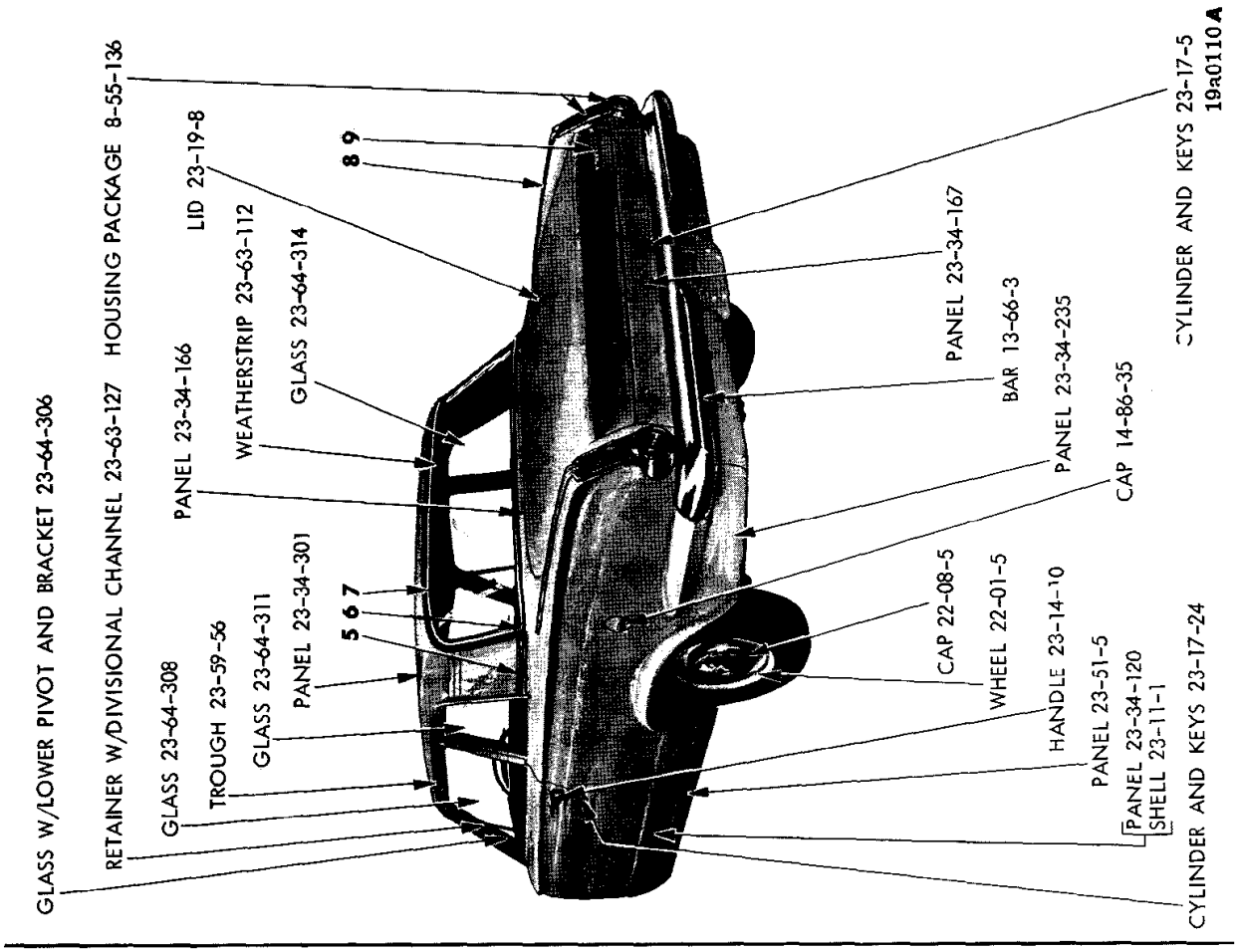

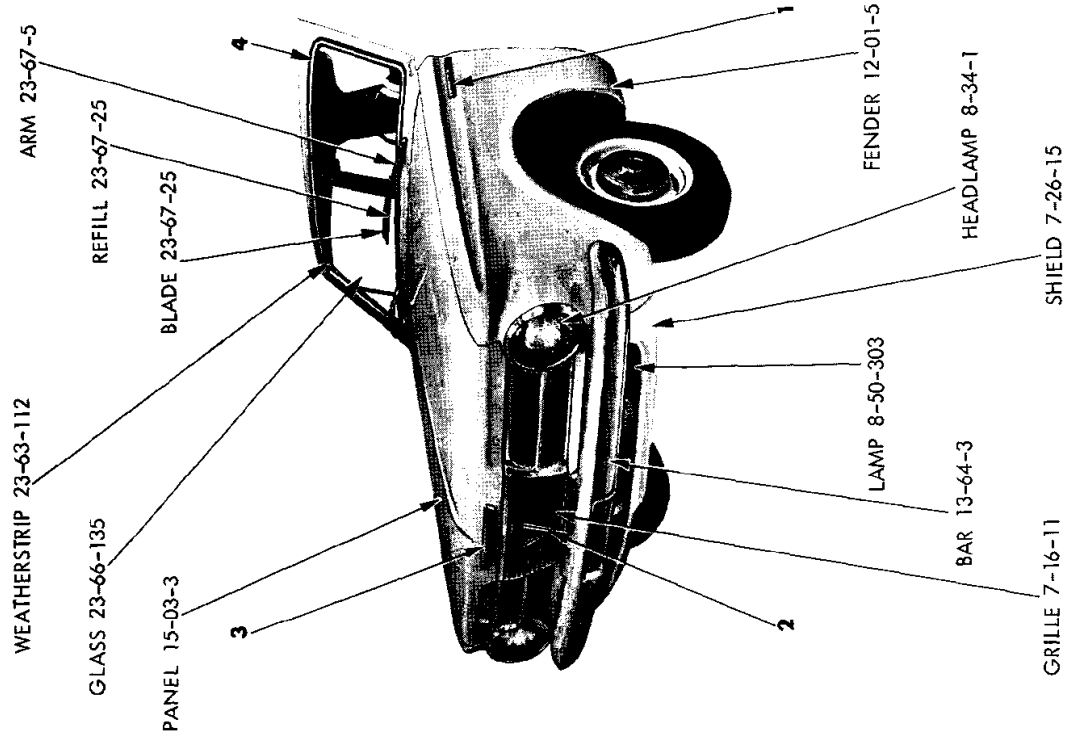

EXTERIOR VIEW - VALIANT V-L 2 DOOR SEDAN

MyMopar.com

REF. NO.	QTY	PART NUMBER	DESCRIPTION
1	2	2449 708	NAME PLATE, Fender Side (12-15-21)
	2	6000 050	Clip
	4	6024 870	Nut
2	1	2449 700	MEDALLION, Radiator Grille (7-17-1)
	3	6013 114	Nut
3	1	2583 215	NAME PLATE, Hood Front (15-06-3)
	2	274 754	Nut
4	1	2082 278	LOCKINGSTRIP, Windshield Glass Weatherstrip (23-66-239)
5	2	2584 496-7	MOULDING PACKAGE, Roof Side Extension (23-23-42)
	6	9411 618	Nut
	6	6024 711	Washer
6	2	2424 350	CAP, Rear Window Glass Weatherstrip Lockingstrip (23-63-117)
7	2	2424 426	LOCKINGSTRIP, Rear Window Glass Weatherstrip (23-63-114)
8	2	2525 959	MOULDING PACKAGE, Quarter Panel Peak (23-23-39)
	8	6001 647	Retainer
	8	116 000	Nut
9	1	2526 266	NAME PLATE, Deck Lid (23-19-114)
	2	---- ---	Washer
	2	---- ---	Nut

All Packages Include Attaching Parts

Part Type Code is Indicated in Parentheses

EXTERIOR VIEW - VALIANT V-L 2 DOOR SEDAN

MyMopar.com

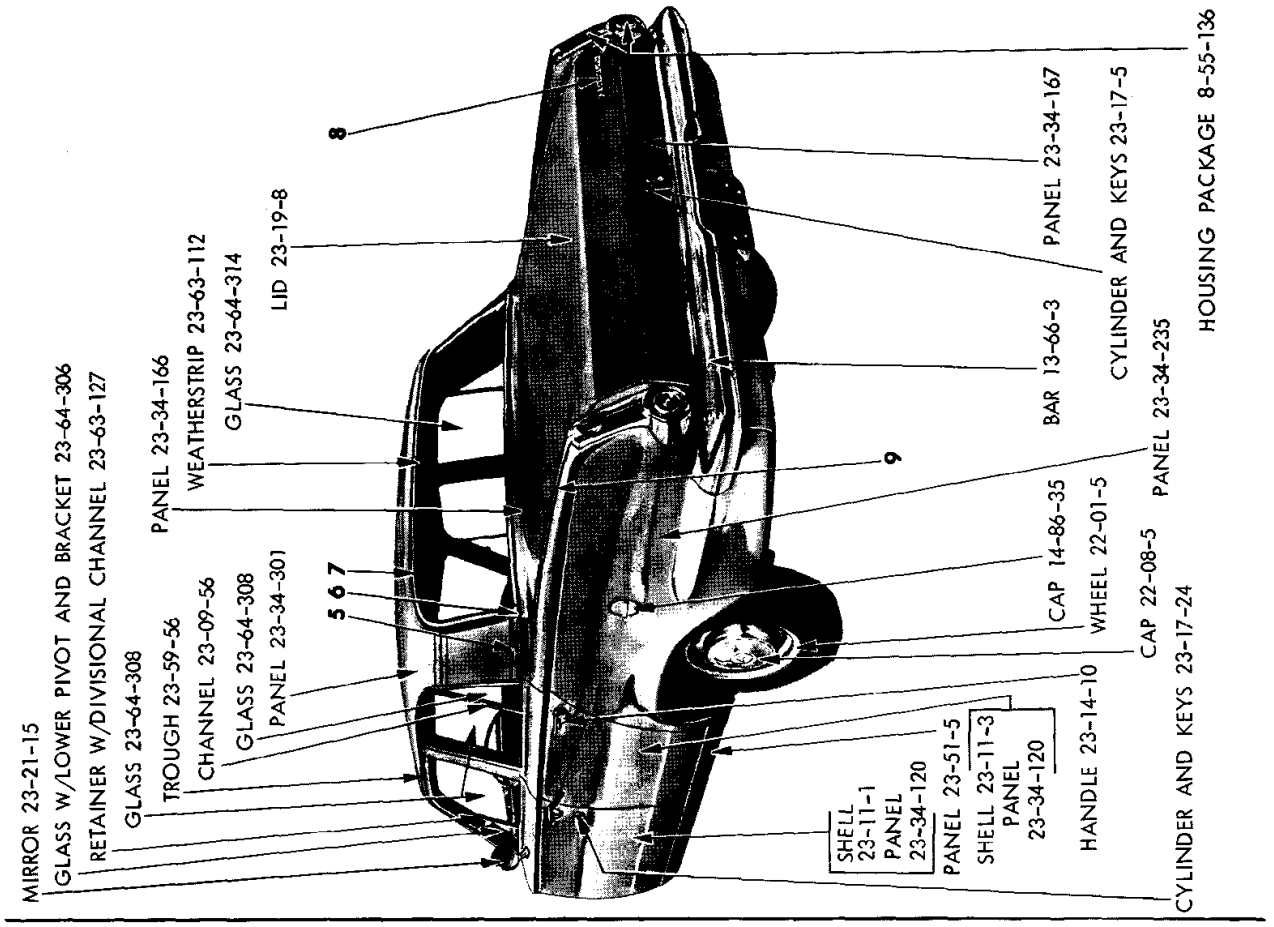

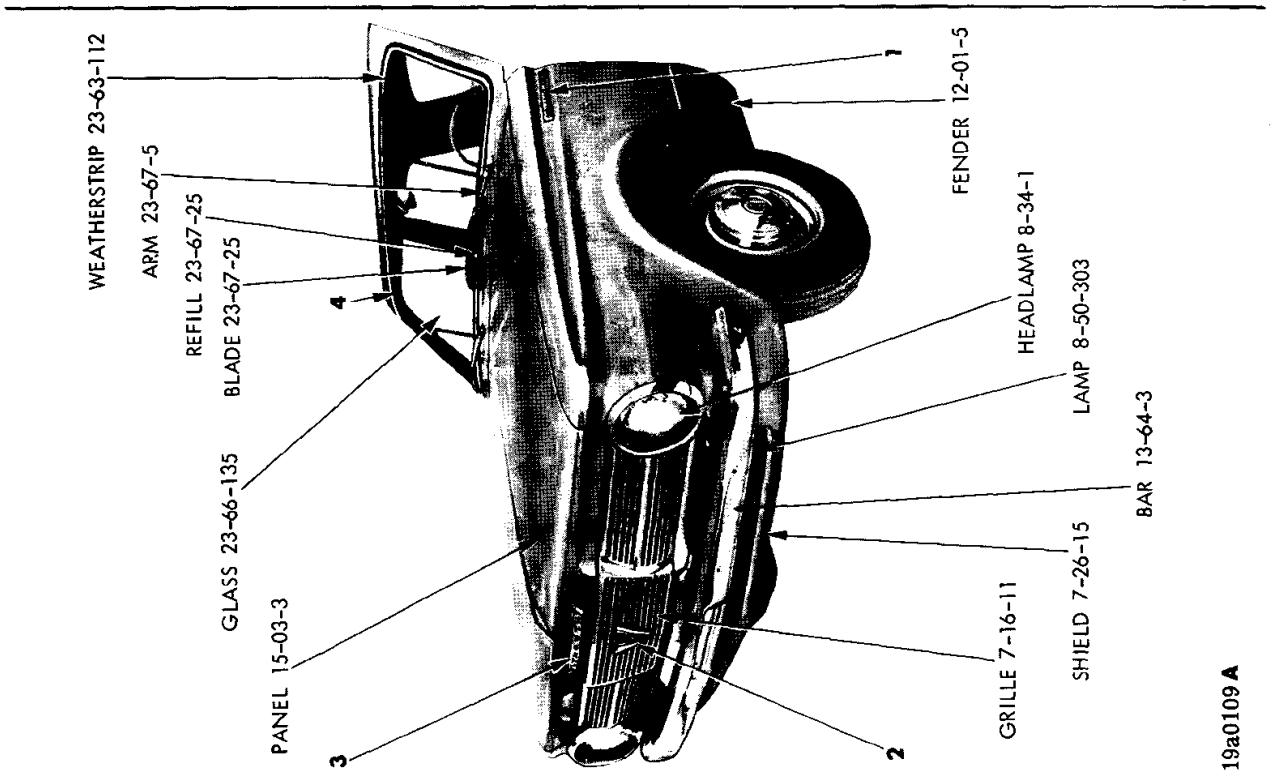

EXTERIOR VIEW - VALIANT V-L 4 DOOR SEDAN

MyMopar.com

REF. NO.	QTY	PART NUMBER	DESCRIPTION
1	2	2449 708	NAME PLATE, Fender Side (12-15-21)
	2	6000 050	Clip
	4	6024 870	Nut
2	1	2449 700	MEDALLION, Radiator Grille (7-17-1)
	3	6013 114	Nut
3	1	2583 215	NAME PLATE, Hood Front (15-06-3)
	2	274 754	Nut
4	1	2082 278	LOCKINGSTRIP, Windshield Glass Weatherstrip (23-66-239)
5	1	2584 496-7	MOULDING PACKAGE, Roof Side Extension (23-23-42)
6	2	2424 350	CAP, Rear Window Glass Weatherstrip Lockingstrip (23-63-117)
7	2	2424 426	LOCKINGSTRIP, Rear Window Glass Weatherstrip (23-63-114)
8	1	2526 266	NAME PLATE, Deck Lid (23-19-114)
	2	---- ---	Washer
	2	---- ---	Nut
9	2	2525 959	MOULDING PACKAGE, Quarter Panel Peak (23-23-39)
	8	6001 647	Retainer
	8	116 000	Nut

All Packages Include Attaching Parts

Part Type Code is Indicated in Parentheses

EXTERIOR VIEW - VALIANT V-L 4 DOOR SEDAN

MyMopar.com

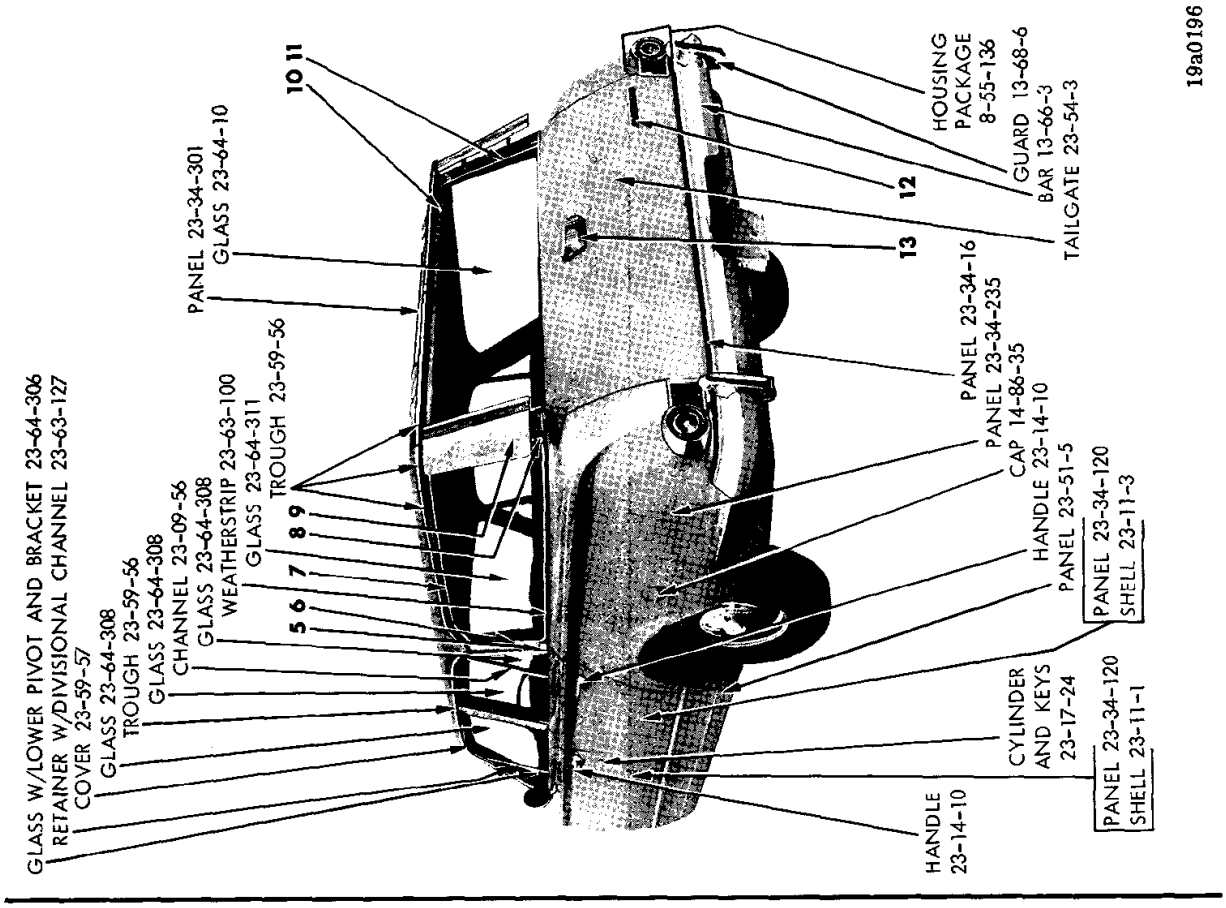

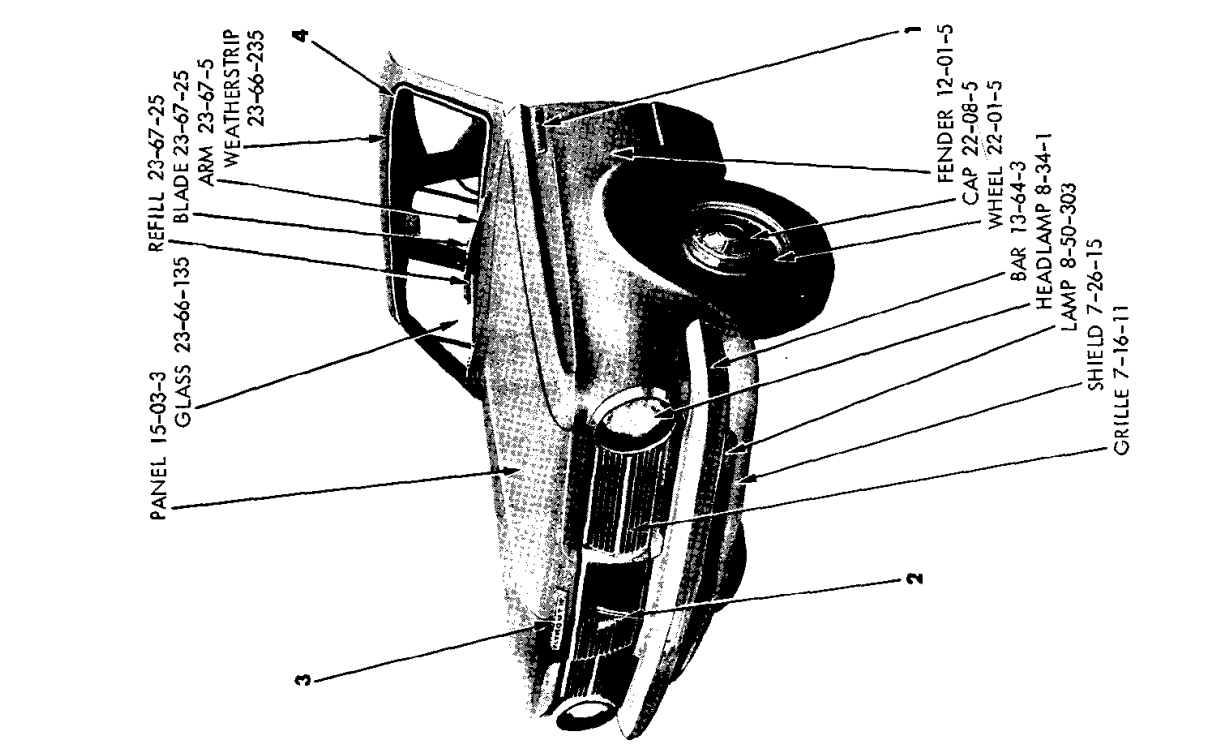

EXTERIOR VIEW - VALIANT V-L STATION WAGON

MyMopar.com

REF. NO.	QTY	PART NUMBER	DESCRIPTION
1	2	2449 708	NAME PLATE, Fender Side, Valiant (12-15-21)
	2	6000 050	Clip 4 6024 870 Nut
2	1	2449 700	MEDALLION, Radiator Grille (7-17-1)
	1	6013 114	Nut
3	1	2583 215	NAME PLATE, Hood Front, (Plymouth) (15-06-3)
	2	274 754	Nut
4	1	2082 278	LOCKINGSTRIP, Windshield Glass Weatherstrip (23-66-239)
5	1	2584 510-1	BASE and INSERT PACKAGE, Roof Panel Extension Moulding (23-23-51)
	2	---- ---	Washer
	2	6006 264	Nut
6	2	2424 625	CAP, Quarter Window Locking-strip Upper Front (23-63-117)
7	2	2243 513	LOCKINGSTRIP, Quarter Window Glass Weatherstrip (23-63-110)
8	2	2424 626	CAP, Quarter Window Glass Lockingstrip Lower Rear (23-63-117)
9	1	2484 444-5	DEFLECTOR, Roof Panel Outside Air
	2	6024 814	Nut
	4	6024 815	Screw
10	1	2448 401	MOULDING PACKAGE, Tailgate Opening Upper (23-23-60)
	5	6001 451	Clip
11	1	2421 577-8	MOULDING PACKAGE, Rear Upper Pillar Outside (23-23-60)
	6	6001 076	Clip
	4	6024 271	Screw
	4	6001 077	Clip
12	1	2526 266	NAME PLATE, Tailgate (23-54-11)
	2	---- ---	Nut
	2	---- ---	Washer
13	1	2299 752	ORNAMENT w/Stud, Tailgate Electric Window Regulator (23-54-11)

All Packages Include Attaching Parts

Part Type Code is Indicated in Parentheses

EXTERIOR VIEW - VALIANT V-L STATION WAGON

MyMopar.com

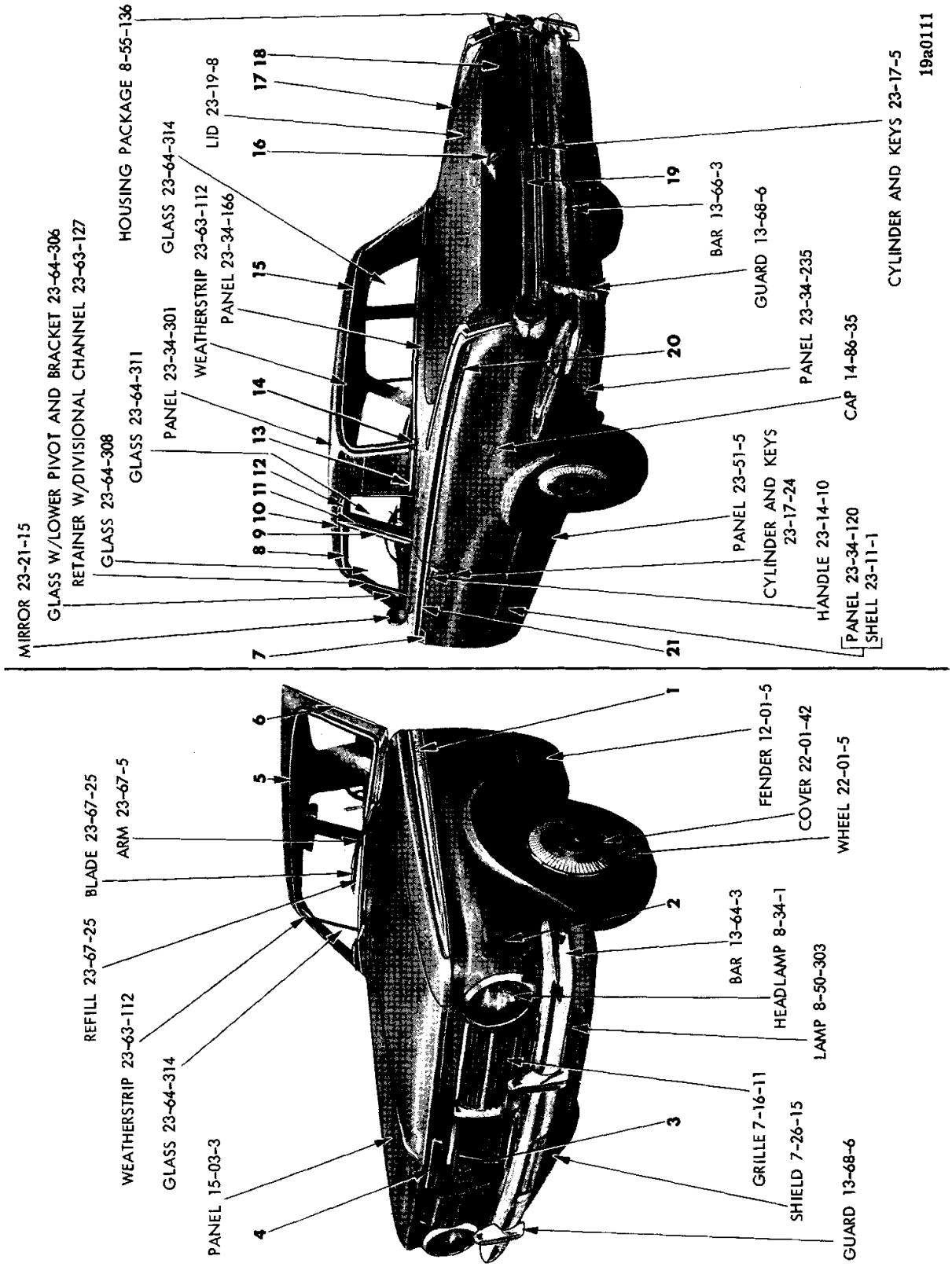

EXTERIOR VIEW - VALIANT V-H 2 DOOR SEDAN

MyMopar.com

REF. NO.	QTY	PART NUMBER	DESCRIPTION
1	1	2584 004-5	MOULDING PACKAGE, Fender Side (12-15-2)
	12	---- ---	Nut
2	2	2524 054	ORNAMENT, Fender Side, V8 (12-15-21)
	4	6023 685	Nut
3	1	2449 700	MEDALLION, Radiator Grille (7-17-1)
	3	6013 114	Nut
4	1	2583 215	NAME PLATE, Hood Front (15-06-3)
	2	274 754	Nut
5	1	2082 278	LOCKINGSTRIP, Windshield Glass Weatherstrip (23-66-239)
6	1	2484 424-5	MOULDING, Roof Side Drain Trough Front (23-59-61)
7	1	2602 446-7	MOULDING, Front Door Front, w/Retainer (23-23-32)
8	1	2216 944-5	MOULDING, Front Door Window Opening Frame Upper and Front (23-23-32)
9	1	2216 950-1	MOULDING, Front Door Window Opening Frame Rear (23-23-32)
10	1	2255 936-7	MOULDING, Roof Side Drain Trough Rear (23-59-61)
11	1	2216 950-1	MOULDING, Quarter Window Opening Frame Front (23-23-73)
12	1	2244 374-5	MOULDING, Quarter Window Opening Frame Upper (23-23-73)
13	1	2584 496-7	MOULDING PACKAGE, Roof Side Extension (23-23-42)
	6	9411 618	Nut
	6	6024 711	Washer
14	2	2424 350	CAP, Rear Window Glass Weatherstrip Lockingstrip (23-63-117)
15	2	2424 426	LOCKINGSTRIP, Rear Window Glass Weatherstrip (23-63-114)
16	1	2526 268	MEDALLION, Deck Lid (23-19-114)
	2	---- ---	Washer
	2	9411 618	Nut
	2	6000 960	Clip
17	2	2525 959	MOULDING PACKAGE, Quarter Panel Peak (23-23-39)
	8	6001 647	Retainer
	8	116 000	Nut
18	1	2526 266	NAME PLATE, Deck Lid (23-19-114)
	2	---- ---	Washer
	2	---- ---	Nut
19	1	2526 137	PANEL, Deck Lower Panel Finish (23-23-28)
	8	6001 616	Retainer, Upper
	6	6001 617	Retainer, Lower
	6	6024 894	Washer
	8	6022 052	Washer
	14	6024 679	Nut
20	1	2525 968-9	MOULDING PACKAGE, Quarter Panel Lower (23-23-39)
	8	6001 730	Retainer
	2	6024 271	Screw
	10	6024 679	Nut
	8	6001 680	Retainer
	2	6001 678	Retainer
21	1	2525 964-5	MOULDING PACKAGE, Front Door Rear (23-23-32)
	10	6001 730	Retainer
	2	6001 672	Retainer
	2	9417 621	Nut

All Packages Include Attaching Parts

Part Type Code is Indicated in Parentheses

EXTERIOR VIEW - VALIANT V-H 2 DOOR SEDAN

MyMopar.com

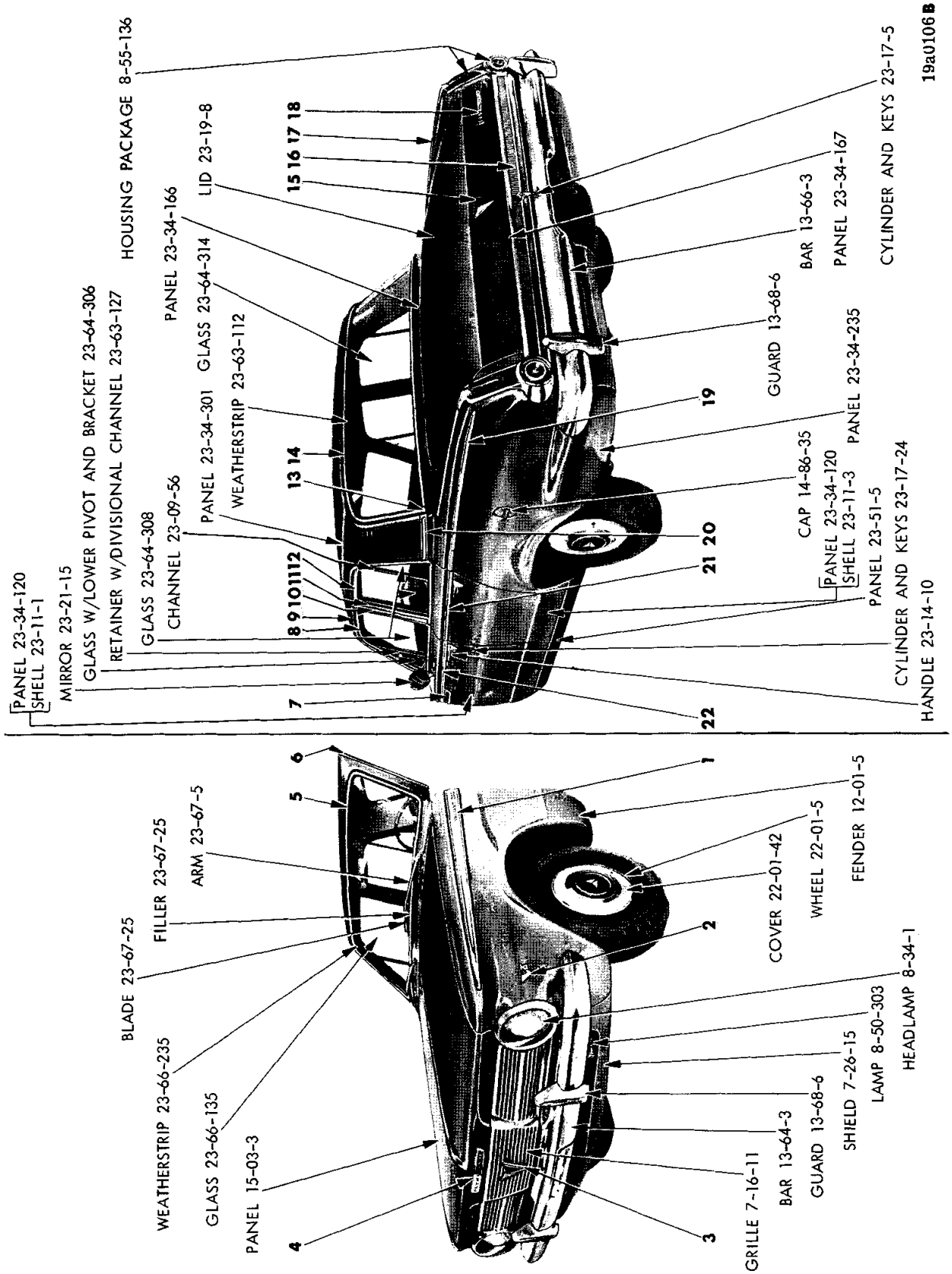

EXTERIOR VIEW - VALIANT V-H 4 DOOR SEDAN

MyMopar.com

REF. NO.	QTY	PART NUMBER	DESCRIPTION
1	1	2584 004-5	MOULDING PACKAGE, Fender Side (12-15-2)
	12	---- ---	Nut
2	2	2524 054	ORNAMENT, Fender Side, V8 (12-15-21)
	4	6023 685	Nut
3	1	2449 700	MEDALLION, Radiator Grille (7-17-1)
	3	6013 114	Nut
4	1	2583 215	NAME PLATE, Hood Front (15-06-3)
	2	274 754	Nut
5	1	2082 278	LOCKINGSTRIP, Windshield Glass Weatherstrip (23-66-239)
6	1	2484 424-5	MOULDING, Roof Side Drain Trough Front (23-59-61)
7	1	2602 446-7	MOULDING, w/Tie Plate, Front Door Front (23-23-32)
	4	---- ---	Retainer
8	1	2216 946-7	MOULDING, Front Door Window Frame Upper (23-23-32)
9	1	2255 936-7	MOULDING, Roof Side Drain Trough Rear (23-59-61)
10	1	2216 950-1	MOULDING, Front Door Window Frame Rear (23-23-32)
11	1	2216 950-1	MOULDING, Rear Door Window Frame Front (23-23-33)
12	1	2217 014-5	MOULDING, Rear Door Window Frame Upper (23-23-33)
13	2	2424 350	CAP, Rear Window Glass Weatherstrip Lockingstrip (23-63-117)
14	2	2424 426	LOCKINGSTRIP, Rear Window Glass Weatherstrip (23-63-114)
15	1	2526 268	MEDALLION, Deck Lid (23-19-114)
	2	---- ---	Washer
	2	9411 618	Nut
	2	6000 960	Clip
16	1	2526 137	PANEL, Deck Lower Panel Finish (23-23-28)
	8	6001 616	Retainer, Upper
	6	6001 617	Retainer, Lower
	6	6024 894	Washer
	8	6022 052	Washer
	14	6024 679	Nut
17	2	2525 959	MOULDING PACKAGE, Quarter Panel Peak (23-23-39)
	8	6001 647	Retainer
	8	116 000	Nut
18	1	2526 266	NAME PLATE, Deck Lid (23-19-114)
	2	---- ---	Washer
	2	---- ---	Nut
19	1	2525 972-3	MOULDING PACKAGE, Quarter Panel Lower (23-23-39)
	2	6001 730	Retainer
	2	6024 271	Screw
	10	6024 679	Nut
	8	6001 680	Retainer
	2	6001 678	Retainer
20	1	2584 496-7	MOULDING PACKAGE, Roof Side Extension (23-23-42)
	3	6023 097	Nut and Seal
21	1	2525 970-1	MOULDING PACKAGE, Rear Door (23-23-33)
	6	6001 730	Retainer
	4	6001 672	Retainer
	4	9417 621	Nut
22	1	2525 966-7	MOULDING PACKAGE, Front Door Rear (23-23-32)
	8	6001 730	Retainer
	2	6001 672	Retainer
	2	9417 621	Nut

All Packages Include Attaching Parts

Part Type Code is Indicated in Parentheses

EXTERIOR VIEW - VALIANT V-H 4 DOOR SEDAN

MyMopar.com

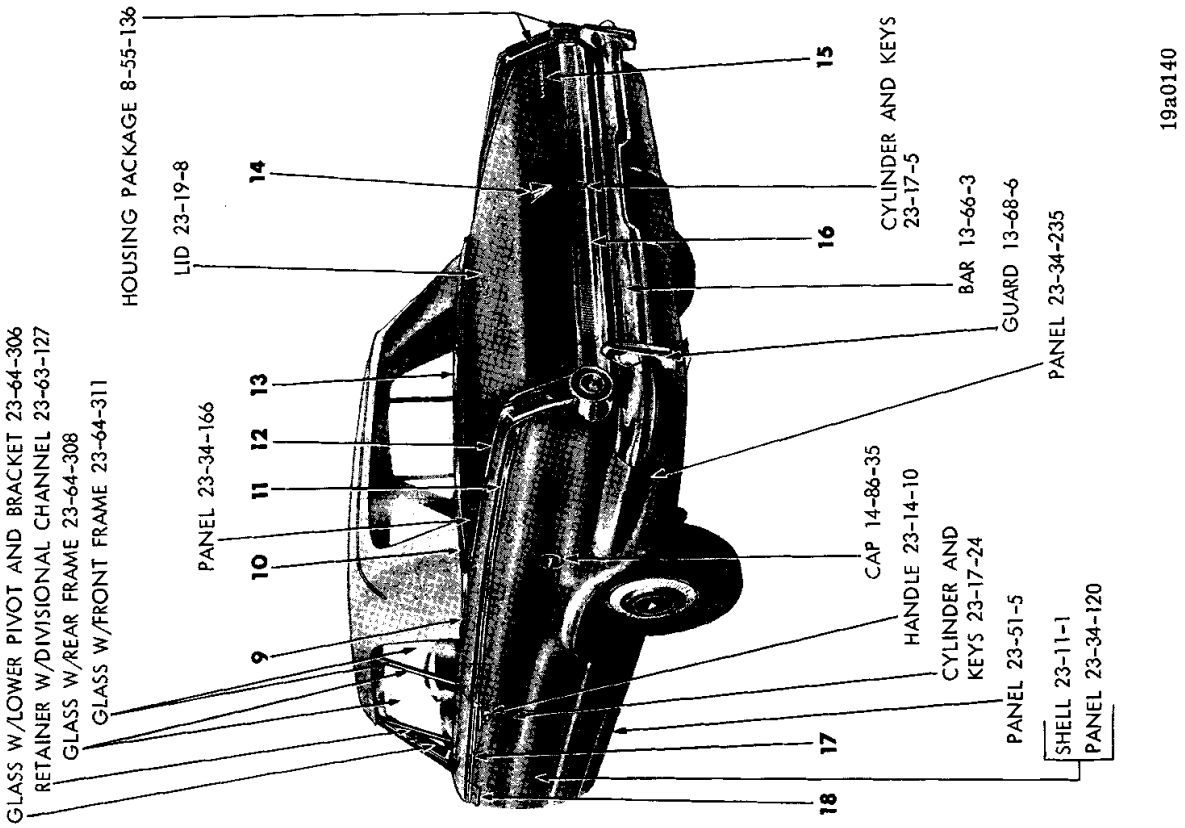

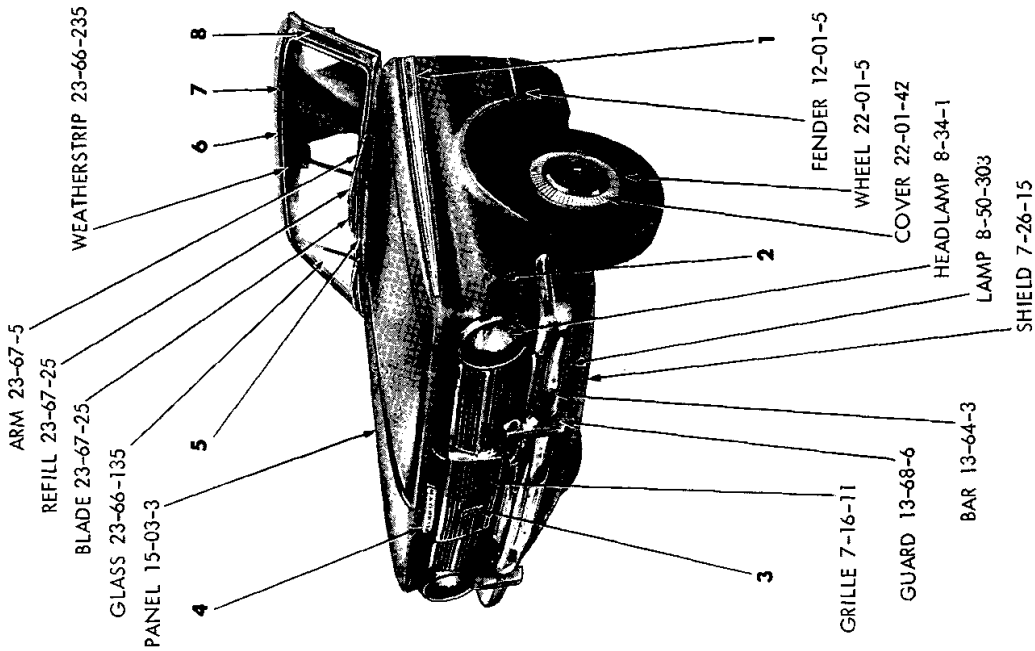

EXTERIOR VIEW - VALIANT V-H CONVERTIBLE COUPE

MyMopar.com

REF. NO.	QTY	PART NUMBER	DESCRIPTION
1	1	2584 004-5	MOULDING PACKAGE, Fender Side (12-15-2)
	12	---- ---	Nut
2	2	2524 054	ORNAMENT, Fender Side, V8 (12-15-21)
	4	6023 685	Nut
3	1	2449 700	ORNAMENT, Radiator Grille (7-17-1)
	3	6013 114	Nut
4	1	2583 215	NAME PLATE, Hood Front (15-06-3)
	2	274 754	Nut
5	1	2424 106	MOULDING, Windshield Outside Lower (23-23-65)
	7	6001 524	Clip and Seal
6	1	2082 278	LOCKINGSTRIP, Windshield Glass Weatherstrip (23-66-239)
7	1	2422 180-1	MOULDING, Windshield Header Outside Upper (23-23-65)
	7	6024 400	Screw and Sealer
8	1	2484 406-7	MOULDING, Windshield Opening Frame Outside Side (23-23-65)
	8	6024 271	Screw
9	1	2424 164-5	MOULDING, Quarter Outside Belt Front (23-23-39)
	2	6024 472	Fastener
	2	6023 898	Screw
10	1	2422 188-9	MOULDING, Quarter Panel Belt Rear (23-23-39)
	2	6024 472	Fastener
	16	6024 477	Fastener
11	1	2525 968-9	MOULDING PACKAGE
	8	6001 730	Retainer
	2	6024 271	Screw
	10	6024 679	Nut
	8	6001 680	Retainer
	2	6001 678	Retainer
12	1	2525 959	MOULDING PACKAGE, Quarter Outside Peak (23-23-39)
	8	6001 647	Retainer
	8	116 000	Nut
13	1	2424 105	COVER, Quarter Outside Panel Rear Belt Moulding Joint (23-23-41)
	1	2094 394	Fastener
14	1	2526 268	MEDALLION, Deck Lid (23-19-114)
	2	---- ---	Washer
	2	9411 618	Nut
	1	6000 960	Clip
15	1	2526 266	NAME PLATE, Deck Lid (23-19-114)
	2	---- ---	Washer
	2	---- ---	Nut
16	1	2526 137	PANEL, Deck Opening Lower Outside Finish (Special Equipment) (23-23-28)
	8	6001 616	Retainer, Upper
	6	6001 617	Retainer, Lower
	6	6024 894	Washer
	8	6022 052	Washer
	14	6024 679	Nut
17	1	2525 964-5	MOULDING PACKAGE, Door Outside Rear (23-23-32)
	10	6001 730	Retainer
	2	6001 672	Retainer
	2	9417 621	Nut
18	1	2602 446-7	MOULDING, Front Door Outside Front (23-23-32)

All Packages Include Attaching Parts

Part Type Code is Indicated in Parentheses

EXTERIOR VIEW - VALIANT V-H CONVERTIBLE COUPE

MyMopar.com

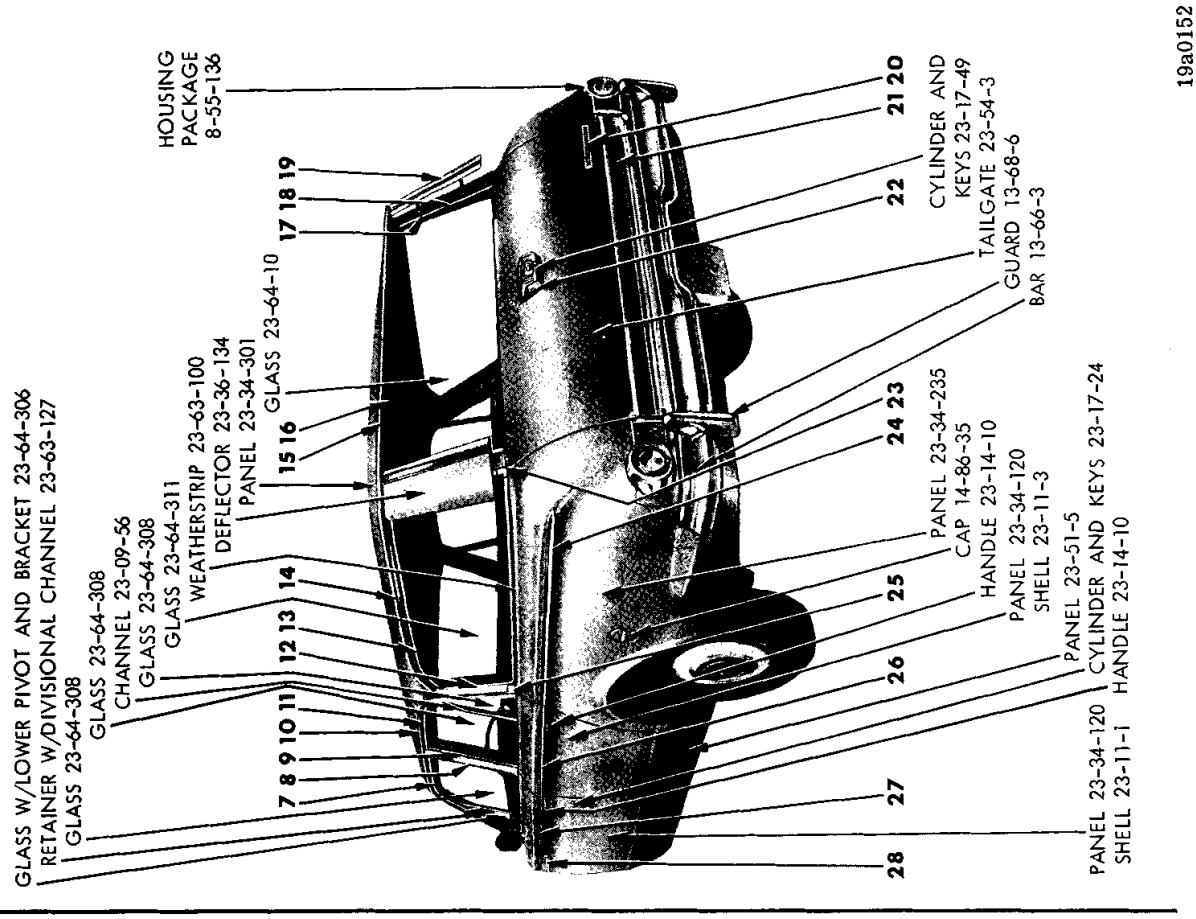

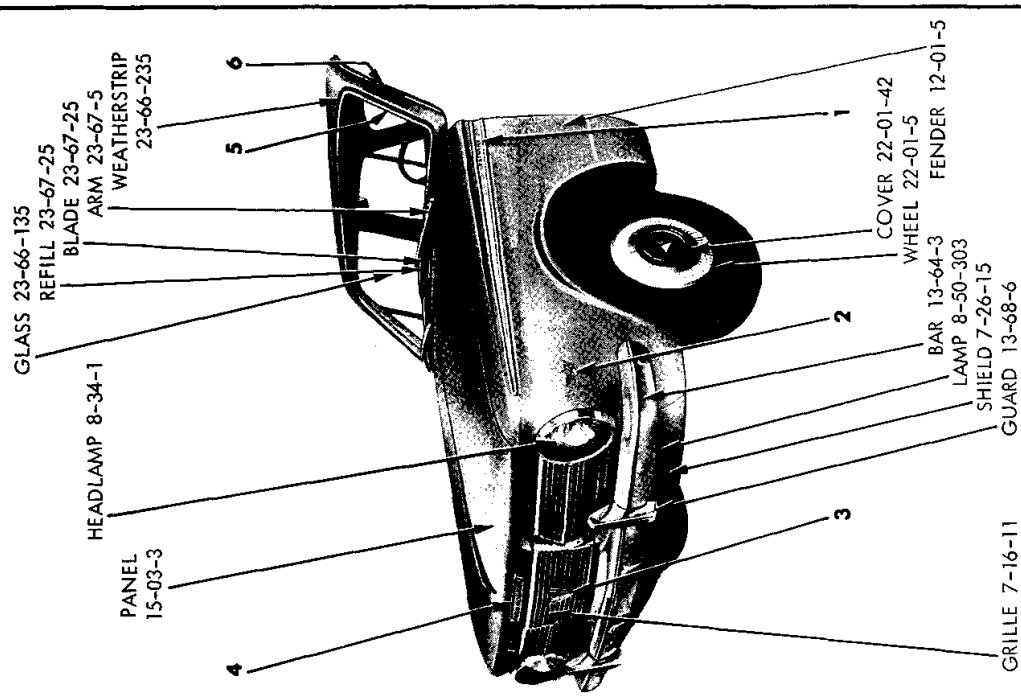

19a0152

EXTERIOR VIEW - VALIANT V-H STATION WAGON

MyMopar.com

REF. NO.	QTY	PART NUMBER	DESCRIPTION
1	1	2584 004-5	MOULDING PACKAGE, Fender Side (12-15-2)
	12	---- ---	Nut
2	2	2524 054	ORNAMENT, Fender Side (V8) (12-15-21)
	4	6023 685	Nut
	2	2578 632	NAME PLATE, Fender Side, (Special Equipment) Commando V-8 (12-15-21)
	4	6023 685	Nut
3	1	2449 700	MEDALLION, Radiator Grille (7-17-1)
	1	6013 114	Nut
	1	2449 717	Retainer, Radiator Grille
	3	6013 114	Nut and Washer
4	1	2583 215	NAME PLATE, Hood Frt.(15-06-3)
	2	1839 995	Nut
5	1	2082 278	LOCKINGSTRIP, Windshield Glass Weatherstrip (23-66-239)
6	1	2484 424-5	MOULDING, Roof Side Drain Trough Front (23-59-61)
7	1	2216 946-7	MOULDING, Front Door Window Opening Frame Upper and Front (23-23-32)
8	1	2216 950-1	MOULDING, Front Door Window Opening Frame Rear (23-23-32)
9	1	2216 950-1	MOULDING, Rear Door Window Opening Frame Front (23-23-33)
10	1	2255 936-7	MOULDING, Roof Drain Trough Side Rear (23-59-61)
11	1	2217 014-5	MOULDING, Rear Door Window Opening Frame Upper and Rear (23-23-33)
12	2	2424 625	CAP, Quarter Window Glass Lockingstrip Upper Front (23-63-114)
13	2	2243 513	LOCKINGSTRIP, Quarter Window Glass Weatherstrip (23-63-110)
14	1	2422 650-1	MOULDING, Roof Drain Trough Side (23-59-61)
15	1	2484 162-3	MOULDING, Roof Rear Drain Trough (23-59-61)
16	1	2448 401	MOULDING PACKAGE, Tailgate Opening Upper (23-23-60)
	5	6001 451	Clip
17	1	2421 577-8	MOULDING PACKAGE, Rear Upper Pillar Outside (23-23-60)
	6	6001 076	Clip
	4	6024 271	Screw
	4	6001 077	Clip
18	1	2421 579-80	MOULDING PACKAGE, Rear Upper Pillar Outside (23-23-60)
	4	6001 077	Clip
	4	6024 271	Screw
	2	9418 471	Screw
19	1	2484 756-7	MOULDING, Rear Upper Pillar Air Deflector (23-23-60)
20	1	2526 266	NAME PLATE, Tailgate (Plymouth) (23-54-11)
	2	---- ---	Nut
	2	---- ---	Washer
21	1	2526 248	PANEL, Tailgate Outside Finish (23-23-77)
	6	---- ---	Retainer and Stud
	12	---- ---	Nut
	6	---- ---	Retainer and Stud
	6	6022 052	Washer
	6	6024 894	Washer
22	1	2299 752	ORNAMENT w/Stud, Tailgate Electric Window Regulator Outside (23-54-11)
23	2	2424 626	CAP, Quarter Window Glass Lockingstrip Lower Front (23-63-114)
24	1	2525 974-5	MOULDING PACKAGE, Quarter Outside (23-23-39)
	6	6001 730	Retainer
	2	6001 724	Retainer and Seal
25	1	2584 510-1	BASE and INSERT PACKAGE, Roof Panel Extension Moulding (23-23-51)
	2	6006 264	Nut
	2	---- ---	Washer
	2	6024 741	Washer
26	1	2525 970-1	MOULDING PACKAGE, Rear Door Outside (23-23-33)
	6	6001 730	Retainer
	4	6001 672	Retainer
	4	9417 621	Nut
27	1	2525 966-7	MOULDING PACKAGE, Front Door Rear (23-23-32)
	10	6001 730	Retainer
	2	6001 672	Retainer
	2	9417 621	Nut
28	1	2602 446-7	MOULDING, Front Door Front (23-23-32)

All Packages Include Attaching Parts

Part Type Code is Indicated in Parentheses

EXTERIOR VIEW - VALIANT V-H STATION WAGON

MyMopar.com

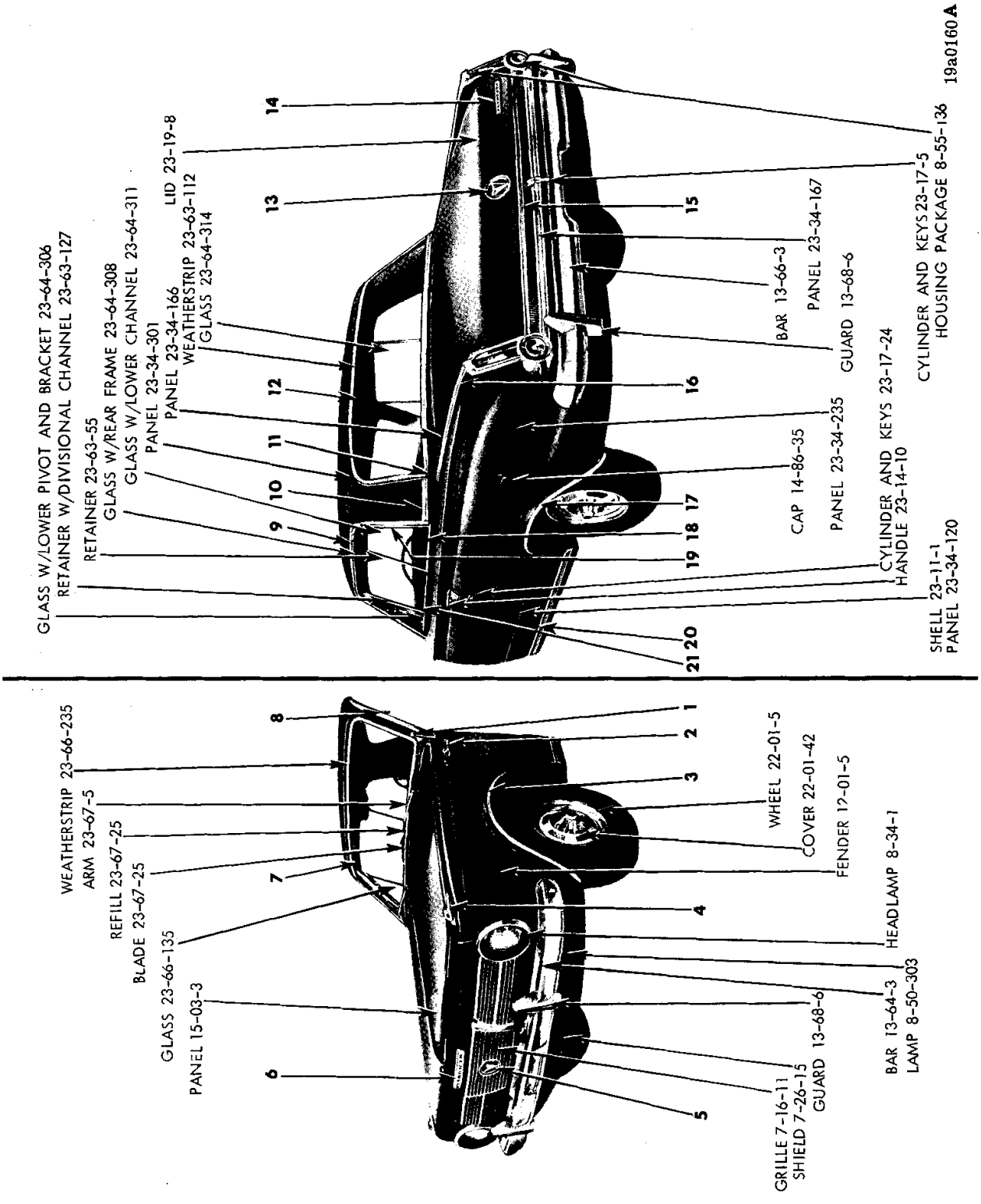

EXTERIOR VIEW - VALIANT V-P 2 DOOR HARDTOP

MyMopar.com

REF. NO.	QTY	PART NUMBER	DESCRIPTION
1	1	2528 332-3	MOULDING, Front Pillar Lower, w/Vinyl Roof (23-23-14)
	2	---- ---	Screw
2	2	2449 709	NAME PLATE, Fender Side, Signet (12-15-21)
	4	---- ---	Washer
	4	6000 616	Nut
	2	6000 050	Clip
3	1	2449 706-7	MOULDING, Fender Wheel Opening (12-15-2)
	16	6024 271	Screw
4	1	2524 942-3	ORNAMENT, Fender Top (12-15-21)
	2	6024 702	Seal
	2	---- ---	Seal
	4	6023 685	Nut
5	1	2524 912	MEDALLION, Radiator Grille (7-17-1)
	3	6013 114	Screw
6	1	2583 215	NAME PLATE, Hood Front (15-06-3)
	2	274 754	Nut
7	1	2082 278	LOCKINGSTRIP, Windshield Glass Weatherstrip (23-66-239)
8	1	2484 424-5	MOULDING, Roof Side Drain Trough Front, w/o Vinyl Roof (23-59-61)
	1	2495 902-3	MOULDING PACKAGE, Roof Side Drain Trough Front, w/Vinyl Roof (23-59-61)
	18	6024 271	Screw, w/Vinyl Roof
9	1	2255 936-7	MOULDING, Roof Drain Trough Side Rear, w/o Vinyl Roof (23-59-61)
	1	2495 900-1	MOULDING PACKAGE, Roof Drain Trough Side Rear, w/Vinyl Roof (23-59-61)
	14	6024 271	Screw, w/Vinyl Roof
	6	2574 309	Clip, w/Vinyl Roof
10	1	2584 496-7	MOULDING PACKAGE, Roof Side Extension (w/o Vinyl Roof) (23-23-42)
	1	2584 498-9	MOULDING PACKAGE, Roof Side Extension (use w/Vinyl Roof) (23-23-42)
	6	9411 618	Nut
	6	6024 711	Washer
11	2	2424 350	CAP, Rear Window Glass Weatherstrip Lockingstrip (23-63-117)
12	2	2424 426	LOCKINGSTRIP, Rear Window Glass Weatherstrip (23-63-114)
13	1	2528 688	MEDALLION, Deck Lid (23-19-114)
	2	---- ---	Washer
	2	9411 618	Nut
	1	6000 960	Clip
14	1	2526 266	NAME PLATE, Deck Lid (23-19-114)
	2	---- ---	Washer
	2	---- ---	Nut
15	1	2526 137	PANEL, Deck Lower Panel Finish (23-23-28)
	8	6001 616	Retainer, Upper
	6	6001 617	Retainer, Lower
	6	6024 894	Washer
	8	6022 052	Washer
	14	6024 679	Nut
16	2	2525 959	MOULDING PACKAGE, Quarter Panel Peak (23-23-39)
	8	6001 647	Retainer
	8	116 000	Nut
17	1	2526 262-3	MOULDING, Quarter Panel Wheel Opening (23-23-39)
	16	6024 271	Screw
18	1	2448 432-3	MOULDING PACKAGE, Quarter Panel Belt (23-23-39)
	6	6001 490	Retainer
	2	6024 405	Screw
19	1	2480 916-7	MOULDING and WEATHERSTRIP RETAINER, Quarter Window Outside (23-23-73)
	10	6024 653	Screw
20	1	2525 976-7	MOULDING PACKAGE, Body Side Sill (23-23-2)
	20	6001 790	Retainer 2 6025 187 Screw
21	1	2448 430-1	MOULDING PACKAGE, Door Belt (23-23-32)
	10	6001 490	Retainer
	2	6001 440	Retainer
	2	9415 312	Nut

All Packages Include Attaching Parts

Part Type Code is Indicated in Parentheses

EXTERIOR VIEW - VALIANT V-P 2 DOOR HARDTOP

MyMopar.com

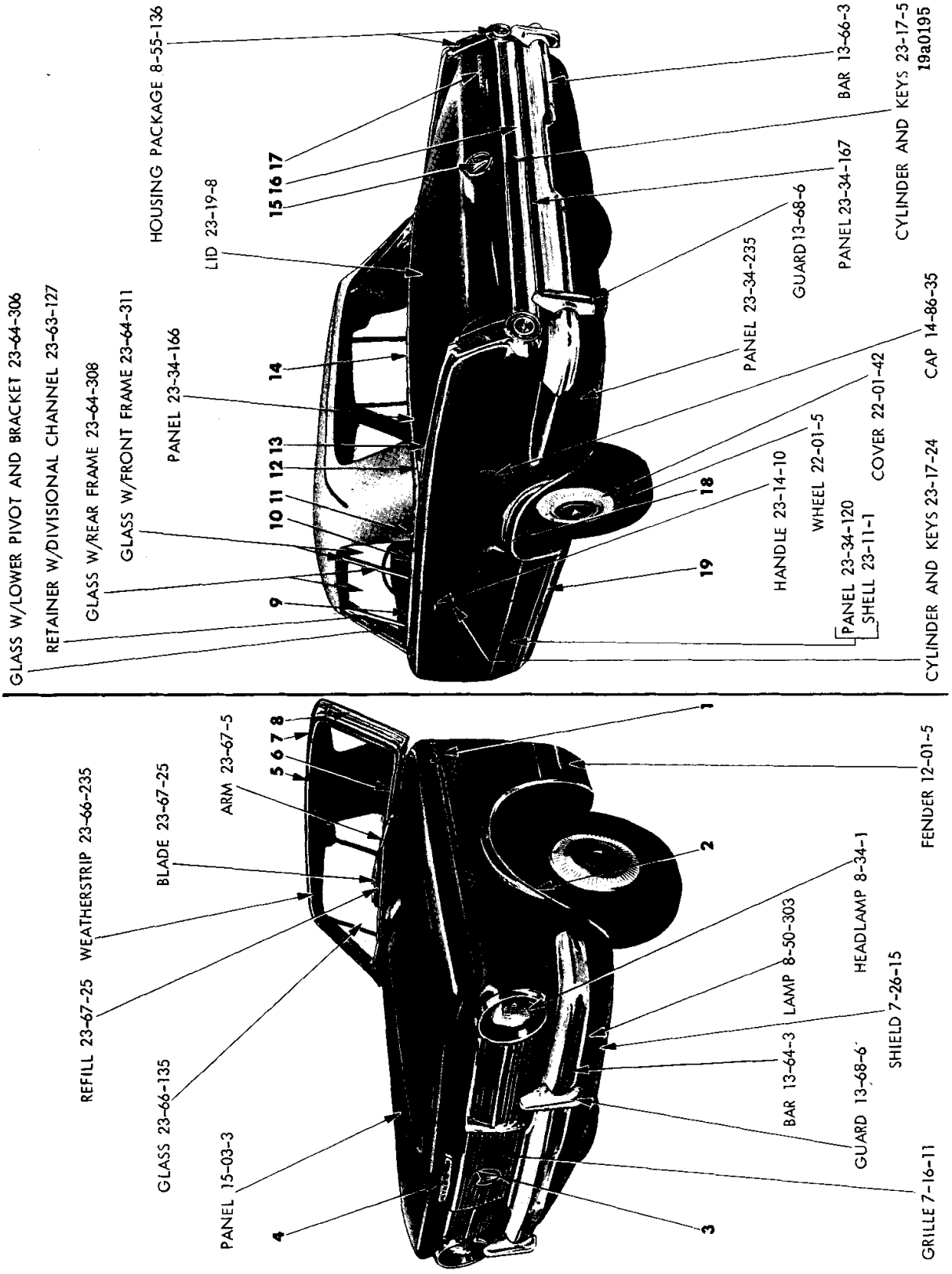

EXTERIOR VIEW - VALIANT V-P CONVERTIBLE COUPE

MyMopar.com

REF. NO.	QTY	PART NUMBER	DESCRIPTION
1	2	2449 709	NAME PLATE, Fender Side, Signet (12-15-21)
	4	---- ---	Washer
	4	6000 616	Nut
	2	6000 050	Clip
2	1	2449 706-7	MOULDING PACKAGE, Fender Wheel Opening (12-15-2)
	16	6024 271	Screw
3	1	2524 912	MEDALLION, Radiator Grille (7-17-1)
4	1	2583 215	NAME PLATE, Hood Front (Plymouth) (15-06-3)
	2	274 754	Nut
5	1	2082 278	LOCKINGSTRIP, Windshield Glass Weatherstrip (23-66-239)
6	1	2424 106	MOULDING, Windshield Outside Lower (23-23-65)
	7	9416 136	Screw
	7	6001 442	Retainer
7	1	2422 180-1	MOULDING, Windshield Header Outside Upper (23-23-65)
	7	6024 400	Screw
	7	2254 766	Seal
8	1	2484 406-7	MOULDING, Windshield Opening Frame Outside Side (23-23-65)
	8	6022 890	Screw
9	1	2448 430-1	MOULDING PACKAGE, Door Outside Belt (23-23-32)
	10	6001 490	Retainer
	2	6001 440	Retainer
	2	9415 312	Nut
10	1	2525 582-3	MOULDING PACKAGE, Quarter Panel Belt Front (23-23-39)
	6	6001 490	Retainer
	2	168 474	Screw
11	1	2424 168-9	MOULDING, Quarter Panel Belt Intermediate (23-23-39)
	2	6024 638	Screw
12	1	2422 188-9	MOULDING, Quarter Panel Belt Rear (23-23-39)
	2	6024 472	Fastener
	16	6024 477	Fastener
13	2	2525 959	MOULDING PACKAGE, Quarter Outside Peak (23-23-39)
	8	6001 647	Retainer
	8	116 000	Nut
14	1	2424 105	COVER, Quarter Outside Panel Rear Belt Moulding Joint
	1	2094 394	Fastener
15	1	2528 688	MEDALLION, Deck Lid (23-19-114)
	2	---- ---	Washer
	2	9411 618	Nut
	1	6000 960	Clip
16	1	2526 137	PANEL, Deck Opening Lower Outside Finish (23-23-28)
	8	6001 616	Retainer, Upper
	6	6001 617	Retainer, Lower
	6	6024 894	Washer
	8	6022 052	Washer
	14	6024 679	Nut
17	1	2526 266	NAME PLATE, Deck Lid (Plymouth) (23-19-114)
	2	---- ---	Washer
	2	---- ---	Nut
18	1	2526 262-3	MOULDING, Quarter Panel Wheel Opening (23-23-39)
	16	6024 271	Screw
19	1	2525 976	MOULDING PACKAGE, Body Side Sill (23-23-2)
	20	6001 790	Retainer

All Packages Include Attaching Parts

Part Type Code is Indicated in Parentheses

EXTERIOR VIEW - VALIANT V-P CONVERTIBLE COUPE

MyMopar.com

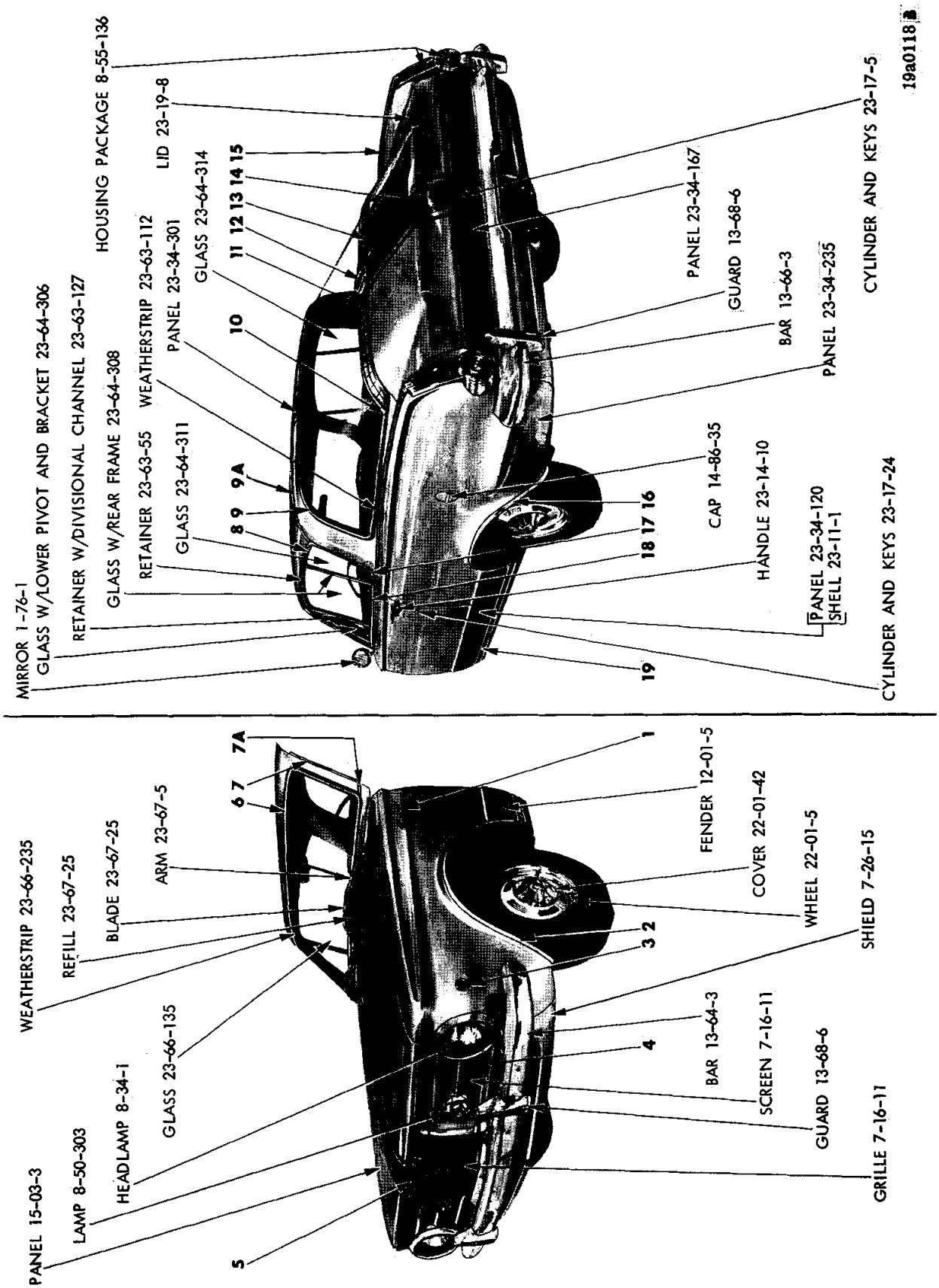

EXTERIOR VIEW - VALIANT V-P BARRACUDA 2 DOOR HARDTOP

MyMopar.com

REF. NO.	QTY	PART NUMBER	DESCRIPTION
1	2	2579 258-9	NAME PLATE, Fender Side, Barracuda (12-15-21)
	6	6023 260	Nut
2	1	2449 706-7	MOULDING, Fender Wheel Opening (12-15-2)
	16	6024 271	Screw
3	2	2579 442	ORNAMENT, Fender Side, Formula "S" (12-15-21)
	4	6026 095	Nut
4	1	2524 148-9	FRAME, Radiator Grille (7-16-36)
	18	9418 419	Screw
	4	6006 264	Nut
	2	6023 912	Screw
	2	120 375	Nut
	2	180 078	Screw
5	1	2583 215	NAME PLATE, Hood Front (15-06-3)
	2	1839 995	Nut
6	1	2082 278	LOCKINGSTRIP, Windshield Glass Weatherstrip (23-66-239)
7	1	2484 424-5	MOULDING, Roof Side Drain Trough Front (w/o Vinyl Roof) (23-59-61)
	1	2605 060-1	MOULDING, Roof Front Drain Trough (w/Vinyl Roof) (23-59-61)
	6	6024 271	Screw
	6	2574 309	Clip
7A	1	2528 332-3	MOULDING, Body Front Pillar Lower (use w/Vinyl Roof) (23-23-14)
	2	---- ---	Screw
8	1	2602 116-7	MOULDING, Roof Side Drain Trough (w/o Vinyl Roof) (23-59-61)
	1	2603 870-1	MOULDING, Roof Side Drain Trough (w/Vinyl Roof) (23-59-61)
	10	6002 074	Clip
	10	6023 938	Screw
9	1	2424 426	LOCKINGSTRIP, Rear Window Glass Weatherstrip Lower (23-63-114)
	1	2082 278	LOCKINGSTRIP, Rear Window Glass Weatherstrip Upper and Sides (23-63-114)
9A	1	2605 058-9	MOULDING, Roof Outside Rear (w/Vinyl Roof) (23-23-42)
	8	6023 975	Screw
	2	2605 078	Spacer
	2	9423 316	Screw
10	2	2424 350	CAP, Rear Window Glass Weatherstrip Lockingstrip (23-63-117)
11	1	2526 824-5	MOULDING, Deck Upper Panel Hinge (23-23-31)
	4	121 752	Washer
	4	---- ---	Screw
12	1	2525 586	PANEL PACKAGE, Deck Upper Panel Finish (23-23-17)
	4	---- ---	Washer
	4	---- ---	Nut
13	1	2525 584-5	PANEL PACKAGE, Deck Upper Panel Finish (23-23-17)
	2	---- ---	Nut
	2	116 000	Nut
14	1	2528 974	"P", Deck Lid Name Letter (23-19-114)
	1	2528 975	"L"
	1	2528 976	"Y"
	1	2528 977	"M"
	1	2528 978	"O"
	1	2528 979	"U"
	1	2528 980	"T"
	1	2528 981	"H"
	16	152 259	Nut
15	2	2584 635	MOULDING PACKAGE, Quarter Panel Peak (23-23-39)
	2	6001 647	Retainer
	2	116 000	Nut
	18	6001 723	Retainer
16	1	2526 262-3	MOULDING, Quarter Panel Wheel Opening (23-23-39)
	16	6024 271	Screw
17	1	2529 112-3	MOULDING, Quarter Window Outside (23-23-73)
	2	6023 938	Screw
	6	168 634	Screw
18	1	2448 430-1	MOULDING PACKAGE, Front Door (23-23-32)
	10	6001 490	Retainer
	2	6001 440	Retainer
	2	9415 312	Nut
19	1	2525 976-7	MOULDING, Body Side Sill (23-23-2)
	20	6001 790	Retainer

All Packages Include Attaching Parts

Part Type Code is Indicated in Parentheses

EXTERIOR VIEW - VALIANT V-P BARRACUDA 2 DOOR HARDTOP

MyMopar.com

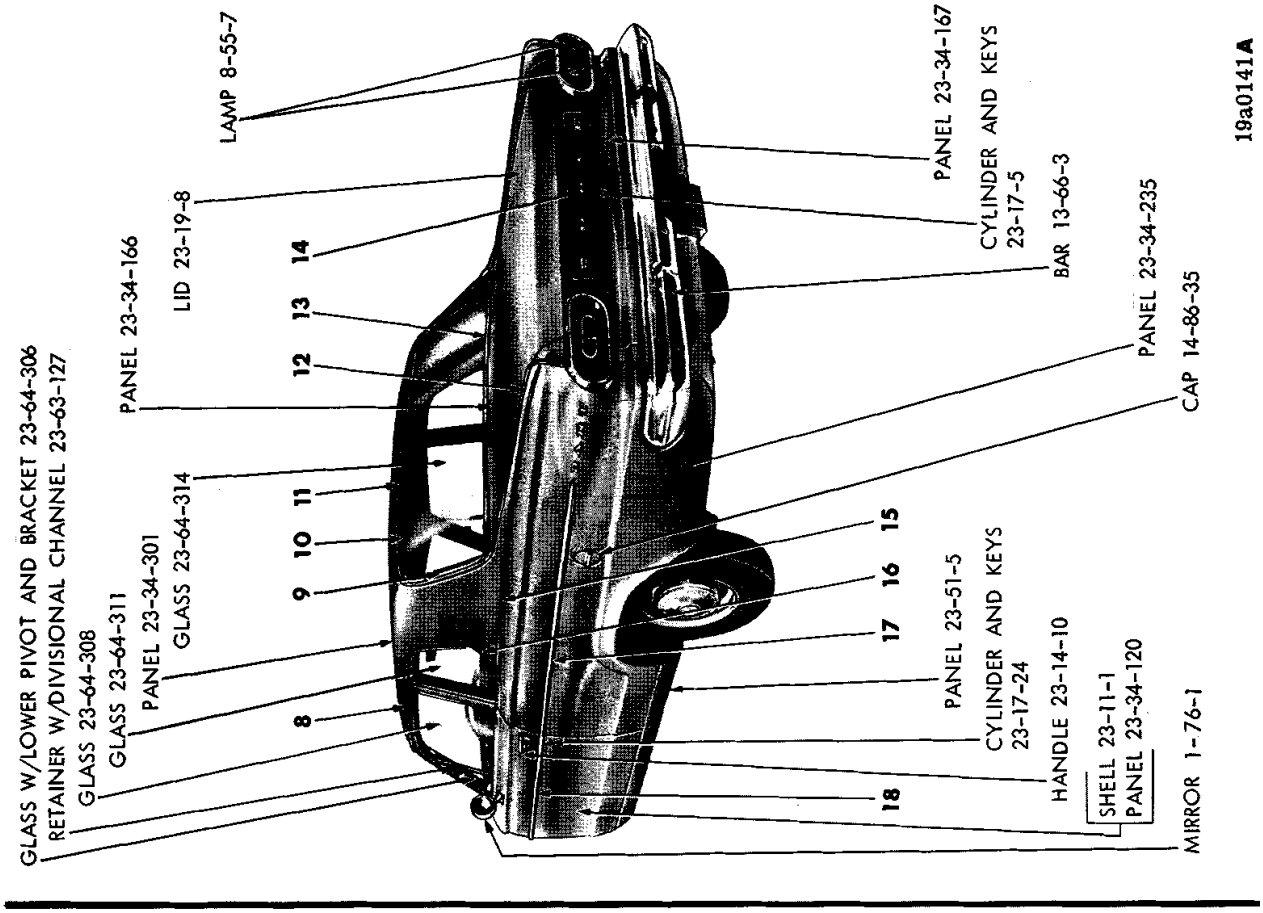

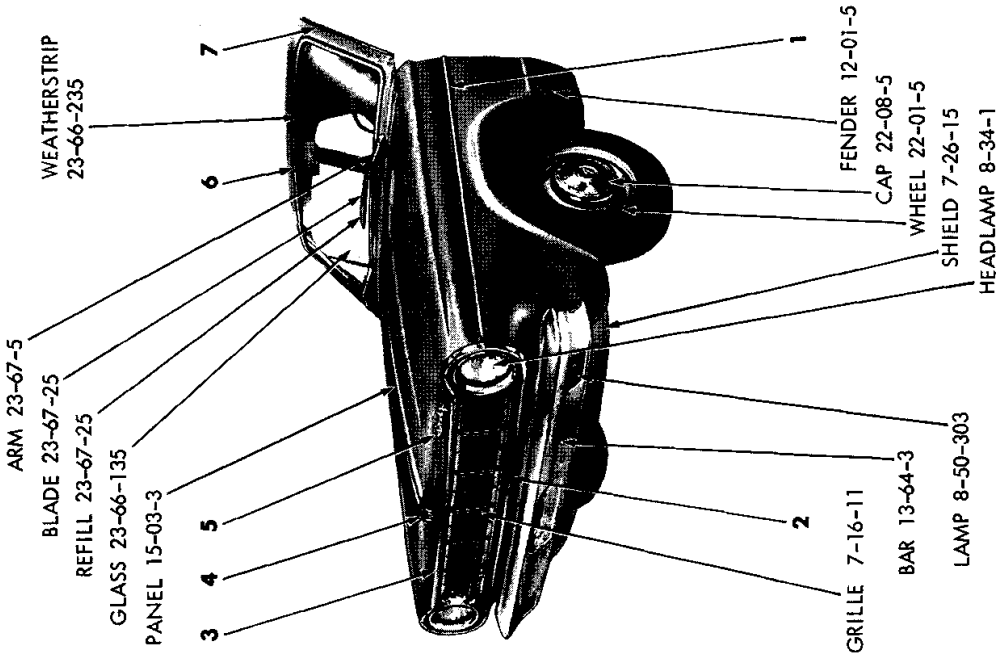

EXTERIOR VIEW - DART L-L 2 DOOR SEDAN

MyMopar.com

REF. NO.	QTY	PART NUMBER	DESCRIPTION
1	1	2584 074-5	MOULDING PACKAGE, Fender Side (12-15-2)
	14	6001 716	Retainer
	4	6006 412	Retainer
	4	---- ---	Nut
2	1	2584 078-9	MOULDING PACKAGE, Fender Headlamp and Air Shield (12-15-2)
	14	6001 851	Clip
	14	---- ---	Nut
3	1	2584 080	MOULDING PACKAGE, Hood Front (15-25-2)
	7	6001 851	Clip
	7	116 000	Nut
4	1	2524 859	MEDALLION, w/Insert, Hood Front (15-06-3)
	1	6000 050	Clip
	2	6025 127	Washer
5	1	2449 715	NAME PLATE, Hood Front (15-06-3)
	4	1839 995	Nut
6	1	2082 278	LOCKINGSTRIP, Windshield Glass Weatherstrip (23-66-239)
7	1	2484 424-5	MOULDING, Roof Side Drain Trough Front (23-59-61)
8	1	2422 432-3	MOULDING, Roof Side Drain Trough Rear (23-59-61)
9	1	2495 284-5	MOULDING PACKAGE, Rear Window Outside Side (23-23-52)
	6	6001 084	Retainer and Screw
10	1	2495 279	MOULDING PACKAGE, Rear Window Outside Upper (23-23-52)
	8	6001 084	Retainer and Screw
11	1	2481 050-1	MOULDING, Roof Panel Outside Rear (23-23-42)
	16	6001 084	Retainer and Screw
12	1	2495 376-7	MOULDING PACKAGE, Quarter Panel Peak (23-23-39)
	16	6001 097	Retainer
	16	---- ---	Nut
13	1	2495 286	MOULDING PACKAGE, Rear Window Outside Lower (23-23-52)
	5	6001 084	Retainer and Screw
14	2	2526 929	"D", Deck Lid Name Letter (23-19-114)
	1	2526 930	"O"
	1	2526 931	"G"
	1	2526 932	"E"
	10	6024 708	Seal
	10	9415 250	Nut
15	1	2495 374-5	MOULDING PACKAGE, Quarter Panel Paint Break Rear (23-23-39)
	10	6001 443	Retainer
	10	6001 432	Retainer
	10	6023 260	Nut
16	1	2495 372-3	MOULDING PACKAGE, Quarter Panel Paint Break Front (23-23-39)
	2	6023 898	Screw
	2	9415 250	Nut
17	1	2525 986-7	MOULDING PACKAGE, Quarter Panel Lower (23-23-39)
	2	6025 277	Rivet
	8	6001 807	Retainer
	14	6024 679	Nut
	6	6006 412	Retainer
18	2	2525 980	MOULDING PACKAGE, Door (23-23-32)
	2	6001 572	Retainer
	4	9417 621	Nut
	2	6001 836	Retainer

All Packages Include Attaching Parts

Part Type Code is Indicated in Parentheses

EXTERIOR VIEW - DART L-L 2 DOOR SEDAN

MyMopar.com

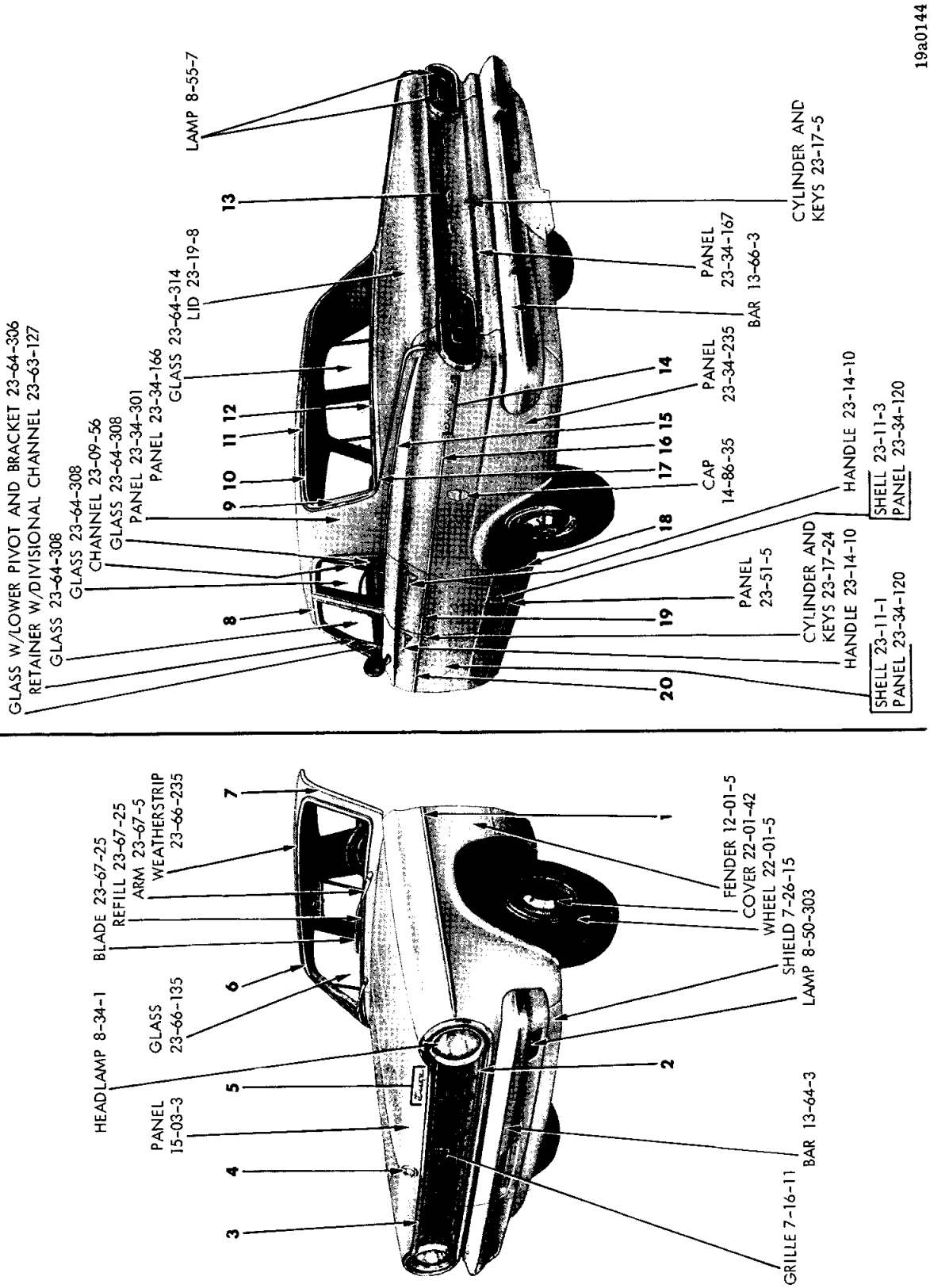

EXTERIOR VIEW - DART L-L 4 DOOR SEDAN

MyMopar.com

REF. NO.	QTY	PART NUMBER	DESCRIPTION
1	1	2584 074-5	MOULDING PACKAGE, Fender Side (12-15-2)
	14	6001 716	Retainer
	4	6006 412	Retainer
	4	---- ---	Nut
2	1	2584 078-9	MOULDING PACKAGE, Fender Headlamp and Air Shield (12-15-2)
	14	6001 851	Clip
	14	---- ---	Nut
3	1	2584 080	MOULDING PACKAGE, Hood Front (15-25-2)
	7	6001 851	Clip
	7	116 000	Nut
4	1	2524 859	MEDALLION, w/Insert, Hood Front (15-06-3)
	1	6000 050	Clip
	2	6025 127	Washer
5	1	2449 715	NAME PLATE, Hood Front (15-06-3)
	4	1839 995	Nut
6	1	2082 278	LOCKINGSTRIP, Windshield Glass Weatherstrip (23-66-239)
7	1	2484 424-5	MOULDING, Roof Drain Trough Side Front (23-59-61)
8	1	2255 936-7	MOULDING, Roof Drain Trough Side Rear (23-59-61)
9	1	2495 284-5	MOULDING PACKAGE, Rear Window Outside Side (23-23-52)
	6	6001 084	Retainer and Screw
10	1	2495 279	MOULDING PACKAGE, Rear Window Outside Upper (23-23-52)
	8	6001 084	Retainer and Screw
11	1	2481 050-1	MOULDING, Roof Panel Outside Rear (23-23-42)
12	1	2495 286	MOULDING PACKAGE, Rear Window Outside Lower (23-23-52)
	5	6001 084	Retainer and Screw
13	2	2526 929	"D", Deck Lid Name Letter (23-19-114)
	1	2526 930	"O"
	1	2526 931	"G"
	1	2526 932	"E"
	10	6024 708	Seal
	10	9415 250	Nut
14	2	2526 250	LETTER "D", Quarter Panel (23-34-238)
	1	2526 251	"A"
	1	2526 252	"R"
	1	2526 253	"T"
	16	6023 260	Nut
15	1	2495 408-9	MOULDING PACKAGE, Quarter Panel Paint Break (23-23-39)
	10	6001 456	Retainer
	10	6001 432	Retainer
	10	6023 260	Nut
16	1	2525 990-1	MOULDING PACKAGE, Quarter Panel Lower (23-23-39)
	2	6025 277	Rivet
	32	6001 716	Retainer
17	1	2495 376-7	MOULDING PACKAGE, Quarter Panel Peak (23-23-39)
	16	6001 097	Retainer
	16	---- ---	Nut
18	1	2526 976-7	DEFELCTOR, Quarter Panel Wheel Opening Stone (23-34-240)
	6	6024 288	Screw
	2	---- ---	Washer
	2	---- ---	Nut
19	1	2525 988-9	MOULDING PACKAGE, Rear Door (23-23-33)
	6	6001 572	Retainer
	6	9417 621	Nut
20	2	2525 981	MOULDING PACKAGE, Front Door (23-23-32)
	8	6001 572	Retainer
	8	9417 621	Nut

All Packages Include Attaching Parts

Part Type Code is Indicated in Parentheses

EXTERIOR VIEW - DART L-L 4 DOOR SEDAN

MyMopar.com

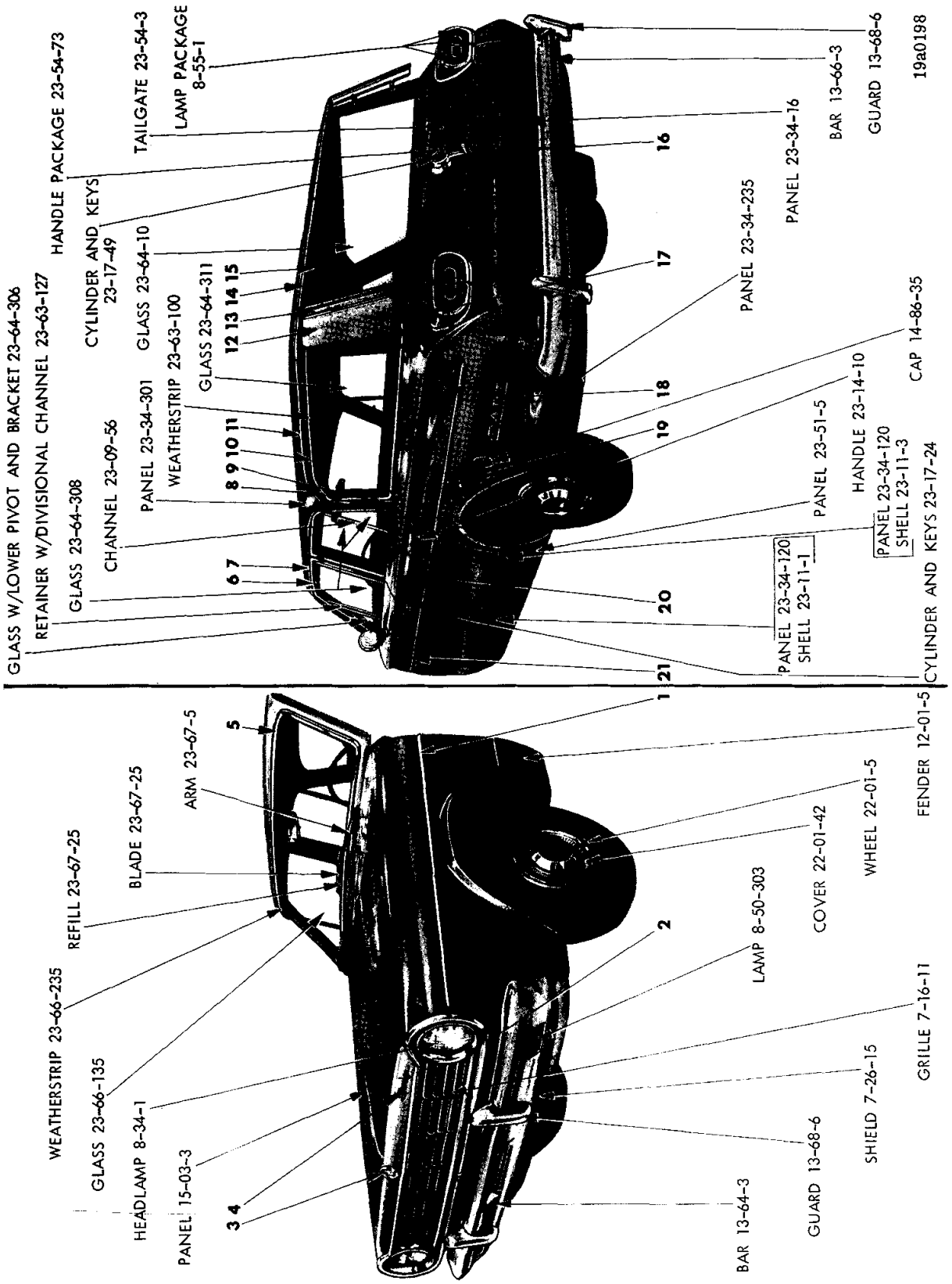

EXTERIOR VIEW - DART L-L STATION WAGON

MyMopar.com

REF. NO.	QTY	PART NUMBER	DESCRIPTION
1	1	2584 074-5	MOULDING PACKAGE, Fender Side (12-15-2)
	14	6001 716	Retainer
	4	6006 412	Retainer
	4	---- ---	Nut
2	1	2584 078-9	MOULDING PACKAGE, Fender Headlamp and Air Shield (12-15-2)
	14	6001 851	Clip
	14	---- ---	Nut
3	1	2524 859	MEDALLION, w/Insert, Hood Front (15-06-6)
	1	6000 050	Clip
	2	6025 127	Washer
4	1	2449 715	NAME PLATE, Hood Front (Dodge) (15-06-3)
	4	1839 995	Nut
5	1	2082 278	LOCKINGSTRIP, Windshield Glass Weatherstrip (23-66-239)
6	1	2484 424-5	MOULDING, Roof Side Drain Trough Front (23-59-61)
7	1	2255 936-7	MOULDING, Roof Drain Trough Side Rear (23-59-61)
8	2	2424 625	CAP, Quarter Window Locking-strip Upper Front (23-63-117)
9	1	2525 994-5	MOULDING PACKAGE, Roof Side Extension (23-23-42)
	2	6024 705	Washer
	2	9411 618	Nut
	2	6024 702	Washer
10	2	2243 513	LOCKINGSTRIP, Quarter Window Glass Weatherstrip (23-63-110)
11	1	2422 650-1	MOULDING, Roof Drain Trough Side (23-59-61)
12	1	2484 444-5	DEFLECTOR, Roof Panel Outside Air (23-36-134)
	2	6024 814	Screw
	4	6024 815	Screw
13	1	2421 577-8	MOULDING PACKAGE, Rear Upper Pillar Outside (23-23-60)
	6	6001 076	Clip
	4	6024 271	Screw
	4	6001 077	Clip
14	1	2484 162-3	MOULDING, Roof Rear Drain Trough (23-59-61)
15	1	2448 401	MOULDING PACKAGE, Tailgate Opening Upper (23-23-60)
	5	6001 451	Clip
16	2	2417 677	LETTER "D", Tailgate Outside Panel (23-54-11)
	1	2417 678	"O"
	1	2417 680	"G"
	1	2417 681	"E"
	5	9415 250	Nut
17	2	2424 626	CAP, Quarter Window Locking-strip Lower Rear (23-63-117)
18	2	2526 250	LETTER "D", Quarter Panel (23-34-238)
	2	2526 251	"A"
	2	2526 252	"R"
	2	2526 253	"T"
	16	6001 558	Nut
19	1	2525 992-3	MOULDING PACKAGE, Quarter Outside (23-23-39)
	2	6025 277	Rivet
	12	6001 716	Retainer and Seal
20	1	2525 988-9	MOULDING PACKAGE, Rear Door Outside (23-23-33)
	6	6001 572	Retainer
	6	9417 621	Nut
21	2	2525 981	MOULDING PACKAGE, Front Door Outside (23-23-32)
	4	6001 836	Retainer
	4	9417 621	Nut

All Packages Include Attaching Parts

Part Type Code is Indicated in Parentheses

EXTERIOR VIEW - DART L-L STATION WAGON

MyMopar.com

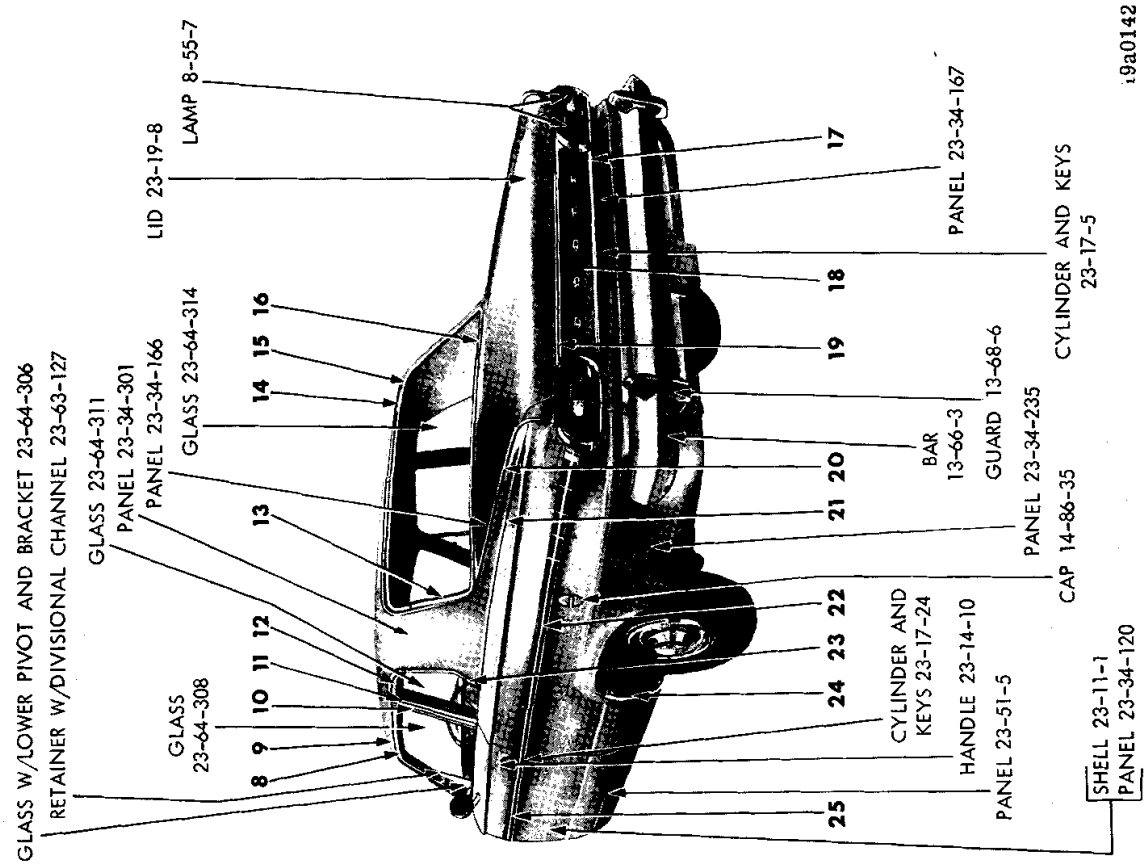

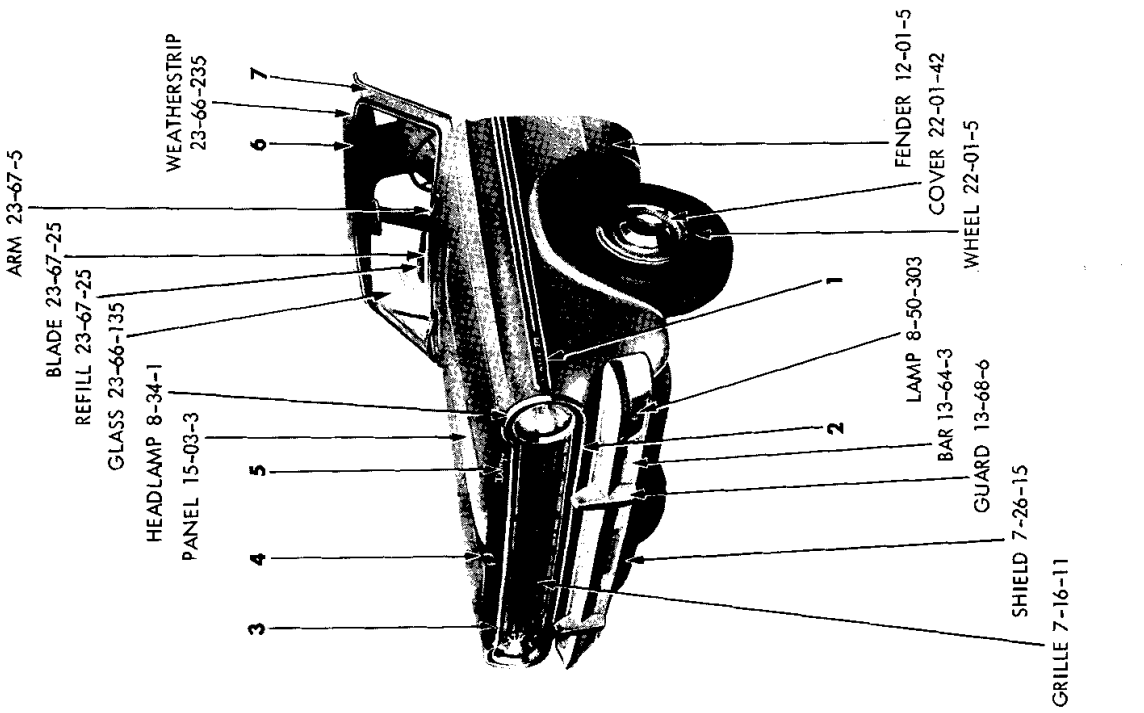

EXTERIOR VIEW - DART L-H 2 DOOR SEDAN

MyMopar.com

REF. NO.	QTY	PART NUMBER	DESCRIPTION
1	1	2584 072-3	MOULDING PACKAGE, Fender Side (12-15-2)
	8	6001 630	Retainer
	4	6001 548	Retainer
	2	6001 788	Retainer
	4	---- ---	Nut
2	1	2584 078-9	MOULDING PACKAGE, Fender Headlamp and Air Shield (12-15-2)
	14	6001 851	Clip
	14	---- ---	Nut
3	1	2584 080	MOULDING PACKAGE, Hood Front (15-25-2)
	7	6001 851	Clip
	7	116 000	Nut
4	1	2524 859	MEDALLION, w/Insert, Hood Front (15-06-3)
	1	6000 050	Clip
	1	6025 127	Washer
5	1	2449 715	NAME PLATE, Hood Front (15-06-3)
	4	1839 995	Nut
6	1	2082 278	LOCKINGSTRIP, Windshield Glass Weatherstrip (23-66-239)
7	1	2484 424-5	MOULDING, Roof Side Drain Trough Front (23-59-61)
8	1	2216 944-5	MOULDING, Front Door Window Opening Frame Upper and Front (23-23-32)
9	1	2422 432-3	MOULDING, Roof Drain Trough Side Rear (23-59-61)
10	1	2216 950-1	MOULDING, Front Door Window Opening Frame Rear (23-23-32)
11	1	2216 950-1	MOULDING, Quarter Window Opening Frame Outside Front (23-23-73)
12	1	2244 376-7	MOULDING, Quarter Window Opening Frame Outside Upper (23-23-73)
13	1	2495 284-5	MOULDING PACKAGE, Rear Window Outside Side (23-23-52)
	6	6001 084	Retainer
14	1	2481 050-1	MOULDING, Roof Panel Outside Rear (23-23-42)
	16	6001 084	Retainer
15	1	2495 279	MOULDING PACKAGE, Rear Window Outside Upper (23-23-52)
	8	6001 084	Retainer
16	1	2495 286	MOULDING PACKAGE, Rear Window Outside Lower (23-23-52)
	5	6001 084	Retainer
17	1	2525 817	MOULDING PACKAGE, Deck Lid Lower (23-23-30)
	6	6001 840	Retainer and Seal
	13	116 000	Nut
18	2	2526 929	LETTER "D", Deck Lid (23-19-114)
	1	2526 930	"O"
	1	2526 931	"G"
	1	2526 932	"E"
	10	9415 250	Nut
	10	6024 708	Seal
19	1	2525 847	MOULDING PACKAGE, Deck Lid Upper (23-23-30)
	7	6001 842	Retainer and Seal
	13	116 000	Nut
20	1	2495 376-7	MOULDING PACKAGE, Quarter Panel Peak (23-23-39)
	16	6001 097	Retainer
	16	---- ---	Nut
21	1	2495 374-5	MOULDING PACKAGE, Quarter Panel Paint Break (Special Equipment) (23-23-39)
	10	6001 443	Retainer
	10	6001 432	Retainer
	10	6023 260	Nut
22	1	2525 996-7	MOULDING PACKAGE, Quarter Panel Rear (23-23-39)
	2	6024 271	Screw
	22	6001 630	Clip
	8	6001 548	Clip
	4	6024 679	Nut
23	1	2495 372-3	MOULDING PACKAGE, Quarter Panel Paint Break to Drain Trough (Special Equipment) (23-23-39)
	2	6023 898	Screw
	2	9415 250	Nut
24	1	2526 976-7	DEFLECTOR, Quarter Panel Wheel Opening Stone (Special Equipment) (23-34-240)
	6	6024 288	Screw and Seal
	2	---- ---	Nut
	2	---- ---	Washer
25	1	2525 982-3	MOULDING PACKAGE, Door Outside (23-23-32)
	22	6001 630	Clip
	2	6001 989	Retainer
	2	446 618	Nut

All Packages Include Attaching Parts

Part Type Code is Indicated in Parentheses

EXTERIOR VIEW - DART L-H 2 DOOR SEDAN

MyMopar.com

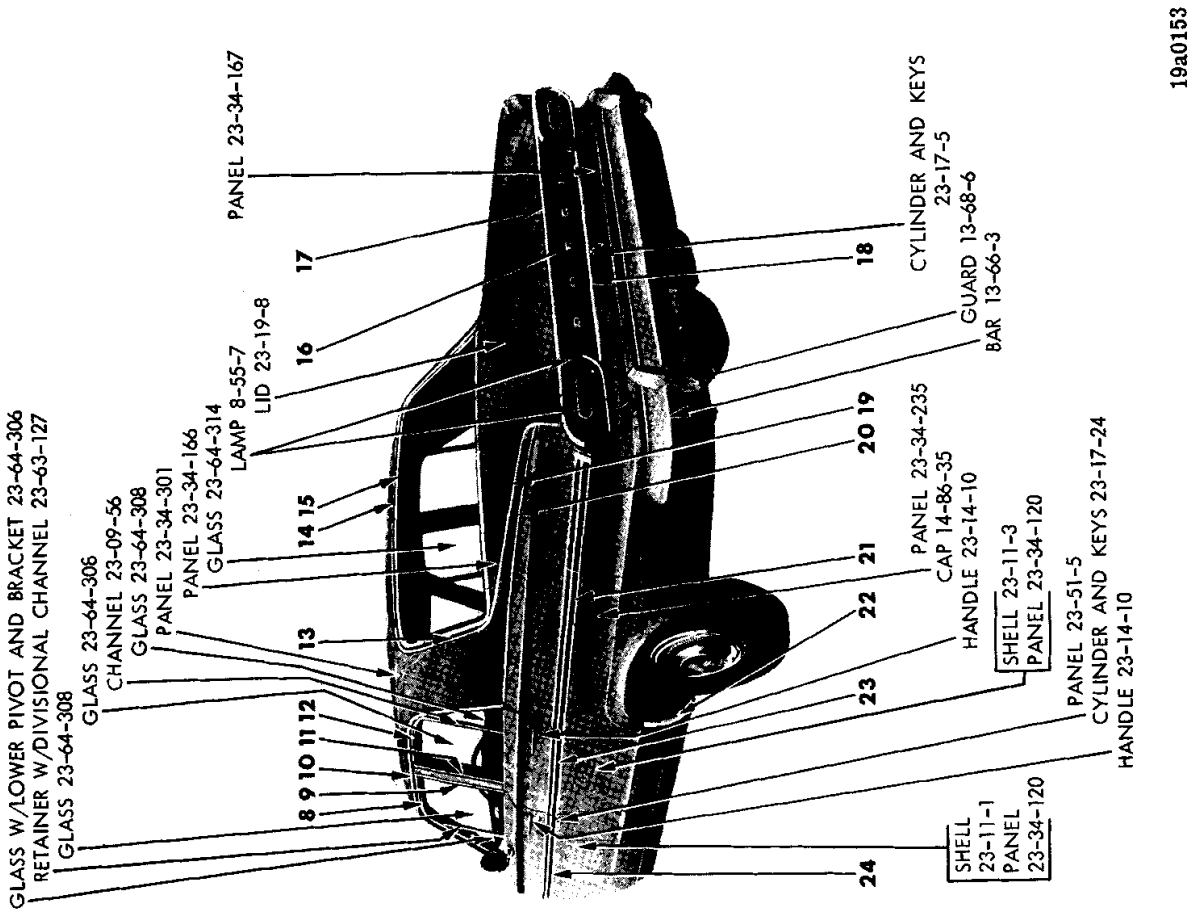

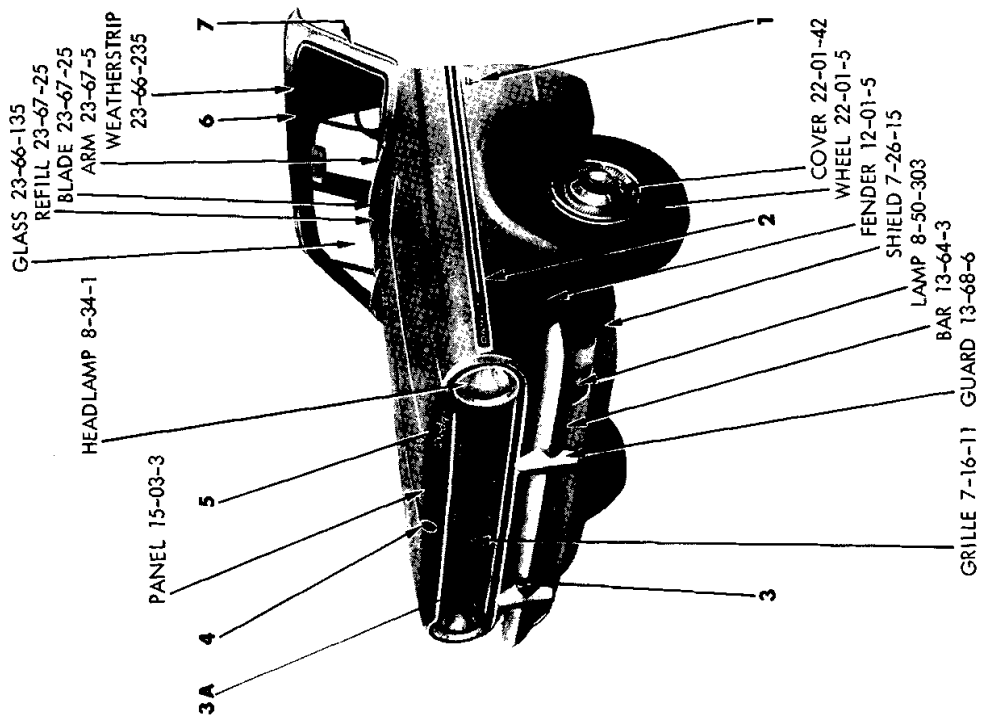

EXTERIOR VIEW - DART L-H 4 DOOR SEDAN

MyMopar.com

REF. NO.	QTY	PART NUMBER	DESCRIPTION
1	2	2524 008	ORNAMENT, Fender Side, V Eight (12-15-21)
	4	6023 260	Nut
2	1	2584 072-3	MOULDING PACKAGE, Fender Side (12-15-2)
	8	6001 630	Retainer
	4	6001 548	Retainer
	4	---- ---	Palnut
	2	6001 788	Retainer
3	1	2584 078-9	MOULDING PACKAGE, Fender Headlamp and Air Shield (12-15-2)
	14	6001 851	Clip and Seal
	14	---- ---	Nut
3A	1	2584 080	MOULDING PACKAGE, Hood Front (15-25-2)
	7	6001 851	Clip
	7	116 000	Nut
4	1	2524 859	MEDALLION, w/Insert, Hood Front (15-06-3)
	1	6000 050	Clip
	2	6025 127	Washer
5	1	2449 715	NAME PLATE, Hood Front (15-06-3)
	4	1839 995	Nut
6	1	2082 278	LOCKINGSTRIP, Windshield Glass Weatherstrip (23-66-239)
7	1	2484 424-5	MOULDING, Roof Side Drain Trough Front (23-59-61)
8	1	2216 946-7	MOULDING, Front Door Window Frame Upper and Front (23-23-32)
9	1	2216 950-1	MOULDING, Front Door Window Frame Rear (23-23-32)
10	1	2255 936-7	MOULDING, Roof Side Drain Trough Rear (23-59-61)
11	1	2216 950-1	MOULDING, Rear Door Window Frame Front (23-23-33)
12	1	2217 014-5	MOULDING, Rear Door Window Frame Upper and Rear (23-23-33)
13	1	2495 284-5	MOULDING PACKAGE, Rear Window Outside Side (23-23-52)
	6	6001 084	Retainer and Screw
14	1	2481 050-1	MOULDING, Roof Panel Outside Rear (23-23-42)
	16	6001 084	Retainer and Screw
15	1	2495 279	MOULDING PACKAGE, Rear Window Outside Upper (23-23-52)
	8	6001 084	Retainer and Screw
16	2	2526 929	LETTER "D", Deck Lid (23-19-114)
	1	2526 930	"O"
	1	2526 931	"G"
	1	2526 932	"E"
	10	6024 708	Seal
	10	9415 250	Nut
17	1	2525 847	MOULDING PACKAGE, Deck Lid Upper (23-23-30)
	7	6001 842	Clip
	7	116 000	Nut
18	1	2525 817	MOULDING PACKAGE, Deck Lid Lower (23-23-30)
	6	6001 840	Clip
	6	116 000	Nut
19	1	2495 376-7	MOULDING PACKAGE, Quarter Panel Peak Rear (23-23-39)
	16	6001 097	Retainer
	16	---- ---	Nut
20	1	2495 408-9	MOULDING PACKAGE, Quarter Panel Paint Break (Special Equipment) (23-23-39)
	10	6001 456	Retainer
	10	6001 432	Retainer
	10	6023 260	Nut
21	1	2525 998-9	MOULDING PACKAGE, Quarter Panel Front (23-23-39)
	2	6024 271	Screw and Sealer
	6	6001 630	Clip
22	1	2526 976-7	DEFLECTOR, Quarter Panel Wheel Opening Stone (23-34-240)
	6	6024 288	Screw
23	1	2584 000-1	MOULDING PACKAGE, Rear Door Outside (23-23-33)
	10	6001 630	Retainer
24	1	2525 984-5	MOULDING PACKAGE, Front Door Outside (23-23-32)
	24	6001 630	Clip
	2	6001 989	Retainer
	2	446 618	Nut

All Packages Include Attaching Parts

Part Type Code is Indicated in Parentheses

EXTERIOR VIEW - DART L-H 4 DOOR SEDAN

MyMopar.com

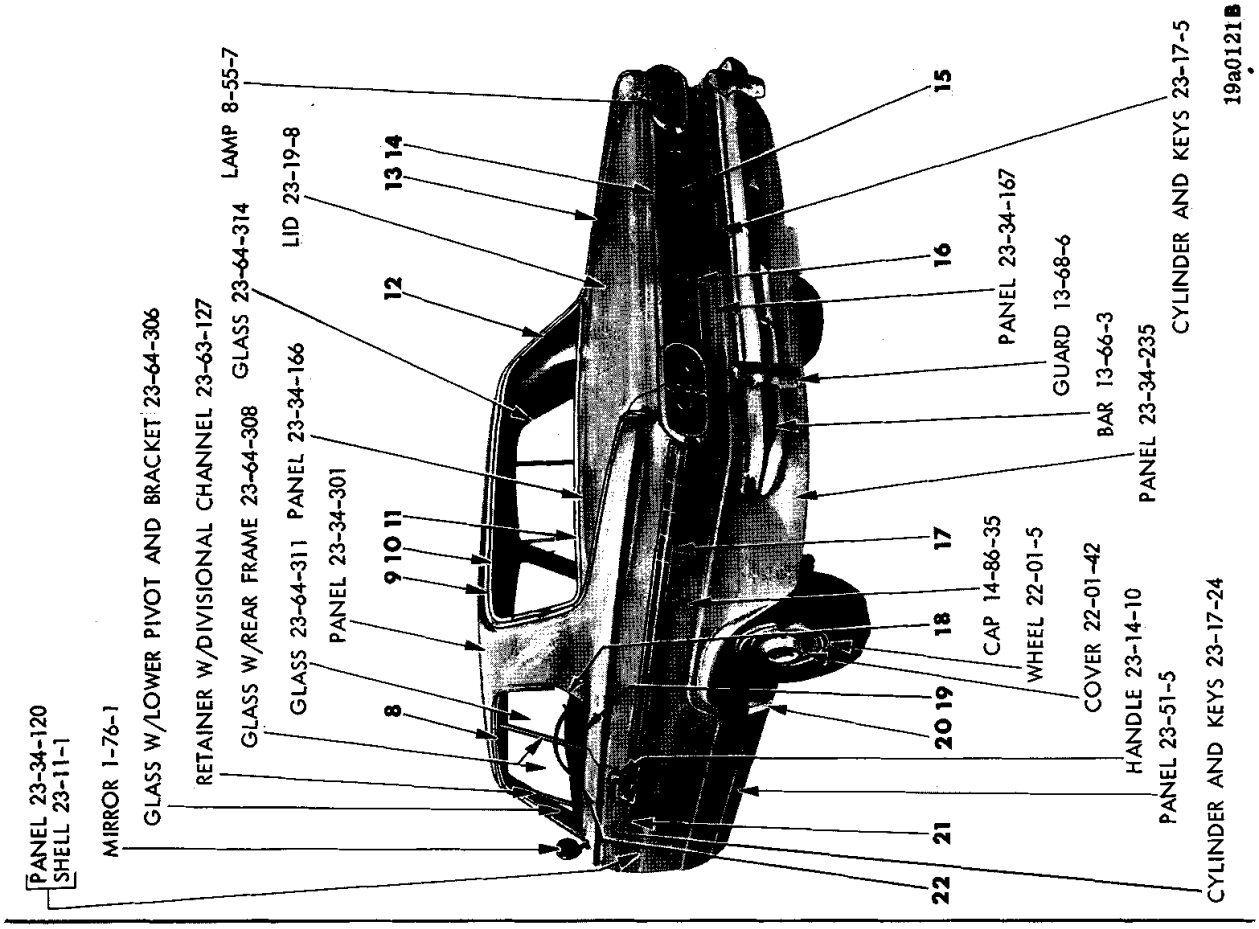

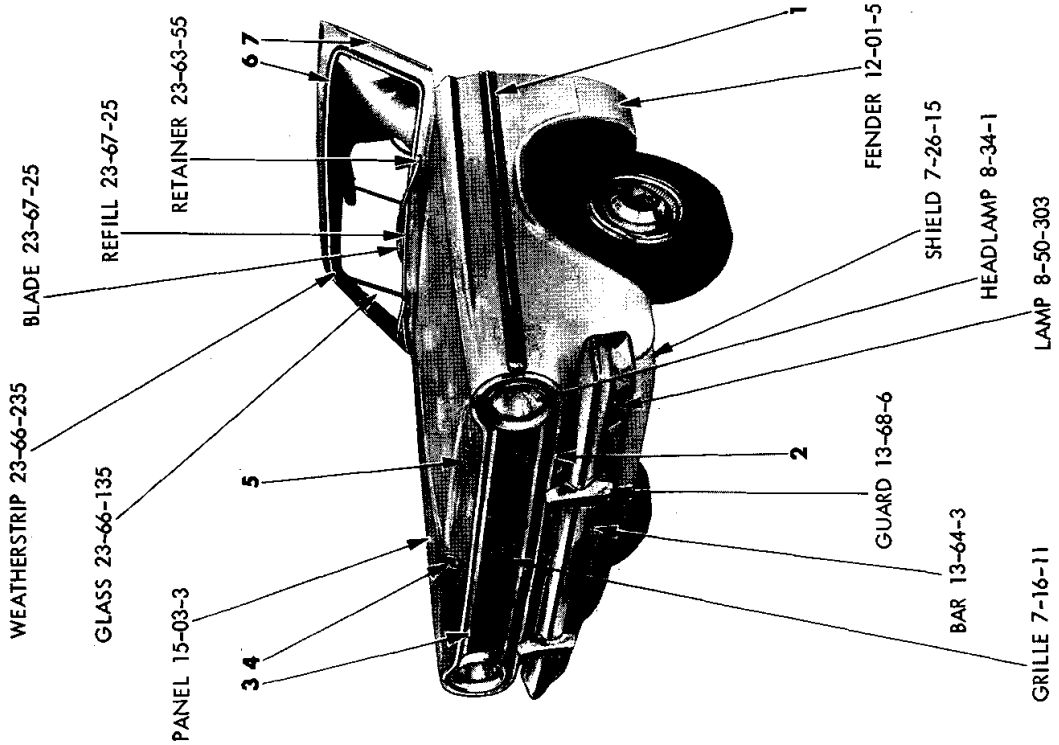

EXTERIOR VIEW - DART L-H 2 DOOR HARDTOP

MyMopar.com

REF. NO.	QTY	PART NUMBER	DESCRIPTION
1	1	2584 072-3	MOULDING PACKAGE, Fender Side (12-15-2)
	8	6001 630	Retainer
	4	6001 548	Retainer
	2	6001 788	Retainer
	4	---- ---	Nut
2	1	2584 078-9	MOULDING PACKAGE, Fender Headlamp and Air Shield (12-15-2)
	14	6001 851	Clip
	14	---- ---	Nut
3	1	2584 080	MOULDING PACKAGE, Hood Front (15-25-2)
	7	6001 851	Clip
	7	116 000	Nut
4	1	2524 859	MEDALLION, w/Insert, Hood Front (15-06-3)
	1	6000 050	Clip
	2	6025 127	Nut
5	1	2449 715	NAME PLATE, Hood Front (15-06-3)
	4	1839 995	Nut
6	1	2082 278	LOCKINGSTRIP, Windshield Glass Weatherstrip (23-66-239)
7	1	2484 424-5	MOULDING, Roof Side Drain Trough Front (23-59-61)
8	1	2422 432-3	MOULDING, Roof Side Drain Trough Rear (23-59-61)
9	1	2481 050-1	MOULDING, Roof Panel Outside Rear (23-23-42)
	16	6001 084	Retainer
10	1	2495 279	MOULDING PACKAGE, Rear Window Outside Upper (23-23-52)
	8	6001 084	Retainer
11	1	2495 286	MOULDING PACKAGE, Rear Window Outside Lower (23-23-52)
	5	6001 084	Retainer
12	1	2495 284-5	MOULDING PACKAGE, Rear Window Outside Side (23-23-52)
	6	6001 084	Retainer
13	1	2495 376-7	MOULDING PACKAGE, Quarter Panel Peak (23-23-39)
	16	6001 097	Retainer
	16	---- ---	Nut
14	1	2525 847	MOULDING PACKAGE, Deck Lid Upper (23-23-30)
	7	6001 842	Clip
	7	116 000	Nut
15	2	2526 929	"D", Deck Lid Name Letter (23-19-114)
	1	2526 930	"O"
	1	2526 931	"G"
	1	2526 932	"E"
	10	6024 708	Seal
	10	9415 250	Nut
16	1	2525 817	MOULDING PACKAGE, Deck Lid Lower (23-23-30)
	6	6001 840	Clip
	6	116 000	Nut
17	1	2525 996-7	MOULDING PACKAGE, Quarter Panel Lower (23-23-39)
	2	6024 271	Screw
	22	6001 630	Clip
	8	6001 548	Clip
	4	6024 679	Nut
18	1	2448 176-7	MOULDING PACKAGE, Quarter Panel Belt Rear (23-23-39)
	2	6024 135	Screw
	2	6024 638	Screw
19	1	2525 582-3	MOULDING PACKAGE, Quarter Panel Belt Front (23-23-39)
	2	6001 490	Clip
	2	6024 271	Screw
20	1	2526 976-7	DEFLECTOR, Quarter Panel Wheel Opening Stone (Special Equipment) (23-34-240)
	2	---- ---	Nut
	2	---- ---	Washer
	6	6024 288	Screw
21	1	2525 982-3	MOULDING PACKAGE, Door (23-23-32)
	22	6001 630	Clip
	2	6001 989	Retainer
	2	446 618	Nut
22	1	2448 430-1	MOULDING PACKAGE, Door Belt (23-23-32)
	10	6001 490	Clip
	2	6001 440	Retainer
	2	9415 312	Nut

All Packages Include Attaching Parts

Part Type Code is Indicated in Parentheses

EXTERIOR VIEW - DART L-H 2 DOOR HARDTOP

MyMopar.com

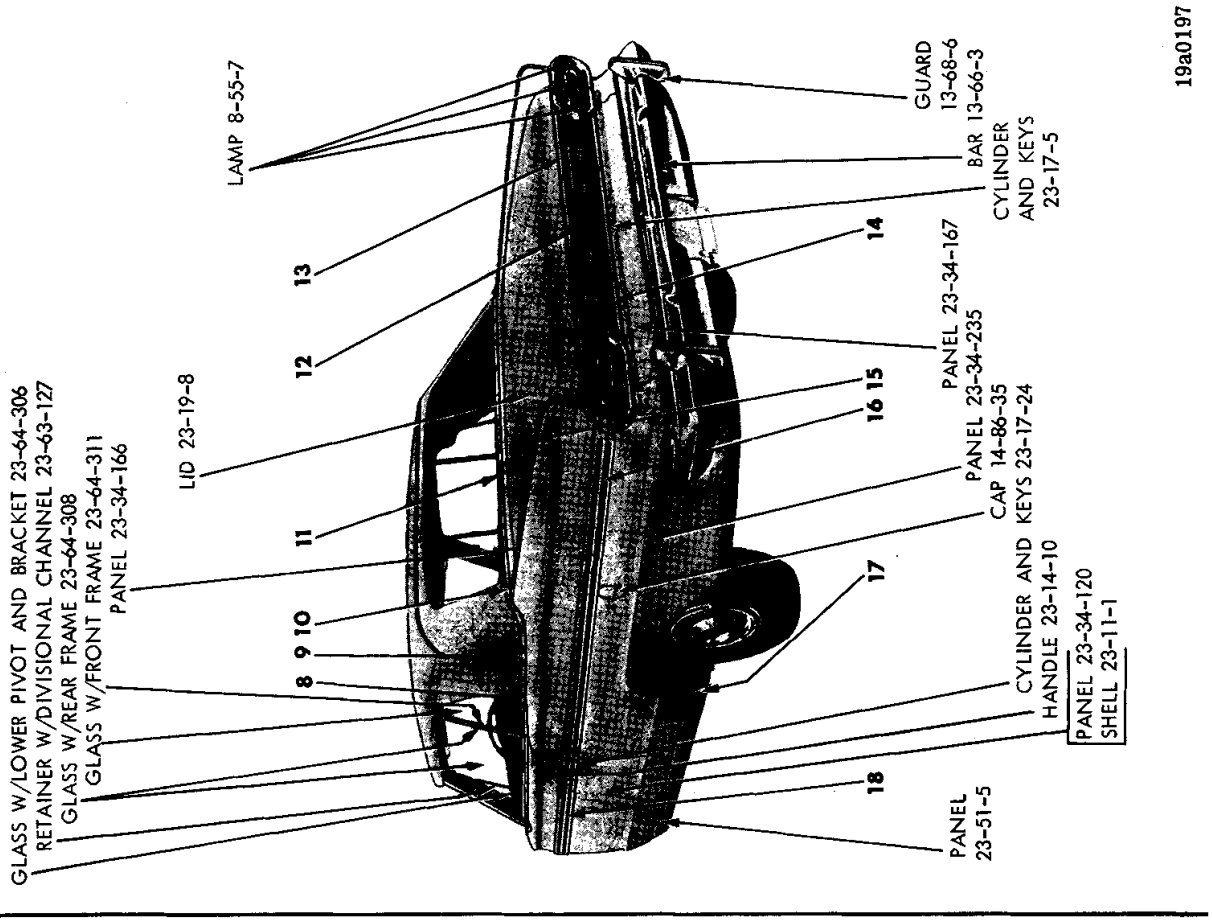

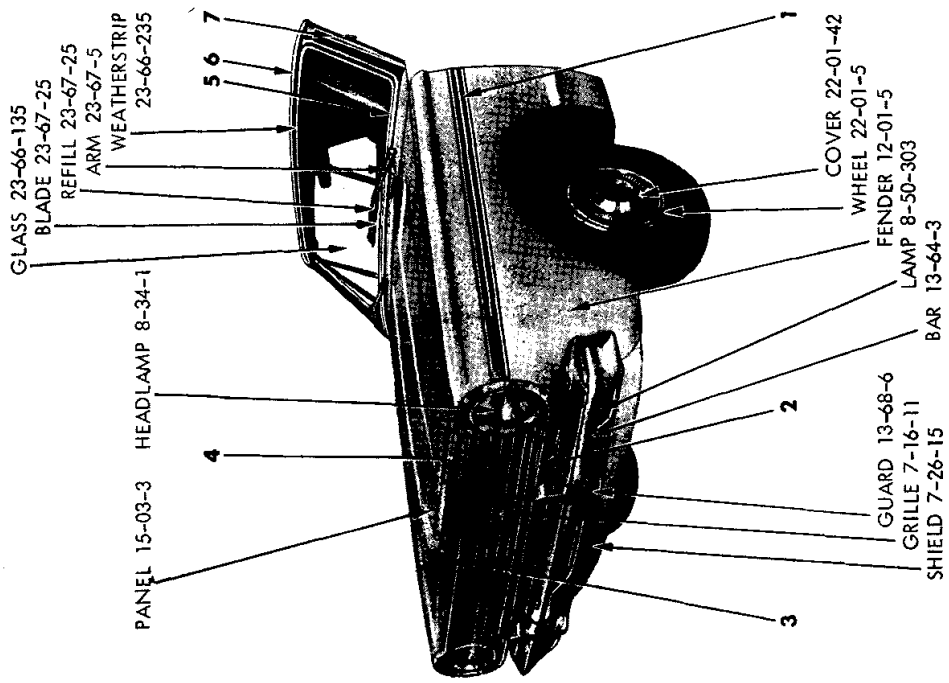

EXTERIOR VIEW - DART L-H CONVERTIBLE COUPE

MyMopar.com

REF. NO.	QTY	PART NUMBER	DESCRIPTION
1	1	2584 072-3	MOULDING PACKAGE, Fender Side (12-15-2)
	8	6001 630	Retainer
	4	6001 548	Retainer
	4	---- ---	Nut
	2	6001 788	Retainer
2	1	2584 078-9	MOULDING PACKAGE, Fender Headlamp and Air Shield (12-15-2)
	14	6001 851	Clip
	14	---- ---	Nut
3	1	2524 859	MEDALLION, w/Insert, Hood Front
	1	6000 050	Clip
	2	6025 127	Washer
4	1	2449 715	NAME PLATE, Hood Front (Dodge) (15-06-3)
	4	1839 995	Nut
5	1	2424 106	MOULDING, Windshield Outside Lower (23-23-65)
	7	6001 524	Clip and Seal
6	1	2422 180-1	MOULDING, Windshield Header Outside Upper (23-23-65)
	7	6024 400	Screw and Sealer
7	1	2484 406-7	MOULDING, Windshield Opening Frame Outside Side (23-23-65)
	8	6024 271	Screw
8	1	2424 170-1	MOULDING, Quarter Outside Belt Front (23-23-39)
	2	6024 472	Fastener
	2	6023 898	Screw
9	1	2422 190-1	MOULDING, Quarter Outside Belt Rear (23-23-39)
	2	6024 472	Fastener
	6	6024 477	Fastener
10	1	2484 104-5	COVER, Quarter Belt to Deck Opening Upper Panel Moulding Joint (23-23-41)
	2	6024 277	Stud Fastener
11	1	2255 948	MOULDING, Deck Opening Upper Panel (23-23-31)
	9	6024 477	Fastener
12	2	2526 929	LETTER "D", Deck Lid (23-19-114)
	1	2526 930	"O"
	1	2526 931	"G"
	1	2526 932	"E"
	10	6024 708	Seal
	10	9415 250	Nut
13	1	2525 847	MOULDING PACKAGE, Deck Lid Upper (23-23-30)
	7	6001 842	Retainer w/Seal
	7	116 000	Nut
14	1	2525 817	MOULDING PACKAGE, Deck Lid Lower (23-23-30)
	6	6001 840	Clip
	6	116 000	Nut
15	1	2495 368	MOULDING PACKAGE, Quarter Panel Peak Rear (23-23-39)
	14	6001 097	Retainer
	16	---- ---	Nut
16	1	2525 996-7	MOULDING PACKAGE, Quarter Panel Rear (23-23-39)
	2	6024 271	Screw
	22	6001 630	Clip
	8	6001 548	Clip
	4	6024 679	Nut
17	1	2526 976-7	DEFLECTOR, Quarter Panel Wheel Opening Stone (23-34-240)
	6	6024 288	Screw
	2	---- ---	Washer
	2	---- ---	Nut
18	1	2525 982-3	MOULDING PACKAGE, Door Outside (23-23-32)
	22	6001 630	Clip
	2	6001 989	Retainer
	2	446 618	Nut

All Packages Include Attaching Parts

Part Type Code is Indicated in Parentheses

EXTERIOR VIEW - DART L-H CONVERTIBLE COUPE

MyMopar.com

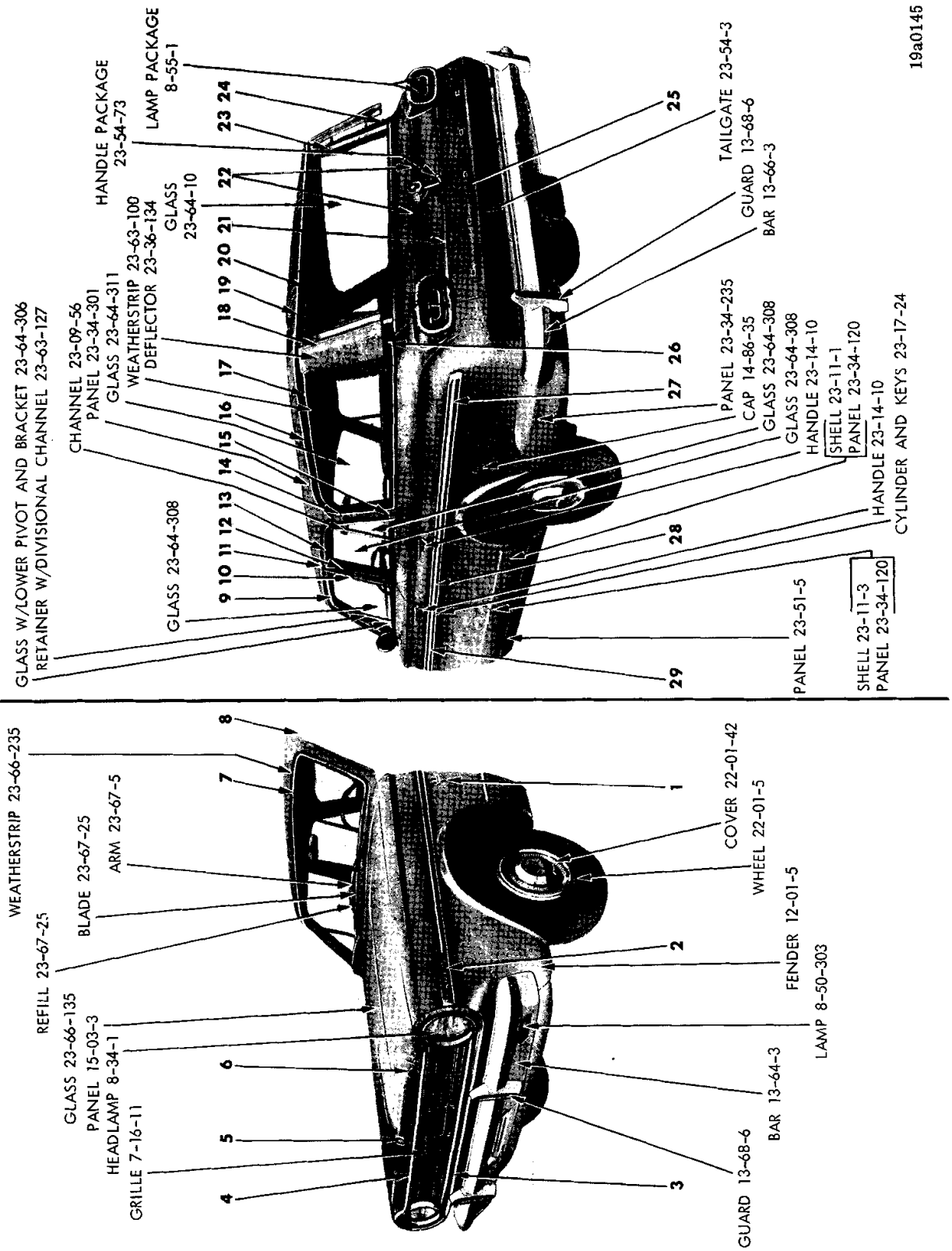

EXTERIOR VIEW - DART L-H STATION WAGON

MyMopar.com

REF. NO.	QTY	PART NUMBER	DESCRIPTION
1	2	2524 008	ORNAMENT, Fender Side, V8 (12-15-21)
	4	6023 260	Nut, Acorn
2	1	2584 072-3	MOULDING PACKAGE, Front Fender Side (12-15-2)
	8	6001 630	Retainer
	4	6001 548	Retainer
	4	---- ---	Palnut
	2	6001 711	Retainer
3	1	2584 078-9	MOULDING PACKAGE, Headlamp and Air Shield (12-15-2)
	8	6001 851	Clip w/Seal
	8	116 000	Nut
4	1	2584 080	MOULDING PACKAGE, Hood Front (15-25-2)
	7	6001 851	Clip
	7	116 000	Nut
5	1	2524 859	MEDALLION, w/Insert, Hood Front (15-06-3)
	1	6000 050	Clip
	2	6025 127	Nut
6	1	2449 715	NAME PLATE, Hood Front (15-06-3)
	4	1839 995	Nut
7	1	2082 278	LOCKINGSTRIP, Windshield Glass Weatherstrip (23-66-239)
8	1	2484 424-5	MOULDING, Roof Side Drain Trough Front (23-59-61)
9	1	2216 946-7	MOULDING, Front Door Window Opening Frame Upper and Front (23-23-32)
10	1	2216 950-1	MOULDING, Front Door Window Opening Frame Rear (23-23-32)
11	1	2255 936-7	MOULDING, Roof Side Drain Trough Rear (23-59-61)
12	1	2216 950-1	MOULDING, Rear Door Window Opening Frame Front (23-23-33)
13	1	2217 014-5	MOULDING, Rear Door Window Opening Frame Upper and Rear (23-23-33)
14	2	2424 625	CAP, Quarter Window Locking-strip Upper Front (23-63-117)
15	1	2525 994-5	MOULDING PACKAGE, Roof Side Extension (23-23-42)
16	1	2422 650-1	MOULDING, Roof Side Drain Trough (23-59-61)
17	2	2243 513	LOCKINGSTRIP, Quarter Window Glass Weatherstrip (23-63-110)
18	1	2484 756-7	MOULDING, Rear Upper Pillar Air Deflector (23-23-60)
19	1	2484 162-3	MOULDING, Roof Rear Drain Trough (23-59-61)
20	1	2448 401	MOULDING PACKAGE, Roof Tailgate Opening (23-23-60)
	5	6001 451	Clip
21	1	2525 816	MOULDING PACKAGE, Tailgate Lower (23-23-61)
	6	6006 412	Clip and Seal
	6	116 000	Nut
22	1	2525 818-9	MOULDING PACKAGE, Tailgate Upper (Manual) (23-23-61)
	1	2584 474-5	MOULDING PACKAGE, Tailgate Upper (Electric)(23-23-61)
	6	6006 412	Clip and Seal
	6	116 000	Nut
23	1	2421 579-80	MOULDING PACKAGE, Rear Upper Pillar Outside Finish (23-23-60)
	4	6001 077	Clip
	2	6024 271	Clip
	2	9418 471	Screw
24	1	2421 577-8	MOULDING PACKAGE, Rear Upper Pillar Outside (23-23-60)
	6	6001 076	Clip
	4	6024 271	Clip
25	2	2417 677	LETTER "D", Tailgate Outside Panel (23-54-11)
	1	2417 678	"O"
	1	2417 680	"G"
	1	2417 681	"E"
	5	9415 250	Nut
26	2	2424 626	CAP, Quarter Window Locking-strip Lower Rear (23-63-117)
27	1	2584 002-3	MOULDING PACKAGE, Quarter Panel (23-23-39)
	2	6024 271	Screw
	12	6001 716	Retainer and Seal
	8	6001 548	Retainer and Stud
	4	6024 679	Nut
28	1	2584 000-1	MOULDING PACKAGE, Rear Door Outside (23-23-33)
	10	6001 630	Retainer
29	1	2525 984-5	MOULDING PACKAGE, Front Door Outside (23-23-32)
	24	6001 630	Clip
	2	6001 989	Retainer
	2	446 618	Nut

All Packages Include Attaching Parts

Part Type Code is Indicated in Parentheses

EXTERIOR VIEW - DART L-H STATION WAGON

MyMopar.com

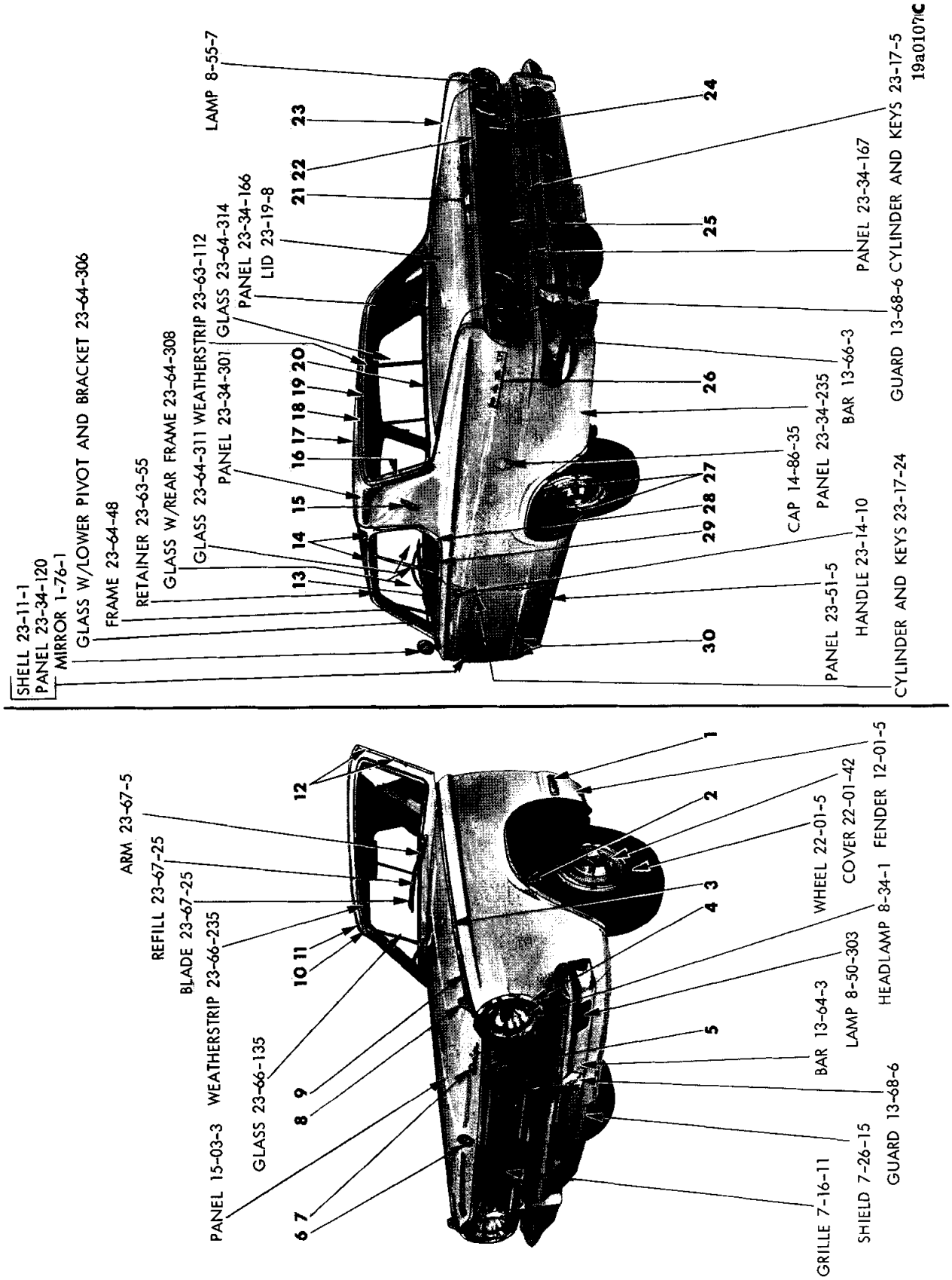

EXTERIOR VIEW - DART L-P 2 DOOR HARDTOP

MyMopar.com

REF. NO.	QTY	PART NUMBER	DESCRIPTION
1	1	2526 234-5	ORNAMENT, Fender Lower Exhaust Port (12-15-21)
	4	6025 828	Screw
	4	6024 817	Nut
2	1	2449 732-3	MOULDING, Fender Wheel Opening (12-15-2)
	16	6024 271	Screw
3	1	2584 076-7	MOULDING PACKAGE, Fender Top (12-15-2)
	10	6001 639	Retainer
4	1	2584 078-9	MOULDING PACKAGE, Fender Headlamp and Air Shield (12-15-2)
	14	6001 851	Clip
	14	---- ---	Nut
5	1	2584 080	MOULDING PACKAGE, Hood Front (15-25-2)
	7	6001 851	Clip
	7	116 000	Nut
6	1	2524 859	MEDALLION, w/Insert, Hood Front (15-06-3)
	1	6000 050	Clip
	2	6025 127	Washer
7	1	2449 715	NAME PLATE, Hood Front (15-06-3)
	4	1839 995	Nut
8	2	2449 727	ORNAMENT, Fender Top (12-15-21)
	2	9418 419	Screw
9	1	2524 048-9	BASE, Fender Top Ornament (12-15-23)
	4	---- ---	Seal
	4	116 000	Nut
	2	6025 461	Seal
	2	6010 008	Nut
10	1	2082 278	LOCKINGSTRIP, Windshield Glass Weatherstrip (23-66-239)
11	1	2584 438	MOULDING PACKAGE, Roof Outside Front (23-23-42)
	9	6023 975	Screw (w/Vinyl Roof)
	6	6001 764	Retainer w/Screw (w/Vinyl Roof)
	6	6001 762	Retainer w/Screw (w/o Vinyl Roof)
	2	6001 766	Retainer
	2	6000 637	Nut
12	1	2584 434-5	MOULDING PACKAGE, Roof Side Front to Body Front Pillar (23-23-42)
	10	6023 247	Screw
13	1	2584 526-7	MOULDING PACKAGE, Door Belt (23-23-32)
	2	6001 785	Retainer
	2	6001 831	Retainer
	10	6001 638	Retainer
	4	446 618	Nut
14	1	2584 436-7	MOULDING PACKAGE, Roof Side Rear to Roof Side Intermediate (23-23-42)
	10	6023 247	Screw
	16	6023 938	Screw
15	2	2526 236	MEDALLION, Quarter Outside (GT) (23-34-334)
	4	---- ---	Washer
	4	9411 618	Nut
16	1	2495 284-5	MOULDING PACKAGE, Rear Window Outside Side (23-23-52)
	6	6001 084	Retainer
17	1	2584 439	MOULDING PACKAGE, Roof Outside Top Rear (23-23-42)
	9	6023 975	Screw (w/Vinyl Roof)
	6	6001 764	Retainer w/Screw (w/Vinyl Roof)
	6	6001 762	Retainer w/Screw (w/o Vinyl Roof)
	2	6001 766	Retainer
	2	6000 637	Nut
18	1	2481 050-1	MOULDING, Roof Panel Outside Rear (23-23-42)
	16	6001 084	Retainer
19	1	2495 279	MOULDING PACKAGE, Rear Window Outside Upper (23-23-52)
	8	6001 084	Retainer
20	1	2495 286	MOULDING PACKAGE, Rear Window Outside Lower (23-23-52)
	5	6001 084	Retainer
21	2	2417 825	"D", Deck Lid Name Letter (23-19-114)
	1	2417 826	"O"
	1	2417 828	"G"
	1	2417 829	"E"
	10	6024 708	Seal
	10	6013 114	Nut
22	1	2525 847	MOULDING PACKAGE, Deck Lid Upper (23-23-30)
	7	6001 842	Clip
	7	116 000	Nut
23	1	2495 376-7	MOULDING PACKAGE, Quarter Panel Peak (23-23-39)
	16	6001 097	Retainer
	16	---- ---	Nut
24	1	2483 970	PANEL, Deck Lid Finish (23-23-30)
	3	---- ---	Screw
25	1	2525 817	MOULDING PACKAGE, Deck Lid Lower (23-23-30)
	6	6001 840	Clip
	6	116 000	Nut
26	2	2526 250	LETTER "D", Quarter Panel (23-34-238)
	2	2526 251	"A"
	2	2526 252	"R"
	2	2526 253	"T"
	16	6023 260	Nut
27	1	2528 602-3	DEFLECTOR, Quarter Panel Wheelhouse Opening Stone (23-34-240)
	18	6024 271	Screw
	2	---- ---	Washer
	2	6023 185	Washer
28	1	2526 228-9	MOULDING, Quarter Panel Belt Rear (23-23-39)
	2	6023 681	Screw
29	1	2525 950-1	MOULDING PACKAGE, Quarter Panel Belt Front (23-23-39)
	4	6001 638	Retainer
30	2	2526 234-5	ORNAMENT, Door Lower Exhaust Port (23-11-23)
	8	6025 828	Screw
	8	6024 814	Nut

2	180 070	Nut	
2	6025 527	Washer	

All Packages Include Attaching Parts

Part Type Code is Indicated in Parentheses

EXTERIOR VIEW - DART L-P 2 DOOR HARDTOP

MyMopar.com

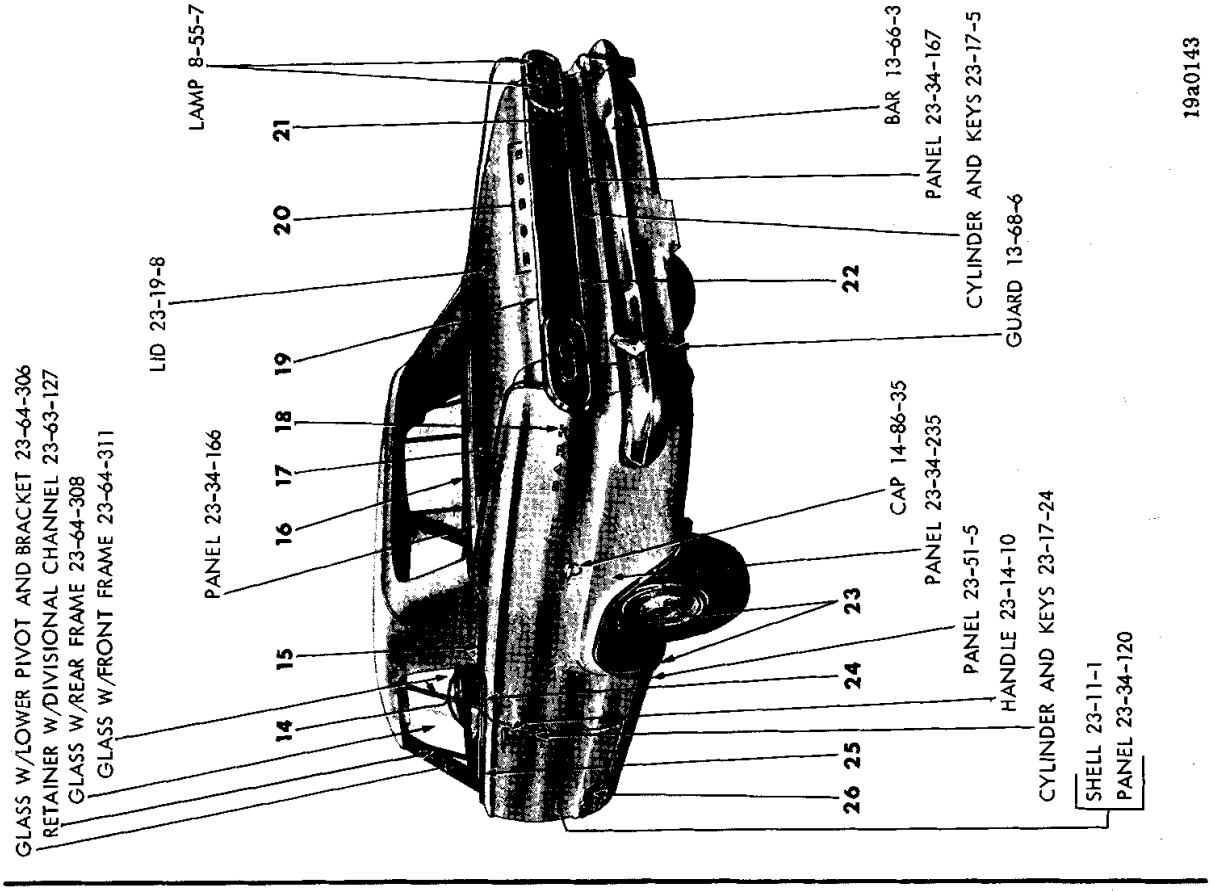

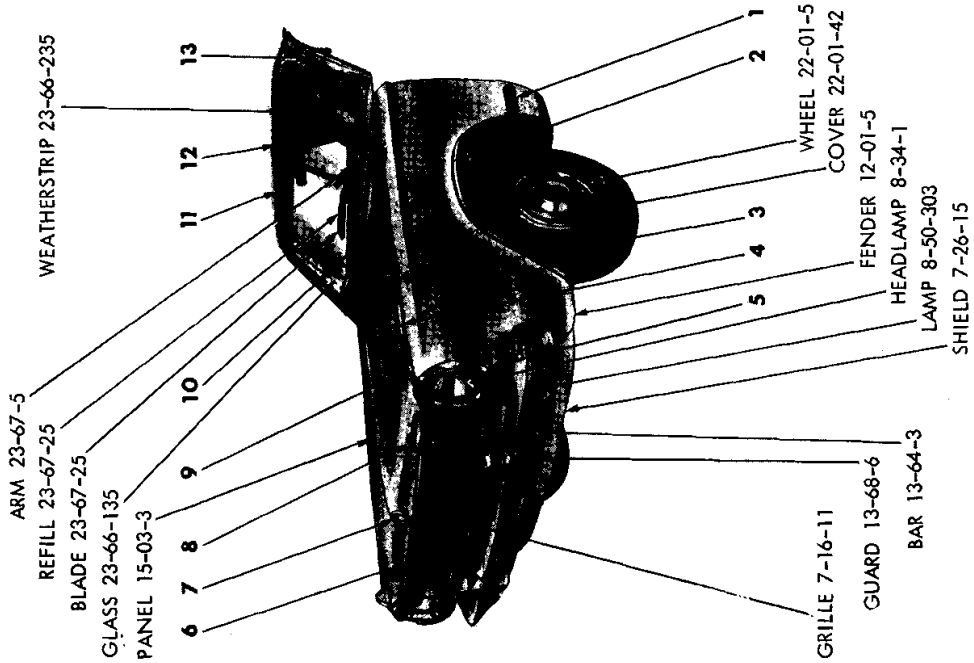

EXTERIOR VIEW - DART L-P CONVERTIBLE COUPE

MyMopar.com

REF. NO.	QTY	PART NUMBER	DESCRIPTION
1	1	2526 234-5	ORNAMENT, Fender Lower Exhaust Port (12-15-21)
	4	6025 828	Screw
	4	6024 817	Nut
2	1	2449 732-3	MOULDING, Fender Wheel Opening (12-15-2)
	16	6024 271	Screw
3	1	2584 076-7	MOULDING PACKAGE, Fender Top (12-15-2)
	10	6001 639	Retainer
4	1	2524 048-9	BASE, Fender Top Ornament (12-15-23)
	4	---- ---	Seal
	2	6025 461	Seal
	4	116 000	Nut
	2	6010 008	Nut
5	1	2584 078-9	MOULDING PACKAGE, Fender Headlamp and Air Shield (12-15-2)
	14	6001 851	Clip
	14	---- ---	Nut
6	1	2584 080	MOULDING, Hood Front (15-25-2)
	7	6001 851	Clip
	7	116 000	Nut
7	1	2524 859	MEDALLION, w/Insert, Hood Front (15-06-3)
	1	6000 050	Clip
	2	6025 127	Washer
8	1	2449 715	NAME PLATE, Hood Front (15-06-3)
	4	1839 995	Nut
9	2	2449 727	ORNAMENT, Fender Top (12-15-21)
	2	9418 419	Nut
10	1	2424 106	MOULDING, Windshield Outside Lower (23-23-65)
	7	6001 524	Clip and Seal
11	1	2422 180-1	MOULDING, Windshield Header Outside Upper (23-23-65)
	7	6024 400	Screw and Sealer
12	1	2082 278	LOCKINGSTRIP, Windshield Glass Weatherstrip (23-66-239)
13	1	2484 406-7	MOULDING, Windshield Opening Frame Outside Side (23-23-65)
	8	6024 271	Screw
14	1	2526 230-1	MOULDING, Quarter Panel Belt Intermediate (23-23-39)
	2	---- ---	Screw
	2	6024 472	Fastener
15	1	2422 190-1	MOULDING, Quarter Outside Belt Rear (23-23-39)
	2	6024 472	Fastener
	6	6024 477	Fastener
16	1	2255 948	MOULDING, Deck Opening Upper Panel (23-23-31)
	9	6024 477	Fastener
17	2	2495 368	MOULDING PACKAGE, Quarter Outside Peak Rear (23-23-39)
	16	6001 097	Retainer
	16	---- ---	Nut
	1	2495 754-5	MOULDING PACKAGE, Quarter Panel Peak Front (23-23-39)
	4	6001 097	Retainer
	16	---- ---	Nut
18	2	2526 250	LETTER "D", Quarter Panel (23-34-238)
	1	2526 251	"A"
	1	2526 252	"R"
	1	2526 253	"T"
	16	6023 260	Nut
19	1	2525 847	MOULDING PACKAGE, Deck Lid Upper (23-23-30)
	7	6001 842	Clip
	7	116 000	Nut
20	2	2526 929	LETTER "D", Deck Lid (23-19-114)
	1	2526 930	"O"
	1	2526 931	"G"
	1	2526 932	"E"
	10	6024 708	Seal
	10	9415 250	Nut
21	1	2483 970	PANEL, Deck Lid Finish (23-23-30)
	3	---- ---	Screw
22	1	2525 817	MOULDING PACKAGE, Deck Lid Lower (23-23-30)
	6	6001 840	Clip
	6	116 000	Nut
23	1	2528 602-3	DEFLECTOR, Quarter Panel Wheelhouse Opening Stone (23-34-240)
	18	6024 271	Screw
	2	180 078	Nut
	2	---- ---	Washer
	2	6025 527	Washer
	2	6023 185	Washer
24	1	2525 950-1	MOULDING PACKAGE, Quarter Panel Belt Front (23-23-39)
	4	6001 638	Retainer
25	1	2584 526-7	MOULDING PACKAGE, Door Belt (23-23-32)
	2	6001 785	Retainer & Stud
	10	6001 638	Retainer & Seal
	2	6001 831	Retainer & Seal
	4	446 618	Nut
26	2	2526 234-5	ORNAMENT, Front Door Lower Exhaust Port (23-11-23)
	8	6024 817	Nut
	8	6025 828	Screw

All Packages Include Attaching Parts

Part Type Code is Indicated in Parentheses

EXTERIOR VIEW - DART L-P CONVERTIBLE COUPE

MyMopar.com

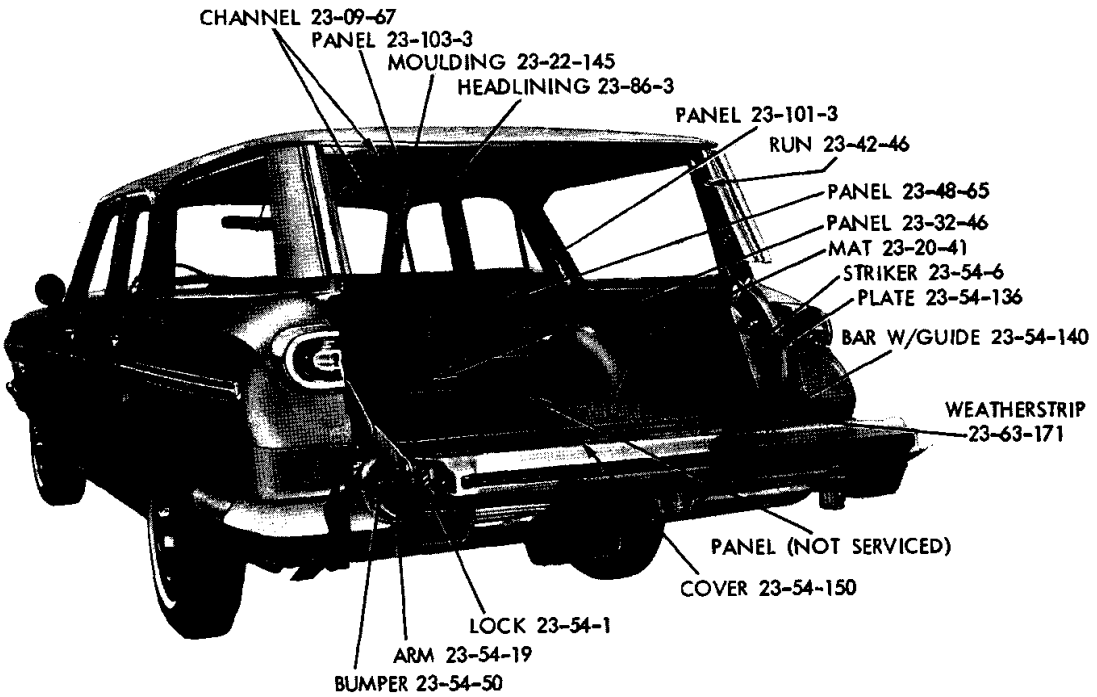

19a0239

REAR INTERIOR VIEW - DART L-H STATION WAGON

NOTES

MyMopar.com

NOTES

MyMopar.com

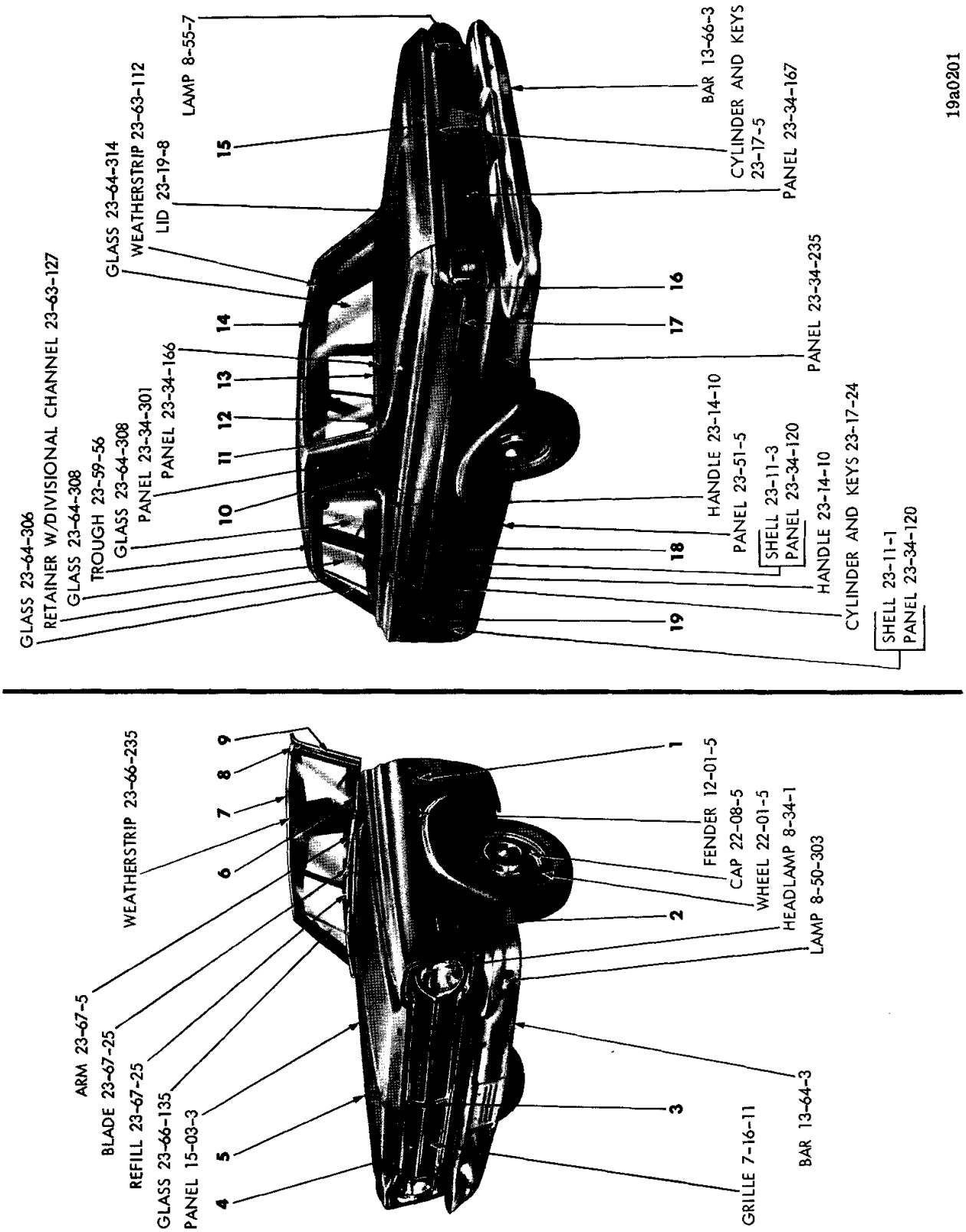

EXTERIOR VIEW - BELVEDERE R-L 4 DOOR SEDAN

MyMopar.com

REF. NO.	QTY	PART NUMBER	DESCRIPTION
1	2	2449 866	NAME PLATE, Fender Side, Belvedere I (12-15-21)
	10	1839 995	Nut
2	2	2578 630	ORNAMENT, Fender Side, V8 (12-15-21)
	4	6023 685	Nut
3	1	2584 534	MEDALLION PACKAGE, Radiator Grille (7-17-1)
	4	445 160	Nut
4	1	2528 323	LETTER, Hood Front Name, "P" (15-06-16)
	1	2528 324	"L"
	1	2528 325	"Y"
	1	2528 326	"M"
	1	2528 327	"O"
	1	2528 328	"U"
	1	2528 329	"T"
	1	2528 330	"H"
5	1	2449 861	ORNAMENT, Hood Top (15-03-18)
6	1	2218 595	MOULDING, Windshield Outside Finish Lower (23-23-65)
	10	6001 537	Retainer and Screw
7	1	2218 594	MOULDING, Windshield Outside Upper (23-23-65)
	8	6001 537	Retainer and Screw
8	1	2491 014-5	MOULDING, Windshield Outside Side Upper Extension (23-23-65)
9	1	2218 596-7	MOULDING, Windshield Outside Finish Side (23-23-65)
	6	6023 247	Screw
10	1	2448 150-1	MOULDING PACKAGE, Quarter Outside Panel Paint Break (Spec. Equip.) (23-23-39)
	6	6001 030	Retainer
	6	152 259	Nut
11	1	2480 918-9	MOULDING, Rear Window Outside Side (23-23-52)
	4	6023 693	Screw
12	1	2484 380-1	MOULDING, Rear Window Outside Lower Corner (23-23-52)
	2	6023 693	Screw
13	1	2480 922	MOULDING, Rear Window Outside Lower (23-23-52)
	6	6023 693	Screw
14	1	2495 269	MOULDING PACKAGE, Rear Window Outside Upper (23-23-52)
	6	6001 525	Retainer and Screw
15	1	2528 323	LETTER "P", Deck Lid Name (23-19-114)
	1	2528 324	"L"
	1	2528 325	"Y"
	1	2528 326	"M"
	1	2528 327	"O"
	1	2528 328	"U"
	1	2528 329	"T"
	1	2528 330	"H"
	16	152 259	Nut
16	1	2528 586-7	MOULDING, Quarter Outside Rear Primed (23-23-39)
	2	---- ---	Seal
	2	2529 991	Insulator
	6	152 272	Nut
17	1	2584 014-5	MOULDING PACKAGE, Quarter Outside (23-23-39)
	8	6001 621	Clip
	10	6000 709	Clip
	10	9417 621	Nut
18	1	2584 018-9	MOULDING PACKAGE, Rear Door Outside (23-23-33)
	4	6001 615	Retainer
	4	9417 621	Nut
	8	6001 621	Clip
19	1	2584 010-1	MOULDING PACKAGE, Front Door Outside (23-23-32)
	2	6000 709	Clip
	4	9417 621	Nut
	2	6001 615	Retainer
	8	6001 621	Clip

All Packages Include Attaching Parts

Part Type Code is Indicated in Parentheses

EXTERIOR VIEW - BELVEDERE R-L 4 DOOR SEDAN

MyMopar.com

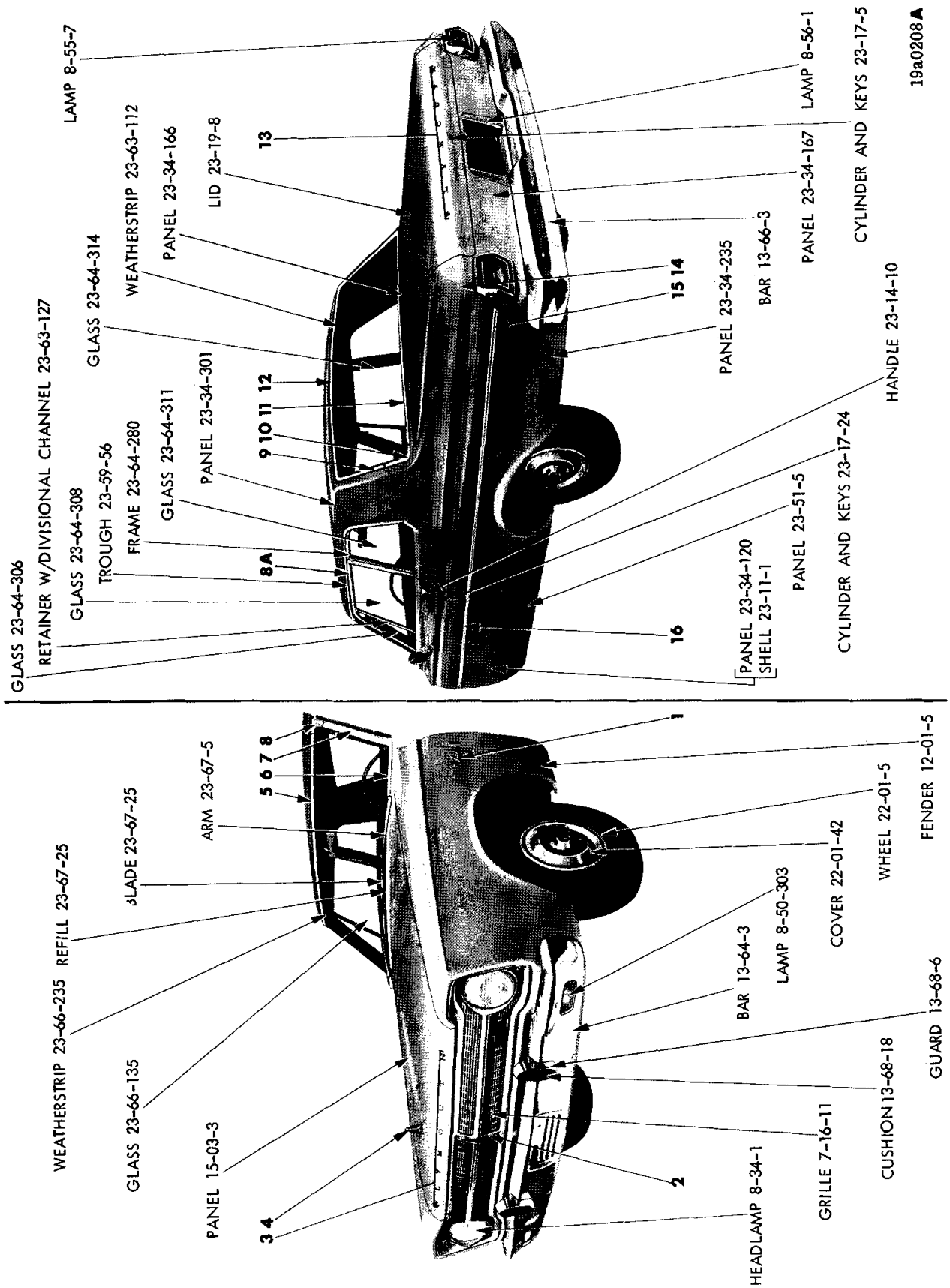

EXTERIOR VIEW - BELVEDERE R-L 2 DOOR SEDAN

MyMopar.com

REF. NO.	QTY	PART NUMBER	DESCRIPTION
1	2	2449 866	NAME PLATE, Fender Side, Belvedere I (12-15-21)
	10	1839 995	Nut
2	1	2584 534	MEDALLION PACKAGE, Radiator Grille (7-17-1)
	4	445 160	Nut
3	1	2528 323	LETTER, Hood Front Name, "P" (15-06-16)
	1	2528 324	"L"
	1	2528 325	"Y"
	1	2528 326	"M"
	1	2528 327	"O"
	1	2528 328	"U"
	1	2528 329	"T"
	1	2528 330	"H"
	16	6000 616	Nut, w/Retainer
4	1	2524 200	ORNAMENT, Hood Top (15-03-18)
	1	---- ---	Stud
5	1	2218 594	MOULDING, Windshield Outside Upper (23-23-65)
	8	6001 537	Retainer and Screw
6	1	2218 595	MOULDING, Windshield Outside Finish Lower (23-23-65)
	10	6001 537	Retainer and Screw
7	1	2218 596-7	MOULDING, Windshield Outside Finish Side (23-23-65)
	6	6023 247	Screw
8	1	2491 014-5	MOULDING, Windshield Outside Side Upper Extension (23-23-65)
8A	1	2483 436-7	MOULDING, Roof Side Drain Trough (23-59-61)
9	1	2480 918-9	MOULDING, Rear Window Outside Side (23-23-52)
	4	6023 693	Screw
10	1	2484 380-1	MOULDING, Rear Window Outside Lower Corner (23-23-52)
	2	6023 693	Screw
11	1	2480 922	MOULDING, Rear Window Outside Lower (23-23-52)
	6	6023 693	Screw
12	1	2495 269	MOULDING PACKAGE, Rear Window Outside Upper (23-23-52)
	6	6001 525	Retainer and Screw
13	1	2528 323	LETTER "P", Deck Lid Name (23-19-114)
	1	2528 324	"L"
	1	2528 325	"Y"
	1	2528 326	"M"
	1	2528 327	"O"
	1	2528 328	"U"
	1	2528 329	"T"
	1	2528 330	"H"
	16	152 259	Nut
14	1	2528 586-7	MOULDING, Quarter Outside Rear Prime (23-23-39)
	2	2529 991	Insulator
	2	---- ---	Seal
	2	152 272	Nut
15	1	2584 012-3	MOULDING PACKAGE, Quarter Outside (23-23-39)
	8	6001 621	Clip
	10	6000 709	Clip
	10	9417 621	Nut
16	1	2584 008-9	MOULDING PACKAGE, Door Outside (23-23-32)
	2	6000 709	Clip
	2	9417 621	Nut
	10	6001 621	Clip
	2	6001 622	Retainer and Seal
	2	---- ---	Screw

All Packages Include Attaching Parts

Part Type Code is Indicated in Parentheses

EXTERIOR VIEW - BELVEDERE R-L 2 DOOR SEDAN

MyMopar.com

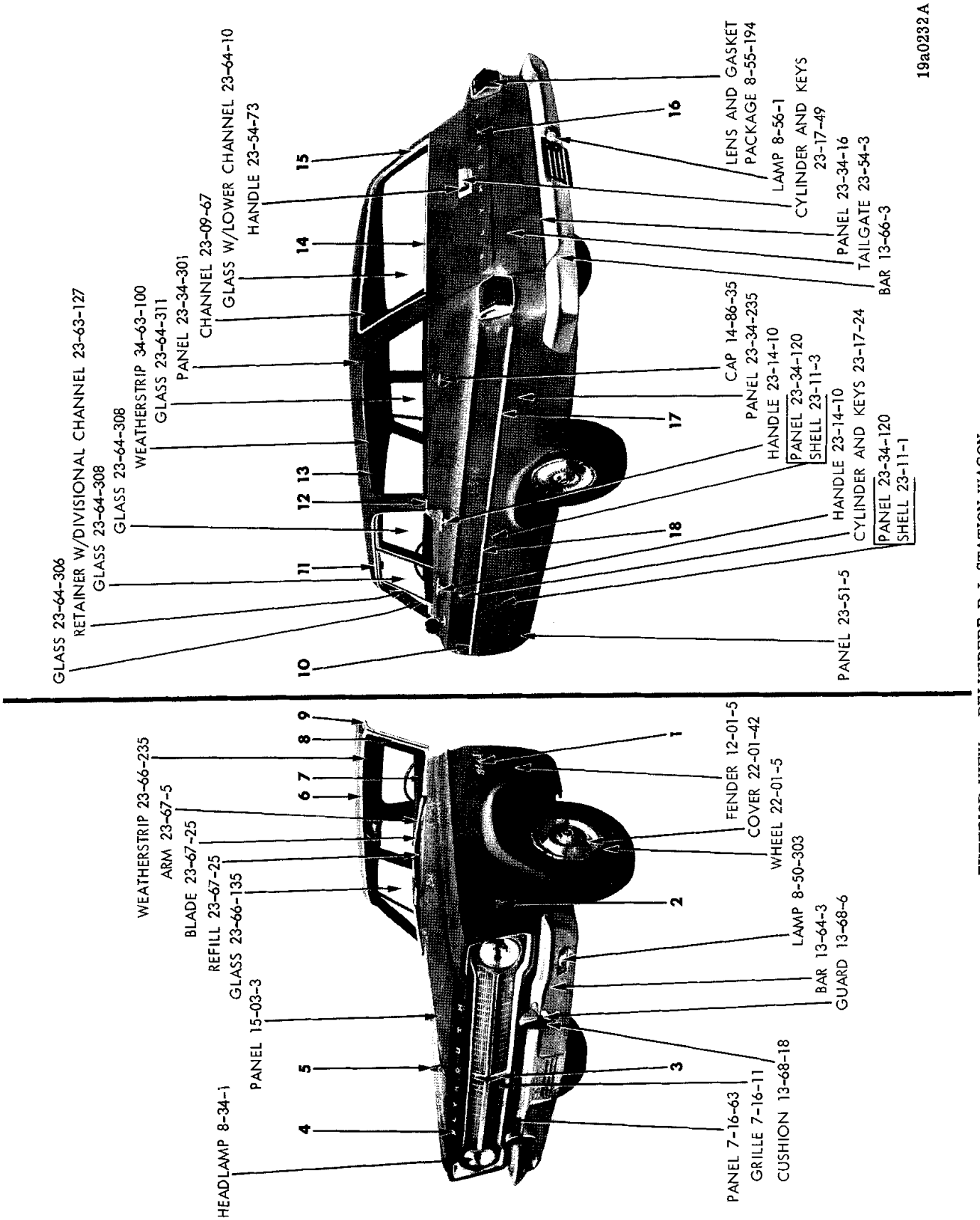

EXTERIOR VIEW - BELVEDERE R-L STATION WAGON

MyMopar.com

REF. NO.	QTY	PART NUMBER	DESCRIPTION
1	2	2449 866	NAME PLATE, Fender Side, Belvedere I (12-15-21)
	10	1839 995	Nut
2	2	2578 630	ORNAMENT, Fender Side, V8 (12-15-21)
	4	6023 685	Nut
3	1	2578 776	MEDALLION, Radiator Grille (7-17-1)
4	1	2528 323	LETTER, Hood Front Name, "P" (15-06-16)
	1	2528 324	"L"
	1	2528 325	"Y"
	1	2528 326	"M"
	1	2528 327	"O"
	1	2528 328	"U"
	1	2528 329	"T"
	1	2528 330	"H"
	16	6000 616	Nut, w/Retainer
5	1	2524 200	ORNAMENT, Hood Top (15-03-18)
	1	---- ---	Stud
6	1	2218 594	MOULDING, Windshield Outside Upper (23-23-65)
	8	6001 537	Retainer
7	1	2218 595	MOULDING, Windshield Outside Finish Lower (23-23-65)
	10	6001 537	Retainer
8	1	2218 596-7	MOULDING, Windshield Outside Finish Side (23-23-65)
	6	6023 247	Screw
9	1	2491 014-5	MOULDING, Windshield Outside Side Upper Extension (23-23-65)
10	1	2584 010-1	MOULDING PACKAGE, Front Door Outside (23-23-32)
	2	6000 709	Clip
	4	9417 621	Nut
	2	6001 615	Retainer
	8	6001 621	Clip
11	1	2483 436-7	MOULDING, Roof Drain Trough Side (23-59-61)
12	1	2299 374	MOULDING PACKAGE, Quarter Outside Belt Paint Break Right (Spec. Equip.)(23-23-39)
	1	2299 399	Left (Spec. Equip.)(23-23-39)
	4	6001 071	Clip
13	2	2422 471	LOCKINGSTRIP, Quarter Window Glass Weatherstrip (Mylar) (23-63-110)
	2	2255 027	(Rubber)
14	1	2448 488	MOULDING PACKAGE, Tailgate Outside Panel Belt (23-23-61)
	5	6001 435	Clip
	2	6024 564	Screw
15	1	2480 976-7	MOULDING, Rear Upper Pillar Outside (23-23-60)
	8	9417 732	Screw
16	1	2528 323	LETTER "P", Tailgate Outside (23-54-11)
	1	2528 324	"L"
	1	2528 325	"Y"
	1	2528 326	"M"
	1	2528 327	"O"
	1	2528 328	"U"
	1	2528 329	"T"
	1	2528 330	"H"
	15	152 259	Nut
	1	6025 286	Nut
17	1	2584 016-7	MOULDING PACKAGE, Quarter Outside (23-23-39)
	2	9417 621	Nut
	2	6000 709	Clip
	16	6001 621	Clip
18	1	2584 018-9	MOULDING PACKAGE, Rear Door Outside (23-23-33)
	4	6001 615	Retainer
	4	9417 621	Nut
	8	6001 621	Clip

All Packages Include Attaching Parts

Part Type Code is Indicated in Parentheses

EXTERIOR VIEW - BELVEDERE R-L STATION WAGON

MyMopar.com

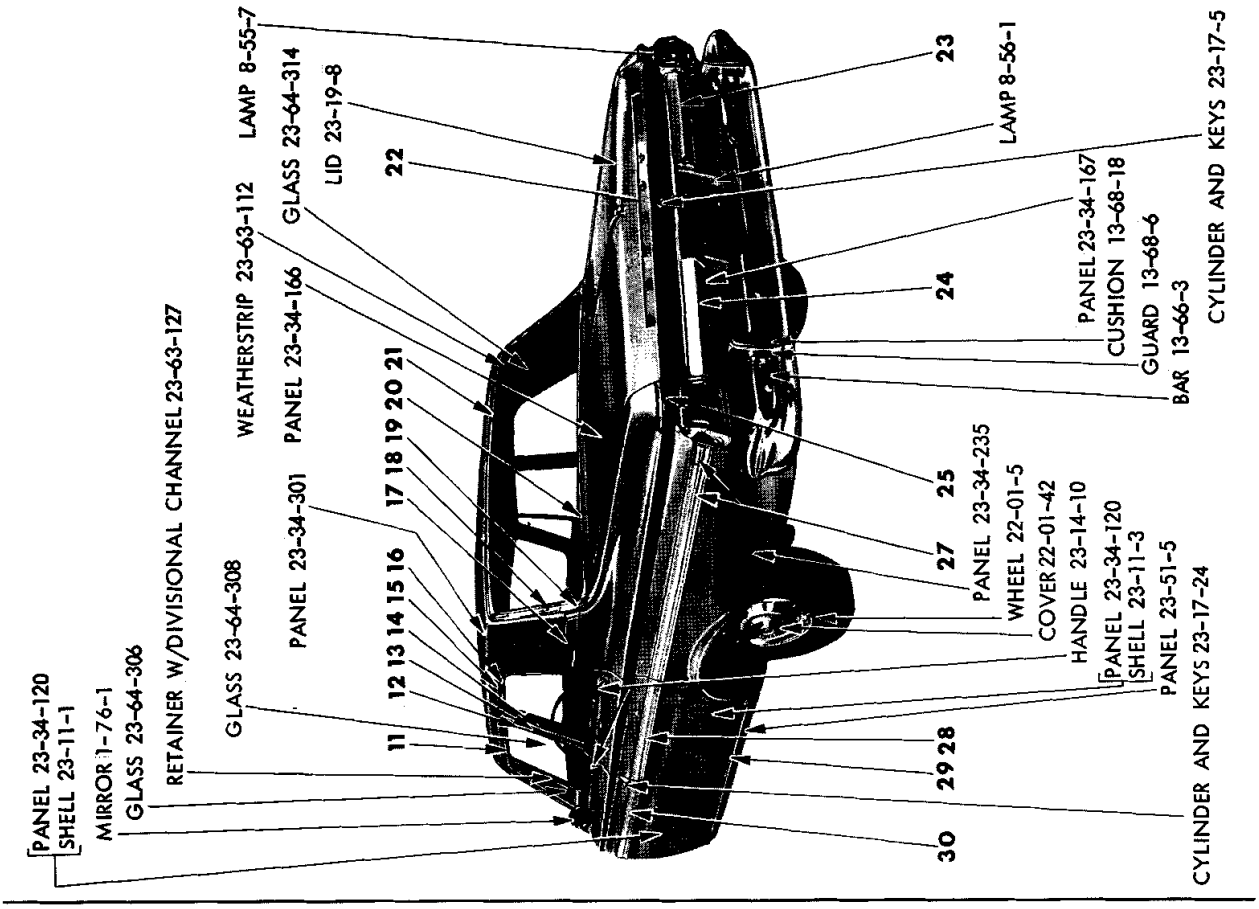

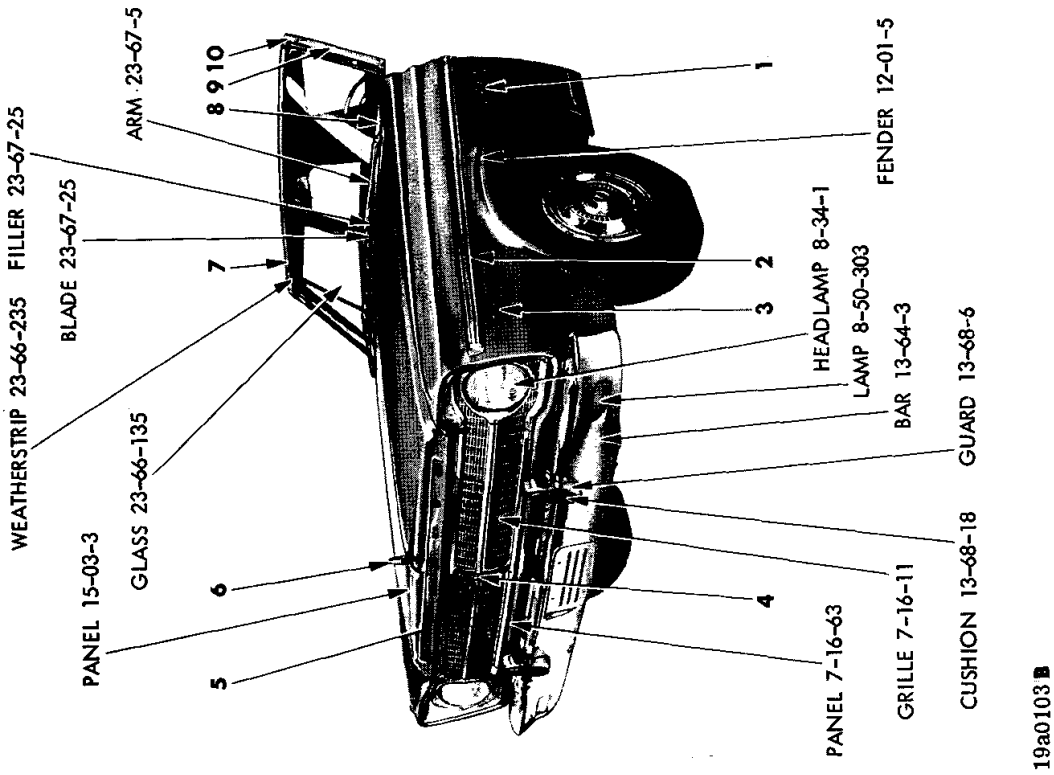

EXTERIOR VIEW - BELVEDERE R-H 4 DOOR SEDAN

MyMopar.com

REF. NO.	QTY	PART NUMBER	DESCRIPTION
1	2	2578 627	NAME PLATE, Fender Side, Belvedere II (12-15-21)
	10	1839 995	Nut
2	1	2525 840-1	MOULDING PACKAGE, Fender Side, Red (12-15-2)
	1	2525 842-3	White
	1	2525 838-9	Black
	2	6001 686	Retainer
	8	6001 630	Retainer
	6	6001 728	Retainer
	6	---- ---	Nut
3	2	2578 630	ORNAMENT, Fender Side, V8 (12-15-21)
	4	---- ---	Nut
4	1	2584 534	MEDALLION PACKAGE, Radiator Grille (7-17-1)
	4	---- ---	Nut 4 445 160 Nut
5	1	2528 323	LETTER, Hood Front Name, "P" (15-06-16)
	1	2528 324	"L"
	1	2528 325	"Y"
	1	2528 326	"M"
	1	2528 327	"O"
	1	2528 328	"U"
	1	2528 329	"T"
	1	2528 330	"H"
	16	6000 616	Nut, w/Retainer
6	1	2449 861	ORNAMENT, Hood Top (15-03-18)
7	1	2218 594	MOULDING, Windshield Outside Upper (23-23-65)
	8	6001 537	Retainer and Screw
8	1	2218 595	MOULDING, Windshield Outside Finish Lower (23-23-65)
	10	6001 537	Retainer and Screw
9	1	2218 596-7	MOULDING, Windshield Outside Finish Side (23-23-65)
	6	6023 247	Screw
10	1	2491 016-7	MOULDING, Windshield Outside Side Upper Extension (23-23-65)
	6	6024 271	Screw
11	1	2218 444-5	MOULDING, Front Door Window Frame Upper (23-23-32)
12	1	2167 998-9	MOULDING, Front Door Window Frame Rear (23-23-32)
13	1	2216 356-7	PANEL, Center Pillar Finish (23-23-16)
	4	6022 890	Screw
14	1	2167 998-9	MOULDING, Rear Door Window Frame Front (23-23-33)
15	1	2483 436-7	MOULDING, Roof Drain Trough Side (23-59-61)
16	1	2216 036-7	MOULDING, Rear Door Window Frame Upper (23-23-33)
17	1	2584 020-1	MOULDING PACKAGE, Quarter Panel Belt (23-23-39)
	4	6024 716	Seal
	4	6001 624	Retainer
18	1	2480 918-9	MOULDING, Rear Window Outside Side (23-23-52)
	4	6023 693	Screw
19	1	2484 380-1	MOULDING, Rear Window Outside Lower Corner (23-23-52)
	2	6023 693	Screw
20	1	2480 922	MOULDING, Rear Window Outside Lower (23-23-52)
	6	6023 693	Screw
21	1	2495 269	MOULDING PACKAGE, Rear Window Outside Upper (23-23-52)
	6	6001 525	Retainer and Screw
22	1	2528 323	"P", Deck Lid Letter (23-19-114)
	1	2528 324	"L"
	1	2528 325	"Y"
	1	2528 326	"M"
	1	2528 327	"O"
	1	2528 328	"U"
	1	2528 329	"T"
	1	2528 330	"H"
	16	152 259	Nut
23	1	2573 818	PANEL, Deck Lower Panel Finish, Right (23-23-28)
	6	6001 430	Retainer
	6	6024 705	Seal
	6	6024 679	Nut
24	1	2573 827	PANEL, Deck Lower Panel Finish, Left (23-23-28)
	6	6001 430	Retainer
	6	6024 705	Seal
	6	6024 679	Nut
25	1	2528 586-7	MOULDING, Quarter Panel Upper Rear (23-23-39)
	2	2529 991	Insulator
	2	---- ---	Seal
	2	152 272	Nut
27	1	2584 044-5	MOULDING PACKAGE, Quarter Panel Lower, w/End, Red (23-23-39)
	1	2584 046-7	White
	1	2584 048-9	Black
	4	6001 630	Retainer
	2	6001 728	Screw
	10	6024 679	Nut
	2	6024 711	Washer
28	1	2584 056-7	MOULDING PACKAGE, Rear Door Lower, Red (23-23-33)
	1	2584 058-9	White
	1	2584 060-1	Black
	8	6001 630	Retainer
	2	6001 629	Retainer
	4	9417 621	Nut
	1	6001 755	Retainer
29	2	2584 476	MOULDING PACKAGE, Body Side Sill (23-23-2)
	2	6025 187	Screw
	18	6001 580	Retainer
30	1	2584 032-3	MOULDING PACKAGE, Front Door Lower, Red (23-23-32)
	1	2584 034-5	White
	1	2584 036-7	Black
	8	6001 630	Retainer
	4	6001 755	Retainer
	2	9417 621	Nut

All Packages Include Attaching Parts

Part Type Code is Indicated in Parentheses

EXTERIOR VIEW - BELVEDERE R-H 4 DOOR SEDAN

MyMopar.com

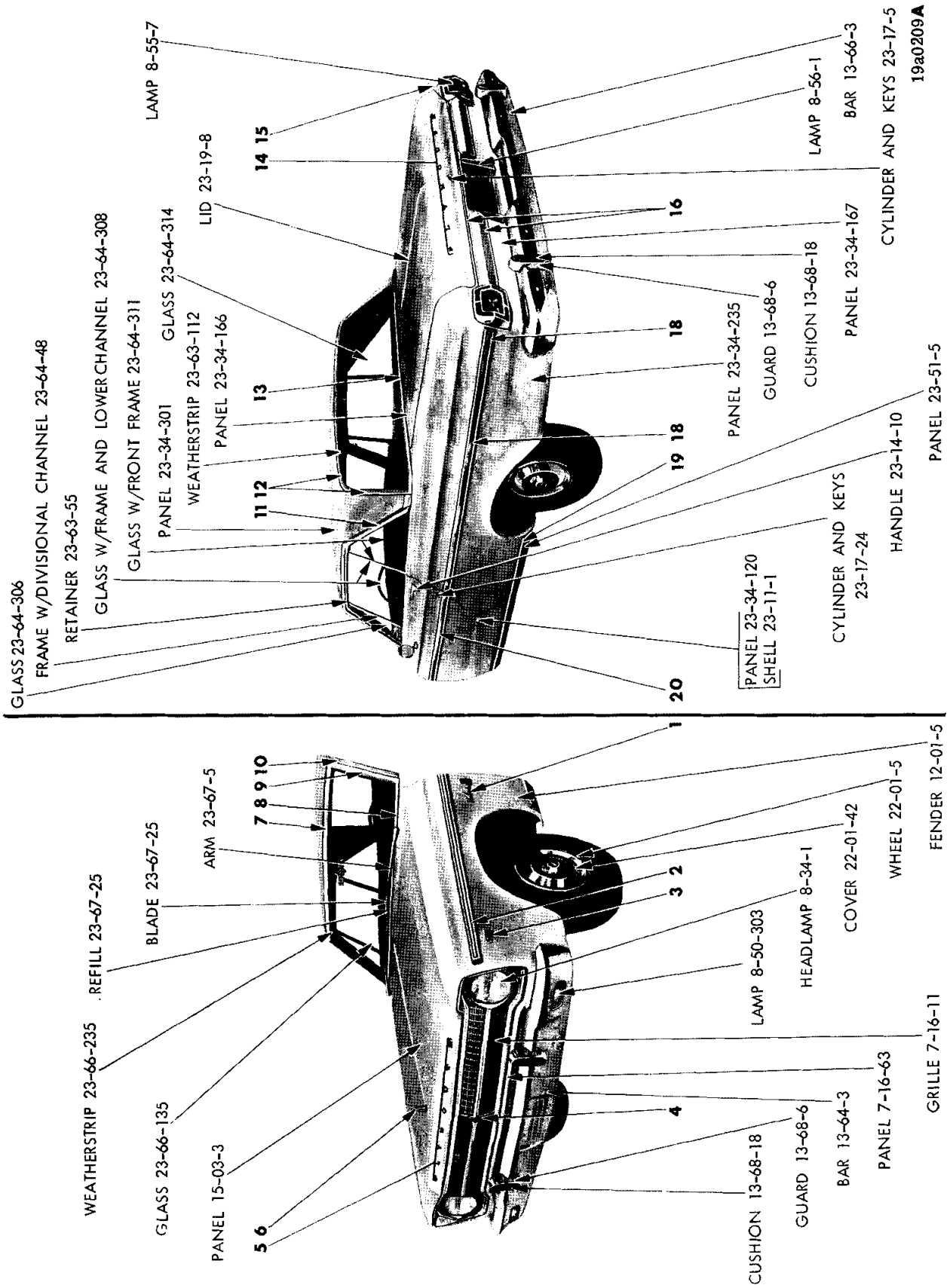

EXTERIOR VIEW - BELVEDERE R-H 2 DOOR HARDTOP

MyMopar.com

REF. NO.	QTY	PART NUMBER	DESCRIPTION
1	2	2578 627	NAME PLATE, Fender Side (12-15-21)
	10	1839 995	Nut
2	1	2525 840-1	MOULDING PACKAGE, Fender Side, Red (12-15-2)
	1	2525 842-3	White
	1	2525 838-9	Black
	2	6001 686	Retainer
	8	6001 630	Retainer
	6	6001 728	Retainer 6 ---- --- Nut
3	2	2578 630	ORNAMENT, Fender Side, V8 (12-15-21)
	4	6023 685	Nut
4	1	2584 534	MEDALLION PACKAGE, Radiator Grille (7-17-1)
	4	445 160	Nut
5	1	2528 323	LETTER "P", Hood Front Name (15-06-16)
	1	2528 324	"L"
	1	2528 325	"Y"
	1	2528 326	"M"
	1	2528 327	"O"
	1	2528 328	"U"
	1	2528 329	"T"
	1	2528 330	"H"
	16	6000 616	Nut, w/Retainer
6	1	2524 200	ORNAMENT, Hood Top (15-03-18)
7	1	2218 594	MOULDING, Windshield Outside Upper (23-23-65)
	8	6001 537	Retainer and Screw
8	1	2218 595	MOULDING, Windshield Outside Finish Lower (23-23-65)
	10	6001 537	Retainer and Screw
9	1	2218 596-7	MOULDING, Windshield Outside Finish Side (23-23-65)
	6	6023 247	Screw
10	1	2492 712-3	MOULDING, Windshield Outside Side Upper Extension (23-23-65)
11	1	2525 556-7	MOULDING and RETAINER PACKAGE, Roof Side Drain Trough (23-59-61)
	6	6024 271	Screw
	2	6024 718	Seal
	2	446 059	Nut
12	1	2495 276-7	MOULDING PACKAGE, Rear Window Outside Upper and Side (23-23-52)
	14	6001 084	Retainer and Screw
13	1	2495 274-5	MOULDING PACKAGE, Rear Window Outside Lower (23-23-52)
	12	6001 084	Retainer and Screw
14	1	2528 323	LETTER "P", Deck Lid Name (23-19-114)
	1	2528 324	"L"
	1	2528 325	"Y"
	1	2528 326	"M"
	1	2528 327	"O"
	1	2528 328	"U"
	1	2528 329	"T"
	1	2528 330	"H"
	16	152 259	Nut
15	1	2528 586-7	MOULDING, Quarter Outside Rear Prime (23-23-39)
	2	2529 991	Insulator
	2	---- ---	Seal
	2	152 272	Nut
16	1	2573 818	PANEL and TAPPING PLATE, Deck Lower Finish, Right (23-23-28)
	6	6024 679	Nut
	6	6024 705	Seal
	6	6001 430	Retainer
	2	1839 995	Nut
	2	---- ---	Retainer
	1	6000 050	Clip
	1	2573 827	PANEL, Deck Lower Finish, Left (23-23-28)
	6	6024 679	Nut
	6	6024 705	Seal
	6	6001 430	Retainer
18	1	2584 050-1	MOULDING and CAP PACKAGE, Quarter Outside, Red (23-23-39)
	1	2584 052-3	White
	1	2584 054-5	Black
	12	6001 630	Retainer and Stud
	2	6024 271	Screw
	8	6024 679	Nut
	8	6001 728	Retainer
	2	6024 679	Nut
	★	6024 711	Washer
19	2	2584 476	MOULDING PACKAGE, Body Side Sill Outside (23-23-2)
	18	6001 580	Retainer
	2	6025 187	Screw
20	1	2584 026-7	MOULDING PACKAGE, Front Door Outside, Red (23-23-32)
	1	2584 028-9	White
	1	2584 030-1	Black
	10	6001 630	Retainer and Stud
	2	---- ---	Screw
	2	6001 743	Retainer
	2	6001 755	Retainer
	2	9417 621	Nut

All Packages Include Attaching Parts

Part Type Code is Indicated in Parentheses

EXTERIOR VIEW - BELVEDERE R-H 2 DOOR HARDTOP

MyMopar.com

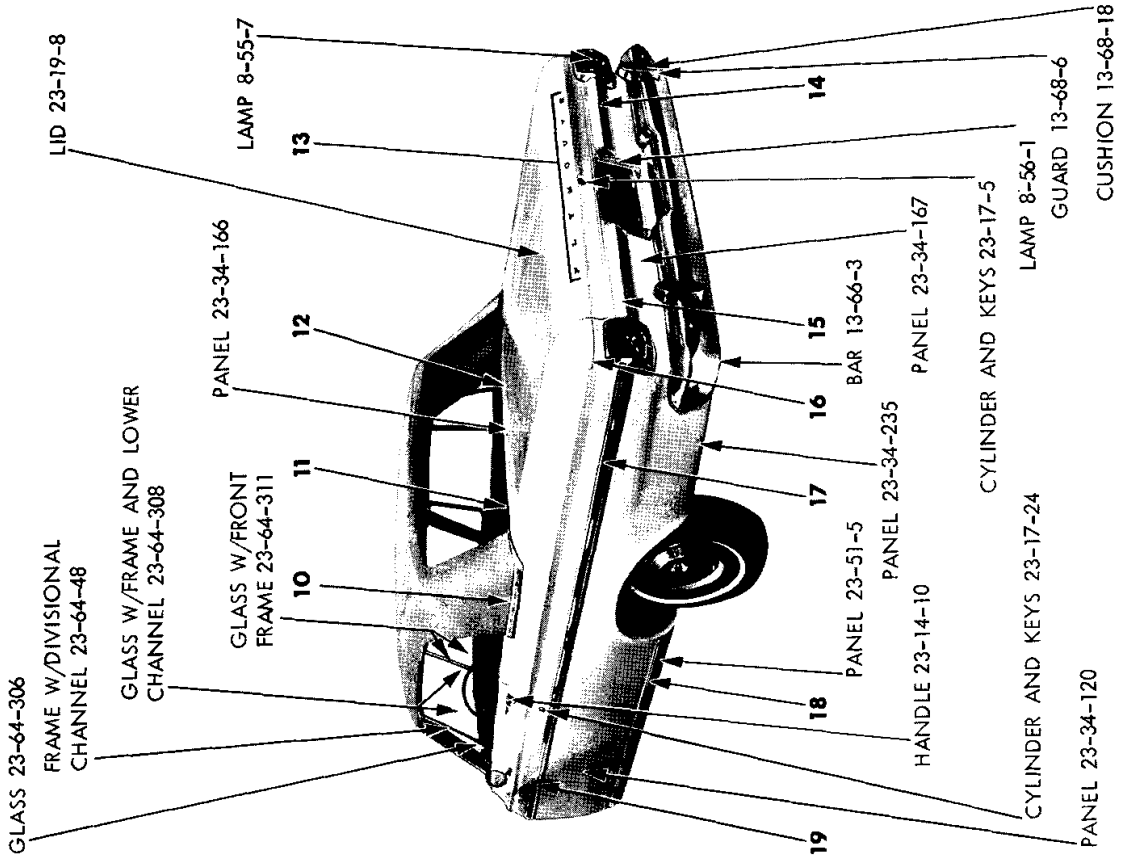

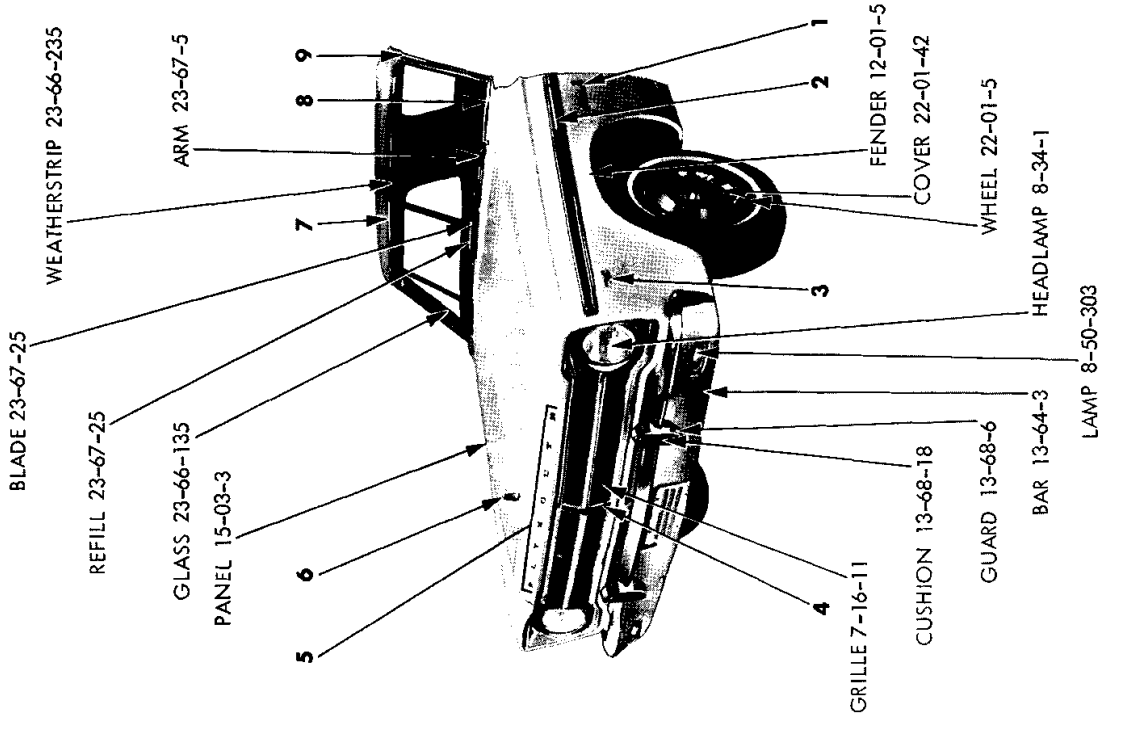

19a0251

EXTERIOR VIEW - BELVEDERE R-H CONVERTIBLE COUPE

MyMopar.com

REF. NO.	QTY	PART NUMBER	DESCRIPTION
1	2	2578 627	NAME PLATE, Fender Side, Belvedere II (12-15-21)
	10	1839 995	Nut
2	1	2525 840-1	MOULDING PACKAGE, Fender Side, Red (12-15-2)
	1	2525 842-3	White
	1	2525 838-9	Black
	2	6001 686	Retainer
	8	6001 630	Retainer
	6	6001 728	Retainer
	6	---- ---	Nut
3	2	2578 630	ORNAMENT, Fender Side, V8 (12-15-21)
	4	6023 685	Nut
4	1	2584 534	MEDALLION PACKAGE, Radiator Grille (7-17-1)
	4	445 160	Nut
5	1	2528 323	LETTER, Hood Front Name, "P" (15-06-16)
	1	2528 324	"L"
	1	2528 325	"Y"
	1	2528 326	"M"
	1	2528 327	"O"
	1	2528 328	"U"
	1	2528 329	"T"
	1	2528 330	"H"
	16	6000 616	Nut, w/Retainer
6	1	2449 861	ORNAMENT, Hood Top, w/o Space for Cu. In. Engine Displacement (15-03-18)
	1	2578 640	ORNAMENT, Hood Top, w/Space for Cu. In. Engine Displacement
	1	2578 733	ORNAMENT, w/Decal, Hood Top, w/318 Cu. In. Decal
	1	2578 734	ORNAMENT, w/Decal, Hood Top, w/361 Cu. In. Decal
	1	2578 735	ORNAMENT, w/Decal, Hood Top, w/383 Cu. In. Decal
	1	2578 736	ORNAMENT, w/Decal, Hood Top, w/426 Cu. In. Decal
7	1	2482 898-9	MOULDING, Windshield Header Outside (23-23-65)
	7	162 402	Screw
8	1	2218 595	MOULDING, Windshield Outside Finish Lower (23-23-65)
	10	6001 537	Retainer
9	1	2218 596-7	MOULDING, Windshield Outside Finish Side (23-23-65)
	6	6023 247	Screw
10	1	2495 366-7	MOULDING PACKAGE, Quarter Outside Belt (23-23-39)
	14	6024 472	Fastener
11	1	2448 458-9	MOULDING PACKAGE, Deck Opening Upper Panel (23-23-31)
	10	6024 477	Fastener
12	1	2448 456	COVER PACKAGE, Deck Opening Upper Panel Moulding Joint (23-23-41)
	1	6024 477	Fastener
13	1	2528 323	LETTER "P", Deck Lid Name (23-19-114)
	1	2528 324	"L"
	1	2528 325	"Y"
	1	2528 326	"M"
	1	2528 327	"O"
	1	2528 328	"U"
	1	2528 329	"T"
	1	2528 330	"H"
	16	152 259	Nut
14	1	2573 818	PANEL and PLATE, Deck Lower Finish, Right (23-23-28)
	6	6001 430	Retainer
	6	6024 705	Seal
	6	6024 679	Nut
	2	1839 995	Nut
	2	---- ---	Retainer
	1	6025 286	Nut
	1	6024 714	Washer
15	1	2573 827	PANEL, Deck Lower Finish, Left (23-23-28)
	6	6001 430	Retainer
	6	6024 705	Seal
	6	6024 679	Nut
16	1	2528 586-7	MOULDING, Quarter Outside Rear, Prime (23-23-39)
	2	2529 991	Insulator
	2	---- ---	Seal
	2	152 272	Nut
17	1	2584 050-1	MOULDING and CAP PACKAGE, Quarter Outside, Red (23-23-39)
	1	2584 052-3	White
	1	2584 054-5	Black
	12	6001 630	Retainer
	2	6024 271	Screw
	8	6001 728	Retainer
	10	6024 679	Nut
	2	6024 711	Washer
18	1	2584 476	MOULDING PACKAGE, Body Side Sill Outside (23-23-2)
	2	6025 187	Screw
	18	6001 580	Retainer
19	1	2584 026-7	MOULDING PACKAGE, Front Door Outside, Red (23-23-32)
	1	2584 028-9	White
	1	2584 030-1	Black
	8	6001 630	Retainer
	2	---- ---	Screw
	2	6001 743	Retainer
	2	6001 755	Retainer
	2	9417 621	Nut

All Packages Include Attaching Parts

Part Type Code is Indicated in Parentheses

EXTERIOR VIEW - BELVEDERE R-H CONVERTIBLE COUPE

MyMopar.com

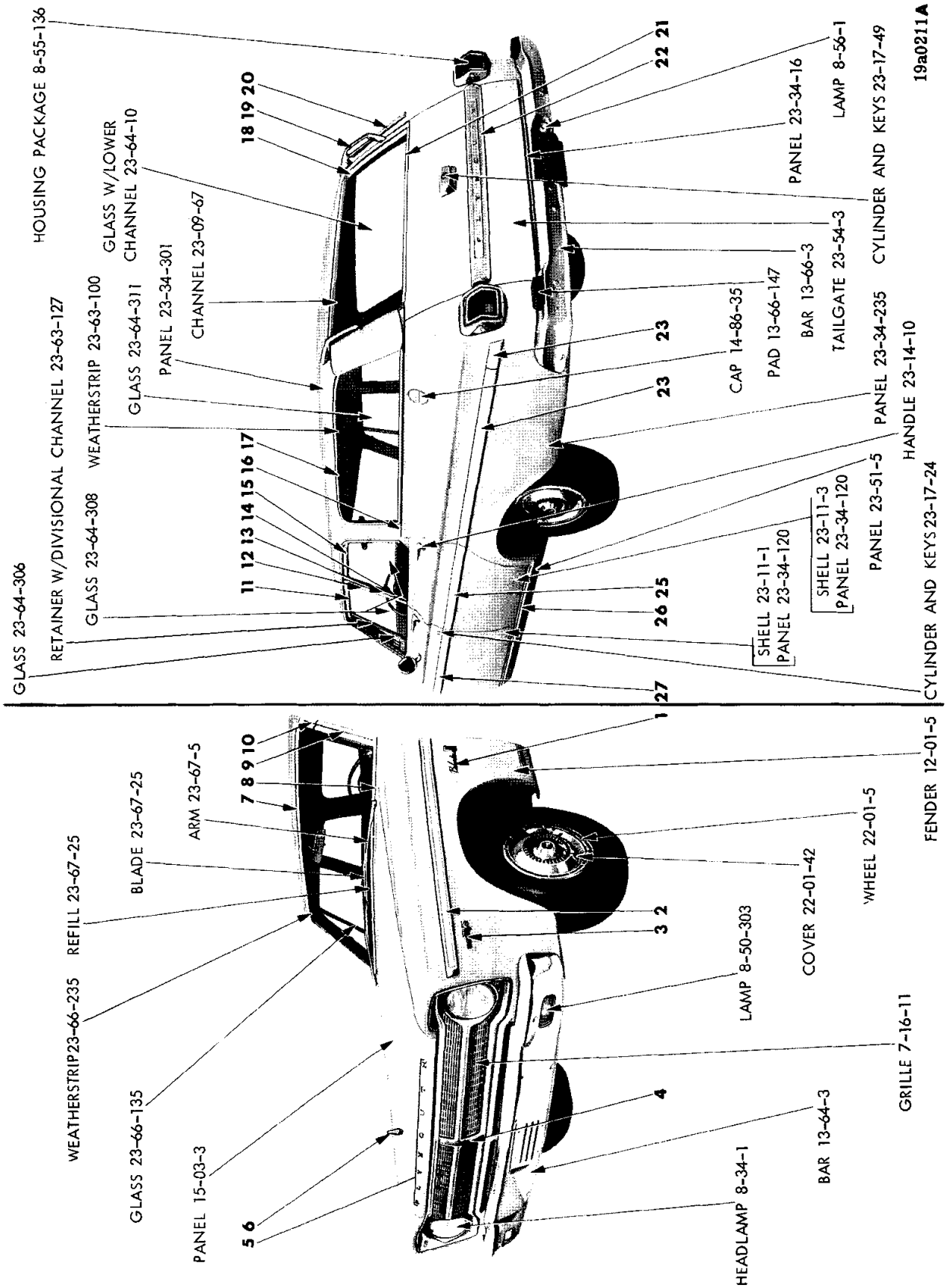

EXTERIOR VIEW - BELVEDERE R-H STATION WAGON

MyMopar.com

REF. NO.	QTY	PART NUMBER	DESCRIPTION
1	2	2578 627	NAME PLATE, Fender Side, Belvedere II (12-15-21)
	10	1839 995	Nut
2	1	2525 840-1	MOULDING PACKAGE, Fender Side, Red (12-15-2)
	1	2525 842-3	White
	1	2525 838-9	Black
	2	6001 686	Retainer
	8	6001 630	Retainer
	6	6001 728	Retainer 6 ---- --- Nut
3	2	2578 632	NAME PLATE, Fender Side, Commando V8 (12-15-21)
	4	6023 685	Nut
4	1	2584 534	MEDALLION PACKAGE, Radiator Grille (7-17-1)
	4	445 160	Nut
5	1	2528 323	LETTER, Hood Front Name, "P" (15-06-16)
	1	2528 324	"L"
	1	2528 325	"Y"
	1	2528 326	"M"
	1	2528 327	"O"
	1	2528 328	"U"
	1	2528 329	"T"
	1	2528 330	"H"
	16	6000 616	Nut, w/Retainer
6	1	2449 861	ORNAMENT, Hood Top (15-03-18)
	1	2578 640	ORNAMENT, Hood Top, w/Space for Cu. In. Engine Displacement
	1	2578 733	ORNAMENT, w/Decal, Hood Top, w/318 Cu. In. Decal
	1	2578 734	w/361 Cu. In. Decal
	1	2578 735	w/383 Cu. In. Decal
	1	2578 736	w/426 Cu. In. Decal
7	1	2218 594	MOULDING, Windshield Outside Upper (23-23-65)
	8	6001 537	Retainer and Screw
8	1	2218 595	MOULDING, Windshield Outside Finish Lower (23-23-68)
	10	6001 537	Retainer and Screw
9	1	2218 596-7	MOULDING, Windshield Outside Finish Side (23-23-65)
	6	6023 247	Screw
10	1	2491 014-5	MOULDING, Windshield Outside Side Upr. Ext. (23-23-65)
11	1	2218 444-5	MOULDING, Frt. Dr. Window Frame Upr. & Frt. (23-23-32)
12	1	2167 998-9	MOULDING, Frt. Dr. Window Frame Rr. (23-23-32)
13	1	2216 356-7	PANEL, Center Pillar Upper Finish (23-23-16)
	4	6022 890	Screw
14	1	2167 998-9	MOULDING, Rear Door Window Frame Front (23-23-33)
15	1	2216 036-7	MOULDING, Rear Door Window Frame Upper (23-23-33)
16	1	2299 374	MOULDING PACKAGE, Quarter Outside Belt Paint Break Right (Spec. Equip.)(23-23-39)
	1	2299 399	MOULDING PACKAGE, Quarter Outside Belt Paint Break Left (Spec. Equip.)(23-23-39)
	4	6001 071	Clip
17	2	2422 471	LOCKINGSTRIP, Quarter Window Glass Weatherstrip (23-63-110)
18	1	2480 976-7	MOULDING, Rear Upper Pillar Outside (23-23-60)
	8	9417 732	Screw
19	1	2482 768-9	HANDLE, Roof Panel Outside Assist (23-36-123)
20	1	2252 254-5	DEFLECTOR, Roof Panel Outside Air (23-36-134)
	2	167 079	Screw
	4	9418 381	Screw
21	1	2448 488	MOULDING PACKAGE, Tailgate Outside Panel Belt (23-23-61)
	3	6023 687	Seal
	3	6023 682	Screw
	2	1839 995	Nut
22	1	2526 919	PANEL and STUDS, Tailgate Finish (23-23-77)
	5	9411 618	Nut
	5	6024 711	Seal
23	1	2584 038-9	MOULDING and CAP PACKAGE, Quarter Outside, Red (23-23-39)
	1	2584 040-1	White
	1	2584 042-3	Black
	12	6001 630	Retainer
	2	6024 271	Screw
	2	6024 679	Nut
	★	6024 711	Washer
25	1	2584 056-7	MOULDING PACKAGE, Rear Door Outside, Red (23-23-33)
	1	2584 058-9	White
	1	2584 060-1	Black
	8	6001 630	Retainer
	2	6001 629	Retainer
	4	9417 621	Nut
	1	6001 755	Retainer
26	2	2584 476	MOULDING PACKAGE, Body Side Sill Outside (23-23-2)
	18	6001 580	Retainer
	2	6025 187	Screw
27	1	2584 032-3	MOULDING PACKAGE, Front Door Outside, Red (23-23-32)
	1	2584 034-5	White
	1	2584 036-7	Black
	8	6001 630	Retainer
	4	6001 755	Retainer
	2	9417 621	Nut

All Packages Include Attaching Parts

Part Type Code is Indicated in Parentheses

EXTERIOR VIEW - BELVEDERE R-H STATION WAGON

MyMopar.com

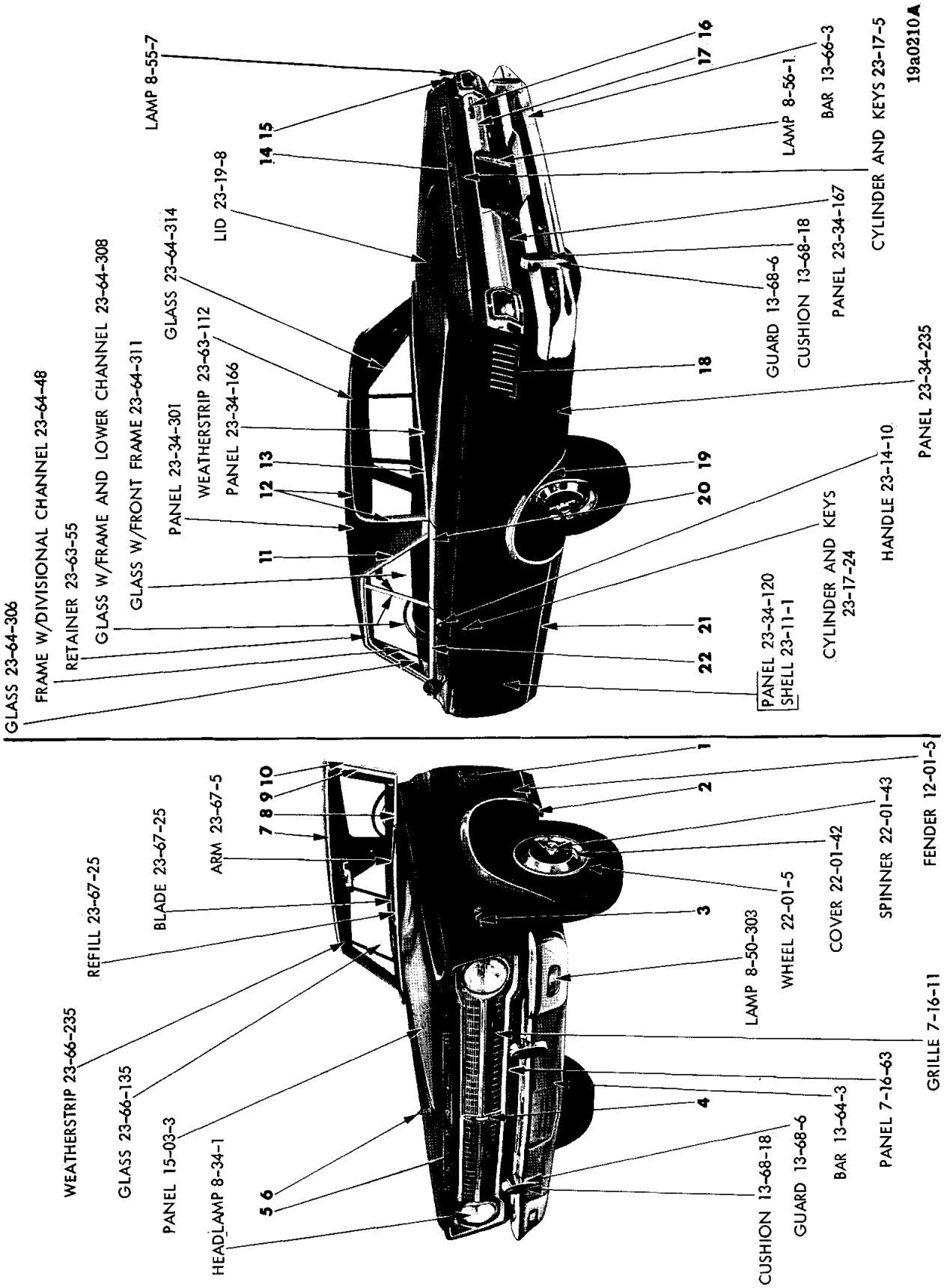

EXTERIOR VIEW - BELVEDERE R-P 2 DOOR HARDTOP

MyMopar.com

REF. NO.	QTY	PART NUMBER	DESCRIPTION
1	2	2449 868	NAME PLATE, Fender Side, Satellite (12-15-21)
	8	6023 260	Nut
	2	6000 050	Clip
2	1	2584 472-3	MOULDING PACKAGE, Fender Wheel Opening (12-15-2)
	16	6024 271	Screw
3	2	2578 632	NAME PLATE, Fender Side, Commando V8 (12-15-21)
	4	6023 685	Nut
4	1	2584 535	MEDALLION PACKAGE, Radiator Grille (7-17-1)
	4	446 160	Nut
5	1	2528 323	LETTER, Hood Front Name, "P" (15-06-16)
	1	2528 324	"L"
	1	2528 325	"Y"
	1	2528 326	"M"
	1	2528 327	"O"
	1	2528 328	"U"
	1	2528 329	"T"
	1	2528 330	"H"
	16	6000 616	Nut, w/Retainer
6	1	2449 861	ORNAMENT, Hood Top (15-03-18)
	1	2578 640	ORNAMENT, Hood Top, w/Space for Cu. In. Engine Displacement
	1	2578 733	ORNAMENT, w/Decal, Hood Top, w/318 Cu. In. Decal
	1	2578 734	w/361 Cu. In. Decal
	1	2578 735	w/383 Cu. In. Decal
	1	2578 736	w/426 Cu. In. Decal
7	1	2218 594	MOULDING, Windshield Outside Upper (23-23-65)
	8	6001 537	Retainer and Screw
8	1	2218 595	MOULDING, Windshield Outside Finish Lower (23-23-65)
	10	6001 537	Retainer and Screw
9	1	2218 596-7	MOULDING, Windshield Outside Finish Side (23-23-65)
	6	6023 247	Screw
10	1	2492 712-3	MOULDING, Windshield Outside Side Upr. Ext. (23-23-65)
11	1	2525 556-7	MOULDING and RETAINER PACKAGE, Roof Side Drain Trough Frt. & Rr. (23-59-61)
	6	6024 271	Screw
	2	6024 718	Seal 2 446 059 Nut
12	1	2495 276-7	MOULDING PACKAGE, Rr. Wdo. Outside Upr. & Side (23-23-52)
	14	6001 084	Retainer and Screw
13	1	2495 274-5	MOULDING PACKAGE, Rr. Wdo. Outside Lwr. (23-23-52)
	12	6001 084	Retainer and Screw
14	1	2528 323	LETTER "P", Deck Lid Name (23-19-114)
	1	2528 324	"L"
	1	2528 325	"Y"
	1	2528 326	"M"
	1	2528 327	"O"
	1	2528 328	"U"
	1	2528 329	"T"
	1	2528 330	"H"
	16	152 259	Nut
15	1	2528 586-7	MOULDING, Quarter Outside Rear Prime (23-23-39)
	2	2529 991	Insulator
	2	---- ---	Seal
	2	152 272	Nut
16	1	2526 730	NAME PLATE, Deck Lower Finish Panel "Satellite" (23-34-184)
	4	---- ---	Nut
17	1	2527 712	PANEL and NAME PLATE, Deck Lower Finish, Right (23-23-28)
	6	6001 430	Retainer
	6	6024 705	Seal
	6	6024 679	Nut
	2	---- ---	Retainer and Seal
	2	1839 995	Nut
	1	2527 777	PANEL, Deck Opening Lower Finish, Left (23-23-28)
	6	6001 430	Retainer
	6	6024 705	Seal
	6	6024 679	Nut
18	7	2573 618-9	ORNAMENT, Quarter Outside Lower (23-34-334)
	28	6023 685	Nut
	28	---- ---	Seal
19	1	2584 480-1	MOULDING PACKAGE, Quarter Outside Wheel Opening (23-23-39)
	16	6024 271	Screw
20	1	2573 608-9	MOULDING, Quarter Outside Belt Upper (23-23-39)
	8	6001 086	Retainer
	4	6024 271	Screw
	1	2573 612-3	MOULDING, Quarter Outside Panel Belt Rear (23-23-39)
	★	---- ---	Retainer
	1	2584 484-5	MOULDING PACKAGE, Quarter Outside Belt Lower Front and Rear (23-23-39)
	8	6001 086	Retainer
	4	6024 271	Screw
21	1	2584 478-9	MOULDING PACKAGE, Body Side Sill Outside (23-23-2)
	2	6025 187	Screw
	2	6023 231	Screw
	18	6001 580	Retainer
	14	6001 823	Retainer
22	1	2422 894-5	MOULDING, Door Outside Belt Upper (23-23-39)
	1	2448 540-1	MOULDING PACKAGE, Door Outside Panel Belt Lower Front and Rear (23-23-32)
	14	6001 086	Retainer
	4	6024 271	Screw

All Packages Include Attaching Parts

Part Type Code is Indicated in Parentheses

EXTERIOR VIEW - BELVEDERE R-P 2 DOOR HARDTOP

MyMopar.com

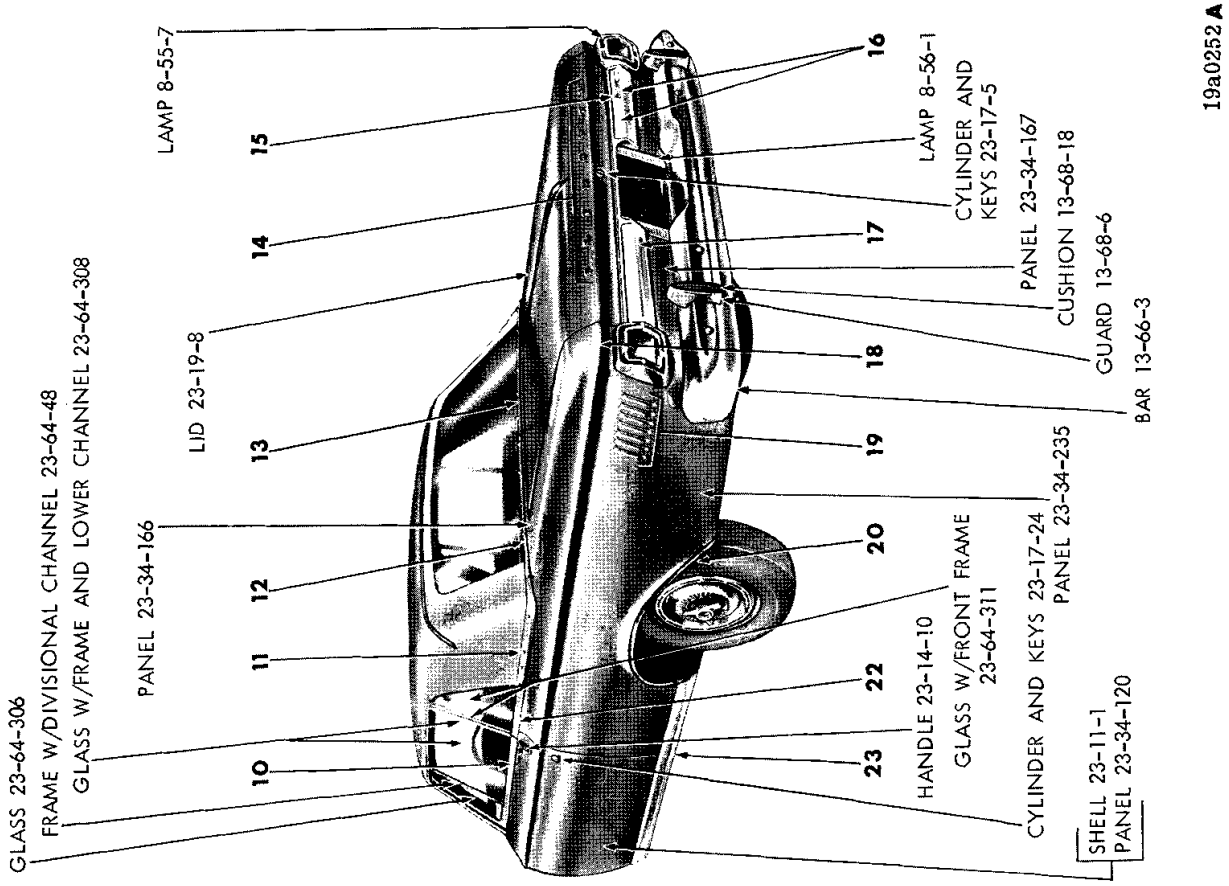

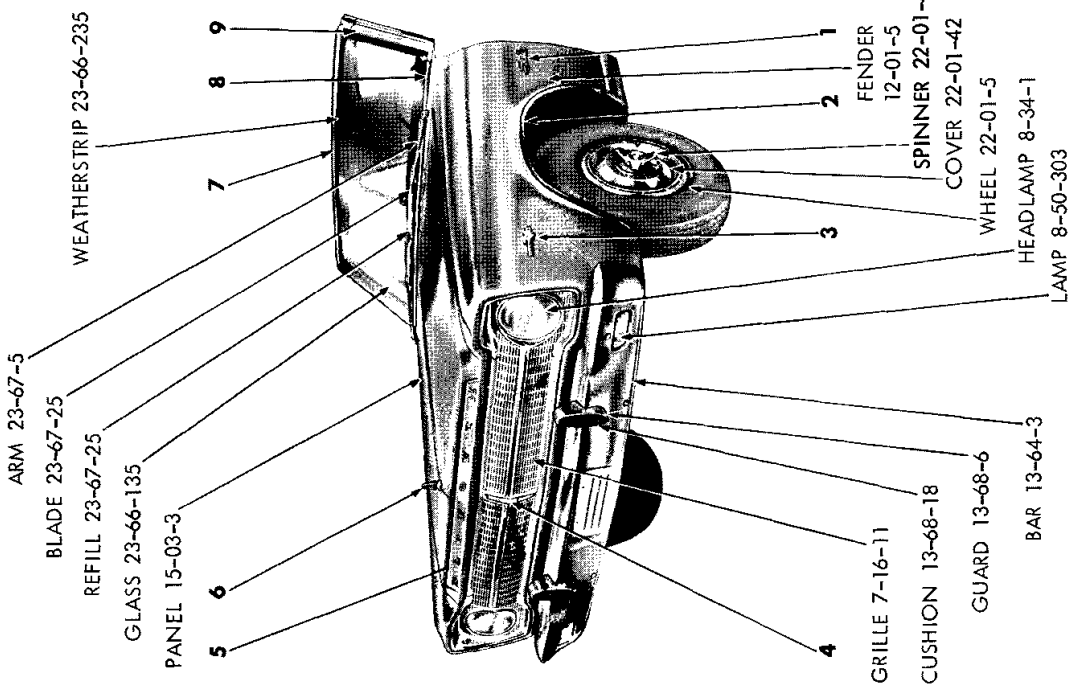

EXTERIOR VIEW - BELVEDERE R-P CONVERTIBLE COUPE

MyMopar.com

REF. NO.	QTY	PART NUMBER	DESCRIPTION
1	2	2449 868	NAME PLATE, Fender Side, Satellite (12-15-21)
	8	6023 260	Nut
	2	6000 050	Clip
2	1	2584 472-3	MOULDING PACKAGE, Fender Wheel Opening (12-15-2)
	16	6024 271	Screw
3	2	2578 632	NAME PLATE, Fender Side, Commando V8 (12-15-21)
	4	6023 685	Nut
4	1	2584 535	MEDALLION PACKAGE, Radiator Grille (7-17-1)
	4	445 160	Nut
5	1	2528 323	LETTER, Hood Front Name, "P" (15-06-16)
	1	2528 324	"L"
	1	2528 325	"Y"
	1	2528 326	"M"
	1	2528 327	"O"
	1	2528 328	"U"
	1	2528 329	"T"
	1	2528 330	"H"
	16	6000 616	Nut, w/Retainer
6	1	2449 861	ORNAMENT, Hood Top, w/o Space for Cu. In. Engine Displacement (15-03-18)
	1	2578 640	ORNAMENT, Hood Top, w/Space for Cu. In. Engine Displacement
	1	2578 733	ORNAMENT, w/Decal, Hood Top, w/318 Cu. In. Decal
	1	2578 734	w/361 Cu. In. Decal
	1	2578 735	w/383 Cu. In. Decal
	1	2578 736	w/426 Cu. In. Decal
7	1	2482 898-9	MOULDING, Windshield Header Outside (23-23-65)
	7	162 402	Screw
8	1	2218 595	MOULDING, Windshield Outside Finish Lower (23-23-65)
	10	6001 537	Retainer
9	1	2218 596-7	MOULDING, Windshield Outside Finish Side (23-23-65)
	6	6023 247	Screw
10	1	2422 894-5	MOULDING, Door Outside Panel Belt Upper (23-23-32)
	1	2448 540-1	MOULDING PACKAGE, Door Outside Panel Belt Lower Front and Rear (23-23-32)
	14	6001 086	Retainer
	4	6024 271	Screw
11	1	2584 486-7	MOULDING PACKAGE, Quarter Outside Belt Rear (23-23-39)
	10	6024 477	Fastener
	4	2094 394	Fastener
12	1	2448 458-9	MOULDING PACKAGE, Deck Opening Upper Panel (23-23-31)
	10	6024 477	Fastener
13	1	2448 456	COVER PACKAGE, Deck Opening Upper Panel Moulding Joint (23-23-41)
	1	6024 477	Fastener
14	1	2528 323	LETTER "P", Deck Lid Name (23-19-114)
	1	2528 324	"L"
	1	2528 325	"Y"
	1	2528 326	"M"
	1	2528 327	"O"
	1	2528 328	"U"
	1	2528 329	"T"
	1	2528 330	"H"
	16	152 259	Nut
15	1	2526 730	NAME PLATE, Deck Lower Finish Panel, Satellite (23-34-184)
	4	---- ---	Nut
16	1	2527 712	PANEL and NAME PLATE, Deck Lower Finish, Right (23-23-28)
	2	1839 995	Nut
	6	6024 679	Nut
	1	6025 286	Nut
	6	6024 705	Washer
	1	6024 714	Washer
	6	6001 430	Retainer
	2	---- ---	Retainer
17	1	2527 777	PANEL, Deck Opening Lower Finish, Left (23-23-28)
	6	6024 679	Nut
	6	6024 705	Washer
	6	6001 430	Retainer
18	1	2528 586-7	MOULDING, Quarter Outside Rear Prime (23-23-39)
	2	2529 991	Insulator
	2	---- ---	Seal
	2	152 272	Nut
19	7	2573 618-9	ORNAMENT, Quarter Outside Lower (23-34-334)
	28	6023 685	Nut
	28	---- ---	Seal
20	1	2584 480-1	MOULDING PACKAGE, Quarter Outside Wheel Opening (23-23-39)
	16	6024 271	Screw
22	1	2423 548-9	MOULDING, Quarter Outside Panel Belt Upper (23-23-39)
	2	6024 271	Screw
	1	2448 414-5	MOULDING PACKAGE, Quarter Outside Panel Belt Lower Front (23-23-39)
	6	6001 086	Retainer
23	1	2584 478-9	MOULDING PACKAGE, Body Side Sill Outside (23-23-2)
	2	6025 187	Screw
	18	6001 580	Retainer
	14	6001 823	Retainer
	2	6023 681	Screw

All Packages Include Attaching Parts

Part Type Code is Indicated in Parentheses

EXTERIOR VIEW - BELVEDERE R-P CONVERTIBLE COUPE

MyMopar.com

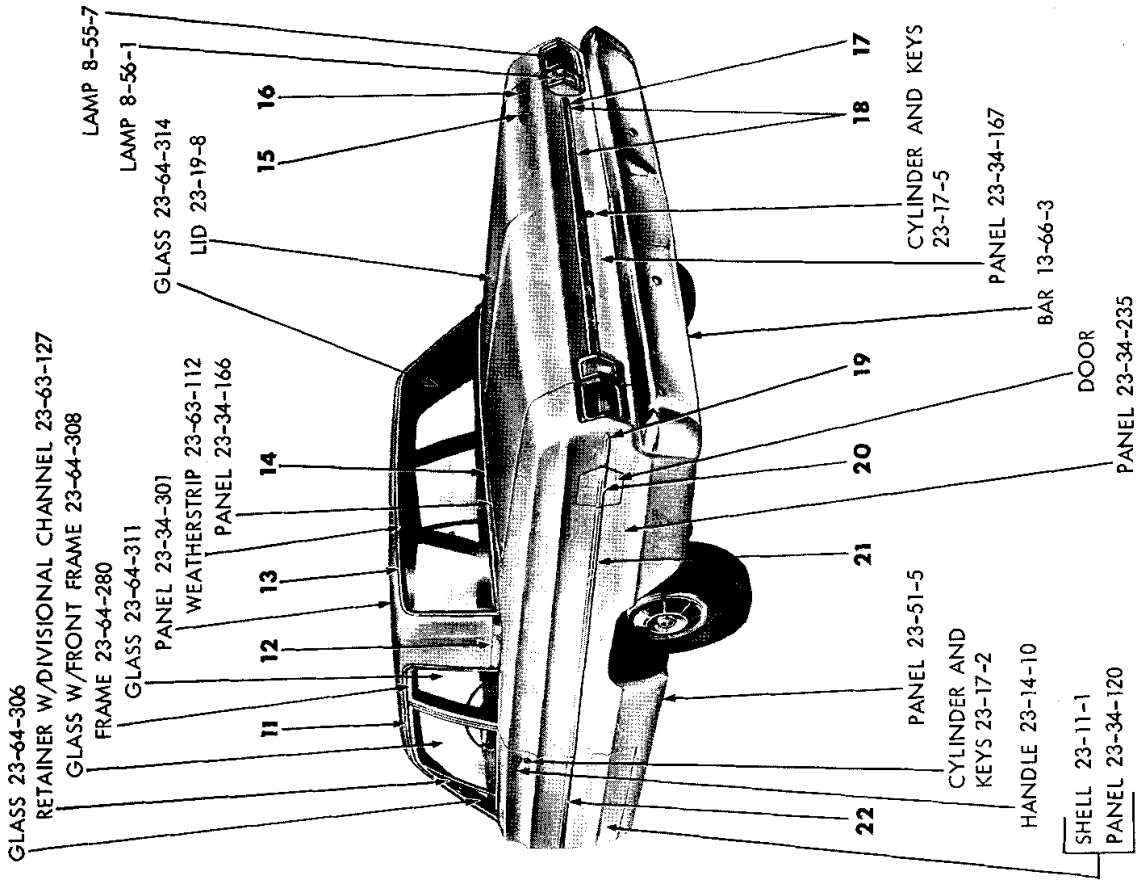

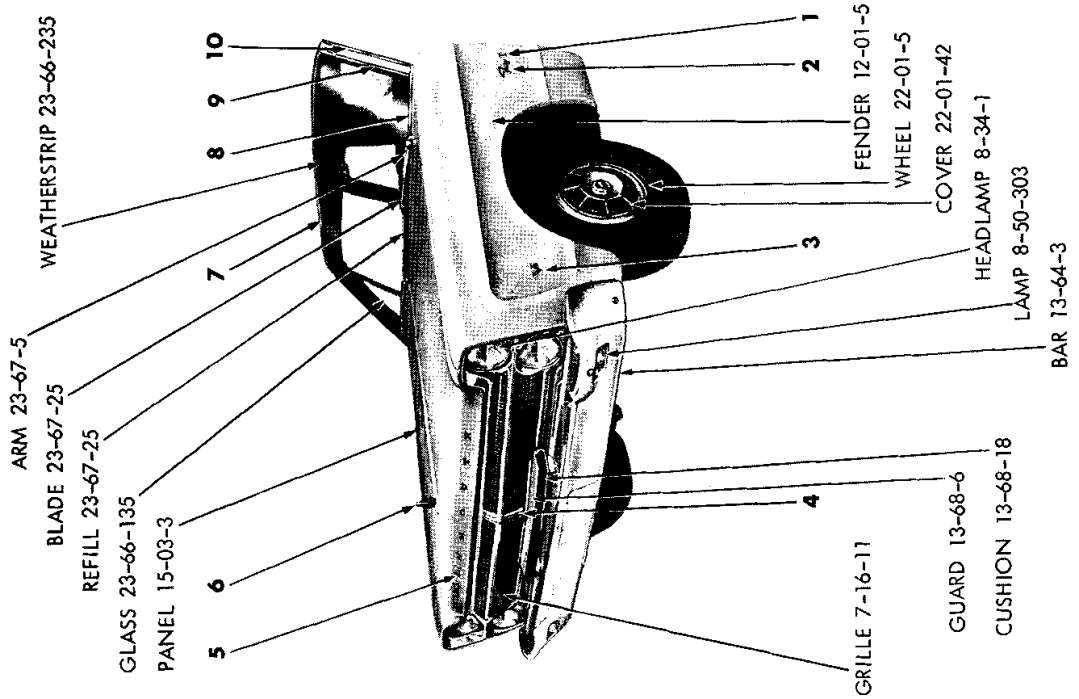

EXTERIOR VIEW - PLYMOUTH P-L 2 DOOR SEDAN

MyMopar.com

REF. NO.	QTY	PART NUMBER	DESCRIPTION
1	2	2524 208	NUMERAL, Fender Side, I (12-15-21)
	4	6000 050	Clip
2	2	2524 233	NAME PLATE, Fender Side, Fury (12-15-21)
	6	6000 050	Clip
3	2	2578 630	ORNAMENT, Fender Side, V8 (12-15-21)
	4	6023 685	Nut
	2	2578 632	NAME PLATE, Fender Side, Commando V8 (Special Equipment) (12-15-21)
	4	6023 685	Nut
4	1	2584 536	MEDALLION PACKAGE, Radiator Grille (7-17-1)
	4	6024 202	Nut 4 445 160 Nut
5	1	2528 323	LETTER, Hood Front Name, "P" (15-06-16)
	1	2528 324	"L"
	1	2528 325	"Y"
	1	2528 326	"M"
	1	2528 327	"O"
	1	2528 328	"U"
	1	2528 329	"T"
	1	2528 330	"H"
	16	6000 616	Nut, w/Retainer
6	1	2524 200	ORNAMENT, Hood Top (15-03-18)
	1	---- ---	Stud
7	1	2584 104	MOULDING PACKAGE, Windshield Outside Upper (23-23-65)
	8	6001 648	Retainer
8	1	2584 110-1	MOULDING PACKAGE, Windshield Outside Lower (23-23-65)
	10	6001 697	Retainer
	1	6001 794	Retainer, Right
	1	6001 795	Retainer, Left
	2	6024 895	Screw
9	1	2584 108-9	MOULDING PACKAGE, Windshield Outside Side (23-23-65)
	8	6001 648	Retainer
10	1	2529 264-5	MOULDING, Body Front Pillar Drain Trough (23-59-61)
11	1	2526 140-1	MOULDING, Roof Side Drain Trough (23-59-61)
12	1	2526 112-3	NAME PLATE, Roof Outside Belt (23-34-238)
	4	9411 618	Nut
13	1	2584 006-7	MOULDING PACKAGE, Rear Window Outside Side and Upper (23-23-52)(Note #1)
	12	6001 648	Retainer and Screw
	1	2807 134-5	MOULDING PACKAGE, Rear Window Outside Side and Upper (23-23-52)(Note #2)
14	1	2525 979	MOULDING PACKAGE, Rear Window Outside Lower (23-23-52) (Note #1)
	6	6001 648	Retainer and Screw
	1	2807 136-7	MOULDING PACKAGE, Rear Window Outside Lower (23-23-52) (Note #2)
15	1	2526 192	NAME PLATE, Deck Lid, Fury (23-19-114)
	3	152 259	Nut
16	1	2524 208	NUMERAL "I", Deck Lid (23-19-114)
	2	152 259	Nut
17	1	2526 580-1	EXTENSION, Deck Lid Name Moulding (23-23-30)
18	1	2584 466	MOULDING PACKAGE, Deck Lid Name (23-23-30)
	7	---- ---	Nut
	7	6001 603	Retainer
19	1	2584 400	MOULDING PACKAGE, Quarter Outside Rear (23-23-39)
	5	6000 709	Clip and Seal
	5	6024 679	Nut
20	1	2584 420	MOULDING PACKAGE, Quarter Outside Filler Door (23-23-39)
	1	6001 621	Clip and Seal
21	1	2584 416-7	MOULDING PACKAGE, Quarter Outside (23-23-39)
	21	6001 621	Clip and Seal
22	1	2584 396-7	MOULDING PACKAGE, Door Outside (23-23-32)
	12	6001 621	Clip and Seal

NOTE 1: UP TO SERIAL NO. 210132

NOTE 2: AFTER SERIAL NO. 210132

All Packages Include Attaching Parts

Part Type Code is Indicated in Parentheses

EXTERIOR VIEW - PLYMOUTH P-L 2 DOOR SEDAN

MyMopar.com

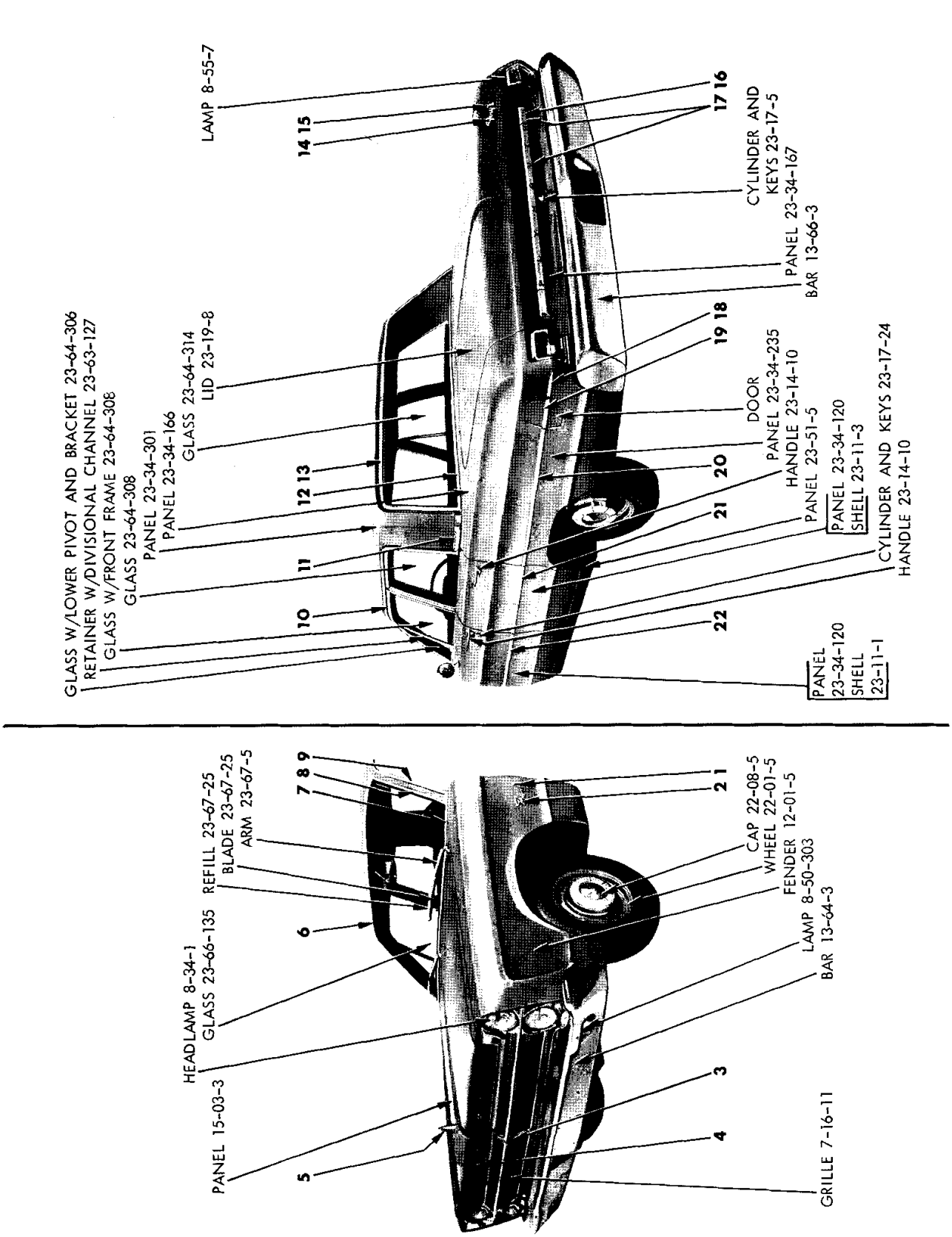

EXTERIOR VIEW - PLYMOUTH P-L 4 DOOR SEDAN

MyMopar.com

REF. NO.	QTY	PART NUMBER	DESCRIPTION
1	2	2524 208	NUMERAL, Fender Side, I (12-15-21)
	4	6000 050	Clip
2	2	2524 233	NAME PLATE, Fender Side, Fury (12-15-21)
	6	6000 050	Clip
3	1	2584 536	MEDALLION PACKAGE, Radiator Grille (7-17-1)
		6024 202	Nut 4 445 160 Nut
4	1	2528 323	LETTER, Hood Front Name, "P" (15-06-16)
	1	2528 324	"L"
	1	2528 325	"Y"
	1	2528 326	"M"
	1	2528 327	"O"
	1	2528 328	"U"
	1	2528 329	"T"
	1	2528 330	"H"
	16	6000 616	Nut, w/Retainer
5	1	2524 200	ORNAMENT, Hood Top (15-03-18)
	1	---- ---	Stud
6	1	2584 104	MOULDING PACKAGE, Windshield Outside Upper (23-23-65)
	8	6001 648	Retainer
7	1	2584 110-1	MOULDING PACKAGE, Windshield Outside Lower (23-23-65)
	10	6001 697	Retainer
	1	6001 794	Retainer, Right
	1	6001 795	Retainer, Left
	2	6024 895	Screw
8	1	2584 108-9	MOULDING PACKAGE, Windshield Outside Side (23-23-65)
	8	6001 648	Retainer
9	1	2529 264-5	MOULDING, Body Front Pillar Drain Trough (23-59-61)
10	1	2526 140-1	MOULDING, Roof Drain Trough Side (23-59-61)
11	1	2526 112-3	NAME PLATE, Roof Belt (23-34-238)
	4	---- ---	Washer
	4	9411 618	Nut
12	1	2525 979	MOULDING PACKAGE, Rear Window Outside Lower (23-23-52) (Note #1)
	6	6001 648	Retainer and Screw
	1	2807 136-7	MOULDING PACKAGE, Rear Window Outside Lower (23-23-52) (Note #2)
13	1	2584 006-7	MOULDING PACKAGE, Rear Window Outside Side and Upper (23-23-52)(Note #1)
	12	6001 648	Retainer and Screw
	1	2807 134-5	MOULDING, Rear Window Outside Side and Upper (23-23-52) (Note #2)
14	1	2526 192	NAME PLATE, Deck Lid (Fury) (23-19-114)
	3	152 259	Nut
15	1	2524 208	NUMERAL "I", Deck Lid (23-19-114)
	2	152 259	Nut
16	1	2526 580-1	EXTENSION, Deck Lid Name Moulding (23-23-30)
17	1	2584 466	MOULDING PACKAGE, Deck Lid Name (23-23-30)
	7	6001 603	Retainer and Stud
	7	---- ---	Nut
18	1	2584 400	MOULDING PACKAGE, Quarter Outside Rear (23-23-39)
	5	6000 709	Clip and Seal
	5	6024 679	Nut
19	1	2584 420	MOULDING PACKAGE, Quarter Outside Fuel Filler Door (23-23-39)
	1	6001 621	Clip w/Seal
	1	9417 621	Nut
	1	6001 615	Retainer
20	1	2584 418-9	MOULDING PACKAGE, Quarter Outside (23-23-39)
	9	6001 621	Clip w/Seal
	9	6000 709	Clip w/Seal
	9	6024 679	Nut
21	1	2584 402-3	MOULDING PACKAGE, Rear Door Outside (23-23-33)
	10	6001 621	Clip w/Seal
	2	9417 621	Nut
	2	6001 615	Retainer
22	1	2584 398-9	MOULDING PACKAGE, Front Door Outside (23-23-32)
	10	6001 621	Clip w/Seal
	2	9417 621	Nut
	2	6001 615	Retainer

NOTE 1: UP TO SERIAL NO. 210132

NOTE 2: AFTER SERIAL NO. 210132

All Packages Include Attaching Parts

Part Type Code is Indicated in Parentheses

EXTERIOR VIEW - PLYMOUTH P-L 4 DOOR SEDAN

MyMopar.com

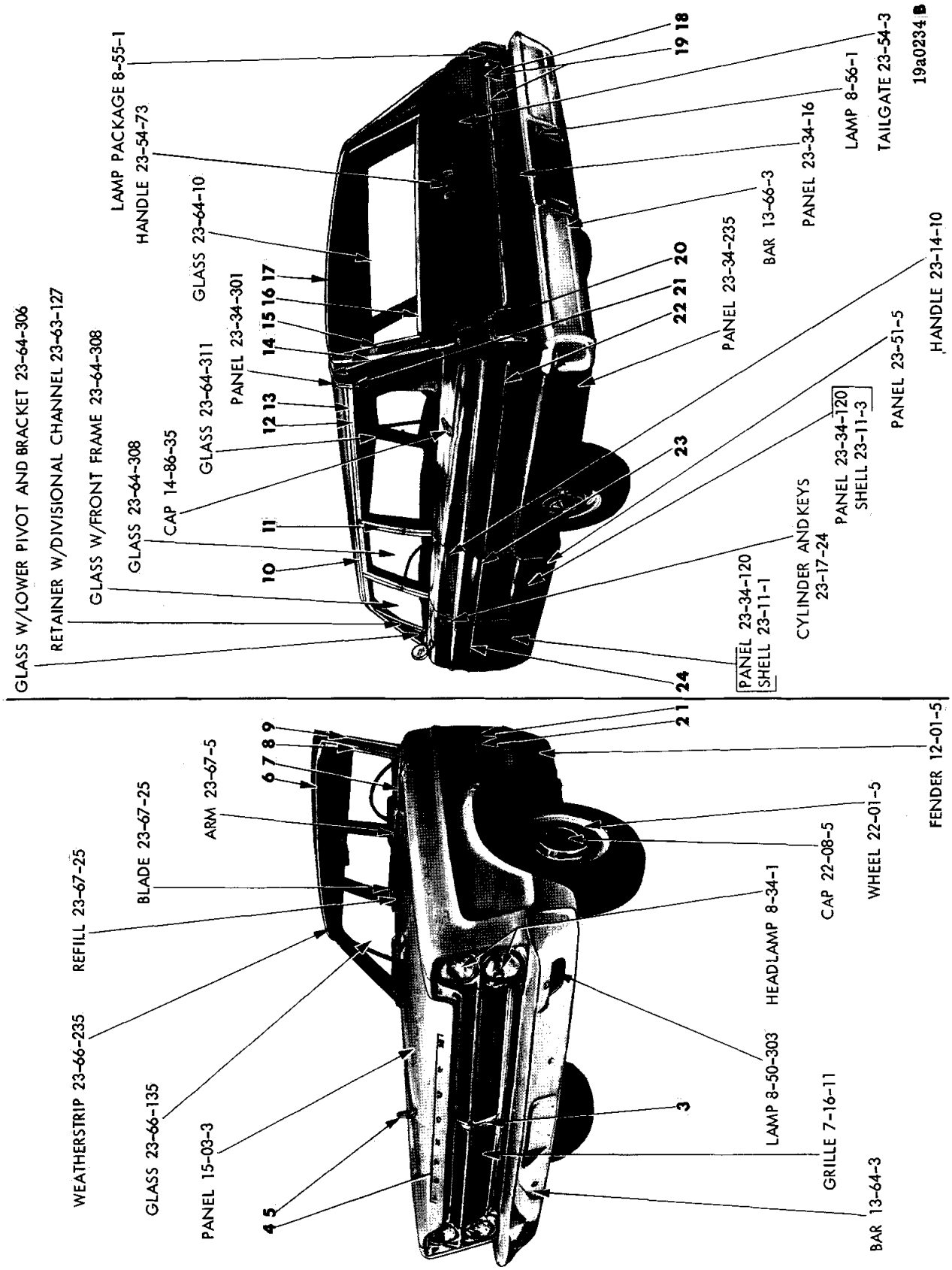

EXTERIOR VIEW - PLYMOUTH P-L STATION WAGON

MyMopar.com

REF. NO.	QTY	PART NUMBER	DESCRIPTION
1	2	2524 208	NUMERAL, Fender Side, I (12-15-21)
	4	6000 050	Clip
2	2	2524 233	NAME PLATE, Fender Side, Fury (12-15-21)
	6	6000 050	Clip
3	1	2584 536	MEDALLION PACKAGE, Radiator Grille (7-17-1)
	4	445 160	Nut
4	1	2528 323	LETTER, Hood Front Name, "P" (15-06-16)
	1	2528 324	"L"
	1	2528 325	"Y"
	1	2528 326	"M"
	1	2528 327	"O"
	1	2528 328	"U"
	1	2528 329	"T"
	1	2528 330	"H"
5	1	2524 200	ORNAMENT, Hood Top (15-03-18)
	1	---- ---	Stud
6	1	2584 104	MOULDING PACKAGE, Windshield Outside Upper (23-23-65)
	8	6001 648	Retainer
7	1	2584 110-1	MOULDING PACKAGE, Windshield Outside Lower (23-23-65)
	10	6001 697	Retainer
	1	6001 794	Retainer, Right
	1	6001 795	Retainer, Left
	2	6024 895	Screw
8	1	2584 108-9	MOULDING PACKAGE, Windshield Outside Side (23-23-65)
	8	6001 648	Retainer
9	1	2529 264-5	MOULDING, Body Front Pillar Drain Trough (23-23-59)
10	1	2526 148-9	MOULDING, Roof Side Drain Trough Rear (23-59-61)
11	1	2526 530-1	MOULDING, Qtr. Wdo. Outside Front, Prime (23-23-73)
12	1	2584 440-1	COVER PACKAGE, Quarter Window Outside Upper Moulding (23-23-73)
	12	116 000	Nut
13	1	2584 450-1	MOULDING PACKAGE, Quarter Window Outside Upper Primed (23-23-73)
	2	2529 938	Seal
	12	6001 837	Retainer
	12	6025 001	Nut
14	1	2584 446-7	MOULDING PACKAGE, Rear Upper Pillar Outside (23-23-60)
	6	---- ---	Clip
15	1	2584 444-5	MOULDING PACKAGE, Rear Upper Pillar Tailgate Opening (23-23-60)
	6	6001 620	Clip
16	1	2528 795	MOULDING, Tailgate Outside Belt (23-23-61)
17	1	2584 421	MOULDING, Roof Outside Rear (23-23-42)
	8	6001 816	Clip
	1	2586 106	MOULDING PACKAGE, Roof Outside Rear (used w/Outside Assist Handle) (23-23-42)
	8	6001 816	Clip
18	1	2526 580-1	EXTENSION, Tailgate Name Moulding (23-23-61)
19	1	2584 096	MOULDING PACKAGE, Tailgate Name (23-23-61)
	8	6001 603	Retainer
	8	273 229	Screw
20	1	2584 641	MOULDING PACKAGE, Roof Top Outside Rear (use w/Two Tone Paint) (23-23-42)
	2	6001 591	Retainer
	2	116 000	Nut
	5	6001 709	Clip and Seal
21	1	2584 642-3	MOULDING PACKAGE, Roof Top Outside Rear Corner (use w/Two Tone Paint)(23-23-42)
	2	6001 498	Clip and Seal
22	1	2584 404-5	MOULDING PACKAGE, Quarter Outside (23-23-39)
	18	6001 621	Clip
23	1	2584 406-7	MOULDING PACKAGE, Rear Door Outside (23-23-33)
	8	6001 735	Retainer
24	1	2584 398-9	MOULDING PACKAGE, Front Door Outside (23-23-32)
	10	6001 621	Clip
	2	9417 621	Nut
	2	6001 615	Retainer

All Packages Include Attaching Parts

Part Type Code is Indicated in Parentheses

EXTERIOR VIEW - PLYMOUTH P-L STATION WAGON

MyMopar.com

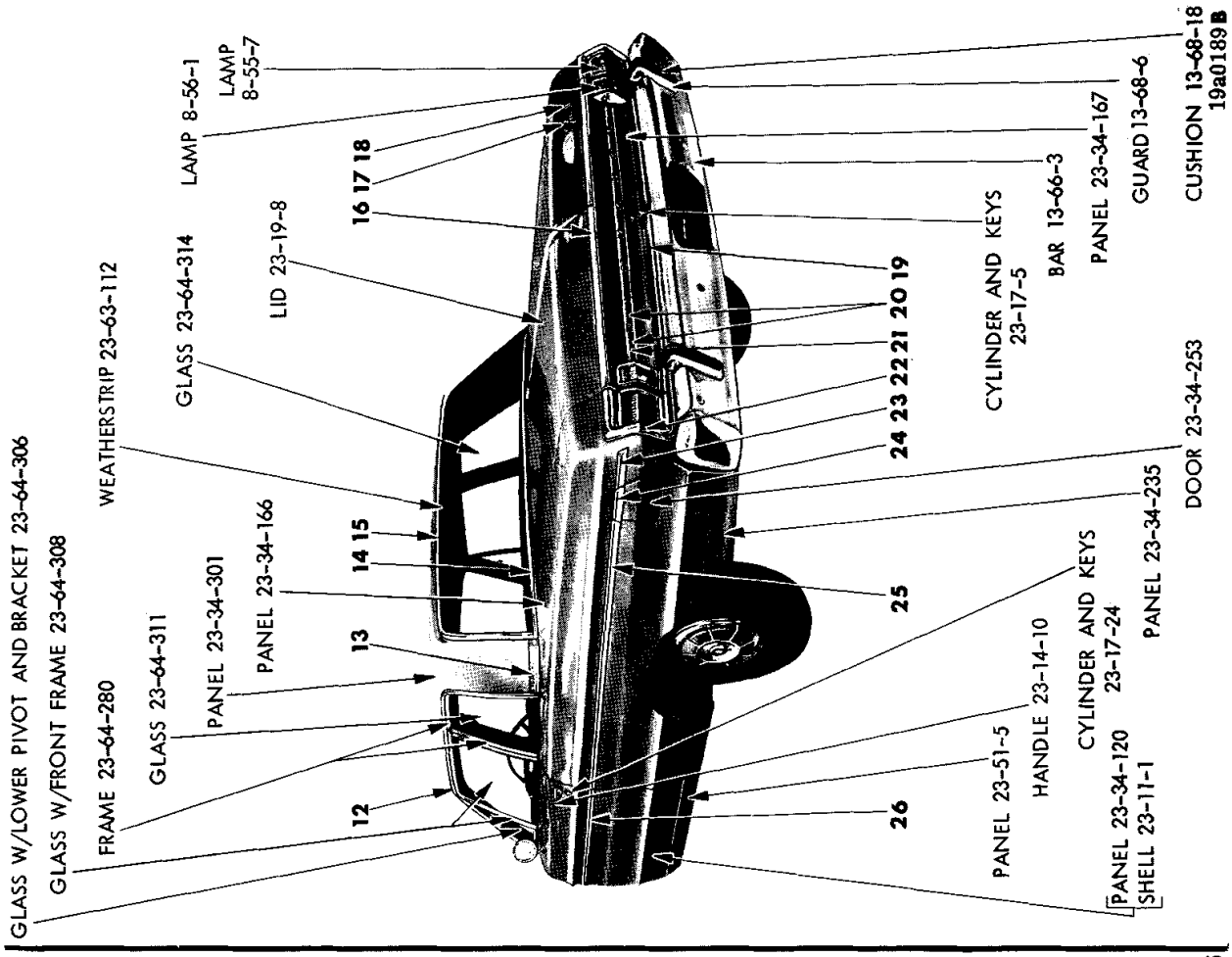

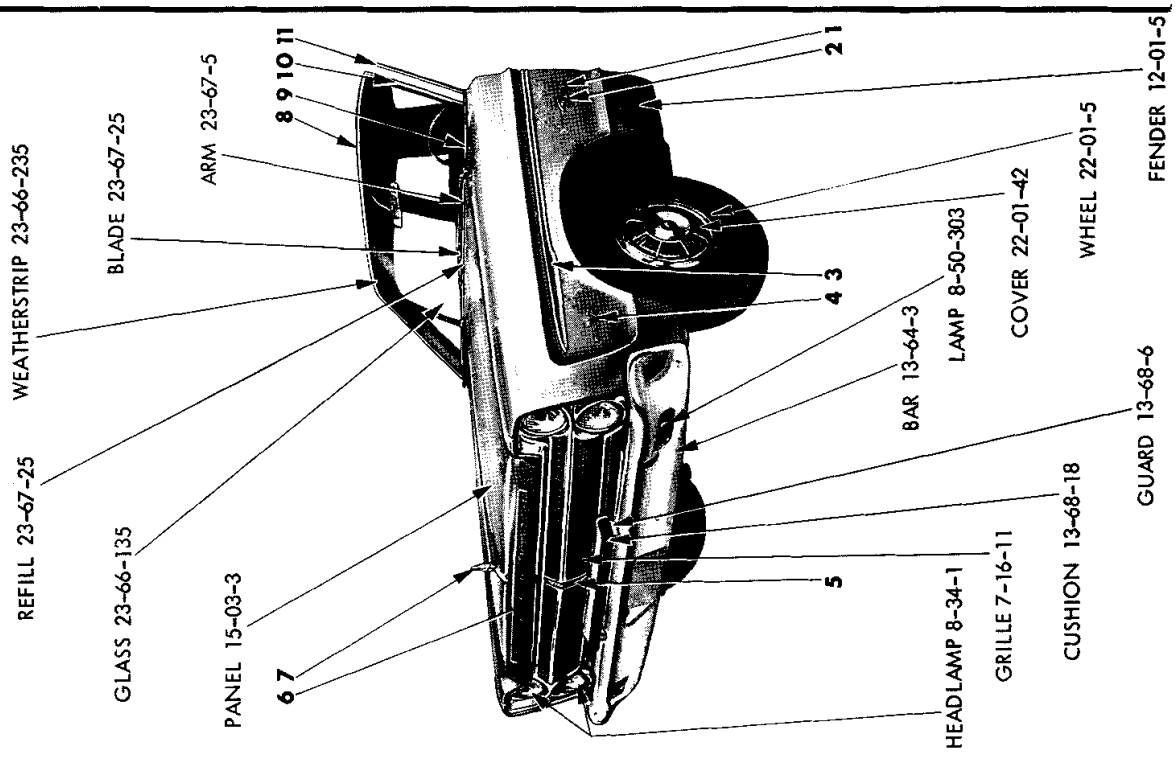

EXTERIOR VIEW - PLYMOUTH P-M 2 DOOR SEDAN

MyMopar.com

REF. NO.	QTY	PART NUMBER	DESCRIPTION
1	2	2524 209	NUMERAL, Fender Side, II (12-15-21)
	4	6000 050	Clip
2	2	2524 233	NAME PLATE, Fender Side, Fury (12-15-21)
	6	6000 050	Clip
3	1	2525 800-1	MOULDING PACKAGE, Fender Side (12-15-2)
	6	6001 642	Retainer
	6	6001 660	Retainer
	2	6001 603	Retainer 8 ---- --- Nut
4	2	2578 632	NAME PLATE, Fender Side, Commando V8 (12-15-21)
	4	6023 685	Nut
5	1	2584 536	MEDALLION PACKAGE, Radiator Grille (7-17-1)
	4	445 160	Nut
6	1	2528 323	LETTER, Hood Front Name, "P" (15-06-16)
	1	2528 324	"L"
	1	2528 325	"Y"
	1	2528 326	"M"
	1	2528 327	"O"
	1	2528 328	"U"
	1	2528 329	"T"
	1	2528 330	"H"
7	1	2524 200	ORNAMENT, Hood Top (15-03-18)
	1	---- ---	Stud
8	1	2584 104	MOULDING PACKAGE, Windshield Outside Upper (23-23-65)
	8	6001 648	Retainer
9	1	2584 110-1	MOULDING PACKAGE, Windshield Outside Lower (23-23-65)
	10	6001 697	Retainer
	1	6001 794	Retainer, Right
	1	6001 795	Retainer, Left
	2	6024 895	Screw
10	1	2584 108-9	MOULDING PACKAGE, Windshield Outside Side (23-23-65)
	8	6001 648	Retainer
11	1	2529 264-5	MOULDING, Body Front Pillar Drain Trough (23-59-61)
12	1	2526 140-1	MOULDING, Roof Side Drain Trough (23-59-61)
13	1	2526 112-3	NAME PLATE, Roof Outside Belt (23-34-238)
	4	---- ---	Washer
	4	9411 618	Nut
14	1	2525 979	MOULDING PACKAGE, Rear Window Outside Lower (23-23-52) (Note #1)
	6	6001 648	Retainer and Screw
	1	2807 136-7	MOULDING PACKAGE, Rear Window Outside Lower (23-23-52) (Note #2)
15	1	2584 006-7	MOULDING PACKAGE, Rear Window Outside Side and Upper (23-23-52) (Note #1)
	12	6001 648	Retainer and Screw
15	CONTINUED		
	1	2807 134-5	MOULDING, Rear Window Outside Side and Upper (23-23-52) (Note #2)
16	1	2584 090	MOULDING PACKAGE, Deck Lid Outside Upper (23-23-30)
	8	6001 692	Retainer
	8	---- ---	Nut
17	1	2526 192	NAME PLATE, Deck Lid "Fury" (23-19-114)
	3	152 259	Nut and Seal
18	1	2524 209	NUMERAL "II", Deck Lid (23-19-114)
	2	152 259	Nut and Seal
19	1	2584 091	MOULDING PACKAGE, Deck Lid Outside Lower (23-23-30)
	6	6001 692	Retainer
	4	6001 690	Retainer
	10	9417 621	Nut
20	1	2584 466	MOULDING PACKAGE, Deck Lid Name (23-23-30)
	7	---- ---	Nut
	7	6001 603	Retainer and Stud
21	1	2526 580-1	EXTENSION, Deck Lid Name Moulding (23-23-30)
22	1	2584 532-3	MOULDING PACKAGE, Quarter Outside Tail Lamp (23-23-39)
	8	6001 809	Retainer
	8	---- ---	Nut
23	1	2584 409	MOULDING PACKAGE, Quarter Panel Rear, Left side Only (23-23-39)
	2	6024 679	Nut
	2	6001 660	Retainer
24	1	2584 401	MOULDING PACKAGE, Quarter Panel Fuel Filler Door (23-23-39)
	2	6024 679	Nut
	2	6001 660	Retainer
25	1	2584 410-1	MOULDING PACKAGE, Quarter Panel Front (23-23-39)
	16	6001 642	Retainer
	10	6001 660	Retainer and Stud
	10	6024 679	Nut
26	1	2584 390-1	MOULDING PACKAGE, Door Outside (23-23-32)
	10	6001 642	Retainer
	2	6001 615	Retainer and Stud
	2	9417 621	Nut
	8	6001 809	Retainer

NOTE 1: UP TO SERIAL NO. 210132

NOTE 2: AFTER SERIAL NO. 210132

All Packages Include Attaching Parts

Part Type Code is Indicated in Parentheses

EXTERIOR VIEW - PLYMOUTH P-M 2 DOOR SEDAN

MyMopar.com

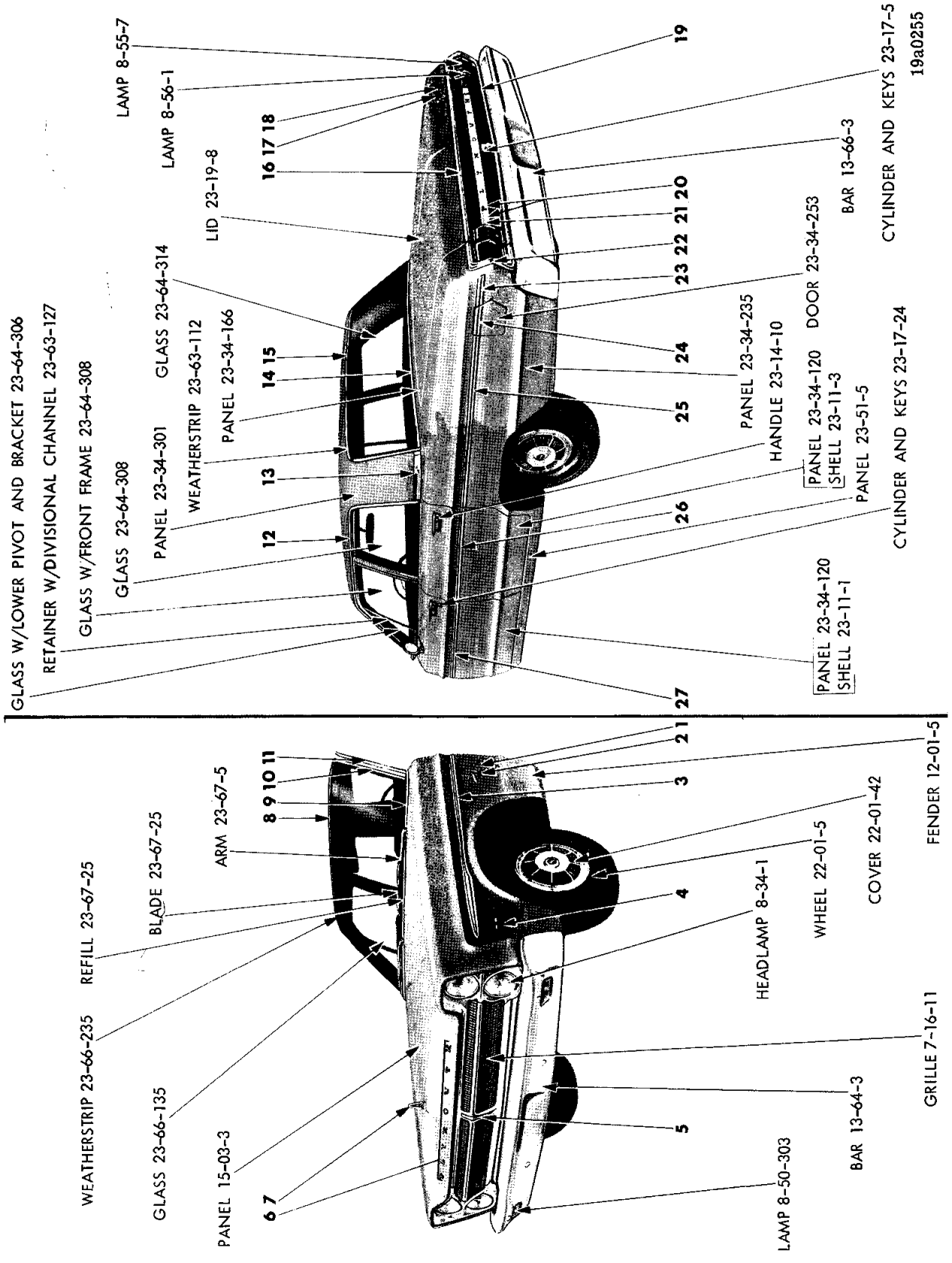

EXTERIOR VIEW - PLYMOUTH P-M 4 DOOR SEDAN

MyMopar.com

REF. NO.	QTY	PART NUMBER	DESCRIPTION
1	2	2524 209	NUMERAL, Fender Side, II (12-15-21)
	4	6000 050	Clip
2	2	2524 233	NAME PLATE, Fender Side, Fury (12-15-21)
	6	6000 050	Clip
3	1	2525 800-1	MOULDING PACKAGE, Fender Side (12-15-2)
	6	6001 642	Retainer and Seal
	6	6001 660	Retainer
	2	6001 603	Retainer 8 ---- --- Nut
4	2	2578 630	ORNAMENT, Fender Side, V8 (12-15-21)
	4	6023 685	Nut
5	1	2584 536	MEDALLION PACKAGE, Radiator Grille (7-17-1)
	4	445 160	Nut
6	1	2528 323	LETTER, Hood Front Name, "P" (15-06-16)
	1	2528 324	"L"
	1	2528 325	"Y"
	1	2528 326	"M"
	1	2528 327	"O"
	1	2528 328	"U"
	1	2528 329	"T"
	1	2528 330	"H"
	16	6000 616	Nut, w/Washer
7	1	2524 200	ORNAMENT, Hood Top, w/o Space For Cu. In. Engine Displacement (15-03-18)
	1	2578 641	ORNAMENT, Hood Top, w/Space For Cu. In. Engine Displacement
	1	2578 730	DECAL, Hood Top Ornament (383)
	1	2578 739	DECAL, Hood Top Ornament (426)
8	1	2584 104	MOULDING PACKAGE, Windshield Outside Upper (23-23-65)
	8	6001 648	Retainer
9	1	2584 110-1	MOULDING PACKAGE, Windshield Outside Lower (23-23-65)
	10	6001 697	Retainer
	1	6001 794	Retainer, Right
	1	6001 795	Retainer, Left
	2	6024 895	Screw
10	1	2584 108-9	MOULDING PACKAGE, Windshield Outside Side (23-23-65)
	8	6001 648	Retainer
11	1	2529 264-5	MOULDING, Body Front Pillar Drain Trough (23-59-61)
12	1	2526 140-1	MOULDING, Roof Side Drain (23-59-61)
13	1	2526 112-3	NAME PLATE, Roof Outside Belt (23-34-238)
	4	---- ---	Washer
	4	9411 618	Nut
14	1	2525 979	MOULDING PACKAGE, Rear Window Outside Lower (23-23-52) (Note #1)
	6	6001 648	Retainer
	1	2807 136-7	MOULDING PACKAGE, Rear Window Outside Lower (23-23-52) (Note #2)

All Packages Include Attaching Parts

REF. NO.	QTY	PART NUMBER	DESCRIPTION
15	1	2584 006-7	MOULDING PACKAGE, Rear Window Outside Side and Upper (23-23-52)(Note #1)
	12	6001 648	Retainer
	1	2807 134-5	MOULDING PACKAGE, Rear Window Outside Side and Upper (23-23-52)(Note #2)
16	1	2584 090	MOULDING PACKAGE, Deck Lid Outside Upper (23-23-30)
	8	6001 692	Retainer
	8	---- ---	Nut
17	1	2526 192	NAME PLATE, Deck Lid, Fury (23-19-114)
	3	152 259	Nut
18	1	2524 209	NUMERAL II, Deck Lid (23-19-114)
	2	152 259	Nut
19	1	2584 091	MOULDING PACKAGE, Deck Lid Outside Lower (23-23-30)
	6	6001 692	Retainer
	4	6001 690	Retainer
	10	9417 621	Nut
20	1	2584 466	MOULDING PACKAGE, Deck Lid Name (23-23-30)
	7	6001 603	Retainer
	7	---- ---	Nut
21	1	2526 580-1	EXTENSION, Deck Lid Name Moulding (23-23-30)
22	1	2584 532-3	MOULDING PACKAGE, Quarter Panel Tail Lamp (23-23-39)
	4	6024 702	Seal
	8	6001 809	Retainer
	8	---- ---	Nut
23	1	2584 409	MOULDING PACKAGE, Quarter Panel Rear, Left (23-23-39)
	2	6001 660	Retainer
	2	6024 679	Nut
24	1	2584 401	MOULDING PACKAGE, Quarter Panel Fuel Filler Door (23-23-39)
	1	6001 621	Clip
	2	6024 679	Nut
	2	6001 660	Retainer
25	1	2584 412	MOULDING PACKAGE, Quarter Panel Front, Right (23-23-39)
	4	6001 642	Retainer
	5	6001 660	Retainer
	5	6024 679	Nut
	1	2584 413	MOULDING PACKAGE, Quarter Panel Front, Left (23-23-39)
	4	6001 642	Retainer
	2	6001 660	Retainer
	2	6024 679	Nut
26	1	2584 392-3	MOULDING PACKAGE, Rear Door Outside (23-23-33)
	6	6001 642	Retainer
	4	6001 675	Retainer
	4	9417 621	Nut
27	1	2584 388-9	MOULDING PACKAGE, Front Door Outside (23-23-32)
	8	6001 642	Retainer
	2	9417 621	Nut
	2	6001 675	Retainer

NOTE 1: UP TO SERIAL NO. 210132

NOTE 2: AFTER SERIAL NO. 210132

Part Type Code is Indicated in Parentheses

EXTERIOR VIEW - PLYMOUTH P-M 4 DOOR SEDAN

MyMopar.com

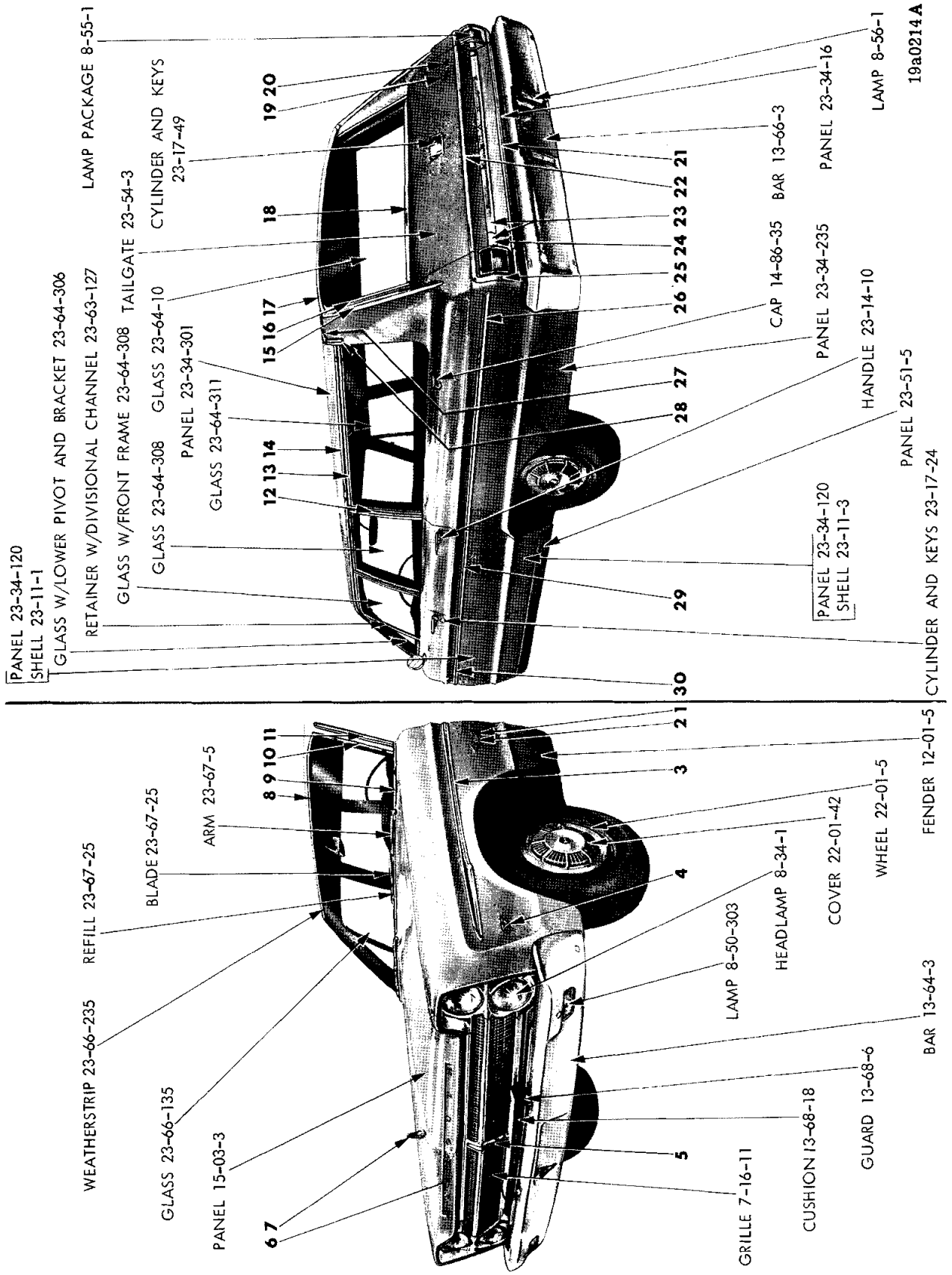

EXTERIOR VIEW - PLYMOUTH P-M STATION WAGON

MyMopar.com

REF. NO.	QTY	PART NUMBER	DESCRIPTION
1	2	2524 209	NUMERAL, Fender Side, II (12-15-21)
	4	6000 050	Clip
2	2	2524 233	NAME PLATE, Fender Side, Fury (12-15-21)
	6	6000 050	Clip
3	1	2525 800-1	MOULDING PACKAGE, Fender Side (12-15-2)
	6	6001 642	Retainer
	6	6001 660	Retainer
	8	---- ---	Nut
	2	6001 603	Retainer
4	2	2578 630	ORNAMENT, Fender Side, V8 (12-15-21)
	4	6023 685	Nut
5	1	2584 536	MEDALLION PACKAGE, Radiator Grille (7-17-1)
	4	445 160	Nut
6	1	2528 323	LETTER, Hood Front Name, "P" (15-06-16)
	1	2528 324	"L"
	1	2528 325	"Y"
	1	2528 326	"M"
	1	2528 327	"O"
	1	2528 328	"U"
	1	2528 329	"T"
	1	2528 330	"H"
	16	6000 616	Nut, w/Retainer
7	1	2524 200	ORNAMENT, Hood Top (15-03-18)
	1	---- ---	Stud
8	1	2584 104	MOULDING PACKAGE, Windshield Outside Upper (23-23-65)
	8	6001 648	Retainer
9	1	2584 110-1	MOULDING PACKAGE, Windshield Outside Lower (23-23-65)
	10	6001 697	Retainer
	1	6001 794	Retainer, Right
	1	6001 795	Retainer, Left
	2	6024 895	Screw
10	1	2584 108-9	MOULDING PACKAGE, Windshield Outside Side (23-23-65)
	8	6001 648	Retainer
11	1	2529 264-5	MOULDING, Body Front Pillar Drain Trough (23-59-61)
12	1	2526 530-1	MOULDING, Quarter Window Outside Front, Prime (23-23-73)
	8	6023 247	Screw
13	1	2584 450-1	MOULDING PACKAGE, Quarter Window Outside Upper Primed (23-23-73)
	2	2529 938	Seal
	12	6001 837	Retainer
	12	6025 001	Nut and Washer
14	1	2526 148-9	MOULDING, Roof Side Drain Trough Rear (23-59-61)
15	1	2584 446-7	MOULDING PACKAGE, Rear Upper Pillar Outside (23-23-60)
	6	---- ---	Clip
16	1	2584 444-5	MOULDING PACKAGE, Rear Upper Pillar Tailgate Opening (23-23-61)
	6	6001 620	Clip
17	1	2584 421	MOULDING PACKAGE, Roof Outside Rear (23-23-42)
	8	6001 816	Clip
	1	2586 106	MOULDING PACKAGE, Roof Outside Rear (used with Outside Assist Handle) (23-23-42)
	8	6001 816	Clip
18	1	2528 795	MOULDING, Tailgate Outside Belt (23-23-61)
19	1	2524 233	NAME PLATE, Tailgate, Fury (23-54-11)
	3	152 259	Nut
20	1	2524 209	NUMERAL II, Tailgate (23-54-11)
	2	152 259	Nut
21	1	2584 095	MOULDING PACKAGE, Tailgate Outside Lower (23-23-61)
	10	6001 692	Retainer
	10	9417 621	Nut
22	1	2584 095	MOULDING PACKAGE, Tailgate Outside Upper (23-23-61)
	8	6001 692	Retainer
	8	---- ---	Nut
23	1	2584 096	MOULDING PACKAGE, Tailgate Name (23-23-61)
	7	6001 603	Retainer
	7	---- ---	Nut
24	1	2526 580-1	EXTENSION, Tailgate Name Moulding (23-23-61)
25	1	2584 530-1	MOULDING PACKAGE, Quarter Panel Tail Lamp (23-23-39)
	8	6001 809	Retainer
	4	6024 702	Seal
	8	---- ---	Nut
26	1	2584 414-5	MOULDING PACKAGE, Quarter Panel Outside (23-23-39)
	18	6001 642	Retainer
27	1	2584 641	MOULDING PACKAGE, Roof Top Outside Rear (use w/Two Tone Paint) (23-23-42)
	2	6001 591	Retainer
	2	116 000	Nut
	5	6001 709	Clip and Seal
28	1	2584 642-3	MOULDING PACKAGE, Roof Top Outside Rear Corner (use w/Two Tone Paint)(23-23-42)
	2	6001 498	Clip and Seal
29	1	2584 394-5	MOULDING PACKAGE, Rear Door Outside (23-23-33)
	8	6001 642	Retainer
	4	9417 621	Nut
	4	6001 675	Retainer
30	1	2584 388-9	MOULDING PACKAGE, Front Door Outside (23-23-32)
	8	6001 642	Retainer
	2	9417 621	Nut
	2	6001 675	Retainer

All Packages Include Attaching Parts

Part Type Code is Indicated in Parentheses

MyMopar.com

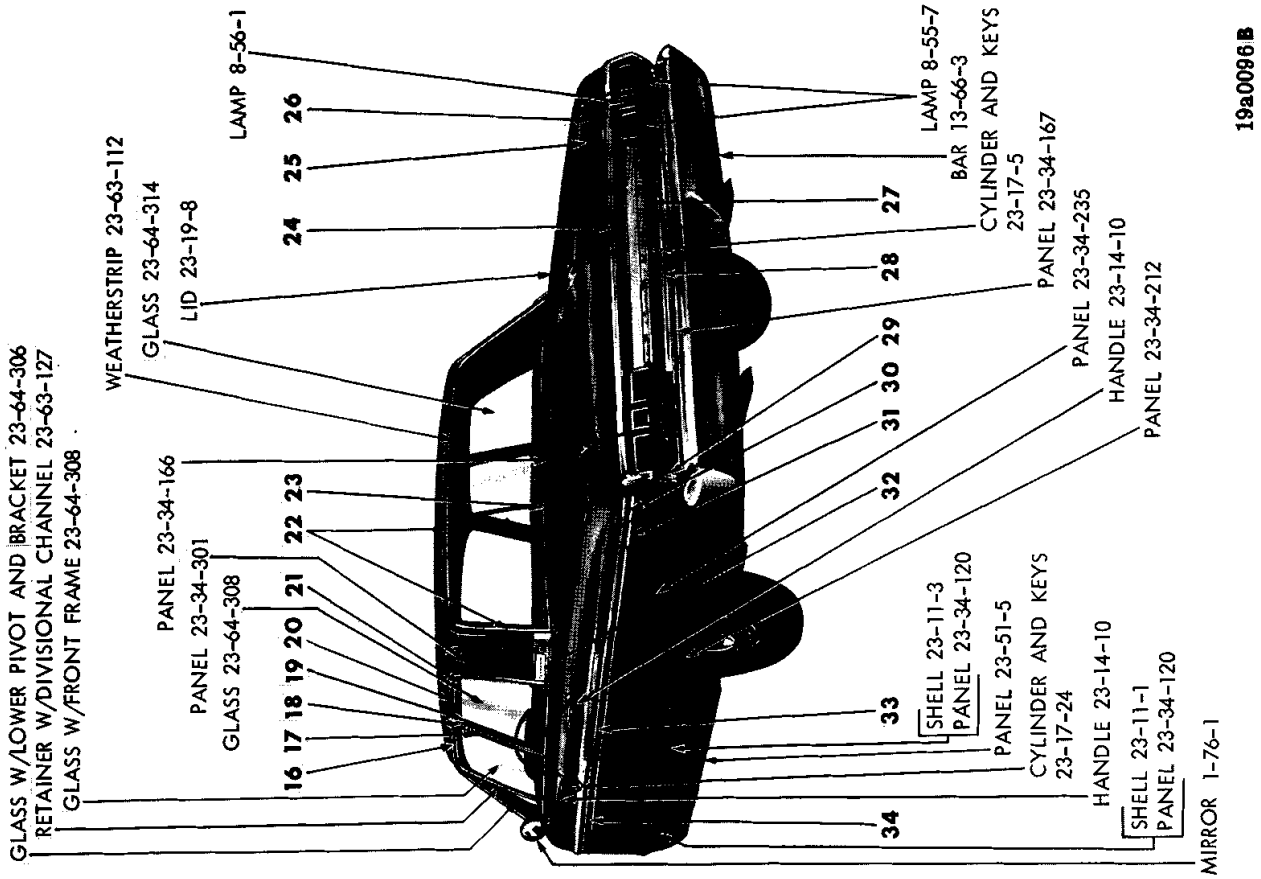

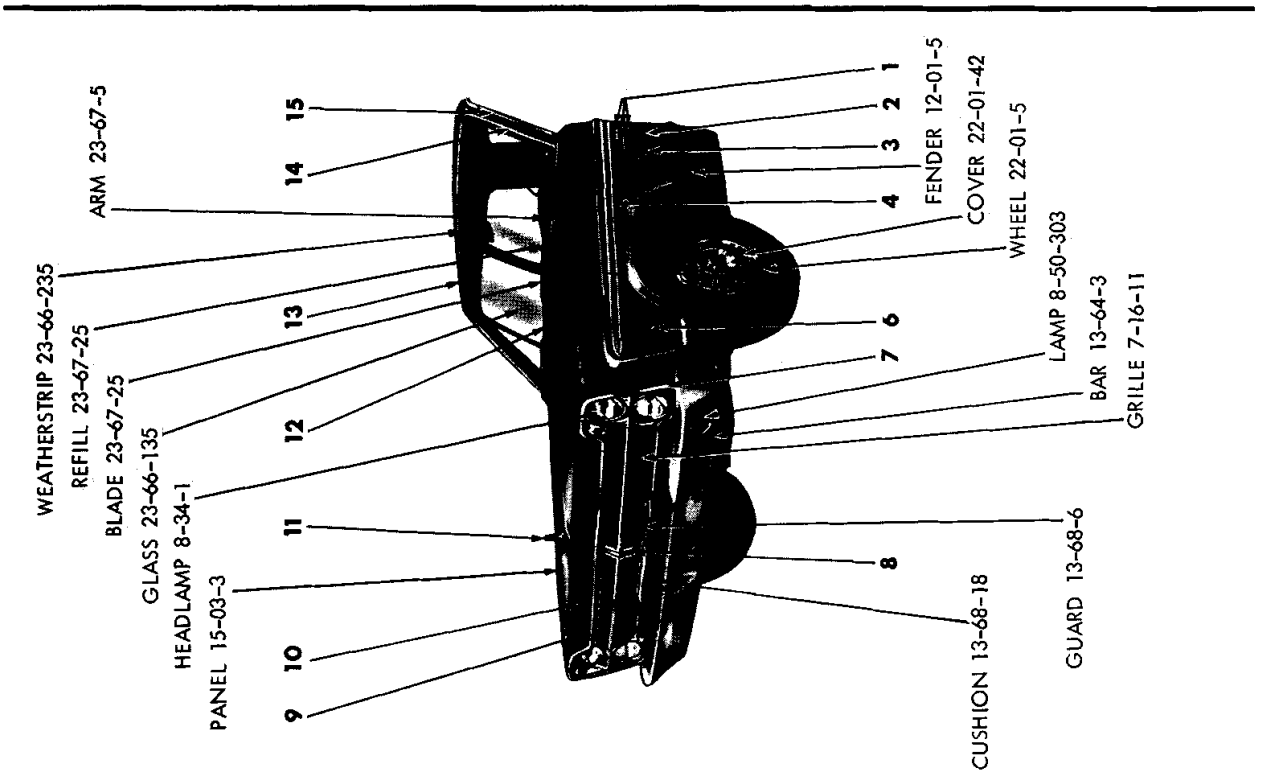

EXTERIOR VIEW - PLYMOUTH P-H 4 DOOR SEDAN

MyMopar.com

REF. NO.	QTY	PART NUMBER	DESCRIPTION
1	6	2524 908	LOUVER, Fender Side, Red (12-15-21)
	6	2524 909	White
	6	2524 910	Blue
	6	2524 830	Black
	18	6000 050	Clip
2	2	2524 226	NUMERAL 3, Fender Side (12-15-21)
	4	6000 050	Clip
3	2	2524 233	NAME PLATE, Fender Side (Fury) (12-15-21)
	6	6000 050	Clip
4	1	2525 806-7	MOULDING PACKAGE, Fender Side, Red (12-15-2)
	1	2525 808-9	White
	1	2525 810-1	Blue
	1	2525 814-5	Black
	8	6001 735	Retainer and Seal
	6	6001 726	Retainer 6 116 000 Nut
6	2	2578 630	ORNAMENT, Fender Side, V8 (12-15-21)
	2	2578 632	NAME PLATE, Fender Side, Commando V8 (12-15-21)
	4	6023 685	Nut
7	1	2524 206-7	MOULDING, Fender Front (12-15-2)
	8	6023 247	Screw
8	1	2584 536	MEDALLION PACKAGE, Radiator Grille (7-17-1)
	3	6024 202	Nut 4 445 160 Nut
9	1	2524 204-5	MOULDING, Hood Front, Outer (15-25-2)
	1	2524 203	Center (15-25-2)
10	1	2528 323	LETTER, Hood Front Name, "P" (15-06-16)
	1	2528 324	"L"
	1	2528 325	"Y" 1 2528 328 "U"
	1	2528 326	"M" 1 2528 329 "T"
	1	2528 327	"O" 1 2528 330 "H"
	16	6000 616	Nut, w/Retainer
11	1	2524 200	ORNAMENT, Hood Top (15-03-18)
	1	2579 764	ORNAMENT, Hood Top (383) (15-03-18)
	1	---- ---	Stud
12	1	2584 110-1	MOULDING PACKAGE, Windshield Outside Lower (23-23-65)
	10	6001 648	Retainer 2 6024 895 Screw
	1	6001 794	Retainer, Right
	1	6001 795	Retainer, Left
13	1	2584 104	MOULDING, Windshield Outside Upper (23-23-65)
	8	6001 648	Retainer
14	1	2584 108-9	MOULDING PACKAGE, Windshield Outside Side (23-23-65)
	8	6001 648	Retainer
15	1	2529 264-5	MOULDING, Body Front Pillar Drain (23-59-61)
16	1	2492 782-3	MOULDING, Front Door Window Frame Upper (23-23-32)
17	1	2492 784-5	MOULDING, Front Door Window Frame Rear (23-23-32)
18	1	2570 110-1	PANEL, Center Pillar Finish (23-23-16)
19	1	2492 796-7	MOULDING, Rear Door Window Frame Front (23-23-33)
20	1	2526 140-1	MOULDING, Roof Side Drain Trough (23-59-61)
21	1	2492 790-1	MOULDING, Rear Door Window Frame Upper (23-23-33)
22	1	2584 006-7	MOULDING PACKAGE, Rear Window Outside Side and Upper (23-23-52)(Note #1)
	12	6001 648	Retainer and Screw
	1	2807 134-5	MOULDING PACKAGE, Rear Window Outside Side and Upper (23-23-52)(Note #2)
23	1	2525 979	MOULDING PACKAGE, Rear Window Outside Lower (23-23-52) (Note #1)
	6	6001 648	Retainer and Screw
	1	2807 136-7	MOULDING PACKAGE, Rear Window Outside Lower (23-23-52) (Note #2)
24	1	2584 090	MOULDING PACKAGE, Deck Lid Upper (23-23-30)
	8	6001 692	Retainer 8 ---- --- Nut
25	1	2526 192	NAME PLATE, Deck Lid (23-19-114)
	3	152 259	Nut
26	1	2524 226	NUMERAL 3, Deck Lid (23-19-114)
	2	152 259	Nut
27	1	2573 828	PANEL, Deck Lid Finish (23-23-30)
	12	6001 692	Retainer 2 6026 214 Screw
	6	---- ---	Nut 6 9417 621 Nut
28	1	2584 091	MOULDING PACKAGE, Deck Lid Lower (23-23-30)
	6	6001 692	Retainer
	4	6001 690	Retainer 10 9417 621 Nut
29	1	2584 532-3	MOULDING PACKAGE, Quarter Panel Tail Lamp (23-23-39)
	8	6001 809	Retainer 8 ---- --- Nut
30	1	2584 364-5	MOULDING PACKAGE, Quarter Panel, Black (23-23-39)
	1	2584 366-7	White
	1	2584 368-9	Red
	1	2584 370-1	Blue
	6	6001 735	Retainer
	10	6001 726	Retainer
	10	6001 792	Retainer 6 6024 679 Nut
31	1	2584 408	MOULDING PACKAGE, Quarter Panel Filler Door (23-23-39)
	2	6025 561	Screw
32	1	2526 112-3	NAME PLATE, Roof Outside Belt (23-34-238)
	4	6022 006	Sealing Washer
	4	9411 618	Nut
33	1	2584 384-5	MOULDING PACKAGE, Rear Door, Black (23-23-33)
	1	2584 452-3	White
	1	2584 454-5	Red
	1	2584 456-7	Blue
	6	6001 735	Retainer
	4	6001 734	Retainer 4 9417 620 Nut
34	1	2584 342-3	MOULDING PACKAGE, Front Door, Black (23-23-32)
	1	2584 344-5	White
	1	2584 346-7	Red
	1	2584 348-9	Blue
	8	6001 735	Retainer
	4	6001 734	Retainer
	4	9417 621	Nut

NOTE 1: UP TO SERIAL NO. 210132
NOTE 2: AFTER SERIAL NO. 210132

All Packages Include Attaching Parts

Part Type Code is Indicated in Parentheses

EXTERIOR VIEW - PLYMOUTH P-H 4 DOOR SEDAN

MyMopar.com

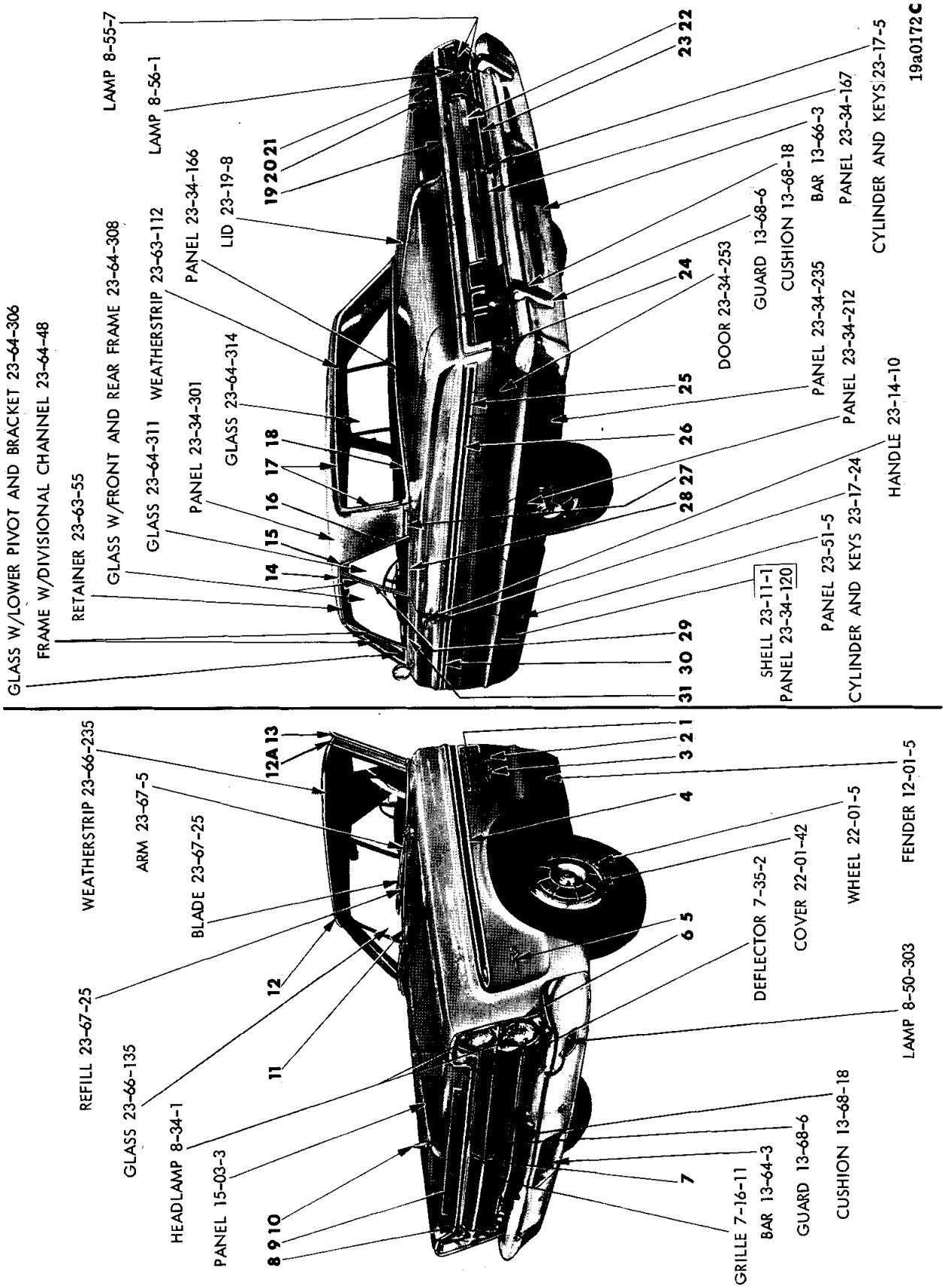

EXTERIOR VIEW - PLYMOUTH P-H 2 DOOR HARDTOP

MyMopar.com

REF. NO.	QTY	PART NUMBER	DESCRIPTION
1	6	2524 908	LOUVER, Fender Side, Red (12-15-21)
	6	2524 909	White 6 2524 830 Black
	6	2524 910	Blue 18 6000 050 Clip
2	2	2524 226	NUMERAL, Fender Side, III (12-15-21)
	4	6000 050	Clip
3	2	2524 233	NAME PLATE, Fender Side, Fury (12-15-21)
	6	6000 050	Clip
4	1	2525 806-7	MOULDING PACKAGE, Fender Side, Red (12-15-2)
	1	2525 808-9	White
	1	2525 810-1	Blue 1 2525 814-5 Black
	6	6001 735	Retainer and Seal
	4	6001 726	Retainer 4 ---- --- Nut
5	2	2578 632	NAME PLATE, Fender Side, Commando V8 (12-15-21)
	4	6023 685	Nut
6	1	2524 206-7	MOULDING, Fender Front (12-15-2)
	8	6023 247	Screw
7	1	2584 536	MEDALLION PACKAGE, Radiator Grille (7-17-1)
	4	445 160	Nut
8	1	2524 204-5	MOULDING, Hood Front, Outer (15-25-2)
	1	2524 203	Center (15-25-2)
9	1	2528 323	LETTER, Hood Front Name, "P" (15-06-16)
	1	2528 324	"L"
	1	2528 325	"Y" 1 2528 328 "U"
	1	2528 326	"M" 1 2528 329 "T"
	1	2528 327	"O" 1 2528 330 "H"
	16	6000 616	Nut, w/Retainer
10	1	2524 200	ORNAMENT, Hood Top (15-03-18)
	1	2579 764	ORNAMENT, Hood Top (383) (15-03-18)
	1	---- ---	Stud
11	1	2584 110-1	MOULDING PACKAGE, Windshield Outside Lower (23-23-65)
	10	6001 697	Retainer 2 6024 895 Screw
	1	6001 794	Retainer, Right
	1	6001 795	Retainer, Left
12	1	2584 099	MOULDING PACKAGE, Windshield Outside Upper (23-23-65)
	8	6001 648	Retainer
12A	1	2574 850-1	MOULDING, Body Frt. Pillar Trim (use w/Vinyl Roof)(23-23-14)
	2	6023 682	Screw
13	1	2584 106-7	MOULDING PACKAGE, Windshield Outside Side (23-23-65)
	8	6001 648	Retainer
14	1	2526 480-1	MOULDING, Roof Side Drain Trough Front (w/o Vinyl Roof) (23-59-61)
	1	2605 010-1	MOULDING, Roof Side Drain Trough Front (w/Vinyl Roof) (23-59-61)
15	1	2526 484-5	COVER, Roof Side Drain Trough Moulding Front (23-59-57)
16	1	2526 482-3	MOULDING, Roof Side Drain Trough Rear (w/o Vinyl Roof) (23-59-61)
	1	2605 012-3	MOULDING, Roof Side Drain Trough Rear (w/Vinyl Roof) (23-59-61)
17	1	2525 596-7	MOULDING PACKAGE, Rr. Wdo. Outside Upr. & Side (23-23-52) (Note #1)
	14	6001 648	Retainer and Screw
	1	2807 140-1	MOULDING PACKAGE, Rear Window Outside Upper & Side (23-23-52) (Note #2)
18	1	2525 595	MOULDING PACKAGE, Rear Window Outside Lower (23-23-52) (Note #1)
	7	6001 648	Retainer and Screw
	1	2807 138-9	MOULDING PACKAGE, Rear Window Outside Lower (23-23-52) (Note #2)
19	1	2584 090	MOULDING PACKAGE, Deck Lid Outside Upper (23-23-30)
	8	6001 692	Retainer 8 ---- --- Nut
20	1	2526 192	NAME PLATE, Deck Lid (Fury) (23-19-114)
	3	152 259	Nut
21	1	2524 226	NUMERAL "III", Deck Lid (23-19-114)
	2	152 259	Nut
22	1	2573 828	PANEL, Deck Lid Finish (23-23-30)
	12	6001 692	Retainer 2 6026 214 Screw
	6	---- ---	Nut 6 9417 621 Nut
23	1	2584 091	MOULDING PACKAGE, Deck Lid Outside Lower (23-23-30)
	6	6001 692	Retainer
	4	6001 690	Retainer 10 9417 621 Nut
24	1	2584 532-3	MOULDING PACKAGE, Quarter Outside Tail Lamp (23-23-39)
	8	6001 809	Retainer and Stud
	8	---- ---	Nut
25	1	2584 408	MOULDING PACKAGE, Quarter Panel Fuel Filler Door (23-23-39)
	2	6025 561	Screw
26	1	2584 354-5	MOULDING PACKAGE, Quarter Outside, Black (23-23-39)
	1	2584 360-1	Blue
	1	2584 358-9	Red
	1	2584 356-7	White
	12	6001 735	Retainer and Seal
	10	6001 726	Retainer and Stud
	10	6024 679	Nut
27	1	2584 422-3	MOULDING PACKAGE, Roof Outside Belt (23-23-42)
	4	---- ---	Washer 4 9411 618 Nut
28	1	2584 218-9	MOULDING PACKAGE, Quarter Outside Belt (23-23-39)
	12	6001 496	Retainer
29	1	2529 144-5	MOULDING, Quarter Window Glass Front (23-23-73)
30	1	2584 332-3	MOULDING PACKAGE, Door Outside, Black (23-23-32)
	1	2584 338-9	Blue
	1	2584 336-7	Red
	1	2584 334-5	White
	10	6001 735	Retainer and Seal
	2	6001 734	Retainer and Stud
	2	9417 621	Nut
31	1	2584 214-5	MOULDING PACKAGE, Door Outside Belt (23-23-32)
	16	6001 496	Retainer

NOTE 1: UP TO SERIAL NO. 210132
NOTE 2: AFTER SERIAL NO. 210132

All Packages Include Attaching Parts

Part Type Code is Indicated in Parentheses

EXTERIOR VIEW — PLYMOUTH P-H 2 DOOR HARDTOP

MyMopar.com

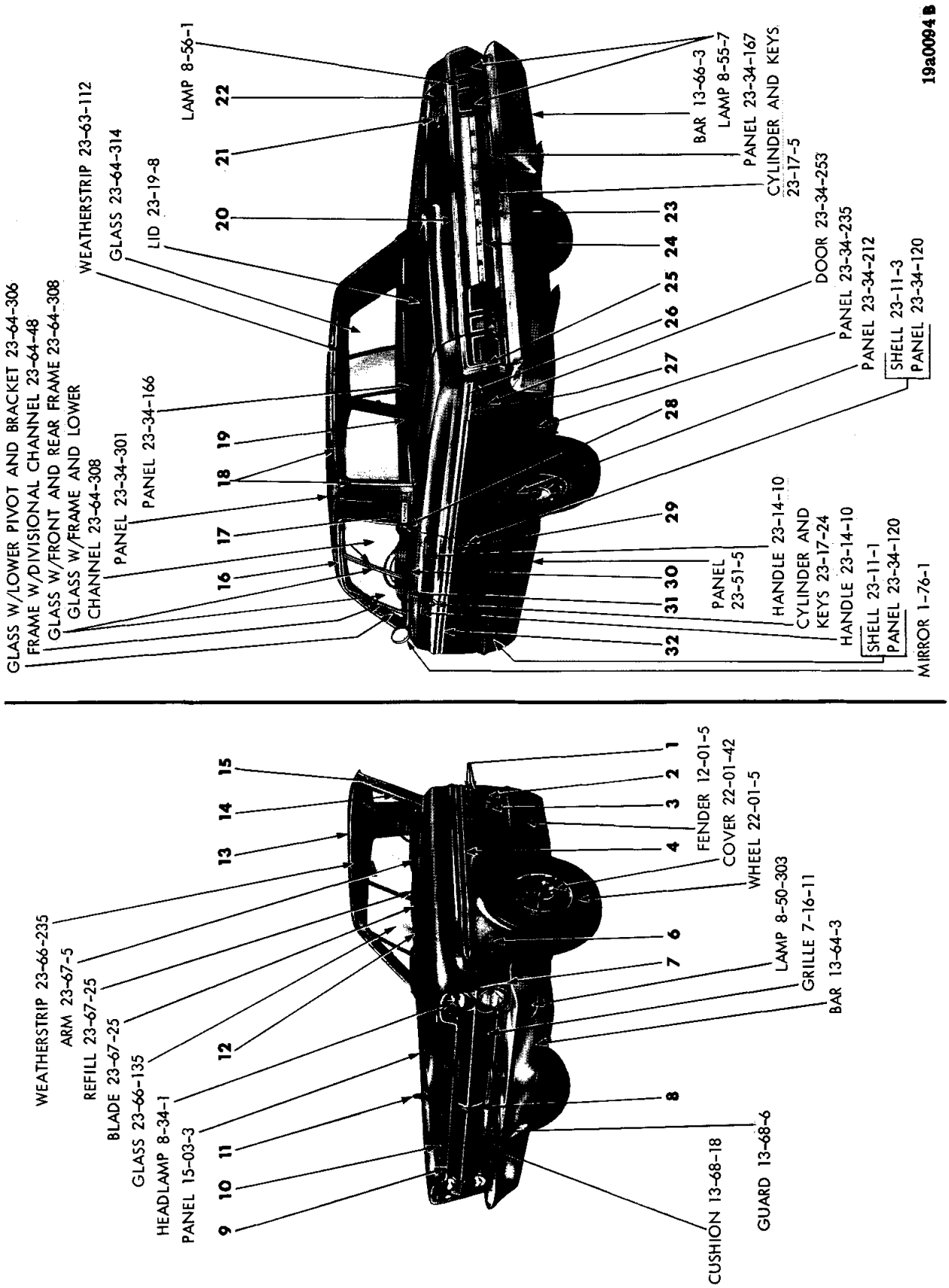

EXTERIOR VIEW - PLYMOUTH P-H 4 DOOR HARDTOP

MyMopar.com

REF. NO.	QTY	PART NUMBER	DESCRIPTION
1	6	2524 908	LOUVER, Fender Side, Red (12-15-21)
	6	2524 909	White 6 2524 830 Black
	6	2524 910	Blue 18 6000 050 Clip
2	2	2524 226	NUMERAL 3, Fender Side (12-15-21)
	4	6000 050	Clip
3	2	2524 233	NAME PLATE, Fender Side (Fury) (12-15-21)
	6	6000 050	Clip
4	1	2525 806-7	MOULDING PACKAGE, Fender Side Red (12-15-2)
	1	2525 808-9	White
	1	2525 810-1	Blue 1 2525 814-5 Black
	8	6001 735	Retainer and Seal
	6	6001 726	Retainer 6 116 000 Nut
6	2	2578 630	ORNAMENT, Fender Side, V8 (12-15-21)
	2	2578 632	NAME PLATE, Fender Side, Commando V8 (12-15-21)
	4	6023 685	Nut
7	1	2524 206-7	MOULDING, Fender Front (12-15-2)
	8	6023 247	Screw
8	1	2584 536	MEDALLION PACKAGE, Radiator Grille (7-17-1)
	3	6024 202	Nut 4 445 160 Nut
9	1	2524 204-5	MOULDING, Hood Front, Outer (15-25-2)
	1	2524 203	Center (15-25-2)
10	1	2528 323	LETTER, Hood Front Name, "P" (15-06-16)
	1	2528 324	"L" 1 2528 328 "U"
	1	2528 325	"Y" 1 2528 329 "T"
	1	2528 326	"M" 1 2528 330 "H"
	1	2528 327	"O" 16 6000 616 Nut
11	1	2524 200	ORNAMENT, Hood Top (15-03-18)
	1	2579 764	ORNAMENT, Hood Top (383) (15-03-18)
	1	---- ---	Stud
12	1	2584 110-1	MOULDING PACKAGE, Windshield Outside Lower (23-23-65)
	10	6001 697	Retainer 2 6024 895 Screw
	1	6001 794	Retainer, Right
	1	6001 795	Retainer, Left
13	1	2584 104	MOULDING PACKAGE, Windshield Outside Upper (23-23-65)
	8	6001 648	Retainer
14	1	2584 108-9	MOULDING PACKAGE, Windshield Outside Side (23-23-65)
	8	6001 648	Retainer
15	1	2529 264-5	MOULDING, Body Front Pillar Drain Trough (23-59-61)
16	1	2526 140-1	MOULDING, Roof Side Drain Trough (23-59-61)
17	1	2526 114-5	NAME PLATE, Roof Outside Belt (23-34-238)
	6	---- ---	Washer 6 9411 618 Nut
18	1	2584 006-7	MOULDING PACKAGE, Rear Window Outside Side & Upper (23-23-52) (Note #1)
	12	6001 648	Retainer and Screw
	1	2807 134-5	MOULDING PACKAGE, Rear Window Outside Side & Upper (23-23-52) (Note #2)
19	1	2525 979	MOULDING PACKAGE, Rear Window Outside Lower (23-23-52) (Note #1)
	6	6001 648	Retainer and Screw
	1	2807 138-9	MOULDING PACKAGE, Rear Window Outside Lower (23-23-52) (Note #2)
20	1	2584 090	MOULDING PACKAGE, Deck Lid Upper (23-23-30)
	8	6001 692	Retainer 8 ---- --- Nut
21	1	2526 192	NAME PLATE, Deck Lid (23-19-114)
	3	152 259	Nut
22	1	2524 226	NUMERAL, Deck Lid (23-19-114)
	2	152 259	Nut
23	1	2584 091	MOULDING PACKAGE, Deck Lid Lower (23-23-30)
	6	6001 692	Retainer
	4	6001 690	Retainer 16 9417 621 Nut
24	1	2573 828	PANEL, Deck Lid Finish (23-23-30)
	12	6001 692	Retainer 2 6026 214 Screw
	6	---- ---	Nut 6 9417 621 Nut
25	1	2584 532-3	MOULDING PACKAGE, Quarter Panel Tail Lamp (23-23-39)
	8	6001 809	Retainer 8 ---- --- Nut
26	1	2584 364-5	MOULDING PACKAGE, Quarter Panel, Black (23-23-39)
	1	2584 366-7	White
	1	2584 368-9	Red
	1	2584 370-1	Blue
	6	6001 735	Retainer
	10	6001 726	Retainer
	6	6001 792	Retainer 10 6024 679 Nut
27	1	2584 408	MOULDING PACKAGE, Quarter Panel Filler Door (23-23-39)
	2	6025 561	Screw
28	1	2571 176-7	ORNAMENT and WEATHER-STRIP, Rear Door Belt Outer Rear (23-11-23) (23-63-33)
	2	9416 628	Screw
	4	---- ---	Screw 4 6023 164 Nut
	1	2571 170-1	ORNAMENT and WEATHER-STRIP, Rear Door Belt Inner Rear (23-11-23) (23-63-33)
	2	456 867	Screw 4 6025 425 Screw
29	1	2584 384-5	MOULDING PACKAGE, Rear Door, Black (23-23-33)
	1	2584 452-3	White
	1	2584 454-5	Red
	1	2584 456-7	Blue
	6	6001 735	Retainer
	4	6001 734	Retainer 4 9417 621 Nut
30	1	2584 512-3	MOULDING PACKAGE, Rear Door Belt (23-23-33)
	10	6001 797	Clip
	4	---- ---	Screw 4 6023 164 Nut
31	1	2584 212-3	MOULDING PACKAGE, Front Door Belt (23-23-32)
	16	6001 496	Retainer
32	1	2584 342-3	MOULDING PACKAGE, Front Door, Black (23-23-32)
	1	2584 344-5	White
	1	2584 346-7	Red
	1	2584 348-9	Blue
	8	6001 735	Retainer
	4	6001 734	Retainer
	4	9417 621	Nut

NOTE 1: UP TO SERIAL NO. 210132
NOTE 2: AFTER SERIAL NO. 210132

All Packages Include Attaching Parts

Part Type Code is Indicated in Parentheses

EXTERIOR VIEW - PLYMOUTH P-H 4 DOOR HARDTOP

MyMopar.com

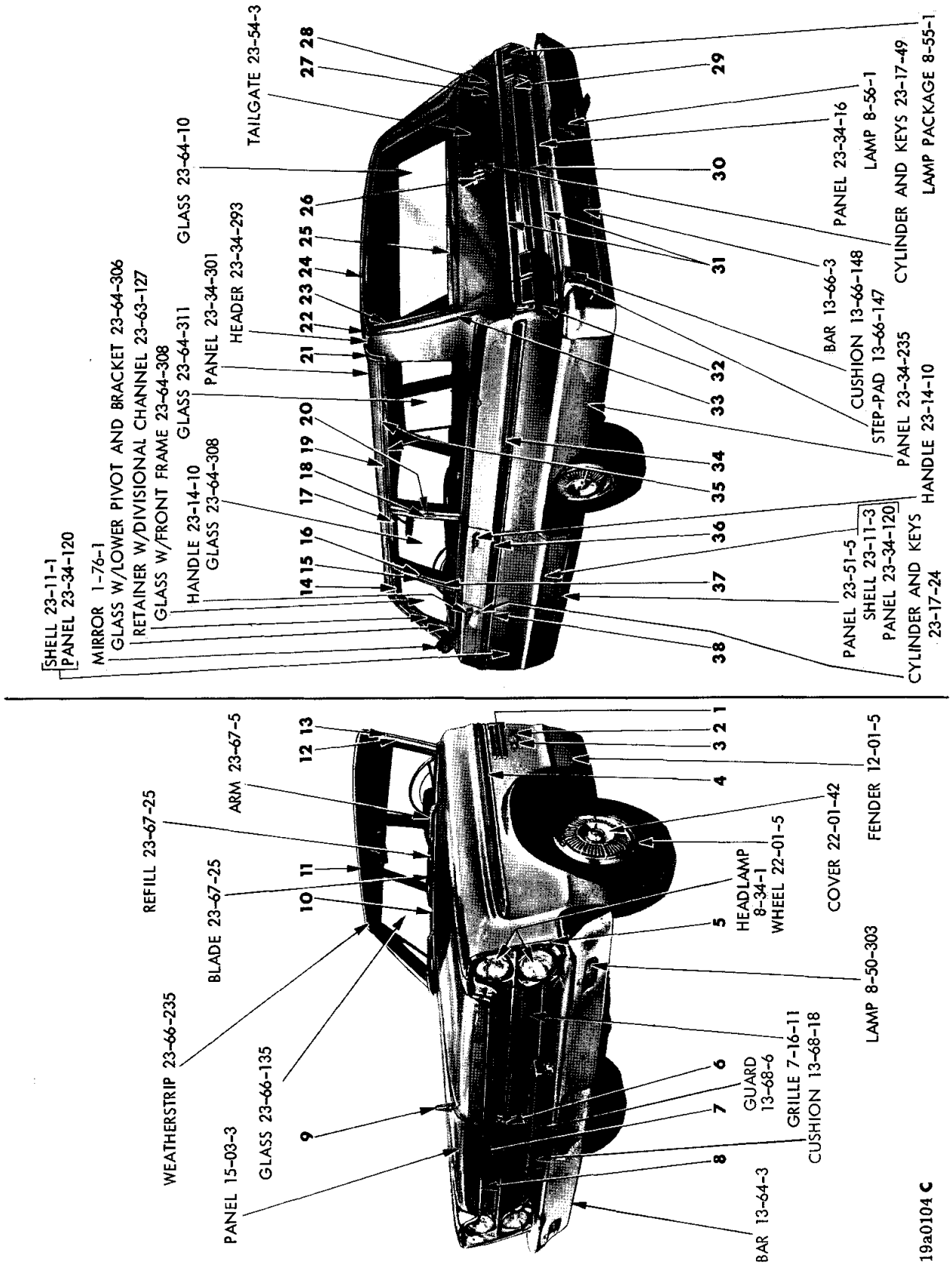

EXTERIOR VIEW - PLYMOUTH P-H 4 DOOR STATION WAGON

MyMopar.com

REF. NO.	QTY	PART NUMBER	DESCRIPTION
1	6	2524 908	LOUVER, Fender Side, Red (12-15-21)
	6	2524 909	White
	6	2524 830	Black
	6	2524 910	Blue
	18	6000 050	Clip
2	2	2524 226	NUMERAL, Fender Side, III (12-15-21)
	4	6000 050	Clip
3	2	2524 233	NAME PLATE, Fender Side, Fury (12-15-21)
	6	6000 050	Clip
4	1	2525 806-7	MOULDING PACKAGE, Fender Side, Red (12-15-2)
	1	2525 814-5	Black
	1	2525 810-1	Blue
	6	6001 735	Retainer
	4	6001 726	Retainer
	4	---- ---	Nut
5	1	2524 206-7	MOULDING, Fender Front (12-15-2)
	8	6023 247	Screw
6	1	2584 536	MEDALLION PACKAGE, Radiator Grille (7-17-1)
	4	6024 202	Nut
	4	445 160	Nut
7	1	2528 323	LETTER, Hood Front Name, "P" (15-06-16)
	1	2528 324	"L"
	1	2528 325	"Y"
	1	2528 326	"M"
	1	2528 327	"O"
	1	2528 328	"U"
	1	2528 329	"T"
8	1	2524 204-5	MOULDING, Hood Front, Outer (15-25-2)
	1	2524 203	Center (15-25-2)
	11	6023 247	Screw
9	1	2524 200	ORNAMENT, Hood Top (15-03-18)
	1	2579 764	ORNAMENT, Hood Top (383) (15-03-18)
	1	---- ---	Stud
10	1	2584 110-1	MOULDING PACKAGE, Windshield Outside Lower (23-23-65)
	10	6001 697	Retainer
	1	6001 794	Retainer, Right
	1	6001 795	Retainer, Left
11	1	2584 104	MOULDING PACKAGE, Windshield Outside Upper (23-23-65)
	8	6001 648	Retainer
12	1	2584 108-9	MOULDING PACKAGE, Windshield Outside Side (23-23-65)
	8	6001 648	Retainer
13	1	2529 264-5	MOULDING, Body Front Pillar Drain Trough (23-59-61)
14	1	2492 782-3	MOULDING, Front Door Window Frame Upper (23-23-32)
15	1	2492 784-5	MOULDING, Front Door Window Frame Rear (23-23-32)
16	1	2492 796-7	MOULDING, Rear Door Window Frame Front (23-23-33)
17	1	2492 806-7	MOULDING, Rear Door Window Frame Upper (23-23-33)
18	1	2492 808-9	MOULDING, Rear Door Window Frame Rear (23-23-33)

All Packages Include Attaching Parts

Part Type Code is Indicated in Parentheses

REF. NO.	QTY	PART NUMBER	DESCRIPTION
19	1	2526 148-9	MOULDING, Roof Side Drain Trough (23-59-61)
20	1	2528 562-3	MOULDING, Quarter Window Outside Front (23-23-73)
	8	6023 247	Screw
21	1	2584 642-3	MOULDING PACKAGE, Roof Top Outside Rear Corner (use w/Two Tone Paint) (23-23-42)
	2	6001 498	Clip and Seal
22	1	2584 641	MOULDING PACKAGE, Roof Top Outside Rear (use w/Two Tone Paint) (23-23-42)
	5	6001 709	Clip and Seal
	2	6001 591	Retainer
	2	116 000	Nut
23	1	2584 444-5	MOULDING PACKAGE, Rear Upper Pillar Tailgate Opening (23-23-60)
	6	6001 620	Clip
24	1	2584 421	MOULDING PACKAGE, Roof Outside Rear (23-23-42)
	8	6001 816	Clip
	1	2586 106	MOULDING PACKAGE, Roof Outside Rear (used w/Outside Assist Handle) (23-23-42)
	8	6001 816	Clip
25	1	2528 795	MOULDING, Tailgate Outside Belt (23-23-61)
26	1	2486 686	ORNAMENT, Tailgate Window Regulator Outside Panel (23-54-11)
	3	---- ---	Stud
27	1	2524 233	NAME PLATE, Tailgate (Fury) (23-54-11)
	3	152 229	Nut
28	1	2524 226	NUMERAL III, Tailgate (23-54-11)
	2	152 229	Nut
29	1	2584 096	MOULDING PACKAGE, Tailgate Name (23-23-61)
	8	6001 603	Retainer
	8	---- ---	Nut
30	1	2526 202	PANEL, Tailgate Outside Finish (23-23-77)
31	2	2584 095	MOULDING PACKAGE, Tailgate Outside Upper and Lower (23-23-61)
	8	6001 696	Retainer, Stud and Seal
	8	---- ---	Nut
32	1	2584 530-1	MOULDING PACKAGE, Quarter Panel Tail Lamp (23-23-39)
	8	6001 809	Retainer
	8	6001 817	Clip
33	1	2584 446-7	MOULDING PACKAGE, Rear Upper Pillar Outside (23-23-60)
	6	---- ---	Clip
34	1	2584 374-5	MOULDING PACKAGE, Quarter Panel, Black (23-23-39)
	1	2584 376-7	White
	1	2584 378-9	Red
	1	2584 380-1	Blue
	8	6001 735	Retainer
	6	6001 792	Retainer
	4	6001 793	Retainer

CONTINUED ON NEXT PAGE

EXTERIOR VIEW - PLYMOUTH P-H 4 DOOR STATION WAGON

MyMopar.com

REF. NO.	QTY	PART NUMBER	DESCRIPTION
35	1	2584 450-1	MOULDING PACKAGE, Quarter Window Outside Upper (Prime)(23-23-73)
	12	6025 001	Nut and Washer
	12	6001 837	Retainer
	2	2529 938	Seal
	1	2528 584-5	COVER PACKAGE, Qtr. Wdo. Outside Upr. Mldg. (Stainless Steel) (23-23-73)
	12	6025 001	Nut and Washer
	12	6001 837	Retainer
	2	2529 938	Seal
36	1	2584 386-7	MOULDING PACKAGE, Rear Door, Black (23-23-33)
	1	2584 458-9	White
	1	2584 460-1	Red
	1	2584 462-3	Blue
	8	6001 735	Retainer
	4	6001 734	Retainer
	4	9417 621	Nut
37	1	2570 110-1	PANEL, Body Center Pillar Finish (23-23-16)
	4	6023 247	Screw
38	1	2584 342-3	MOULDING PACKAGE, Front Door, Black (23-23-32)
	1	2584 344-5	White
	1	2584 346-7	Red
	1	2584 348-9	Blue
	8	6001 735	Retainer
	4	6001 734	Retainer
	4	9417 621	Nut

All Packages Include Attaching Parts

Part Type Code is Indicated in Parentheses

EXTERIOR VIEW - PLYMOUTH P-H 4 DOOR STATION WAGON

MyMopar.com

NOTES

MyMopar.com

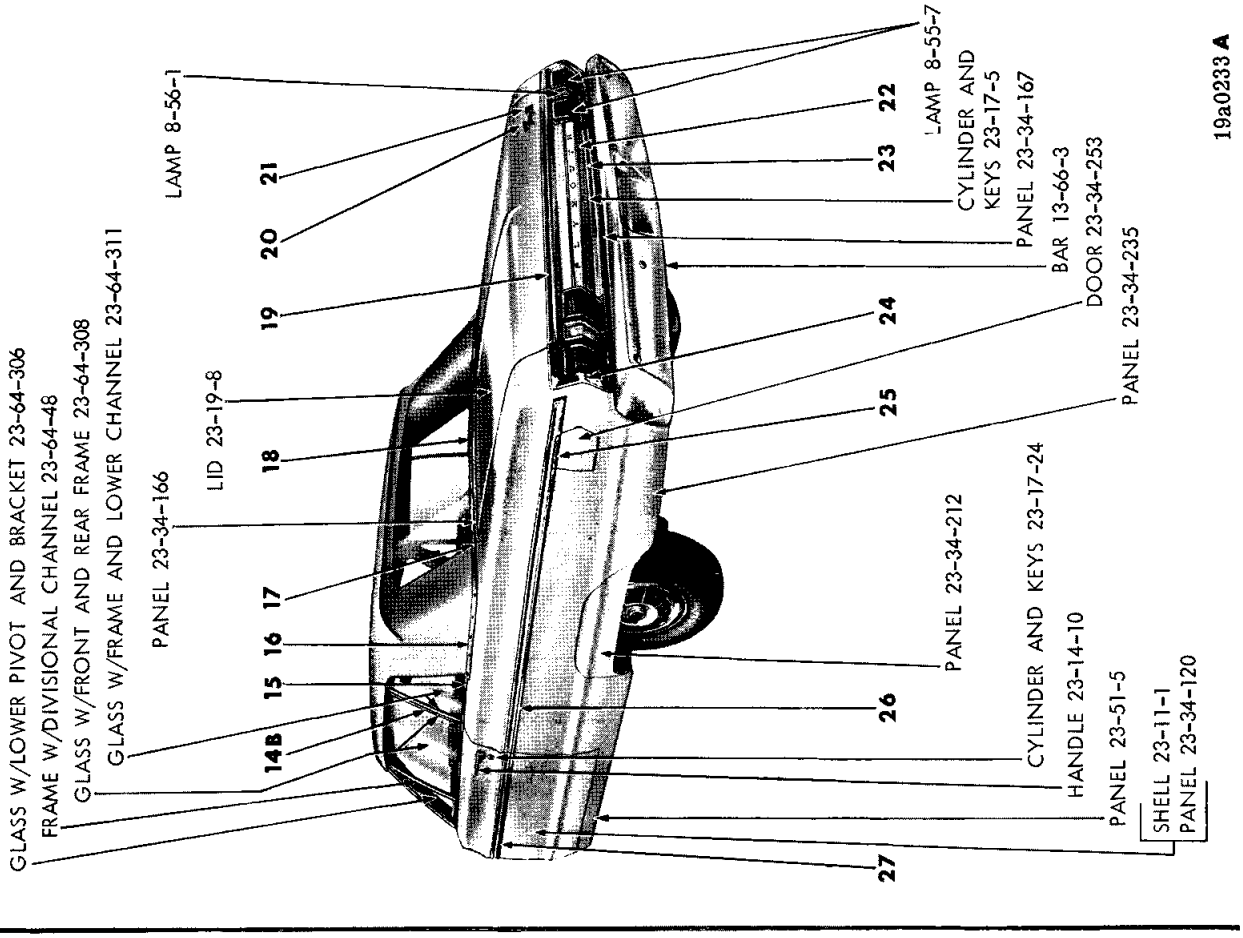

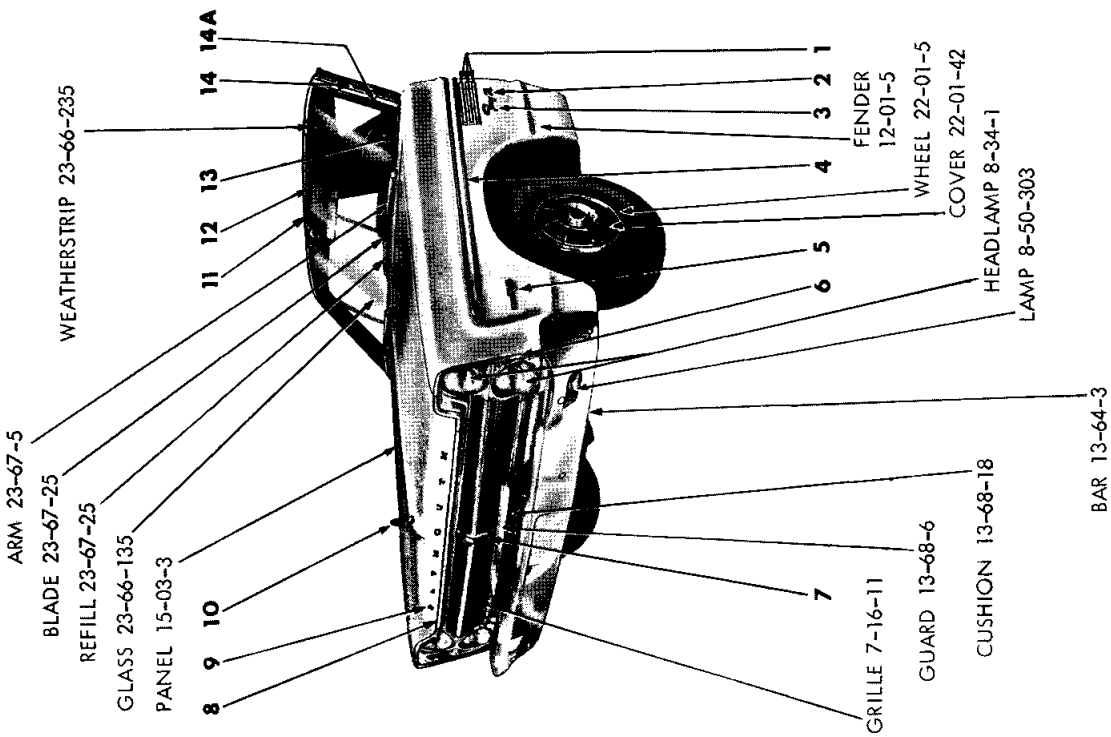

EXTERIOR VIEW - PLYMOUTH P-H CONVERTIBLE COUPE

MyMopar.com

REF. NO.	QTY	PART NUMBER	DESCRIPTION
1	6	2524 908	LOUVER, Fender Side, Red (12-15-21)
	6	2524 909	White
	6	2524 910	Blue
	6	2524 830	Black 18 6000 050 Clip
2	2	2524 226	NUMERAL, Fender Side, III (12-15-21)
	4	6000 050	Clip
3	2	2524 233	NAME PLATE, Fender Side, Fury (12-15-21)
	6	6000 050	Clip
4	1	2525 806-7	MOULDING PACKAGE, Fender Side, Red (12-15-2)
	1	2525 808-9	White
	1	2525 810-1	Blue 1 2525 814-5 Black
	6	6001 735	Retainer
	4	6001 726	Retainer 4 ---- --- Nut
5	2	2578 632	NAME PLATE, Fender Side, Commando V8 (12-15-21)
	4	6023 685	Nut
6	1	2524 206-7	MOULDING, Fender Front (12-15-2)
	8	6023 247	Screw
7	1	2584 536	MEDALLION PACKAGE, Radiator Grille (7-17-1)
	4	445 160	Nut
8	1	2524 204-5	MOULDING, Hood Front, Outer (15-25-2)
	1	2524 203	Center (15-25-2)
	11	6023 247	Screw 2 6025 239 Screw
9	1	2528 323	LETTER, Hood Front Name, "P" (15-06-16)
	1	2528 324	"L"
	1	2528 325	"Y" 1 2528 328 "U"
	1	2528 326	"M" 1 2528 329 "T"
	1	2528 327	"O" 1 2528 330 "H"
	16	6000 616	Nut, w/Retainer
10	1	2524 200	ORNAMENT, Hood Top (15-03-18)
	1	2579 764	ORNAMENT, Hood Top (383) (15-03-18)
	1	---- ---	Stud
11	1	2484 602-3	MOULDING, Windshield Outside Upper Header (23-23-65)
	5	6025 132	Screw
12	1	2584 099	MOULDING PACKAGE, Windshield Outside Upr. (23-23-65)
	8	6001 648	Retainer
13	1	2584 110-1	MOULDING, Windshield Outside Lower (23-23-65)
	10	6001 697	Retainer 2 6024 895 Screw
	1	6001 794	Retainer, Right
	1	6001 795	Retainer, Left
14	1	2481 844-5	MOULDING, Body Front Upper Pillar Outside (23-23-14)
	8	9415 214	Screw
	1	2528 660-1	EXTENSION, Body Front Pillar Outside Mldg. Lwr. (23-23-14)
14A	1	2584 106-7	MOULDING PACKAGE, Windshield Outside Side (23-23-65)
	8	6001 648	Retainer
14B	1	2529 096-7	MOULDING, Quarter Window Glass Front (23-23-73)
15	1	2584 220-1	MOULDING PACKAGE, Quarter Outside Belt (23-23-39)
	6	6001 496	Retainer
	2	---- ---	Screw

All Packages Include Attaching Parts

REF. NO.	QTY	PART NUMBER	DESCRIPTION
16	1	2584 086-7	MOULDING PACKAGE, Quarter Outside Belt Rear (23-23-39)
	2	2094 380	Fastener
	2	---- ---	Screw
17	1	2584 082-3	MOULDING PACKAGE, Deck Opening Upper (23-23-31)
	20	2094 380	Fastener
18	1	2584 081	CAP PACKAGE, Deck Opening Upper Panel Moulding (23-23-41)
	1	2094 380	Screw
19	1	2584 090	MOULDING PACKAGE, Deck Lid Outside Upper (23-23-30)
	8	6001 692	Retainer
	8	---- ---	Nut
20	1	2526 192	NAME PLATE, Deck Lid, Fury (23-19-114)
	3	152 259	Nut
21	1	2524 226	NUMERAL III, Deck Lid (23-19-114)
	2	152 259	Nut
22	1	2573 828	PANEL, Deck Lid Finish (23-23-30)
	12	6001 692	Retainer
	6	---- ---	Nut
	6	9417 621	Nut
23	1	2584 091	MOULDING PACKAGE, Deck Lid Outside Lower (23-23-30)
	6	6001 692	Retainer
	4	6001 690	Retainer
	10	9417 621	Nut 2 6026 214 Screw
24	1	2584 532-3	MOULDING PACKAGE, Quarter Panel Tail Lamp (23-23-39)
	8	6001 809	Retainer
	8	---- ---	Nut
25	1	2584 408	MOULDING PACKAGE, Quarter Panel Fuel Filler Door (23-23-39)
	2	6025 561	Screw
26	1	2584 354	MOULDING PACKAGE, Quarter Panel Right, Black (23-23-39)
	1	2584 355	Left, Black
	1	2584 360	Right, Blue
	1	2584 361	Left, Blue
	1	2584 358	Right, Red
	1	2584 359	Left, Red
	1	2584 356	Right, White
	1	2584 357	Left, White
	12	6001 735	Retainer
	10	6024 679	Nut
	10	6001 726	Retainer
27	1	2584 332-3	MOULDING PACKAGE, Door Outside, Black (23-23-32)
	1	2584 338-9	Blue
	1	2584 336-7	Red
	1	2584 334-5	White
	10	6001 735	Retainer
	2	6001 734	Retainer
	2	9417 621	Nut

Part Type Code is Indicated in Parentheses

EXTERIOR VIEW PLYMOUTH P-H CONVERTIBLE COUPE

MyMopar.com

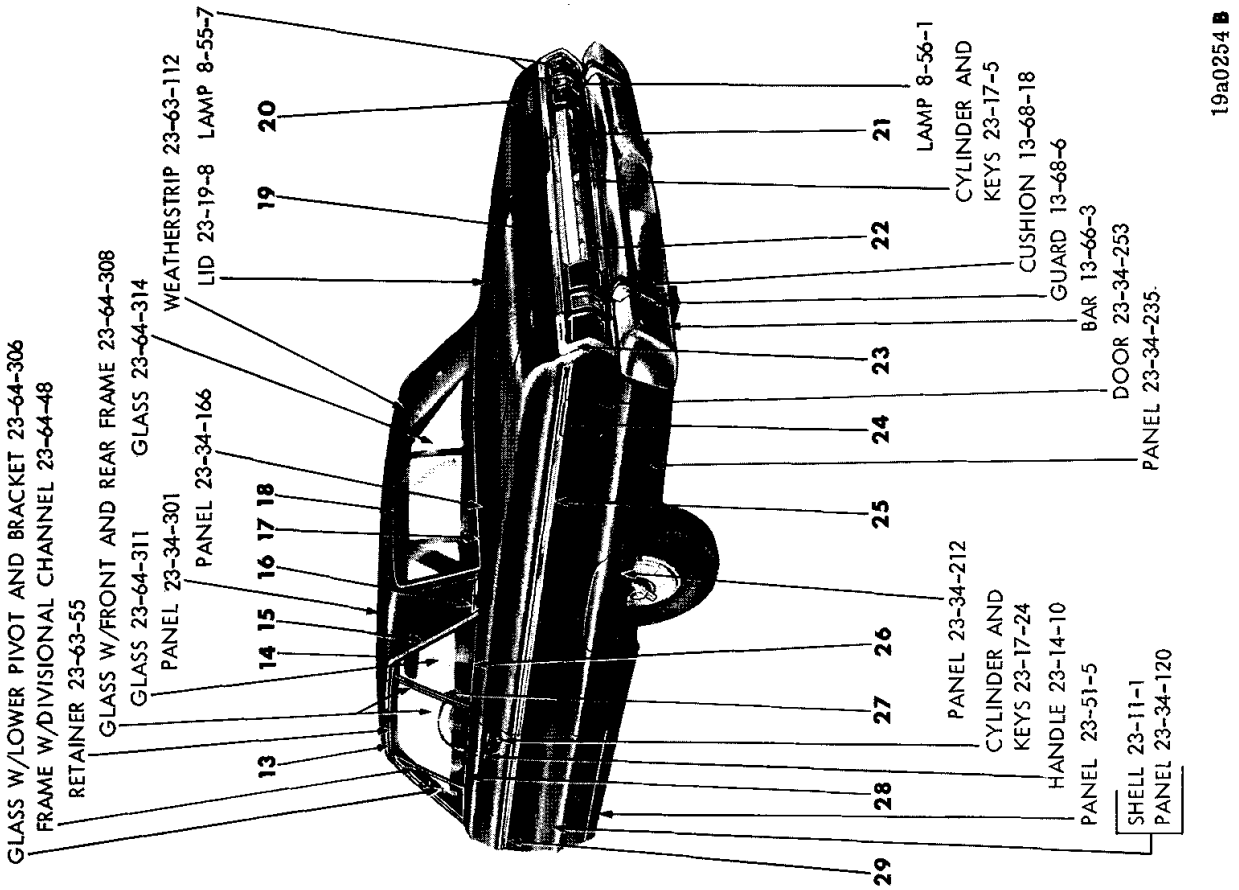

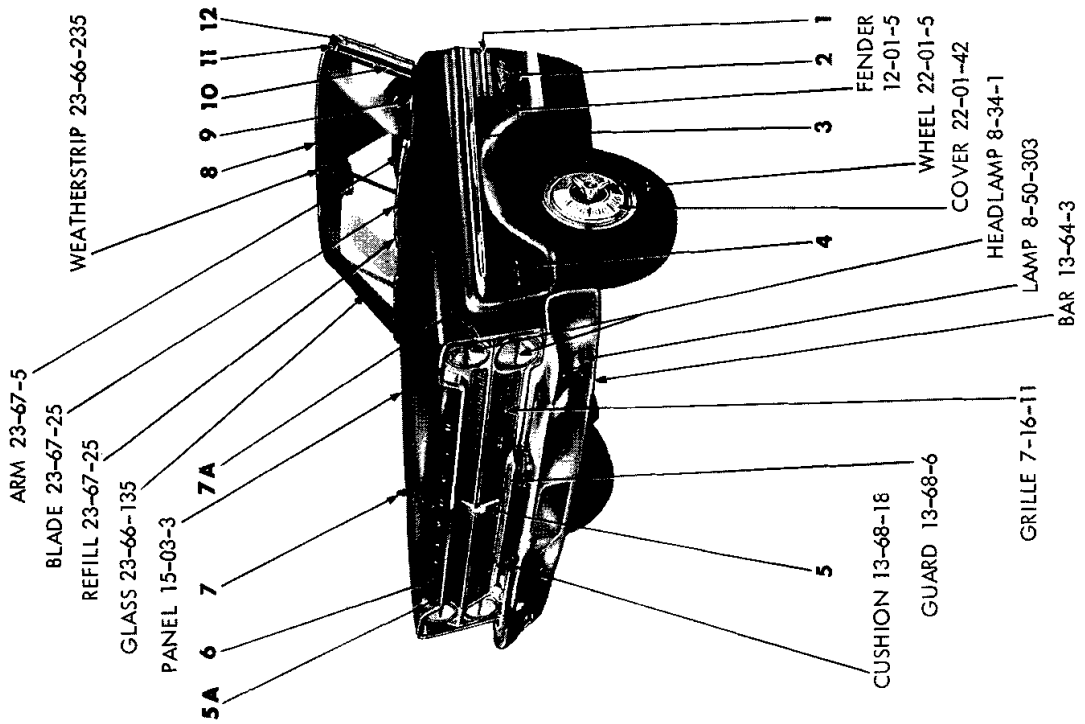

EXTERIOR VIEW - PLYMOUTH P-P 2 DOOR HARDTOP

MyMopar.com

REF. NO.	QTY	PART NUMBER	DESCRIPTION
1	2	2524 827	LOUVER, Fender Side, Red (12-15-21)
	2	2524 828	White
	2	2524 829	Blue
	6	6000 050	Clip
2	2	2422 955	NAME PLATE, Fender Side, Sport Fury (12-15-21)
	8	6000 050	Clip
3	1	2525 804-5	MOULDING PACKAGE, Fender Side, w/Insert (12-15-2)
	6	6001 735	Retainer and Seal
	4	6001 726	Retainer
	4	---- ---	Nut
4	2	2578 632	NAME PLATE, Fender Side, Commando V8 (12-15-21)
	4	6023 685	Nut
5	1	2584 537	MEDALLION PACKAGE, Radiator Grille (7-17-1)
	4	445 160	Nut
5A	1	2524 204-5	MOULDING, Hood Front, Outer (15-25-2)
	1	2524 203	Center (15-25-2)
	2	6025 239	Screw
	11	6023 247	Screw
6	1	2528 323	LETTER, Hood Front Name, "P" (15-06-16)
	1	2528 324	"L"
	1	2528 325	"Y"
	1	2528 326	"M"
	1	2528 327	"O"
	1	2528 328	"U"
	1	2528 329	"T"
	1	2528 330	"H"
	16	6000 616	Nut w/Washer
7	1	2524 200	ORNAMENT, Hood Top, w/o Space for Cu. In. Engine Displacement (15-03-18)
	1	2578 737	ORNAMENT, w/Decal, Hood Top, w/383 Cu. In. Decal
	1	2578 739	ORNAMENT, w/Decal, Hood Top, w/426H Cu. In. Decal
7A	1	2524 206-7	MOULDING PACKAGE, Fender Front (12-15-2)
	8	6023 247	Screw
8	1	2584 099	MOULDING PACKAGE, Windshield Outside Upper (23-23-65)
	8	6001 648	Retainer
9	1	2584 110-1	MOULDING PACKAGE, Windshield Outside Lower (23-23-65)
	10	6001 697	Retainer
	2	6024 895	Screw
	1	6001 794	Retainer, Right
	1	6001 795	Retainer, Left
10	1	2584 106-7	MOULDING PACKAGE, Windshield Outside Side (23-23-65)
	8	6001 648	Retainer
11	1	2574 850-1	MOULDING, Body Front Pillar Trim (use w/Vinyl Roof) (23-23-14)
	2	6023 682	Screw
12	1	2528 002-3	MOULDING, Body Front Pillar Drain Trough (use w/o Vinyl Roof) (23-59-61)
13	1	2526 480-1	MOULDING, Roof Side Drain Front (use w/Vinyl Roof) (23-59-61) (Note #1)
	1	2605 010-1	MOULDING, Roof Side Drain Trough Front (use w/Vinyl Roof) (23-59-61) (Note #2)
	1	2573 230-1	MOULDING, Roof Side Drain Trough Front & Rear (use w/o Vinyl Roof) (23-59-61)
14	1	2526 484-5	COVER, Roof Side Drain Trough Moulding Front (use w/Vinyl Roof) (23-59-57)
15	1	2526 482-3	MOULDING, Roof Side Drain Trough Rear (use w/Vinyl Roof) (23-59-61) (Note #1)
	1	2605 012-3	MOULDING, Roof Side Drain Trough Rear (use w/Vinyl Roof) (23-59-61) (Note #2)
16	1	2584 422-3	MOULDING PACKAGE, Roof Outside Belt (use w/Vinyl Roof) (23-23-42)
	1	2584 464-5	MOULDING PACKAGE, Roof Outside Belt (use w/o Vinyl Roof) (23-23-42)
	4	---- ---	Washer
	4	9411 618	Nut
17	1	2525 595	MOULDING PACKAGE, Rear Window Outside Lower (23-23-52) (Note #3)
	7	6001 648	Retainer
	1	2807 140-1	MOULDING PACKAGE, Rear Window Outside Upper and Side (23-23-52) (Note #4)
18	1	2525 596-7	MOULDING PACKAGE, Rear Window Outside Upper and Side (23-23-52) (Note #3)
	14	6001 648	Retainer
	1	2807 138-9	MOULDING PACKAGE, Rear Window Outside Lower (23-23-52) (Note #4)
19	1	2584 090	MOULDING PACKAGE, Deck Lid Outside Upper (23-23-30)
	8	6001 692	Retainer
	8	---- ---	Nut
20	1	2526 194	NAME PLATE, Deck Lid, Sport Fury (23-19-114)
	5	152 259	Nut
21	1	2584 091	MOULDING PACKAGE, Deck Lid Outside Lower (23-23-30)
	6	6001 692	Retainer
	4	6001 690	Retainer
	10	9417 621	Nut
22	1	2526 199	PANEL, Deck Lid Finish (23-23-30)
	12	6001 692	Retainer
	6	---- ---	Nut
	6	9417 621	Nut

NOTE 1: USE W/VINYL RETAINER
NOTE 2: USE W/O VINYL RETAINER
NOTE 3: UP TO SERIAL NO. 210132
NOTE 4: AFTER SERIAL NO. 210132

CONTINUED ON NEXT PAGE

All Packages Include Attaching Parts

Part Type Code is Indicated in Parentheses

EXTERIOR VIEW - PLYMOUTH P-P 2 DOOR HARDTOP

MyMopar.com

REF. NO.	QTY	PART NUMBER	DESCRIPTION
23	1	2584 532-3	MOULDING PACKAGE, Quarter Panel Tail Lamp (23-23-39)
	8	6001 809	Retainer
	8	---- ---	Nut
24	1	2584 408	MOULDING PACKAGE, Quarter Panel Fuel Filler Door (23-23-39)
	2	6025 561	Screw
25	1	2584 352	MOULDING PACKAGE, Quarter Panel Right (23-23-39)
	6	6001 735	Retainer
	5	6001 726	Retainer
	5	6024 679	Nut
	1	2584 353	MOULDING PACKAGE, Quarter Panel Left (23-23-39)
	6	6001 735	Retainer
	5	6001 726	Retainer
	5	6024 679	Nut
26	1	2584 218-9	MOULDING PACKAGE, Quarter Panel Belt (23-23-39)
	12	6001 496	Retainer
27	1	2529 144-5	MOULDING, Quarter Window Glass Front (23-23-73)
28	1	2584 214-5	MOULDING PACKAGE, Door Outside Belt (23-23-32)
	16	6001 496	Retainer
	2	---- ---	Retainer
29	1	2584 330-1	MOULDING PACKAGE, Door Outside (23-23-32)
	10	6001 735	Retainer
	2	6001 734	Retainer
	2	9417 621	Nut

All Packages Include Attaching Parts

Part Type Code is Indicated in Parentheses

EXTERIOR VIEW - PLYMOUTH P-P 2 DOOR HARDTOP

MyMopar.com

NOTES

MyMopar.com

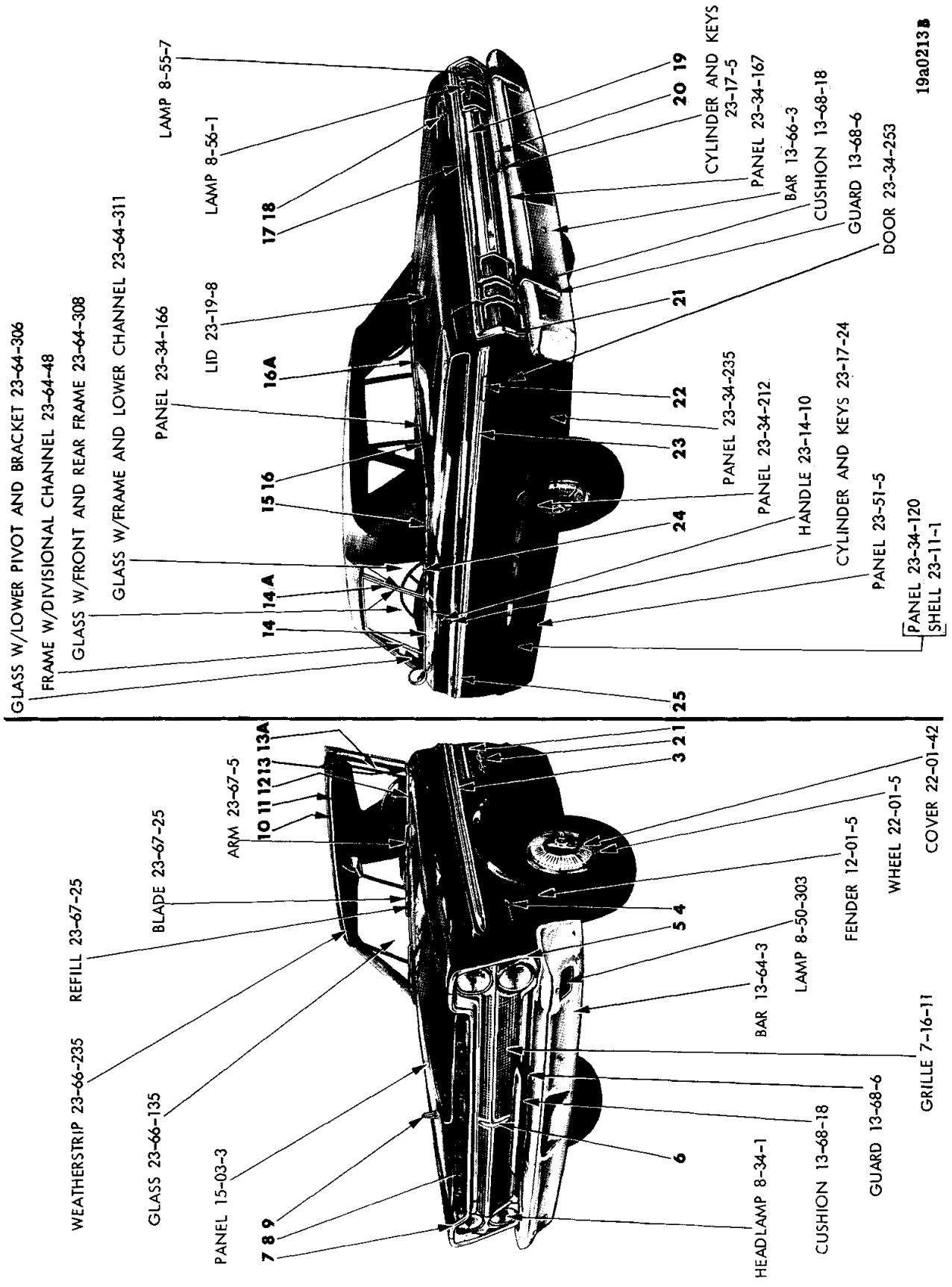

EXTERIOR VIEW - PLYMOUTH P2-P CONVERTIBLE COUPE

MyMopar.com

REF. NO.	QTY	PART NUMBER	DESCRIPTION
1	2	2524 827	LOUVER, Fender Side, Red (12-15-21)
	2	2524 828	White
	2	2524 829	Blue
	6	6000 050	Clip
2	2	2422 955	NAME PLATE, Fender Side, Sport Fury (12-15-21)
	8	6000 050	Clip
3	1	2525 804-5	MOULDING PACKAGE, Fender Side, w/Insert (12-15-2)
	6	6001 735	Retainer
	4	6001 726	Retainer 4 ---- --- Nut
4	2	2578 632	NAME PLATE, Fender Side, Commando V8 (12-15-21)
	4	6023 685	Nut
5	1	2524 206-7	MOULDING PACKAGE, Fender Front (12-15-2)
	8	6023 247	Screw
6	1	2584 537	MEDALLION PACKAGE, Radiator Grille (7-17-1)
	4	445 160	Nut
7	1	2524 204-5	MOULDING, Hood Front, Outer (15-25-2)
	1	2524 203	Center (15-25-2)
	2	6025 239	Screw 11 6023 247 Screw
8	1	2528 323	LETTER, Hood Front Name, "P" (15-06-16)
	1	2528 324	"L"
	1	2528 325	"Y" 1 2528 328 "U"
	1	2528 326	"M" 1 2528 329 "T"
	1	2528 327	"O" 1 2528 330 "H"
	16	6000 616	Nut, w/Retainer
9	1	2524 200	ORNAMENT, Hood Top (15-03-18)
	1	2579 764	ORNAMENT, Hood Top (383) (15-03-18)
	1	---- ---	Stud
10	1	2584 099	MOULDING PACKAGE, Windshield Outside Upper (23-23-65)
	8	6001 648	Retainer
11	1	2484 602-3	MOULDING, Windshield Outside Upper Header (23-23-65)
	5	6025 132	Screw
12	1	2584 110-1	MOULDING PACKAGE, Windshield Outside Lower (23-23-65)
	10	6001 697	Retainer 2 6024 895 Screw
	1	6001 794	Retainer, Right
	1	6001 795	Retainer, Left
13	1	2481 844-5	MOULDING, Body Front Upper Pillar Outside (23-23-14)
	8	9415 214	Screw
	1	2528 660-1	EXTENSION, Body Front Pillar Outside Mldg. Lwr. (23-23-14)
13A	1	2584 106-7	MOULDING PACKAGE, Windshield Outside Side (23-23-65)
	8	6001 648	Retainer
14	1	2584 214-5	MOULDING PACKAGE, Door Outside Belt (23-23-32)
	16	6001 496	Retainer
14A	1	2529 096-7	MOULDING, Quarter Window Glass Front (23-23-73)
15	1	2584 086-7	MOULDING PACKAGE, Quarter Outside Belt Rear (23-23-39)
	20	2094 380	Fastener
16	1	2584 082-3	MOULDING PACKAGE, Deck Opening Upper Panel (23-23-31)
	20	2094 380	Fastener
16A	1	2584 081	CAP PACKAGE, Deck Opening Upper Panel Moulding (23-23-41)
	1	2094 380	Fastener
17	1	2584 090	MOULDING PACKAGE, Deck Lid Outside Upper (23-23-30)
	8	6001 692	Retainer
	8	---- ---	Nut
18	1	2526 194	NAME PLATE, Deck Lid, "Sport Fury" (23-19-114)
	5	152 259	Nut
19	1	2526 199	PANEL, Deck Lid Finish (23-23-30)
	12	6001 692	Retainer
	6	---- ---	Nut
	6	9417 621	Nut
	2	6026 214	Screw
20	1	2584 091	MOULDING PACKAGE, Deck Lid Outside Lower (23-23-30)
	6	6001 692	Retainer
	4	6001 690	Retainer
	10	9417 621	Nut
21	1	2584 532-3	MOULDING PACKAGE, Quarter Panel Tail Lamp (23-23-39)
	8	6001 809	Retainer
	8	---- ---	Nut
22	1	2584 408	MOULDING PACKAGE, Quarter Panel Fuel Filler Door (23-23-39)
	2	6025 561	Screw
23	1	2584 352	MOULDING PACKAGE, Quarter Panel Right (23-23-39)
	6	6001 735	Retainer
	5	6024 679	Nut
	5	6001 726	Retainer
	1	2584 353	MOULDING PACKAGE, Quarter Panel Left (23-23-39)
	6	6001 735	Retainer
	5	6024 679	Nut
	5	6001 726	Retainer
24	1	2584 220-1	MOULDING PACKAGE, Quarter Panel Belt (23-23-39)
	6	6001 496	Retainer
	2	---- ---	Screw
25	1	2584 330-1	MOULDING PACKAGE, Door Outside (23-23-32)
	10	6001 735	Retainer
	2	6001 734	Retainer
	2	9417 621	Nut

All Packages Include Attaching Parts

Part Type Code is Indicated in Parentheses

EXTERIOR VIEW - PLYMOUTH P2-P CONVERTIBLE COUPE

MyMopar.com

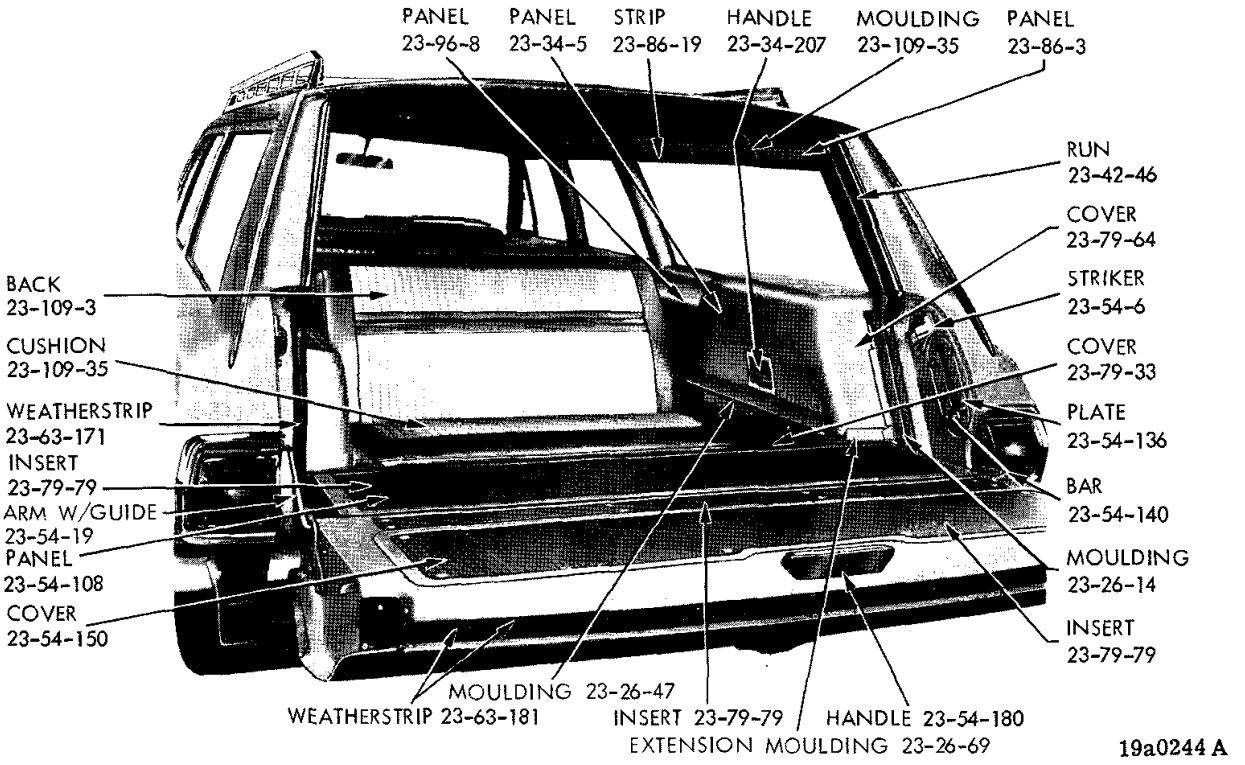

REAR INTERIOR VIEW - PLYMOUTH STATION WAGON

NOTES

MyMopar.com

NOTES

MyMopar.com

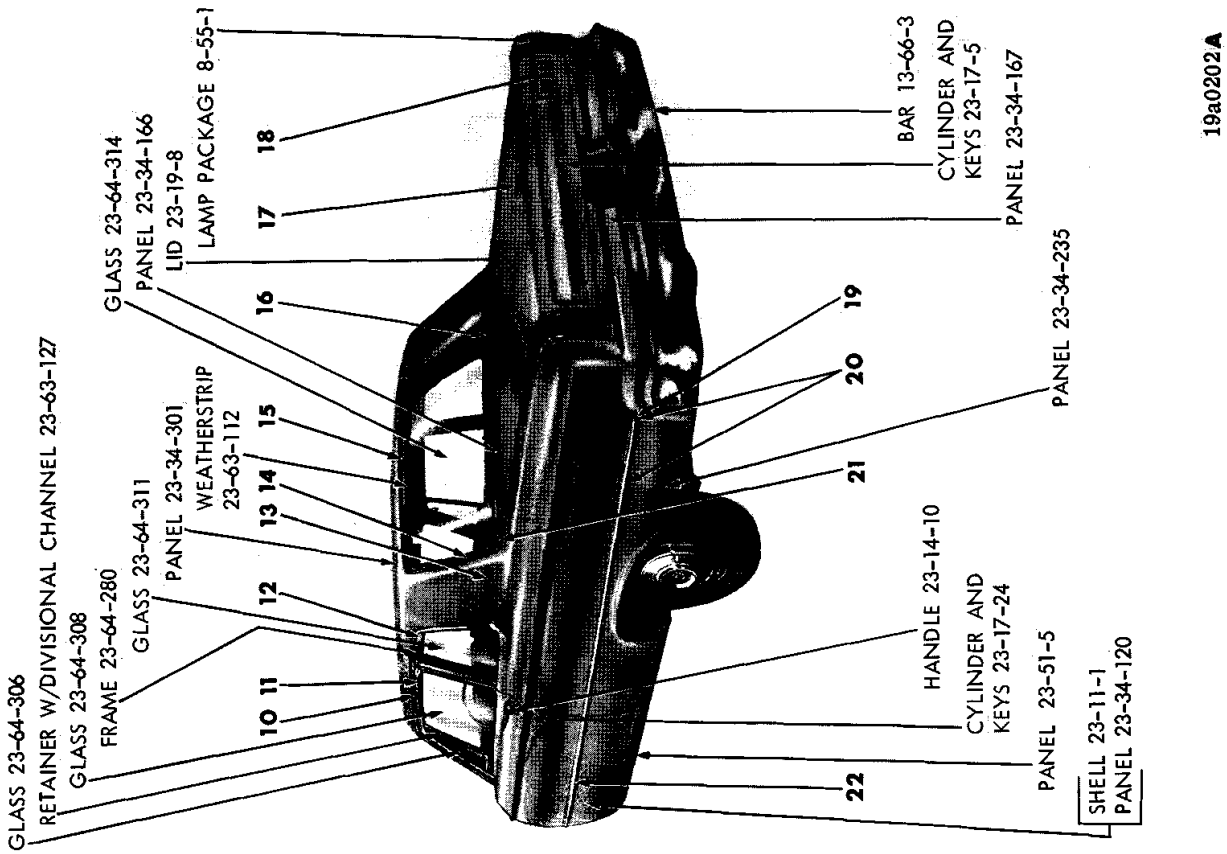

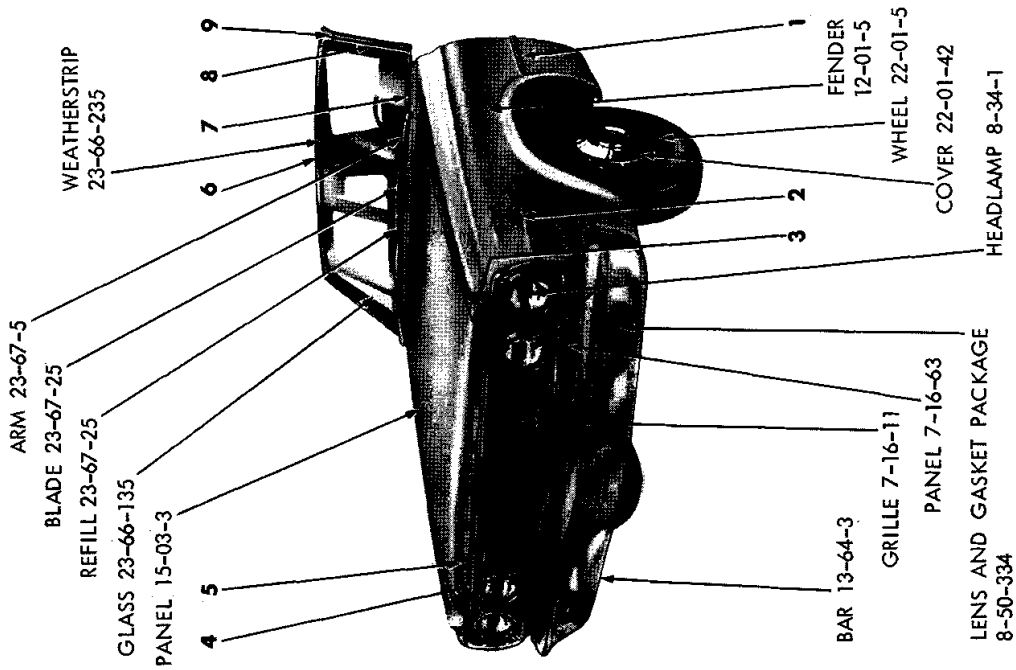

EXTERIOR VIEW - CORONET W-L 2 DOOR SEDAN

MyMopar.com

REF. NO.	QTY	PART NUMBER	DESCRIPTION
1	1	2584 064-5	MOULDING PACKAGE, Fender Side (12-15-2)
	2	6006 412	Clip
	2	6001 661	Bolt
	2	---- ---	Nut
2	2	2449 934	NAME PLATE, Fender Side, Coronet (12-15-21)
	8	---- ---	Seal
	8	6023 260	Nut
3	2	2449 932	MEDALLION, Fender Front (12-15-21)
	4	6000 616	Nut
4	1	2584 063	MOULDING PACKAGE, Hood Front (15-25-2)
	5	---- ---	Nut
	3	---- ---	Palnut
	3	6001 682	Retainer
5	2	2417 825	LETTER "D", Hood Front Name (15-06-16)
	1	2417 826	"O"
	1	2417 828	"G"
	1	2417 829	"E"
6	1	2218 594	MOULDING, Windshield Outside Upper (23-23-65)
	8	6001 537	Retainer and Screw
7	1	2218 595	MOULDING, Windshield Outside Finish Lower (23-23-65)
	10	6001 537	Retainer and Screw
8	1	2218 596-7	MOULDING, Windshield Outside Finish Side (23-23-65)
	6	6023 247	Screw
9	1	2491 014-5	MOULDING, Windshield Outside Side Upper Extension (23-23-65)
10	1	2483 436-7	MOULDING, Roof Drain Trough Side (23-59-61)
11	1	2491 716-7	MOULDING, Door Frame Finish Upper (Spec. Equip.)(23-23-32)
12	1	2422 438-9	MOULDING, Quarter Window Opening Frame Upper (Spec. Equip.) (23-23-73)
13	1	2448 150-1	MOULDING PACKAGE, Quarter Panel Paint Break (Spec. Equip.) (23-23-39)
	6	6001 030	Retainer and Stud
	6	152 259	Nut
14	1	2480 918-9	MOULDING, Rear Window Outside Side (23-23-52)
	4	6023 693	Screw
15	1	2495 269	MOULDING PACKAGE, Rear Window Outside Upper (23-23-52)
	6	6001 525	Retainer and Screw
16	1	2480 922	MOULDING, Rear Window Outside Lower (23-23-52)
	6	6023 693	Screw
17	1	2527 802	MEDALLION, Deck Lid Outside (23-19-114)
	2	---- ---	Seal
18	2	2528 315	LETTER "D", Deck Lid Name (23-19-114)
	1	2528 316	"O"
	1	2528 317	"G"
	1	2528 318	"E"
	9	152 259	Nut
19	1	2526 872-3	CAP, Quarter Panel Moulding Rear (23-23-41)
20	1	2584 142-3	MOULDING PACKAGE, Quarter Panel (23-23-39)
	2	6024 271	Screw
	12	6001 623	Clip
	8	6001 662	Retainer
	8	6024 679	Nut
21	1	2484 380-1	MOULDING, Rear Window Outside Lower Corner (23-23-52)
	2	6023 693	Screw
22	1	2584 138-9	MOULDING PACKAGE, Door Outside (23-23-32)
	2	6001 662	Retainer
	4	9417 621	Nut
	12	6001 623	Clip

All Packages Include Attaching Parts

Part Type Code is Indicated in Parentheses

EXTERIOR VIEW CORONET W-L 2 DOOR SEDAN

MyMopar.com

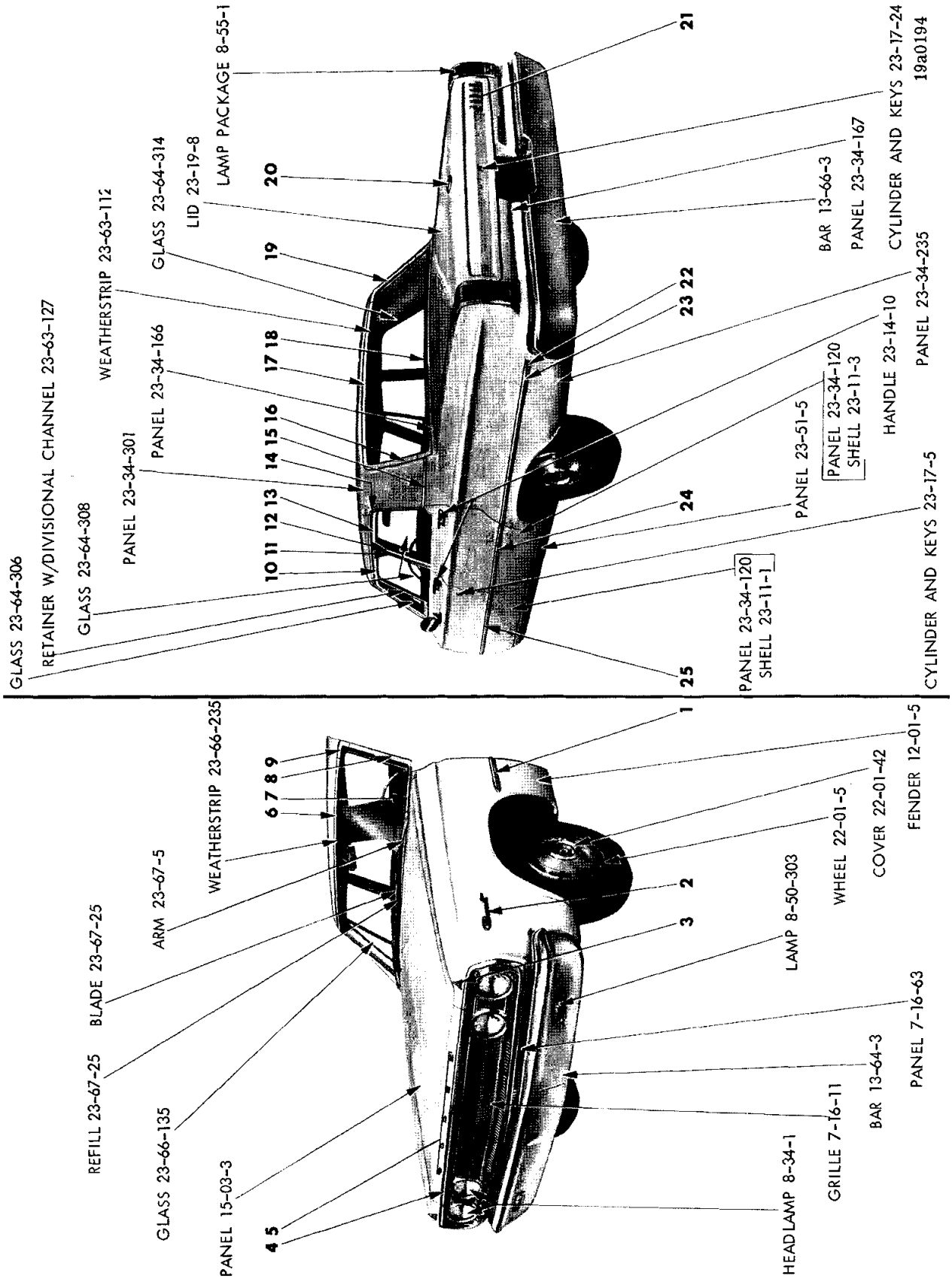

EXTERIOR VIEW - CORONET W-L 4 DOOR SEDAN

MyMopar.com

REF. NO.	QTY	PART NUMBER	DESCRIPTION
1	1	2584 064-5	MOULDING PACKAGE, Fender Side (12-15-2)
	2	6001 623	Clip
	2	6001 661	Bolt
	2	---- ---	Nut
2	2	2449 934	NAME PLATE, Fender Side, Coronet (12-15-21)
	8	---- ---	Seal
	8	6023 260	Nut
3	2	2449 932	MEDALLION, Fender Front (12-15-21)
	4	6000 616	Nut
4	1	2584 063	MOULDING PACKAGE, Hood Front (15-25-2)
	5	---- ---	Nut
	3	---- ---	Palnut
	3	6001 682	Retainer
5	2	2417 825	LETTER, Hood Front Name, "D" (15-06-16)
	1	2417 826	"O"
	1	2417 828	"G"
	1	2417 829	"E"
6	1	2218 594	MOULDING, Windshield Outside Upper (23-23-65)
	8	6001 537	Retainer and Screw
7	1	2218 595	MOULDING, Windshield Outside Finish Lower (23-23-65)
	10	6001 537	Retainer and Screw
8	1	2218 596-7	MOULDING, Windshield Outside Finish Side (23-23-65)
	6	6023 247	Screw
9	1	2491 014-5	MOULDING, Windshield Outside Side Upper Extension (23-23-65)
10	1	2218 444-5	MOULDING, Front Door Frame Finish Upper (23-23-32)
11	1	2167 998-9	MOULDING, Front Door Frame Outside Finish Rear (23-23-32)
12	1	2167 998-9	MOULDING, Rear Door Frame Outside Finish Front (23-23-33)
13	1	2216 036-7	MOULDING, Rear Door Frame Finish Upper (23-23-33)
14	1	2483 436-7	MOULDING, Roof Drain Trough Side (23-59-61)
15	1	2448 150-1	MOULDING PACKAGE, Quarter Outside Belt Paint Break (Spec. Equip.) (23-23-39)
	6	6001 030	Retainer and Stud
	6	152 259	Nut
16	1	2484 380-1	MOULDING, Rear Window Outside Lower Corner (23-23-52)
	2	6023 693	Screw
17	1	2495 269	MOULDING PACKAGE, Rear Window Outside Upper (23-23-52)
	6	6001 525	Retainer and Screw
18	1	2480 922	MOULDING, Rear Window Outside Lower (23-23-52)
	6	6023 693	Screw
19	1	2480 918-9	MOULDING, Rear Window Outside Side (23-23-52)
	4	6023 693	Screw
20	1	2527 802	MEDALLION, Deck Lid Outside (23-19-114)
	2	---- ---	Seal
	2	6013 114	Nut
21	2	2528 315	LETTER "D", Deck Lid Name (23-19-114)
	1	2528 316	"O"
	1	2528 317	"G"
	1	2528 318	"E"
	9	152 259	Nut
22	1	2526 872-3	CAP, Quarter Panel Moulding Rear (23-23-41)
23	1	2584 144-5	MOULDING PACKAGE, Quarter Panel (23-23-39)
	2	6024 271	Screw
	6	6001 623	Clip
	8	6001 662	Retainer
	8	6024 679	Nut
24	1	2584 166-7	MOULDING PACKAGE, Rear Door Outside (23-23-33)
	2	6001 662	Retainer
	6	9417 621	Nut
	6	6001 623	Clip
	2	6001 624	Retainer
25	1	2584 140-1	MOULDING PACKAGE, Front Door Outside (23-23-32)
	2	6001 662	Retainer
	6	9417 621	Nut
	10	6001 623	Clip
	2	6001 624	Retainer

All Packages Include Attaching Parts

Part Type Code is Indicated in Parentheses

EXTERIOR VIEW - CORONET W-L 4 DOOR SEDAN

MyMopar.com

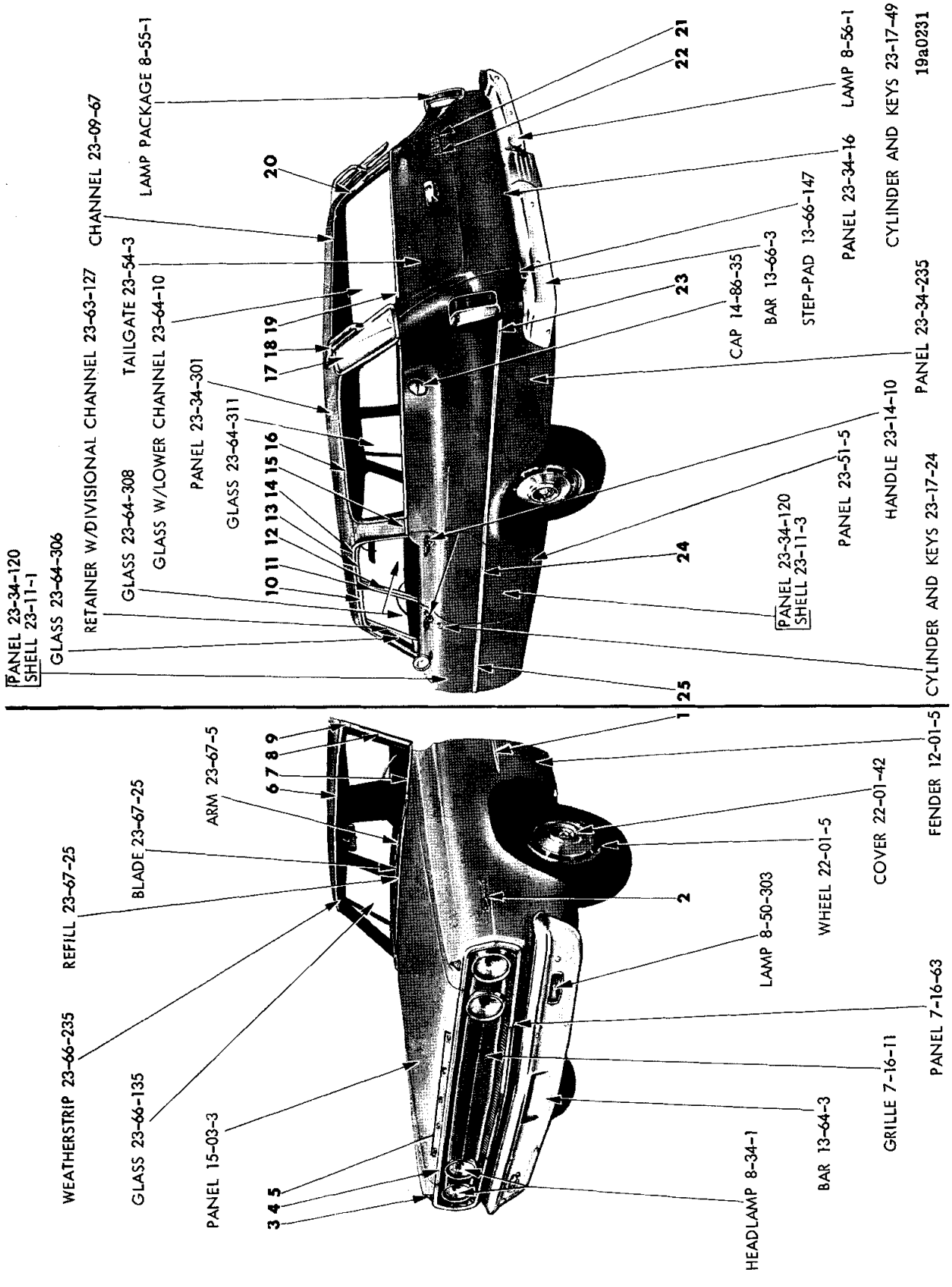

EXTERIOR VIEW - CORONET W-L STATION WAGON

MyMopar.com

REF. NO.	QTY	PART NUMBER	DESCRIPTION
1	1	2584 064-5	MOULDING PACKAGE, Fender Side (12-15-2)
	2	6001 623	Clip
	2	6001 661	Bolt
	2	---- ---	Nut
2	2	2449 934	NAME PLATE, Fender Side, Coronet (12-15-21)
	8	---- ---	Washer
	8	6023 260	Nut
3	2	2449 932	MEDALLION, Fender Front (12-15-21)
	4	6000 616	Nut
4	1	2584 063	MOULDING PACKAGE, Hood (15-25-2)
	5	---- ---	Nut
	3	---- ---	Palnut
	3	6001 682	Retainer
5	2	2417 825	LETTER, Hood Front Name, "D" (15-06-16)
	1	2417 826	"O"
	1	2417 828	"G"
	1	2417 829	"E"
6	1	2218 594	MOULDING, Windshield Outside Upper (23-23-65)
	8	6001 537	Retainer
7	1	2218 595	MOULDING, Windshield Outside Finish Lower (23-23-65)
	10	6001 537	Retainer
8	1	2218 596-7	MOULDING, Windshield Outside Finish Side (23-23-65)
	6	6023 247	Screw
9	1	2491 014-5	MOULDING, Windshield Outside Side Upper Extension (23-23-65)
10	1	2218 444-5	MOULDING, Front Door Frame Finish Upper (Spec. Equip.) (23-23-32)
11	1	2167 998-9	MOULDING, Front Door Frame Finish Rear (Spec. Equip.) (23-23-32)
12	1	2167 998-9	MOULDING, Rear Door Frame Finish Front (Spec. Equip.) (23-23-33)
13	1	2216 036-7	MOULDING, Rear Door Frame Finish Upper (Spec. Equip.) (23-23-33)
14	1	2483 436-7	MOULDING, Roof Side Drain Trough (23-59-61)
15	1	2299 374	MOULDING PACKAGE, Quarter Outside Belt Paint Break Right (Spec. Equip.)(23-23-39)
	1	2299 399	Left (Spec. Equip.) (23-23-39)
	4	6001 071	Clip
16	2	2422 471	LOCKINGSTRIP, Quarter Window Glass Weatherstrip (23-63-110)
17	1	2252 254-5	DEFLECTOR, Roof Panel Outside Air (23-36-134)
	2	167 079	Screw
	4	9418 381	Screw
18	1	2482 768-9	HANDLE, Roof Panel Outside Assist (23-36-123)
19	1	2448 488	MOULDING PACKAGE, Tailgate Outside Panel Belt (23-23-61)
	5	6001 435	Clip
20	1	2480 976-7	MOULDING, Rear Upper Pillar Outside (23-23-60)
	8	9417 732	Screw
21	2	2528 319	LETTER "D", Tailgate Name (23-54-11)
	1	2528 320	"O"
	1	2528 321	"G"
	1	2528 322	"E"
	10	152 259	Nut
22	1	2449 932	MEDALLION, Tailgate Outside (23-54-11)
	2	152 259	Nut
23	1	2584 168-9	MOULDING PACKAGE, Quarter Panel (23-23-39)
	2	116 000	Nut
	2	6001 662	Retainer
	14	6001 623	Retainer
	2	6024 271	Screw
	★	---- ---	Sealer
24	1	2584 520-1	MOULDING PACKAGE, Rear Door Outside (23-23-33)
	4	9417 621	Nut
	2	6001 662	Retainer
	6	6001 623	Retainer
	2	6001 624	Retainer
25	1	2584 140-1	MOULDING PACKAGE, Front Door Outside (23-23-32)
	2	6001 662	Retainer
	6	9417 621	Nut
	10	6001 623	Clip
	2	6001 624	Retainer

All Packages Include Attaching Parts

Part Type Code is Indicated in Parentheses

EXTERIOR VIEW - CORONET W-L STATION WAGON

MyMopar.com

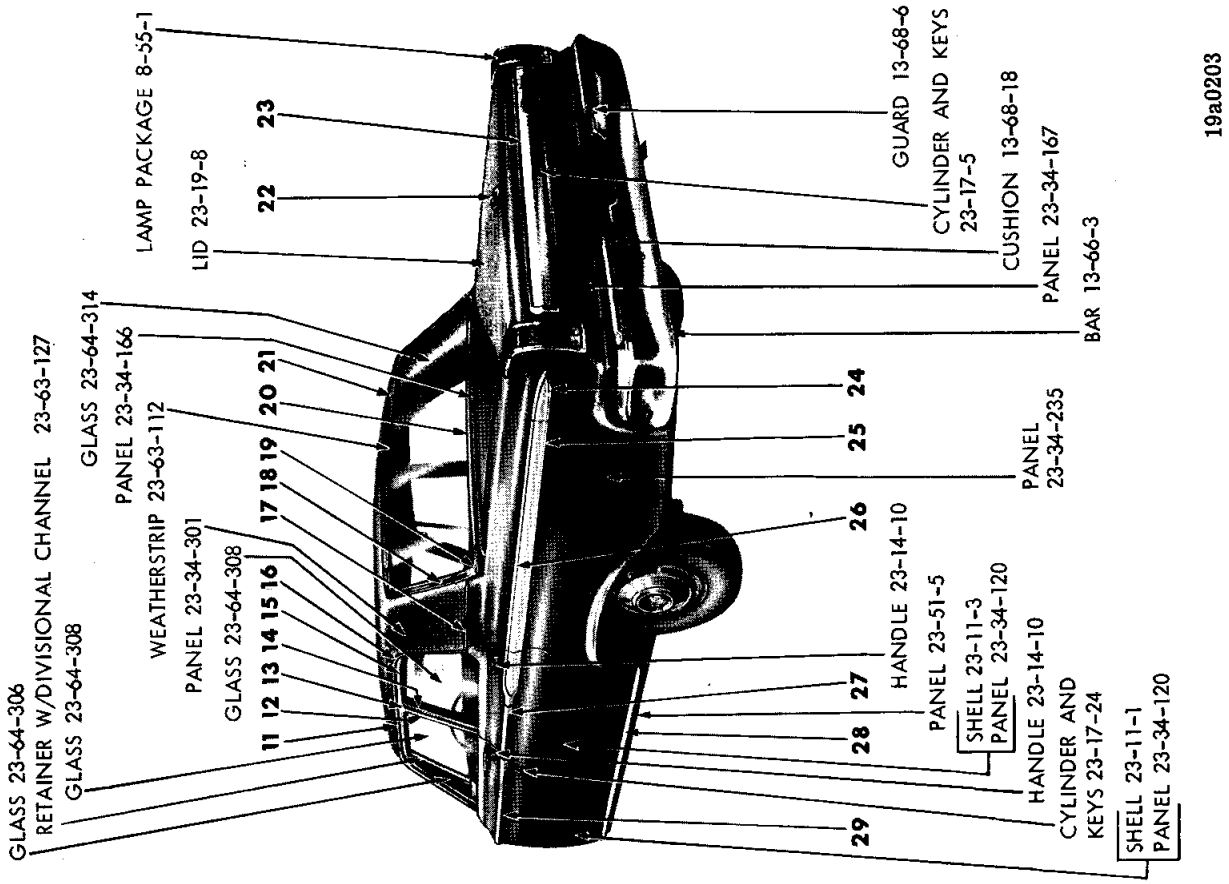

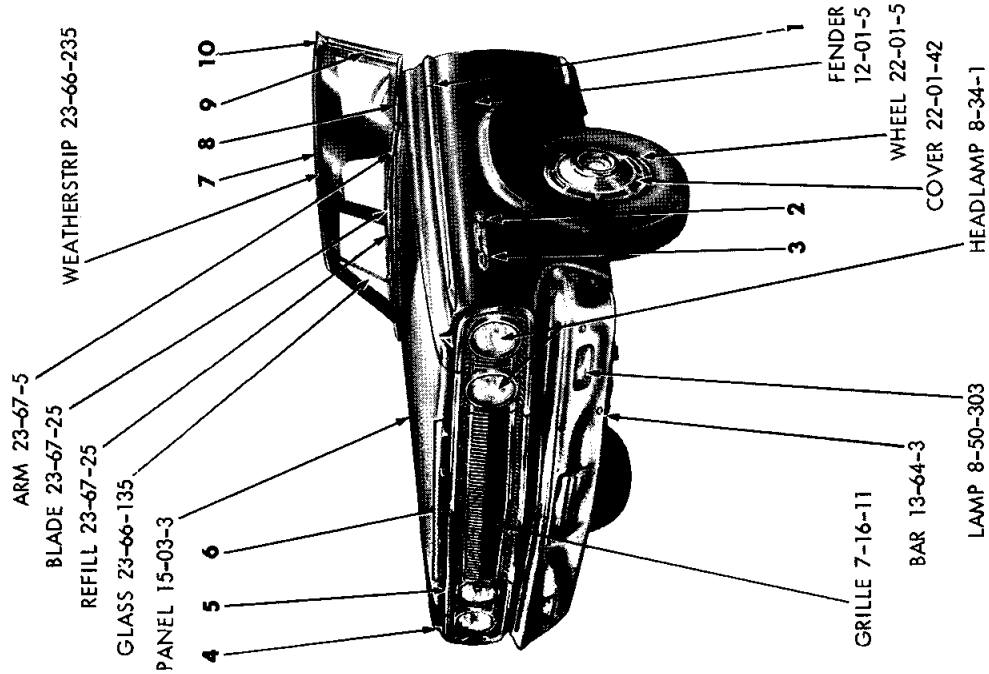

EXTERIOR VIEW - CORONET W-H 4 DOOR SEDAN

MyMopar.com

REF. NO.	QTY	PART NUMBER	DESCRIPTION
1	1	2584 066-7	MOULDING PACKAGE, Fender Side (12-15-2)
	8	---- ---	Retainer - Right
	8	---- ---	Retainer - Left
	16	---- ---	Nut
2	2	2449 935	NUMERAL, Fender Side, 440 (12-15-21)
	4	6023 260	Nut
3	2	2449 934	NAME PLATE, Fender Side, Coronet (12-15-21)
	8	---- ---	Washer
	8	6023 260	Nut
4	2	2449 932	MEDALLION, Fender Front (12-15-21)
	4	6000 616	Nut
5	1	2584 063	MOULDING, Hood Front (15-25-2)
	5	---- ---	Nut
	3	---- ---	Palnut
	3	6001 682	Retainer
6	2	2417 825	LETTER, Hood Front Name, "D" (15-06-16)
	1	2417 826	"O"
	1	2417 828	"G"
	1	2417 829	"E"
	10	6000 616	Nut
7	1	2218 594	MOULDING, Windshield Outside Upper (23-23-65)
	8	6001 537	Retainer and Screw
8	1	2218 595	MOULDING, Windshield Outside Finish Lower (23-23-65)
	10	6001 537	Retainer and Screw
9	1	2218 596-7	MOULDING, Windshield Outside Finish Side (23-23-65)
	6	6023 247	Screw
10	1	2491 016-7	MOULDING, Windshield Outside Side Upper Extension (23-23-65)
11	1	2218 444-5	MOULDING, Front Door Frame Finish Upper (23-23-32)
12	1	2167 998-9	MOULDING, Front Door Frame Outside Finish Rear (23-23-32)
13	1	2216 356-7	PANEL, Body Center Pillar Outside Finish Upper (23-23-16)
14	1	2167 998-9	MOULDING, Rear Door Frame Outside Finish Front (23-23-33)
15	1	2216 036-7	MOULDING, Rear Door Frame Outside Finish Upper (23-23-33)
16	1	2483 436-7	MOULDING, Roof Drain Trough Side (23-59-61)
17	1	2495 360-1	MOULDING PACKAGE, Quarter Panel Paint Break (Spec. Equip.) (23-23-39)
	6	6001 030	Retainer and Stud
	6	152 259	Nut
18	1	2480 918-9	MOULDING, Rear Window Outside Side (23-23-52)
	4	6023 693	Screw
19	1	2484 380-1	MOULDING, Rear Window Outside Lower Corner (23-23-52)
	2	6023 693	Screw
20	1	2480 922	MOULDING, Rear Window Outside Lower (23-23-52)
	6	6023 693	Screw
21	1	2495 269	MOULDING PACKAGE, Rear Window Outside Upper (23-23-52)
	6	6001 525	Retainer and Screw
22	1	2527 802	MEDALLION, Deck Lid Outside (23-19-114)
	2	---- ---	Seal
	2	6013 114	Nut
23	1	2573 204	PANEL and NAME PLATE, Deck Lid Outside Finish (23-23-30)
	6	---- ---	Screw
	6	6024 705	Seal
	6	152 259	Nut
24	1	2584 160-1	MOULDING PACKAGE, Quarter Panel End (23-23-39)
	2	2529 101	Retainer and Seal
	2	6024 679	Nut
25	1	2584 156-7	MOULDING PACKAGE, Quarter Panel Lower (23-23-39)
	4	6001 627	Clip
	8	---- ---	Clip
	8	6024 679	Nut
26	1	2584 150-1	MOULDING PACKAGE, Quarter Panel Upper (23-23-39)
	4	6001 627	Clip
	8	---- ---	Clip
	8	6024 679	Nut
27	1	2584 162-3	MOULDING PACKAGE, Rear Door Outside (23-23-33)
	2	2529 108-9	Clip
	8	9417 621	Nut
	4	6001 634	Clip
	★	6000 960	Clip
	4	6001 848	Retainer
28	2	2421 912	MOULDING PACKAGE, Body Side Sill Outside Panel (23-23-2)
	4	6023 681	Screw
	14	6001 083	Retainer
29	1	2584 136-7	MOULDING PACKAGE, Front Door Outside (23-23-32)
	2	2529 108-9	Clip
	4	9417 621	Nut
	6	6001 634	Clip

All Packages Include Attaching Parts

Part Type Code is Indicated in Parentheses

EXTERIOR VIEW - CORONET W-H 4 DOOR SEDAN

MyMopar.com

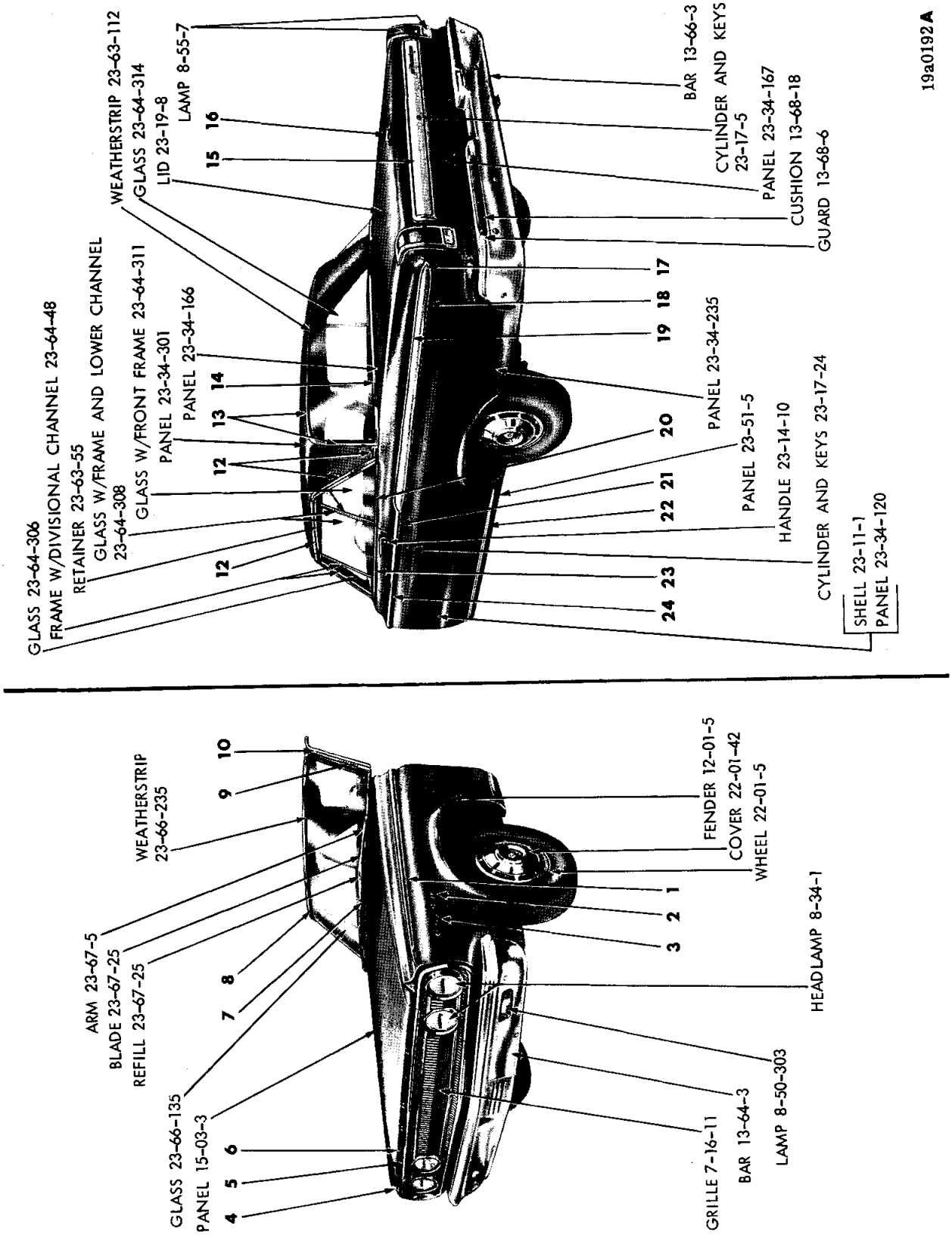

EXTERIOR VIEW - CORONET W-H 2 DOOR HARDTOP

MyMopar.com

REF. NO.	QTY	PART NUMBER	DESCRIPTION
1	1	2584 066-7	MOULDING PACKAGE, Fender Side (12-15-2)
	8	---- ---	Retainer - Right
	8	---- ---	Retainer - Left
	16	---- ---	Nut
2	2	2449 935	NUMERAL, Fender Side, 440 (12-15-21)
	4	6023 260	Nut
3	2	2449 934	NAME PLATE, Fender Side, Coronet (12-15-21)
	8	---- ---	Seal
	8	6023 260	Nut
4	2	2449 932	MEDALLION, Front Fender (12-15-21)
	4	6000 616	Nut
5	1	2584 063	MOULDING, Hood Front (15-25-2)
	5	---- ---	Nut
	3	---- ---	Palnut
	3	6001 682	Retainer
6	2	2417 825	LETTER, Hood Front Name, "D" (15-06-16)
	1	2417 826	"O"
	1	2417 828	"G"
	1	2417 829	"E"
7	1	2218 595	MOULDING, Windshield Outside Finish Lower (23-23-65)
	10	6001 537	Retainer and Screw
8	1	2218 594	MOULDING, Windshield Outside Upper (23-23-65)
	8	6001 537	Retainer and Screw
9	1	2218 596-7	MOULDING, Windshield Outside Finish Side (23-23-65)
	6	6023 247	Screw
10	1	2492 712-3	MOULDING, Windshield Outside Side Upper Extension (23-23-65)
	6	6024 271	Screw
12	1	2525 556-7	MOULDING PACKAGE, Roof Side Drain Trough Front and Rear (23-59-61)
	6	2573 062	Clip
	6	6024 271	Screw
	2	6024 718	Washer
	2	446 059	Nut
13	1	2495 276-7	MOULDING PACKAGE, Rear Window Outside Upper and Side (23-23-52)
	14	6001 084	Retainer and Screw
14	1	2495 274-5	MOULDING PACKAGE, Rear Window Outside Lower (23-23-52)
	12	6001 084	Retainer and Screw
15	1	2573 204	PANEL and NAME PLATE, Deck Lid Outside Finish
	6	---- ---	Nut
	6	6024 711	Seal
	6	---- ---	Retainer and Stud
16	1	2527 802	MEDALLION, Deck Lid Outside (23-19-114)
	2	6013 114	Nut
	2	---- ---	Seal
17	1	2584 160-1	MOULDING and TIE PLATE PACKAGE, Quarter Outside Upper and Lower End (23-23-39)
	2	2529 101	Retainer and Seal
	2	6024 679	Nut
18	2	2584 146	MOULDING PACKAGE, Quarter Panel Rear Lower (23-23-39)
	8	6024 679	Nut
	8	6001 627	Clip
	8	6001 865	Clip
19	2	2584 146	MOULDING PACKAGE, Quarter Panel Rear Upper (23-23-39)
	8	6024 679	Nut
	8	6001 627	Clip
	8	6001 865	Clip
20	1	2495 320-1	MOULDING PACKAGE, Quarter Panel Belt Upper (23-23-39)
	4	6001 716	Clip and Seal
	4	6001 717	Clip and Seal
	4	6001 718	Clip and Seal
21	1	2584 164-5	MOULDING PACKAGE, Quarter Outside Front (23-23-39)
	2	6000 960	Clip
	2	6001 627	Retainer
	2	6024 271	Screw
22	2	2421 912	MOULDING PACKAGE, Body Side Sill Outside Panel (23-23-2)
	4	6023 681	Screw
	14	6001 083	Retainer
23	1	2495 318-9	MOULDING PACKAGE, Front Door Outside Belt Upper (23-23-32)
	6	6001 716	Clip and Seal
	4	6001 717	Clip and Seal
	4	6001 718	Clip and Seal
24	1	2584 134-5	MOULDING PACKAGE, Front Door Outside (23-23-32)
	2	2529 108-9	Clip
	8	9417 621	Nut
	4	6001 634	Clip

All Packages Include Attaching Parts

Part Type Code is Indicated in Parentheses

EXTERIOR VIEW - CORONET W-H 2 DOOR HARDTOP

MyMopar.com

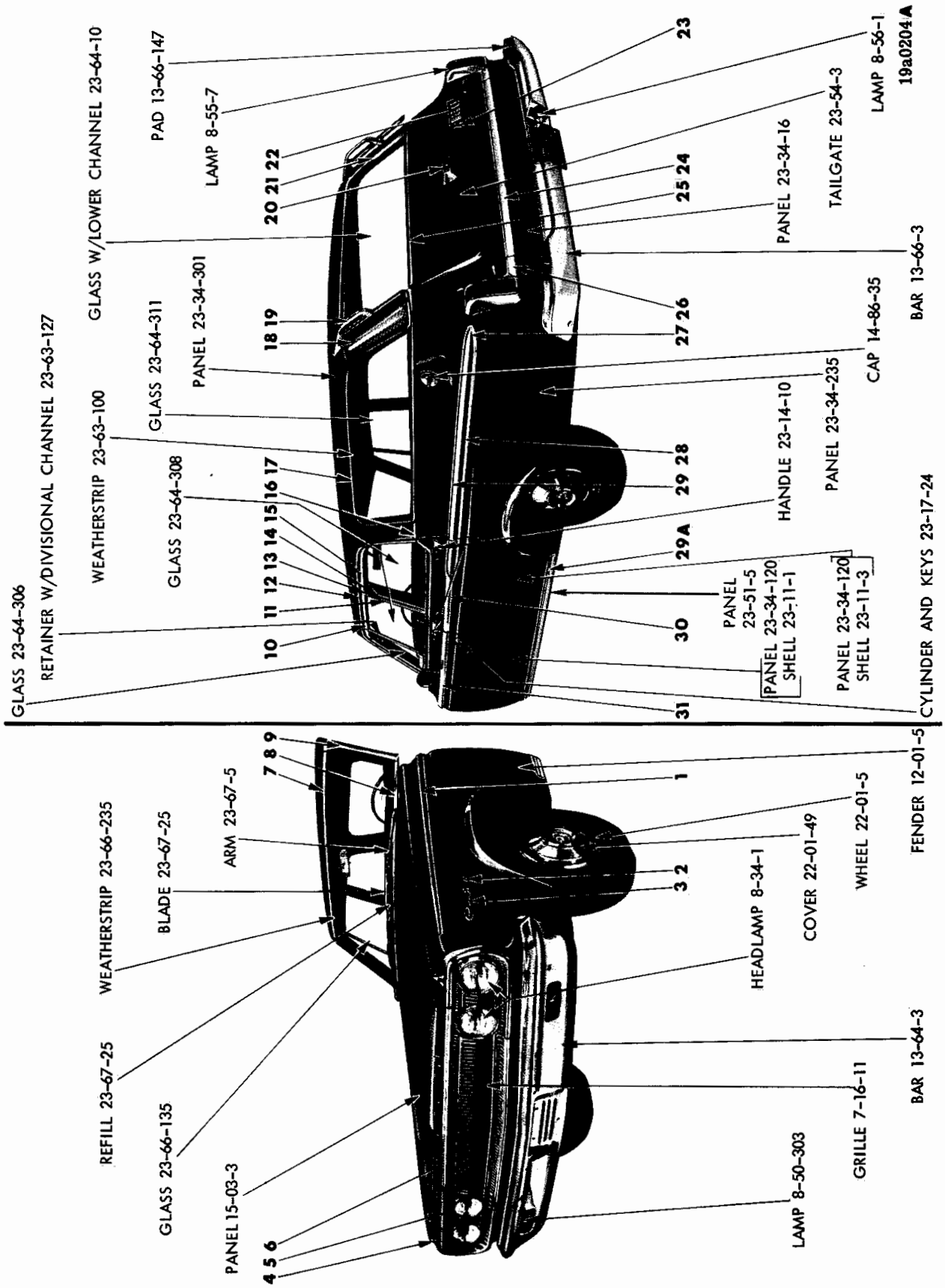

EXTERIOR VIEW - CORONET W-H STATION WAGON

MyMopar.com

REF. NO.	QTY	PART NUMBER	DESCRIPTION
1	1	2584 066-7	MOULDING PACKAGE, Fender Side (12-15-2)
	8	---- ---	Retainer - Right
	8	---- ---	Retainer - Left
	16	---- ---	Nut
2	2	2449 935	NUMERAL, Fender Side, 440 (12-15-21)
	4	6023 260	Nut
3	2	2449 934	NAME PLATE, Fender Side, Coronet (12-15-21)
	8	---- ---	Washer
	8	6023 260	Nut
4	2	2449 932	MEDALLION, Fender Front (12-15-21)
	4	6000 616	Nut
5	1	2584 063	MOULDING PACKAGE, Hood Front (15-25-2)
	5	---- ---	Nut
	3	---- ---	Palnut
	3	6001 682	Retainer
6	2	2417 825	LETTER, Hood Front Name, "D" (15-06-16)
	1	2417 826	"O"
	1	2417 828	"G"
	1	2417 829	"E"
	10	6000 616	Nut
7	1	2218 594	MOULDING, Windshield Outside Upper (23-23-65)
	8	6001 537	Retainer and Screw
8	1	2218 595	MOULDING, Windshield Outside Finish Lower (23-23-65)
	10	6001 537	Retainer and Screw
9	1	2218 596-7	MOULDING, Windshield Outside Finish Side (23-23-65)
	6	6023 247	Screw
10	1	2218 444-5	MOULDING, Front Door Outside Window Opening Frame Upper (23-23-32)
11	1	2167 998-9	MOULDING, Front Door Frame Outside Finish Rear (23-23-32)
12	1	2483 436-7	MOULDING, Roof Drain Trough Side (23-59-61)
13	1	2216 356-7	PANEL, Body Center Pillar Outside Finish Upper (23-23-16)
	4	6022 890	Screw
14	1	2167 998-9	MOULDING, Rear Door Frame Outside Finish Front (23-23-33)
15	1	2216 036-7	MOULDING, Rear Door Frame Outside Finish Upper (23-23-33)
16	1	2299 374	MOULDING PACKAGE, Quarter Panel Belt Paint Break Right (Spec. Equip.)(23-23-39)
	2	6001 071	Clip
	1	2299 399	MOULDING PACKAGE, Quarter Panel Belt Paint Break Left (Spec. Equip.)(23-23-39)
	2	6001 071	Clip
17	2	2422 471	LOCKINGSTRIP, Quarter Window Glass Weatherstrip (23-63-110)
18	1	2252 254-5	DEFLECTOR, Roof Panel Outside Air (23-36-134)
	2	167 079	Screw
	4	9418 381	Screw
19	1	2482 768-9	HANDLE, Roof Panel Outside Assist (23-36-123)
20	1	2428 221	BASE w/Stud, Tailgate Electric Window Regulator Outside Panel (23-50-418)
21	1	2480 976-7	MOULDING, Rear Upper Pillar Outside (23-23-60)
	8	9417 732	Screw
22	2	2528 319	LETTER "D", Tailgate Name (23-54-11)
	1	2528 320	"O"
	1	2528 321	"G"
	1	2528 322	"E"
	10	152 259	Nut
23	1	2449 932	MEDALLION, Tailgate Outside (23-54-11)
	2	152 259	Nut
24	1	2584 094	MOULDING PACKAGE, Tailgate (23-23-61)
	6	6001 688	Retainer
25	1	2448 488	MOULDING PACKAGE, Tailgate Outside Panel Belt (23-23-61)
	5	6001 435	Clip
	2	6024 564	Screw
26	1	2527 018-9	MOULDING, Quarter Panel Extension (23-23-39)
	4	6000 960	Fastener
27	1	2585 984-5	MOULDING PACKAGE, Quarter Panel End (23-23-39)
	2	2529 104-5	Retainer and Seal
	2	116 000	Nut
28	1	2584 156-7	MOULDING PACKAGE, Quarter Panel Lower (23-23-39)
	12	6001 627	Clip
29	1	2584 150-1	MOULDING PACKAGE, Quarter Panel Upper (23-23-39)
	12	6001 627	Clip
29A	2	2421 912	MOULDING PACKAGE, Body Side Sill Outside Panel (23-23-2)
	14	6001 083	Retainer
	4	6023 681	Screw
30	1	2584 162-3	MOULDING PACKAGE, Rear Door Outside (23-23-33)
	2	2529 108-9	Clip
	4	6001 634	Clip
	★	6000 960	Clip
	4	6001 848	Retainer
	4	9417 621	Nut
31	1	2584 136-7	MOULDING PACKAGE, Door Outside (23-23-32)
	2	2529 108-9	Clip
	4	9417 621	Nut
	6	6001 634	Clip

All Packages Include Attaching Parts

Part Type Code is Indicated in Parentheses

EXTERIOR VIEW - CORONET W-H STATION WAGON

MyMopar.com

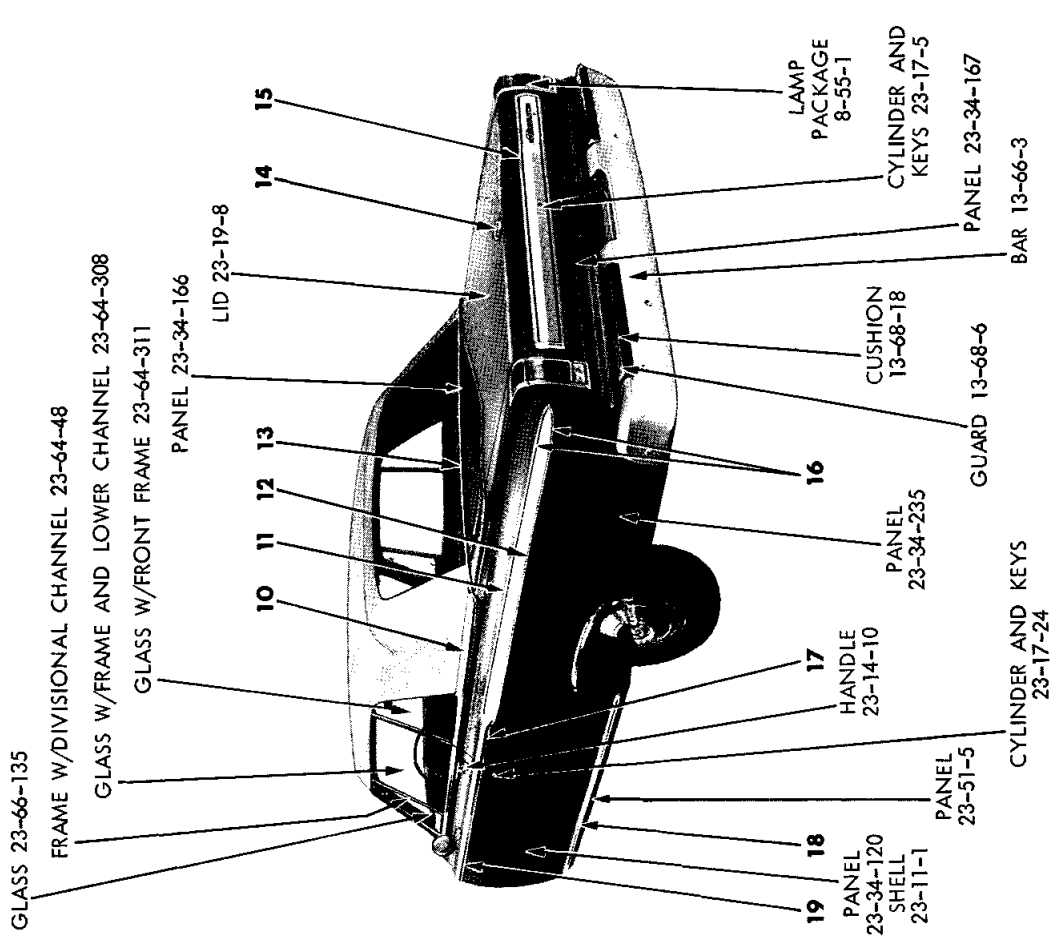

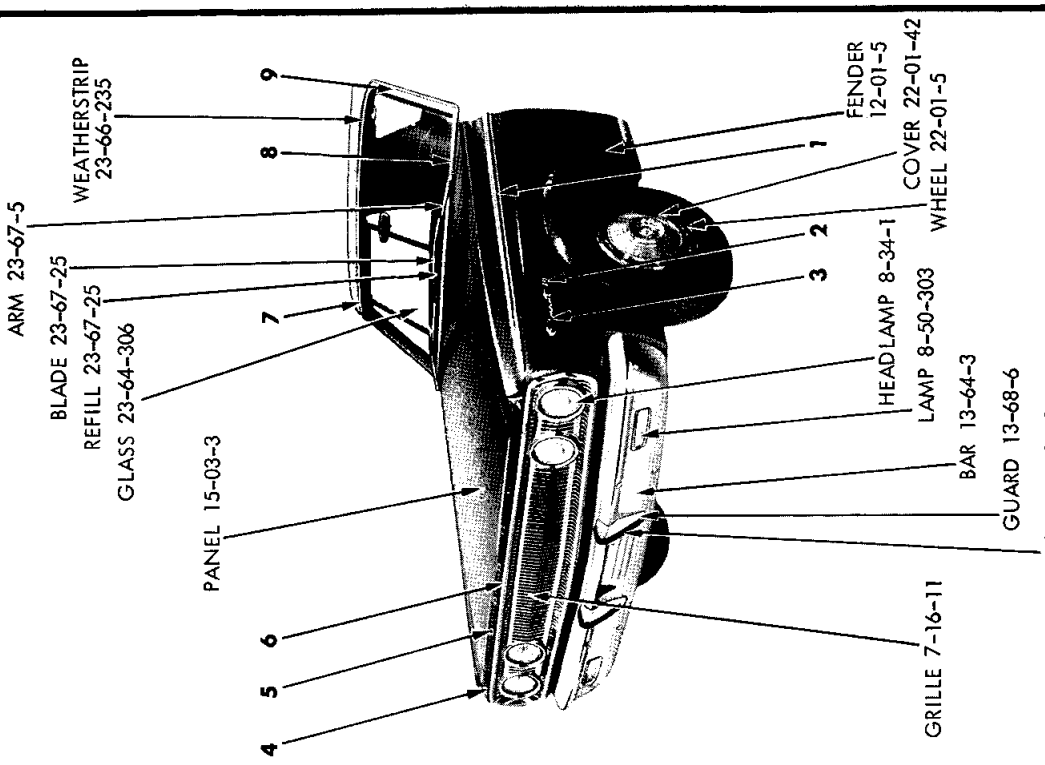

EXTERIOR VIEW - CORONET W-H CONVERTIBLE COUPE

MyMopar.com

REF. NO.	QTY	PART NUMBER	DESCRIPTION
1	1	2584 066-7	MOULDING PACKAGE, Fender Side (12-15-2)
	8	---- ---	Retainer - Right
	8	---- ---	Retainer - Left
	16	---- ---	Nut
2	2	2449 935	NUMERAL, Fender Side, 440 (12-15-21)
	4	6023 260	Nut
3	2	2449 934	NAME PLATE, Fender Side, Coronet (12-15-21)
	8	---- ---	Washer
	8	6023 260	Nut
4	2	2449 932	MEDALLION, Fender Front (12-15-21)
	4	6000 616	Nut
5	2	2417 825	LETTER, Hood Front Name, "D" (15-06-16)
	1	2417 826	"O"
	1	2417 828	"G"
	1	2417 829	"E"
6	1	2584 063	MOULDING, Hood Front (15-25-2)
	5	---- ---	Nut
	3	---- ---	Palnut
	3	6001 682	Retainer
7	1	2482 898-9	MOULDING, Windshield Header Outside (23-23-65)
	7	162 402	Screw
	★	---- ---	Seal
8	1	2218 595	MOULDING, Windshield Outside Finish Lower (23-23-65)
	10	6001 537	Retainer
9	1	2218 596-7	MOULDING, Windshield Outside Finish Side (23-23-65)
	6	6023 247	Screw
10	1	2483 848-9	MOULDING, Quarter Panel Belt Rear (23-23-39)
	10	6024 477	Fastener
11	2	2584 146	MOULDING PACKAGE, Quarter Panel Rear Upper (23-23-39)
	8	6001 865	Clip
	8	6024 679	Nut
	8	6001 627	Clip
12	2	2584 146	MOULDING PACKAGE, Quarter Outside Rear Lower (23-23-39)
	8	6001 865	Clip
	8	6024 679	Nut
	8	6001 627	Clip
13	1	2448 458-9	MOULDING PACKAGE, Deck Opening Upper Panel (23-23-31)
	10	6024 477	Fastener
14	1	2527 802	MEDALLION, Deck Lid Outside (23-19-114)
	2	---- ---	Seal
	2	6013 114	Nut
15	1	2573 204	PANEL and NAME PLATE, Deck Lid Outside Finish (23-23-30)
	6	---- ---	Retainer
	6	6024 711	Seal
	6	---- ---	Nut
16	1	2584 160-1	MOULDING PACKAGE, Quarter Panel Upper and Lower End (23-23-39)
	2	2529 101	Retainer
	2	6024 679	Nut
17	1	2584 164-5	MOULDING PACKAGE, Quarter Panel Front (23-23-39)
	2	6024 271	Screw
18	2	2421 912	MOULDING PACKAGE, Body Side Sill Outside Panel (23-23-2)
	14	6001 083	Retainer
	4	6023 681	Screw
19	1	2584 134-5	MOULDING PACKAGE, Door Outside (23-23-32)
	4	2529 108-9	Clip
	4	9417 621	Nut
	10	6001 626	Clip
	8	6001 634	Clip

All Packages Include Attaching Parts

Part Type Code is Indicated in Parentheses

EXTERIOR VIEW - CORONET W-H CONVERTIBLE COUPE

MyMopar.com

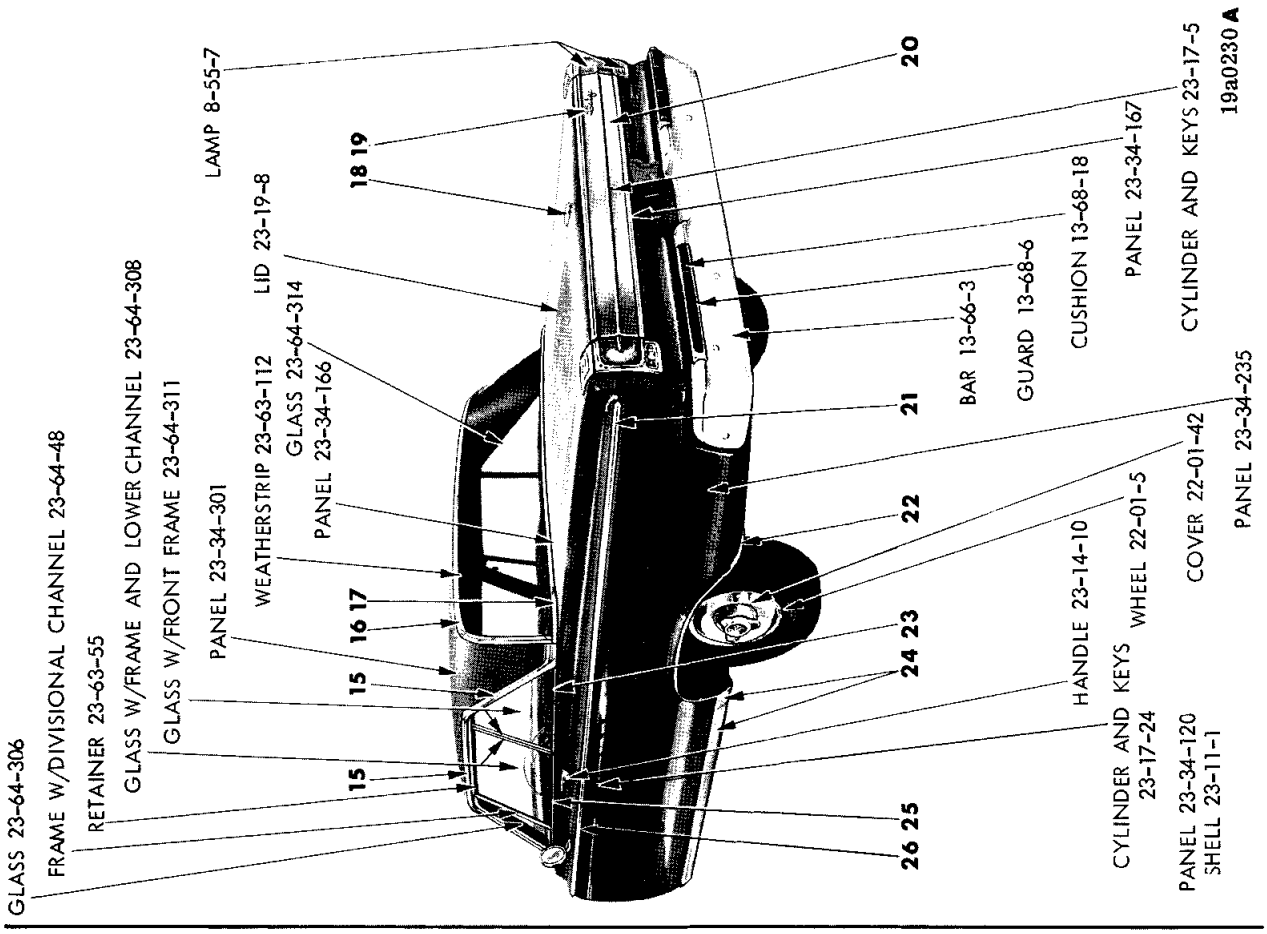

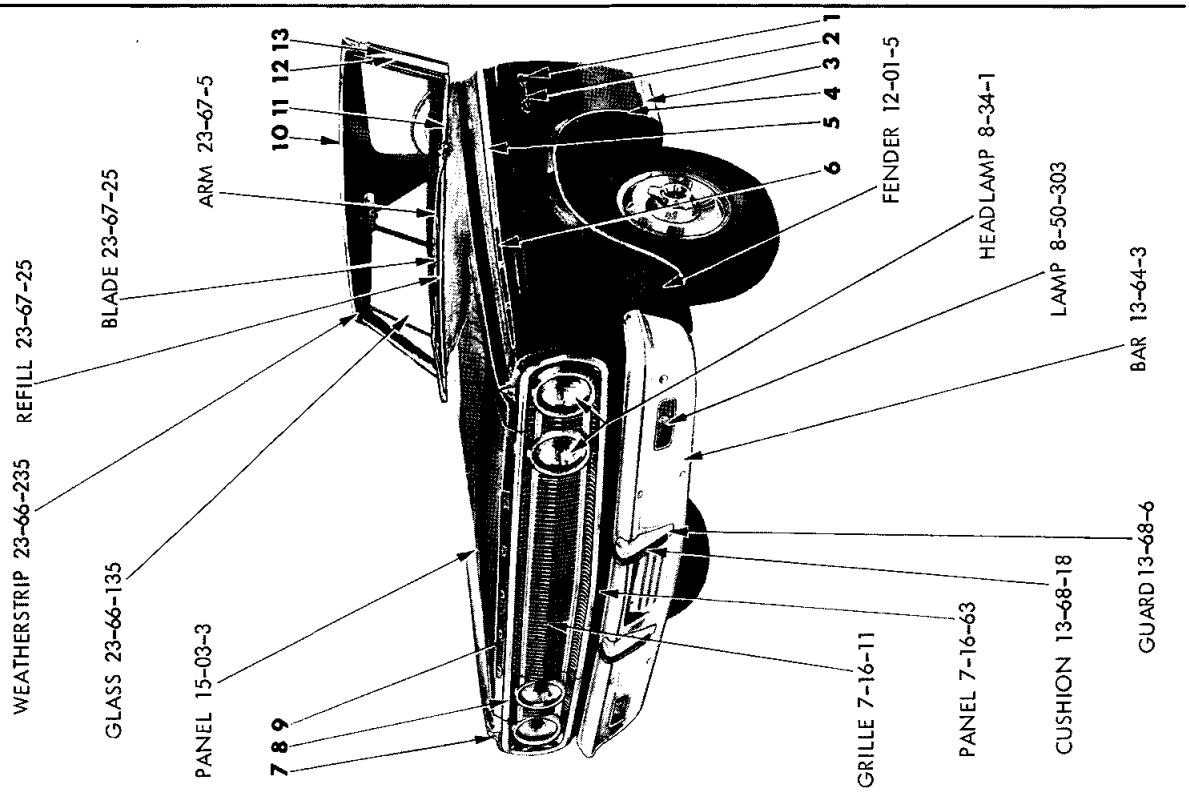

EXTERIOR VIEW - CORONET W-P 2 DOOR HARDTOP

MyMopar.com

REF. NO.	QTY	PART NUMBER	DESCRIPTION
1	2	2449 936	NUMERAL, Fender Side, 500 (12-15-21)
	4	6023 260	Nut
2	2	2449 934	NAME PLATE, Fender Side, Coronet (12-15-21)
	8	---- ---	Washer
	8	6023 260	Nut
3	1	2584 500-1	CAP PACKAGE, Fender Wheel Opening to Sill Moulding (12-15-9)
	6	6024 271	Screw
4	1	2449 930-1	MOULDING, Fender Wheel Opening (12-15-2)
	16	6024 271	Screw
5	1	2584 068-9	MOULDING PACKAGE, Fender Side Rear (12-15-2)
	8	6001 626	Retainer
	2	---- ---	Bolt
	2	6010 008	Nut
	2	---- ---	Nut
6	1	2584 070-1	MOULDING PACKAGE, Fender Side Front (12-15-2)
	6	6023 685	Nut
7	2	2449 932	MEDALLION, Fender Front (12-15-21)
	4	6000 616	Nut
8	1	2584 063	MOULDING PACKAGE, Hood Front (15-25-2)
	5	---- ---	Nut
	3	---- ---	Palnut
	3	6001 682	Retainer
9	2	2417 825	LETTER, Hood Front Name, "D" (15-06-16)
	1	2417 826	"O"
	1	2417 828	"G"
	1	2417 829	"E"
	10	6000 616	Nut
10	1	2218 594	MOULDING, Windshield Outside Upper (23-23-65)
	8	6001 537	Retainer and Screw
11	1	2218 595	MOULDING, Windshield Outside Finish Lower (23-23-65)
	10	6001 537	Retainer and Screw
12	1	2218 596-7	MOULDING, Windshield Outside Finish Side (23-23-65)
	6	6023 247	Screw
13	1	2492 712-3	MOULDING, Windshield Outside Side Upper Extension (23-23-65)
15	1	2525 556-7	MOULDING PACKAGE, Roof Side Drain Trough Front & Rear (23-59-61)
	6	2573 062	Clip
	6	6024 271	Screw
	2	6024 718	Washer
	★	---- ---	Sealer 2 120 375 Nut
16	1	2495 276-7	MOULDING PACKAGE, Rear Window Outside Upper and Side (23-23-52)
	14	6001 084	Retainer and Screw
17	1	2495 274-5	MOULDING PACKAGE, Rear Window Outside Lower (23-23-52)
	12	6001 084	Retainer and Screw
18	1	2528 449	MEDALLION, Deck Lid Outside (23-19-114)
	2	---- ---	Seal
	2	6013 114	Nut
19	1	2526 340	NAME PLATE, Deck Lid Finish Panel, Dodge (23-19-114)
	3	1839 995	Nut
20	1	2526 337	PANEL, Deck Lid Finish (23-23-30)
	6	6022 007	Seal
	6	152 259	Nut
	6	9418 419	Screw
21	1	2584 170-1	MOULDING PACKAGE, Quarter Panel (23-23-39)
	10	6001 626	Clip
	10	6001 706	Retainer
	10	116 000	Nut
22	1	2526 356-7	MOULDING, Quarter Panel Wheel Opening (23-23-39)
	14	6024 271	Screw
23	1	2495 320-1	MOULDING PACKAGE, Quarter Panel Belt Upper (23-23-39)
	4	6001 718	Clip
	4	6001 717	Clip
	4	6001 716	Clip
24	1	2584 158-9	MOULDING PACKAGE, Body Side Sill (23-23-2)
	18	6001 492	Clip
	18	6023 975	Screw
25	1	2495 318-9	MOULDING PACKAGE, Front Door Outside Belt Upper (23-23-32)
	4	6001 718	Clip
	4	6001 717	Clip
	6	6001 716	Clip
26	1	2584 132-3	MOULDING PACKAGE, Door Outside (23-23-32)
	4	6001 702	Retainer
	4	---- ---	Screw
	4	9414 106	Washer
	10	6001 626	Clip

All Packages Include Attaching Parts

Part Type Code is Indicated in Parentheses

EXTERIOR VIEW - CORONET W-P 2 DOOR HARDTOP

MyMopar.com

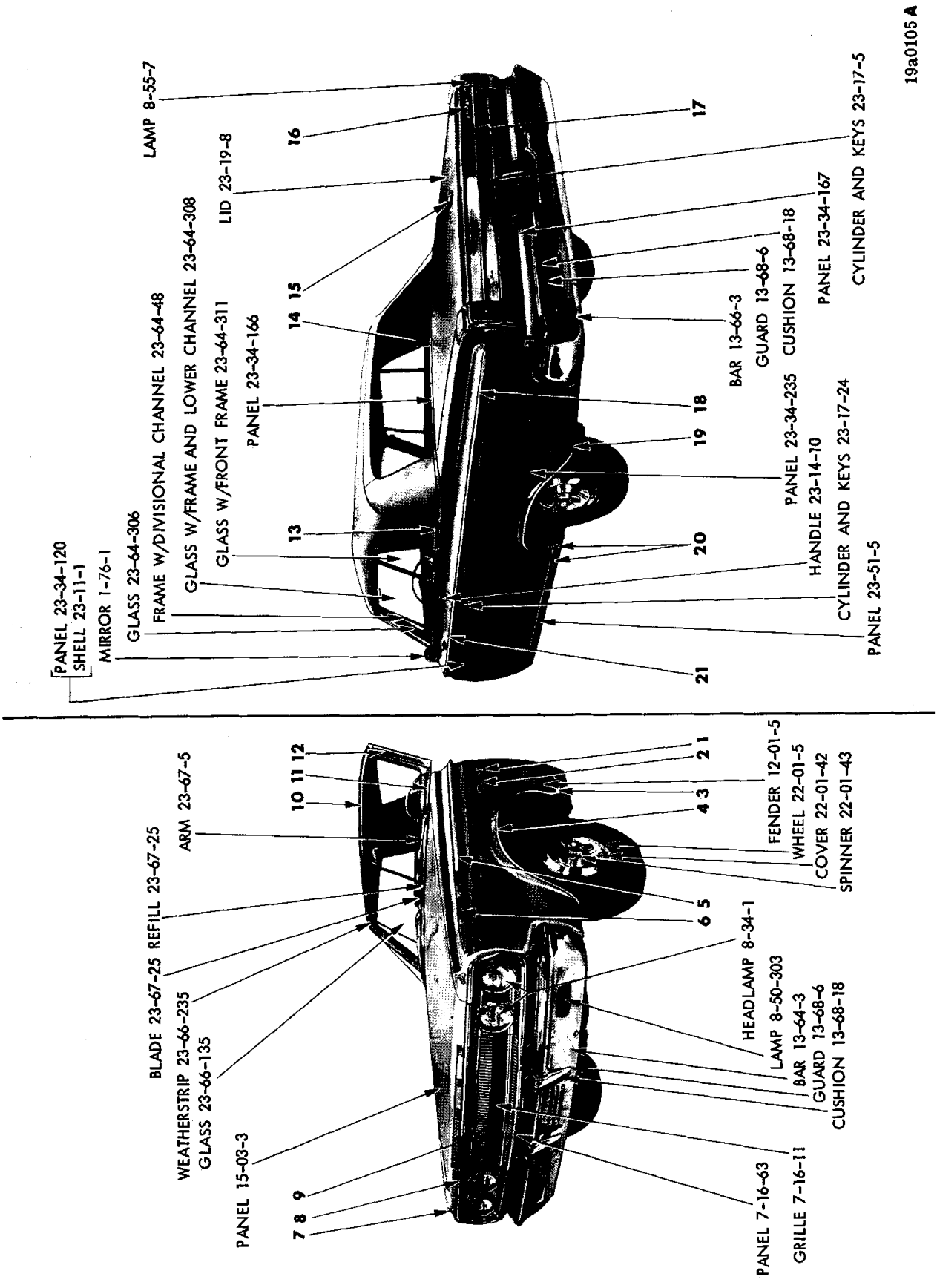

EXTERIOR VIEW - CORONET W-P CONVERTIBLE COUPE

MyMopar.com

REF. NO.	QTY	PART NUMBER	DESCRIPTION
1	2	2449 936	NUMERAL, Fender Side, "500" (12-15-21)
	4	6023 260	Nut
2	2	2449 934	NAME PLATE, Fender Side, Coronet (12-15-21)
	8	---- ---	Seal
	8	6023 260	Nut
3	1	2584 500-1	CAP PACKAGE, Fender Wheel Opening to Sill Moulding (12-15-9)
	6	6024 271	Screw
4	1	2449 930-1	MOULDING, Fender Wheel Opening (12-15-2)
	16	6024 271	Screw
5	1	2584 068-9	MOULDING PACKAGE, Fender Side Rear (12-15-2)
	8	6001 626	Retainer
	2	---- ---	Bolt
	2	6010 008	Nut
	2	---- ---	Nut
6	1	2584 070-1	MOULDING PACKAGE, Fender Side Front (12-15-2)
	6	6023 685	Nut
7	2	2449 932	MEDALLION, Fender Front (12-15-21)
	4	6000 616	Nut
8	1	2584 063	MOULDING PACKAGE, Hood Front (15-25-2)
	5	---- ---	Nut
	3	---- ---	Palnut
	3	6001 682	Retainer
9	2	2417 825	LETTER, Hood Front Name, "D" (15-06-16)
	1	2417 826	"O"
	1	2417 828	"G"
	1	2417 829	"E"
	10	6000 616	Nut
10	1	2482 898-9	MOULDING, Windshield Header Outside (23-23-65)
	7	162 402	Screw
11	1	2218 595	MOULDING, Windshield Outside Finish Lower (23-23-65)
12	1	2218 596-7	MOULDING, Windshield Outside Finish Side (23-23-65)
	6	6024 271	Screw
13	1	2483 848-9	MOULDING, Quarter Panel Belt (23-23-39)
	10	6024 477	Fastener
14	1	2448 458-9	MOULDING PACKAGE, Deck Upper Panel (23-23-31)
	10	6024 477	Fastener
15	1	2528 449	MEDALLION, Deck Lid (23-19-114)
	2	---- ---	Seal
	2	6013 114	Nut
16	1	2526 340	NAME PLATE, Deck Lid (23-19-114)
	3	1839 995	Nut
17	1	2526 337	PANEL, Deck Lid Finish (23-23-30)
	6	6022 007	Seal
	6	152 259	Nut
	6	9418 419	Screw
18	1	2584 170-1	MOULDING PACKAGE, Quarter Panel (23-23-39)
	10	6001 626	Clip
	10	---- ---	Retainer
	10	116 000	Nut
19	1	2526 356-7	MOULDING, Quarter Panel Wheel Opening (23-23-39)
	14	6024 271	Screw
20	1	2584 158-9	MOULDING PACKAGE, Body Side Sill, w/Cap (23-23-2)
	18	6001 492	Clip
	18	6023 975	Screw
21	1	2584 132-3	MOULDING PACKAGE, Door (23-23-32)
	4	6001 702	Retainer
	4	---- ---	Screw
	4	9414 106	Washer
	10	6001 626	Clip

All Packages Include Attaching Parts

Part Type Code is Indicated in Parentheses

EXTERIOR VIEW - CORONET W-P CONVERTIBLE COUPE

MyMopar.com

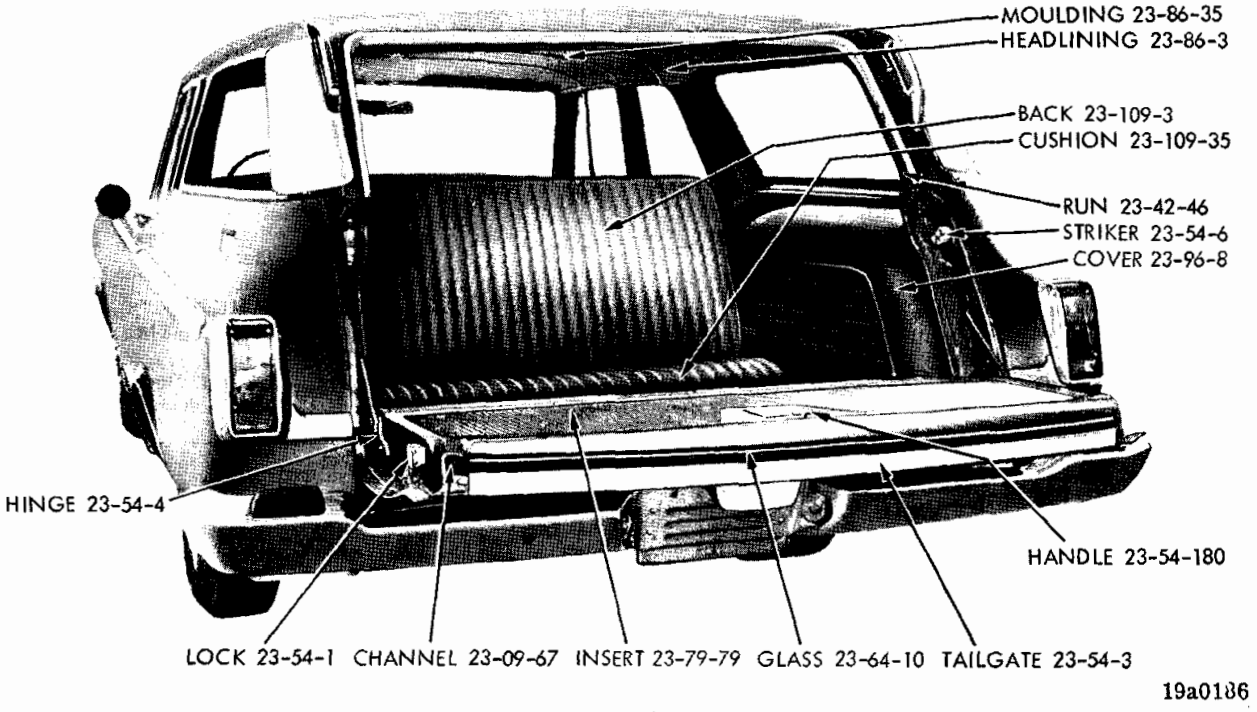

REAR INTERIOR VIEW - CORONET STATION WAGON

NOTES

MyMopar.com

NOTES

MyMopar.com

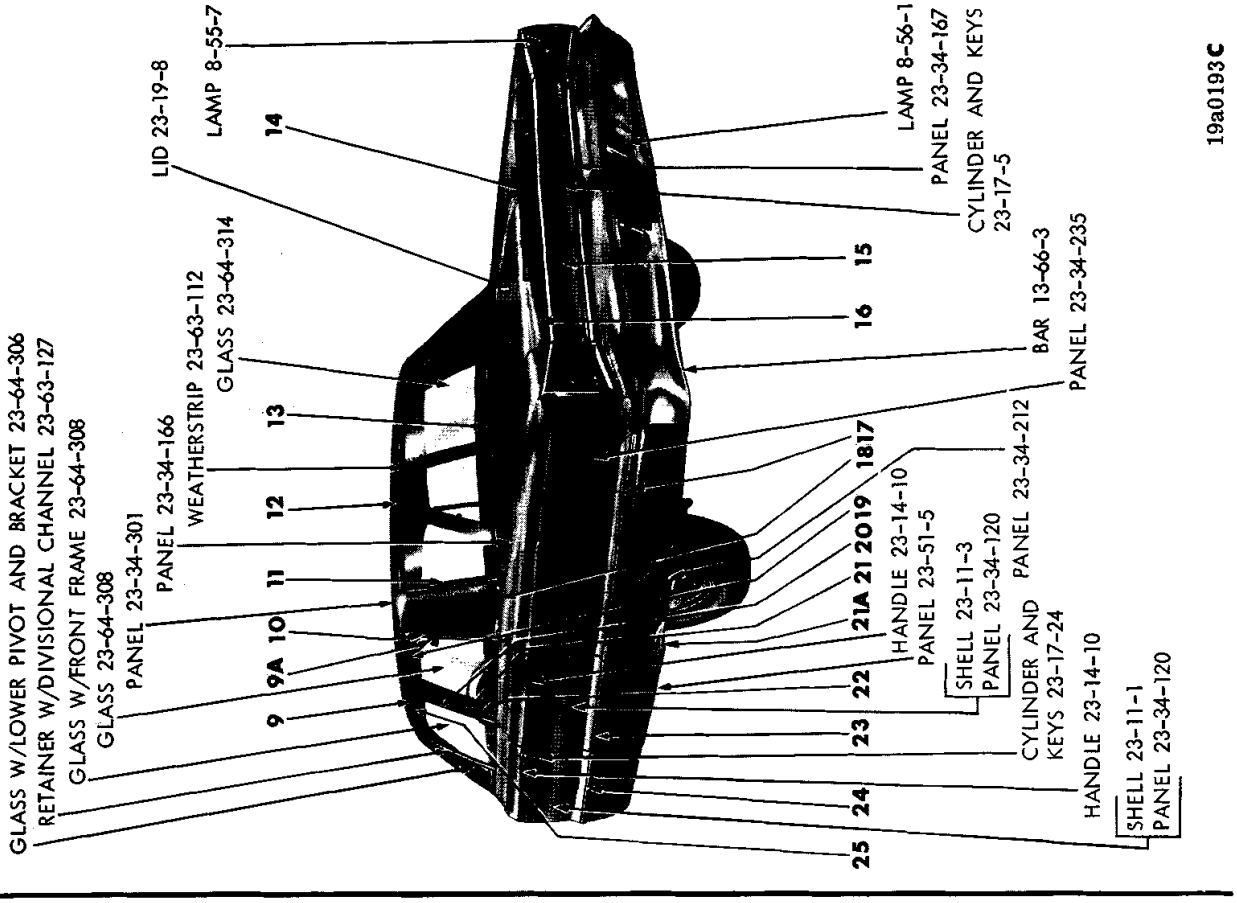

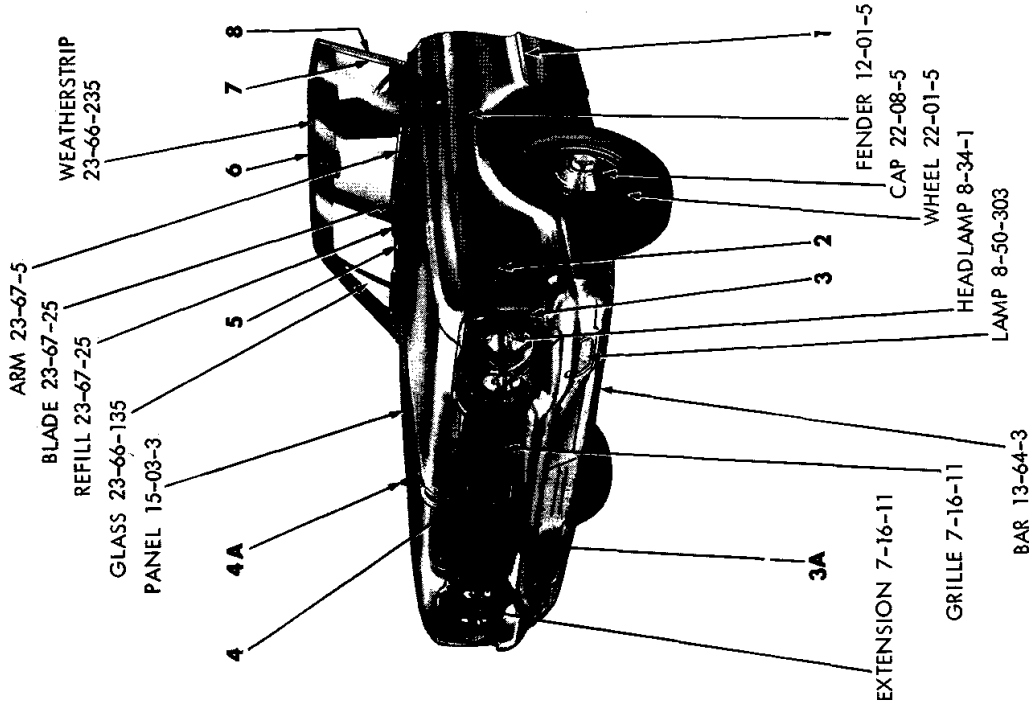

EXTERIOR VIEW - DODGE D2 POLARA 4 DOOR SEDAN

MyMopar.com

REF. NO.	QTY	PART NUMBER	DESCRIPTION
1	1	2525 820-1	MOULDING PACKAGE, Fender Side (12-15-2)
	4	6001 641	Retainer
	2	---- ---	Nut
2	2	2524 239	NAME PLATE, Fender Side, Polara (12-15-21)
	4	6024 723	Washer
	4	---- ---	Nut
3	1	2525 822-3	MOULDING PACKAGE, Fender Front (12-15-2)
	6	6024 723	Washer
	6	9411 618	Nut
3A	1	2525 587	MOULDING PACKAGE, Hood Front (15-25-2)
	8	116 000	Nut
	8	6024 723	Washer
4	2	2417 825	LETTER, Hood Front Name, "D" (15-06-16)
	1	2417 826	"O"
	1	2417 828	"G"
	1	2417 829	"E"
4A	1	2524 237	ORNAMENT, Hood Front (15-03-18)
5	1	2584 110-1	MOULDING PACKAGE, Windshield Outside Lower (23-23-65)
	10	6001 697	Retainer
6	1	2584 104	MOULDING PACKAGE, Windshield Outside Upper (23-23-65)
	8	6001 648	Retainer
7	1	2584 108-9	MOULDING PACKAGE, Windshield Outside Side (23-23-65)
	8	6001 648	Retainer
8	1	2529 264-5	MOULDING, Body Front Pillar Drain Trough (23-59-61)
9	1	2526 462-3	MOULDING, Roof Side Drain Trough (23-59-61)
9A	1	2492 800-1	MOULDING, Rear Door Window Opening Frame Rear (23-23-33)
10	1	2526 464-5	MOULDING, Roof Side Drain Trough Rear (23-59-61)
11	1	2584 100-1	MOULDING PACKAGE, Rear Window Outside Side (23-23-52)
	6	6001 648	Retainer and Screw
12	1	2584 102-3	MOULDING PACKAGE, Rear Window Outside Upper (23-23-52)
	8	6001 648	Retainer and Screw
13	1	2584 098	MOULDING PACKAGE, Rear Window Outside Lower (23-23-65)
	8	6001 648	Retainer and Screw
14	1	2528 648	LETTER "D", Deck Lid Name (23-19-114)
	1	2528 649	"O"
	1	2528 650	"D"
	1	2528 651	"G"
	1	2528 652	"E"
	10	152 259	Nut and Seal
15	1	2584 127	MOULDING PACKAGE, Deck Lid Lower (23-23-30)
	8	9417 621	Nut
	8	6001 708	Retainer and Seal
16	1	2584 126	MOULDING PACKAGE, Deck Lid Upper (23-23-30)
	8	9417 621	Nut
	8	6001 708	Retainer and Seal
17	1	2584 326-7	MOULDING PACKAGE, Quarter Outside (23-23-39)
	12	6001 660	Retainer
	12	9417 621	Nut
	4	6001 662	Retainer
	4	---- ---	Nut
18	1	2584 180-1	MOULDING PACKAGE, Roof Side Extension Belt (23-23-42)
	4	2574 024	Retainer and Seal
	4	---- ---	Nut
	2	6001 799	Retainer and Seal
19	1	2492 798-9	MOULDING, Rear Door Window Opening Frame Upper (Special Equipment) (23-23-33)
20	1	2492 784-5	MOULDING, Front Door Window Opening Frame Rear (Special Equipment) (23-23-32)
21	1	2570 110-1	PANEL, Body Center Pillar Outside Finish Upper (Special Equipment)(23-23-16)
21A	1	2584 524-5	DEFLECTOR PACKAGE, Rear Wheel Opening Panel Stone (23-23-240)
	4	273 329	Nut
	4	6024 702	Seal
22	1	2492 796-7	MOULDING, Rear Door Window Opening Frame Front (Special Equipment) (23-23-33)
23	1	2584 324-5	MOULDING PACKAGE, Rear Door Outside (23-23-33)
	18	6001 641	Clip
24	2	2584 328	MOULDING PACKAGE, Front Door Outside (23-23-32)
	18	6001 641	Clip
25	1	2492 782-3	MOULDING, Front Door Window Opening Frame Upper (Special Equipment) (23-23-32)

All Packages Include Attaching Parts

Part Type Code is Indicated in Parentheses

EXTERIOR VIEW - DODGE D2 POLARA 4 DOOR SEDAN

MyMopar.com

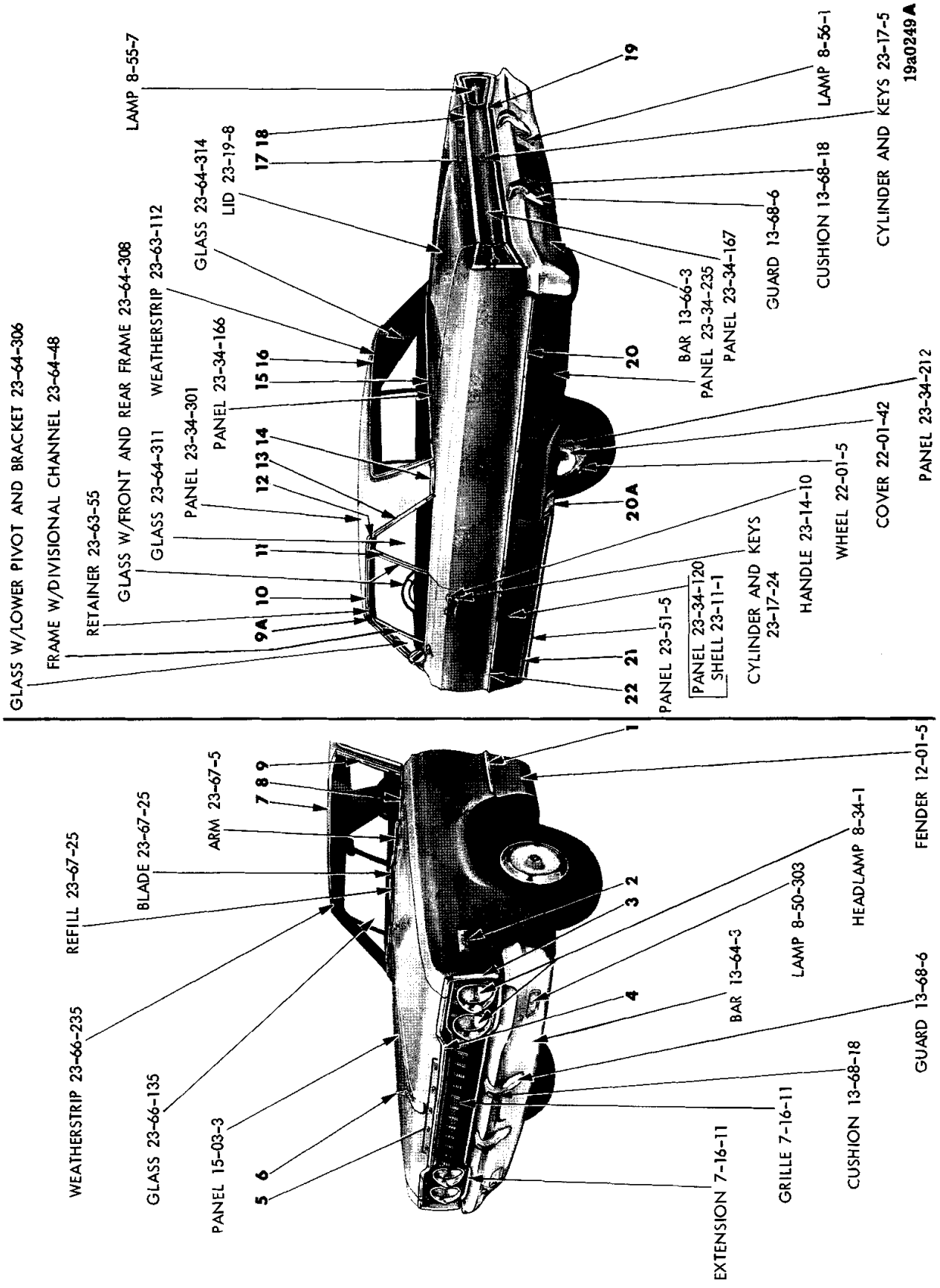

EXTERIOR VIEW - DODGE D-L 2 DOOR HARDTOP

MyMopar.com

REF. NO.	QTY	PART NUMBER	DESCRIPTION
1	1	2525 820-1	MOULDING PACKAGE, Fender Side (12-15-2)
	4	6001 641	Retainer and Seal
	2	---- ---	Nut
2	2	2524 239	NAME PLATE, Fender Side, Polara (12-15-21)
	4	6024 723	Washer
	4	---- ---	Nut
3	1	2525 822-3	MOULDING PACKAGE, Fender Front (12-15-2)
	6	6024 723	Washer
	6	9411 618	Nut
4	1	2525 587	MOULDING PACKAGE, Hood Front (15-25-2)
5	2	2417 825	LETTER, Hood Front Name, "D" (15-06-16)
	1	2417 826	"O"
	1	2417 828	"G"
	1	2417 829	"E"
6	1	2524 007	ORNAMENT, Hood Front (15-03-18)
7	1	2584 099	MOULDING PACKAGE, Windshield Outside Upper (23-23-65)
	8	6001 648	Retainer
8	1	2584 110-1	MOULDING PACKAGE, Windshield Outside Lower (23-23-65)
	10	6001 697	Retainer
9	1	2584 106-7	MOULDING PACKAGE, Windshield Outside Side (23-23-65)
	8	6001 648	Retainer
9A	1	2574 850-1	MOULDING, Front Pillar Upper, use w/Vinyl Roof (23-23-14)
	2	6023 682	Screw
10	1	2526 480-1	MOULDING, Roof Drain Trough Front (w/o Vinyl Roof) (23-59-61)
	1	2605 010-1	MOULDING, Roof Side Drain Trough Front (w/Vinyl Roof) (23-59-61)
11	1	2529 144-5	MOULDING, Quarter Window Glass Front (23-23-73)
12	1	2526 484-5	COVER, Roof Drain Trough Front (23-59-57)
13	1	2526 482-3	MOULDING, Roof Drain Trough Rear (w/o Vinyl Roof) (23-59-61)
	1	2605 012-3	MOULDING, Roof Side Drain Trough Rear (w/Vinyl Roof) (23-59-61)
14	1	2584 432-3	MOULDING PACKAGE, Roof Outside Belt, w/o Vinyl Roof (23-23-42)
	1	2584 430-1	MOULDING PACKAGE, Roof Outside Belt (w/Vinyl Roof) (23-23-42)
	4	---- ---	Washer
	4	9411 618	Nut
15	1	2525 595	MOULDING PACKAGE, Rear Window Outside Lower (23-23-52) (Note #1)
	7	6001 648	Retainer and Screw
	1	2807 138-9	MOULDING PACKAGE, Rear Window Outside Lower (23-23-52) (Note #2)
16	1	2525 596-7	MOULDING PACKAGE, Rear Window Outside Upper and Side (23-23-52) (Note #1)
	14	6001 648	Retainer and Screw
	1	2807 140-1	MOULDING PACKAGE, Rear Window Outside Upper and Side (23-23-52) (Note #2)
17	1	2528 648	LETTER "D", Deck Lid Name (23-19-114)
	1	2528 649	"O"
	1	2528 650	"D"
	1	2528 651	"G"
	1	2528 652	"E"
	10	152 259	Nut
18	1	2584 126	MOULDING PACKAGE, Deck Lid Upper (23-23-30)
	8	6001 708	Retainer
	8	9417 621	Nut
19	1	2584 127	MOULDING PACKAGE, Deck Lid Lower (23-23-30)
	8	6001 708	Retainer
	8	6024 692	Nut
20	2	2584 322	MOULDING PACKAGE, Quarter Outside (23-23-39)
	4	6001 652	Retainer
	4	---- ---	Nut
	12	6001 660	Retainer
	12	9417 621	Nut
20A	1	2584 524-5	DEFLECTOR PACKAGE, Rear Wheel Opening Panel Stone (23-34-240)
	4	273 329	Nut
	4	6024 702	Seal
21	1	2584 278-9	MOULDING PACKAGE, Body Side Sill (23-23-2)
	4	6023 682	Screw
	18	6001 750	Retainer
22	2	2584 329	MOULDING PACKAGE, Door Outside (23-23-32)
	4	6001 662	Retainer
	4	---- ---	Nut
	2	9417 621	Nut
	2	6001 677	Retainer
	12	6001 641	Clip

NOTE 1: UP TO SERIAL NO. 195358

NOTE 2: AFTER SERIAL NO. 195358

All Packages Include Attaching Parts

Part Type Code is Indicated in Parentheses

EXTERIOR VIEW - DODGE D-L 2 DOOR HARDTOP

MyMopar.com

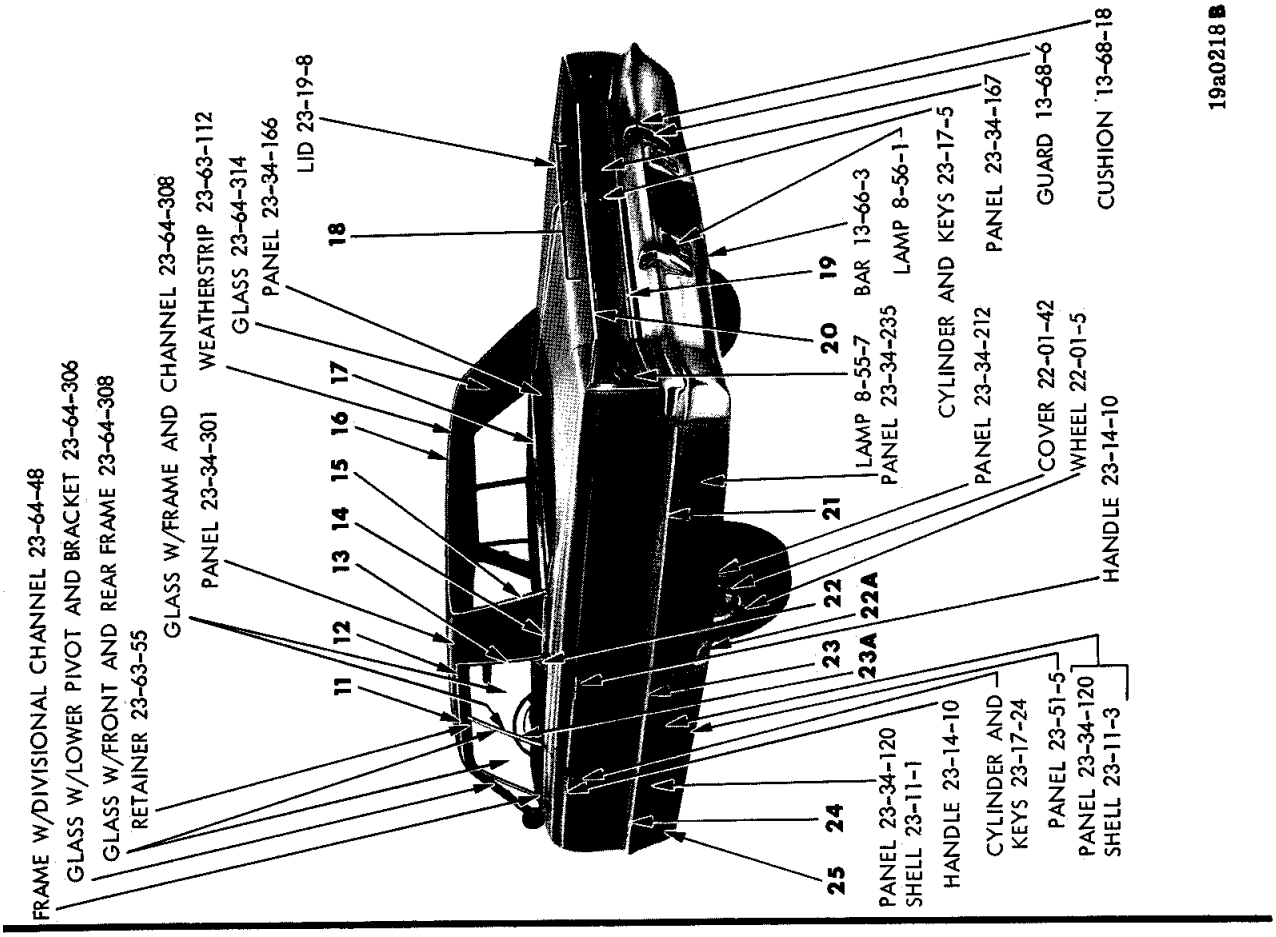

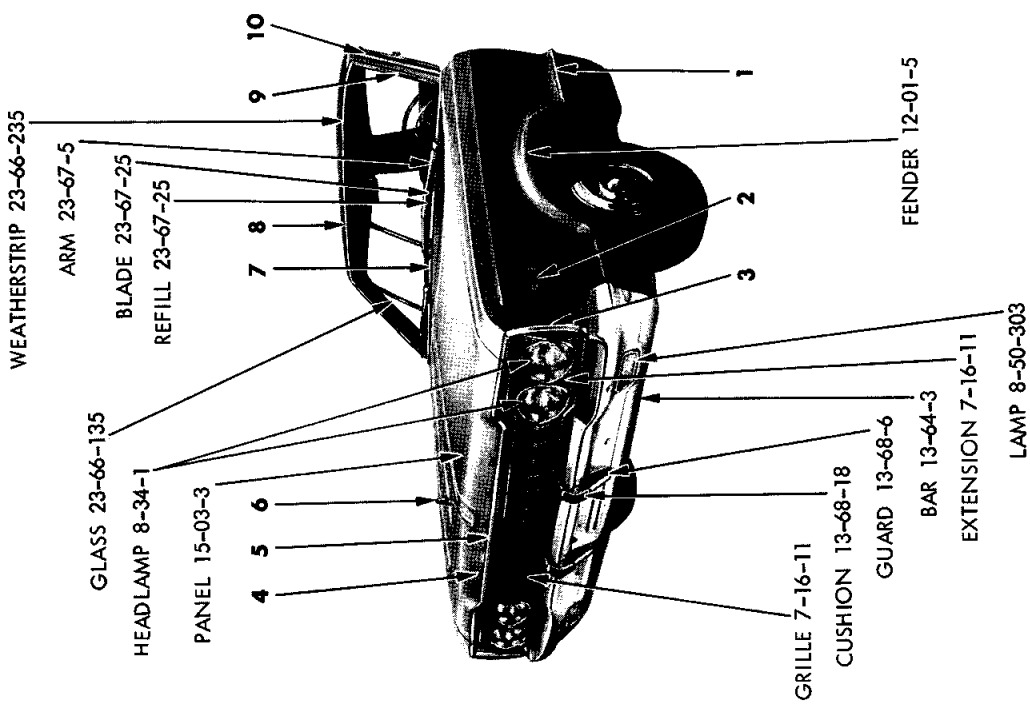

EXTERIOR VIEW - DODGE D-L 4 DOOR HARDTOP

MyMopar.com

REF. NO.	QTY	PART NUMBER	DESCRIPTION
1	1	2525 820-1	MOULDING PACKAGE, Fender Side (12-15-2)
	4	6001 641	Retainer
	2	---- ---	Nut
2	2	2524 239	NAME PLATE, Fender Side, Polara (12-15-21)
	4	6024 723	Washer
	4	---- ---	Nut
3	1	2525 822-3	MOULDING PACKAGE, Fender Front (12-15-2)
	6	6024 723	Washer
	6	9411 618	Nut
4	2	2417 825	LETTER, Hood Front Name, "D" (15-06-16)
	1	2417 826	"O"
	1	2417 828	"G"
	1	2417 829	"E"
	10	6000 616	Nut
5	1	2525 587	MOULDING PACKAGE, Hood Front (15-25-2)
	8	116 000	Nut
	8	6024 577	Stud
	8	6024 723	Washer
6	1	2524 007	ORNAMENT, Hood Top (15-03-18)
7	1	2584 110-1	MOULDING PACKAGE, Windshield Outside Lower (23-23-65)
	10	6001 697	Retainer
8	1	2584 099	MOULDING PACKAGE, Windshield Outside Upper (23-23-65)
	8	6001 648	Retainer and Screw
9	1	2584 106-7	MOULDING PACKAGE, Windshield Outside Side (23-23-65)
	8	6001 648	Retainer and Screw
10	1	2529 442-3	MOULDING, Body Front Pillar Drain Trough, w/o Vinyl Roof (23-59-61)
	1	2605 436-7	MOULDING, Body Front Pillar Drain Trough, w/Vinyl Roof (23-59-61)
11	1	2529 438-9	MOULDING, Roof Side Drain Trough, w/o Vinyl Roof (23-59-61)
	1	2605 438-9	MOULDING, Roof Side Drain Trough, w/Vinyl Roof (23-59-61)
12	1	2573 546-7	COVER, Roof Side Drain Trough Moulding Rear (23-59-57)
13	1	2529 440-1	MOULDING, Roof Side Drain Trough Rear, w/o Vinyl Roof (23-59-61)
	1	2605 440-1	MOULDING, Roof Side Drain Trough Rear, w/Vinyl Roof (23-59-61)
14	1	2584 424-5	MOULDING PACKAGE, Roof Side Extension Belt, w/o Vinyl Roof (23-23-42)
	6	---- ---	Washer
	6	9411 618	Nut
	1	2584 424-5	MOULDING PACKAGE, Roof Side Extension Belt, w/Vinyl Roof (23-23-42)
	6	---- ---	Washer
	6	---- ---	Nut
15	1	2525 592-3	MOULDING PACKAGE, Rear Window Outside Side (23-23-52)
	6	6001 648	Retainer and Screw
16	1	2525 598-9	MOULDING PACKAGE, Rear Window Outside Upper (23-23-52)
	8	6001 648	Retainer and Screw
17	1	2525 594	MOULDING PACKAGE, Rear Window Outside Lower (23-23-52)
	8	6001 648	Retainer and Screw
18	1	2528 648	LETTER "D", Deck Lid Name (23-19-114)
	1	2528 649	"O"
	1	2528 650	"D"
	1	2528 651	"G"
	1	2528 652	"E"
	10	152 259	Nut
19	1	2584 127	MOULDING PACKAGE, Deck Lid Lower (23-23-30)
	8	9417 621	Nut
	8	6001 708	Retainer
20	1	2584 126	MOULDING PACKAGE, Deck Lid Upper (23-23-30)
	8	9417 621	Nut
	8	6001 708	Retainer
21	1	2584 326-7	MOULDING PACKAGE, Quarter Outside (23-23-39)
	4	6001 662	Retainer
	4	---- ---	Nut
	12	6001 660	Retainer
	12	9417 621	Nut
22	1	2571 178-9	ORNAMENT and WEATHERSTRIP, Rear Door Rear Outer (23-11-23) (23-63-33)
	4	6025 425	Screw
	2	9416 628	Screw
22A	1	2584 524-5	DEFLECTOR PACKAGE, Rear Wheel Opening Panel Stone (23-34-240)
	4	273 329	Nut
	4	6024 702	Seal
23	1	2584 324-5	MOULDING PACKAGE, Rear Door Outside (23-23-33)
	6	9417 621	Nut
	6	6001 677	Retainer
	18	6001 641	Clip
23A	1	2664 678-9	MOULDING w/Weatherstrip Retainer, Rear Door Window Frame Front (23-23-33) (23-63-105)
	10	6024 997	Screw
24	2	2584 328	MOULDING PACKAGE, Front Door Outside (23-23-32)
	6	9417 621	Nut
	6	6001 677	Retainer
	18	6001 641	Clip
25	1	2584 278-9	MOULDING PACKAGE, Body Side Sill (23-23-2)
	4	6023 682	Screw
	18	6001 750	Retainer

All Packages Include Attaching Parts

Part Type Code is Indicated in Parentheses

EXTERIOR VIEW - DODGE D-L 4 DOOR HARDTOP

MyMopar.com

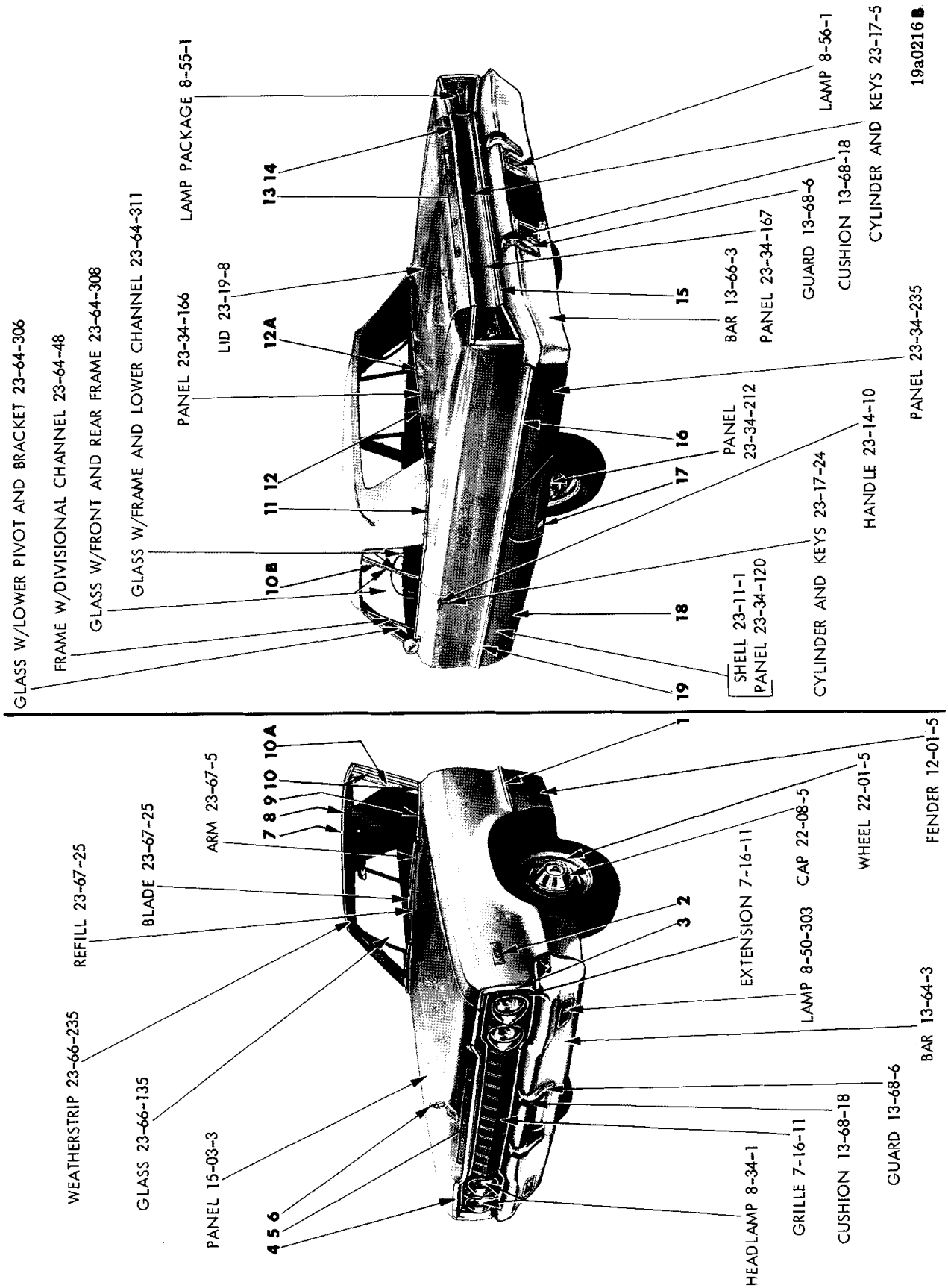

EXTERIOR VIEW - DODGE D-L CONVERTIBLE COUPE

MyMopar.com

REF. NO.	QTY	PART NUMBER	DESCRIPTION
1	1	2525 820-1	MOULDING PACKAGE, Fender Side (12-15-2)
	4	6001 641	Retainer
	2	---- ---	Nut
2	2	2524 239	NAME PLATE, Fender Side, Polara (12-15-21)
	4	6024 723	Washer
	4	---- ---	Nut
3	1	2525 822-3	MOULDING PACKAGE, Fender Front (12-15-2)
	6	6024 723	Washer
	6	9411 618	Nut
4	1	2525 587	MOULDING PACKAGE, Hood Front (15-25-2)
	8	116 000	Nut
	8	6024 577	Stud
	8	6024 723	Washer
5	2	2417 825	LETTER "D", Hood Front Name (15-06-16)
	1	2417 826	"O"
	1	2417 828	"G"
	1	2417 829	"E"
	10	6000 616	Nut
6	1	2524 007	ORNAMENT, Hood Front (15-03-18)
7	1	2584 099	MOULDING PACKAGE, Windshield Outside Upper (23-23-65)
	8	6001 648	Retainer
8	1	2484 602-3	MOULDING, Windshield Outside Header (23-23-65)
	5	6025 132	Screw
9	1	2584 110-1	MOULDING PACKAGE, Windshield Outside Lower (23-23-65)
	10	6001 697	Retainer
10	1	2481 844-5	MOULDING, Body Front Upper Pillar Outside (23-23-14)
	8	9415 214	Screw
	1	2528 660-1	EXTENSION, Body Front Pillar Outside Moulding Lower (23-23-14)
10A	1	2584 106-7	MOULDING PACKAGE, Windshield Outside Side (23-23-65)
	8	6001 648	Retainer
10B	1	2529 096-7	MOULDING, Quarter Window Glass Front (23-23-73)
11	1	2584 482-3	MOULDING PACKAGE, Quarter Panel Belt Rear (23-23-39)
	2	178 790	Screw
	6	6001 496	Fastener
12	1	2584 082-3	MOULDING PACKAGE, Deck Opening Upper Panel (23-23-31)
	20	2094 380	Fastener
12A	1	2584 081	CAP PACKAGE, Deck Opening Upper Panel Moulding (23-23-41)
	1	2094 380	Fastener
13	1	2528 648	LETTER "D", Deck Lid Name (23-19-114)
	1	2528 649	"O"
	1	2528 650	"D"
	1	2528 651	"G"
	1	2528 652	"E"
	10	152 259	Nut
14	1	2584 126	MOULDING PACKAGE, Deck Lid Upper (23-23-30)
	8	9417 621	Nut
	8	6001 708	Retainer
15	1	2584 127	MOULDING PACKAGE, Deck Lid Lower (23-23-30)
	8	9417 621	Nut
	8	6001 708	Retainer
16	2	2584 322	MOULDING PACKAGE, Quarter Outside (23-23-39)
	4	6001 662	Retainer
	4	---- ---	Nut
	12	6001 660	Retainer
	12	9417 621	Nut
	10	6001 641	Clip
17	1	2584 524-5	DEFLECTOR PACKAGE, Rear Wheel Opening Panel Stone (23-34-240)
	4	273 329	Nut
	4	6024 702	Seal
18	1	2584 278-9	MOULDING PACKAGE, Body Side Sill (23-23-2)
	4	6023 682	Screw
	18	6001 750	Retainer
19	2	2584 329	MOULDING PACKAGE, Door Outside (23-23-32)
	2	9417 621	Nut
	2	6001 677	Retainer
	12	6001 641	Clip

All Packages Include Attaching Parts

Part Type Code is Indicated in Parentheses

EXTERIOR VIEW - DODGE D-L CONVERTIBLE COUPE

MyMopar.com

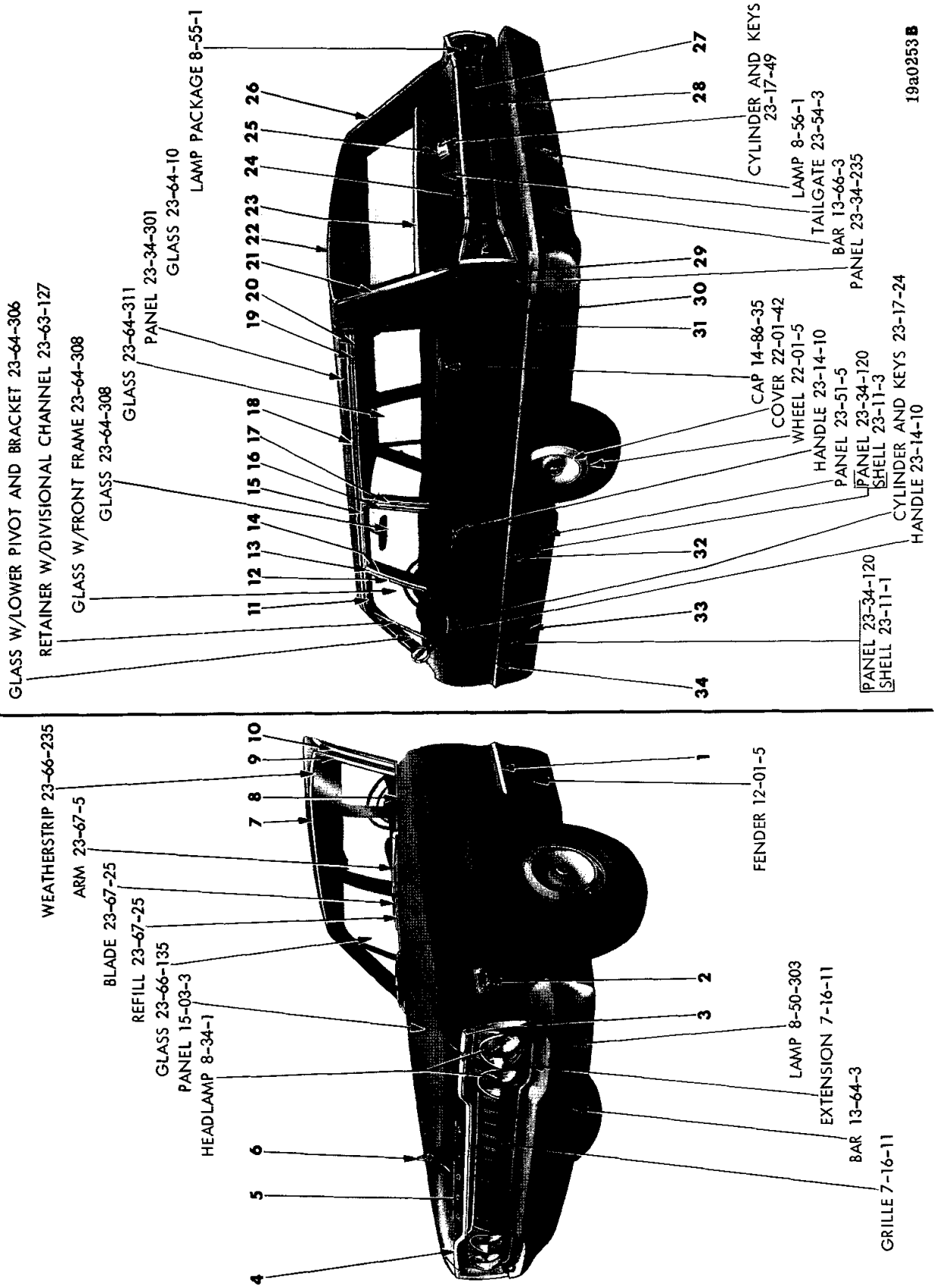

EXTERIOR VIEW - DODGE D-L STATION WAGON

MyMopar.com

REF. NO.	QTY	PART NUMBER	DESCRIPTION
1	1	2525 820-1	MOULDING PACKAGE, Fender Side (12-15-2)
	4	6001 641	Retainer and Seal
	2	---- ---	Nut
2	2	2524 239	NAME PLATE, Fender Side, Polara (12-15-21)
	4	6024 723	Washer
	4	---- ---	Nut
3	1	2525 822-3	MOULDING PACKAGE, Fender Front (12-15-2)
	6	6024 723	Washer
	6	9411 618	Nut
4	1	2525 587	MOULDING PACKAGE, Hood Front (15-25-2)
	8	116 000	Nut
	8	6024 577	Stud
	8	6024 723	Washer
5	2	2417 825	LETTER, Hood Front Name, "D" (15-06-16)
	1	2417 826	"O"
	1	2417 828	"G"
	1	2417 829	"E"
	10	6000 616	Nut
6	1	2524 007	ORNAMENT, Hood Top (15-03-18)
7	1	2584 104	MOULDING PACKAGE, Windshield Outside Upper (23-23-65)
	6	6001 648	Retainer
8	1	2584 110-1	MOULDING PACKAGE, Windshield Outside Lower (23-23-65)
	10	6001 697	Retainer
9	1	2584 108-9	MOULDING PACKAGE, Windshield Outside Side (23-23-65)
	8	6001 648	Retainer
10	1	2529 264-5	MOULDING, Body Front Pillar (23-59-61)
11	1	2492 782-3	MOULDING, Front Door Window Opening Frame Upper (Special Equipment) (23-23-32)
12	1	2492 784-5	MOULDING, Front Door Window Opening Frame Rear (Special Equipment) (23-23-32)
13	1	2570 110-1	PANEL, Body Center Pillar Outside Finish Upper (Special Equipment) (23-23-16)
	4	6023 247	Screw
14	1	2492 796-7	MOULDING, Rear Door Window Opening Frame Front (Special Equipment) (23-23-33)
15	1	2492 806-7	MOULDING, Rear Door Window Opening Frame Upper (Special Equipment) (23-23-33)
16	1	2492 808-9	MOULDING, Rear Door Window Opening Frame Rear (Special Equipment) (23-23-33)
17	1	2526 530-1	MOULDING, Qtr. Wdo. Outside Frt. (Primed)(23-23-73)
	1	2528 562-3	MOULDING, Qtr. Wdo. Outside Frt. (Stainless Steel) (23-23-73)
18	1	2627 148-9	MOULDING, Roof Side Drain Trough Rear (23-59-61)
19	1	2584 450-1	MOULDING PACKAGE, Qtr. Wdo. Outside Upr. (Primed)(23-23-73)
	12	6001 837	Retainer
	2	2529 938	Seal
	12	6025 001	Nut

All Packages Include Attaching Parts

REF. NO.	QTY	PART NUMBER	DESCRIPTION
20	1	2528 594-5	COVER PACKAGE, Qtr. Wdo. Outside Upr. Mldg. (Stainless Steel) (23-23-73)
	12	116 000	Nut
21	1	2584 446-7	MOULDING PACKAGE, Rear Upper Pillar Outside (23-23-60)
	6	---- ---	Clip
22	1	2584 421	MOULDING PACKAGE, Roof Outside Rear (23-23-42)
	8	6001 816	Clip
	1	2586 106	MOULDING PACKAGE, Roof Outside Rear (used w/Outside Assist Handle) (23-23-42)
	8	6001 816	Clip
23	1	2528 795	MOULDING PACKAGE, Tailgate Outside Belt (23-23-61)
24	1	2584 097	MOULDING PACKAGE, Tailgate Outside Upper (23-23-61)
	6	116 000	Nut
	6	6001 729	Retainer
25	1	2486 686	ORNAMENT, Tailgate Electric Window Regulator Outside (23-54-11)
	3	---- ---	Stud
26	1	2584 444-5	MOULDING PACKAGE, Rear Upper Pillar Tailgate Opening (23-23-60)
	6	6001 620	Clip
27	2	2528 648	LETTER "D", Tailgate Name (23-54-11)
	1	2528 649	"O"
	1	2528 651	"G"
	1	2528 652	"E"
	10	152 259	Nut
28	1	2584 097	MOULDING PACKAGE, Tailgate Outside Lower (23-23-61)
	6	116 000	Nut
	6	6001 729	Retainer
29	1	2584 641	MOULDING PACKAGE, Roof Top Outside Rear (use w/Two Tone Paint) (23-23-42)
	2	6001 591	Retainer
	2	116 000	Nut
	5	6001 709	Clip and Seal
30	1	2584 642-3	MOULDING PACKAGE, Roof Top Outside Rear Corner (use w/Two Tone Paint)(23-23-42)
	2	6001 498	Clip and Seal
31	1	2584 296-7	MOULDING PACKAGE, Quarter Outside (23-23-39)
	12	6001 660	Retainer
	12	9417 621	Nut
32	1	2584 324-5	MOULDING PACKAGE, Rear Door Outside (23-23-33)
	6	9417 621	Nut
	6	6001 677	Retainer
	18	6001 641	Clip
33	1	2584 278-9	MOULDING PACKAGE, Body Side Sill (23-23-2)
	4	6023 682	Screw
	18	6001 750	Retainer
34	2	2584 328	MOULDING PACKAGE, Front Door Outside (23-23-32)
	6	9417 621	Nut
	6	6001 677	Retainer
	18	6001 641	Clip

Part Type Code is Indicated in Parentheses

EXTERIOR VIEW - DODGE D-L STATION WAGON

MyMopar.com

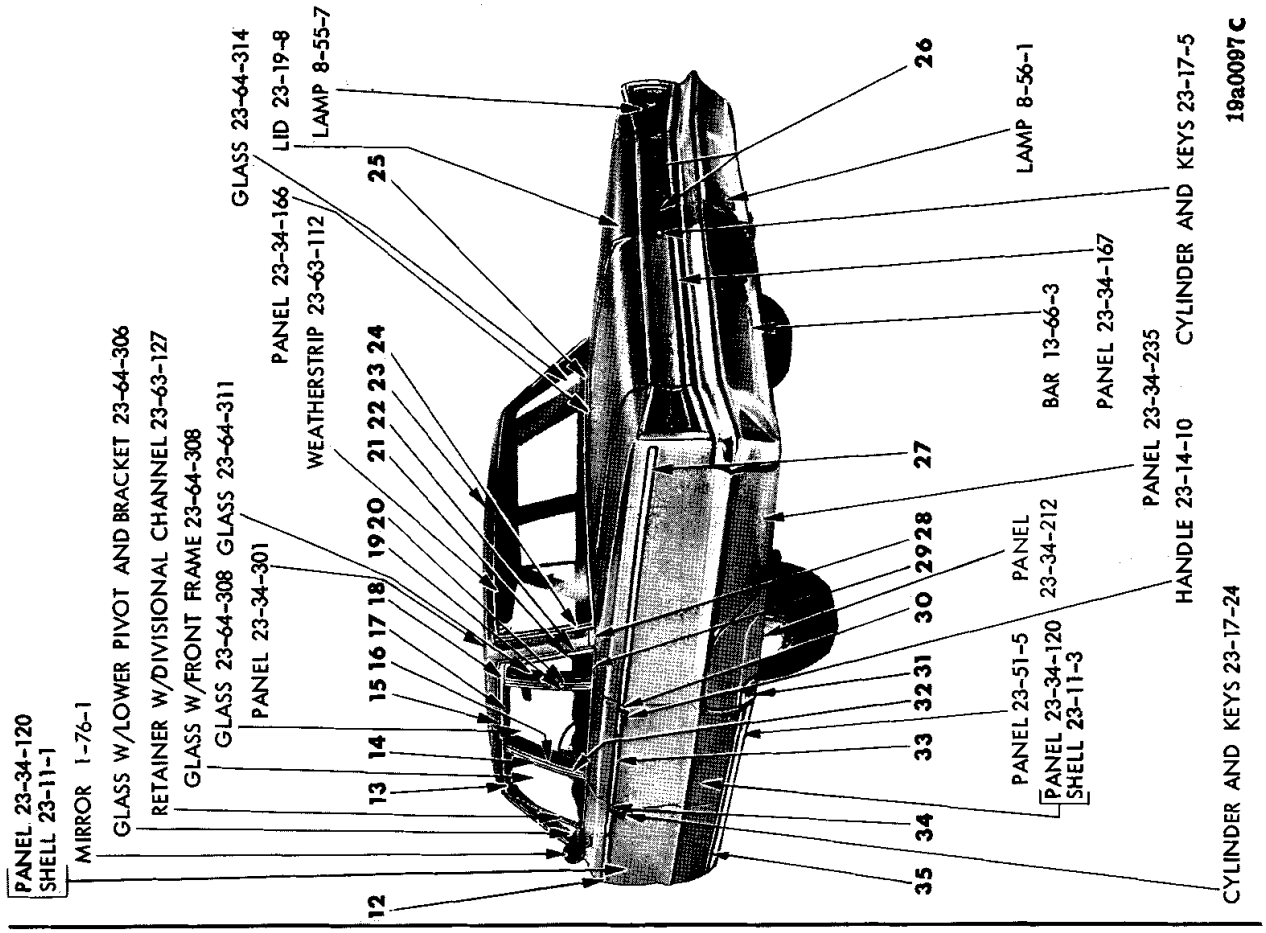

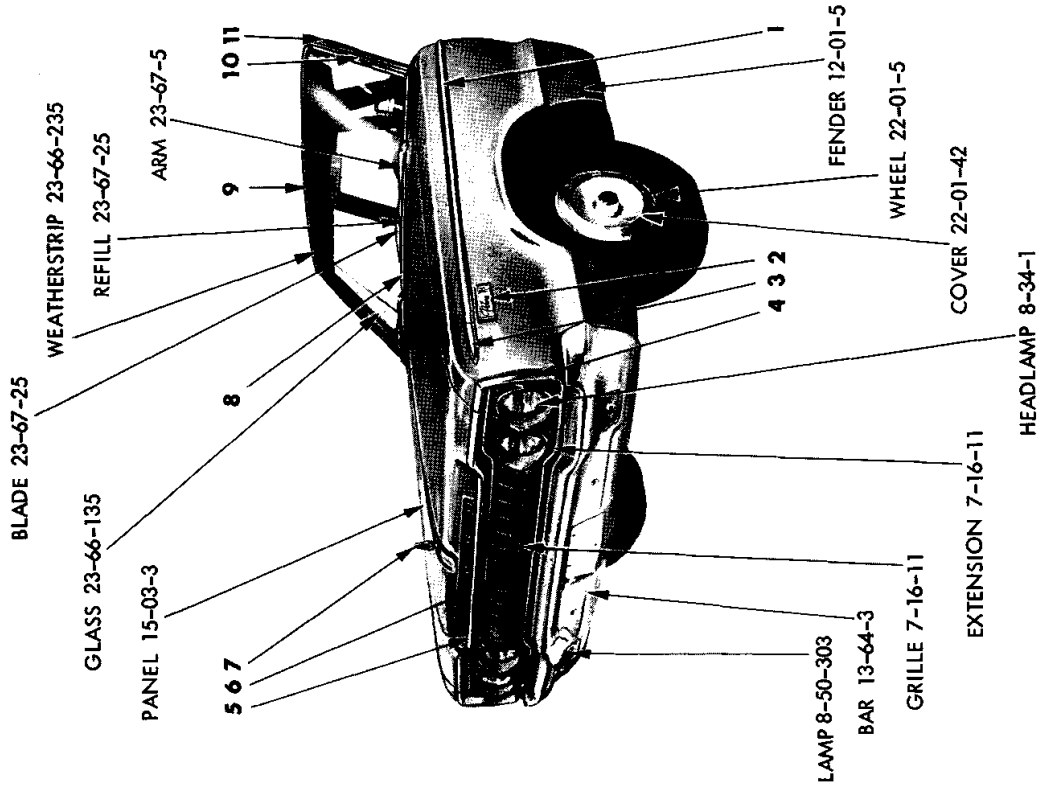

EXTERIOR VIEW - DODGE D-H 4 DOOR SEDAN (6 WINDOW)

MyMopar.com

REF. NO.	QTY	PART NUMBER	DESCRIPTION
1	1	2525 828-9	MOULDING PACKAGE, Fender Side (12-15-2)
	10	6001 740	Retainer and Seal
	4	6001 738	Retainer
	4	116 000	Nut
2	2	2578 548	NAME PLATE and ORNAMENT, Fender Side (12-15-21)
	4	6024 723	Seal
	4	---- ---	Nut
3	2	2525 826	MOULDING PACKAGE, Fender Side Front (12-15-2)
	2	6001 738	Retainer
	2	116 000	Nut
4	1	2525 822-3	MOULDING PACKAGE, Fender Front (12-15-2)
	6	6024 723	Seal
	6	9411 618	Nut
5	1	2525 587	MOULDING PACKAGE, Hood Front (15-25-2)
	8	116 000	Nut
	8	6024 577	Stud
	8	6024 723	Washer
6	2	2417 825	LETTER, Hood Front Name, "D" (15-06-16)
	1	2417 826	"O"
	1	2417 828	"G"
	1	2417 829	"E"
	10	6000 616	Nut
7	1	2524 007	ORNAMENT, Hood Front (15-03-18)
8	1	2584 110-1	MOULDING PACKAGE, Windshield Outside Lower (23-23-65)
	10	6001 697	Retainer
9	1	2584 104	MOULDING PACKAGE, Windshield Outside Upper (23-23-65)
	8	6001 648	Retainer
10	1	2584 108-9	MOULDING PACKAGE, Windshield Outside Side (23-23-65)
	8	6001 648	Retainer
11	1	2529 264-5	MOULDING, Body Front Pillar Drain Trough (23-59-61)
12	1	2584 300-1	MOULDING PACKAGE, Front Door Lower Front (23-23-32)
	8	6001 740	Retainer
13	1	2492 782-3	MOULDING, Front Door Window Frame Upper (23-23-32)
14	1	2492 784-5	MOULDING, Front Door Window Frame Rear (23-23-32)
15	1	2573 944-5	MOULDING, Roof Side Drain Trough Front (23-59-61)
16	1	2492 796-7	MOULDING, Rear Door Window Frame Front (23-23-33)
17	1	2492 798-9	MOULDING, Rear Door Window Frame Upper (23-23-33)
18	1	2584 200-1	MOULDING PACKAGE, Quarter Window Outside Upper (23-23-73)
	6	6024 659	Screw
	2	2527 816	Clip and Seal
19	1	2492 800-1	MOULDING, Rear Door Window Frame Rear (23-23-33)
20	1	2484 558-9	MOULDING, Quarter Window Outside Front (23-23-73)
	6	6023 247	Screw
21	1	2584 202-3	MOULDING and STUD PACKAGE, Quarter Window Outside Rear (23-23-73)
	6	116 000	Nut and Washer
22	1	2573 946-7	MOULDING, Roof Side Drain Trough Rear (23-59-61)
23	1	2584 102-3	MOULDING PACKAGE, Rear Window Outside Upper (23-23-52)
	8	6001 648	Retainer and Screw
24	1	2584 100-1	MOULDING PACKAGE, Rear Window Outside Side (23-23-52)
	6	6001 648	Retainer and Screw
25	1	2584 098	MOULDING PACKAGE, Rear Window Outside Lower (23-23-52)
	8	6001 648	Retainer and Screw
26	1	2528 058	PANEL, Deck Lid Finish (23-23-30)
	6	---- ---	Washer
	6	116 000	Nut
	10	---- ---	Screw
27	1	2584 320-1	MOULDING PACKAGE, Quarter Panel Lower (23-23-39)
	8	6001 740	Retainer
	2	6024 271	Screw
	6	6001 738	Retainer
	6	9417 621	Nut
28	1	2584 192-3	MOULDING PACKAGE, Roof Side Extension Belt (23-23-42)
	2	6001 767	Retainer and Seal
29	1	2584 216-7	MOULDING PACKAGE, Quarter Panel Belt (23-23-39)
	6	6001 496	Retainer
30	1	2584 308-9	MOULDING PACKAGE, Rear Door Lower Rear (23-23-33)
	2	---- ---	Nut
31	1	2584 524-5	DEFLECTOR PACKAGE, Rear Wheel Opening Panel Stone (23-34-240)
	4	273 329	Nut
	4	6024 702	Seal
32	1	2570 110-1	PANEL, Center Pillar Finish (23-23-16)
33	1	2584 318-9	MOULDING PACKAGE, Rear Door Lower Front (23-23-33)
	6	6001 740	Retainer
	2	6001 831	Retainer
	2	446 618	Nut
34	1	2584 304-5	MOULDING PACKAGE, Front Door Lower Rear (23-23-32)
	2	---- ---	Nut
35	1	2584 278-9	MOULDING PACKAGE, Body Side Sill (23-23-2)
	4	6023 682	Screw
	18	6001 750	Retainer

All Packages Include Attaching Parts

Part Type Code is Indicated in Parentheses

EXTERIOR VIEW - DODGE D-H 4 DOOR SEDAN (6 WINDOW)

MyMopar.com

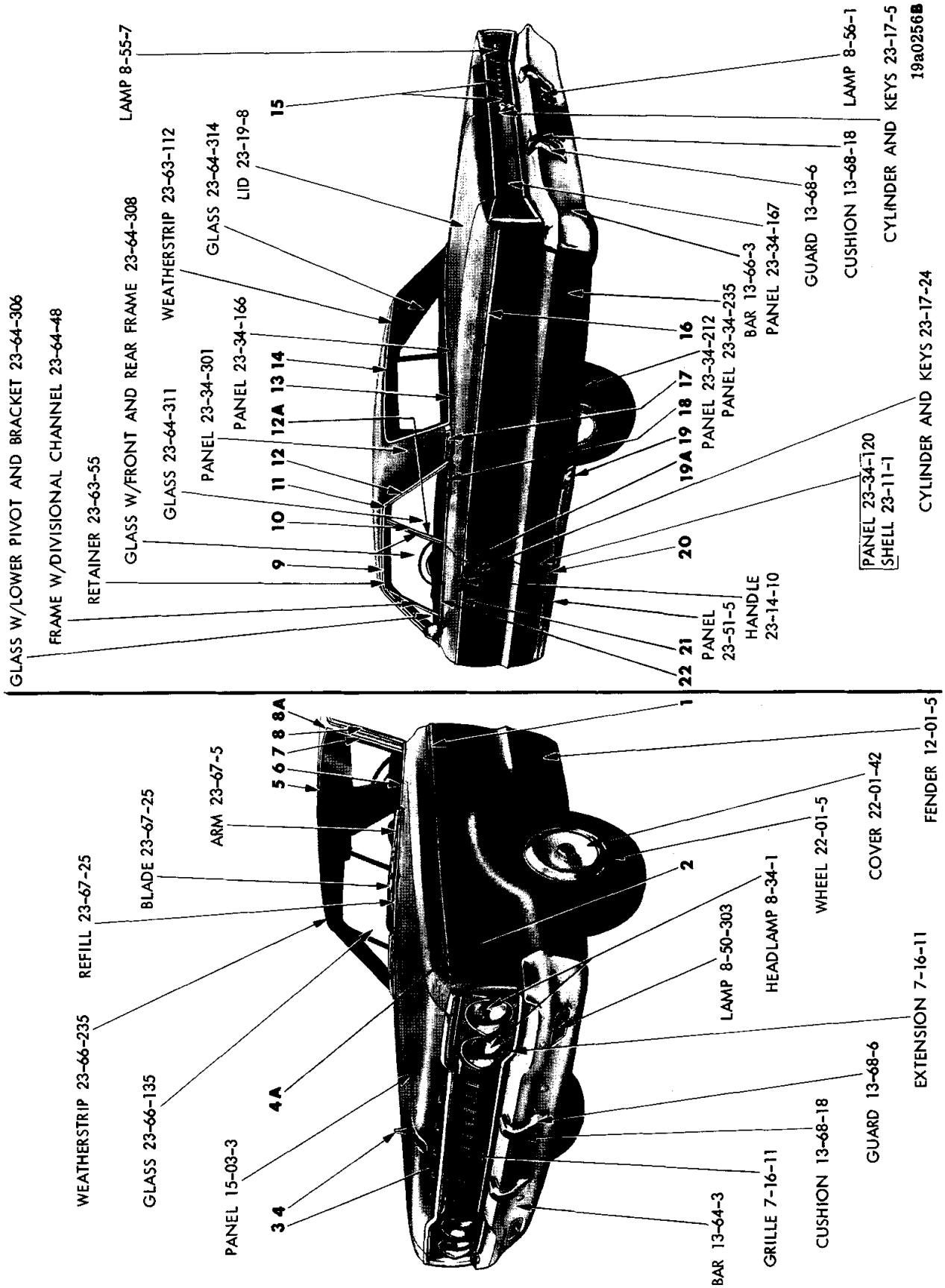

EXTERIOR VIEW - DODGE D-H 2 DOOR HARDTOP

MyMopar.com

REF. NO.	QTY	PART NUMBER	DESCRIPTION
1	1	2525 828-9	MOULDING PACKAGE, Fender Side (12-15-2)
	10	6001 740	Retainer and Seal
	4	6001 738	Retainer and Seal
	4	---- ---	Nut
2	1	2525 822-3	MOULDING PACKAGE, Fender Front (12-15-2)
	6	6024 723	Washer
	6	9411 618	Nut
3	2	2417 825	LETTER, Hood Front Name, "D" (15-06-16)
	1	2417 826	"O"
	1	2417 828	"G"
	1	2417 829	"E"
4	1	2524 007	ORNAMENT, w/Stud, Hood Front, (15-03-18)
4A	2	2525 826	MOULDING PACKAGE, Fender Side Front (12-15-2)
	2	6001 738	Retainer and Seal
	2	---- ---	Nut
5	1	2584 099	MOULDING PACKAGE, Windshield Outside Upper (23-23-65)
	8	6001 648	Retainer
6	1	2584 110-1	MOULDING PACKAGE, Windshield Outside Lower (23-23-65)
	10	6001 697	Retainer
7	1	2584 106-7	MOULDING PACKAGE, Windshield Outside Side (23-23-65)
	8	6001 648	Retainer
8	1	2528 002-3	MOULDING, Body Front Pillar Drain Trough (use w/o Vinyl Roof) (23-59-61)
8A	1	2574 850-1	MOULDING, Front Pillar (use w/Vinyl Roof) (23-23-14)
	2	6023 682	Screw
9	1	2573 230-1	MOULDING, Roof Side Drain Trough, Front and Rear (use w/o Vinyl Roof)(23-59-61)
	1	2526 480-1	MOULDING, Roof Side Drain Trough (use w/Vinyl Roof) (23-59-61) (Note #1)
	1	2605 010-1	MOULDING, Roof Side Drain Trough Front (w/Vinyl Roof) (23-59-61) (Note #2)
10	1	2529 144-5	MOULDING, Quarter Window Glass Front (23-23-73)
11	1	2526 484-5	COVER, Roof Side Drain Trough Moulding Front (use w/Vinyl Roof) (23-59-61)
12	1	2526 482-3	MOULDING, Roof Side Drain Trough Rear (use w/Vinyl Roof)(23-59-61)(Note #1)
	1	2605 012-3	MOULDING, Roof Side Drain Trough Rear (w/Vinyl Roof) (23-59-61) (Note #2)
12A	1	2570 060-1	MOULDING, Rear Door Window Frame Front (23-23-33)
	10	6024 997	Screw
13	1	2525 595	MOULDING PACKAGE, Rear Window Outside Lower (23-23-52) (Note #3)
	7	6001 648	Retainer
	1	2807 140-1	MOULDING PACKAGE, Rear Window Outside Upper and Side (23-23-52) (Note #4)
14	1	2525 596-7	MOULDING PACKAGE, Rear Window Outside Upper and Side (23-23-52) (Note #3)
	14	6001 648	Retainer
	1	2807 138-9	MOULDING PACKAGE, Rear Window Outside Lower (23-23-52) (Note #4)
15	1	2528 058	PANEL, Deck Lid Finish (23-23-30)
	6	---- ---	Washer
	6	116 000	Nut
	10	---- ---	Screw
16	1	2584 316-7	MOULDING PACKAGE, Quarter Outside (23-23-39)
	14	6001 740	Retainer
	2	6024 271	Screw
	6	6001 738	Retainer
	6	9417 621	Nut
17	1	2584 428-9	MOULDING PACKAGE, Roof Outside Belt (23-23-42)
	4	---- ---	Washer
	4	9411 618	Nut
18	1	2584 218-9	MOULDING PACKAGE, Quarter Outside Belt (23-23-39)
19	1	2584 524-5	DEFLECTOR PACKAGE, Rear Wheel Opening Panel Stone (23-34-240)
	4	273 329	Nut
	4	6024 702	Seal
19A	1	2584 306-7	MOULDING PACKAGE, Door Outside Rear (23-23-32)
	2	6001 515	Clip
20	1	2584 278-9	MOULDING PACKAGE, Body Side Sill (23-23-2)
	4	6023 682	Screw
	18	6001 750	Retainer
21	1	2584 298-9	MOULDING PACKAGE, Door Outside Front (23-23-32)
	8	6001 740	Retainer
	2	6001 831	Retainer
	2	9417 621	Nut
22	1	2584 214-5	MOULDING PACKAGE, Door Outside Belt (23-23-32)
	16	6001 496	Retainer
	2	---- ---	Retainer

NOTE 1: USE W/VINYL RETAINER
NOTE 2: USE W/O VINYL RETAINER
NOTE 3: UP TO SERIAL NO. 195358
NOTE 4: AFTER SERIAL NO. 195358

All Packages Include Attaching Parts

Part Type Code is Indicated in Parentheses

EXTERIOR VIEW - DODGE D-H 2 DOOR HARDTOP

MyMopar.com

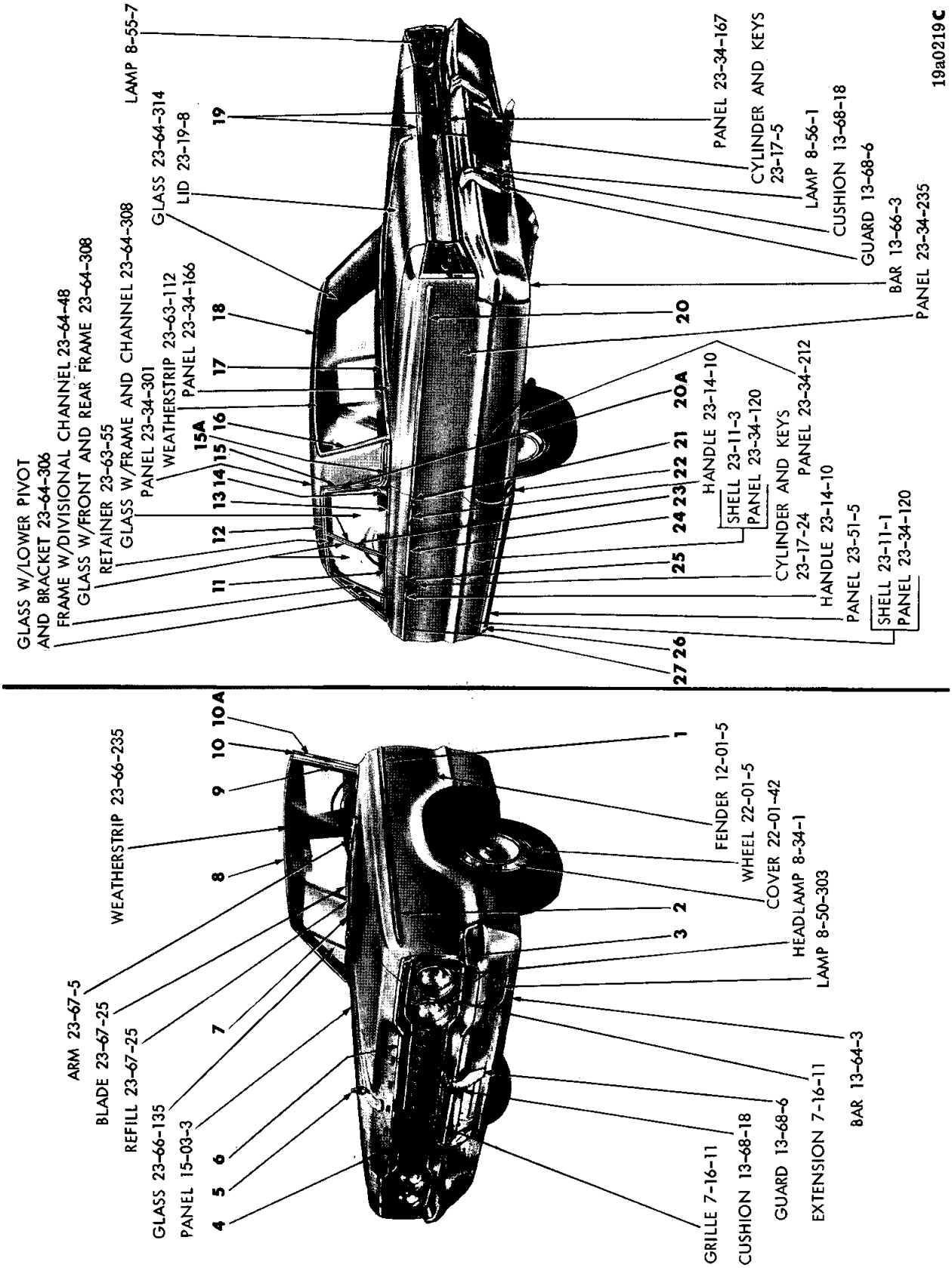

EXTERIOR VIEW - DODGE D-H 4 DOOR HARDTOP

MyMopar.com

REF. NO.	QTY	PART NUMBER	DESCRIPTION
1	1	2525 828-9	MOULDING PACKAGE, Fender Side (12-15-2)
	10	6001 740	Retainer
	4	6001 738	Retainer
	4	---- ---	Nut
2	2	2525 826	MOULDING PACKAGE, Fender Side Front (12-15-2)
	2	6001 738	Retainer
	2	---- ---	Nut
3	1	2525 822-3	MOULDING PACKAGE, Fender Front (12-15-2)
	6	6024 723	Washer
	6	9411 618	Nut
4	2	2417 825	LETTER, Hood Front Name, "D" (15-06-16)
	1	2417 826	"O"
	1	2417 828	"G"
	1	2417 829	"E"
	16	6000 616	Nut
5	1	2524 007	ORNAMENT, Hood Front (15-03-18)
6	1	2525 587	MOULDING PACKAGE, Hood Front (15-25-2)
	8	116 000	Nut
	8	6024 577	Stud
	8	6024 723	Washer
7	1	2584 110-1	MOULDING PACKAGE, Windshield Outside Lower (23-23-65)
	10	6001 697	Retainer
8	1	2584 099	MOULDING PACKAGE, Windshield Outside Upper (23-23-65)
	8	6001 648	Retainer
9	1	2584 106-7	MOULDING PACKAGE, Windshield Outside Side (23-23-65)
	8	6001 648	Retainer
10	1	2574 850-1	MOULDING, Front Pillar, use w/Vinyl Roof (23-23-14)
	2	6023 682	Screw
10A	1	2528 002-3	MOULDING, Body Front Pillar Drain Trough, w/o Vinyl Roof (Lgh. approx. 22") (23-59-61)
	1	2807 364-5	MOULDING PACKAGE, Body Front Pillar Drain Trough, w/o Vinyl Roof (Lgh. approx. 27") (23-59-61)
	4	6023 370	Screw
	1	2605 436-7	MOULDING, Body Front Pillar Drain Trough, w/Vinyl (23-59-61)
11	1	2584 212-3	MOULDING PACKAGE, Front Door Outside Belt (23-23-32)
	16	6001 496	Retainer
12	1	2526 468-9	MOULDING, Roof Side Drain Trough, w/o Vinyl Roof (Lgh. approx. 45")(23-59-61)
	1	2807 366-7	MOULDING PACKAGE, Roof Side Drain Trough, w/o Vinyl Roof (Lgh. approx. 40")(23-59-61)
	2	6023 370	Screw
	1	2605 438-9	MOULDING, Roof Side Drain Trough, w/Vinyl Roof (23-59-61)
13	1	2584 248-9	MOULDING PACKAGE, Rear Door Outside Belt (23-23-33)
	10	6001 496	Retainer
14	1	2571 180-1	ORNAMENT and WEATHERSTRIP, Rear Door Rear Outer (23-11-23) (23-63-33)
	4	6025 425	Screw 2 9416 628 Screw
15	1	2584 426-7	MOULDING PACKAGE, Roof Side Extension Belt, w/o Vinyl Roof (23-23-41)
	10	---- ---	Washer 10 9411 618 Nut
	1	2605 440-1	MOULDING, Roof Side Drain Trough Rear, w/Vinyl Roof (23-59-61)
15A	1	2584 424-5	MOULDING PACKAGE, Roof Side Extension Belt, w/Vinyl Roof (23-23-42)
	6	---- ---	Washer 6 ---- --- Nut
16	1	2525 592-3	MOULDING PACKAGE, Rear Window Outside Side (23-23-52)
	6	6001 648	Retainer and Screw
17	1	2525 594	MOULDING PACKAGE, Rear Window Outside Lower (23-23-52)
	8	6001 648	Retainer and Screw
18	1	2525 598-9	MOULDING PACKAGE, Rear Window Outside Upper (23-23-52)
	8	6001 648	Retainer and Screw
19	1	2528 058	PANEL and STUDS, Deck Lid Finish (23-23-30)
	10	---- ---	Screw
	6	---- ---	Washer 6 116 000 Nut
20	1	2584 320-1	MOULDING PACKAGE, Quarter Outside (23-23-39)
	8	6001 740	Retainer 2 6024 271 Screw
	6	6001 738	Retainer 6 9417 621 Nut
20A	1	2573 546-7	COVER, Roof Side Drain Trough Rear, w/Vinyl Roof (23-59-57)
21	1	2584 308-9	MOULDING PACKAGE, Rear Door Outside Rear (23-23-33)
	2	---- ---	Nut
22	1	2584 524-5	DEFLECTOR PACKAGE, Rear Wheel Opening Panel Stone (23-34-240)
	4	6024 702	Seal 4 273 329 Nut
23	1	2664 678-9	MOULDING w/Weatherstrip Retainer, Rear Door Window Frame Front (23-23-33) (23-63-105)
	10	6024 997	Screw
24	1	2584 318-9	MOULDING PACKAGE, Rear Door Outside Front (23-23-33)
	6	6001 740	Retainer
	2	6001 831	Retainer 2 446 618 Nut
25	1	2584 304-5	MOULDING PACKAGE, Front Door Outside Rear (23-23-32)
	2	---- ---	Nut
26	1	2584 278-9	MOULDING PACKAGE, Body Side Sill (23-23-2)
	18	6001 750	Retainer 4 6023 282 Screw
27	1	2584 300-1	MOULDING PACKAGE, Front Door Outside Front (23-23-32)
	8	6001 740	Retainer

All Packages Include Attaching Parts

Part Type Code is Indicated in Parentheses

EXTERIOR VIEW - DODGE D-H 4 DOOR HARDTOP

MyMopar.com

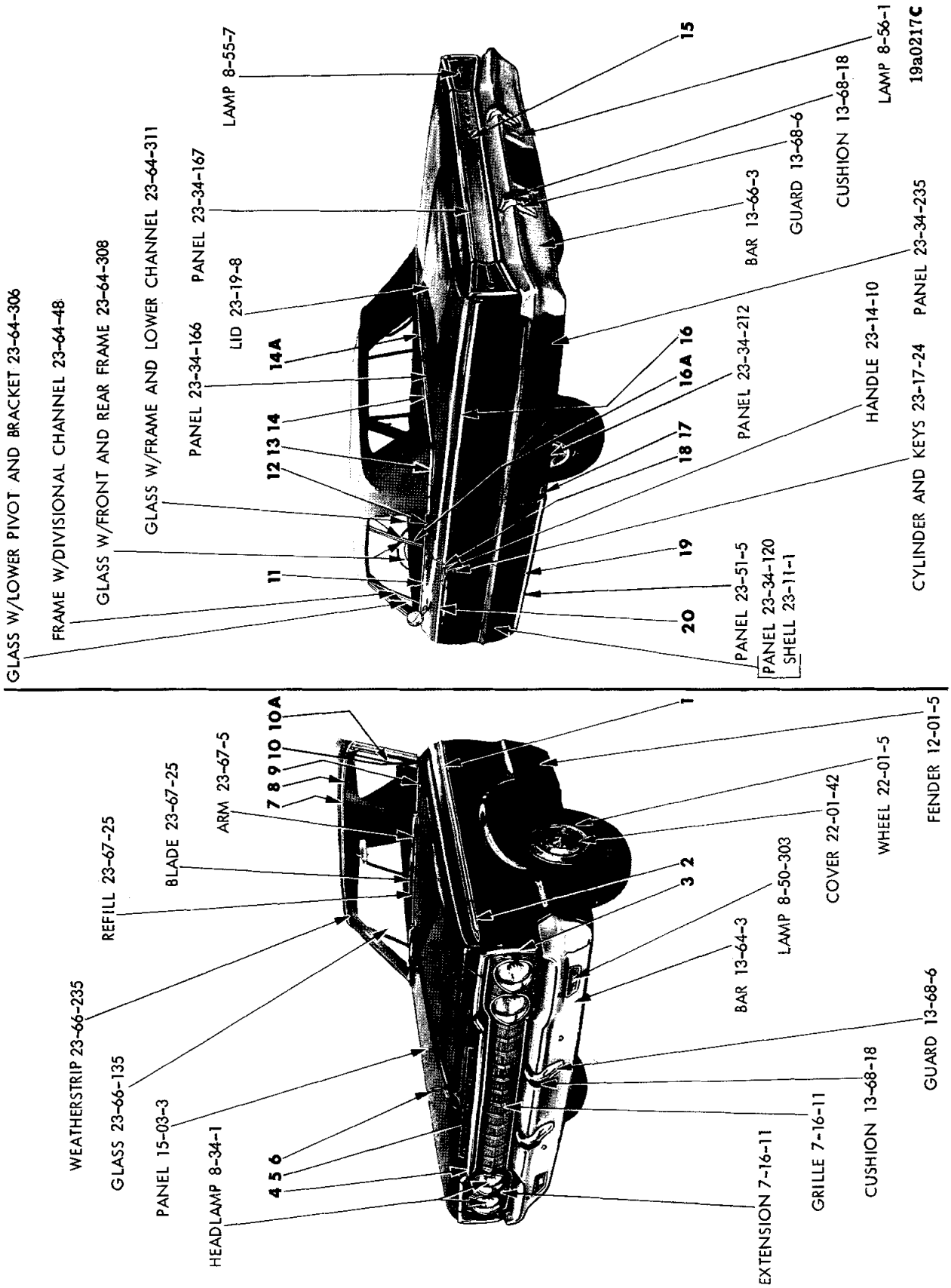

EXTERIOR VIEW - DODGE D-H CONVERTIBLE COUPE

MyMopar.com

REF. NO.	QTY	PART NUMBER	DESCRIPTION
1	1	2525 828-9	MOULDING PACKAGE, Fender Side (12-15-2)
	10	6001 740	Retainer
	4	6001 738	Retainer
	4	---- ---	Nut
2	2	2525 826	MOULDING PACKAGE, Fender Side Front (12-15-2)
	2	6001 738	Retainer
	2	---- ---	Nut
3	1	2525 822-3	MOULDING PACKAGE, Fender Front (12-15-2)
	6	6024 723	Washer
	6	9411 618	Nut
4	1	2525 587	MOULDING PACKAGE, Hood Front (15-25-2)
	8	116 000	Nut
	8	6024 577	Stud
	8	6024 723	Washer
5	2	2417 825	LETTER, Hood Front Name, "D" (15-06-16)
	1	2417 826	"O"
	1	2417 828	"G"
	1	2417 829	"E"
6	1	2524 007	ORNAMENT, Hood Top (15-03-18)
7	1	2484 602-3	MOULDING, Windshield Outside Upper Header (23-23-65)
	5	6025 132	Screw
8	1	2584 099	MOULDING PACKAGE, Windshield Outside Upper (23-23-65)
	8	6001 648	Retainer
9	1	2584 110-1	MOULDING PACKAGE, Windshield Outside Lower (23-23-65)
	10	6001 697	Retainer
10	1	2481 844-5	MOULDING, Body Front Upper Pillar Outside (23-23-14)
	8	9415 214	Screw
	1	2528 660-1	EXTENSION, Body Front Pillar Outside Moulding Lower (23-23-14)
10A	1	2584 106-7	MOULDING PACKAGE, Windshield Outside Side (23-23-65)
	8	6001 648	Retainer
11	1	2584 214-5	MOULDING PACKAGE, Door Outside Belt (23-23-32)
	16	6001 496	Retainer
12	1	2584 220-1	MOULDING PACKAGE, Quarter Outside Belt (23-23-39)
	6	6001 496	Retainer
13	1	2584 084-5	MOULDING PACKAGE, Quarter Outside Belt Rear (23-23-39)
	2	2094 380	Retainer
	2	---- ---	Screw
14	1	2584 082-3	MOULDING PACKAGE, Deck Opening Upper Panel (23-23-31)
	20	2094 380	Fastener
14A	1	2584 081	CAP PACKAGE, Deck Opening Upper Panel Moulding (23-23-41)
	1	2094 380	Fastener
15	1	2528 058	PANEL and STUDS, Deck Lid Finish (23-23-30)
	6	---- ---	Washer
	6	116 000	Nut
	10	---- ---	Screw
16	1	2584 316-7	MOULDING PACKAGE, Quarter Outside (23-23-39)
	14	6001 740	Retainer
	2	6024 271	Screw
	6	6001 738	Retainer
	6	9417 621	Nut
16A	1	2529 096-7	MOULDING, Quarter Window Glass Front (23-23-73)
17	1	2584 524-5	DEFLECTOR PACKAGE, Rear Wheel Opening Panel Stone (23-34-240)
	4	273 329	Nut
	4	6024 702	Seal
18	1	2584 306-7	MOULDING PACKAGE, Door Outside Rear (23-23-32)
	2	6001 515	Clip
19	1	2584 278-9	MOULDING PACKAGE, Body Side Sill (23-23-2)
	4	6023 682	Screw
	18	6001 750	Retainer
20	1	2584 298-9	MOULDING PACKAGE, Door Outside Front (23-23-32)
	10	6001 740	Retainer

All Packages Include Attaching Parts

Part Type Code is Indicated in Parentheses

EXTERIOR VIEW - DODGE D-H CONVERTIBLE COUPE

MyMopar.com

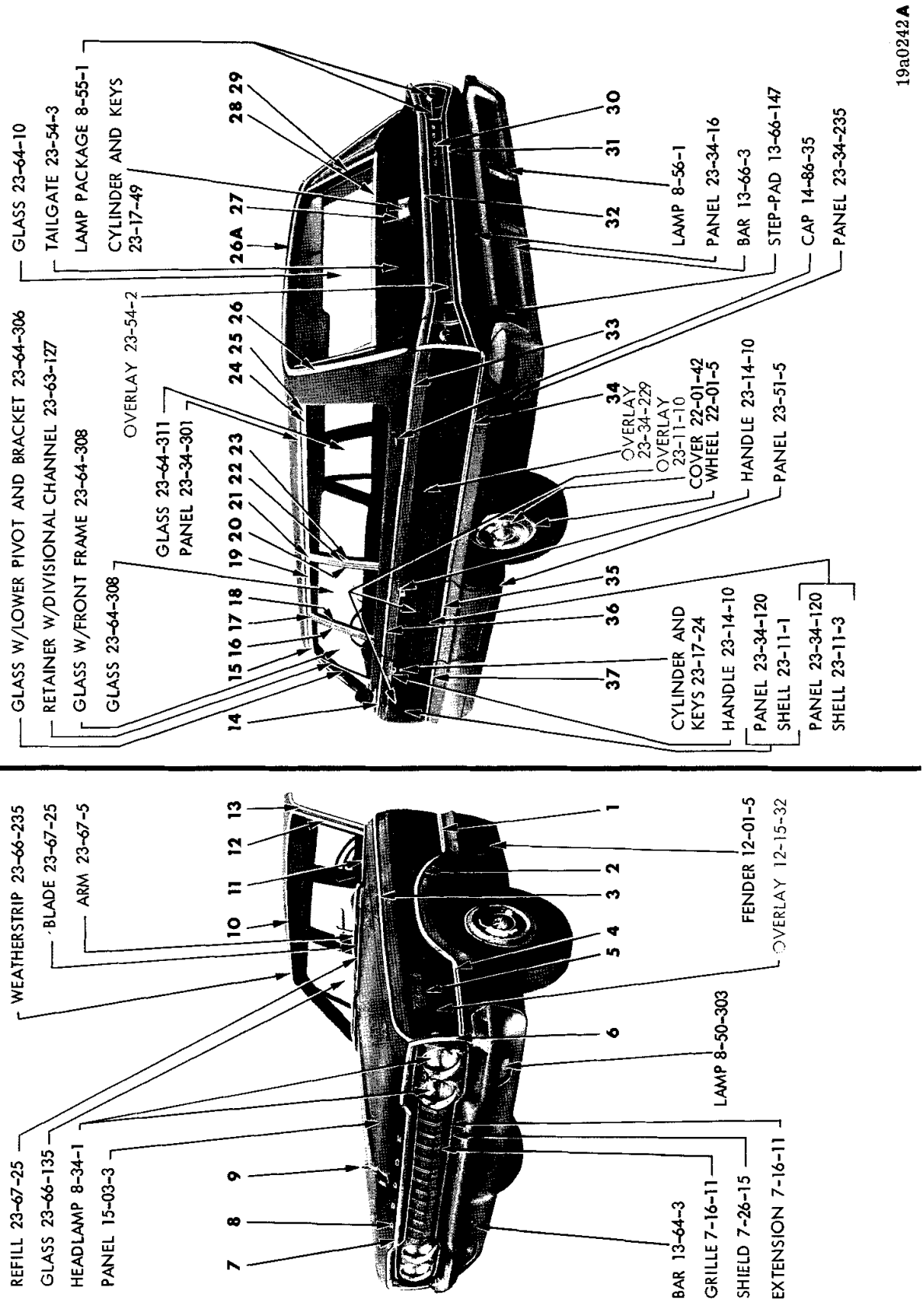

EXTERIOR VIEW - DODGE D-H STATION WAGON

MyMopar.com

REF. NO.	QTY	PART NUMBER	DESCRIPTION
1	1	2525 834-5	MOULDING PACKAGE, Fender Side Lower Rear (12-15-2)
	4	6001 641	Retainer
	2	6001 660	Retainer 2 ---- --- Nut
2	1	2525 832-3	MOULDING PACKAGE, Fender Side Lower Intermediate (12-15-2)
	8	6001 660	Retainer 8 ---- --- Nut
3	1	2525 836-7	MOULDING PACKAGE, Fender Side Upper (12-15-2)
	12	6001 641	Retainer
	6	6001 660	Retainer 6 ---- --- Nut
4	1	2525 830-1	MOULDING PACKAGE, Fender Side Lower Front (12-15-2)
	6	6001 660	Retainer 6 ---- --- Nut
5	2	2578 548	NAME PLATE, Fender Side, Polara 880 (12-15-21)
	4	6024 723	Washer 4 ---- --- Nut
6	1	2525 822-3	MOULDING PACKAGE, Fender Front (12-15-2)
	6	6024 723	Washer 6 1839 995 Nut
7	1	2525 587	MOULDING PACKAGE, Hood Front (15-25-2)
	1	6024 577	Stud
	1	6024 723	Washer 1 116 000 Nut
8	2	2417 825	LETTER, Hood Front Name, "D" (15-06-16)
	1	2417 826	"O"
	1	2417 828	"G"
	1	2417 829	"E"
	10	6000 616	Nut
9	1	2524 007	ORNAMENT, Hood Front (15-03-18)
10	1	2584 104	MOULDING PACKAGE, Windshield Outside Upper (23-23-65)
	8	6001 648	Retainer
11	1	2584 110-1	MOULDING PACKAGE, Windshield Outside Lower (23-23-65)
	10	6001 697	Retainer
12	1	2584 108-9	MOULDING, Windshield Outside Side (23-23-65)
	8	6001 648	Retainer
13	1	2529 264-5	MOULDING, Body Front Pillar Drain Trough (23-59-61)
14	1	2584 302-3	MOULDING PACKAGE, Front Door Outside Upper (23-23-32)
	4	6001 677	Retainer
	10	6001 641	Clip 4 446 618 Nut
15	1	2492 782-3	MOULDING, Front Door Window Opening Frame Upper (23-23-32)
16	1	2492 784-5	MOULDING, Front Door Window Opening Frame Rear (23-23-32)
17	1	2570 110-1	PANEL, Body Center Pillar Outside Finish Upper (23-23-16)
	4	6023 247	Screw
18	1	2492 796-7	MOULDING, Rear Door Window Opening Frame Front (23-23-33)
19	1	2492 806-7	MOULDING, Rear Door Window Opening Frame Upper (23-23-33)
20	1	2492 808-9	MOULDING, Rear Door Window Opening Frame Rear (23-23-33)
21	1	2526 148-9	MOULDING, Roof Side Drain Trough Rear (23-59-61)
22	1	2528 562-3	MOULDING, Quarter Window Outside Front (23-23-73)
	8	6023 247	Screw

All Packages Include Attaching Parts

REF. NO.	QTY	PART NUMBER	DESCRIPTION
23	1	2528 562-3	MOULDING, Qtr. Wdo. Outside Frt., Stainless Steel (23-23-73)
24	1	2584 450-1	MOULDING PACKAGE, Quarter Window Outside Upper Primed (23-23-73)
	12	6001 837	Retainer
	2	2529 938	Seal 12 6025 001 Nut
25	1	2528 584-5	COVER PACKAGE, Qtr. Wdo. Outside Upr. Mldg., Stainless Steel (23-23-73)
	12	116 000	Nut
26	1	2586 278-9	MOULDING PACKAGE, Rear Upper Pillar Outside (23-23-60)
	6	---- ---	Clip
26A	1	2584 421	MOULDING PACKAGE, Roof Outside Rear (23-23-42)
	8	6001 816	Clip
	1	2586 106	MOULDING PACKAGE, Roof Outside Rear (used w/Outside Assist Handle) (23-23-42)
	8	6001 816	Clip
27	1	2486 686	ORNAMENT, Tailgate Electric Window Regulator Outside (23-54-11)
	3	---- ---	Stud
28	1	2528 795	MOULDING, Tailgate Outside Belt (23-23-61)
29	1	2584 444-5	MOULDING PACKAGE, Rear Upper Pillar Tailgate Opening (23-23-60)
	6	6001 620	Clip
30	2	2528 648	LETTER "D", Tailgate Name (23-54-11)
	1	2528 649	"O"
	1	2528 651	"G"
	1	2528 652	"E"
	10	152 259	Nut
31	1	2584 097	MOULDING PACKAGE, Tailgate Outside Lower (23-23-61)
	6	6001 729	Retainer
	6	116 000	Nut
32	1	2584 097	MOULDING PACKAGE, Tailgate Outside Upper (23-23-61)
	6	6001 729	Retainer
	6	116 000	Nut
33	1	2584 292-3	MOULDING PACKAGE, Quarter Outside Upper (23-23-39)
	18	6001 641	Clip
34	1	2584 294-5	MOULDING PACKAGE, Quarter Outside Lower (23-23-39)
	18	6001 641	Clip
35	1	2584 312-3	MOULDING PACKAGE, Rear Door Outside Lower (23-23-33)
	8	6001 677	Retainer
	16	6001 641	Clip
	8	9417 621	Nut
36	1	2584 314-5	MOULDING PACKAGE, Rear Door Outside Upper (23-23-33)
	4	6001 677	Retainer
	20	6001 641	Clip
	4	446 618	Nut
37	1	2584 310-1	MOULDING PACKAGE, Front Door Outside Lower (23-23-32)
	8	6001 677	Retainer
	16	6001 641	Clip
	8	9417 621	Nut

Part Type Code is Indicated in Parentheses

EXTERIOR VIEW - DODGE D-H STATION WAGON

MyMopar.com

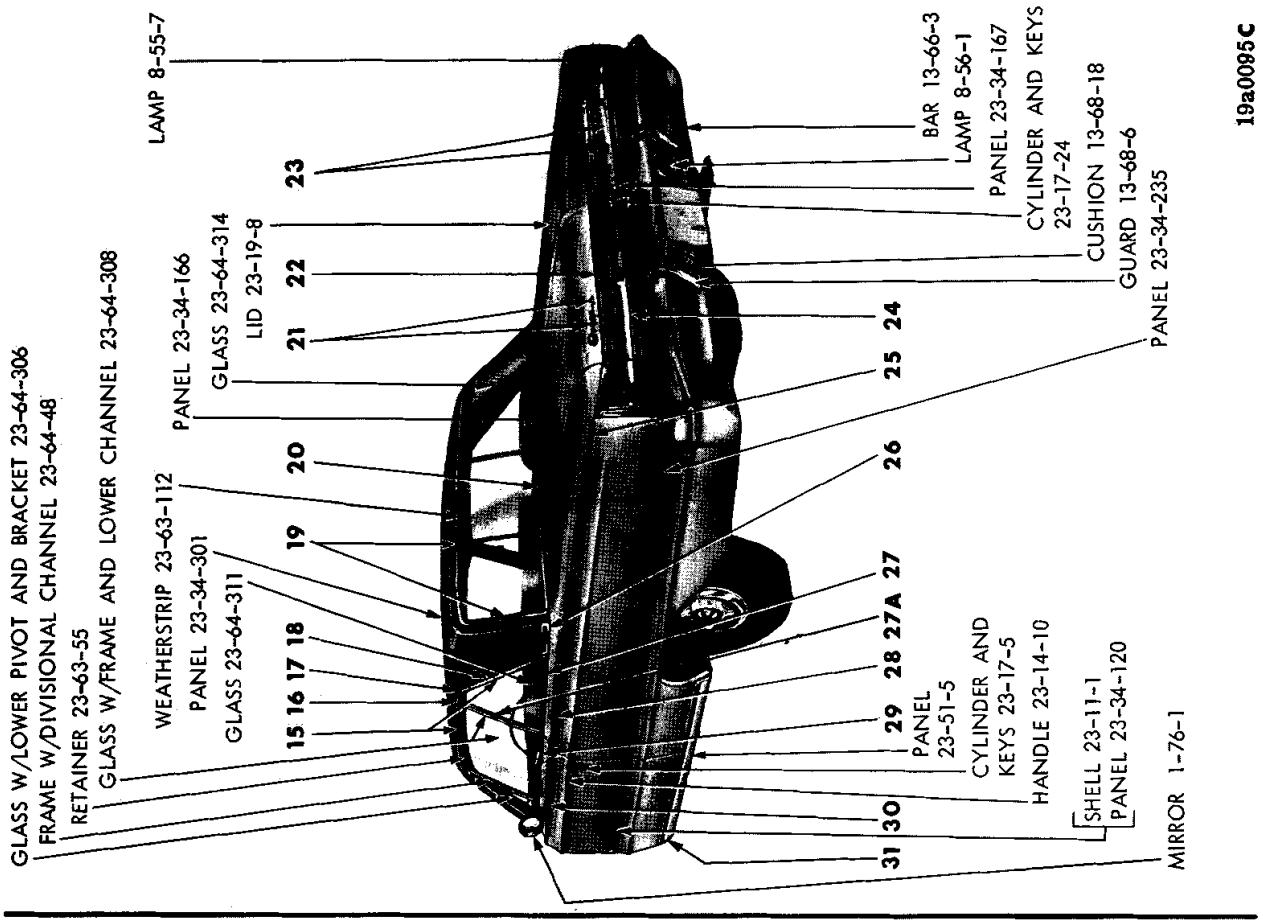

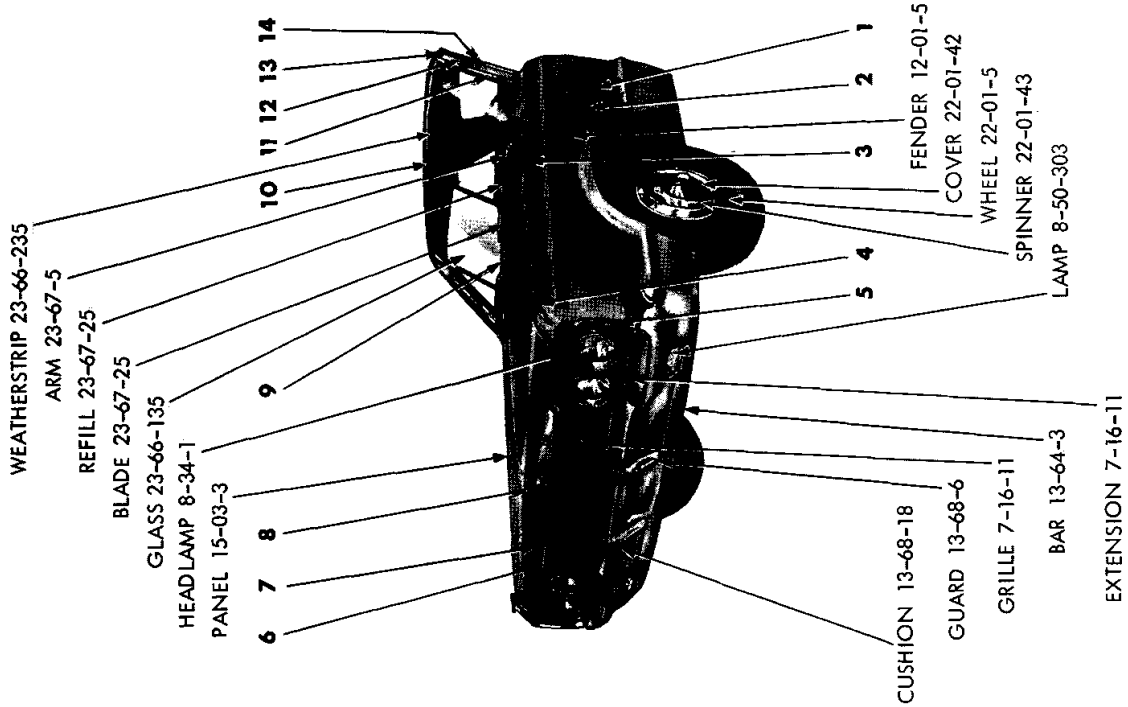

EXTERIOR VIEW - DODGE D-P 2 DOOR HARDTOP

MyMopar.com

REF. NO.	QTY	PART NUMBER	DESCRIPTION
1	2	2524 723	NAME PLATE, Fender Side (Monaco) (12-15-21)
	10	6000 050	Clip
2	2	2524 241	ORNAMENT, Fender Side (12-15-21)
	4	6000 050	Clip
3	1	2525 824-5	MOULDING PACKAGE, Fender Peak (12-15-2)
	12	6024 723	Seal
	12	180 078	Nut
	4	6001 748	Retainer
4	1	2584 959-60	LAMP (8-50-175)
5	1	2525 822-3	MOULDING PACKAGE, Fender Front (12-15-2)
	6	6024 723	Seal
	6	9411 618	Nut
6	1	2525 587	MOULDING PACKAGE, Hood Front (15-25-2)
	8	116 000	Nut
	8	6024 723	Washer
7	2	2417 825	LETTER, Hood Front Name, "D" (15-06-16)
	1	2417 826	"O"
	1	2417 828	"G"
	1	2417 829	"E"
	10	6000 616	Nut
8	1	2524 237	ORNAMENT, Hood Front (15-03-18)
	1	6024 576	Stud
9	1	2584 110-1	MOULDING PACKAGE, Windshield Outside Lower (23-23-65)
	10	6001 697	Retainer
10	1	2584 099	MOULDING PACKAGE, Windshield Outside Upper (23-23-65)
	8	6001 648	Retainer
11	1	2584 106-7	MOULDING PACKAGE, Windshield Outside Side (23-23-65)
	8	6001 648	Retainer
12	1	2574 850-1	MOULDING, Body Front Pillar Trim, use w/Vinyl Roof (23-23-14)
13	1	2574 850-1	MOULDING, Front Pillar Upper (23-23-14)
	2	6023 682	Screw
14	1	2528 002-3	MOULDING, Body Front Pillar Drain Trough, use w/o Vinyl Roof (23-59-61)
15	1	2573 230-1	MOULDING, w/Tie Plate, Roof Side Drain Trough, Front and Rear, use w/o Vinyl Roof (23-59-61)
16	1	2526 480-1	MOULDING, Roof Side Drain Trough Front, use w/Vinyl Roof (23-59-61) (Note #1)
	1	2605 010-1	MOULDING, Roof Side Drain Trough Front (w/Vinyl Roof) (23-59-61) (Note #2)
17	1	2526 484-5	COVER, Roof Side Drain Trough Moulding Front, use w/Vinyl Roof (23-59-57)
18	1	2526 482-3	MOULDING, Roof Side Drain Trough Rear (23-59-61) (Note #1)
	1	2605 012-3	MOULDING, Roof Side Drain Trough Rear (w/Vinyl Roof) (23-57-61) (Note #2)
19	1	2525 596-7	MOULDING PACKAGE, Rear Window Outside Upper & Side (23-23-52) (Note #3)
	14	6001 648	Retainer and Seal
	1	2807 140-1	MOULDING PACKAGE, Rear Window Outside Upper & Side (23-23-52) (Note #4)
20	1	2525 595	MOULDING PACKAGE, Rear Window Outside Lower (23-23-52) (Note #3)
	7	6001 648	Retainer
	1	2807 138-9	MOULDING PACKAGE, Rear Window Outside Lower (23-23-52) (Note #4)
21	1	2528 607	NAME PLATE, Deck Lid (23-19-114)
	4	152 259	Nut
22	1	2526 057	PANEL, Deck Lid Lower Finish (23-23-30)
	8	---- ---	Screw 2 9417 621 Nut
	6	---- ---	Washer 6 152 272 Nut
23	1	2526 056	NAME PLATE, Deck (23-19-114)
	5	6022 007	Washer 5 6006 263 Nut
24	1	2526 058-9	INSERT, Deck Lid Finish Panel, Upper (23-23-30)
	1	2528 682-3	Lower
	2	2528 605	SPACER, Deck Lid Finish Panel to Insert (23-23-11)
25	1	2584 290-1	MOULDING PACKAGE, Quarter Panel Lower Rear (23-23-39)
	8	6001 748	Retainer
	2	6024 723	Washer 2 9417 621 Nut
26	1	2584 428-9	MOULDING PACKAGE, Roof Outside Belt (23-23-42)
	4	---- ---	Washer 4 9411 618 Nut
	1	2584 430-1	MOULDING PACKAGE, Roof Outside Belt (used w/Vinyl Roof) (23-23-42)
	4	---- ---	Washer 4 9411 618 Nut
27	1	2584 218-9	MOULDING PACKAGE, Quarter Panel Belt (23-23-39)
	12	6001 496	Retainer
27A	1	2529 144-5	MOULDING, Quarter Window Glass Front (23-23-73)
28	1	2584 198-9	MOULDING PACKAGE, Quarter Panel Lower Front (23-23-39)
	16	6001 748	Retainer
	12	6024 723	Washer 12 9417 621 Nut
29	1	2584 214-5	MOULDING PACKAGE, Door Belt (23-23-32)
	16	6001 496	Retainer
30	1	2528 402-3	MOULDING, Front Door Lower (23-23-32)
	12	6001 748	Retainer 2 ---- --- Nut
31	1	2573 002-3	MOULDING, Body Side Sill (23-23-2)
	36	6024 651	Screw

NOTE 1: USE W/VINYL RETAINER
NOTE 2: USE W/O VINYL RETAINER
NOTE 3: UP TO SERIAL NO. 195358
NOTE 4: AFTER SERIAL NO. 195358

All Packages Include Attaching Parts

Part Type Code is Indicated in Parentheses

EXTERIOR VIEW - DODGE D-P 2 DOOR HARDTOP

MyMopar.com

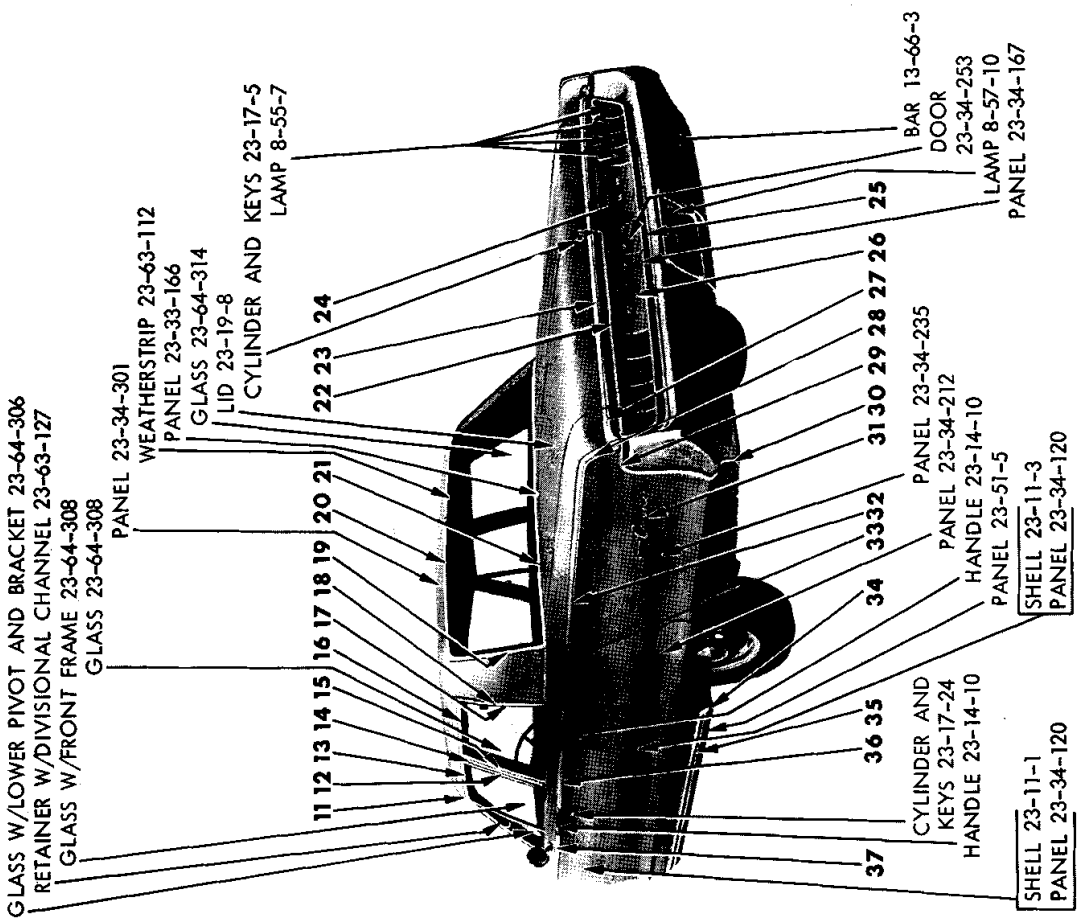

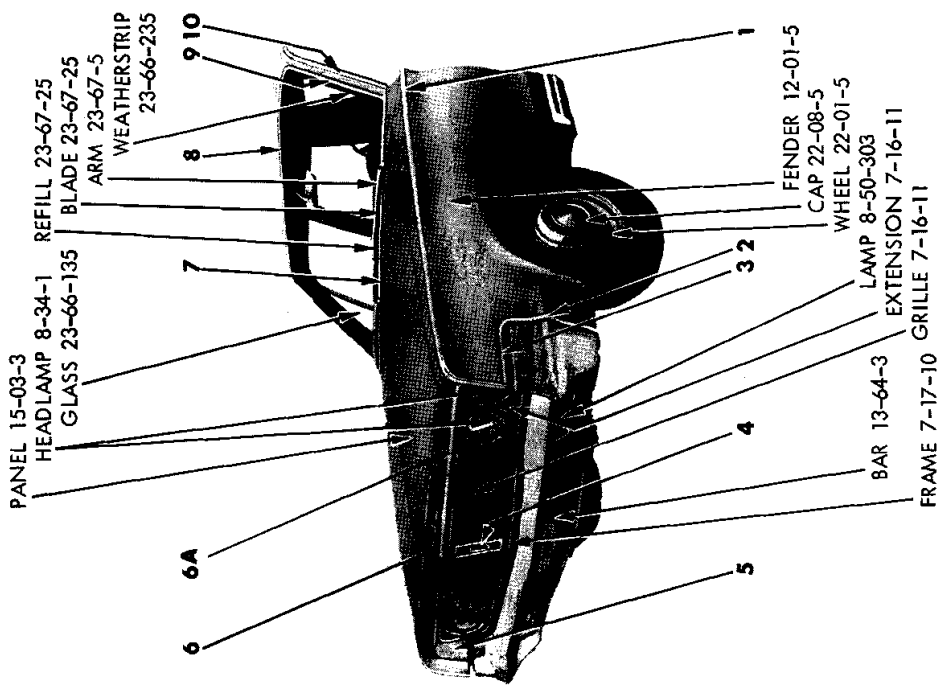

EXTERIOR VIEW - CHRYSLER C-L 4 DOOR SEDAN

MyMopar.com

REF. NO.	QTY	PART NUMBER	DESCRIPTION
1	1	2584 122-3	MOULDING PACKAGE, Fender Peak (12-15-2)
	8	6001 667	Clip
	6	6001 753	Retainer 6 6025 140 Nut
2	1	2584 116-7	MOULDING PACKAGE, Front Bumper Fender (12-15-2)
	6	---- ---	Nut
3	1	2584 124-5	MOULDING PACKAGE, Fender Front Extension (12-15-2)
	4	6024 349	Screw
	4	6023 164	Nut
4	1	2524 265	MEDALLION, Radiator Grille (7-17-1)
5	1	2584 112-3	MOULDING PACKAGE, Fender Front (12-15-2)
	4	---- ---	Nut 2 6025 148 Screw
6	1	2524 270	LETTER, Hood Front Name, "C" (15-06-16)
	1	2524 271	"H"
	2	2524 272	"R"
	1	2524 273	"Y"
	1	2524 274	"S"
	1	2524 275	"L"
	1	2524 276	"E" 8 1839 995 Nut
6A	1	2524 258	MOULDING, Hood Front (15-25-2)
7	1	2584 110-1	MOULDING PACKAGE, Windshield Outside Lower (23-23-65)
	10	6001 697	Retainer
8	1	2584 104	MOULDING PACKAGE, Windshield Outside Upper (23-23-65)
	8	6001 648	Retainer
9	1	2584 108-9	MOULDING PACKAGE, Windshield Outside Side (23-23-65)
	8	6001 648	Retainer
10	1	2529 264-5	MOULDING, Body Front Pillar Drain Trough (23-59-61)
11	1	2492 782-3	MOULDING, Front Door Window Opening Frame Upper (23-23-32)
12	1	2492 784-5	MOULDING, Front Door Window Opening Frame Rear (23-23-32)
13	1	2526 462-3	MOULDING, Roof Side Drain Trough (23-59-61)
14	1	2570 110-1	PANEL, Body Center Pillar Outside Finish Upper (23-23-16)
	4	6023 247	Screw
15	1	2492 796-7	MOULDING, Rear Door Window Opening Frame Front (23-23-33)
16	1	2492 798-9	MOULDING, Rear Door Window Opening Frame Upper (23-23-33)
17	1	2492 800-1	MOULDING, Rear Door Window Opening Frame Rear (23-23-33)
18	1	2526 464-5	MOULDING, Roof Side Drain Trough Rear (23-59-61)
19	1	2584 100-1	MOULDING PACKAGE, Rear Window Outside Side (23-23-52)
	6	6001 648	Retainer and Screw
20	1	2584 102-3	MOULDING PACKAGE, Rear Window Outside Upper (23-23-52)
	8	6001 648	Retainer and Screw
21	1	2584 098	MOULDING PACKAGE, Rear Window Outside Lower (23-23-52)
	8	6001 648	Retainer and Screw
22	1	2584 182	MOULDING PACKAGE, Deck Opening Lower Panel Upper (23-23-33)
	4	6001 779	Clip and Seal
	2	---- ---	Nut
23	1	2584 183	MOULDING PACKAGE, Deck Lid Lower (23-23-30)
	8	6001 652	Retainer and Stud
	8	9417 621	Nut
24	1	2524 270	LETTER "C", Deck Opening Lower Panel Name (23-19-114)
	1	2524 271	"H" 1 2524 274 "S"
	2	2524 272	"R" 1 2524 275 "L"
	1	2524 273	"Y" 1 2524 276 "E"
	8	1839 995	Nut
25	1	2526 512	MOULDING, Deck Opening Lower Panel Fuel Filler Door (23-23-23)
	2	9413 268	Screw
26	1	2584 186-7	MOULDING PACKAGE, Deck Opening Lower Panel Lower (23-23-23)
	6	6001 778	Clip and Seal
27	1	2584 286-7	MOULDING PACKAGE, Quarter Outside Rear (23-23-39)
	2	6024 403	Screw 2 ---- --- Nut
28	1	2584 206-7	MOULDING PACKAGE, Quarter Outside Upper Rear (23-23-39)
	2	6024 637	Screw
	2	---- ---	Nut and Seal
29	1	2526 458-9	MOULDING, Quarter Outside Bumper Opening (23-23-39)
	6	6024 373	Screw
30	1	2527 984-5	MOULDING, Quarter Outside Rear Lower (23-23-39)
	4	6024 409	Screw
31	2	2526 510	NAME PLATE, Quarter Outside (Chrysler) (23-34-238)
	10	6025 433	Nut w/Seal
32	1	2584 284-5	MOULDING PACKAGE, Quarter Panel Upper Front (23-23-39)
	10	6001 667	Retainer
	8	6001 753	Retainer 8 6025 140 Nut
33	1	2584 180-1	MOULDING PACKAGE, Roof Side Extension Belt (23-23-42)
	2	2574 024	Retainer
	1	6001 799	Retainer 2 152 255 Nut
34	1	2584 288-9	MOULDING, Retainer and Stud Package, Quarter Wheel Opening Panel (23-23-39)
	4	6024 711	Washer 4 ---- --- Nut
35	1	2584 282-3	MOULDING PACKAGE, Body Side Sill Outside Panel (23-23-2)
	18	6001 750	Retainer 4 6023 682 Screw
36	1	2584 252-3	MOULDING PACKAGE, Rear Door Outside Upper (23-23-33)
	2	---- ---	Retainer
	6	6001 667	Retainer 2 9417 621 Nut
37	1	2584 236-7	MOULDING PACKAGE, Front Door Outside Upper (23-23-32)
	2	---- ---	Retainer
	6	6001 667	Retainer 2 9417 621 Nut

All Packages Include Attaching Parts

Part Type Code is Indicated in Parentheses

EXTERIOR VIEW - CHRYSLER C-L 4 DOOR SEDAN

MyMopar.com

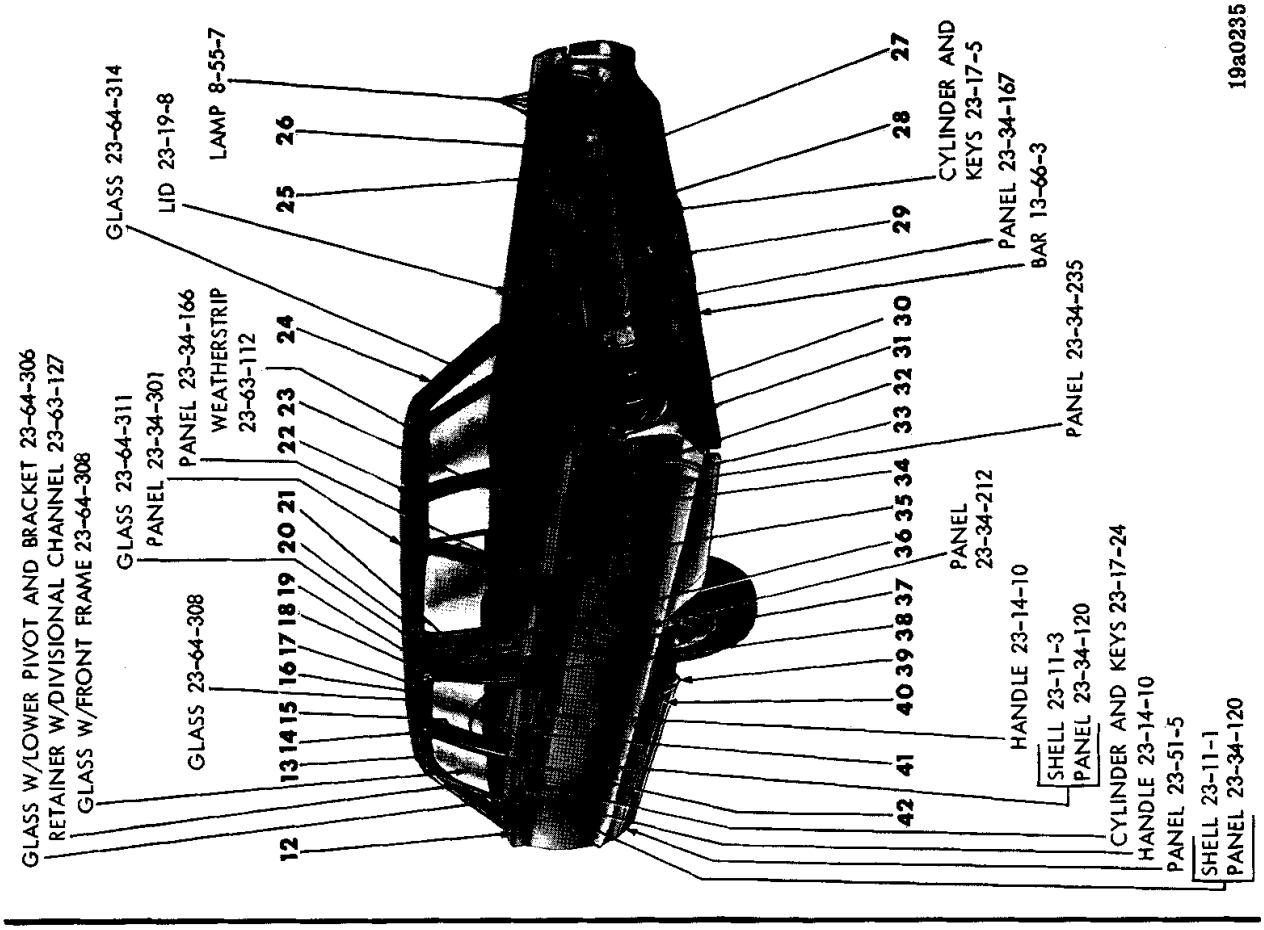

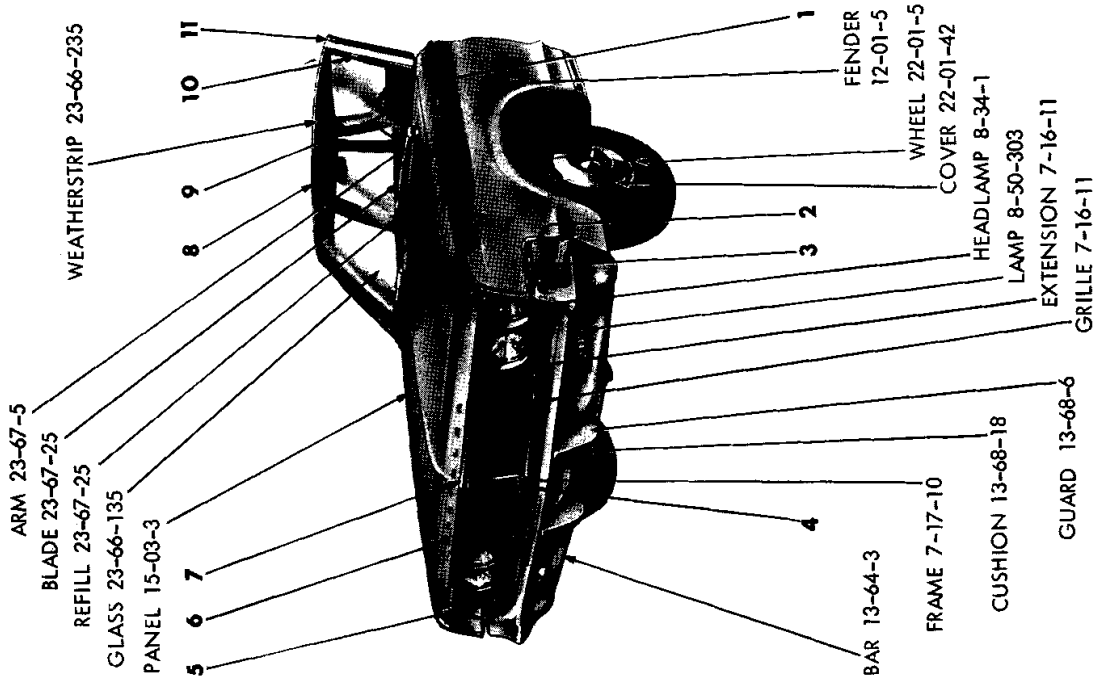

EXTERIOR VIEW - CHRYSLER C-L 4 DOOR SEDAN (6 WINDOW)

MyMopar.com

REF. NO.	QTY	PART NUMBER	DESCRIPTION
1	1	2584 488-9	MOULDING PACKAGE, Fender Peak (12-15-2)
	8	6001 667	Clip
	6	6001 753	Retainer 6 6025 140 Nut
2	1	2584 116-7	MOULDING PACKAGE, Front Bumper Fender (12-15-2)
	6	---- ---	Nut
3	1	2584 124-5	MOULDING PACKAGE, Fender Front Extension (12-15-2)
	4	6024 349	Screw 4 6023 164 Nut
4	1	2524 265	MEDALLION, Radiator Grille (7-17-1)
5	1	2584 112-3	MOULDING PACKAGE, Fender Front (12-15-2)
	2	6025 148	Screw 4 ---- --- Nut
6	1	2524 270	LETTER, Hood Front Name, "C" (15-06-16)
	1	2524 271	"H"
	2	2524 272	"R"
	1	2524 273	"Y"
	1	2524 274	"S"
	1	2524 275	"L"
	1	2524 276	"E"
	8	1839 995	Nut
7	1	2524 258	MOULDING, Hood Front (15-25-2)
	11	6024 895	Screw
8	1	2584 104	MOULDING PACKAGE, Windshield Outside Upper (23-23-65)
	8	6001 648	Retainer
9	1	2584 110-1	MOULDING PACKAGE, Windshield Outside Lower (23-23-65)
	10	6001 697	Retainer
10	1	2584 108-9	MOULDING PACKAGE, Windshield Outside Side (23-23-65)
	8	6001 648	Retainer
11	1	2529 264-5	MOULDING, Body Front Pillar Drain Trough (23-59-61)
12	1	2584 236-7	MOULDING PACKAGE, Front Door Outside Upper (23-23-32)
	2	---- ---	Retainer
	6	6001 667	Retainer 2 9417 621 Nut
13	1	2492 782-3	MOULDING, Front Door Window Opening Frame Upper (23-23-32)
14	1	2570 110-1	PANEL, Body Center Pillar Outside Finish Upper (23-23-16)
	4	6023 247	Screw
15	1	2492 796-7	MOULDING, Rear Door Window Opening Frame Front (23-23-33)
16	1	2573 944-5	MOULDING, Roof Side Drain Trough (23-59-61)
17	1	2492 798-9	MOULDING, Rear Door Window Opening Frame Upper (23-23-33)
18	1	2492 800-1	MOULDING, Rear Door Window Opening Frame Rear (23-23-33)
19	1	2584 200-1	MOULDING PACKAGE, Quarter Window Outside Upper (23-23-73)
	6	6024 659	Screw 2 2527 816 Clip
20	1	2584 202-3	MOULDING PACKAGE, Quarter Window Outside Rear (23-23-73)
	6	116 000	Nut
21	1	2573 946-7	MOULDING, Roof Side Drain Trough Rear (23-59-61)
22	1	2584 102-3	MOULDING PACKAGE, Rear Window Outside Upper (23-23-52)
	8	6001 648	Retainer
23	1	2584 098	MOULDING PACKAGE, Rear Window Outside Lower (23-23-52)
	8	6001 648	Retainer
24	1	2584 100-1	MOULDING PACKAGE, Rear Window Outside Side (23-23-52)
	6	6001 648	Retainer
25	1	2584 182	MOULDING PACKAGE, Deck Opening Lower Panel Upper (23-23-23)
	4	6001 779	Clip 2 ---- --- Nut
26	1	2584 183	MOULDING PACKAGE, Deck Lid Lower (23-23-30)
	8	6001 652	Retainer 8 9417 621 Nut
27	1	2524 270	NAME LETTER "C", Deck Opening Lower Panel (23-34-184)
	1	2524 271	"H"
	2	2524 272	"R"
	1	2524 273	"Y" 1 2524 275 "L"
	1	2524 274	"S" 1 2524 276 "E"
	8	1839 995	Nut
28	1	2526 512	MOULDING, Deck Opening Lower Pnl. Fuel Filler Door (23-23-23)
	2	9413 268	Screw
29	1	2584 186-7	MOULDING PACKAGE, Deck Opng. Lwr. Pnl. Lwr. (23-23-23)
	6	6001 778	Clip
30	1	2584 286-7	MOULDING PACKAGE, Quarter Panel Rear (23-23-39)
	2	6024 403	Screw 2 ---- --- Nut
31	1	2584 206-7	MOULDING PACKAGE, Quarter Panel Upr. Rr. (23-23-39)
	2	6024 637	Screw 2 ---- --- Nut
32	1	2526 458-9	MOULDING, Quarter Panel Bumper Opening (23-23-39)
	6	6024 373	Screw
33	1	2527 984-5	MOULDING, Quarter Panel Rear Lower (23-23-39)
	4	6024 409	Screw
34	2	2526 510	NAME PLATE, Quarter Outside, Chrysler (23-34-238)
	5	6025 433	Nut
35	1	2584 284-5	MOULDING PACKAGE, Quarter Panel Upr. Frt. (23-23-39)
	10	6001 667	Retainer
	8	6001 753	Retainer 8 6025 140 Nut
36	1	2584 192-3	MOULDING PACKAGE, Roof Side Ext. Belt, Prime (23-23-42)
	2	6001 767	Retainer and Seal
	1	2584 528-9	MOULDING PACKAGE, Roof Side Ext. Belt (Chrome)(23-23-42)
	2	6001 767	Retainer and Seal
37	1	2584 216-7	MOULDING PACKAGE, Quarter Panel Belt (23-23-39)
	6	6001 496	Retainer
38	1	2484 558-9	MOULDING, Quarter Window Outside Front (23-23-73)
	6	6023 247	Screw
39	1	2584 288-9	MOULDING PACKAGE, Quarter Wheelhouse Opening Panel (23-23-39)
	2	---- ---	Retainer
	4	6024 711	Washer 4 ---- --- Nut
40	1	2584 282-3	MOULDING PACKAGE, Body Side Sill Outside Panel (23-23-2)
	18	6001 750	Retainer 4 6023 682 Screw
41	1	2584 252-3	MOULDING PACKAGE, Rear Door Outside Upper (23-23-33)
	2	---- ---	Retainer
	6	6001 667	Retainer 2 9417 621 Nut
42	1	2492 784-5	MOULDING, Front Door Window Opening Frame Rear (23-23-32)

All Packages Include Attaching Parts

Part Type Code is Indicated in Parentheses

EXTERIOR VIEW - CHRYSLER C-L 4 DOOR SEDAN (6 WINDOW)

MyMopar.com

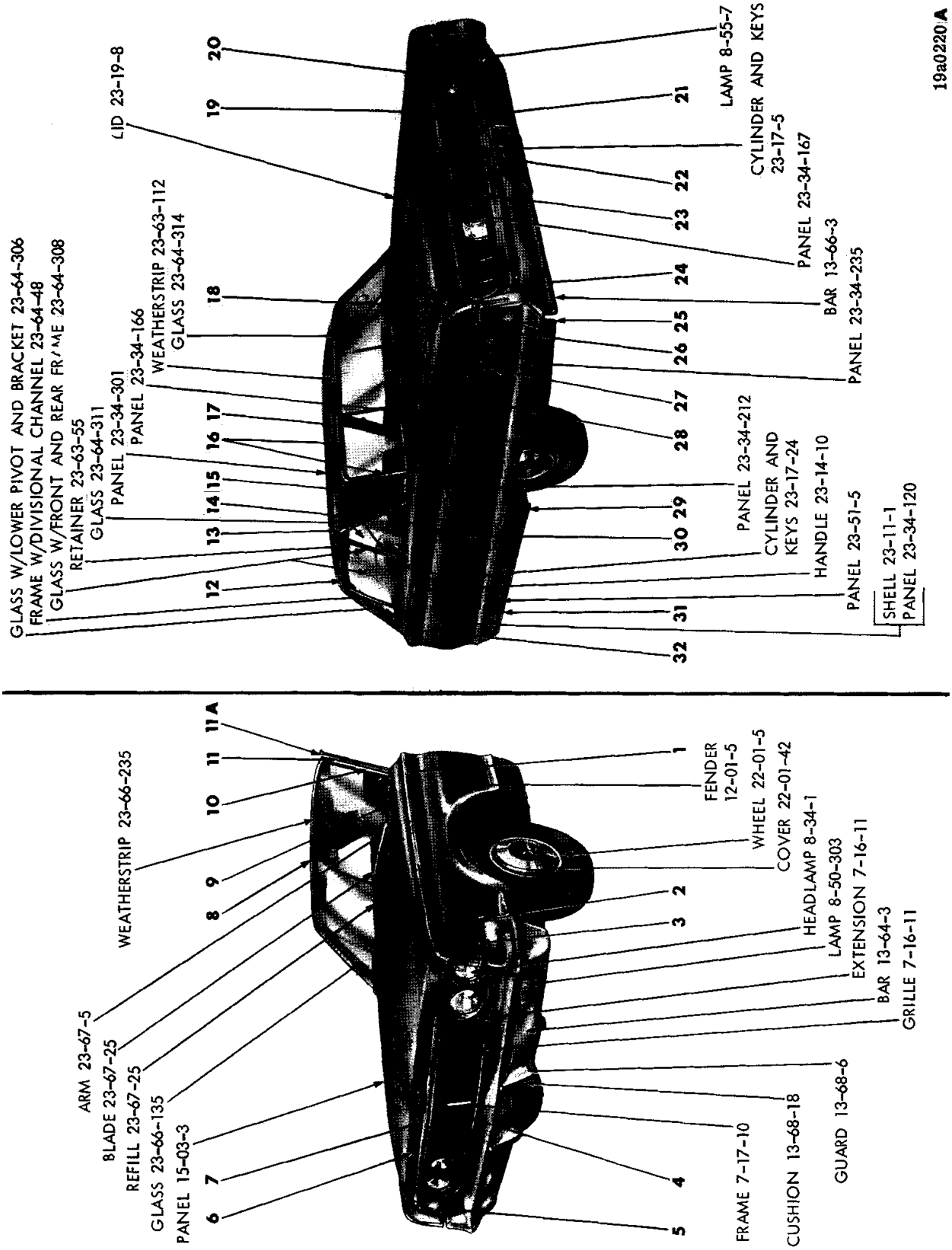

EXTERIOR VIEW - CHRYSLER C-L 2 DOOR HARDTOP

MyMopar.com

REF. NO.	QTY	PART NUMBER	DESCRIPTION
1	1	2584 122-3	MOULDING PACKAGE, Fender Peak (12-15-2)
	6	6001 753	Retainer
	8	6001 667	Clip 6 6025 140 Nut
2	1	2584 116-7	MOULDING PACKAGE, Front Bumper Fender (12-15-2)
	6	---- ---	Nut
3	1	2584 124-5	MOULDING PACKAGE, Fender Front Extension (12-15-2)
	4	6024 349	Screw 4 6023 164 Nut
4	1	2524 265	MEDALLION, Radiator Grille (7-17-1)
5	1	2584 112-3	MOULDING PACKAGE, Fender Front (12-15-2)
	4	---- ---	Nut 2 6025 148 Screw
6	1	2524 270	LETTER, Hood Front Name, "C" (15-06-16)
	1	2524 271	"H" 1 2524 274 "S"
	2	2524 272	"R" 1 2524 275 "L"
	1	2524 273	"Y" 1 2524 276 "E"
	8	1839 995	Nut
7	1	2524 258	MOULDING, Hood Front (15-25-2)
	11	6024 895	Screw
8	1	2584 099	MOULDING PACKAGE, Windshield Outside Upper (23-23-65)
	8	6001 648	Retainer
9	1	2584 110-1	MOULDING PACKAGE, Windshield Outside Lower (23-23-65)
	10	6001 697	Retainer
10	1	2584 106-7	MOULDING PACKAGE, Windshield Outside Side (23-23-65)
	8	6001 648	Retainer
11	1	2526 480-1	MOULDING, Roof Side Drain Trough Front (23-59-61)
11A	1	2574 850-1	MOULDING, Front Pillar Trim use w/Vinyl Roof (23-23-14)
	2	6023 682	Screw
12	1	2526 480-1	MOULDING, Roof Side Drain Trough Front (23-59-61)
13	1	2526 484-5	COVER, Roof Side Drain Trough Moulding Front (23-59-57)
14	1	2529 144-5	MOULDING, Quarter Window Glass Front (23-23-73)
15	1	2584 176-7	MOULDING PACKAGE, Roof Outside Extension Belt (23-23-42)
	4	9411 618	Nut
16	1	2525 596-7	MOULDING PACKAGE, Rear Window Outside Upper and Side (23-23-52) (Note #1)
	14	6001 648	Retainer
	1	2807 140-1	MOULDING PACKAGE, Rear Window Outside Upper and Side (23-23-52) (Note #2)
17	1	2525 595	MOULDING PACKAGE, Rear Window Outside Lower (23-23-52) (Note #1)
	7	6001 648	Retainer
	1	2807 138-9	MOULDING PACKAGE, Rear Window Outside Lower (23-23-52) (Note #2)
18	1	2584 206-7	MOULDING PACKAGE, Quarter Outside Upper Rear (23-23-39)
	2	---- ---	Nut
19	1	2584 182	MOULDING PACKAGE, Deck Opening Lower Panel Upper (23-23-23)
	4	6001 779	Clip 2 ---- --- Nut

All Packages Include Attaching Parts

REF. NO.	QTY	PART NUMBER	DESCRIPTION
20	1	2584 183	MOULDING PACKAGE, Deck Lid Lower (23-23-30)
	8	6001 652	Retainer
	8	9417 621	Nut
21	1	2524 270	NAME LETTER "C", Deck Opening Lower Panel (23-34-184)
	1	2524 271	"H"
	2	2524 272	"R"
	1	2524 273	"Y"
	1	2524 274	"S"
	1	2524 275	"L"
	1	2524 276	"E"
	8	1839 995	Nut
22	1	2526 512	MOULDING, Deck Opening Lower Panel Fuel Filler Door (23-23-23)
	2	9413 268	Screw
23	1	2584 186-7	MOULDING PACKAGE, Deck Opening Lower Panel Lower (23-23-23)
	6	6001 778	Clip
24	1	2584 286-7	MOULDING PACKAGE, Quarter Outside Rear (23-23-39)
	2	6024 403	Screw
	2	---- ---	Nut
25	1	2527 984-5	MOULDING, Quarter Outside Rear Lower (23-23-39)
	4	6024 409	Screw
26	1	2526 458-9	MOULDING, Quarter Outside Bumper Opening (23-23-39)
	6	6024 373	Screw
27	2	2526 510	NAME PLATE, Quarter Outside Chrysler (23-34-238)
	5	6025 433	Nut
	5	6000 050	Clip
28	1	2584 254-5	MOULDING PACKAGE, Quarter Outside Upper Front (23-23-39)
	18	6001 667	Retainer
	8	6001 753	Retainer
	8	6025 140	Nut
29	1	2584 288-9	MOULDING PACKAGE, Quarter Wheel Opening Panel (23-23-39)
	4	---- ---	Nut
	4	6024 711	Washer
	2	---- ---	Retainer
30	1	2526 482-3	MOULDING, Roof Side Drain Trough Rear (23-59-61)
31	1	2584 282-3	MOULDING PACKAGE, Body Side Sill Outside Panel (23-23-2)
	4	6023 682	Screw
	18	6001 750	Retainer
32	1	2584 234-5	MOULDING PACKAGE, Door Outside Upper (23-23-32)
	8	6001 667	Retainer
	2	---- ---	Retainer
	2	9417 621	Nut

NOTE 1: UP TO SERIAL NO. 195358
NOTE 2: AFTER SERIAL NO. 195358

Part Type Code is Indicated in Parentheses

EXTERIOR VIEW - CHRYSLER C-L 2 DOOR HARDTOP

MyMopar.com

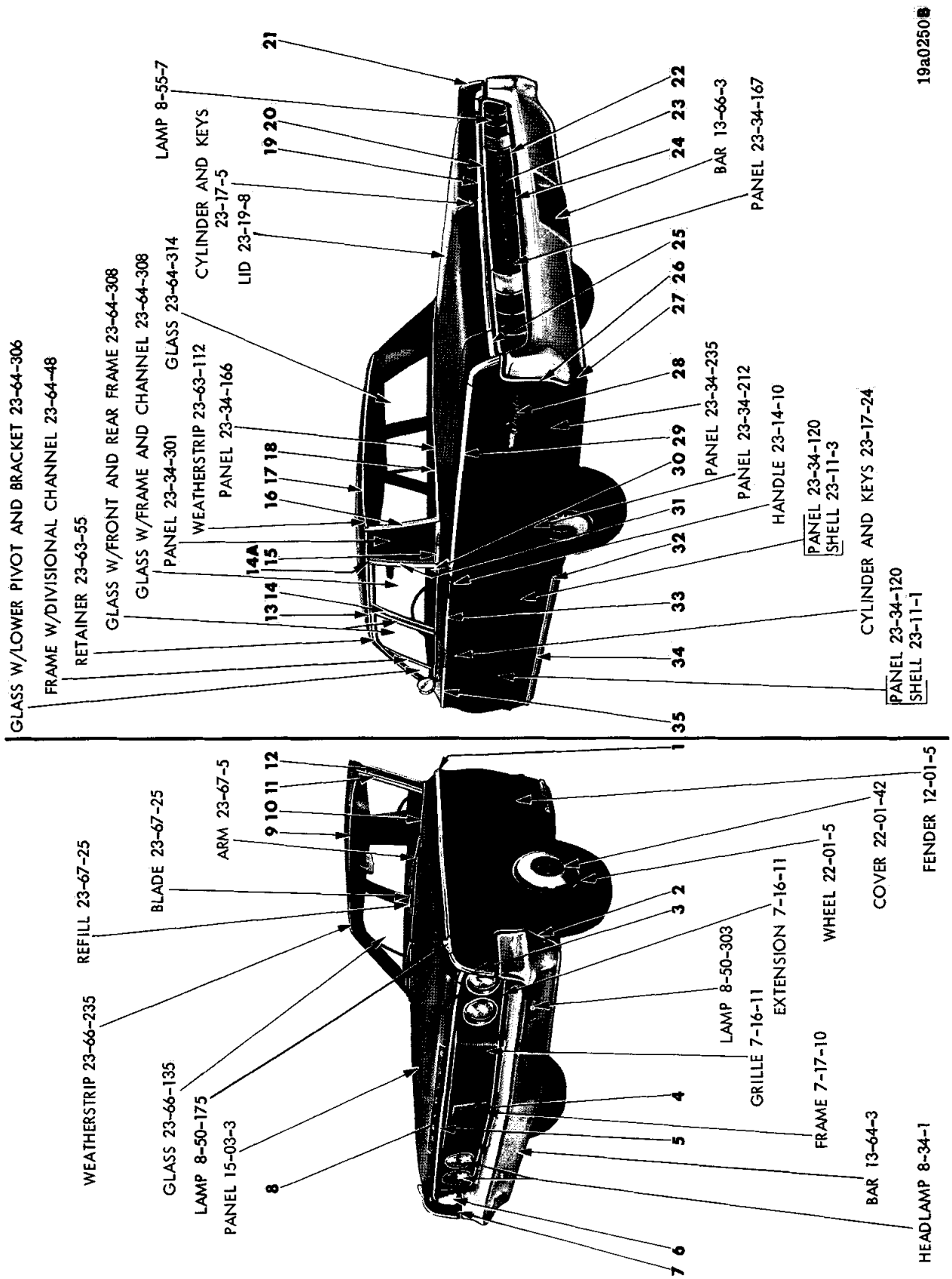

EXTERIOR VIEW - CHRYSLER C-L 4 DOOR HARDTOP

MyMopar.com

REF. NO.	QTY	PART NUMBER	DESCRIPTION
1	1	2584 120-1	MOULDING PACKAGE, Fender Peak Rear (12-15-2)
	8	6001 667	Clip
	6	6001 753	Retainer
	6	6025 140	Nut
2	1	2584 116-7	MOULDING PACKAGE, Front Bumper Fender (12-15-2)
	6	---- ---	Nut
3	1	2584 490-1	MOULDING PACKAGE, Fender Peak Front (12-15-2)
	4	6001 753	Retainer
	4	6025 140	Nut
4	1	2524 265	MEDALLION, Radiator Grille (7-17-1)
5	1	2524 258	MOULDING, Hood Front (15-25-2)
6	1	2584 112-3	MOULDING PACKAGE, Fender Front (12-15-2)
	4	---- ---	Nut
	2	6025 148	Screw
7	1	2584 124-5	MOULDING PACKAGE, Fender Front Extension (12-15-2)
	4	6024 349	Screw
	4	6023 164	Nut
8	1	2524 270	LETTER, Hood Front Name "C" (15-06-16)
	1	2524 271	"H"
	2	2524 272	"R"
	1	2524 273	"Y"
	1	2524 274	"S"
	1	2524 275	"L"
	1	2524 276	"E"
9	1	2584 099	MOULDING PACKAGE, Windshield Outside Upper (23-23-65)
	8	6001 648	Retainer
10	1	2584 110-1	MOULDING PACKAGE, Windshield Outside Lower (23-23-65)
	10	6001 697	Retainer
11	1	2584 106-7	MOULDING PACKAGE, Windshield Outside Side (23-23-65)
	8	6001 648	Retainer
12	1	2528 002-3	MOULDING, Body Front Pillar Drain Trough, w/o Vinyl Roof (Lgh. approx. 22") (23-59-61)
	8	9415 214	Washer
	1	2807 364-5	MOULDING PACKAGE, Body Front Pillar Drain Trough, w/o Vinyl Roof (Lgh. approx. 27") (23-59-61)
13	1	2573 222-3	MOULDING, Roof Side Drain Trough Front and Rear, w/o Vinyl Roof (Lgh. approx. 55") (23-59-61) (Note #1)
	★	6001 814	Retainer
	★	6001 815	Retainer
	14	9415 214	Washer
	8	6024 271	Washer
	1	2603 948-9	MOULDING, Roof Side Drain Trough Front and Rear, w/o Vinyl Roof (Lgh. approx. 55") (23-59-61) (Note #2)
	2	6001 815	Retainer
	2	6024 271	Washer
	14	9415 214	Retainer
	6	6023 370	Screw
	1	2807 368-9	MOULDING PACKAGE, Roof Side Drain Trough Front and Rear, w/o Vinyl Roof (Lgh. approx. 59 1/2") (23-59-61)
	1	2605 438-9	MOULDING, Roof Side Drain Trough, w/Vinyl Roof (23-59-61)
14	1	2664 678-9	MOULDING w/Weatherstrip Retainer, Rear Door Wdo. Glass Frame Front (23-23-33) (23-63-105)
	10	6024 997	Screw
14A	1	2573 546-7	COVER, Roof Side Drain Trough Moulding, w/Vinyl Roof (23-59-61)
15	1	2584 174-5	MOULDING PACKAGE, Roof Outside Extension Belt, w/o Vinyl Roof (23-23-42)
	6	---- ---	Washer
	6	9411 618	Nut
	1	2584 424-5	MOULDING PACKAGE, Roof Side Extension Belt, w/Vinyl Roof (23-23-42)
	6	---- ---	Washer
	6	---- ---	Nut
16	1	2525 592-3	MOULDING PACKAGE, Rear Window Outside Side (23-23-52)
	6	6001 648	Retainer and Screw
17	1	2525 598-9	MOULDING PACKAGE, Rear Window Outside Upper (23-23-52)
	8	6001 648	Retainer and Screw
18	1	2525 594	MOULDING PACKAGE, Rear Window Outside Lower (23-23-52)
	8	6001 648	Retainer and Screw
19	1	2584 183	MOULDING PACKAGE, Deck Lid Lower (23-23-30)
	8	6001 652	Retainer
	8	9417 621	Nut
20	1	2584 182	MOULDING PACKAGE, Deck Opening Lower Panel Upper (23-23-23)
	4	6001 779	Clip
	2	---- ---	Nut
21	1	2584 206-7	MOULDING PACKAGE, Quarter Outside Upper Rear (23-23-39)
	2	6024 637	Screw
	2	---- ---	Nut

NOTE 1: UP TO SERIAL NO. 116783
NOTE 2: AFTER SERIAL NO. 116783

CONTINUED ON NEXT PAGE

All Packages Include Attaching Parts

Part Type Code is Indicated in Parentheses

EXTERIOR VIEW - CHRYSLER C-L 4 DOOR HARDTOP

MyMopar.com

REF. NO.	QTY	PART NUMBER	DESCRIPTION
22	1	2584 186-7	MOULDING PACKAGE, Deck Opening Lower Panel Lower (23-23-23)
	6	6001 778	Clip
23	1	2524 270	LETTER "C", Deck Opening Lower Panel Name (23-34-184)
	1	2524 271	"H"
	2	2524 272	"R"
	1	2524 273	"Y"
	1	2524 274	"S"
	1	2524 275	"L"
	1	2524 276	"E"
	8	1839 995	Nut
24	1	2526 512	MOULDING, Deck Opening Lower Panel Fuel Filler Door (23-23-23)
	2	9413 268	Screw
25	1	2584 286-7	MOULDING PACKAGE, Quarter Panel Rear (23-23-39)
	2	6024 403	Screw
	2	---- ---	Nut
26	1	2526 458-9	MOULDING, Quarter Panel Bumper Opening (23-23-39)
	6	6024 373	Screw
27	1	2527 984-5	MOULDING, Quarter Panel Rear Lower (23-23-39)
	4	6024 409	Screw
28	2	2526 510	NAME PLATE, Quarter Panel, Chrysler (23-34-238)
	5	6025 433	Nut
29	1	2584 284-5	MOULDING PACKAGE, Quarter Panel Upper Front (23-23-39)
	10	6001 667	Retainer
	8	6001 753	Retainer
	8	6025 140	Nut
30	1	2571 172-3	ORNAMENT and WEATHER-STRIP, Rear Door Rear Inner (23-11-23) (23-63-33)
	1	2571 182-3	ORNAMENT and WEATHER-STRIP, Rear Door Rear Outer (23-11-23) (23-63-33)
	2	456 867	Screw
	4	6025 425	Screw
	2	9416 628	Screw
31	1	2526 852-3	MOULDING, Roof Panel Extension Front, w/o Vinyl Roof (23-23-42)
	4	9414 742	Screw
	1	2605 440-1	MOULDING, Roof Side Drain Trough Rear, w/Vinyl Roof (23-59-61)
32	1	2584 288-9	MOULDING PACKAGE, Quarter Wheel Opening Panel (23-23-39)
	4	---- ---	Nut
	2	---- ---	Retainer
	4	6024 711	Washer
33	1	2584 252-3	MOULDING PACKAGE, Rear Door Outside Upper (23-23-33)
	2	---- ---	Retainer
	6	6001 667	Retainer
	2	9417 621	Nut
34	1	2584 282-3	MOULDING PACKAGE, Body Side Sill Outside Panel (23-23-2)
	18	6001 750	Retainer
	4	6023 682	Screw
35	1	2584 236-7	MOULDING PACKAGE, Front Door Outside Upper (23-23-32)
	2	---- ---	Retainer
	2	9417 621	Nut
	6	6001 667	Retainer

All Packages Include Attaching Parts

Part Type Code is Indicated in Parentheses

EXTERIOR VIEW - CHRYSLER C-L 4 DOOR HARDTOP

MyMopar.com

NOTES

MyMopar.com

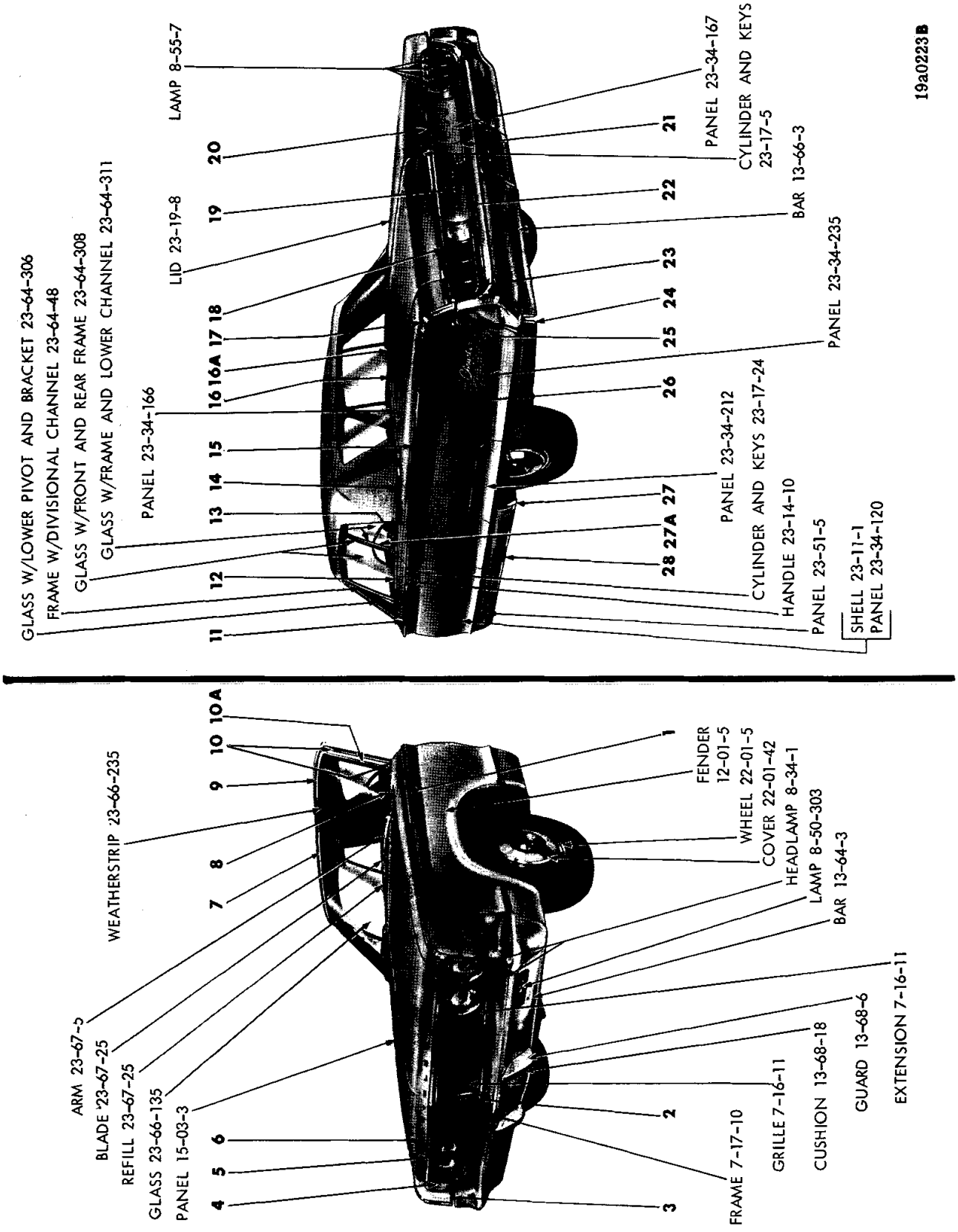

EXTERIOR VIEW - CHRYSLER C-L CONVERTIBLE COUPE

MyMopar.com

REF. NO.	QTY	PART NUMBER	DESCRIPTION
1	1	2584 122-3	MOULDING PACKAGE, Fender Peak (12-15-2)
	8	6001 667	Clip
	6	6001 753	Retainer
	6	6025 140	Nut
2	1	2524 265	MEDALLION, Radiator Grille (7-17-1)
3	1	2584 124-5	MOULDING PACKAGE, Fender Front Extension (12-15-2)
	4	6024 349	Screw
	4	6023 164	Nut
4	1	2584 112-3	MOULDING PACKAGE, Fender Front (12-15-2)
	4	---- ---	Nut
	2	6025 148	Screw
5	1	2524 258	MOULDING, Hood Front (15-25-2)
	11	6024 895	Screw
6	1	2524 270	LETTER, Hood Front Name, "C" (15-06-16)
	1	2524 271	"H"
	2	2524 272	"R"
	1	2524 273	"Y"
	1	2524 274	"S"
	1	2524 275	"L"
	1	2524 276	"E"
7	1	2584 099	MOULDING PACKAGE, Windshield Outside Upper (23-23-65)
	8	6001 648	Retainer
8	1	2584 110-1	MOULDING PACKAGE, Windshield Outside Lower (23-23-65)
	10	6001 697	Retainer
9	1	2484 602-3	MOULDING, Windshield Outside Upper Header (23-23-65)
	5	6025 132	Screw
10	1	2481 844-5	MOULDING, Body Front Upper Pillar Outside (23-23-14)
	8	9415 214	Screw
	1	2528 662-3	EXTENSION, Body Front Pillar Outside Mldg. Lwr. (23-23-14)
	4	9418 246	Screw
10A	1	2584 106-7	MOULDING PACKAGE, Windshield Outside Side (23-23-65)
	8	6001 648	Retainer
11	1	2584 234-5	MOULDING PACKAGE, Door Outside Upper (23-23-32)
	8	6001 667	Retainer
	2	---- ---	Retainer 2 9417 621 Nut
12	1	2584 214-5	MOULDING PACKAGE, Door Outside Belt (23-23-32)
	16	6001 496	Retainer
13	1	2584 220-1	MOULDING PACKAGE, Quarter Panel Belt (23-23-39)
	6	6001 496	Retainer 2 ---- --- Screw
14	1	2584 088-9	MOULDING PACKAGE, Quarter Panel Belt Rr. (23-23-39)
	2	2094 380	Fastener
	2	---- ---	Screw
15	1	2584 254-5	MOULDING PACKAGE, Quarter Panel Upper Front (23-23-39)
	18	6001 667	Retainer
	8	6001 753	Retainer
	8	6025 140	Nut
16	1	2584 082-3	MOULDING PACKAGE, Deck Opening Upper Panel (23-23-31)
	20	2094 380	Fastener
16A	1	2584 081	CAP PACKAGE, Deck Opening Upper Panel Mldg. (23-23-41)
	1	2094 380	Fastener
17	1	2584 206-7	MOULDING PACKAGE, Quarter Outside Upper Rear (23-23-39)
	2	6023 097	Nut
	2	---- ---	Nut
18	1	2584 182	MOULDING PACKAGE, Deck Opening Lower Panel Upper (23-23-23)
	4	6001 779	Clip
	2	---- ---	Nut
19	1	2524 270	NAME LETTER "C", Deck Opening Lower Panel (23-34-184)
	1	2524 271	"H"
	2	2524 272	"R"
	1	2524 273	"Y"
	1	2524 274	"S"
	1	2524 275	"L"
	1	2524 276	"E"
	8	1839 995	Nut
20	1	2584 183	MOULDING PACKAGE, Deck Lid Lower (Spec. Equip.) (23-23-30)
	8	6001 652	Retainer
	8	9417 621	Nut
21	1	2526 512	MOULDING, Deck Opening Lower Panel Fuel Filler Door (23-23-23)
	2	9413 268	Screw
22	1	2584 186-7	MOULDING PACKAGE, Deck Opening Lower Panel Lower (23-23-23)
	6	6001 778	Clip
23	1	2584 286-7	MOULDING PACKAGE, Quarter Panel Rear (Spec. Equip.) (23-23-39)
	2	6024 403	Screw
	2	---- ---	Nut
24	1	2527 984-5	MOULDING, Quarter Panel Rear Lower (23-23-39)
	4	6024 409	Screw
25	1	2526 458-9	MOULDING, Quarter Panel Bumper Opening (23-23-39)
	6	6024 373	Screw
26	2	2526 510	NAME PLATE, Quarter Panel Chrysler (23-34-238)
	5	6025 433	Nut
27	1	2584 288-9	MOULDING PACKAGE, Quarter Wheelhouse Opening Panel (Spec. Equip.) (23-23-39)
	4	---- ---	Nut
	4	6024 711	Washer
	2	---- ---	Retainer
27A	1	2529 096-7	MOULDING, Quarter Window Glass Front (23-23-73)
28	1	2584 282-3	MOULDING PACKAGE, Body Side Sill Outside Panel (Special Equipment) (23-23-2)
	4	6023 682	Screw
	18	6001 750	Retainer

All Packages Include Attaching Parts

Part Type Code is Indicated in Parentheses

EXTERIOR VIEW - CHRYSLER C-L CONVERTIBLE COUPE

MyMopar.com

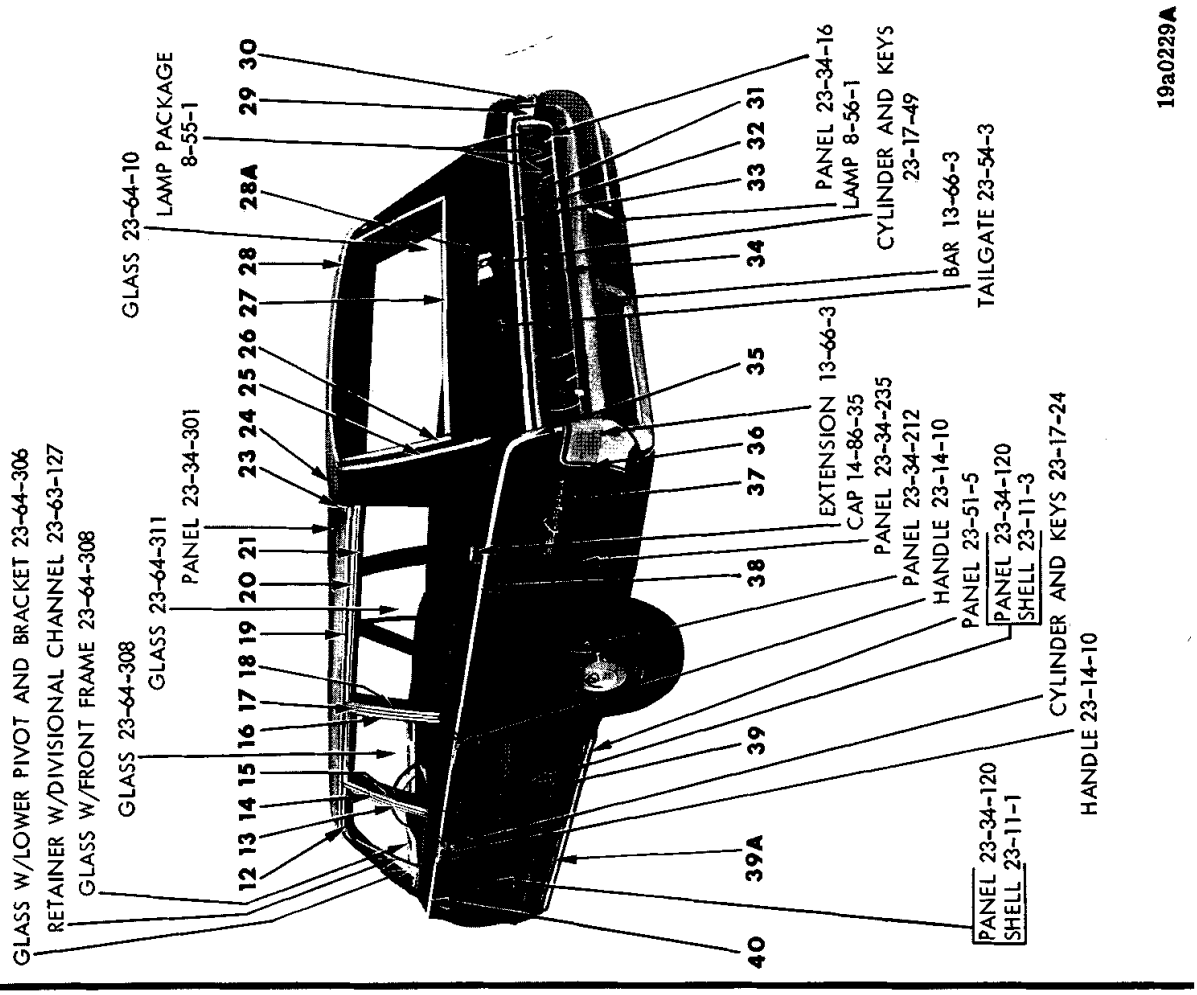

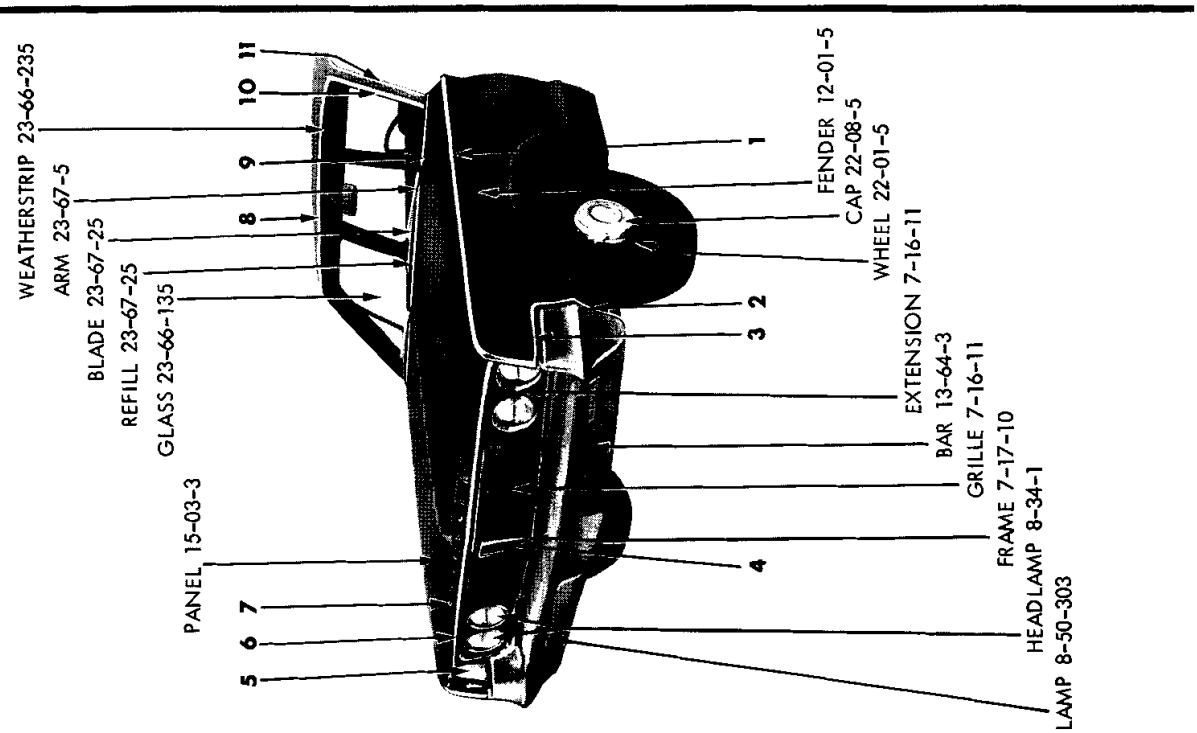

EXTERIOR VIEW - CHRYSLER C-L STATION WAGON

MyMopar.com

REF. NO.	QTY	PART NUMBER	DESCRIPTION
1	1	2584 122-3	MOULDING PACKAGE, Fender Peak (12-15-2)
	8	6001 667	Clip
	6	6001 753	Retainer
	6	6025 140	Nut
2	1	2584 116-7	MOULDING PACKAGE, Front Bumper Fender (12-15-2)
	6	---- ---	Nut
3	1	2584 124-5	MOULDING PACKAGE, Fender Front Extension (12-15-2)
	4	6024 349	Screw
	4	6023 164	Nut
4	1	2524 265	MEDALLION, Radiator Grille (7-17-1)
5	1	2584 112-3	MOULDING PACKAGE, Fender Front (12-15-2)
	2	6025 148	Screw
	4	---- ---	Nut
6	1	2524 258	MOULDING, Hood Front
	11	6024 895	Screw
7	1	2524 270	LETTER "C"
	1	2524 271	"H"
	2	2524 272	"R"
	1	2524 273	"Y"
	1	2524 274	"S"
	1	2524 275	"L"
	1	2524 276	"E"
	8	1839 995	Nut
8	1	2584 104	MOULDING PACKAGE, Windshield Outside Upper (23-23-65)
	8	6001 648	Retainer
9	1	2584 110-1	MOULDING PACKAGE, Windshield Outside Lower (23-23-65)
	10	6001 697	Retainer
10	1	2584 108-9	MOULDING PACKAGE, Windshield Outside Side (23-23-65)
	8	6001 648	Retainer
11	1	2529 924-5	MOULDING, Body Front Pillar Drain Trough (23-59-61)
	10	6024 271	Screw
12	1	2492 782-3	MOULDING, Front Door Window Opening Frame Upper (23-23-32)
13	1	2492 784-5	MOULDING, Front Door Window Opening Frame Rear (23-23-32)
14	1	2570 110-1	PANEL, Body Center Pillar Outside Finish Upper (23-23-16)
	4	6023 247	Screw
15	1	2492 796-7	MOULDING, Rear Door Window Opening Frame Front (23-23-33)
16	1	2492 808-9	MOULDING, Rear Door Window Opening Frame Rear (23-23-33)
17	1	2492 806-7	MOULDING, Rear Door Window Opening Frame Upper (23-23-33)
18	1	2528 562-3	MOULDING, Quarter Window Outside Front, Stainless Steel (23-23-73)
	8	6023 247	Screw
19	1	2526 532-3	MOULDING, Roof Side Drain Trough (23-59-61)
20	1	2528 584-5	COVER PACKAGE, Qtr. Wdo. Outside Upr. Mldg., Stainless Steel (23-23-73)
	12	116 000	Nut
21	1	2584 450-1	MOULDING PACKAGE, Quarter Window Outside Upper Prime
	2	2529 938	Seal
	12	6001 837	Retainer
	12	6025 001	Nut
23	1	2584 522-3	MOULDING PACKAGE, Roof Outside Rear (23-23-42)
	2	2573 890	Retainer
	6	2573 888	Washer
	2	---- ---	Nut
	6	6023 248	Screw
	1	2573 948-9	MOULDING, Roof Outside Rear Inner Corner (23-23-42)
	1	2526 540-1	MOULDING, Roof Outside Rear Outer Corner (23-23-45)
24	1	2584 442-3	MOULDING PACKAGE, Roof Outside Front (23-23-42)
	24	2573 888	Washer
	★	2573 768	Retainer
	24	6023 248	Screw
25	1	2586 278-9	MOULDING PACKAGE, Rear Upper Pillar Outside (23-23-60)
	6	---- ---	Clip
26	1	2584 444-5	MOULDING PACKAGE, Rear Upper Pillar Tailgate Opening (23-23-60)
	6	6001 620	Clip
27	1	2528 795	MOULDING, Tailgate Outside Belt (23-23-61)
28	1	2584 421	MOULDING PACKAGE, Roof Outside Rear (23-23-42)
	8	6001 816	Clip
	1	2586 106	MOULDING PACKAGE, Roof Outside Rear (used w/Outside Assist Handle) (23-23-42)
	8	6001 816	Clip
28A	1	2486 686	ORNAMENT, Tailgate Electric Window Regulator Outside (23-54-11)
29	1	2573 568-9	MOULDING, Quarter Outside Tail Lamp Opening (23-23-39)
	4	6023 681	Screw
	★	---- ---	Sealer
	2	6024 638	Screw
30	1	2573 096-7	MOULDING, Quarter Outside Bumper Opening Inner Extension (23-23-39)
	2	6024 638	Screw
	4	6023 681	Screw
31	1	2584 190	MOULDING PACKAGE, Tailgate Outside Intermediate (23-23-61)
	6	6001 781	Retainer
	6	116 000	Nut

CONTINUED ON NEXT PAGE

All Packages Include Attaching Parts

Part Type Code is Indicated in Parentheses

EXTERIOR VIEW - CHRYSLER C-L STATION WAGON

MyMopar.com

REF. NO.	QTY	PART NUMBER	DESCRIPTION
32	1	2524 270	NAME LETTER "C", Tailgate Outside Panel (23-54-11)
	1	2524 271	"H"
	2	2524 272	"R"
	1	2524 273	"Y"
	1	2524 274	"S"
	1	2524 275	"L"
	1	2524 276	"E"
	8	6024 286	Clip
33	1	2584 188	MOULDING PACKAGE, Tailgate Outside Upper (23-23-61)
	7	6001 777	Retainer
	7	116 000	Nut
34	1	2584 191	MOULDING PACKAGE, Tailgate Outside Lower (23-23-61)
	6	6001 773	Retainer
35	1	2584 228-9	MOULDING PACKAGE, Quarter Panel Upper Rear (23-23-39)
	2	6024 637	Screw
	4	6001 547	Clip
36	1	2526 460-1	MOULDING, Quarter Panel Bumper Opening (23-23-39)
	8	6024 373	Screw
37	2	2526 510	NAME PLATE, Quarter Panel Chrysler (23-34-238)
	5	6025 433	Nut
38	1	2584 284-5	MOULDING PACKAGE, Quarter Panel Upper Front (23-23-39)
	10	6001 667	Retainer
	8	6001 753	Retainer
	8	6025 140	Nut
39	1	2584 252-3	MOULDING PACKAGE, Rear Door Outside Upper (23-23-33)
	2	---- ---	Retainer
	6	6001 667	Retainer
	2	9417 621	Nut
39A	1	2584 278-9	MOULDING PACKAGE, Body Side Sill (23-23-2)
	4	6023 682	Screw
	18	6001 750	Retainer
40	1	2584 236-7	MOULDING PACKAGE, Front Door Outside Upper (23-23-32)
	2	---- ---	Retainer
	6	6001 667	Retainer
	2	9417 621	Nut

All Packages Include Attaching Parts

Part Type Code is Indicated in Parentheses

EXTERIOR VIEW - CHRYSLER C-L STATION WAGON

MyMopar.com

CODE	PART NAME AND DESCRIPTION	PER CAR	VALIANT / DART	PLYMOUTH BELVEDERE / DODGE CORONET	PLYMOUTH FURY / DODGE POLARA / CHRYSLER	IMPERIAL

NOTES

TYPE LETTERS Indicate:

V - Valiant	R - Belvedere	P - Plymouth	C - Chrysler
L - Dart	W - Coronet	D - Dodge	Y - Imperial

★Indicates use as required.
⊟Indicates parts not listed in any previous parts book.

Printed in U.S.A.
Prices and specifications subject to change without notice.

MyMopar.com

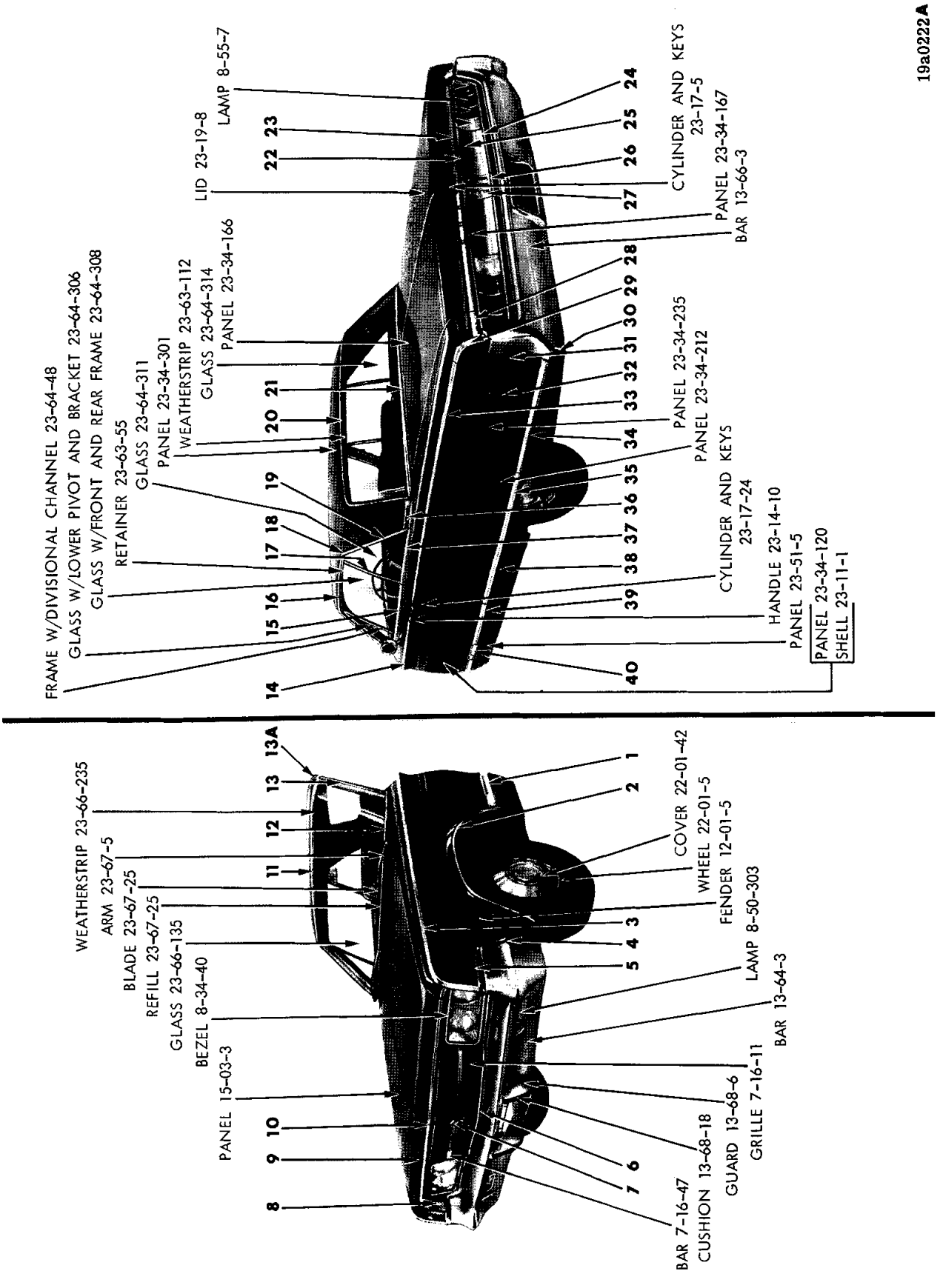

EXTERIOR VIEW - CHRYSLER C-M 2 DOOR HARDTOP

MyMopar.com

REF. NO.	QTY	PART NUMBER	DESCRIPTION
1	1	2584 114-5	MOULDING PACKAGE, Fender Side Lower (12-15-2)
	4	6024 731	Washer
	2	---- ---	Nut
	2	---- ---	Nut
2	1	2524 786-7	MOULDING PACKAGE, Fender Wheel Opening (12-15-2)
	12	6024 271	Screw
3	1	2584 488-9	MOULDING PACKAGE, Fender Peak (12-15-2)
	8	6001 667	Clip
	6	6001 753	Retainer
	6	6025 140	Nut
4	1	2584 116-7	MOULDING PACKAGE, Front Bumper Fender (12-15-2)
	6	---- ---	Nut
5	1	2584 124-5	MOULDING PACKAGE, Fender Front Extension (12-15-2)
	4	6024 349	Screw
	4	6023 164	Nut
6	1	2524 084-5	FRAME, Radiator Grille (7-16-36)
7	1	2524 268	MEDALLION, Radiator Grille (7-17-1)
8	1	2584 112-3	MOULDING PACKAGE, Fender Front (12-15-2)
	4	---- ---	Nut
	2	6025 148	Screw
9	1	2524 270	LETTER, Hood Front Name, "C" (15-06-16)
	1	2524 271	"H"
	2	2524 272	"R"
	1	2524 273	"Y"
	1	2524 274	"S"
	1	2524 275	"L"
	1	2524 276	"E"
	8	1839 995	Nut
10	1	2524 258	MOULDING, Hood Front (15-25-2)
	11	6024 895	Screw
11	1	2584 099	MOULDING PACKAGE, Windshield Outside Upper (23-23-65)
	8	6001 648	Retainer
12	1	2584 110-1	MOULDING PACKAGE, Windshield Outside Lower (23-23-65)
	10	6001 697	Retainer
13	1	2584 106-7	MOULDING PACKAGE, Windshield Outside Side (23-23-65)
	8	6001 648	Retainer
13A	1	2574 850-1	MOULDING, Front Pillar Trim, use w/Vinyl Roof (23-23-14)
	2	6023 682	Screw
14	1	2584 234-5	MOULDING PACKAGE, Door Outside Upper (23-23-32)
	8	6001 667	Retainer
	2	---- ---	Retainer
	2	9417 621	Nut
15	1	2584 214-5	MOULDING PACKAGE, Door Outside Belt (23-23-32)
	18	6001 496	Retainer
	2	---- ---	Retainer
16	1	2526 480-1	MOULDING, Roof Side Drain Trough Front (23-59-61)
17	1	2529 144-5	MOULDING, Quarter Window Glass Front (23-23-73)
18	1	2526 484-5	COVER, Roof Side Drain Trough Moulding Front (23-59-57)
19	1	2526 482-3	MOULDING, Roof Side Drain Trough Rear (23-59-61)
20	1	2525 596-7	MOULDING PACKAGE, Rear Window Outside Upper and Side (23-23-52) (Note #1)
	14	6001 648	Retainer
	1	2807 140-1	MOULDING PACKAGE, Rear Window Outside Upper and Side (23-23-52) (Note #2)
21	1	2525 595	MOULDING PACKAGE, Rear Window Outside Lower (23-23-52) (Note #1)
	7	6001 648	Retainer
	1	2807 138-9	MOULDING PACKAGE, Rear Window Outside Lower (23-23-52) (Note #2)
22	1	2584 182	MOULDING PACKAGE, Deck Opening Lower Panel Upper (23-23-23)
	4	6001 779	Clip
	2	---- ---	Nut
23	1	2584 184	MOULDING PACKAGE, Deck Lid Lower, Chrysler (23-23-30)
	8	6001 652	Retainer
	8	9417 621	Nut
24	1	2584 186-7	MOULDING PACKAGE, Deck Opening Lower Panel Lower (23-23-23)
	6	6001 778	Clip
25	1	2526 514-5	PANEL, Deck Opening Lower Finish (23-23-28)
	4	6024 564	Screw
26	1	2526 512	MOULDING, Deck Opening Lower Panel Fuel Filler Door (23-23-23)
	2	9413 268	Screw
27	1	2528 858	NUMERAL "3", Deck Opening Lower Panel Fuel Filler Door (23-34-184)
	2	2528 859	"0"
	6	6023 260	Nut
28	1	2584 286-7	MOULDING PACKAGE, Quarter Panel Rear (23-23-39)
	2	6024 403	Screw
	2	---- ---	Nut
29	1	2584 206-7	MOULDING PACKAGE, Quarter Panel Upper Rear (23-23-39)
	2	6024 637	Screw
	2	---- ---	Nut
30	1	2527 984-5	MOULDING, Quarter Panel Rear Lower (23-23-39)
	4	6024 409	Screw
31	1	2526 458-9	MOULDING, Quarter Panel Bumper Opening (23-23-39)
	6	6024 373	Screw
32	1	2528 092-3	MEDALLION, Quarter Outside (23-34-334)
	8	6023 260	Nut
33	1	2584 254-5	MOULDING PACKAGE, Quarter Panel Upper Front (23-23-39)
	18	6001 667	Retainer
	8	6001 753	Retainer
	8	6025 140	Nut

NOTE 1: UP TO SERIAL NO. 195358
NOTE 2: AFTER SERIAL NO. 195358

All Packages Include Attaching Parts

Part Type Code is Indicated in Parentheses

CONTINUED ON NEXT PAGE

EXTERIOR VIEW - CHRYSLER C-M 2 DOOR HARDTOP

MyMopar.com

REF. NO.	QTY	PART NUMBER	DESCRIPTION
34	1	2584 260-1	MOULDING PACKAGE, Quarter Panel Lower Rear (23-23-39)
	8	6001 821	Clip
	8	---- ---	Sealer
	8	6006 438	Nut
	2	6001 819	Clip
35	1	2584 264-5	MOULDING PACKAGE, Quarter Outside Wheelhouse Opening Panel (23-23-39)
	8	---- ---	Clip
	8	---- ---	Sealer
	8	6006 438	Nut
36	1	2584 178-9	MOULDING PACKAGE, Roof Outside Extension Belt (23-23-42)
	4	---- ---	Washer
	4	9411 618	Nut
37	1	2584 218-9	MOULDING PACKAGE, Quarter Panel Belt (23-23-39)
	12	6001 496	Retainer
38	1	2584 262-3	MOULDING PACKAGE, Quarter Panel Lower Front (23-23-39)
	8	6001 819	Clip
39	1	2584 242-3	MOULDING PACKAGE, Door Outside Lower Rear (23-23-32)
	4	6001 819	Clip
	2	---- ---	Clip, Right
	2	6001 829	Clip, Left
	2	9417 621	Nut
40	1	2584 240-1	MOULDING PACKAGE, Door Outside Lower Front (23-23-32)
	2	---- ---	Nut
	4	---- ---	Nut

All Packages Include Attaching Parts

Part Type Code is Indicated in Parentheses

EXTERIOR VIEW - CHRYSLER C-M 2 DOOR HARDTOP

MyMopar.com

CODE	PART NAME AND DESCRIPTION	CYL	PER CAR	VALIANT / DART	PLYMOUTH BELVEDERE / DODGE CORONET	PLYMOUTH FURY / DODGE POLARA / CHRYSLER	IMPERIAL

NOTES

TYPE LETTERS Indicate: V - Valiant, L - Dart, R - Belvedere, W - Coronet, P - Plymouth, D - Dodge, C - Chrysler, Y - Imperial

★Indicates use as required.

⊟Indicates parts not listed in any previous parts book.

MyMopar.com

Prices and specifications subject to change without notice.

Printed in U.S.A.

May, 1965 Supersedes Nov. 30, 1964.

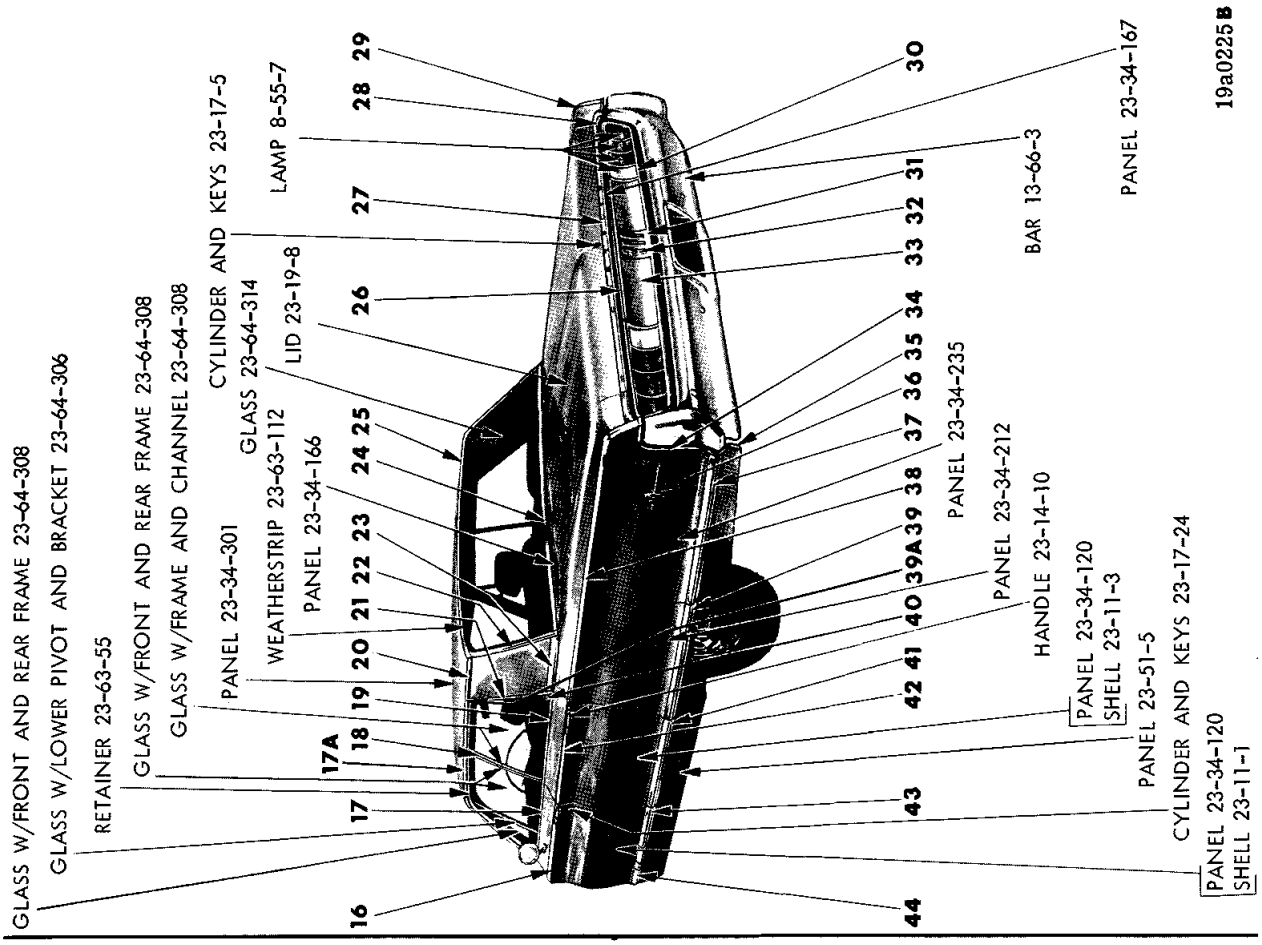

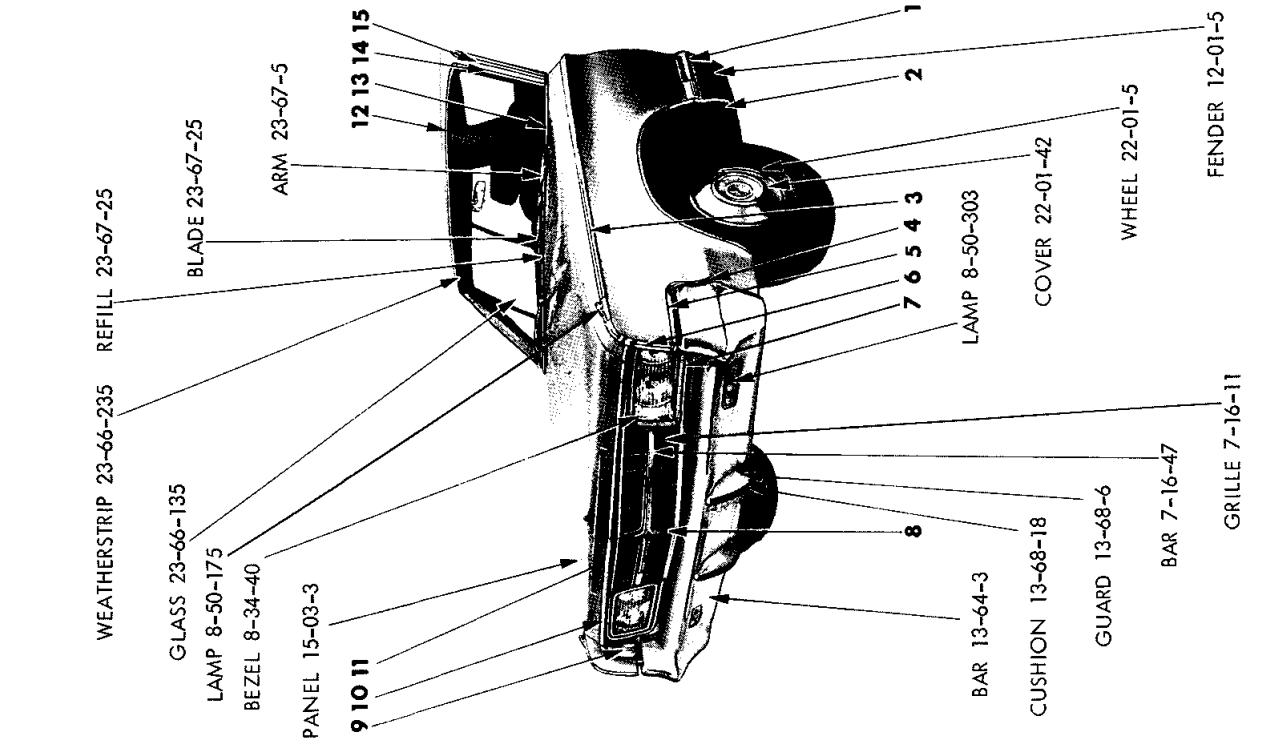

EXTERIOR VIEW - CHRYSLER C-M 4 DOOR HARDTOP

MyMopar.com

REF. NO.	QTY	PART NUMBER	DESCRIPTION
1	1	2584 114-5	MOULDING PACKAGE, Fender Side Lower (12-15-2)
	4	6024 731	Washer
	2	---- ---	Nut
	2	---- ---	Nut
2	1	2524 786-7	MOULDING PACKAGE, Fender Wheel Opening (12-15-2)
	12	6024 271	Screw
3	1	2584 120-1	MOULDING PACKAGE, Fender Peak Rear (12-15-2)
	6	6001 753	Retainer
	8	6001 667	Clip
	6	6025 140	Nut
4	1	2584 116-7	MOULDING PACKAGE, Front Bumper Fender (12-15-2)
	6	---- ---	Nut
5	1	2584 124-5	MOULDING PACKAGE, Fender Front Extension (12-15-2)
	4	6024 349	Screw
	4	6023 164	Nut
6	1	2584 118-9	MOULDING PACKAGE, Fender Peak Front (12-15-2)
	4	6001 753	Retainer
	4	6025 140	Nut
7	1	2524 084-5	FRAME, Radiator Grille (7-16-36)
8	1	2524 268	MEDALLION, Radiator Grille (7-17-1)
9	1	2584 112-3	MOULDING PACKAGE, Fender Front (12-15-2)
	4	---- ---	Nut
	2	6025 148	Screw
10	1	2524 258	MOULDING PACKAGE, Hood Front (15-25-2)
	11	6024 895	Screw
11	1	2524 270	LETTER, Hood Front Name, "C" (15-06-16)
	1	2524 271	"H"
	2	2524 272	"R"
	1	2524 273	"Y"
	1	2524 274	"S"
	1	2524 275	"L"
	1	2524 276	"E"
	8	1839 995	Nut
12	1	2584 099	MOULDING PACKAGE, Windshield Outside Upper (23-23-65)
	8	6001 648	Retainer
13	1	2584 110-1	MOULDING PACKAGE, Windshield Outside Lower (23-23-65)
	10	6001 697	Retainer
14	1	2584 106-7	MOULDING PACKAGE, Windshield Outside Side (23-23-65)
	8	6001 648	Retainer
15	1	2528 002-3	MOULDING, Body Front Pillar Drain Trough, w/o Vinyl Roof (Lgh. approx. 22") (23-59-61)
	8	9415 214	Washer
	1	2807 364-5	MOULDING PACKAGE, Body Front Pillar Drain Trough, w/o Vinyl Roof (Lgh. approx. 27") (23-59-61)
	6	6023 370	Screw
	1	2605 436-7	MOULDING, Body Front Pillar Drain Trough, w/Vinyl Roof (23-59-61)
16	1	2584 236-7	MOULDING PACKAGE, Front Door Outside Upper (23-23-32)
	2	---- ---	Retainer
	6	6001 667	Retainer
	2	9417 621	Nut
17	1	2584 212-3	MOULDING PACKAGE, Front Door Outside Belt (23-23-32)
	16	6001 496	Retainer
17A	1	2605 438-9	MOULDING, Roof Side Drain Trough, w/Vinyl Roof (23-59-61)
18	1	2664 678-9	MOULDING w/Weatherstrip Retainer, Rear Door Window Glass Frame Front (23-23-33) (23-63-105)
	10	6024 997	Screw
19	1	2584 248-9	MOULDING PACKAGE, Rear Door Outside Belt (23-23-33)
	2	---- ---	Retainer
	10	6001 797	Clip
20	1	2573 222-3	MOULDING, Roof Side Drain Trough Front and Rear, w/o Vinyl Roof (Lgh. approx. 55") (23-59-61)(Note #1)
	★	6001 815	Retainer
	8	6024 271	Washer
	14	9415 214	Screw
	1	2603 948-9	MOULDING, Roof Side Drain Trough Front and Rear, w/o Vinyl Roof (Lgh. approx. 55") (23-59-61) (Note #2)
	2	6001 815	Retainer
	2	6024 271	Washer
	14	9415 214	Retainer
	6	6023 370	Screw
	1	2807 368-9	MOULDING PACKAGE, Roof Side Drain Trough, Front and Rear, w/o Vinyl Roof (Lgh. approx. 60")(23-59-61)
21	1	2526 852-3	MOULDING, Roof Panel Extension Front, w/o Vinyl Roof (23-23-42)
	4	9414 742	Screw
	1	2605 440-1	MOULDING, Roof Side Drain Trough Rear, w/Vinyl Roof (23-59-61)
22	1	2525 592-3	MOULDING PACKAGE, Rear Window Outside Side (23-23-52)
	6	6001 648	Retainer
23	1	2584 172-3	MOULDING PACKAGE, Roof Outside Extension Belt, w/o Vinyl Roof (23-23-42)
	6	6022 077	Washer
	6	9411 618	Nut
	1	2584 424-5	MOULDING PACKAGE, Roof Side Extension Belt, w/Vinyl Roof (23-23-42)
	6	---- ---	Washer
	6	---- ---	Nut

NOTE 1: UP TO SERIAL NO. 116783
NOTE 2: AFTER SERIAL NO. 116783

CONTINUED ON NEXT PAGE

All Packages Include Attaching Parts

Part Type Code is Indicated in Parentheses

EXTERIOR VIEW - CHRYSLER C-M 4 DOOR HARDTOP

MyMopar.com

REF. NO.	QTY	PART NUMBER	DESCRIPTION
24	1	2525 594	MOULDING PACKAGE, Rear Window Outside Lower (23-23-52)
	8	6001 648	Retainer
25	1	2525 598-9	MOULDING PACKAGE, Rear Window Outside Upper (23-23-52)
	8	6001 648	Retainer
26	1	2584 182	MOULDING PACKAGE, Deck Opening Lower Panel Upper (23-23-23)
	4	6001 779	Clip
	2	---- ---	Nut
27	1	2584 184	MOULDING PACKAGE, Deck Lid Lower, Chrysler (23-23-30)
	8	6001 652	Retainer
	8	9417 621	Nut
28	1	2584 286-7	MOULDING PACKAGE, Quarter Outside Rear (23-23-39)
	2	6024 403	Screw
	2	---- ---	Nut
29	1	2584 206-7	MOULDING PACKAGE, Quarter Outside Upper Rear (23-23-39)
	2	6024 637	Screw
	2	---- ---	Nut
30	1	2584 186-7	MOULDING PACKAGE, Deck Opening Lower Panel Lower (23-23-23)
	6	6001 778	Clip
31	1	2526 512	MOULDING, Deck Opening Lower Panel Fuel Filler Door (23-23-23)
	2	9413 268	Screw
32	1	2528 858	NUMERAL "3", Deck Opening Lower Panel Fuel Filler Door (23-34-184)
	2	2528 859	"0"
	6	6023 260	Nut
33	1	2526 514-5	PANEL, Deck Opening Lower Finish (23-23-28)
	4	6024 560	Screw
34	1	2526 458-9	MOULDING, Quarter Panel Bumper Opening (23-23-39)
	6	6024 373	Screw
35	1	2527 984-5	MOULDING, Quarter Panel Rear Lower (23-23-39)
	4	6024 409	Screw
36	1	2528 092-3	MEDALLION, Quarter Panel (23-34-334)
	8	6023 260	Nut
37	1	2584 260-1	MOULDING PACKAGE, Quarter Panel Lower Rear (23-23-39)
	8	---- ---	Sealer
	8	6001 821	Clip
	2	6001 819	Clip
	8	6006 438	Nut
38	1	2584 284-5	MOULDING PACKAGE, Quarter Panel Upper Front (23-23-39)
	10	6001 667	Retainer
	8	6001 753	Retainer
	8	6025 140	Nut
39	1	2584 264-5	MOULDING PACKAGE, Quarter Outside Wheel Opening Panel (23-23-39)
	8	---- ---	Clip
	8	---- ---	Sealer
	8	6006 438	Nut
39A	1	2573 546-7	COVER, Roof Side Drain Trough Moulding Rear, w/Vinyl Roof (23-59-57)
40	1	2571 172-3	ORNAMENT and WEATHERSTRIP, Rear Door Rear Inner (23-11-33) (23-63-33)
	1	2571 184-5	ORNAMENT and WEATHERSTRIP, Rear Door Rear Outer (23-11-33) (23-63-33)
	4	---- ---	Screw
	4	6025 425	Screw
	2	456 867	Screw
	2	9416 628	Screw
41	1	2584 258-9	MOULDING PACKAGE, Rear Door Outside Lower (23-23-33)
	10	6001 819	Clip
42	1	2584 252-3	MOULDING PACKAGE, Rear Door Outside Upper (23-23-33)
	2	6001 771	Retainer
	6	6001 667	Retainer
	2	6026 335	Nut
43	1	2584 244-5	MOULDING PACKAGE, Front Door Outside Lower Rear (23-23-32)
	2	---- ---	Clip, Right
	2	6001 829	Clip, Left
	2	6001 819	Clip
	4	9417 621	Nut
44	1	2584 240-1	MOULDING PACKAGE, Front Door Outside Lower Front (23-23-32)
	2	---- ---	Nut
	4	---- ---	Nut

All Packages Include Attaching Parts

Part Type Code is Indicated in Parentheses

EXTERIOR VIEW - CHRYSLER C-M 4 DOOR HARDTOP

MyMopar.com

CODE	PART NAME AND DESCRIPTION	CYL	PER CAR	VALIANT / DART	PLYMOUTH BELVEDERE / DODGE CORONET	PLYMOUTH FURY / DODGE POLARA / CHRYSLER	IMPERIAL

NOTES

TYPE LETTERS Indicate:

V - Valiant	R - Belvedere	P - Plymouth	C - Chrysler
L - Dart	W - Coronet	D - Dodge	Y - Imperial

★Indicates use as required.

⊟Indicates parts not listed in any previous parts book.

Printed in U.S.A.

Prices and specifications subject to change without notice.

MyMopar.com

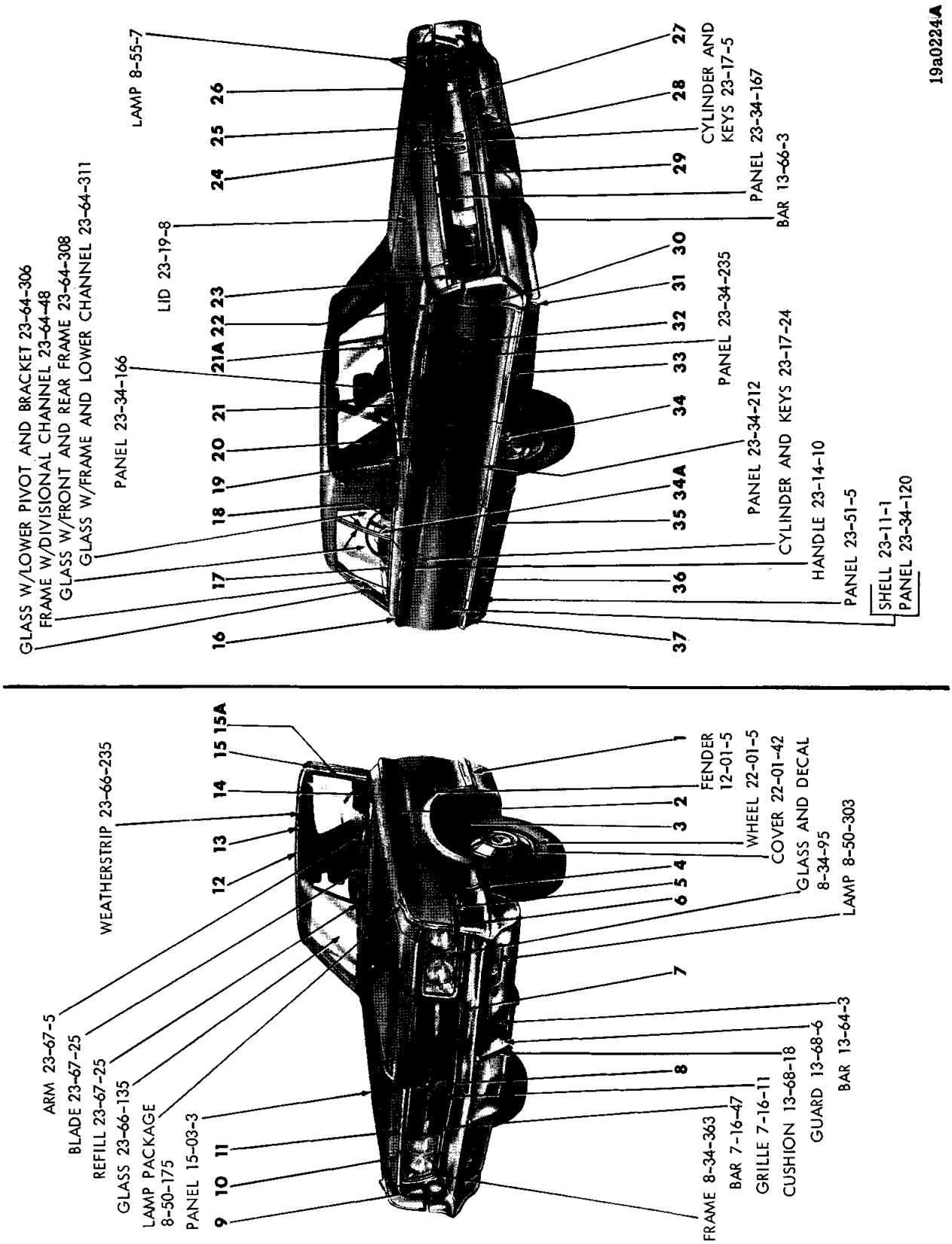

EXTERIOR VIEW - CHRYSLER C-M CONVERTIBLE COUPE

MyMopar.com

REF. NO.	QTY	PART NUMBER	DESCRIPTION
1	1	2584 114-5	MOULDING PACKAGE, Fender Side Lower (12-15-2)
	4	6024 731	Washer
	2	---- ---	Nut
	2	---- ---	Nut
2	1	2584 120-1	MOULDING PACKAGE, Fender Peak Rear (12-15-2)
	8	6001 667	Clip
	6	6001 753	Retainer
	6	6025 140	Nut
3	1	2524 786-7	MOULDING PACKAGE, Fender Wheel Opening (12-15-2)
	12	6024 271	Screw
4	1	2584 116-7	MOULDING PACKAGE, Front Bumper Fender (12-15-2)
	6	---- ---	Nut
5	1	2584 124-5	MOULDING PACKAGE, Fender Front Extension (12-15-2)
	4	6024 349	Screw
	4	6023 164	Nut
6	1	2584 118-9	MOULDING PACKAGE, Fender Peak Front (12-15-2)
	4	6001 753	Retainer
	4	6025 140	Nut
7	1	2524 084-5	FRAME, Radiator Grille (7-16-36)
8	1	2524 268	MEDALLION, Radiator Grille (7-17-1)
9	1	2584 112-3	MOULDING PACKAGE, Fender Front (12-15-2)
	2	6025 148	Screw
	4	---- ---	Nut
10	1	2524 258	MOULDING PACKAGE, Hood Front (15-25-2)
	11	6024 895	Screw
11	1	2524 270	LETTER, Hood Front Name, "C" (15-06-16)
	1	2524 271	"H"
	2	2524 272	"R"
	1	2524 273	"Y"
	1	2524 274	"S"
	1	2524 275	"L"
	1	2524 276	"E"
	8	1839 995	Nut
12	1	2584 099	MOULDING PACKAGE, Windshield Outside Upper (23-23-65)
	8	6001 648	Retainer
13	1	2484 602-3	MOULDING, Windshield Outside Upper Header (23-23-65)
	5	6025 132	Screw
14	1	2584 110-1	MOULDING PACKAGE, Windshield Outside Lower (23-23-65)
	10	6001 697	Retainer
15	1	2481 844-5	MOULDING, Body Front Upper Pillar Outside (23-23-14)
	8	9415 214	Screw
	1	2528 662-3	EXTENSION, Frt. Plr. Outside Mldg. Lwr. (23-23-14)
	4	9418 246	Screw
15A	1	2584 106-7	MOULDING PACKAGE, Windshield Outside Side (23-23-65)
	8	6001 648	Retainer
16	1	2584 234-5	MOULDING PACKAGE, Door Outside Upper (23-23-32)
	8	6001 667	Retainer
	2	---- ---	Retainer 2 9417 621 Nut
17	1	2584 214-5	MOULDING PACKAGE, Door Outside Belt (23-23-32)
	16	6001 496	Retainer
18	1	2584 220-1	MOULDING PACKAGE, Quarter Outside Belt (23-23-39)
	6	6001 496	Retainer
	2	---- ---	Screw
19	1	2584 088-9	MOULDING PACKAGE, Quarter Outside Panel Belt Rear (23-23-39)
	2	2094 380	Fastener
	2	---- ---	Screw
20	1	2584 254-5	MOULDING PACKAGE, Quarter Outside Upper Front (23-23-39)
	18	6001 667	Retainer
	8	6001 753	Retainer
	8	6025 140	Nut
21	1	2584 082-3	MOULDING PACKAGE, Deck Opening Upper Panel (23-23-31)
	20	2094 380	Fastener
21A	1	2584 081	CAP PACKAGE, Deck Opening Upper Panel Moulding (23-23-41)
	1	2094 380	Fastener
22	1	2584 206-7	MOULDING PACKAGE, Quarter Outside Upper Rear (23-23-39)
	2	6024 637	Screw
	2	---- ---	Nut
23	1	2584 286-7	MOULDING PACKAGE, Quarter Outside Rear (23-23-39)
	2	6024 403	Screw
	2	---- ---	Nut
24	1	2528 858	NUMERAL "3", Deck Opening Lower Panel Fuel Filler Door (23-34-184)
	2	2528 859	"0"
	6	6023 260	Nut
25	1	2584 184	MOULDING PACKAGE, Deck Lid Lower, Chrysler (23-23-30)
	8	6001 652	Retainer
	8	9417 621	Nut
26	1	2584 182	MOULDING PACKAGE, Deck Opening Lower Panel Upper (23-23-23)
	4	6001 779	Clip
	2	---- ---	Nut
27	1	2584 186-7	MOULDING PACKAGE, Deck Opening Lower Panel Lower (23-23-23)
	6	6001 778	Clip
28	1	2526 512	MOULDING, Deck Opening Lower Panel Fuel Filler Door (23-23-23)
	2	9413 268	Screw
29	1	2526 514-5	PANEL, Deck Opening Lower Finish (23-23-28)
	4	6024 564	Screw
30	1	2526 458-9	MOULDING, Quarter Panel Bumper Opening (23-23-39)
	6	6024 373	Screw
31	1	2527 984-5	MOULDING, Quarter Panel Rear Lower (23-23-39)
	4	6024 409	Screw

All Packages Include Attaching Parts

Part Type Code is Indicated in Parentheses

CONTINUED ON NEXT PAGE

EXTERIOR VIEW - CHRYSLER C-M CONVERTIBLE COUPE

MyMopar.com

REF. NO.	QTY	PART NUMBER	DESCRIPTION
32	1	2528 092-3	MEDALLION, Quarter Outside (23-34-334)
	8	6023 260	Nut
33	1	2584 260-1	MOULDING PACKAGE, Quarter Panel Lower Rear (23-23-39)
	8	6001 821	Clip
	8	---- ---	Sealer
	8	6006 438	Nut
	2	6001 819	Clip
34	1	2584 264-5	MOULDING PACKAGE, Quarter Outside Wheel Opening Panel (23-23-39)
	8	6001 821	Clip
	8	---- ---	Sealer
	8	6006 438	Nut

REF. NO.	QTY	PART NUMBER	DESCRIPTION
34A	1	2529 096-7	MOULDING, Quarter Window Glass Front (23-23-73)
35	1	2584 262-3	MOULDING PACKAGE, Quarter Panel Lower Front (23-23-39)
	8	6001 819	Clip
36	1	2584 242-3	MOULDING PACKAGE, Door Outside Lower Rear (23-23-32)
	2	---- ---	Clip - Right
	2	6001 829	Clip - Left
	2	9417 621	Nut
37	1	2584 240-1	MOULDING PACKAGE, Door Outside Lower Front (23-23-32)
	2	---- ---	Nut
	4	6001 819	Clip
	4	---- ---	Nut

All Packages Include Attaching Parts

Part Type Code is Indicated in Parentheses

EXTERIOR VIEW - CHRYSLER C-M CONVERTIBLE COUPE

MyMopar.com

CODE	PART NAME AND DESCRIPTION	CYL	PER CAR	VALIANT / DART	PLYMOUTH BELVEDERE / DODGE CORONET	PLYMOUTH FURY / DODGE POLARA / CHRYSLER	IMPERIAL

NOTES

TYPE LETTERS Indicate:

V - Valiant	R - Belvedere	P - Plymouth	C - Chrysler
L - Dart	W - Coronet	D - Dodge	Y - Imperial

★Indicates use as required.

⊟Indicates parts not listed in any previous parts book.

Printed in U.S.A.

Prices and specifications subject to change without notice.

MyMopar.com

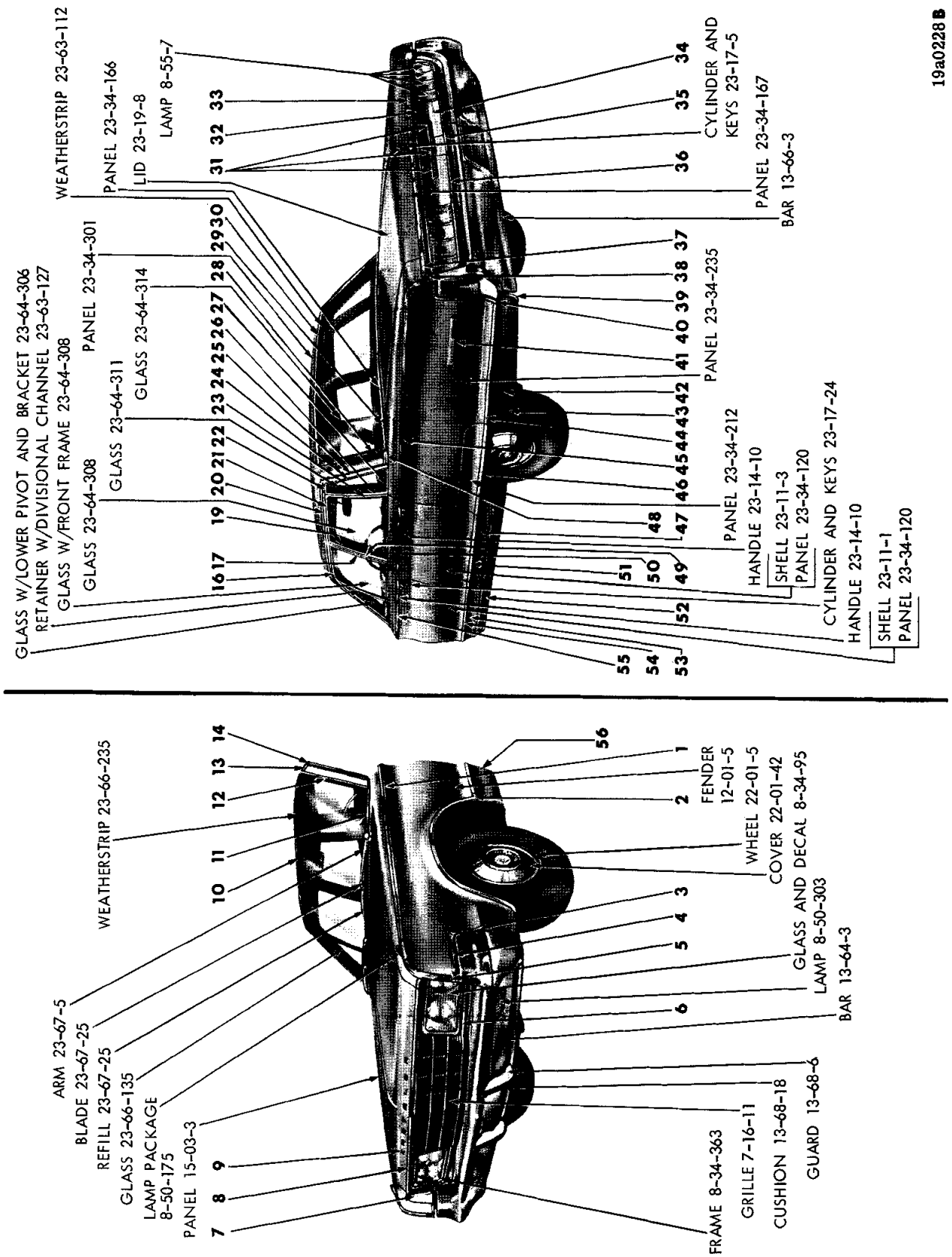

EXTERIOR VIEW - CHRYSLER C-H 4 DOOR SEDAN (6 WINDOW)

MyMopar.com

REF. NO.	QTY	PART NUMBER	DESCRIPTION
1	1	2584 120-1	MOULDING PACKAGE, Fender Peak, Rear (12-15-2)
	8	6001 667	Clip
	6	6001 753	Retainer
	6	6025 140	Nut
2	1	2524 286-7	MOULDING, Fender Wheel Opening (12-15-2)
	14	6024 271	Screw
3	1	2584 116-7	MOULDING PACKAGE, Front Bumper Fender (12-15-2)
	6	---- ---	Nut
4	1	2584 124-5	MOULDING PACKAGE, Fender Front Extension (12-15-2)
	4	6024 349	Screw
	4	6023 164	Nut
5	1	2584 118-9	MOULDING PACKAGE, Fender Peak, Front (12-15-2)
	4	6001 753	Retainer
	4	6025 140	Nut
6	1	2524 084-5	FRAME, Radiator Grille (7-16-36)
7	1	2584 112-3	MOULDING PACKAGE, Fender Front (12-15-2)
	4	---- ---	Nut
	2	6025 148	Screw
8	1	2524 258	MOULDING, Hood Front (15-25-2)
	11	6024 895	Screw
9	1	2524 270	LETTER "C", Hood Front Name (15-06-16)
	1	2524 271	"H"
	2	2524 272	"R"
	1	2524 273	"Y"
	1	2524 274	"S"
	1	2524 275	"L"
	1	2524 276	"E"
	8	1839 995	Nut
10	1	2584 104	MOULDING PACKAGE, Windshield Outside Upper (23-23-65)
	8	6001 648	Retainer
11	1	2584 110-1	MOULDING PACKAGE, Windshield Outside Lower (23-23-65)
	10	6001 697	Retainer
12	1	2584 108-9	MOULDING PACKAGE, Windshield Outside Side (23-23-65)
	8	6001 648	Retainer
13	1	2529 444-5	MOULDING, Body Front Pillar Trim (Spec. Equip.)(23-23-14)
	2	6023 682	Screw
14	1	2529 264-5	MOULDING, Body Front Pillar Drain Trough (w/o Vinyl Roof) (23-59-61)
	1	2605 018-9	MOULDING, Body Front Pillar Drain Trough (w/Vinyl Roof) (23-59-61)
16	1	2492 782-3	MOULDING, Front Door Window Opening Frame Upper (23-23-32)
17	1	2492 784-5	MOULDING, Front Door Window Opening Frame Rear (23-23-32)
19	1	2492 796-7	MOULDING, Rear Door Window Opening Frame Front (23-23-33)
20	1	2573 944-5	MOULDING, Roof Side Drain Trough Front (w/o Vinyl Roof) (23-59-61)
	1	2605 016-7	MOULDING, Roof Side Drain Trough Front (w/Vinyl Roof) (23-59-61)
21	1	2492 798-9	MOULDING, Rear Door Window Opening Frame Upper (23-23-33)

All Packages Include Attaching Parts

REF. NO.	QTY	PART NUMBER	DESCRIPTION
22	1	2584 200-1	MOULDING PACKAGE, Quarter Window Outside Upper (23-23-73)
	6	6024 659	Screw
	2	2527 816	Clip and Seal
23	1	2492 800-1	MOULDING, Rear Door Window Opening Frame Rear (23-23-33)
24	1	2584 202-3	MOULDING and STUD PACKAGE, Quarter Window Outside Rear (23-23-73)
	6	116 000	Nut and Washer
25	1	2573 946-7	MOULDING, Roof Side Drain Trough Rear (w/o Vinyl Roof) (23-59-61)
	1	2605 020-1	MOULDING, Roof Side Drain Trough Rear (w/Vinyl Roof) (23-59-61)
26	1	2484 558-9	MOULDING, Quarter Window Outside Front (23-23-73)
	6	6023 247	Screw
27	1	2584 216-7	MOULDING PACKAGE, Quarter Outside Belt (23-23-39)
	6	6001 496	Retainer
28	1	2584 100-1	MOULDING PACKAGE, Rear Window Outside Side (23-23-52)
	6	6001 648	Retainer and Screw
29	1	2584 098	MOULDING PACKAGE, Rear Window Outside Lower (23-23-52)
	8	6001 648	Retainer and Screw
30	1	2584 102-3	MOULDING PACKAGE, Rear Window Outside Upper (23-23-52)
	8	6001 648	Retainer and Screw
31	2	2528 514	MEDALLION and BASE, Deck Opening Lower Fuel Filler Door (23-34-184)
	1	2528 512-3	MEDALLION and BASE, Deck Opening Lower (23-34-184)
	6	2166 363	Washer
	2	6023 685	Nut
32	1	2584 182	MOULDING PACKAGE, Deck Opening Lower Panel Upper (23-23-23)
	4	6001 779	Clip
	2	---- ---	Nut
33	1	2584 184	MOULDING PACKAGE, Deck Lid Lower, Chrysler (23-23-30)
	8	6001 652	Retainer
	8	9417 621	Nut
34	1	2526 514-5	PANEL, Deck Opening Lower Finish (23-23-28)
	4	6001 779	Clip
	6	6001 778	Clip
35	1	2526 512	MOULDING, Deck Opening Lower Panel Fuel Filler Door (23-23-23)
	2	9413 268	Screw
36	1	2584 186-7	MOULDING PACKAGE, Deck Opening Lower Panel Lower (23-23-23)
	6	6001 778	Clip
37	1	2584 286-7	MOULDING PACKAGE, Quarter Panel Rear (23-23-39)
	2	6024 403	Screw
	2	---- ---	Nut

Part Type Code is Indicated in Parentheses

CONTINUED ON NEXT PAGE

EXTERIOR VIEW - CHRYSLER C-H 4 DOOR SEDAN (6 WINDOW)

MyMopar.com

REF. NO.	QTY	PART NUMBER	DESCRIPTION
38	1	2584 206-7	MOULDING PACKAGE, Quarter Panel Upper Rear (23-23-39)
	2	6024 637	Screw
	2	---- ---	Nut
39	1	2527 984-5	MOULDING, Quarter Panel Rear Lower (23-23-39)
	4	6024 409	Screw
40	1	2526 458-9	MOULDING, Quarter Panel Bumper Opening (23-23-39)
	6	6024 373	Screw
41	2	2528 477	BASE and NAME PLATE, Quarter Outside, New Yorker (23-34-238)
	4	---- ---	Nut
	4	6000 960	Clip
42	1	2526 450-1	PANEL, Quarter Panel Finish Rear (Spec. Equip.)(23-23-85)
43	1	2526 446-7	PANEL, Quarter Outside Wheel Opening Finish (Spec. Equip.) (23-23-85)
44	1	2584 276-7	MOULDING PACKAGE, Quarter Panel Lower Rear (23-23-39)
	2	6024 637	Screw
	6	6001 838	Retainer
	6	6001 752	Retainer
	4	6001 802	Retainer
45	1	2584 284-5	MOULDING PACKAGE, Quarter Panel Upper Front (23-23-39)
	10	6001 667	Retainer
	8	6001 753	Retainer
	8	6025 140	Nut
46	1	2584 274-5	MOULDING PACKAGE, Quarter Panel Outside Wheel Opening (23-23-39)
	4	6024 271	Screw
	8	116 000	Nut
	8	6001 752	Clip
47	1	2526 456-7	PANEL, Rear Door Outside Finish (Spec. Equip.) (23-23-80)
48	1	2584 192-3	MOULDING PACKAGE, Roof Side Extension Belt (23-23-42)
	2	6001 767	Retainer and Seal
	1	2584 528-9	MOULDING PACKAGE, Roof Side Extension Belt (Chrome) (23-23-42)
	2	6001 767	Retainer and Screw
49	1	2570 110-1	PANEL, Body Center Pillar Outside Finish Upper (23-23-16)
	4	6023 247	Screw
50	1	2584 252-3	MOULDING PACKAGE, Rear Door Outside Upper (23-23-33)
	2	---- ---	Retainer
	2	9417 621	Nut
	6	6001 667	Retainer
51	1	2584 270-1	MOULDING PACKAGE, Rear Door Outside Lower (23-23-33)
	4	---- ---	Screw
	2	9417 621	Nut
	2	6001 769	Clip
	10	---- ---	Clip
52	2	2584 105	MOULDING PACKAGE, Body Side Sill Outside (Spec. Equip.) (23-23-2)
	18	6024 271	Screw
	18	6001 786	Clip
53	1	2526 452-3	PANEL, Front Door Outside Finish (Spec. Equip.) (23-23-80)
54	1	2584 268-9	MOULDING PACKAGE, Front Door Outside Lower (23-23-32)
	8	6024 271	Screw
	4	9417 621	Nut
	4	6001 769	Clip
	6	---- ---	Clip
55	1	2584 236-7	MOULDING PACKAGE, Front Door Outside Upper (23-23-32)
	2	---- ---	Retainer
	2	9417 621	Nut
	6	6001 667	Retainer
56	1	2524 884	PANEL, Fender Side Lower Finish, w/Medallion, Right (12-15-2)
	7	6024 271	Screw
	2	6001 752	Retainer and Seal
	2	---- ---	Nut
	1	6001 849	Clip
	1	2524 293	PANEL, Fender Side Lower Finish, Left (12-15-2)
	7	6024 271	Screw
	2	6001 752	Retainer and Seal
	2	---- ---	Nut
	1	6001 849	Clip

All Packages Include Attaching Parts

Part Type Code is Indicated in Parentheses

EXTERIOR VIEW - CHRYSLER C-H 4 DOOR SEDAN (6 WINDOW)

MyMopar.com

CODE	PART NAME AND DESCRIPTION	CYL	PER CAR	VALIANT / DART	PLYMOUTH BELVEDERE / DODGE CORONET	PLYMOUTH FURY / DODGE POLARA / CHRYSLER	IMPERIAL

NOTES

TYPE LETTERS Indicate: V - Valiant, L - Dart, R - Belvedere, W - Coronet, P - Plymouth, D - Dodge, C - Chrysler, Y - Imperial

★Indicates use as required.

⊟Indicates parts not listed in any previous parts book.

Printed in U.S.A.

Prices and specifications subject to change without notice.

MyMopar.com

May, 1965 Supersedes Nov. 30, 1964.

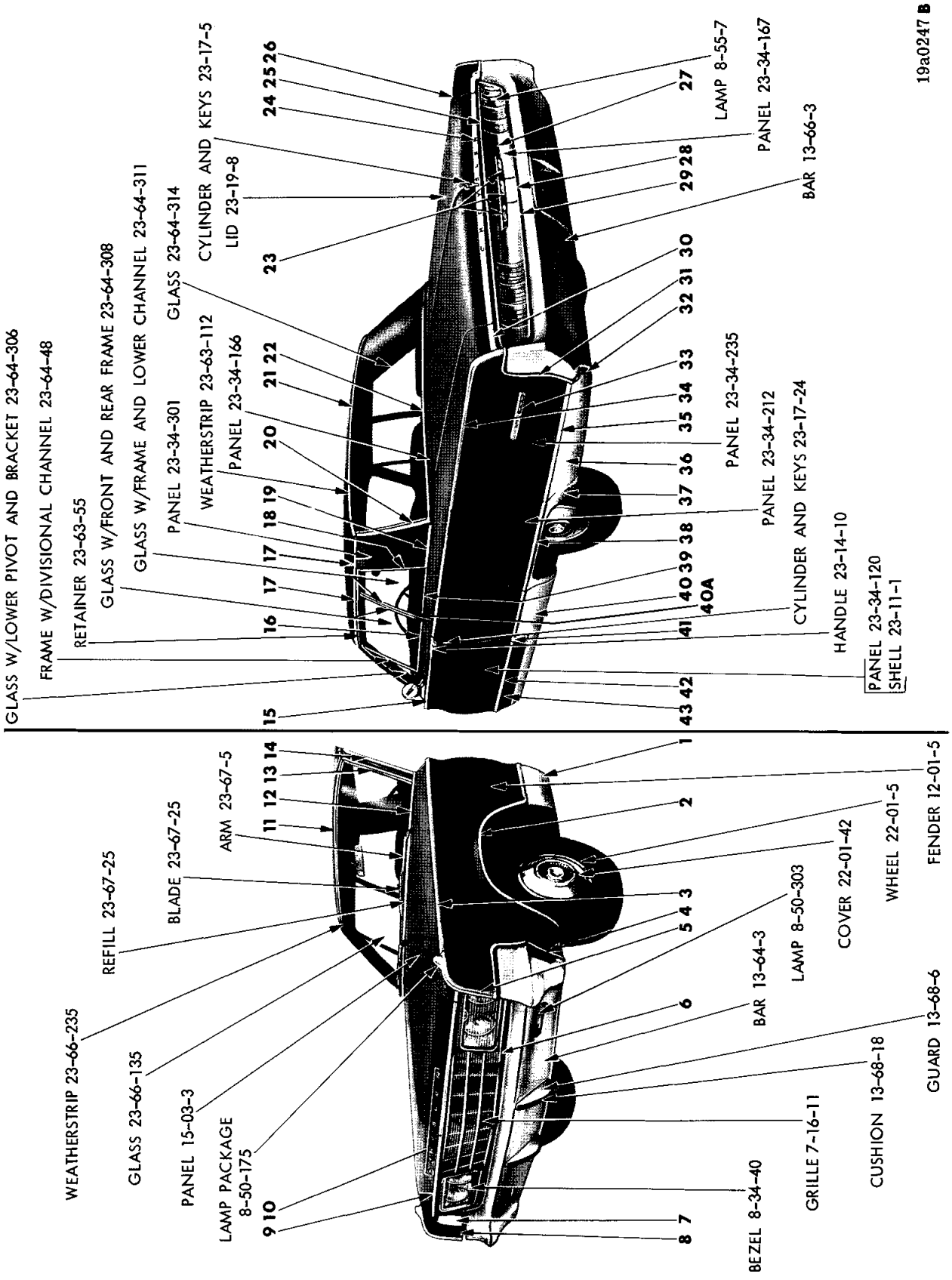

EXTERIOR VIEW - CHRYSLER C-H 2 DOOR HARDTOP

MyMopar.com

REF. NO.	QTY	PART NUMBER	DESCRIPTION
1	1	2524 884	PANEL, Fender Side Lower Finish, w/Medallion, Right (12-15-2)
	7	6024 271	Screw
	2	6001 752	Retainer and Seal
	2	---- ---	Nut
	1	6001 849	Clip
	1	2524 293	PANEL, Fender Side Lower Finish, Left (12-15-2)
	7	6024 271	Screw
	2	6001 752	Retainer and Seal
	2	---- ---	Nut
	1	6001 849	Clip
2	1	2524 286-7	MOULDING, Fender Wheel Opening (12-15-2)
	14	6024 271	Screw
3	1	2584 120-1	MOULDING PACKAGE, Fender Peak Rear, w/Turn Signal Indicator (12-15-2)
	8	6001 667	Clip
	6	6001 753	Retainer
	6	6025 140	Nut
4	1	2584 116-7	MOULDING PACKAGE, Front Bumper Fender (12-15-2)
	6	---- ---	Nut
5	1	2584 118-9	MOULDING PACKAGE, Fender Peak Front (12-15-2)
	4	6001 753	Retainer
	4	6025 140	Nut
6	1	2524 084-5	FRAME, Radiator Grille (7-16-36)
7	1	2584 112-3	MOULDING PACKAGE, Fender Front (12-15-2)
	4	---- ---	Nut
	2	6025 148	Screw
8	1	2584 124-5	MOULDING PACKAGE, Fender Front Extension (12-15-2)
	4	6024 349	Screw
	4	6023 164	Nut
9	1	2524 258	MOULDING, Hood Front (15-25-2)
	11	6024 895	Screw
10	1	2524 270	LETTER, Hood Front Name, "C" (15-06-16)
	1	2524 271	"H"
	1	2524 272	"R"
	1	2524 273	"Y"
	1	2524 274	"S"
	1	2524 275	"L"
	1	2524 276	"E"
	1	2524 277	"R"
	8	1839 995	Nut, w/Seal
11	1	2584 099	MOULDING PACKAGE, Windshield Outside Upper (23-23-65)
	8	6001 648	Retainer
12	1	2584 110-1	MOULDING PACKAGE, Windshield Outside Lower (23-23-65)
	10	6001 697	Retainer
13	1	2584 106-7	MOULDING PACKAGE, Windshield Outside Side (23-23-65)
	8	6001 648	Retainer
14	1	2528 002-3	MOULDING, Body Front Pillar Drain Trough (Lgh. approx. 22") (23-59-61)
	8	9415 214	Washer
	1	2807 364-5	MOULDING PACKAGE, Body Front Pillar Drain Trough (Lgh. approx. 27")(23-59-61)
	6	6023 370	Screw
15	1	2584 234-5	MOULDING PACKAGE, Door Outside Upper (23-23-32)
	2	9417 621	Nut
	8	6001 667	Retainer
	2	---- ---	Retainer
16	1	2584 214-5	MOULDING PACKAGE, Door Outside Belt (23-23-32)
	16	6001 496	Retainer
	2	---- ---	Retainer
17	1	2573 222-3	MOULDING, Roof Side Drain Trough Front and Rear, (Lgh. approx. 55")(23-59-61) (Note #1)
	14	9415 214	Screw
	8	6024 271	Screw
	★	6001 814	Retainer
	★	6001 815	Retainer
	1	2603 948-9	MOULDING, Roof Side Drain Trough Front and Rear, (Lgh. approx. 55")(23-59-61) (Note #2)
	2	6001 815	Retainer
	8	6024 271	Washer
	14	9415 214	Retainer
	6	6023 370	Screw
	1	2807 368-9	MOULDING PACKAGE, Roof Side Drain Trough, Front and Rear (Lgh. approx. 60") (23-59-61)
	20	6024 271	Screw
	2	6001 815	Retainer
	2	6002 063	Retainer
18	1	2526 854-5	MOULDING, Roof Panel Extension Front (23-23-42)
	4	9414 742	Screw
19	1	2584 494-5	MOULDING PACKAGE, Roof Outside Extension Belt (23-23-42)
	6	6022 077	Washer
	6	9411 618	Nut
20	1	2525 592-3	MOULDING PACKAGE, Rear Window Outside Side (23-23-52)
	6	6001 648	Retainer
21	1	2525 598-9	MOULDING PACKAGE, Rear Window Outside Upper (23-23-52)
	8	6001 648	Retainer
	1	2807 140-1	MOULDING PACKAGE, Rear Window Outside Upper and Side (23-23-52) (Note #4)
22	1	2525 594	MOULDING PACKAGE, Rear Window Outside Lower (23-23-52) (Note #3)
	8	6001 648	Retainer
	1	2807 138-9	MOULDING PACKAGE, Rear Window Outside Lower (23-23-52) (Note #4)

NOTE 1: UP TO SERIAL NO. 116783
NOTE 2: AFTER SERIAL NO. 116783
NOTE 3: UP TO SERIAL NO. 195358
NOTE 4: AFTER SERIAL NO. 195358

CONTINUED ON NEXT PAGE

All Packages Include Attaching Parts

Part Type Code is Indicated in Parentheses

EXTERIOR VIEW - CHRYSLER C-H 2 DOOR HARDTOP

MyMopar.com

REF. NO.	QTY	PART NUMBER	DESCRIPTION
23	1	2528 512-3	MEDALLION and BASE, Deck Opening Lower (23-34-184)
	1	2528 514	MEDALLION and BASE, Deck Opening Lower Fuel Filler Door (23-34-184)
	6	2166 363	Washer
	2	6023 685	Nut
24	1	2584 184	MOULDING PACKAGE, Deck Lid Lower, Chrysler (23-23-30)
	8	6001 652	Retainer
	8	9417 621	Nut
25	1	2584 182	MOULDING PACKAGE, Deck Opening Lower Panel Upper (23-23-23)
	4	6001 779	Clip
	2	---- ---	Nut
26	1	2584 206-7	MOULDING PACKAGE, Quarter Panel Upper Rear (23-23-39)
	2	6024 637	Screw
	2	---- ---	Nut
27	1	2526 514-5	PANEL PACKAGE, Deck Opening Lower Finish (23-23-28)
	4	6001 779	Clip
	6	6001 778	Clip
28	1	2526 512	MOULDING, Deck Opening Lower Panel Fuel Filler Door (23-23-23)
	2	9413 268	Screw
29	1	2584 186-7	MOULDING PACKAGE, Deck Opening Lower Panel Lower (23-23-23)
	6	6001 778	Clip
30	1	2584 286-7	MOULDING PACKAGE, Quarter Panel Rear (23-23-39)
	2	6024 403	Screw
	2	---- ---	Nut
31	1	2526 458-9	MOULDING, Quarter Panel Bumper Opening (23-23-39)
	6	6024 373	Screw
32	1	2527 984-5	MOULDING, Quarter Panel Rear Lower (23-23-39)
	4	6024 409	Screw
33	2	2428 477	BASE and NAME PLATE, Quarter Outside, New Yorker (23-34-238)
	4	6000 960	Clip
34	1	2584 254-5	MOULDING PACKAGE, Quarter Panel Upper Front (23-23-39)
	18	6001 667	Retainer
	8	6001 753	Retainer
	8	6025 140	Nut
35	1	2584 276-7	MOULDING PACKAGE, Quarter Panel Lower Rear (23-23-39)
	2	6024 637	Screw
	6	6001 838	Retainer
	6	6001 752	Retainer
	4	6001 802	Retainer
36	1	2526 450-1	PANEL, Quarter Outside Finish Rear (23-23-85)
37	1	2526 446-7	PANEL, Quarter Outside Wheel Opening Finish (23-23-85)
38	1	2584 274-5	MOULDING PACKAGE, Quarter Panel Outside Wheel Opening (23-23-39)
	4	6024 271	Screw
	8	116 000	Nut
	8	6001 752	Clip
39	1	2584 222-3	MOULDING PACKAGE, Quarter Panel Belt (23-23-39)
	10	6001 496	Retainer
	2	---- ---	Retainer
40	1	2584 280-1	MOULDING PACKAGE, Body Side Sill Outside (23-23-2)
	34	6023 248	Screw
	12	6001 786	Clip
40A	1	2782 876-7	MOULDING and RETAINER, Quarter Window Front Frame (23-23-73) (23-63-105)
41	1	2584 272-3	MOULDING PACKAGE, Quarter Panel Lower Front (23-23-39
	10	6024 271	Screw
	8	6001 656	Clip
42	1	2584 266-7	MOULDING PACKAGE, Door Outside Lower (23-23-32)
	10	6024 271	Screw
	2	9417 621	Nut
	2	6001 769	Clip
	10	6001 753	Clip
43	1	2526 454-5	PANEL, Door Outside Finish (23-23-80)

All Packages Include Attaching Parts

Part Type Code is Indicated in Parentheses

EXTERIOR VIEW - CHRYSLER C-H 2 DOOR HARDTOP

MyMopar.com

CODE	PART NAME AND DESCRIPTION	PER CAR	VALIANT	PLYMOUTH BELVEDERE	PLYMOUTH FURY	IMPERIAL
			DART	DODGE CORONET	DODGE POLARA	
					CHRYSLER	

NOTES

TYPE LETTERS Indicate: V - Valiant, L - Dart, R - Belvedere, W - Coronet, P - Plymouth, D - Dodge, C - Chrysler, Y - Imperial

★Indicates use as required.
⊟Indicates parts not listed in any previous parts book.

MyMopar.com

Printed in U.S.A.
Prices and specifications subject to change without notice.

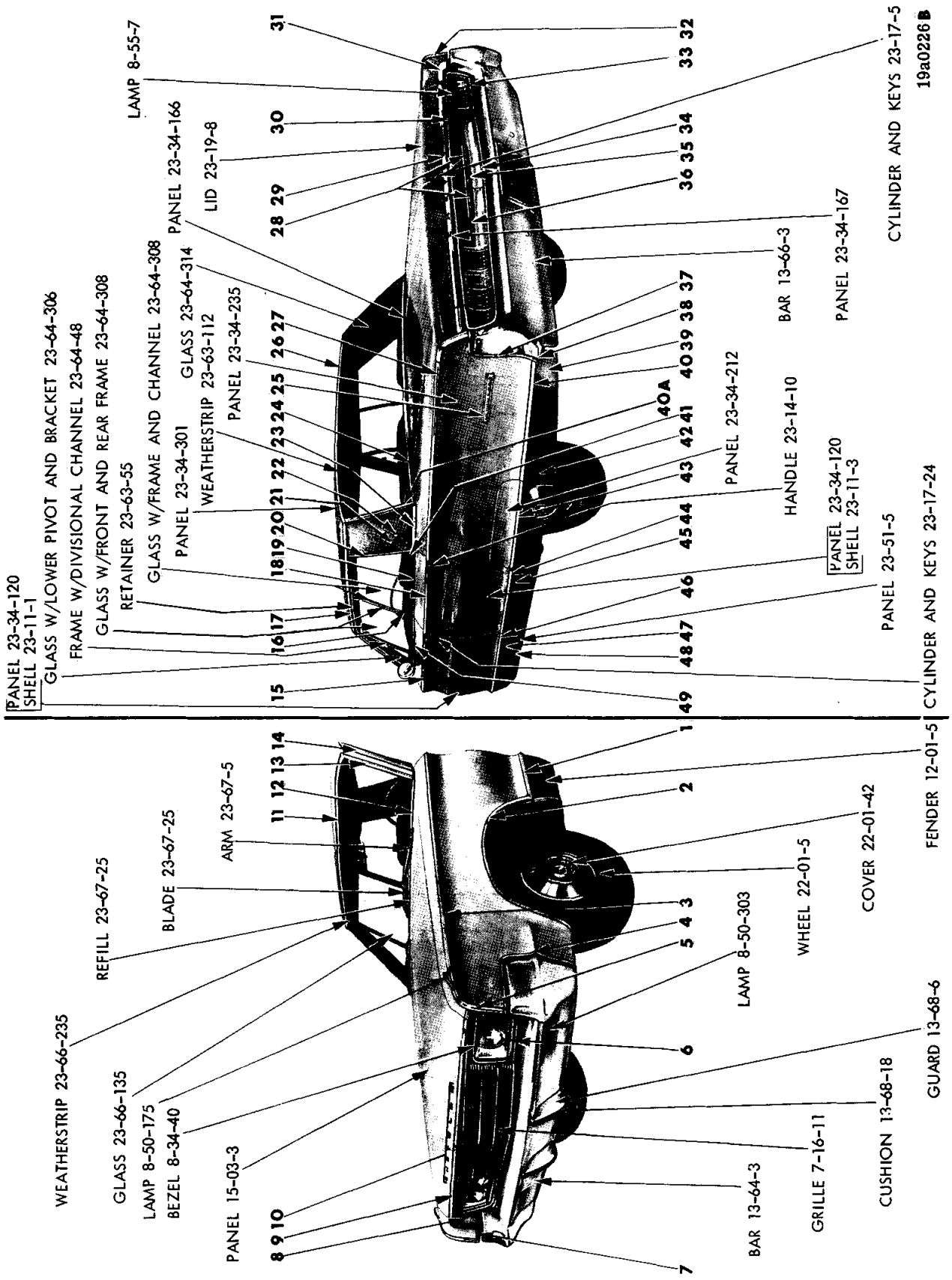

EXTERIOR VIEW - CHRYSLER C-H 4 DOOR HARDTOP

MyMopar.com

REF. NO.	QTY	PART NUMBER	DESCRIPTION
1	1	2524 884	PANEL, Fender Side Lower Finish, Right (12-15-2)
	1	2524 293	PANEL, Fender Side Lower Finish, Left (12-15-2)
	14	6024 271	Screw
	4	6001 752	Retainer
	2	6001 849	Clip
	4	---- ---	Nut
2	1	2524 286-7	MOULDING, Fender Wheel Opening (12-15-2)
	14	6024 271	Screw
3	1	2584 120-1	MOULDING PACKAGE, Fender Peak Rear (12-15-2)
	8	6001 667	Clip
	6	6001 753	Retainer
	6	6025 140	Nut
4	1	2584 116-7	MOULDING PACKAGE, Front Bumper Fender (12-15-2)
	6	---- ---	Nut
5	1	2584 118-9	MOULDING PACKAGE, Fender Peak Front (12-15-2)
	4	6001 753	Retainer
	4	6025 140	Nut
6	1	2524 084-5	FRAME, Radiator Grille (7-16-36)
7	1	2584 124-5	MOULDING PACKAGE, Fender Front Extension (12-15-2)
	4	6024 349	Screw
	4	6023 164	Nut
8	1	2584 112-3	MOULDING PACKAGE, Fender Front (12-15-2)
	2	6025 148	Screw
	4	---- ---	Nut
9	1	2524 258	MOULDING, Hood Front (15-25-2)
	11	6024 895	Screw
10	1	2524 270	LETTER, Hood Front Name, "C" (15-06-16)
	1	2524 271	"H"
	2	2524 272	"R"
	1	2524 273	"Y"
	1	2524 274	"S"
	1	2524 275	"L"
	1	2524 276	"E"
11	1	2584 099	MOULDING PACKAGE, Windshield Outside Upper (23-23-65)
	8	6001 648	Retainer
12	1	2584 110-1	MOULDING PACKAGE, Windshield Outside Lower (23-23-65)
	10	6001 697	Retainer
13	1	2584 106-7	MOULDING PACKAGE, Windshield Outside Side (23-23-65)
	8	6001 648	Retainer
14	1	2528 002-3	MOULDING, Body Front Pillar Drain Trough, (Lgh. approx. 22") (23-59-61)
	1	2807 364-5	MOULDING PACKAGE, Body Frt. Plr. Drain Trough (Lgh. approx. 27") (23-59-61)
	6	6023 370	Screw
15	1	2584 236-7	MOULDING PACKAGE, Front Door Outside Upr. (23-23-32)
	2	---- ---	Retainer
	6	6001 667	Retainer 2 9417 621 Nut
16	1	2664 678-9	MOULDING w/Weatherstrip Retainer, Rr. Dr. Wdo. Glass Frame Frt. (23-23-33) (23-63-105)
	10	6024 997	Screw
17	1	2573 222-3	MOULDING, Roof Side Drain, (Lgh. approx. 55")(23-59-61) (Note #1)
	1	2603 948-9	MOULDING, Roof Side Drain, (Lgh. approx. 55")(23-59-61) (Note #2)
	2	6001 815	Retainer
	14	9415 214	Retainer 8 6024 271 Washer
	1	2807 368-9	MOULDING PACKAGE, Roof Side Drain Trough Frt. & Rr. (Lgh. approx. 60")(23-59-61)
	2	6001 815	Retainer
	2	6002 063	Retainer 20 6024 271 Screw
18	1	2584 252-3	MOULDING PACKAGE, Rear Door Outside Upr. (23-23-33)
	2	---- ---	Retainer
	6	6001 657	Retainer 2 9417 621 Nut
19	1	2584 248-9	MOULDING PACKAGE, Rear Door Outside Belt (23-23-33)
	2	---- ---	Retainer 10 6001 797 Clip
20	1	2526 854-5	MOULDING, Roof Panel Extension Front (23-23-42)
	4	9414 742	Screw
21			NAME PLATE (see Part Type Cod 23-82-20 in Trim Section of Catalog)
22	2	2581 948	BASE and MEDALLION, Roof Outside Quarter (23-34-340)
	2	---- ---	Retainer (23-34-347)
23	1	2584 494-5	MOULDING PACKAGE, Roof Outside Ext. Belt (23-23-42)
	6	9411 618	Nut
	6	6022 077	Washer
24	1	2525 594	MOULDING PACKAGE, Rear Window Outside Lower (23-23-52)
	8	6001 648	Retainer and Screw
25	2	2528 477	BASE and NAME PLATE, Quarter Outside, New Yorker (23-34-238)
	4	---- ---	Nut
	4	6000 960	Clip
26	1	2525 598-9	MOULDING PACKAGE, Rear Window Outside Upper (23-23-52)
	8	6001 648	Retainer and Screw
27	1	2584 284-5	MOULDING PACKAGE, Quarter Outside Upper Front (23-23-39)
	10	6001 657	Retainer
	8	6001 753	Retainer
	8	6025 140	Nut
28	1	2528 514	MEDALLION and BASE, Deck Opening Fuel Filler Door (23-34-184)
	6	2166 363	Washer
	2	6023 685	Nut
29	1	2584 184	MOULDING PACKAGE, Deck Lid Lower, Chrysler (23-23-30)
	8	6001 652	Retainer
	8	9417 621	Nut
30	1	2584 182	MOULDING PACKAGE, Deck Opening Lower Panel Upper (23-23-23)
	4	6001 779	Clip
	2	---- ---	Nut

NOTE 1: UP TO SERIAL NO. 116783
NOTE 2: AFTER SERIAL NO. 116783

CONTINUED ON NEXT PAGE

All Packages Include Attaching Parts

Part Type Code is Indicated in Parentheses

EXTERIOR VIEW - CHRYSLER C-H 4 DOOR HARDTOP

MyMopar.com

REF. NO.	QTY	PART NUMBER	DESCRIPTION
31	1	2584 286-7	MOULDING PACKAGE, Quarter Panel Rear (23-23-39)
	2	6024 403	Screw
	2	---- ---	Nut
32	1	2584 206-7	MOULDING, PACKAGE, Quarter Panel Upper Rear (23-23-39)
	2	6024 637	Screw
	2	---- ---	Nut
33	1	2584 186-7	MOULDING PACKAGE, Deck Opening Lower Panel Lower (23-23-23)
	6	6001 778	Clip
34	1	2526 512	MOULDING, Deck Opening Lower Panel Fuel Filler Door (23-23-23)
	2	9413 268	Screw
35	1	2528 512-3	MEDALLION and BASE, Deck Opening Lower (23-34-184)
	6	2166 363	Washer
	2	6023 685	Nut
36	1	2526 514-5	PANEL, Deck Opening Lower Finish (23-23-28)
	4	6001 779	Clip
	6	6001 778	Clip
37	1	2526 458-9	MOULDING, Quarter Panel Bumper Opening (23-23-39)
	6	6024 373	Screw
38	1	2527 984-5	MOULDING, Quarter Panel Rear Lower (23-23-39)
	4	6024 409	Screw
39	1	2526 450-1	PANEL, Quarter Panel Finish Rear (23-23-85)
40	1	2584 276-7	MOULDING PACKAGE, Quarter Outside Lower Rear (23-23-39)
	2	6024 637	Screw
	6	6001 838	Retainer
	6	6001 752	Retainer
	4	6001 802	Retainer
40A	1	2525 592-3	MOULDING PACKAGE, Rear Window Outside Side (23-23-52)
	6	6001 648	Retainer and Screw
41	1	2571 184-5	ORNAMENT and WEATHERSTRIP, Rear Door Rear Outer (23-11-23) (23-63-33)
	1	2571 172-3	ORNAMENT and WEATHERSTRIP, Rear Door Rear Inner (23-11-23) (23-63-33)
	2	456 867	Screw
	4	6025 425	Screw
	2	9416 628	Screw
42	1	2526 446-7	PANEL, Quarter Outside Wheel Opening Finish (23-23-85)
	4	6024 271	Screw
	8	6001 752	Clip
	8	116 000	Nut
43	1	2584 274-5	MOULDING PACKAGE, Quarter Panel Outside Wheel Opening (23-23-39)
	4	6024 271	Screw
	8	116 000	Nut
	8	6001 752	Clip
44	1	2584 270-1	MOULDING PACKAGE, Rear Door Outside Lower (23-23-33)
	2	446 618	Nut
	2	6001 769	Clip
	8	6001 656	Clip
45	1	2526 456-7	PANEL, Rear Door Outside Finish (23-23-80)
46	1	2584 268-9	MOULDING PACKAGE, Front Door Outside Lower (23-23-32)
	6	---- ---	Clip
	8	6024 271	Screw
	4	9417 621	Nut
	4	6001 769	Clip
47	1	2526 452-3	PANEL, Front Door Outside Finish (23-23-80)
48	2	2584 105	MOULDING PACKAGE, Body Side Sill Outside (23-23-2)
	18	6024 271	Screw
	18	6001 786	Clip
49	1	2584 212-3	MOULDING PACKAGE, Front Door Outside Belt (23-23-32)
	16	6001 496	Retainer

All Packages Include Attaching Parts

Part Type Code is Indicated in Parentheses

EXTERIOR VIEW - CHRYSLER C-H 4 DOOR HARDTOP

MyMopar.com

CODE	PART NAME AND DESCRIPTION	CYL	PER CAR	VALIANT / DART	PLYMOUTH BELVEDERE / DODGE CORONET	PLYMOUTH FURY / DODGE POLARA / CHRYSLER	IMPERIAL

NOTES

TYPE LETTERS indicate: V - Valiant, L - Dart, R - Belvedere, W - Coronet, P - Plymouth, D - Dodge, C - Chrysler, Y - Imperial

★Indicates use as required.

⊟Indicates parts not listed in any previous parts book.

Printed in U.S.A.

Prices and specifications subject to change without notice.

MyMopar.com

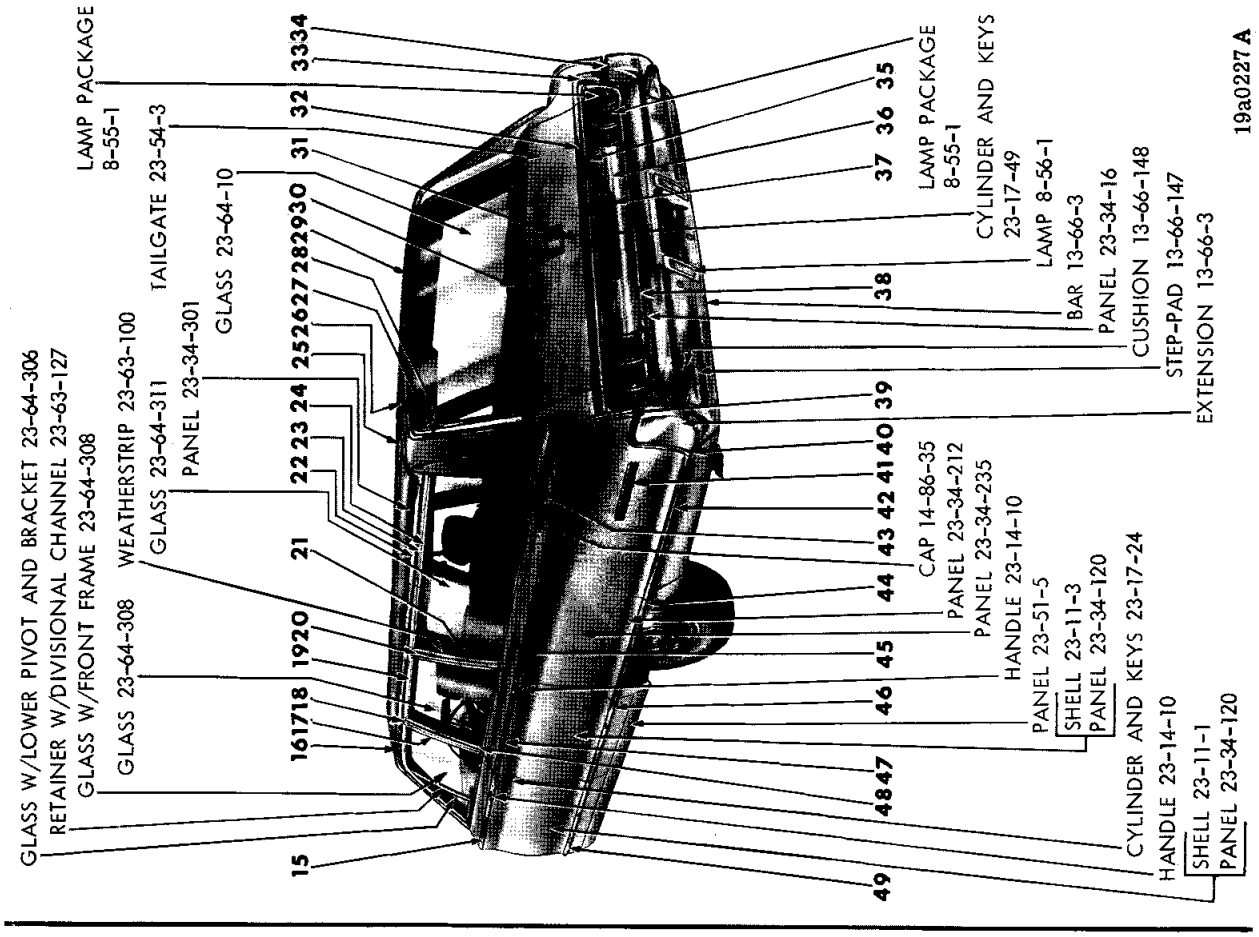

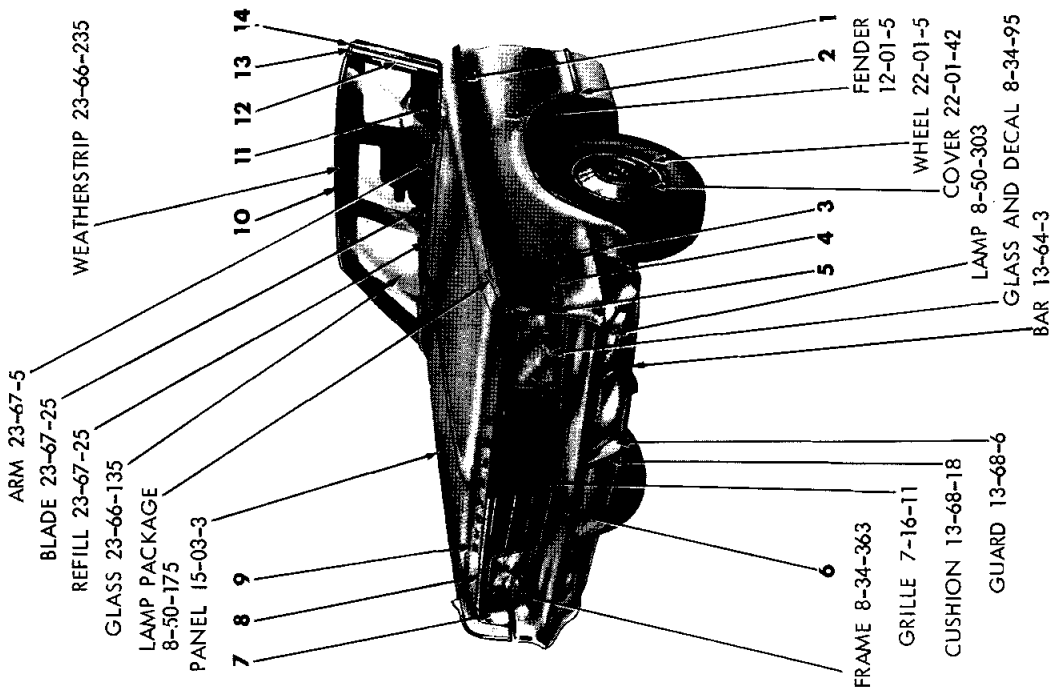

EXTERIOR VIEW - CHRYSLER C-H STATION WAGON

MyMopar.com

REF. NO.	QTY	PART NUMBER	DESCRIPTION
1	1	2584 120-1	MOULDING PACKAGE, Fender Peak Rear (12-15-2)
	8	6001 667	Clip
	6	6001 753	Retainer
	6	6025 140	Nut
2	1	2524 286-7	MOULDING, Fender Wheel Opening (12-15-2)
	14	6024 271	Screw
3	1	2584 116-7	MOULDING PACKAGE, Front Bumper Fender (12-15-2)
	6	---- ---	Nut
4	1	2584 124-5	MOULDING PACKAGE, Fender Front Extension (12-15-2)
	4	6024 349	Screw
	4	6023 164	Nut
5	1	2584 118-9	MOULDING PACKAGE, Fender Peak Front (12-15-2)
	4	6001 753	Retainer
	4	6025 140	Nut
6	1	2524 084-5	FRAME, Radiator Grille (7-16-36)
7	1	2584 112-3	MOULDING PACKAGE, Fender Front (12-15-2)
	4	---- ---	Nut
	2	6025 148	Screw
8	1	2524 258	MOULDING, Hood Front (15-25-2)
	11	6024 895	Screw
9	1	2524 270	LETTER, Hood Front Name, "C" (15-06-16)
	1	2524 271	"H"
	2	2524 272	"R"
	1	2524 273	"Y"
	1	2524 274	"S"
	1	2524 275	"L"
	1	2524 276	"E"
	8	1839 995	Nut
10	1	2584 104	MOULDING PACKAGE, Windshield Outside Upper (23-23-65)
	8	6001 648	Retainer
11	1	2584 110-1	MOULDING PACKAGE, Windshield Outside Lower (23-23-65)
	10	6001 697	Retainer
12	1	2584 108-9	MOULDING PACKAGE, Windshield Outside Side (23-23-65)
	8	6001 648	Retainer
13	1	2529 444-5	MOULDING, Body Front Pillar Trim (23-23-14)
	2	6023 682	Screw
14	1	2529 924-5	MOULDING, Body Front Pillar Drain Trough (23-59-61)
	10	6024 271	Screw
15	1	2584 236-7	MOULDING PACKAGE, Front Door Outside Upper (23-23-32)
	2	---- ---	Retainer
	2	9417 621	Nut
	6	6001 667	Retainer
16	1	2492 782-3	MOULDING, Front Door Window Opening Frame Upper (23-23-32)
17	1	2492 784-5	MOULDING, Front Door Window Opening Frame Rear (23-23-32)
18	1	2570 110-1	PANEL, Body Center Pillar Outside Finish Upper (23-23-16)
	4	6023 247	Screw
19	1	2492 806-7	MOULDING, Rear Door Window Opening Frame Upper (23-23-33)
20	1	2492 808-9	MOULDING, Rear Door Window Opening Frame Rear (23-23-33)
21	1	2528 562-3	MOULDING, Quarter Window Outside Front (23-23-73)
	8	6023 247	Screw
22	1	2526 532-3	MOULDING, Roof Side Drain Trough (23-59-61)
23	1	2584 440-1	COVER PACKAGE, Quarter Window Outside Upper Moulding (23-23-73)
	12	116 000	Nut
24	1	2584 450-1	MOULDING PACKAGE, Quarter Window Outside Upper Primed (23-23-73)
	2	2529 938	Seal
	12	6001 837	Retainer
	12	6025 001	Nut
25	1	2584 442-3	MOULDING PACKAGE, Roof Outside Front (23-23-42)
	24	6023 248	Washer
	24	2573 888	Washer
26	1	2584 522-3	MOULDING PACKAGE, Roof Outside Rear (23-23-42)
	2	2573 890	Retainer
	2	---- ---	Nut
	6	2573 888	Washer
	6	6023 248	Screw
27	1	2586 278-9	MOULDING PACKAGE, Rear Upper Pillar Outside (23-23-60)
	6	---- ---	Clip
28	1	2584 444-5	MOULDING PACKAGE, Rear Upper Pillar Tailgate Opening (23-23-60)
	6	6001 620	Clip
29	1	2584 421	MOULDING PACKAGE, Roof Outside Rear (23-23-42)
	8	6001 816	Clip
	1	2586 106	MOULDING PACKAGE, Roof Outside Rear (used w/Outside Assist Handle) (23-23-42)
	8	6001 816	Clip
30	1	2528 795	MOULDING, Tailgate Outside Belt (23-23-61)
31	1	2486 686	ORNAMENT, Tailgate Window Regulator Outside (23-54-11)
	3	6022 687	Washer
32	1	2584 189	MOULDING PACKAGE, Tailgate Outside Upper, New Yorker (23-23-61)
	7	6001 777	Retainer 7 116 000 Nut
33	1	2573 568-9	MOULDING, Quarter Panel Tail Lamp Opening (23-23-39)
	4	6023 681	Screw
	★	---- ---	Sealer 2 6024 638 Screw
34	1	2573 096-7	MOULDING, Quarter Panel Bumper Opening Inner Extension (23-23-39)
	2	6024 638	Screw 4 6023 681 Screw
35	1	2584 190	MOULDING PACKAGE, Tailgate Outside Intermediate (23-23-61)
	6	116 000	Nut
	6	6001 781	Retainer 3 6024 564 Screw

Part Type Code is Indicated in Parentheses

CONTINUED ON NEXT PAGE

All Packages Include Attaching Parts

EXTERIOR VIEW - CHRYSLER C-H STATION WAGON

MyMopar.com

REF. NO.	QTY	PART NUMBER	DESCRIPTION
36	1	2526 549	PANEL, Tailgate Outside Finish (23-23-77)
	6	6024 564	Screw
37	1	2528 515	MEDALLION, Tailgate Outside (23-54-11)
	3	6000 960	Clip
38	1	2584 191	MOULDING PACKAGE, Tailgate Outside Lower (23-23-61)
	6	6001 713	Retainer
39	1	2584 228-9	MOULDING PACKAGE, Quarter Panel Upper Rear (23-23-39)
	2	6024 637	Screw
	4	6001 547	Clip
40	1	2526 460-1	MOULDING, Quarter Panel Bumper Opening (23-23-39)
	8	6024 373	Screw
41	2	2528 477	BASE and NAME PLATE, Quarter Outside, New Yorker (23-23-238)
	4	6000 960	Clip
42	1	2584 230-1	MOULDING PACKAGE, Quarter Panel Lower Rear (23-23-39)
	4	6001 804	Retainer
43	1	2526 540-1	MOULDING, Roof Outside Rear Outer Corner (23-23-45)
	1	2573 948-9	MOULDING, Roof Outside Rear Inner Corner (23-23-42)
44	1	2584 232-3	MOULDING PACKAGE, Quarter Outside Wheel Opening Panel (23-23-39)
	8	6001 752	Clip
	8	116 000	Nut
45	1	2584 284-5	MOULDING PACKAGE, Quarter Panel Upper Front (23-23-39)
	10	6001 667	Retainer
	8	6001 753	Retainer
	8	6025 140	Nut
46	1	2584 270-1	MOULDING PACKAGE, Rear Door Outside Lower (23-23-33)
	4	---- ---	Screw
	2	9417 621	Nut
	2	6001 769	Clip
	10	---- ---	Clip
47	1	2584 252-3	MOULDING PACKAGE, Rear Door Outside Upper (23-23-33)
	2	---- ---	Retainer
	2	9417 621	Nut
	6	6001 667	Retainer
48	1	2492 796-7	MOULDING, Rear Window Opening Frame Front (23-23-33)
49	1	2584 268-9	MOULDING PACKAGE, Front Door Outside Lower (23-23-32)
	8	6024 271	Screw
	4	9417 621	Nut
	4	1839 995	Clip
	6	---- ---	Clip

All Packages Include Attaching Parts

Part Type Code is Indicated in Parentheses

EXTERIOR VIEW - CHRYSLER C-H STATION WAGON

MyMopar.com

CODE	PART NAME AND DESCRIPTION	CYL	PER CAR	VALIANT / DART	PLYMOUTH BELVEDERE / DODGE CORONET	PLYMOUTH FURY / DODGE POLARA / CHRYSLER	IMPERIAL

NOTES

TYPE LETTERS Indicate: V - Valiant, L - Dart, R - Belvedere, W - Coronet, P - Plymouth, D - Dodge, C - Chrysler, Y - Imperial

★Indicates use as required.

⊟Indicates parts not listed in any previous parts book.

MyMopar.com

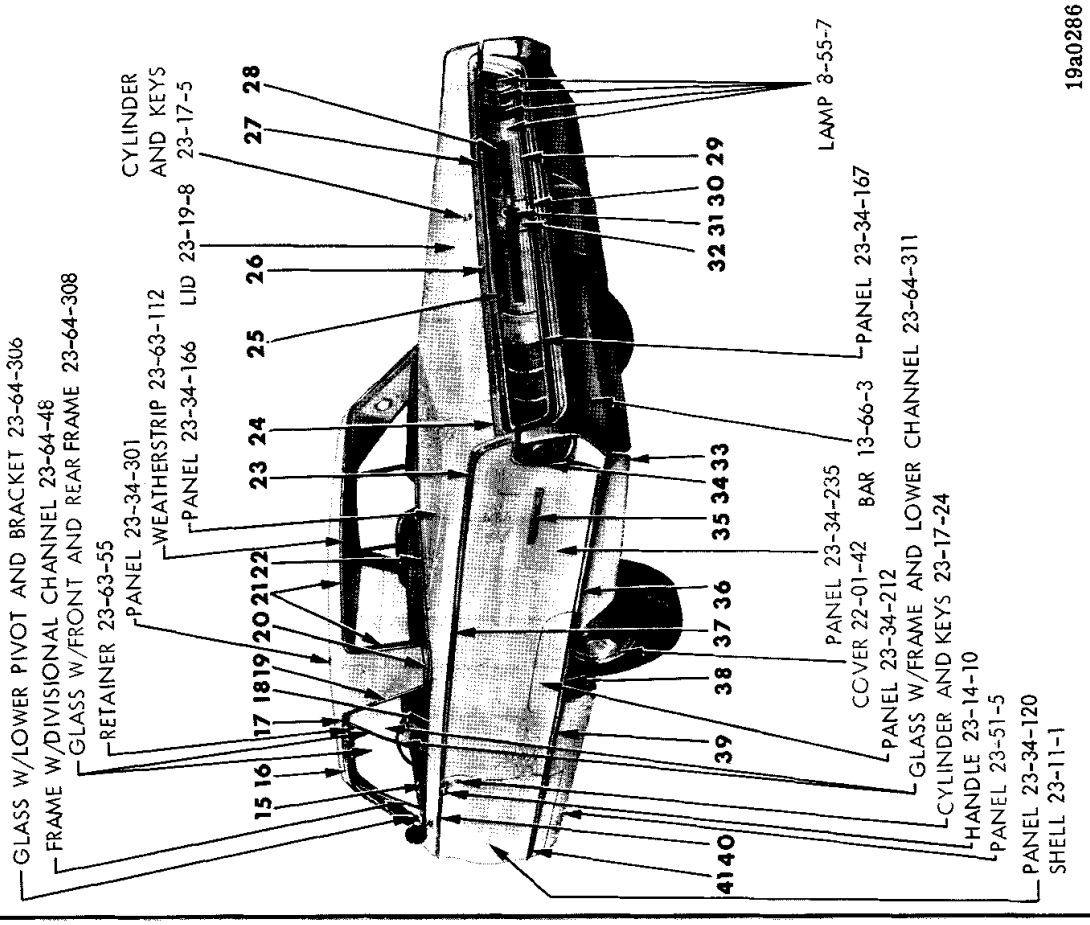

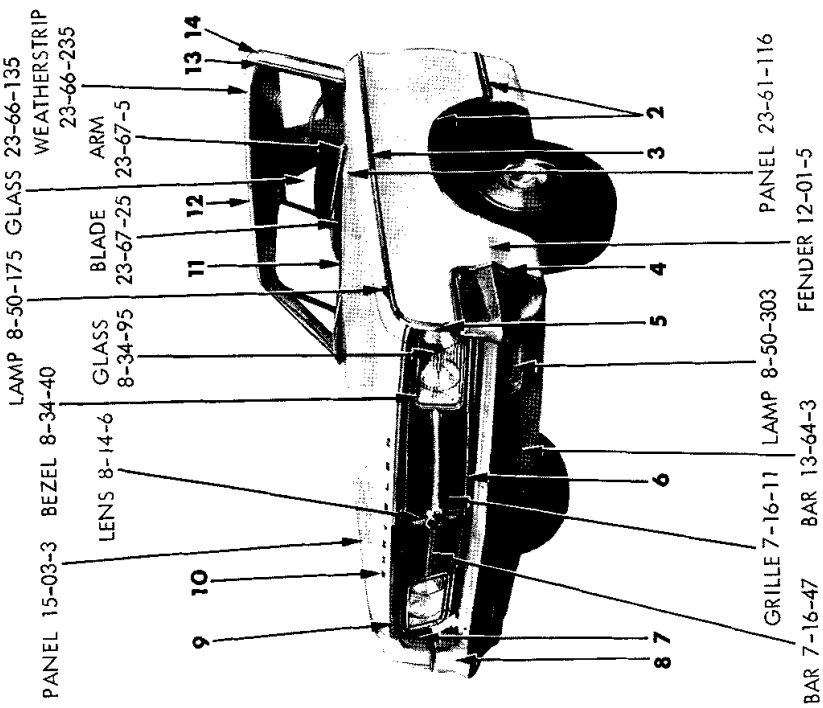

EXTERIOR VIEW - CHRYSLER C-P 300L 2 DOOR HARDTOP

MyMopar.com

REF. NO.	QTY	PART NUMBER	DESCRIPTION
2	1	2524 286-7	MOULDING PACKAGE, Fender Wheel Opening (12-15-2)
	14	6024 271	Screw
	2	6001 849	Clip
	4	441 239	Nut
3	1	2584 196-7	MOULDING PACKAGE, Fender Peak Rear (12-15-2)
	8	6001 667	Clip
	6	6001 753	Retainer
	6	6025 140	Nut
4	1	2584 116-7	MOULDING PACKAGE, Front Bumper Fender (12-15-2)
	6	---- ---	Nut
5	1	2584 194-5	MOULDING PACKAGE, Fender Peak Front (12-15-2)
	4	6001 753	Retainer
	4	6025 140	Nut
6	1	2524 084-5	FRAME, Radiator Grille (7-16-36)
7	1	2584 112-3	MOULDING PACKAGE, Fender Front (12-15-2)
	4	---- ---	Nut
	2	6025 148	Screw
8	1	2584 124-5	MOULDING PACKAGE, Fender Front Extension (12-15-2)
	4	6024 349	Screw
	4	6023 164	Nut
9	1	2524 258	MOULDING, Hood Front (15-25-2)
	11	6024 895	Screw
10	1	2524 270	LETTER, Hood Front, "C" (15-06-16)
	1	2524 271	"H"
	2	2524 272	"R"
	1	2524 273	"Y"
	1	2524 274	"S"
	1	2524 275	"L"
	1	2524 276	"E"
	8	6001 759	Nut
11	1	2584 110-1	MOULDING PACKAGE, Windshield Outside Lower (23-23-65)
	10	6001 697	Retainer
12	1	2584 099	MOULDING PACKAGE, Windshield Outside Upper (23-23-65)
	8	6001 648	Retainer
13	1	2584 106-7	MOULDING PACKAGE, Windshield Outside Side (23-23-65)
	8	6001 648	Retainer
14	1	2574 850-1	MOULDING, Body Front Pillar Trim (use w/Vinyl Roof) (23-23-14)
	2	6023 682	Screw
15	1	2584 214-5	MOULDING PACKAGE, Door Outside Belt (23-23-32)
	16	6001 496	Retainer
16	1	2526 480-1	MOULDING, Roof Side Drain Trough Front (23-59-61)
17	1	2526 484-5	COVER, Roof Side Drain Trough Moulding Front (23-59-57)
18	1	2584 218-9	MOULDING PACKAGE, Quarter Outside Belt (23-23-39)
	12	6001 496	Retainer
19	1	2526 482-3	MOULDING, Roof Side Drain Trough Rear (23-59-61)
20	1	2584 178-9	MOULDING PACKAGE, Roof Outside Extension Belt (23-23-42)
	4	---- ---	Washer
	4	9411 618	Nut
21	1	2525 596-7	MOULDING PACKAGE, Rear Window Outside Upper and Side (23-23-52) (Note #1)
	14	6001 648	Retainer
	1	2605 162-3	MOULDING, Rear Window Outside Upper and Side (23-23-52) (Note #2)
22	1	2525 595	MOULDING PACKAGE, Rear Window Outside Lower (23-23-52) (Note #1)
	7	6001 648	Retainer
	1	2605 164-5	MOULDING, Rear Window Outside Lower (23-23-52) (Note #2)
23	1	2584 208-9	MOULDING PACKAGE, Quarter Outside Upper Rear (23-23-39)
	2	---- ---	Nut
24	1	2584 286-7	MOULDING PACKAGE, Quarter Outside Rear (23-23-39)
	2	6024 403	Screw
	2	---- ---	Nut
25	1	2573 238-9	PANEL, Deck Opening Lower Finish (23-23-28)
	4	6024 564	Screw
26	1	2584 184	MOULDING PACKAGE, Deck Lid Lower, Chrysler (23-23-30)
	8	6001 652	Retainer
	8	9417 621	Nut
27	1	2584 182	MOULDING PACKAGE, Deck Opening Lower Panel Upper (23-23-23)
	4	6001 779	Clip
	2	---- ---	Nut
28	1	2573 704-5	ORNAMENT and STUD, Deck Opening Lower Panel (23-34-184)
	4	6025 001	Nut
	4	6024 733	Washer
29	1	2584 186-7	MOULDING PACKAGE, Deck Opening Lower Panel Lower (23-23-23)
	6	6001 778	Clip
30	1	2526 512	MOULDING, Deck Opening Lower Panel Fuel Filler Door (23-23-23)
	2	9413 268	Screw

NOTE 1: UP TO SERIAL NO. 195358

NOTE 2: AFTER SERIAL NO. 195358

CONTINUED ON NEXT PAGE

All Packages Include Attaching Parts

Part Type Code is Indicated in Parentheses

EXTERIOR VIEW - CHRYSLER C-P 300L 2 DOOR HARDTOP

MyMopar.com

REF. NO.	QTY	PART NUMBER	DESCRIPTION
31	1	2573 542	ORNAMENT, MEDALLION and STUDS, Deck Opening Lower Panel Fuel Filler Door (23-34-184)
	2	9417 621	Nut
	2	6024 733	Washer
32	1	2573 237	PANEL, Deck Opening Lower Fuel Filler Door Finish (23-23-18)
33	1	2527 984-5	MOULDING, Quarter Outside Rear Lower (23-23-39)
	4	6024 409	Screw
34	1	2526 458-9	MOULDING, Quarter Outside Bumper Opening (23-23-39)
	6	6024 373	Screw
35	2	2573 544	NAME PLATE and BASE, Quarter Outside, Chrysler 300 (23-34-238)
	4	---- ---	Nut
36	1	2584 276-7	MOULDING PACKAGE, Quarter Outside Lower Rear (23-23-39)
	2	6024 637	Screw
	6	6001 838	Retainer
	6	6001 752	Retainer
	4	6001 802	Retainer
37	1	2584 256-7	MOULDING PACKAGE, Quarter Outside Upper Front (23-23-39)
	18	6001 667	Retainer
	8	---- ---	Retainer
	8	446 618	Nut
38	1	2584 274-5	MOULDING PACKAGE, Quarter Panel Outside Wheel Opening (23-23-39)
	4	6024 271	Screw
	8	116 000	Nut
	8	6001 752	Clip
39	1	2584 272-3	MOULDING PACKAGE, Quarter Outside Lower Front (23-23-39)
	10	6024 271	Screw
	8	6001 656	Clip
40	1	2584 238-9	MOULDING PACKAGE, Door Outside Upper (23-23-32)
	2	6001 771	Retainer
	2	446 618	Nut
	8	6001 667	Retainer
41	1	2584 266-7	MOULDING PACKAGE, Door Outside Lower (23-23-32)
	10	6024 271	Screw
	2	9417 621	Nut
	2	6001 769	Clip
	10	---- ---	Clip

All Packages Include Attaching Parts

Part Type Code is Indicated in Parentheses

EXTERIOR VIEW - CHRYSLER C-P 300L 2 DOOR HARDTOP

MyMopar.com

CODE	PART NAME AND DESCRIPTION	CYL	PER CAR	VALIANT / DART	PLYMOUTH BELVEDERE / DODGE CORONET	PLYMOUTH FURY / DODGE POLARA / CHRYSLER	IMPERIAL

NOTES

TYPE LETTERS Indicate: V - Valiant, L - Dart, R - Belvedere, W - Coronet, P - Plymouth, D - Dodge, C - Chrysler, Y - Imperial

★Indicates use as required.

⊟Indicates parts not listed in any previous parts book.

Printed in U.S.A.

Prices and specifications subject to change without notice.

MyMopar.com

May, 1965 Supersedes Nov. 30, 1964.

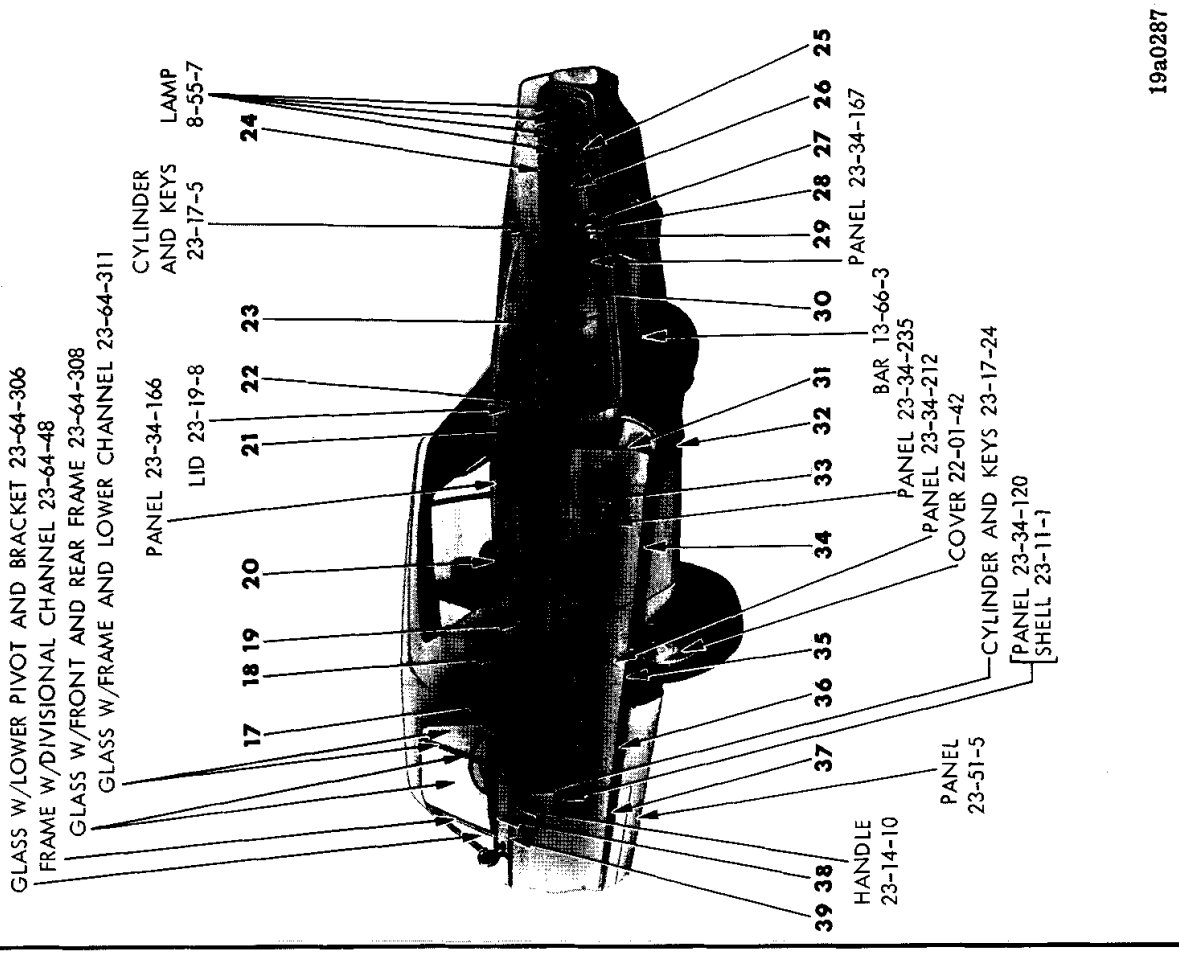

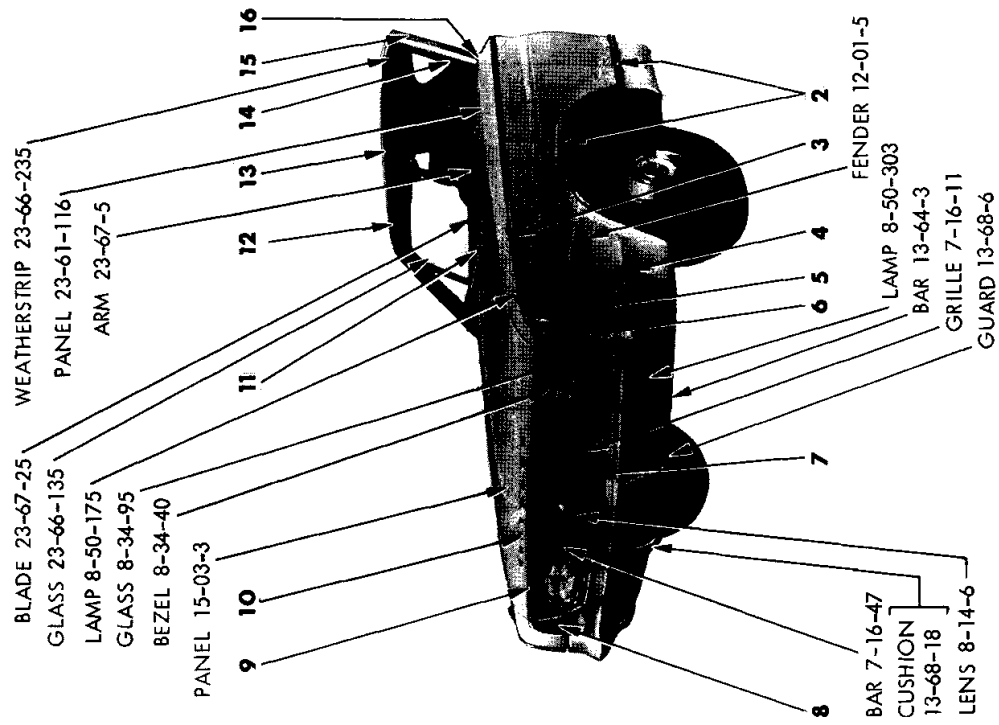

EXTERIOR VIEW - CHRYSLER C-P 300L CONVERTIBLE COUPE

MyMopar.com

REF. NO.	QTY	PART NUMBER	DESCRIPTION
2	1	2524 286-7	MOULDING PACKAGE, Fender Wheel Opening (12-15-2)
	12	6024 271	Screw
	2	6001 849	Clip
	4	441 239	Nut
3	1	2584 196-7	MOULDING PACKAGE, Fender Peak Rear (12-15-2)
	8	6001 667	Clip
	6	6001 753	Retainer
	6	6025 140	Nut
4	1	2584 116-7	MOULDING PACKAGE, Front Bumper Fender (12-15-2)
	6	---- ---	Nut
5	1	2584 194-5	MOULDING PACKAGE, Fender Peak Front (12-15-2)
	4	6001 753	Retainer
	4	6025 140	Nut
6	1	2584 124-5	MOULDING PACKAGE, Fender Front Extension (12-15-2)
	4	6024 349	Screw
	4	6023 164	Nut
7	1	2524 084-5	FRAME, Radiator Grille (7-17-1)
8	1	2584 112-3	MOULDING PACKAGE, Fender Front (12-15-2)
	4	---- ---	Nut
	2	6025 148	Screw
9	1	2524 258	MOULDING, Hood Front (15-25-2)
	11	6024 895	Screw
10	1	2524 270	LETTER, Hood Front, "C" (15-06-16)
	1	2524 271	"H"
	2	2524 272	"R"
	1	2524 273	"Y"
	1	2524 274	"S"
	1	2524 275	"L"
	1	2524 276	"E"
	8	6001 759	Nut
11	1	2584 110-1	MOULDING PACKAGE, Windshield Outside Lower (23-23-65)
	10	6001 697	Retainer
12	1	2584 099	MOULDING PACKAGE, Windshield Outside Upper (23-23-65)
	8	6001 648	Retainer
13	1	2484 602-3	MOULDING, Windshield Outside Upper Header (23-23-65)
	5	6025 132	Screw
14	1	2584 106-7	MOULDING PACKAGE, Windshield Outside Side (23-23-65)
	8	6001 648	Retainer
15	1	2481 844-5	MOULDING, Body Front Upper Pillar Outside (23-23-14)
	8	9415 214	Screw
16	1	2528 662-3	EXTENSION, Body Front Pillar Outside Moulding Lower (23-23-14)
	4	9418 246	Screw
17	1	2584 220-1	MOULDING PACKAGE, Quarter Outside Belt (23-23-39)
	6	6001 496	Retainer
	2	---- ---	Screw
18	1	2584 088-9	MOULDING PACKAGE, Quarter Outside Panel Belt Rear (23-23-39)
	2	6025 927	Fastener
	2	6025 985	Screw
19	1	2584 256-7	MOULDING PACKAGE, Quarter Outside Upper Front (23-23-39)
	18	6001 667	Retainer
	8	---- ---	Retainer
	8	446 618	Nut
20	1	2584 082-3	MOULDING PACKAGE, Deck Opening Upper Panel (23-23-31)
	20	2094 380	Fastener
21	1	2584 208-9	MOULDING PACKAGE, Quarter Outside Upper Rear (23-23-39)
	2	---- ---	Nut
22	1	2584 286-7	MOULDING PACKAGE, Quarter Outside Rear (23-23-39)
	2	6024 403	Screw
	2	---- ---	Nut
23	1	2584 182	MOULDING PACKAGE, Deck Opening Lower Panel Upper (23-23-23)
	4	6001 779	Clip
	2	---- ---	Nut
24	1	2584 184	MOULDING PACKAGE, Deck Lid Lower, Chrysler (23-23-30)
	8	6001 652	Retainer
	8	9417 621	Nut
25	1	2584 186-7	MOULDING PACKAGE, Deck Opening Lower Panel Lower (23-23-23)
	6	6001 778	Clip
26	1	2573 704-5	ORNAMENT and STUD, Deck Opening Lower Panel (23-34-184)
	4	6025 001	Nut
	4	6024 733	Washer
27	1	2573 542	ORNAMENT, MEDALLION and STUDS, Deck Opening Lower Panel Fuel Filler Door (23-34-184)
	2	9417 621	Nut
	2	6024 733	Washer
28	1	2573 237	PANEL, Deck Opening Lower Fuel Filler Door Finish (23-23-18)
29	1	2526 512	MOULDING, Deck Opening Lower Panel Fuel Filler Door (23-23-23)
	2	9413 268	Screw
30	1	2573 238-9	PANEL, Deck Opening Lower Finish (23-23-28)
	4	6024 564	Screw

CONTINUED ON NEXT PAGE

All Packages Include Attaching Parts

Part Type Code is Indicated in Parentheses

EXTERIOR VIEW - CHRYSLER C-P 300L CONVERTIBLE COUPE

MyMopar.com

REF. NO.	QTY	PART NUMBER	DESCRIPTION
31	1	2526 458-9	MOULDING, Quarter Outside Bumper Opening (23-23-39)
	6	6024 373	Screw
32	1	2527 984-5	MOULDING, Quarter Outside Rear Lower (23-23-39)
	4	6024 409	Screw
33	2	2573 544	NAME PLATE and BASE, Quarter Outside, Chrysler 300 (23-34-238)
	4	---- ---	Nut
34	1	2584 276-7	MOULDING PACKAGE, Quarter Outside Lower Rear (23-23-39)
	2	6024 637	Screw
	6	6001 838	Retainer
	6	6001 752	Retainer
	4	6001 802	Retainer
35	1	2584 274-5	MOULDING PACKAGE, Quarter Panel Outside Wheel Opening (23-23-39)
	4	6024 271	Screw
	8	116 000	Nut
	8	6001 752	Clip
36	1	2584 272-3	MOULDING PACKAGE, Quarter Outside Lower Front (23-23-39)
	10	6024 271	Screw
	8	6001 656	Clip
37	1	2584 266-7	MOULDING PACKAGE, Door Outside Lower (23-23-32)
	10	6024 271	Screw
	2	9417 621	Nut
	2	6001 769	Clip
	10	---- ---	Clip
38	1	2584 214-5	MOULDING PACKAGE, Door Outside Belt (23-23-32)
	16	6001 496	Retainer
39	1	2584 238-9	MOULDING PACKAGE, Door Outside Upper (23-23-32)
	2	6001 771	Retainer
	2	446 618	Nut
	8	6001 667	Retainer

All Packages Include Attaching Parts

Part Type Code is Indicated in Parentheses

EXTERIOR VIEW - CHRYSLER C-P 300L CONVERTIBLE COUPE

MyMopar.com

CODE	PART NAME AND DESCRIPTION	CYL	PER CAR	VALIANT / DART	PLYMOUTH BELVEDERE / DODGE CORONET	PLYMOUTH FURY / DODGE POLARA / CHRYSLER	IMPERIAL

NOTES

TYPE LETTERS Indicate: V - Valiant, L - Dart, R - Belvedere, W - Coronet, P - Plymouth, D - Dodge, C - Chrysler, Y - Imperial

★Indicates use as required.

⊟Indicates parts not listed in any previous parts book.

Printed in U.S.A.

Prices and specifications subject to change without notice.

MyMopar.com

May, 1965 Supersedes Nov. 30, 1964.

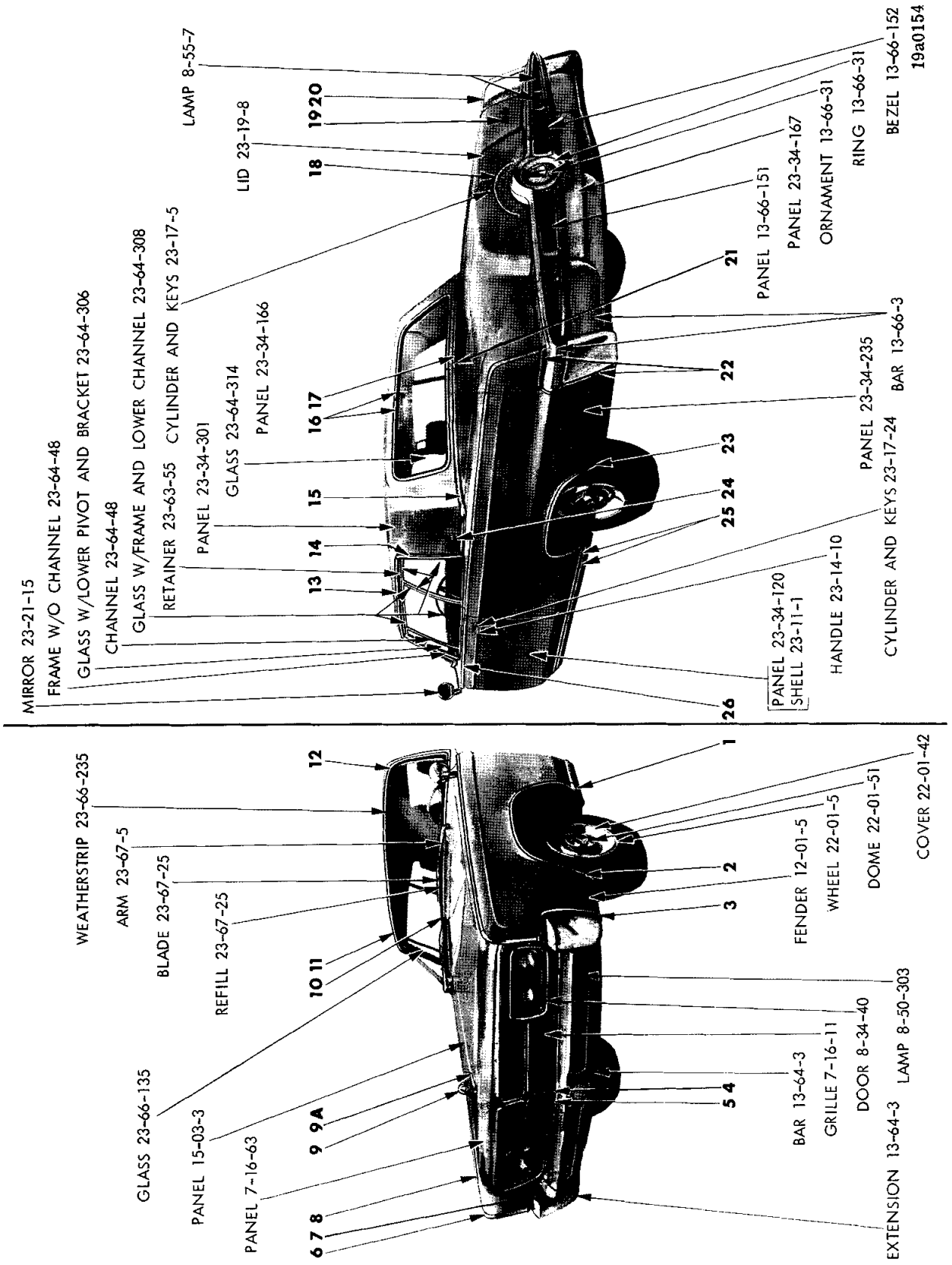

EXTERIOR VIEW - IMPERIAL Y-M 2 DOOR HARDTOP

MyMopar.com

REF. NO.	QTY	PART NUMBER	DESCRIPTION
1	1	2445 054-5	CAP, Fender Wheel Opening to Sill Moulding (12-15-9)
	2	6024 271	Screw
2	1	2417 896-7	MOULDING, Fender Wheel Opening (12-15-2)
	14	6024 271	Screw
3	1	2417 656-7	MOULDING, Fender Side Lower Front (12-15-2)
	14	9414 713	Screw
	6	9414 711	Screw
4	1	2449 737	CAP, Grille Panel Lower Moulding (7-16-44)
5	2	2449 736	MOULDING, Radiator Grille Lower (7-16-36)
	4	9414 711	Screw
6	1	2448 598-9	MOULDING PACKAGE, Fender Front (12-15-2)
	4	6024 718	Seal
	4	6023 202	Nut and Washer
7	1	2495 250-1	MOULDING PACKAGE, Radiator Grille Lower Side (7-16-36)
	4	9414 711	Screw
8	1	2495 150-1	MOULDING PACKAGE, Fender Top (12-15-2)
	16	6001 647	Retainer and Stud
	16	---- ---	Nut
	2	6001 547	Clip
9	1	2417 893	ORNAMENT, Radiator Grille Top (7-17-1)
	1	6023 202	Nut
9A	1	2445 064	EXTENSION, Hood Panel Radiator Grille Ornament Base
	1	6023 202	Nut
10	1	2495 695	MOULDING PACKAGE, Windshield Outside Lower (23-23-65)
	10	6006 200	Clip
11	1	2492 039	MOULDING, Windshield Outside Upper (23-23-65)
	5	6001 553	Retainer and Screw
12	1	2492 040-1	MOULDING, Windshield Outside Side (23-23-65)
	8	6024 373	Screw and Sealer
13	1	2480 528-9	MOULDING, Roof Drain Trough Side Front (w/o Vinyl Roof) (23-59-61)
	4	6023 370	Screw
	1	2528 982-3	MOULDING, Roof Drain Trough Side Front (w/Vinyl Roof) (23-59-61)
	20	6024 271	Screw w/Sealer
	4	6023 370	Screw
14	1	2529 078-9	MOULDING, Roof Side Drain Trough Rear (w/o Vinyl Roof) (23-59-61)
	2	6023 370	Screw
	1	2483 784-5	MOULDING, Roof Side Drain Trough Rear (w/Vinyl Roof) (23-59-61)
	2	6023 370	Screw
	10	6024 271	Screw w/Sealer
15	1	2495 742-3	MOULDING PACKAGE, Quarter Panel Belt (23-23-39)
	6	9411 618	Nut
	6	6022 013	Seal
	2	116 000	Nut
	2	6024 729	Seal
16	1	2492 046-7	MOULDING, Rear Window Outside Finish (23-23-52)
	18	6001 084	Retainer and Screw
17	1	2495 746-7	MOULDING PACKAGE, Deck Upper Panel (23-23-31)
	2	6024 271	Screw
	10	6022 013	Seal
	10	9411 618	Nut
18	2	2480 759	"I", Deck Lid Name Letter (23-19-114)
	1	2480 760	"M"
	1	2480 761	"P"
	1	2480 762	"E"
	1	2480 763	"R"
	1	2480 764	"A"
	1	2480 765	"L"
	16	6000 050	Clip
19	1	2483 446	NAME PLATE, Deck Lid (23-19-114)
	4	152 259	Nut
20	1	2495 736-7	MOULDING PACKAGE, Quarter Panel Upper, w/Cap (23-23-39)
	12	6001 657	Retainer
	16	6001 475	Retainer
	18	---- ---	Nut
	2	6024 705	Seal
21	1	2481 193	COVER, Deck Opening Upper Panel Extension Moulding Joint (23-23-41)
22	1	2495 744-5	MOULDING PACKAGE, Quarter Panel Lower Rear (23-23-39)
	6	6023 202	Nut
	6	6022 007	Seal
	2	6023 898	Screw
23	1	2480 080-1	MOULDING, Quarter Panel Wheel Opening (23-23-39)
	14	6024 271	Screw
24	2	2483 445	NAME PLATE, Quarter Outside Inner Upper Extension, Crown Coupe (23-34-238)
	10	152 259	Nut
25	1	2495 740-1	MOULDING PACKAGE, Body Side Sill, w/Cap (23-23-2)
	18	6001 492	Clip
	20	6023 975	Screw
	2	6024 637	Screw
26	2	2495 727	MOULDING PACKAGE, Door (23-23-32)
	4	6024 281	Seal
	4	6022 007	Seal
	2	---- ---	Nut
	14	6001 547	Clip
	2	6024 702	Seal

All Packages Include Attaching Parts

Part Type Code is Indicated in Parentheses

EXTERIOR VIEW - IMPERIAL Y-M 2 DOOR HARDTOP

MyMopar.com

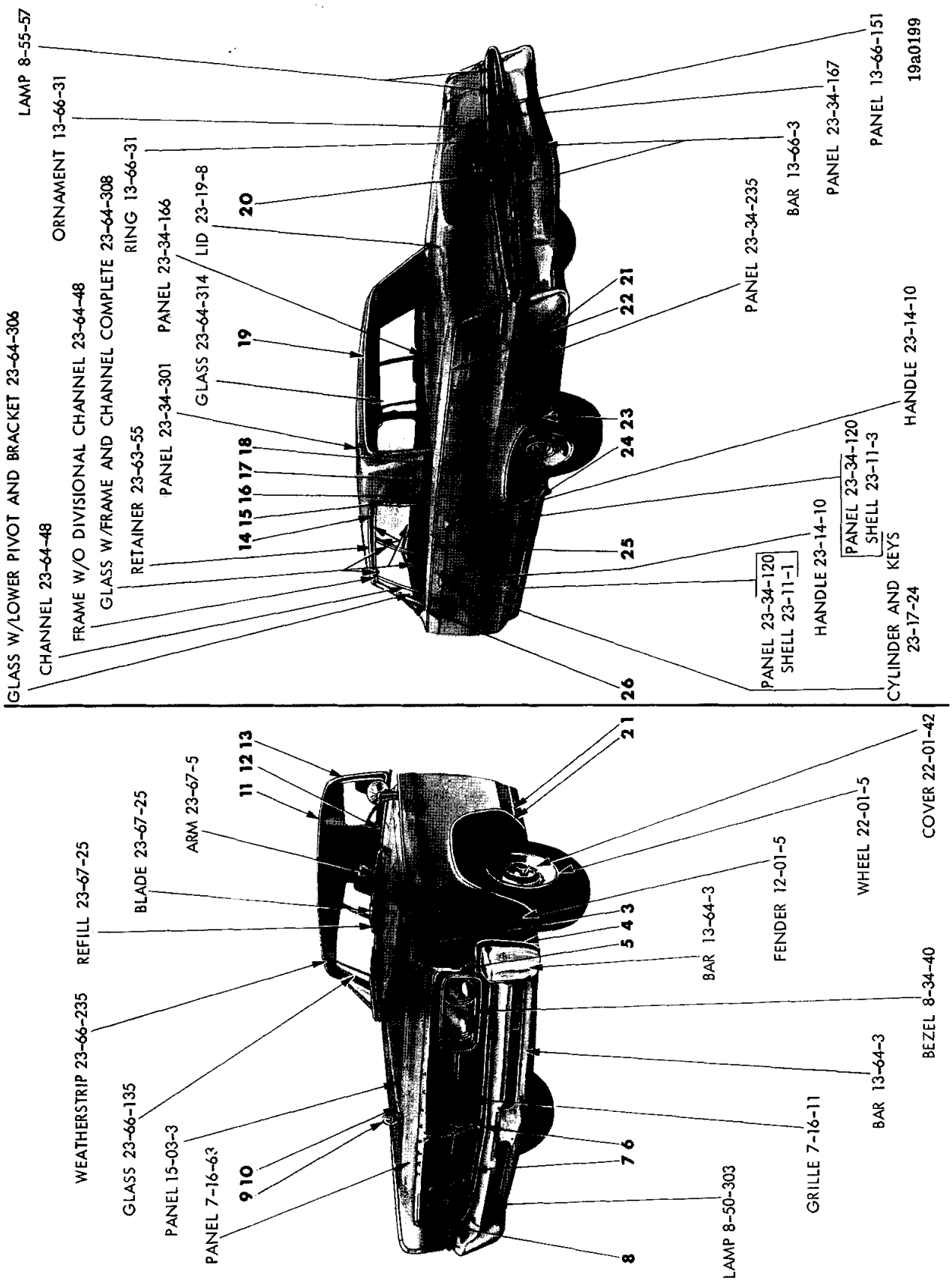

EXTERIOR VIEW - IMPERIAL Y-M 4 DOOR HARDTOP

MyMopar.com

REF. NO.	QTY	PART NUMBER	DESCRIPTION
1	1	2445 054-5	CAP, Fender Wheel Opening to Sill Moulding (12-15-9)
	2	6024 271	Screw
2	1	2417 896-7	MOULDING, Fender Wheel Opening (12-15-2)
	14	6024 271	Screw
3	1	2495 150-1	MOULDING PACKAGE, Fender Top (12-15-2)
	16	6001 647	Retainer
	16	---- ---	Nut
	2	6001 547	Clip
4	1	2417 656-7	MOULDING PACKAGE, Fender Side Lower Front (12-15-2)
	14	9414 713	Screw
	6	9414 711	Screw
5	1	2448 598-9	MOULDING PACKAGE, Fender Front (12-15-2)
	4	6024 718	Seal
	4	6023 202	Nut
6	1	2449 737	CAP, Radiator Grille Lower Panel Moulding (7-16-44)
	2	9414 711	Screw
7	2	2449 736	MOULDING, Radiator Grille Lower Panel (7-16-36)
	6	9414 711	Screw
8	1	2495 250-1	MOULDING PACKAGE, Radiator Grille Lower Panel Side (7-16-36)
	2	6024 421	Screw
	2	---- ---	Washer
	4	---- ---	Nut
9	1	2417 893	ORNAMENT, Radiator Grille Panel Top (7-17-1)
	1	6023 202	Nut
10	1	2445 064	EXTENSION, Hood Panel, Radiator Grille Ornament Base (15-03-21)
	1	6023 202	Nut
11	1	2492 039	MOULDING, Windshield Outside Upper (23-23-65)
	5	6001 553	Retainer and Screw
12	1	2495 695	MOULDING PACKAGE, Windshield Outside Lower (23-23-65)
	10	6006 200	Clip
13	1	2492 040-1	MOULDING, Windshield Outside Side (23-23-65)
	2	180 077	Screw and Seal
	8	6024 373	Screw and Sealer
14	1	2480 528-9	MOULDING, Roof Drain Trough Side Front, w/o Vinyl Roof (23-59-61)
	4	6023 370	Screw
	1	2528 983	MOULDING, Roof Drain Trough Side Front, w/Vinyl Roof (23-59-61)
	4	6023 370	Screw
15	1	2529 076-7	MOULDING, Roof Side Drain Trough Rear, w/o Vinyl Roof (23-59-61)
	2	6023 370	Screw
15	1	2528 788-9	MOULDING, Roof Side Drain Trough Rear, w/Vinyl Roof (23-59-61)
	2	6023 370	Screw
16	2	2480 716	MEDALLION, Quarter Outside Inner Panel Upper Extension Moulding (23-34-334)
17	1	2480 770-1	MOULDING, Quarter Panel Belt, w/Letters and Medallion (23-23-39)
	6	9411 618	Nut
	2	---- ---	Nut
	6	6022 013	Washer
	2	---- ---	Washer
18	2	2480 711	"C", LETTER, Quarter Outside Inner Panel Upper Extension Moulding (23-34-238)
	2	2480 712	"R"
	2	2480 713	"O"
	2	2480 714	"W"
	2	2480 715	"N"
19	1	2495 752-3	MOULDING PACKAGE, Rear Window Outside Finish (23-23-52)
	14	6001 084	Retainer and Screw
20	2	2480 759	"I", Deck Lid Name Letter (23-19-114)
	1	2480 760	"M"
	1	2480 761	"P"
	1	2480 762	"E"
	1	2480 763	"R"
	1	2480 764	"A"
	1	2480 765	"L"
	16	6000 050	Clip
21	1	2495 744-5	MOULDING PACKAGE, Quarter Panel Bumper Depression (23-23-39)
	6	6023 202	Nut
	6	6022 007	Seal
	2	6023 898	Screw
22	1	2495 738-9	MOULDING PACKAGE, Quarter Panel Upper, w/Cap (23-23-39)
	12	6001 476	Retainer
	14	6001 475	Retainer
23	1	2480 080-1	MOULDING, Quarter Panel Wheel Opening (23-23-39)
	14	6024 271	Screw
24	1	2495 740-1	MOULDING PACKAGE, Body Side Sill, w/Cap (23-23-2)
	18	6001 492	Clip
	20	6023 975	Screw
25	1	2495 734-5	MOULDING PACKAGE, Rear Door Outside Upper (23-23-33)
	4	6000 505	Clip
	4	6022 007	Seal
	4	9417 621	Nut
	2	---- ---	Nut
26	1	2495 732-3	MOULDING PACKAGE, Front Door Outside Upper (23-23-32)
	6	6000 505	Clip
	4	6022 007	Seal
	4	9417 621	Nut
	2	---- ---	Nut

All Packages Include Attaching Parts

Part Type Code is Indicated in Parentheses

EXTERIOR VIEW - IMPERIAL Y-M 4 DOOR HARDTOP

MyMopar.com

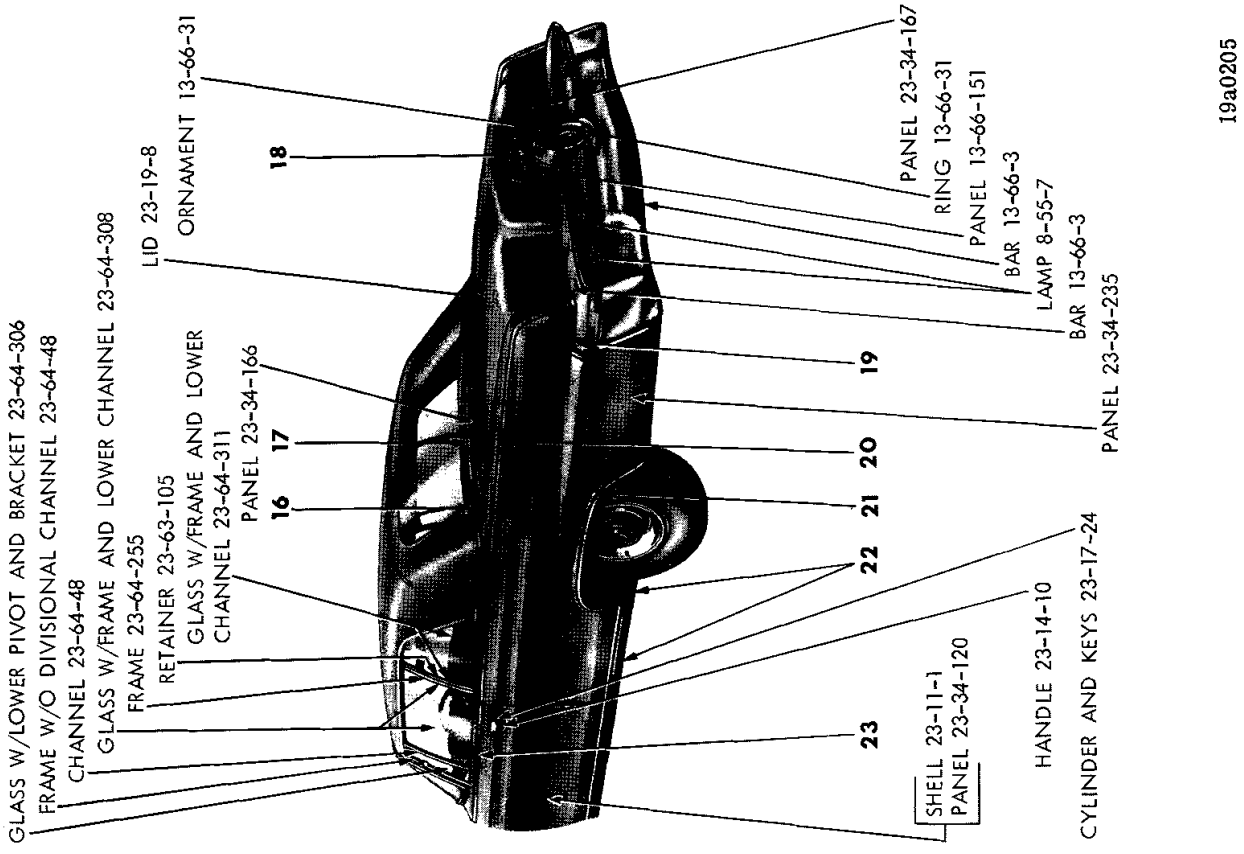

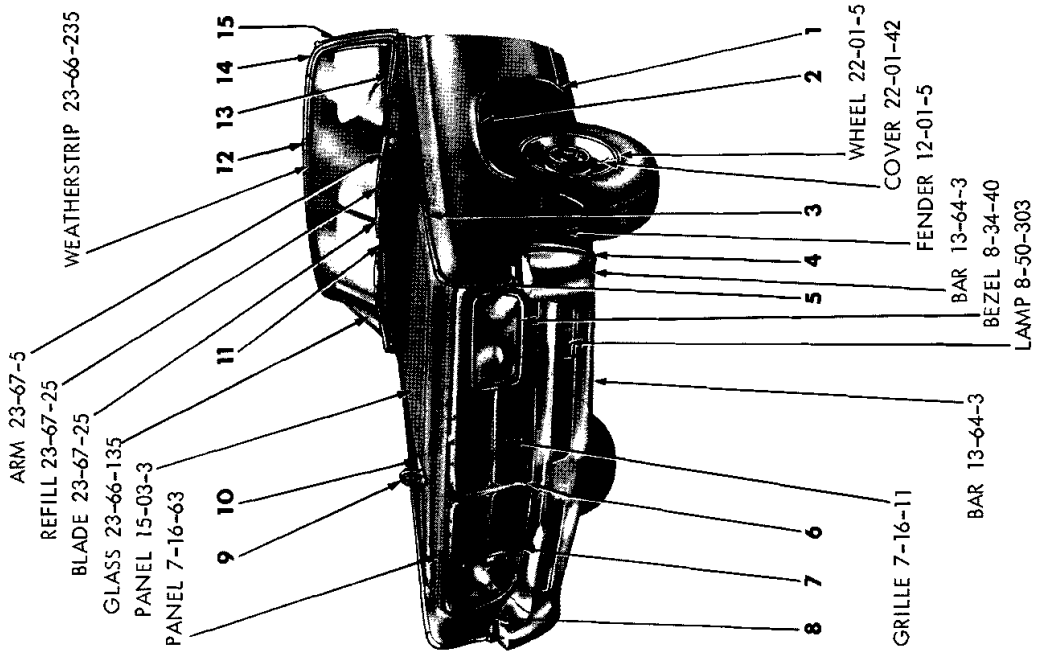

EXTERIOR VIEW - IMPERIAL Y-M CONVERTIBLE COUPE

MyMopar.com

REF. NO.	QTY	PART NUMBER	DESCRIPTION
1	1	2445 054-5	CAP, Fender Wheel Opening to Sill Moulding (12-15-9)
	2	6024 271	Screw
2	1	2417 896-7	MOULDING, Fender Wheel Opening (12-15-2)
	14	6024 271	Screw
3	1	2495 150-1	MOULDING PACKAGE, Fender Top (12-15-2)
	16	6001 647	Retainer
	16	---- ---	Nut
	2	6001 547	Clip
4	1	2417 656-7	MOULDING PACKAGE, Fender Side Lower Front (12-15-2)
	14	9414 713	Screw
	6	9414 711	Screw
5	1	2448 598-9	MOULDING PACKAGE, Fender Front (12-15-2)
	4	6024 718	Seal
	4	6023 202	Nut
6	1	2449 737	CAP, Radiator Grille Lower Panel Moulding (7-16-44)
	2	9414 711	Screw
7	2	2449 736	MOULDING, Radiator Grille Lower Panel (7-16-36)
	6	9414 711	Screw
8	1	2495 250-1	MOULDING PACKAGE, Radiator Grille Lower Panel Side (7-16-36)
	2	6024 421	Screw
	2	---- ---	Washer
	4	---- ---	Nut
9	1	2417 893	ORNAMENT, Radiator Grille Panel Top (7-17-1)
	1	6023 202	Nut
10	1	2445 064	EXTENSION, Hood Panel, Radiator Grille Ornament Base (15-03-21)
	1	6023 202	Nut
11	1	1692 191	CAP, Windshield Outside Finish Lower Moulding Center Joint (23-23-66)
12	1	2196 749	MOULDING PACKAGE, Windshield Outside Finish Upper (23-23-65)
	10	6006 176	Stud
	10	6006 434	Retainer
13	1	2196 477-8	MOULDING PACKAGE, Windshield Outside Finish Lower (23-23-65)
	20	6006 200	Clip
14	1	2196 673-4	MOULDING PACKAGE, Windshield Header Upper Corner (23-23-65)
	4	---- ---	Screw
15	1	2196 481-2	MOULDING PACKAGE, Windshield Outside Finish Side (23-23-65)
	6	6000 000	Screw
	2	---- ---	Screw
16	1	2481 210-1	MOULDING, Belt (23-23-49)
	24	2094 380	Fastener
17	1	2480 843	COVER, Belt Moulding (23-23-41)
	1	2094 380	Fastener
18	2	2480 759	"I", Deck Lid Letter (23-19-114)
	1	2480 760	"M"
	1	2480 761	"P"
	1	2480 762	"E"
	1	2480 763	"R"
	1	2480 764	"A"
	1	2480 765	"L"
	16	6000 050	Clip
19	1	2495 744-5	MOULDING PACKAGE, Quarter Panel Bumper Depression (23-23-39)
	6	6023 202	Nut
	6	6022 007	Seal
	2	6023 898	Screw
20	1	2495 736-7	MOULDING PACKAGE, Quarter Panel Upper (23-23-39)
	12	6001 657	Retainer
	16	6001 647	Retainer
	18	---- ---	Nut
	2	6024 705	Seal
21	1	2480 080-1	MOULDING, Quarter Panel Wheel Opening (23-23-39)
	14	6024 271	Screw
22	1	2495 740-1	MOULDING PACKAGE, Body Side Sill, w/Cap (23-23-2)
	18	6001 492	Clip
	20	6023 975	Screw
23	2	2495 727	MOULDING PACKAGE, Door Outside Upper (23-23-32)
	4	6024 281	Screw
	4	6022 007	Seal
	2	---- ---	Nut
	14	6001 547	Clip
	2	6024 702	Seal

All Packages Include Attaching Parts

Part Type Code is Indicated in Parentheses

EXTERIOR VIEW - IMPERIAL Y-M CONVERTIBLE COUPE

MyMopar.com

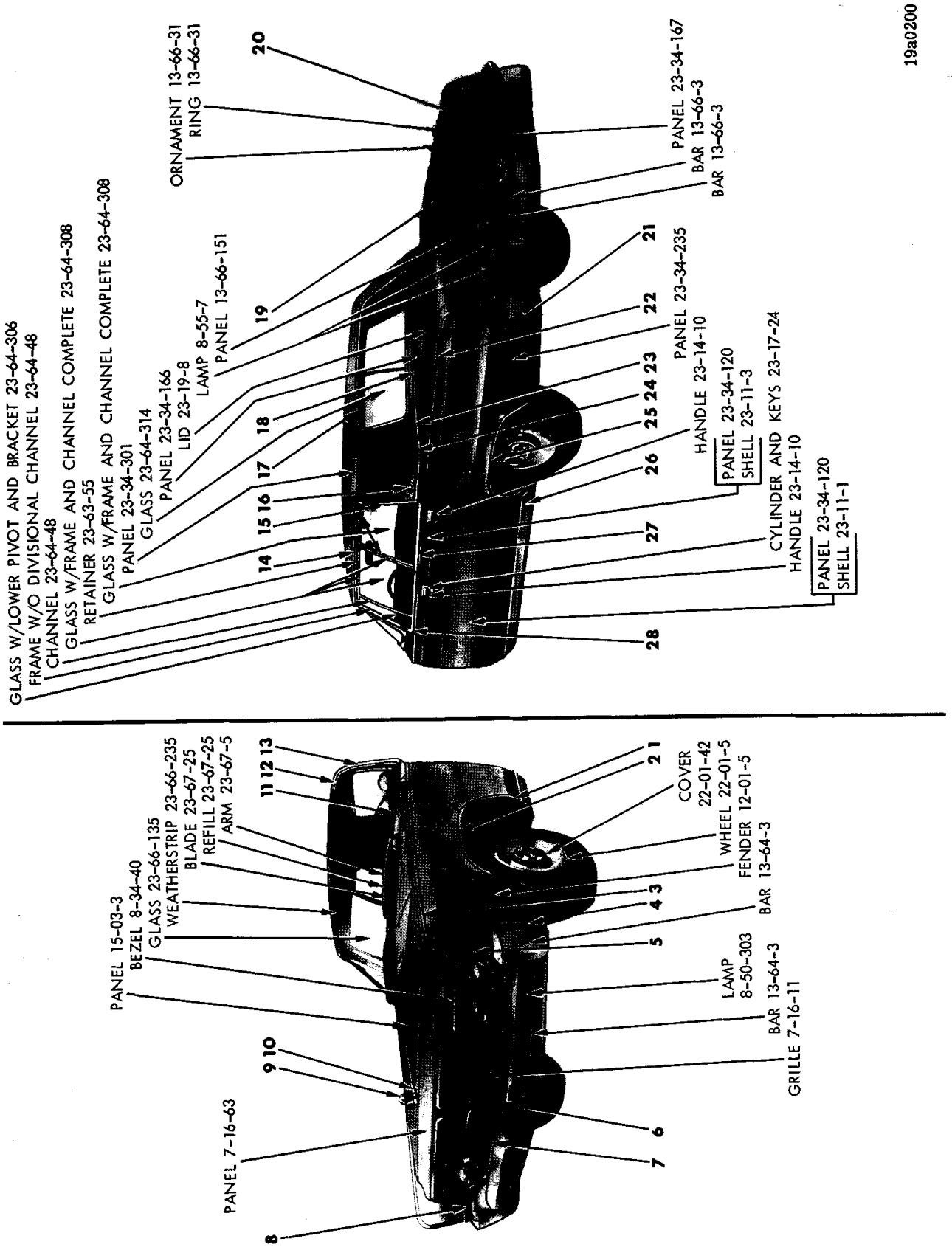

19a0200

EXTERIOR VIEW - IMPERIAL Y-H 4 DOOR HARDTOP

MyMopar.com

REF. NO.	QTY	PART NUMBER	DESCRIPTION
1	1	2445 054-5	CAP, Fender Wheel Opening to Sill Moulding (12-15-9)
	2	6024 271	Screw
2	1	2417 896-7	MOULDING, Fender Wheel Opening (12-15-2)
	14	6024 271	Screw
3	1	2495 150-1	MOULDING PACKAGE, Fender Top (12-15-2)
	16	6001 647	Retainer
	16	---- ---	Nut
	2	6001 547	Clip
4	1	2417 656-7	MOULDING PACKAGE, Fender Side Lower Front (12-15-2)
	14	9414 713	Screw
	6	9414 711	Screw
5	1	2448 598-9	MOULDING PACKAGE, Fender Front (12-15-2)
	4	6024 718	Seal
	4	6023 202	Nut
6	1	2449 737	CAP, Radiator Grille Lower Panel Moulding (7-16-44)
	2	9414 711	Screw
7	2	2449 736	MOULDING, Radiator Grille Lower Panel (7-16-36)
	6	9414 711	Screw
8	1	2495 250-1	MOULDING PACKAGE, Radiator Grille Lower Panel Side (7-16-36)
	2	6024 421	Screw
	2	---- ---	Washer
	4	---- ---	Nut
9	1	2417 893	ORNAMENT, Radiator Grille Panel Top (7-17-1)
	1	6023 202	Nut
10	1	2445 064	EXTENSION, Hood Panel, Radiator Grille Ornament Base (15-03-21)
		6023 202	Nut
11	1	2495 695	MOULDING PACKAGE, Windshield Outside Lower (23-23-65)
	10	6006 200	Clip
12	1	2492 039	MOULDING, Windshield Outside Upper (23-23-65)
	5	6001 553	Retainer and Screw
13	1	2492 040-1	MOULDING, Windshield Outside Side (23-23-65)
	2	180 077	Screw and Seal
	8	6024 373	Screw and Sealer
14	1	2480 528-9	MOULDING, Roof Drain Trough Side Front, w/o Vinyl Roof (23-59-61)
	4	6023 370	Screw
	1	2528 982-3	MOULDING, Roof Drain Trough Side Front, w/Vinyl Roof (23-59-61)
	4	6023 370	Screw
15	1	2529 078-9	MOULDING, Roof Side Drain Trough Rear, w/o Vinyl Roof (23-59-61)
	2	6023 370	Screw
	1	2483 784-5	MOULDING, Roof Side Drain Trough Rear, w/Vinyl Roof (23-59-61)
	2	6023 370	Screw
16	1	2480 882	NAME PLATE, Quarter Outside Inner Panel Upper Extension, "Le" (23-34-238)
	1	2480 883	NAME PLATE, Quarter Outside Inner Panel Upper Extension "Baron" (23-34-238)
	4	152 259	Nut
17	1	2492 046-7	MOULDING, Rear Window Outside Finish (23-23-52)
	18	6001 084	Retainer and Screw
18	1	2481 193	COVER, Deck Opening Upper Panel Extension Moulding Joint (23-23-41)
19	2	2480 759	LETTER "I", Deck Lid (23-19-114)
	1	2480 760	"M"
	1	2480 761	"P"
	1	2480 762	"E"
	1	2480 763	"R"
	1	2480 764	"A"
	1	2480 765	"L"
	16	6000 050	Clip
20	1	2582 017	NAME PLATE, Deck Lid "Le" (23-19-114)
	1	2582 018	NAME PLATE, Deck Lid "Baron" (23-19-114)
	4	152 259	Nut
21	1	2495 744-5	MOULDING PACKAGE, Quarter Outside Bumper Depression (23-23-39)
	6	6022 007	Seal
	6	6023 202	Nut
	2	6023 898	Screw
22	1	2495 738-9	MOULDING PACKAGE, Quarter Panel Upper (23-23-39)
	12	6001 476	Retainer
	14	6001 475	Retainer
	4	6000 505	Clip
23	1	2495 746-7	MOULDING PACKAGE, Deck Opening Upper Panel (23-23-31)
	2	6024 271	Screw
	10	6022 013	Seal
	10	9411 618	Nut
24	1	2495 742-3	MOULDING PACKAGE, Quarter Panel Belt (23-23-39)
	6	9411 618	Nut
	2	116 000	Nut
	6	6022 013	Seal
	2	6024 729	Seal
25	1	2480 080-1	MOULDING, Quarter Panel Wheel Opening (23-23-39)
	14	6024 271	Screw
26	1	2495 740-1	MOULDING PACKAGE, Body Side Sill, w/Cap (23-23-39)
	18	6001 492	Clip
	20	6023 975	Screw
27	1	2495 734-5	MOULDING PACKAGE, Rear Door Outside Upper (23-23-33)
	4	6000 505	Clip
	4	9417 621	Nut
	4	6022 007	Seal
	2	---- ---	Nut
28	1	2495 732-3	MOULDING PACKAGE, Front Door Outside Upper (23-23-32)
	6	6000 505	Clip
	4	9417 621	Nut
	4	6022 007	Seal
	2	---- ---	Nut

All Packages Include Attaching Parts

Part Type Code is Indicated in Parentheses

EXTERIOR VIEW - IMPERIAL Y-H 4 DOOR HARDTOP

MyMopar.com

PART NUMBER	CODE
2167 998	23-23-32
2167 999	23-23-32
2196 477	23-23-65
2196 478	23-23-65
2196 481	23-23-65
2196 482	23-23-65
2196 673	23-23-65
2196 674	23-23-65
2196 749	23-23-65
2216 036	23-23-33
2216 037	23-23-33
2216 944	23-23-32
2216 945	23-23-32
2216 946	23-23-32
2216 947	23-23-32
2216 950	23-23-33
2216 951	23-23-33
2217 014	23-23-33
2217 015	23-23-33
2218 444	23-23-32
2218 445	23-23-32
2218 594	23-23-65
2218 595	23-23-65
2218 596	23-23-65
2218 597	23-23-65
2244 374	23-23-73
2244 375	23-23-73
2244 376	23-23-73
2244 377	23-23-73
2255 936	23-59-61
2255 937	23-59-61
2255 948	23-23-31
2299 374	23-23-39
2299 399	23-23-39
2299 752	23-54-11
2404 734	13-66-31
2417 656	12-15-2
2417 657	12-15-2
2417 677	23-54-11
2417 678	23-54-11
2417 679	7-16-61
2417 680	23-54-11
2417 825	15-06-16
2417 826	15-06-16
2417 827	15-06-16
2417 828	15-06-16
2417 893	7-17-1
2417 896	12-15-2
2417 897	12-15-2
2421 577	23-23-60
2421 578	23-23-60
2421 579	23-23-60
2421 580	23-23-60
2421 912	23-23-2
2422 180	23-23-65
2422 181	23-23-65
2422 188	23-23-39
2422 189	23-23-39
2422 190	23-23-39
2422 191	23-23-39
2422 432	23-59-61
2422 433	23-59-61
2422 438	23-23-73
2422 439	23-23-73
2422 440	23-23-73
2422 441	23-23-73
2422 650	23-59-61
2422 651	23-59-61
2422 894	23-23-39
2422 895	23-23-39
2422 955	12-15-21
2423 548	23-23-39
2423 549	23-23-39
2424 106	23-23-65
2424 164	23-23-39
2424 165	23-23-39
2424 168	23-23-39
2424 169	23-23-39
2424 170	23-23-39
2424 171	23-23-39
2448 150	23-23-39
2448 151	23-23-39
⊟2448 176	23-23-39
⊟2448 177	23-23-39
2448 401	23-23-60
2448 414	23-23-39
2448 415	23-23-39
2448 430	23-23-32
2448 431	23-23-32
2448 432	23-23-39
2448 433	23-23-39
2448 453	23-23-39
2448 458	23-23-31
2448 459	23-23-31
2448 488	23-23-61
2448 540	23-23-32
2448 541	23-23-32
2448 598	12-15-2
2448 599	12-15-2
2449 700	7-17-1
2449 706	12-15-2
2449 707	12-15-2
2449 708	12-15-21
2449 709	12-15-21
2449 715	15-06-3
2449 727	12-15-21
2449 732	12-15-2
2449 733	12-15-2
2449 736	7-16-36
2449 861	15-03-18
2449 866	12-15-21
2449 868	12-15-21
2449 930	12-15-2
2449 931	12-15-2
2449 932	12-15-21
2449 934	12-15-21
2449 935	12-15-21
2449 936	12-15-21
2480 080	23-23-39
2480 081	23-23-39
2480 528	23-59-61
2480 529	23-59-61
2480 711	23-34-238
2480 712	23-34-238
2480 713	23-34-238
2480 714	23-34-238
2480 715	23-34-238
2480 716	23-34-334
2480 759	23-19-114
2480 760	23-19-114
2480 761	23-19-114
2480 762	23-19-114
2480 763	23-19-114
2480 764	23-19-114
2480 765	23-19-114
2480 770	23-23-39
2480 771	23-23-39
2480 882	23-19-114
2480 883	23-19-114
2480 916	23-23-73
2480 917	23-23-73
2480 918	23-23-52
2480 919	23-23-52
2480 922	23-23-52
2480 976	23-23-60
2480 977	23-23-60
2481 050	23-23-42
2481 051	23-23-42
2481 210	23-23-49
2481 211	23-23-49
2481 844	23-23-14
2481 845	23-23-14
2482 898	23-33-65
2482 899	23-33-65
2483 436	23-59-61
2483 437	23-59-61
2483 445	23-34-238
2483 446	23-19-118
2483 782	23-59-61
2483 784	23-59-61
2483 785	23-59-61
2483 848	23-23-39
2483 849	23-23-39
2484 162	23-59-61
2484 163	23-59-61
2484 380	23-23-50
2484 381	23-23-50
2484 406	23-23-65
2484 407	23-23-65
2484 424	23-59-61
2484 425	23-59-61
2484 558	23-23-73
2484 559	23-23-73
2484 602	23-23-65
2484 603	23-23-65
2484 756	23-23-60
2484 757	23-23-60
2486 686	23-54-11
2491 014	23-23-65
2491 015	23-23-65
2491 016	23-23-65
2491 017	23-23-65
2491 716	23-23-32
2491 717	23-23-32
2492 039	23-23-65
2492 040	23-23-65
2492 041	23-23-65
2492 046	23-23-52
2492 047	23-23-52
2492 712	23-23-65
2492 713	23-23-65
2492 782	23-23-32
2492 783	23-23-32
2492 784	23-23-32
2492 785	23-23-32
2492 790	23-23-33
2492 791	23-23-33
2492 796	23-23-33
2492 797	23-23-33
2492 798	23-23-33
2492 799	23-23-33
2492 800	23-23-33
2492 801	23-23-33
2492 806	23-23-33
2492 807	23-23-33
2492 808	23-23-33
2492 809	23-23-33
2495 150	12-15-2
2495 151	12-15-2
2495 250	7-16-36
2495 251	7-16-36
2495 269	23-23-52
2495 274	23-23-52
2495 275	23-23-52
2495 276	23-23-52
2495 277	23-23-52
2495 279	23-23-52
2495 284	23-23-52
2495 285	23-23-52
2495 286	23-23-52
2495 318	23-23-32
2495 319	23-23-32
2495 320	23-23-39
2495 321	23-23-39
2495 360	23-23-39
2495 361	23-23-39
2495 366	23-23-39
2495 367	23-23-39
2495 368	23-23-39
2495 372	23-23-39
2495 373	23-23-39
2495 374	23-23-39
2495 375	23-23-39
2495 376	23-23-39
2495 377	23-23-39
2495 408	23-23-39
2495 409	23-23-39
2495 695	23-23-65
2495 727	23-23-32
2495 732	23-23-32
2495 733	23-23-32
2495 734	23-23-33
2495 735	23-23-33
2495 736	23-23-39
2495 737	23-23-39
2495 738	23-23-39
2495 739	23-23-39
2495 740	23-23-2
2495 741	23-23-2
2495 742	23-23-39
2495 743	23-23-39
2495 744	23-23-39
2495 745	23-23-39
2495 746	23-23-31
2495 747	23-23-31
2495 752	23-23-52
2495 753	23-23-52
2495 754	23-23-39
2495 755	23-23-39
2495 900	23-59-61
2495 901	23-59-61
2495 902	23-59-61
2495 903	23-59-61
2524 007	15-03-18
2524 008	12-15-21
2524 054	12-15-21
2524 200	15-03-18
2524 206	12-15-2
2524 207	12-15-2
2524 208	12-15-21
2524 209	23-19-114
2524 226	23-19-114
2524 233	12-15-21
2524 237	15-03-18
2524 239	12-15-21
2524 241	12-15-21
2524 258	15-25-2
2524 265	7-17-1
2524 268	7-17-1
2524 270	15-06-16
2524 271	15-06-16
2524 272	15-06-16
2524 273	15-06-16
2524 274	15-06-16
2524 275	15-06-16
2524 276	15-06-16
2524 286	12-15-2
2524 287	12-15-2
2524 527	15-25-2
2524 723	12-15-21
2524 786	12-15-2
2524 787	12-15-2
2524 859	15-06-3

MyMopar.com

PART NUMBER	CODE
2524 912. . . .	7-17-1
2524 942. . .	12-15-21
2524 943. . .	12-15-21
2525 556. . .	23-59-61
2525 557. . .	23-59-61
⊟2525 582. . .	23-23-39
⊟2525 583. . .	23-23-39
2525 587. . .	15-25-2
2525 592. . .	23-23-52
2525 593. . .	23-23-52
2525 594. . .	23-23-52
2525 595. . .	23-23-50
2525 596. . .	23-23-52
2525 597. . .	23-23-52
2525 598. . .	23-23-52
2525 599. . .	23-23-52
2525 800. . .	12-15-2
2525 801. . .	12-15-2
2525 804. . .	12-15-2
2525 805. . .	12-15-2
2525 806. . .	12-15-2
2525 807. . .	12-15-2
2525 808. . .	12-15-2
2525 809. . .	12-15-2
2525 810. . .	12-15-2
2525 811. . .	12-15-2
2525 814. . .	12-15-2
2525 815. . .	12-15-2
2525 816. . .	23-23-61
2525 817. . .	23-23-30
2525 818. . .	23-23-61
2525 819. . .	23-23-61
2525 820. . .	12-15-2
2525 821. . .	12-15-2
2525 822. . .	12-15-2
2525 823. . .	12-15-2
2525 824. . .	12-15-2
2525 825. . .	12-15-2
2525 826. . .	12-15-2
2525 828. . .	12-15-2
2525 829. . .	12-15-2
2525 830. . .	12-15-2
2525 831. . .	12-15-2
2525 832. . .	12-15-2
2525 833. . .	12-15-2
2525 834. . .	12-15-2
2525 835. . .	12-15-2
2525 836. . .	12-15-2
2525 837. . .	12-15-2
2525 838. . .	12-15-2
2525 839. . .	12-15-2
2525 840. . .	12-15-2
2525 841. . .	12-15-2
2525 842. . .	12-15-2
2525 843. . .	12-15-2
2525 847. . .	23-23-30
2525 950. . .	23-23-39
2525 951. . .	23-23-39
2525 959. . .	23-23-39
2525 964. . .	23-23-32
2525 965. . .	23-23-32
2525 966. . .	23-23-32
2525 967. . .	23-23-32
2525 968. . .	23-23-39
2525 969. . .	23-23-39
2525 970. . .	23-23-33
2525 971. . .	23-23-33
2525 972. . .	23-23-39
2525 973. . .	23-23-39
2525 974. . .	23-23-39
2525 975. . .	23-23-39
2525 976. . .	23-23-2
2525 977. . .	23-23-2
2525 978. . .	23-23-39
2525 979. . .	23-23-52
2525 980. . .	23-23-32
2525 981. . .	23-23-32
2525 982. . .	23-23-32
2525 983. . .	23-23-32
2525 984. . .	23-23-32
2525 985. . .	23-23-32
2525 986. . .	23-23-39
2525 987. . .	23-23-39
2525 988. . .	23-23-33
2525 989. . .	23-23-33
2525 990. . .	23-23-39
2525 991. . .	23-23-39
2525 992. . .	23-23-39
2525 993. . .	23-23-39
2525 994. . .	23-23-42
2525 995. . .	23-23-42
2525 996. . .	23-23-39
2525 997. . .	23-23-39
2525 998. . .	23-23-39
2525 999. . .	23-23-39
2526 056. .	23-19-114
2526 112. .	23-34-238
2526 113. .	23-34-238
2526 114. .	23-34-238
2526 115. .	23-34-238
2526 140. . .	23-59-61
2526 141. . .	23-59-61
2526 148. . .	23-59-61
2526 149. . .	23-59-61
2526 192. .	23-19-114
2526 194. .	23-19-114
2526 228. . .	23-23-39
2526 229. . .	23-23-39
2526 230. . .	23-23-39
2526 231. . .	23-23-39
2526 234. . .	23-11-23
2526 235. . .	23-11-23
2526 236. .	23-54-334
2526 250. .	23-34-238
2526 251. .	23-34-238
2526 252. .	23-34-238
2526 253. .	23-34-238
2526 262. . .	23-23-39
2526 263. . .	23-23-39
2526 266. .	23-19-114
2526 268. .	23-19-114
2526 340. .	23-19-114
2526 356. . .	23-23-39
2526 357. . .	23-23-39
2526 458. . .	23-23-39
2526 459. . .	23-23-39
2526 460. . .	23-23-39
2526 461. . .	23-23-39
2526 462. . .	23-59-61
2526 463. . .	23-59-61
2526 480. . .	23-59-61
2526 481. . .	23-59-61
2526 482. . .	23-59-61
2526 483. . .	23-59-61
2526 510. .	23-34-238
2526 512. . .	23-23-23
2526 530. . .	23-23-73
2526 531. . .	23-23-73
2526 532. . .	23-59-61
2526 533. . .	23-59-61
2526 540. . .	23-23-45
2526 541. . .	23-23-45
2526 730. .	23-19-114
2526 824. . .	23-23-31
2526 825. . .	23-23-31
2526 852. . .	23-23-42
2526 853. . .	23-23-42
2526 854. . .	23-23-42
2526 855. . .	23-23-42
2526 929. .	23-19-114
2526 930. .	23-19-114
2526 931. .	23-19-114
2526 932. .	23-19-114
2527 018. . .	23-23-39
2527 019. . .	23-23-39
2527 712. . .	23-23-28
2527 802. .	23-19-114
2527 984. . .	23-23-39
2527 985. . .	23-23-39
2528 002. . .	23-59-61
2528 003. . .	23-59-61
2528 092. .	23-34-334
2528 093. .	23-34-334
2528 315. .	23-19-114
2528 316. .	23-19-114
2528 317. .	23-19-114
2528 318. .	23-19-114
2528 319. . .	23-54-11
2528 320. . .	23-54-11
2528 321. . .	23-54-11
2528 322. . .	23-54-11
2528 323. . .	15-06-16
2528 324. . .	15-06-16
2528 325. . .	15-06-16
2528 326. . .	15-06-16
2528 327. . .	15-06-16
2528 328. . .	15-06-16
2528 329. . .	15-06-16
2528 330. . .	15-06-16
2528 332. . .	23-23-14
2528 333. . .	23-23-14
2528 402. . .	23-23-32
2528 403. . .	23-23-32
2528 449. .	23-19-114
2528 477. .	23-34-238
2528 512. .	23-34-184
2528 513. .	23-34-184
2528 514. .	23-34-184
2528 515. .	23-34-184
2528 562. . .	23-23-72
2528 563. .	23-23-72
2528 586. . .	23-23-39
2528 587. . .	23-23-39
2528 602. .	23-34-240
2528 603. .	23-34-240
2528 607. .	23-19-114
2528 648. .	23-19-114
2528 649. .	23-19-114
2528 650. .	23-19-114
2528 651. .	23-19-114
2528 652. .	23-19-114
2528 688. .	23-19-114
2528 788. . .	23-59-61
2528 789. . .	23-59-61
2528 795. . .	23-23-61
2528 858. .	23-34-184
2528 859. .	23-34-184
2528 974. .	23-19-114
2528 975. .	23-19-114
2528 976. .	23-19-114
2528 977. .	23-19-114
2528 978. .	23-19-114
2528 979. .	23-19-114
2528 980. .	23-19-114
2528 981. .	23-19-114
2528 982. . .	23-59-61
2528 983. . .	23-59-61
2529 076. . .	23-59-61
2529 077. . .	23-59-61
2529 078. . .	23-59-61
2529 079. . .	23-59-61
⊟2529 096. . .	23-23-73
⊟2529 097. . .	23-23-73
2529 112. . .	23-23-73
2529 113. . .	23-23-73
2529 144. . .	23-23-73
2529 145. . .	23-23-73
2529 264. . .	23-59-61
2529 265. . .	23-59-61
2529 438. . .	23-59-61
2529 439. . .	23-59-61
2529 440. . .	23-59-61
2529 441. . .	23-59-61
2529 442. . .	23-59-61
2529 443. . .	23-59-61
2529 444. . .	23-23-14
2529 445. . .	23-23-14
2529 924. . .	23-59-61
2529 925. . .	23-59-61
2570 060. . .	23-23-33
2570 061. . .	23-23-33
⊟2570 110. . .	23-23-16
⊟2570 111. . .	23-23-16
2571 170. . .	23-11-23
2571 171. . .	23-11-23
2571 172. . .	23-63-33
2571 173. . .	23-63-33
2571 176. . .	23-11-23
2571 177. . .	23-11-23
2571 178. . .	23-63-33
2571 179. . .	23-63-33
2571 180. . .	23-63-33
2571 181. . .	23-63-33
2571 182. . .	23-63-33
2571 183. . .	23-63-33
2571 184. . .	23-63-33
2571 185. . .	23-63-33
2573 002. . .	23-23-2
2573 003. . .	23-23-2
2573 096. . .	23-23-39
2573 097. . .	23-23-39
2573 204. . .	23-23-30
2573 222. . .	23-59-61
2573 223. . .	23-59-61
2573 230. . .	23-59-61
2573 231. . .	23-59-61
2573 568. . .	23-23-39
2573 569. . .	23-23-39
2573 608. . .	23-23-39
2573 609. . .	23-23-39
2573 612. . .	23-23-39
2573 613. . .	23-23-39
2573 618. .	23-34-334
2573 619. .	23-34-334
⊟2573 827. . .	23-23-28
2573 944. . .	23-59-61
2573 945. . .	23-59-61
2573 946. . .	23-59-61
2573 947. . .	23-59-61
2573 948. . .	23-23-42
2573 949. . .	23-23-42
2574 850. . .	23-23-14
2574 851. . .	23-23-14
⊟2578 548. . .	12-15-21
2578 627. . .	12-15-21
2578 630. . .	12-15-21
2578 632. . .	12-15-21
2578 640. . .	15-03-18
2578 641. . .	15-03-18
2578 730. . .	15-03-18
2578 733. . .	15-03-18
2578 734. . .	15-03-18

MyMopar.com

PART NUMBER	CODE
2578 735.	15-03-18
2578 736.	15-03-18
2578 737.	15-03-18
2578 739.	15-03-18
2578 742.	15-03-18
2578 743.	15-03-18
2579 258.	12-15-21
2579 259.	12-15-21
⊟2579 442.	12-15-21
2581 948.	23-34-340
⊟2583 215.	15-06-3
2584 000.	23-23-33
2584 001.	23-23-33
2584 002.	23-23-39
2584 003.	23-23-39
2584 004.	12-15-2
2584 005.	12-15-2
2584 006.	23-23-52
2584 007.	23-23-52
2584 008.	23-23-32
2584 009.	23-23-32
2584 010.	23-23-32
2584 011.	23-23-32
2584 012.	23-23-39
2584 013.	23-23-39
2584 014.	23-23-39
2584 015.	23-23-39
2584 016.	23-23-39
2584 017.	23-23-39
2584 018.	23-23-33
2584 019.	23-23-33
2584 020.	23-23-39
2584 021.	23-23-39
2584 026.	23-23-32
2584 027.	23-23-32
2584 028.	23-23-32
2584 029.	23-23-32
2584 030.	23-23-32
2584 031.	23-23-32
2584 032.	23-23-32
2584 033.	23-23-32
2584 034.	23-23-32
2584 035.	23-23-32
2584 036.	23-23-32
2584 037.	23-23-32
2584 038.	23-23-39
2584 039.	23-23-39
2584 040.	23-23-39
2584 041.	23-23-39
2584 042.	23-23-39
2584 043.	23-23-39
2584 044.	23-23-39
2584 045.	23-23-39
2584 046.	23-23-39
2584 047.	23-23-39
2584 048.	23-23-39
2584 049.	23-23-39
2584 050.	23-23-39
2584 051.	23-23-39
2584 052.	23-23-39
2584 053.	23-23-39
2584 054.	23-23-39
2584 055.	23-23-39
2584 056.	23-23-33
2584 057.	23-23-33
2584 058.	23-23-33
2584 059.	23-23-33
2584 060.	23-23-33
2584 061.	23-23-33
2584 063.	15-25-2
2584 064.	12-15-2
2584 065.	12-15-2
2584 066.	12-15-2
2584 067.	12-15-2
2584 068.	12-15-2
2584 069.	12-15-2
2584 070.	12-15-2
2584 071.	12-15-2
2584 072.	12-15-2
2584 073.	12-15-2
2584 074.	12-15-2
2584 075.	12-15-2
2584 076.	12-15-2
2584 077.	12-15-2
2584 078.	12-15-2
2584 079.	12-15-2
2584 080.	15-25-2
⊟2584 081.	23-23-41
2584 082.	23-23-31
2584 083.	23-23-31
2584 084.	23-23-39
2584 085.	23-23-39
2584 086.	23-23-39
2584 087.	23-23-39
2584 088.	23-23-39
2584 089.	23-23-39
2584 090.	23-23-30
2584 091.	23-23-30
2584 094.	23-23-61
2584 095.	23-23-61
2584 096.	23-23-61
2584 097.	23-23-61
2584 098.	23-23-52
2584 099.	23-23-65
2584 100.	23-23-52
2584 101.	23-23-52
2584 102.	23-23-52
2584 103.	23-23-52
2584 104.	23-23-65
2584 105.	23-23-2
2584 106.	23-23-65
2584 107.	23-23-65
2584 108.	23-23-65
2584 109.	23-23-65
2584 110.	23-23-65
2584 111.	23-23-65
2584 112.	12-15-2
2584 113.	12-15-2
2584 114.	12-15-2
2584 115.	12-15-2
2584 116.	12-15-2
2584 117.	12-15-2
2584 118.	12-15-2
2584 119.	12-15-2
2584 120.	12-15-2
2584 121.	12-15-2
2584 122.	12-15-2
2584 123.	12-15-2
2584 124.	12-15-2
2584 125.	12-15-2
2584 126.	23-23-30
2584 127.	23-23-30
2584 132.	23-23-32
2584 133.	23-23-32
2584 134.	23-23-32
2584 135.	23-23-32
2584 136.	23-23-32
2584 137.	23-23-32
2584 138.	23-23-32
2584 139.	23-23-32
2584 140.	23-23-32
2584 141.	23-23-32
2584 142.	23-23-39
2584 143.	23-23-39
2584 144.	23-23-39
2584 145.	23-23-39
2584 146.	23-23-39
2584 147.	23-23-39
2584 150.	23-23-33
2584 151.	23-23-33
2584 152.	23-23-39
2584 153.	23-23-39
2584 156.	23-23-39
2584 157.	23-23-39
2584 158.	23-23-2
2584 159.	23-23-2
2584 160.	23-23-39
2584 161.	23-23-39
2584 162.	23-23-33
2584 163.	23-23-33
2584 164.	23-23-39
2584 165.	23-23-39
2584 166.	23-23-33
2584 167.	23-23-33
2584 168.	23-23-39
2584 169.	23-23-39
2584 170.	23-23-39
2584 171.	23-23-39
2584 172.	23-23-42
2584 173.	23-23-42
2584 174.	23-23-42
2584 175.	23-23-42
2584 176.	23-23-42
2584 177.	23-23-42
2584 178.	23-23-42
2584 179.	23-23-42
2584 180.	23-23-42
2584 181.	23-23-42
2584 182.	23-23-23
2584 183.	23-23-30
2584 184.	23-23-30
2584 186.	23-23-23
2584 187.	23-23-23
2584 188.	23-23-61
2584 189.	23-23-61
2584 190.	23-23-61
2584 191.	23-23-61
2584 192.	23-23-42
2584 193.	23-23-42
2584 198.	23-23-39
2584 199.	23-23-39
2584 200.	23-23-73
2584 201.	23-23-73
2584 202.	23-23-73
2584 203.	23-23-73
2584 206.	23-23-39
2584 207.	23-23-39
2584 212.	23-23-32
2584 213.	23-23-32
2584 214.	23-23-32
2584 215.	23-23-32
⊟2584 216.	23-23-39
⊟2584 217.	23-23-39
2584 218.	23-23-39
2584 219.	23-23-39
2584 220.	23-23-39
2584 221.	23-23-39
2584 222.	23-23-39
2584 223.	23-23-39
2584 228.	23-23-39
2584 229.	23-23-39
2584 230.	23-23-39
2584 231.	23-23-39
2584 232.	23-23-39
2584 233.	23-23-39
2584 234.	23-23-32
2584 235.	23-23-32
2584 236.	23-23-32
2584 237.	23-23-32
2584 240.	23-23-32
2584 241.	23-23-32
2584 242.	23-23-32
2584 243.	23-23-32
2584 244.	23-23-32
2584 245.	23-23-32
2584 248.	23-23-33
2584 249.	23-23-33
2584 252.	23-23-33
2584 253.	23-23-33
2584 254.	23-23-39
2584 255.	23-23-39
2584 258.	23-23-33
2584 259.	23-23-33
2584 260.	23-23-39
2584 261.	23-23-39
2584 262.	23-23-39
2584 263.	23-23-39
2584 264.	23-23-39
2584 265.	23-23-39
2584 266.	23-23-32
2584 267.	23-23-32
2584 268.	23-23-32
2584 269.	23-23-32
2584 270.	23-23-33
2584 271.	23-23-33
2584 272.	23-23-39
2584 273.	23-23-39
2584 274.	23-23-39
2584 275.	23-23-39
2584 276.	23-23-39
2584 277.	23-23-39
⊟2584 278.	23-23-2
⊟2584 279.	23-23-2
2584 280.	23-23-2
2584 281.	23-23-2
2584 282.	23-23-2
2584 283.	23-23-2
2584 284.	23-23-39
2584 285.	23-23-39
2584 286.	23-23-39
2584 287.	23-23-39
2584 288.	23-23-39
2584 289.	23-23-39
2584 290.	23-23-39
2584 291.	23-23-39
2584 292.	23-23-39
2584 293.	23-23-39
2584 294.	23-23-39
2584 295.	23-23-39
2584 296.	23-23-39
2584 297.	23-23-39
2584 298.	23-23-32
2584 299.	23-23-32
2584 300.	23-23-32
2584 301.	23-23-32
2584 302.	23-23-32
2584 303.	23-23-32
2584 304.	23-23-32
2584 305.	23-23-32
2584 306.	23-23-32
2584 308.	23-23-33
2584 309.	23-23-33
2584 310.	23-23-32
2584 311.	23-23-32
2584 312.	23-23-33
2584 313.	23-23-33
2584 314.	23-23-33
2584 315.	23-23-33
2584 316.	23-23-39
2584 317.	23-23-39
2584 318.	23-23-33
2584 319.	23-23-33
2584 320.	23-23-39

MyMopar.com

PART NUMBER	CODE
2584 321.	23-23-39
2584 322.	23-23-39
2584 323.	23-23-39
2584 324.	23-23-33
2584 325.	23-23-33
2584 326.	23-23-39
2584 327.	23-23-39
2584 328.	23-23-32
2584 329.	23-23-32
2584 330.	23-23-32
2584 331.	23-23-32
2584 332.	23-23-32
2584 333.	23-23-32
2584 334.	23-23-32
2584 335.	23-23-32
2584 336.	23-23-32
2584 337.	23-23-32
2584 338.	23-23-32
2584 339.	23-23-32
2584 342.	23-23-32
2584 343.	23-23-32
2584 344.	23-23-32
2584 345.	23-23-32
2584 346.	23-23-32
2584 347.	23-23-32
2584 348.	23-23-32
2584 349.	23-23-32
2584 352.	23-23-39
2584 353.	23-23-39
2584 354.	23-23-39
2584 355.	23-23-39
2584 356.	23-23-39
2584 357.	23-23-39
2584 358.	23-23-39
2584 359.	23-23-39
2584 360.	23-23-39
2584 361.	23-23-39
2584 364.	23-23-39
2584 365.	23-23-39
2584 366.	23-23-39
2584 367.	23-23-39
2584 368.	23-23-39
2584 369.	23-23-39
2584 370.	23-23-39
2584 371.	23-23-39
2584 374.	23-23-39
2584 375.	23-23-39
2584 378.	23-23-39
2584 379.	23-23-39
2584 380.	23-23-39
2584 381.	23-23-39
2584 384.	23-23-33
2584 385.	23-23-33
2584 386.	23-23-33
2584 387.	23-23-33
2584 388.	23-23-32
2584 389.	23-23-32
2584 390.	23-23-32
2584 391.	23-23-32
2584 394.	23-23-33
2584 395.	23-23-33
2584 396.	23-23-32
2584 397.	23-23-32
2584 398.	23-23-32
2584 399.	23-23-32
2584 400.	23-23-39
2584 401.	23-23-39
2584 402.	23-23-33
2584 403.	23-23-33
2584 404.	23-23-39
2584 405.	23-23-39
2584 406.	23-23-33
2584 407.	23-23-33
2584 408.	23-23-39
2584 409.	23-23-39
2584 410.	23-23-39
2584 411.	23-23-39
2584 414.	23-23-39
2584 415.	23-23-39
2584 416.	23-23-39
2584 417.	23-23-39
2584 418.	23-23-39
2584 419.	23-23-39
2584 420.	23-23-39
2584 421.	23-23-42
2584 422.	23-23-42
2584 423.	23-23-42
2584 424.	23-23-42
2584 425.	23-23-42
2584 426.	23-23-41
2584 427.	23-23-41
2584 428.	23-23-42
2584 429.	23-23-42
2584 430.	23-23-42
2584 431.	23-23-42
2584 432.	23-23-42
2584 433.	23-23-42
2584 434.	23-23-42
2584 435.	23-23-42
2584 436.	23-23-42
2584 437.	23-23-42
2584 438.	23-23-42
2584 439.	23-23-42
2584 440.	23-23-73
2584 441.	23-23-73
2584 442.	23-23-42
2584 443.	23-23-42
2584 444.	23-23-60
2584 445.	23-23-60
2584 446.	23-23-60
2584 447.	23-23-60
2584 448.	23-23-73
2584 449.	23-23-73
2584 450.	23-23-73
2584 451.	23-23-73
2584 452.	23-23-33
2584 453.	23-23-33
2584 454.	23-23-33
2584 455.	23-23-33
2584 456.	23-23-33
2584 457.	23-23-33
2584 458.	23-23-33
2584 459.	23-23-33
2584 460.	23-23-33
2584 461.	23-23-33
2584 462.	23-23-33
2584 463.	23-23-33
2584 464.	23-23-42
2584 465.	23-23-42
2584 466.	23-23-30
2584 472.	12-15-2
2584 473.	12-15-2
2584 474.	23-23-61
2584 475.	23-23-61
2584 476.	23-23-2
2584 478.	23-23-2
2584 479.	23-23-2
2584 480.	23-23-39
2584 481.	23-23-39
2584 484.	23-23-39
2584 485.	23-23-39
2584 486.	23-23-39
2584 487.	23-23-39
2584 488.	12-15-2
2584 489.	12-15-2
2584 490.	12-15-2
2584 491.	12-15-2
2584 494.	23-23-42
2584 495.	23-23-42
2584 496.	23-23-42
2584 497.	23-23-42
2584 498.	23-23-42
2584 499.	23-23-42
2584 512.	23-23-33
2584 513.	23-23-33
2584 520.	23-23-33
2584 521.	23-23-33
2584 522.	23-23-42
2584 523.	23-23-42
⊟2584 524.	23-34-240
⊟2584 525.	23-34-240
2584 526.	23-23-32
2584 527.	23-23-32
2584 528.	23-23-42
2584 529.	23-23-42
2584 530.	23-23-39
2584 531.	23-23-39
2584 532.	23-23-39
2584 533.	23-23-39
⊟2584 534.	7-17-1
⊟2584 535.	7-17-1
2584 536.	7-17-1
2584 537.	7-17-1
2584 641.	23-54-160
2584 642.	23-23-42
2584 643.	23-23-42
⊟2585 984.	23-23-39
⊟2585 985.	23-23-39
⊟2586 106.	23-23-42
2602 116.	23-59-61
2602 117.	23-59-61
2602 446.	23-23-32
2602 447.	23-23-32
⊟2603 870.	23-59-61
⊟2603 871.	23-59-61
⊟2603 946.	23-59-61
⊟2603 947.	23-59-61
⊟2603 948.	23-59-61
⊟2603 949.	23-59-61
⊟2605 010.	23-59-61
⊟2605 011.	23-59-61
⊟2605 012.	23-59-61
⊟2605 013.	23-59-61
⊟2605 016.	23-59-61
⊟2605 017.	23-59-61
⊟2605 018.	23-59-61
⊟2605 019.	23-59-61
⊟2605 020.	23-59-61
⊟2605 021.	23-59-61
⊟2605 060.	23-59-61
⊟2605 061.	23-59-61
⊟2807 134.	23-23-52
⊟2807 135.	23-23-52
⊟2807 136.	23-23-52
⊟2807 137.	23-23-52
⊟2807 138.	23-23-52
⊟2807 139.	23-23-52
⊟2807 140.	23-23-52
⊟2807 141.	23-23-52

MyMopar.com

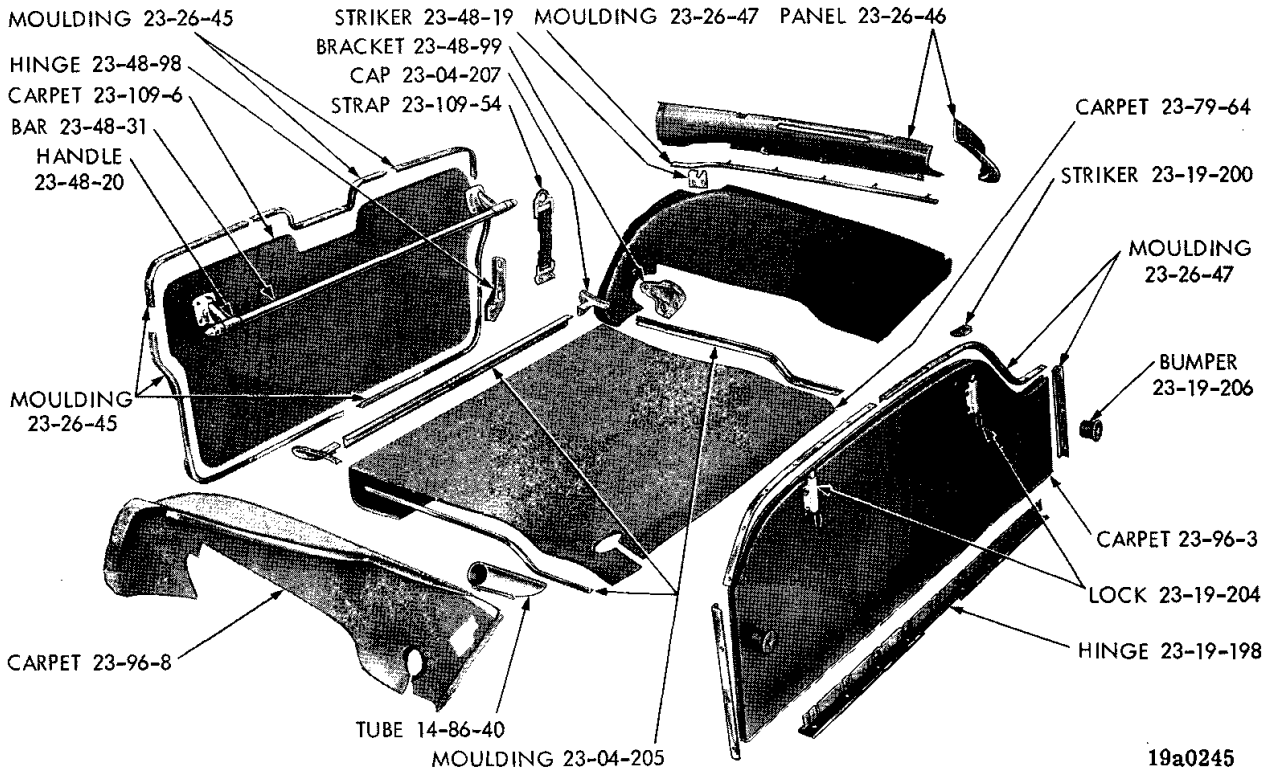

FOLDING SEAT BACK AND SECURITY PANEL AND LOCKS - VALIANT BARRACUDA

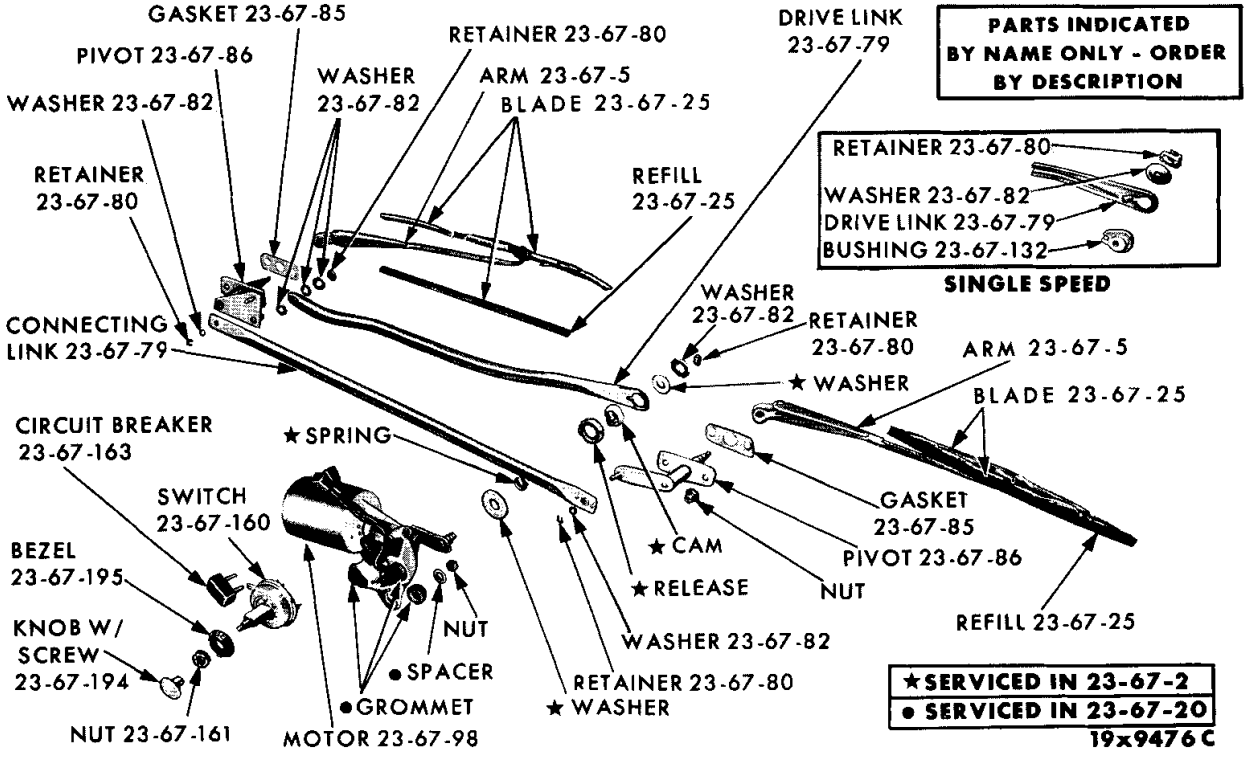

WINDSHIELD WIPER - VALIANT AND DART

MyMopar.com

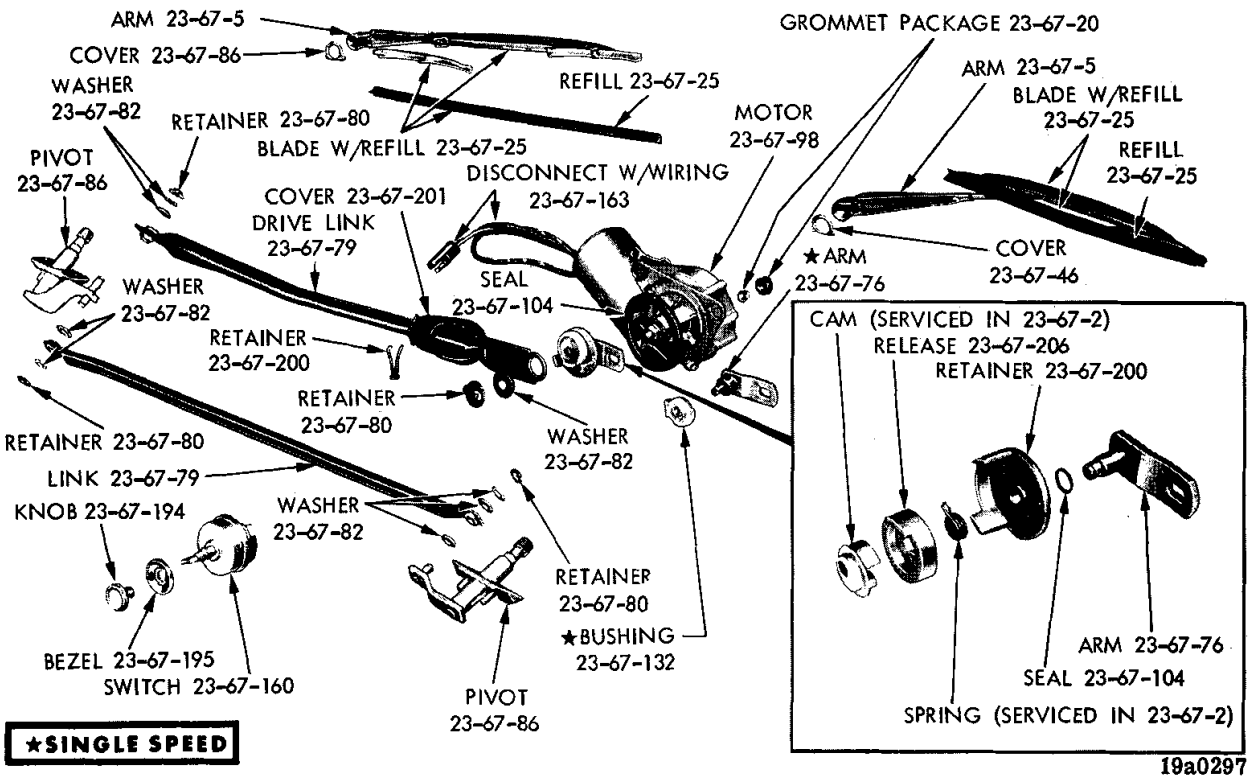

WINDSHIELD WIPER - PLYMOUTH, DODGE AND CHRYSLER

NOTES

MyMopar.com

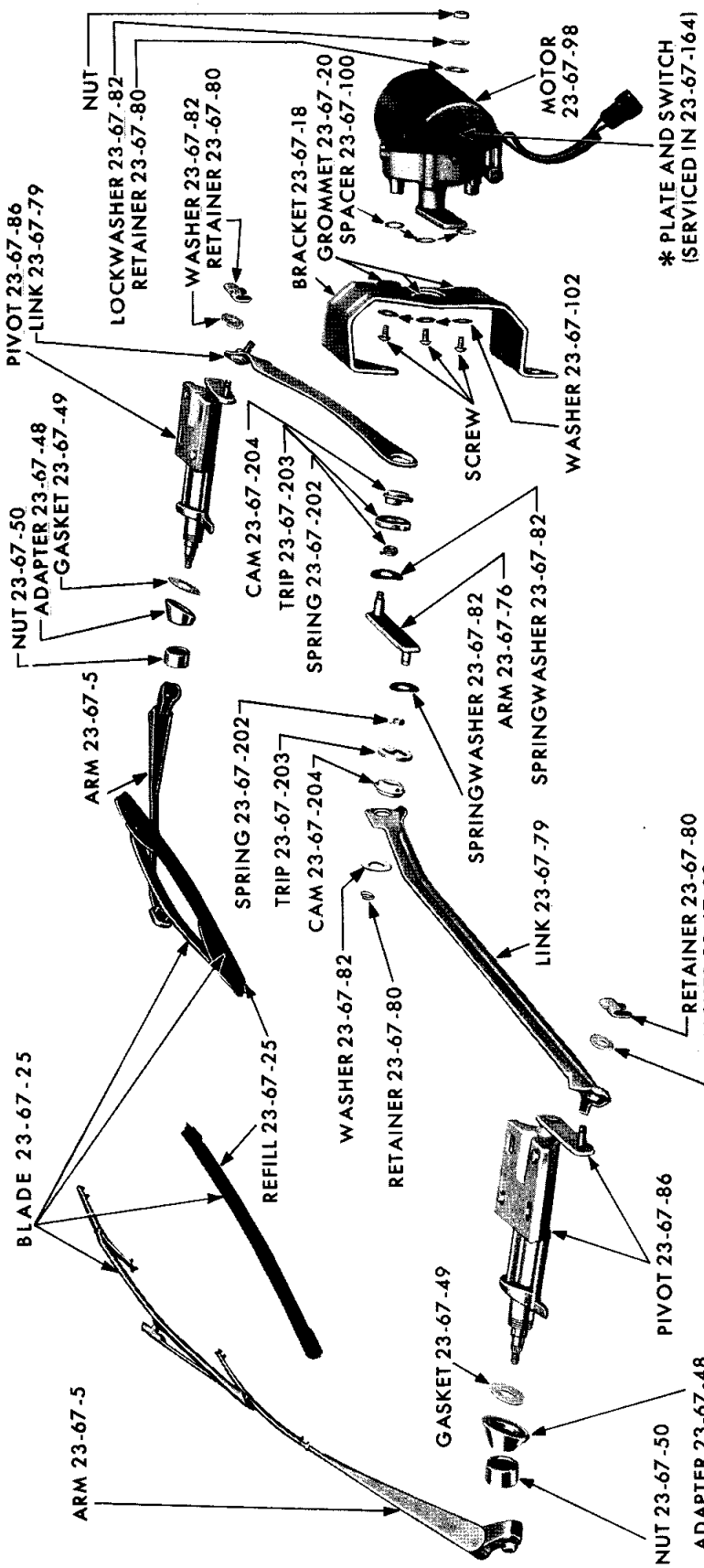

WINDSHIELD WIPER - IMPERIAL

MyMopar.com

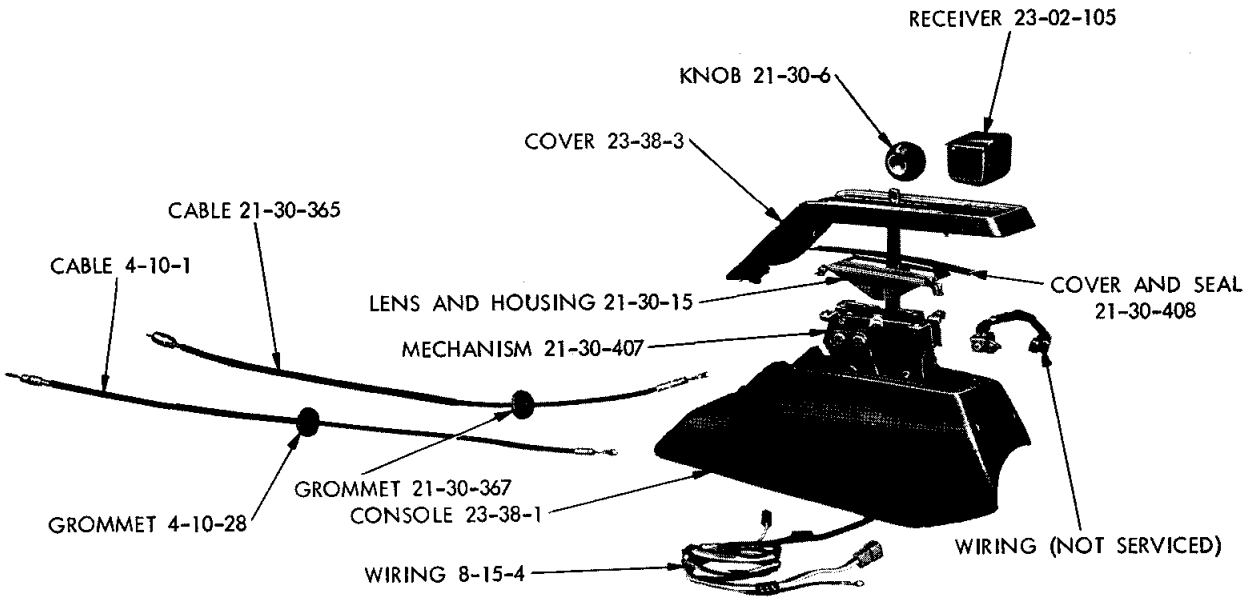

19a0275

CONSOLE - VALIANT AND DART

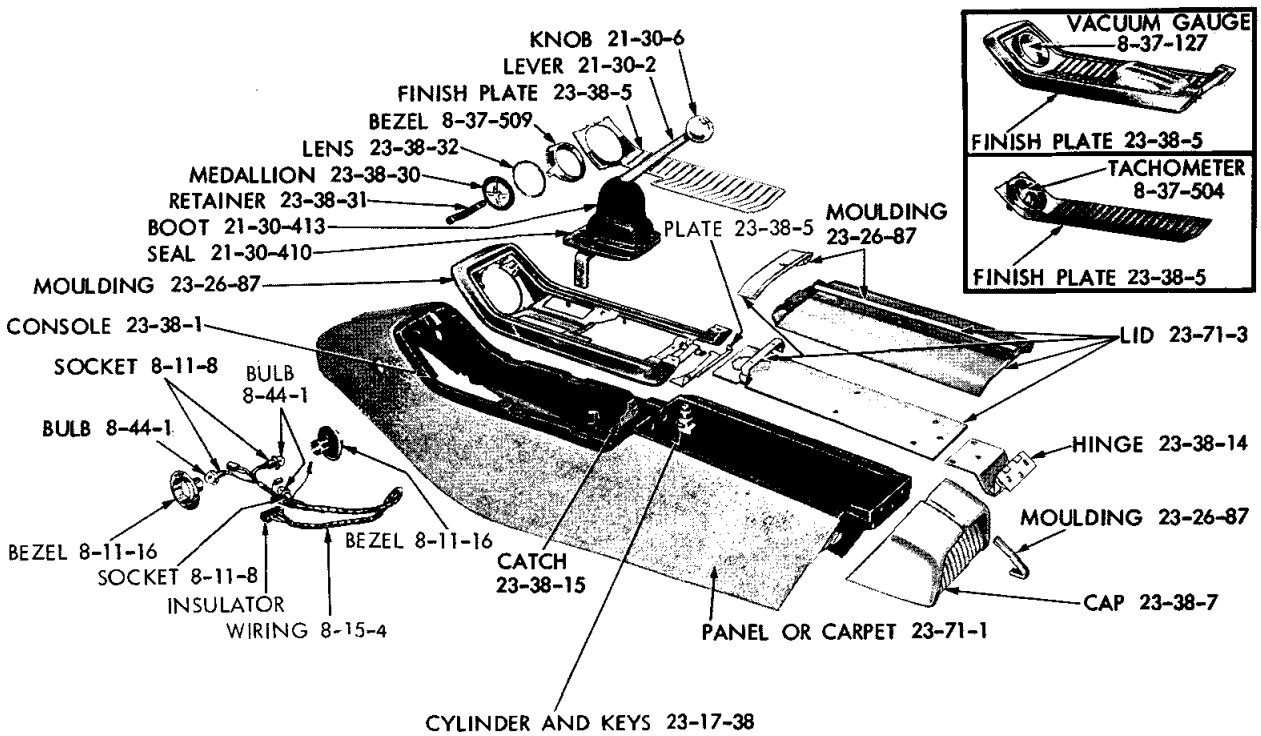

19a0290

CONSOLE - BELVEDERE, PLYMOUTH AND CORONET

MyMopar.com

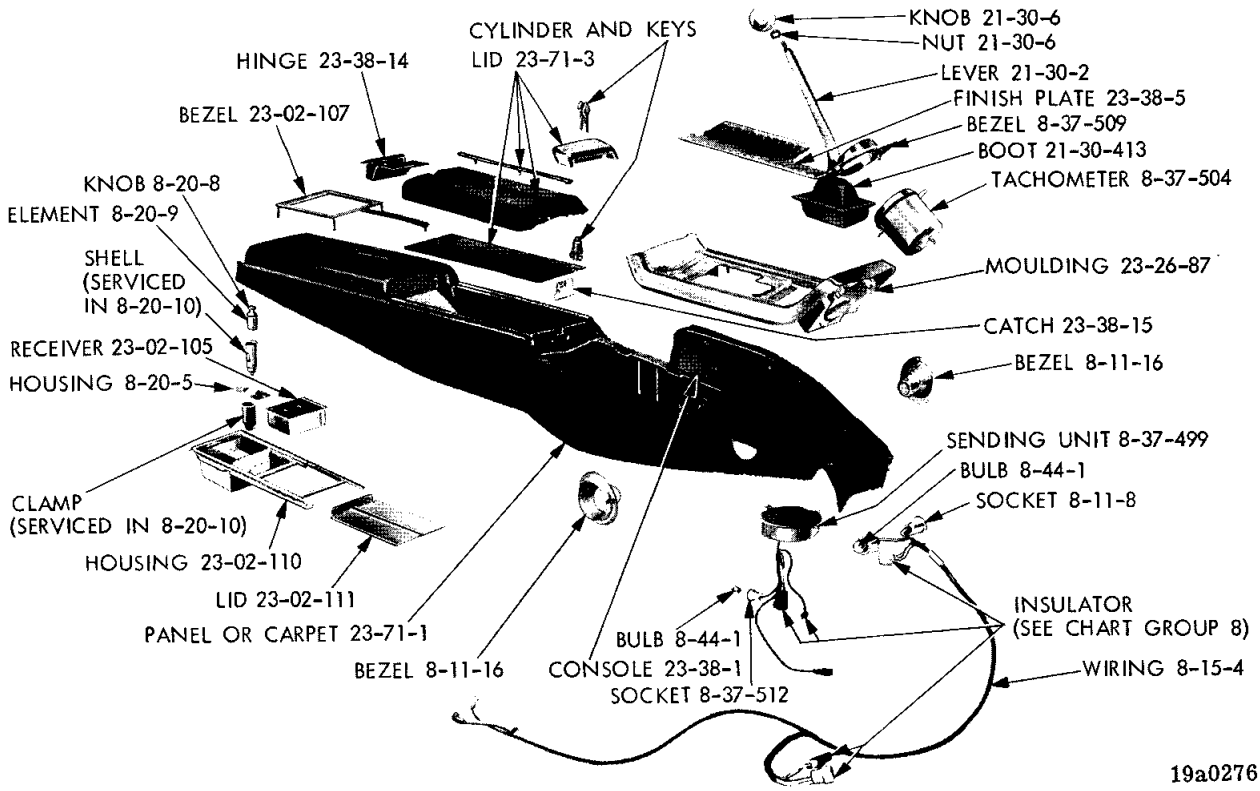

CONSOLE - DODGE MONACO (4 SPEED)

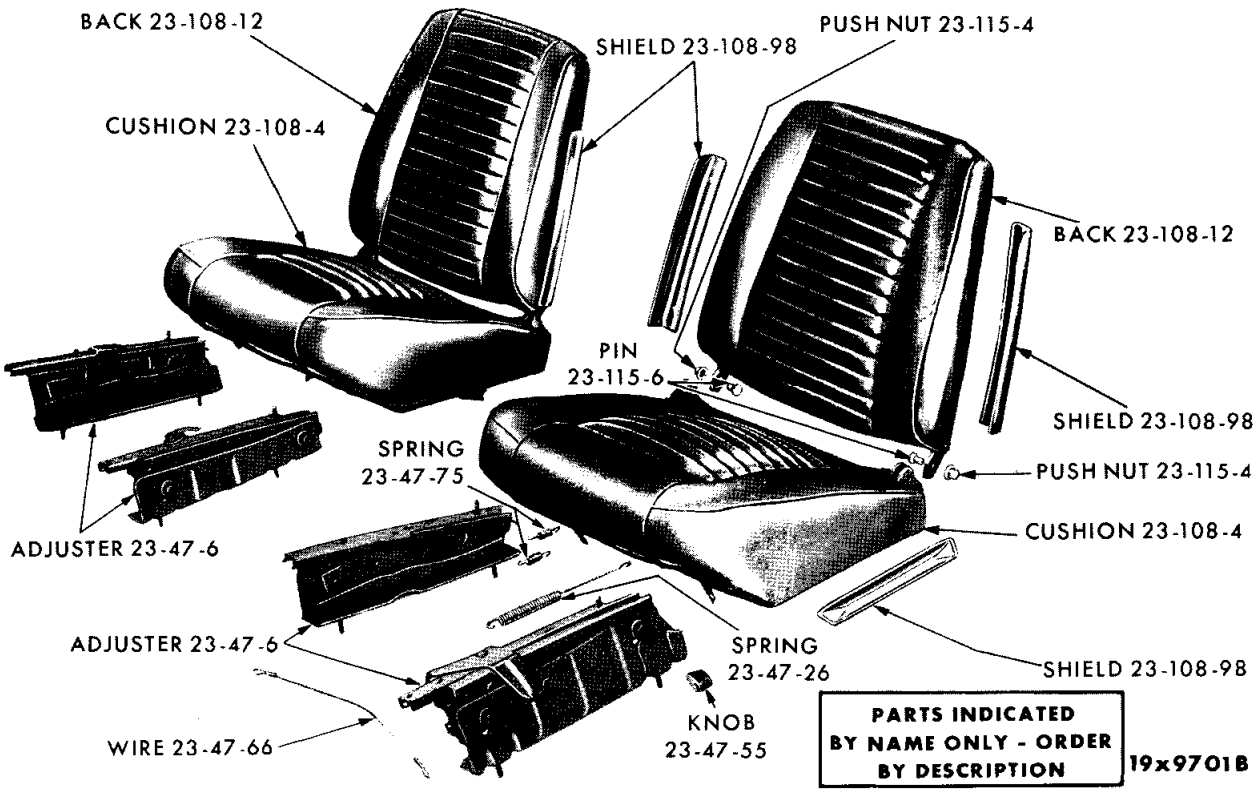

MANUAL BUCKET SEATS - VALIANT AND DART

MyMopar.com

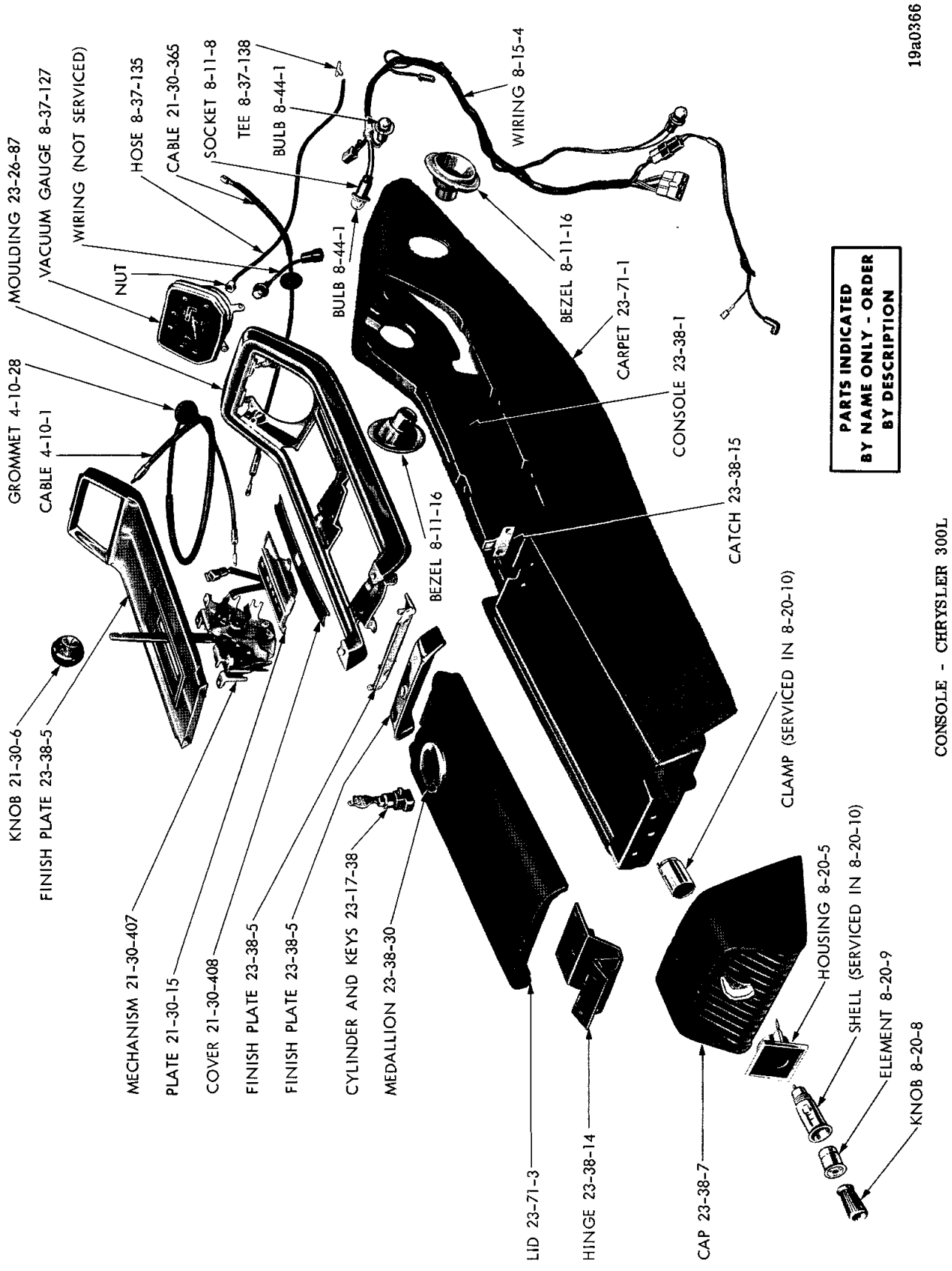
19a0366
MOULDING 23-26-87
VACUUM GAUGE 8-37-127
WIRING (NOT SERVICED)
HOSE 8-37-135
CABLE 21-30-365
SOCKET 8-11-8
TEE 8-37-138
BULB 8-44-1
WIRING 8-15-4
NUT
BULB 8-44-1
BEZEL 8-11-16
CARPET 23-71-1
CONSOLE 23-38-1
GROMMET 4-10-28
CABLE 4-10-1
BEZEL 8-11-16
CATCH 23-38-15
PARTS INDICATED BY NAME ONLY - ORDER BY DESCRIPTION
CLAMP (SERVICED IN 8-20-10)
KNOB 21-30-6
FINISH PLATE 23-38-5
MECHANISM 21-30-407
PLATE 21-30-15
COVER 21-30-408
FINISH PLATE 23-38-5
FINISH PLATE 23-38-5
CYLINDER AND KEYS 23-17-38
MEDALLION 23-38-30
HOUSING 8-20-5
SHELL (SERVICED IN 8-20-10)
ELEMENT 8-20-9
KNOB 8-20-8
LID 23-71-3
HINGE 23-38-14
CAP 23-38-7
CONSOLE - CHRYSLER 300L

MyMopar.com

CODE	PART NAME AND DESCRIPTION	PER CAR	VALIANT / DART	PLYMOUTH BELVEDERE / DODGE CORONET	PLYMOUTH FURY / DODGE POLARA / CHRYSLER	IMPERIAL

NOTES

TYPE LETTERS Indicate: V - Valiant, L - Dart, R - Belvedere, W - Coronet, P - Plymouth, D - Dodge, C - Chrysler, Y - Imperial

★Indicates use as required. Numerals in parentheses indicate footnotes. Printed in U.S.A.

⊟Indicates parts not listed in any previous parts book. Prices and specifications subject to change without notice.

MyMopar.com

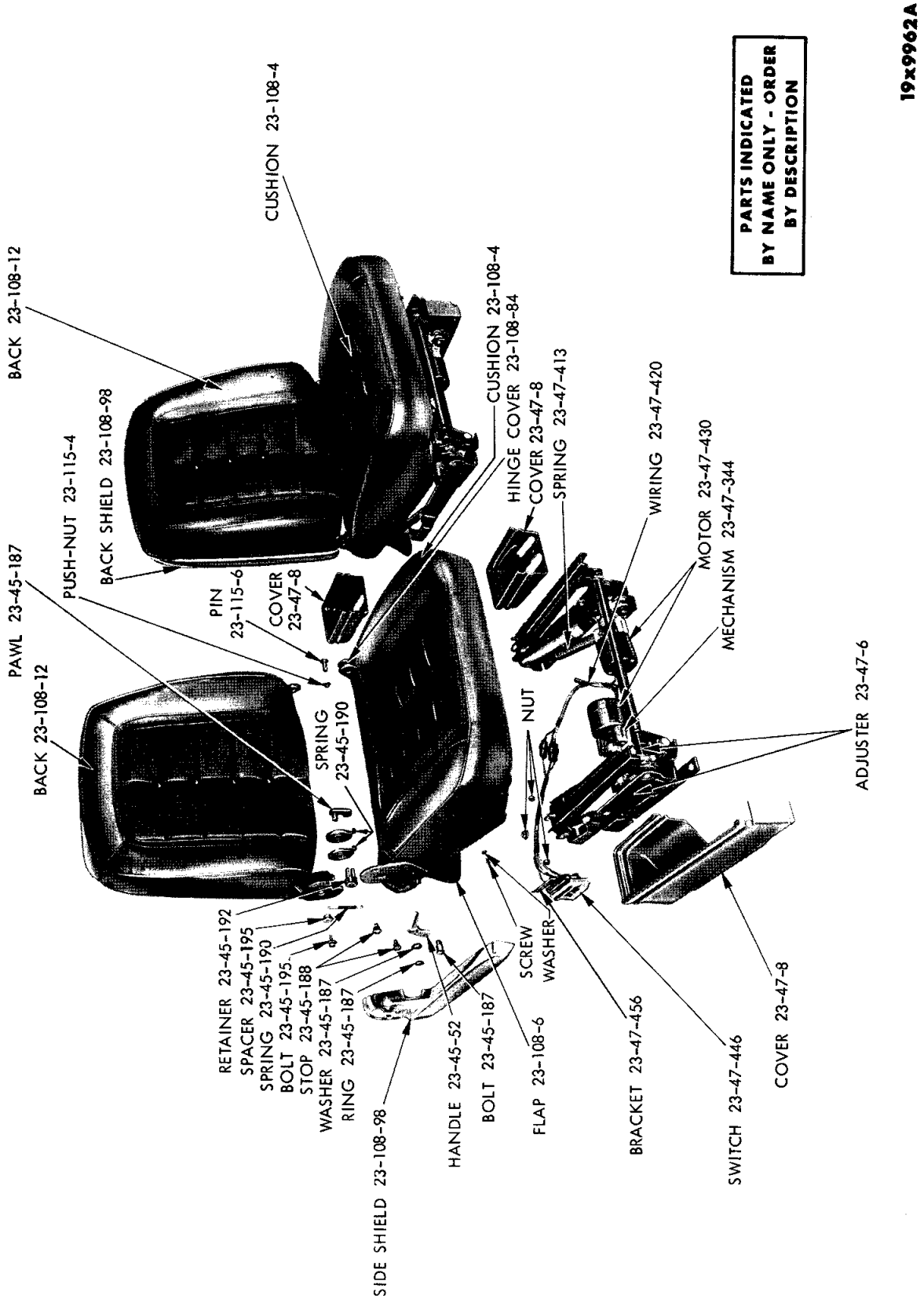

ELECTRIC BUCKET SEATS (RECLINING TYPE)

MyMopar.com

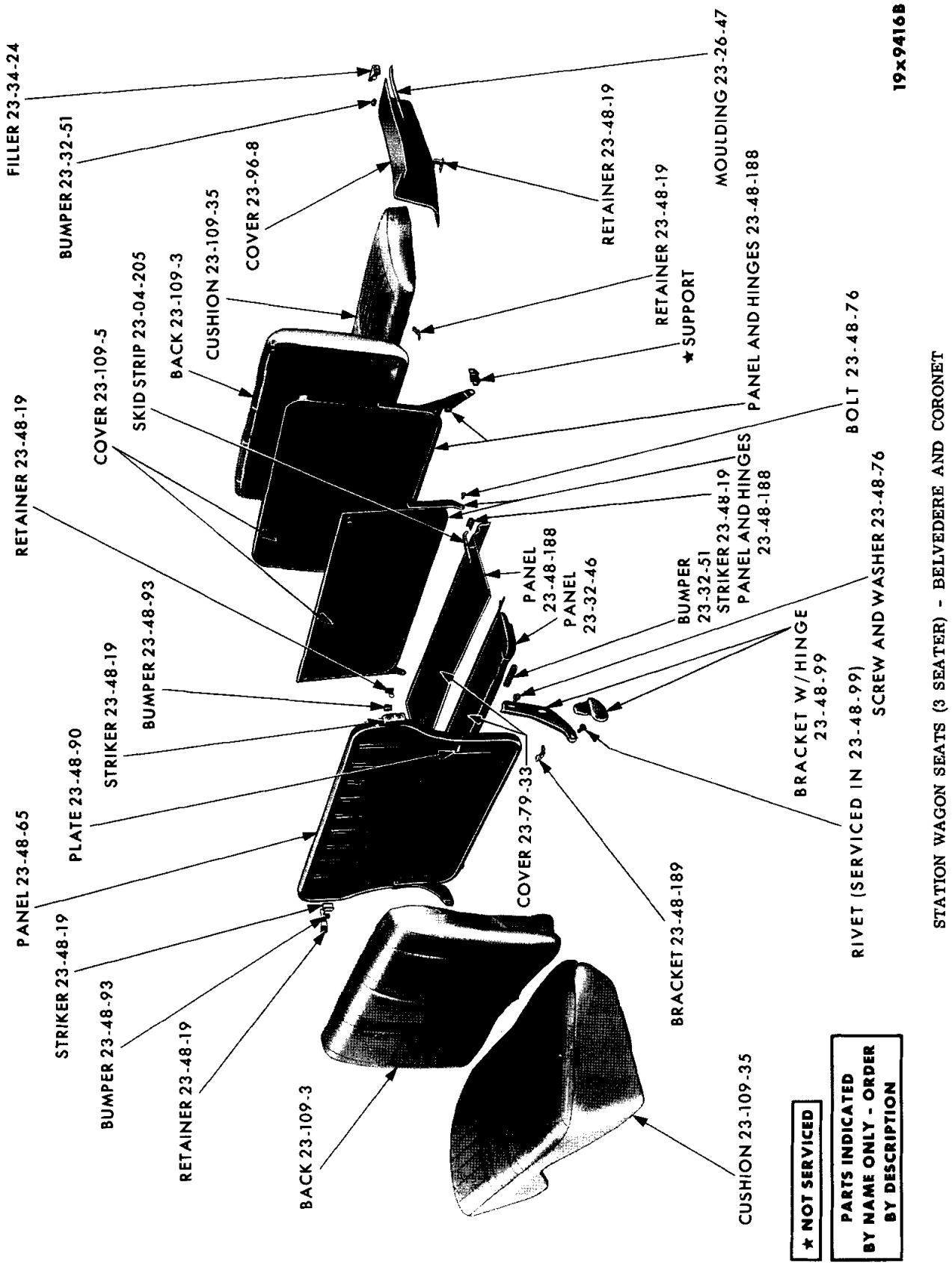

STATION WAGON SEATS (3 SEATER) - BELVEDERE AND CORONET

MyMopar.com

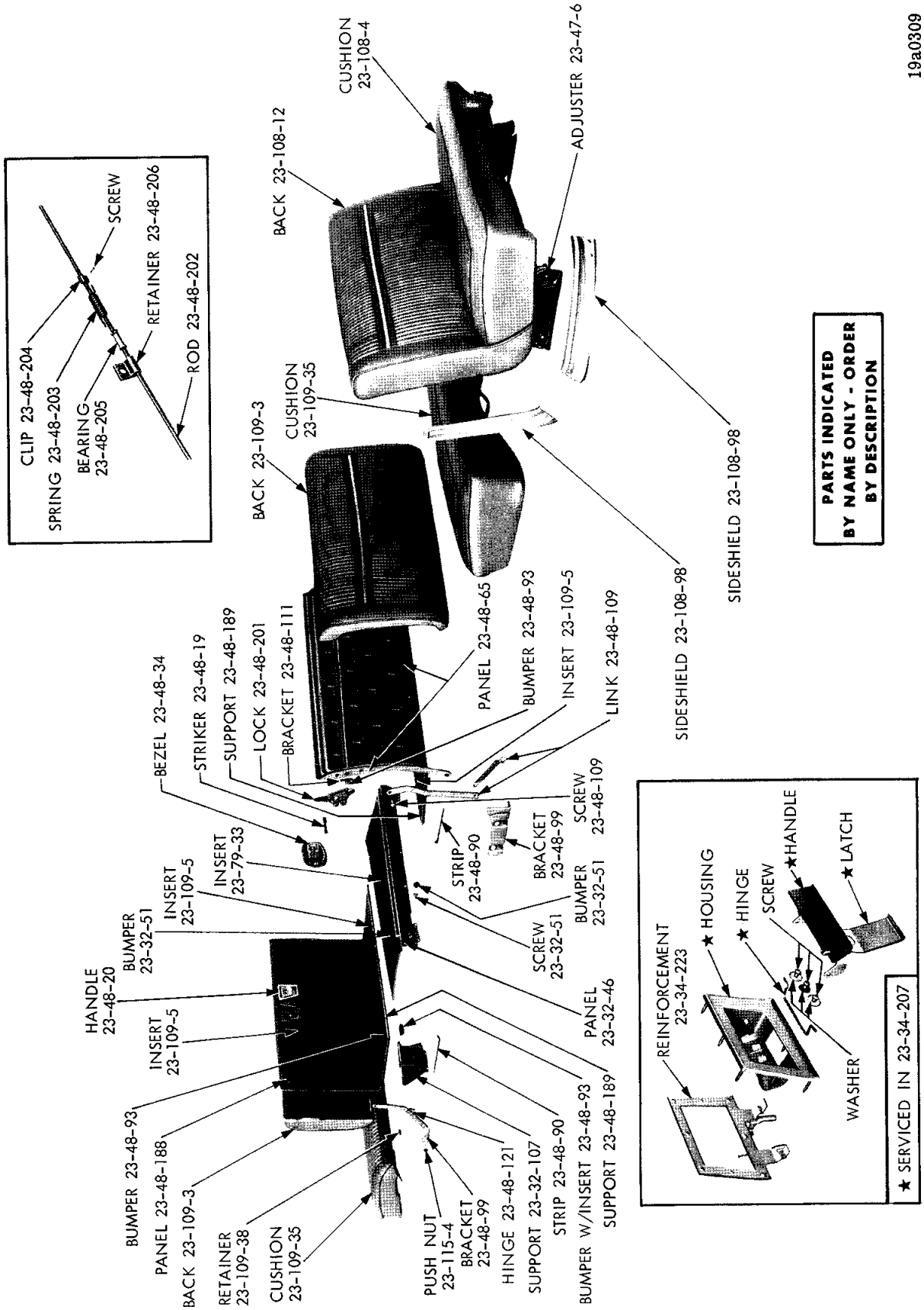

STATION WAGON SEATS (3 SEATER) - PLYMOUTH, DODGE AND CHRYSLER

MyMopar.com

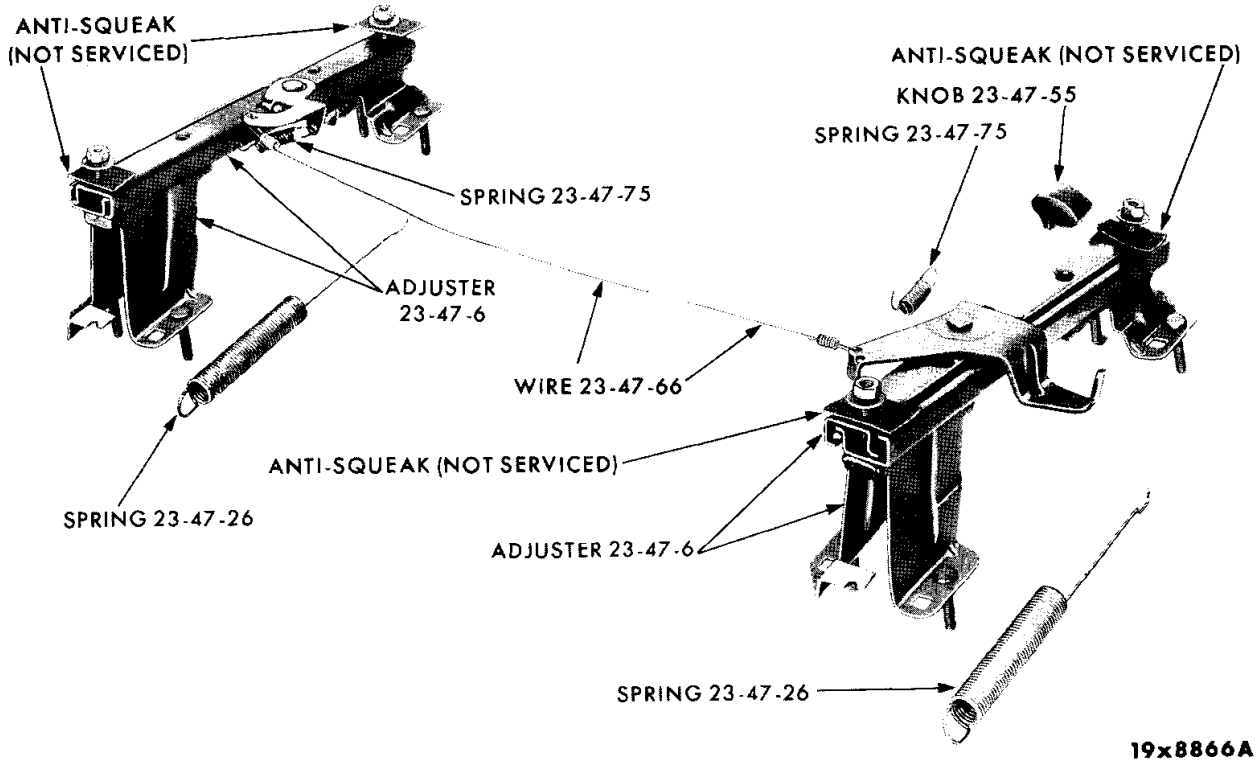

MANUAL SEAT ADJUSTER - VALIANT AND DART (WITHOUT BUCKET SEATS)

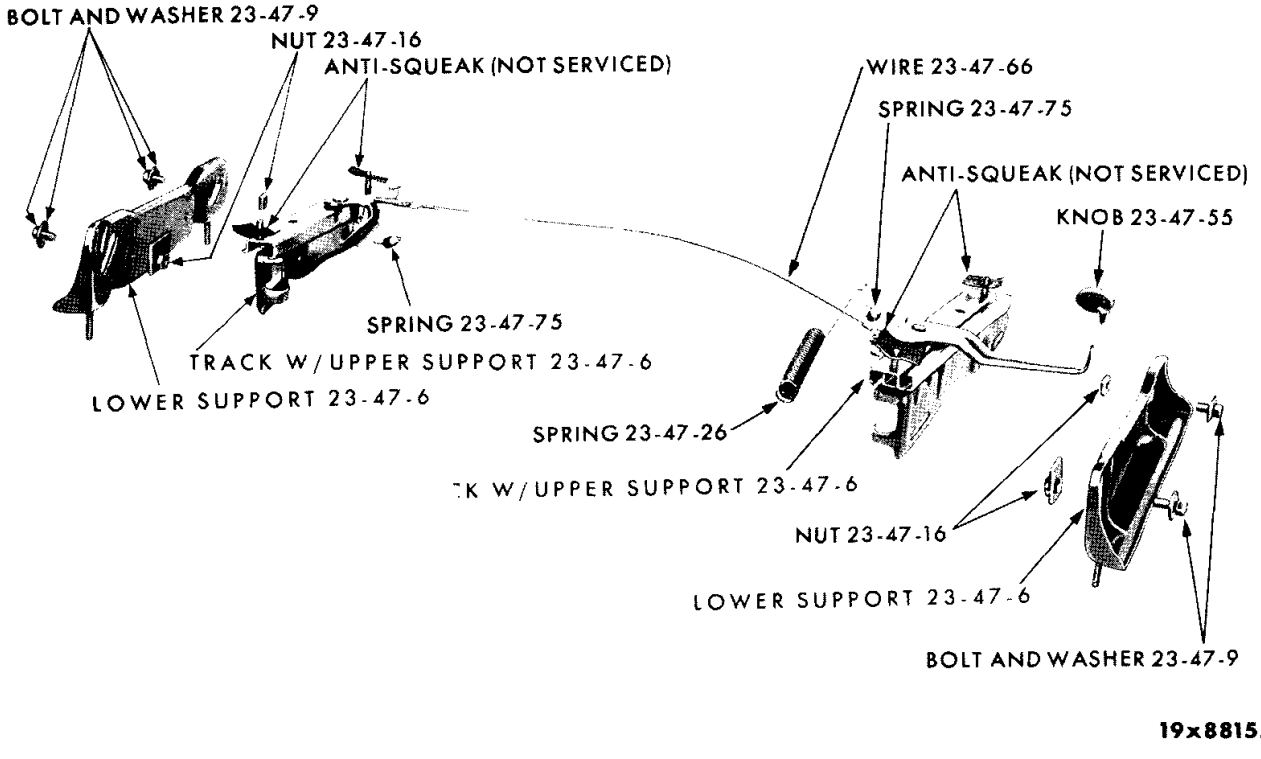

MANUAL SEAT ADJUSTER - EXCEPT VALIANT AND DART (WITHOUT BUCKET SEATS)

MyMopar.com

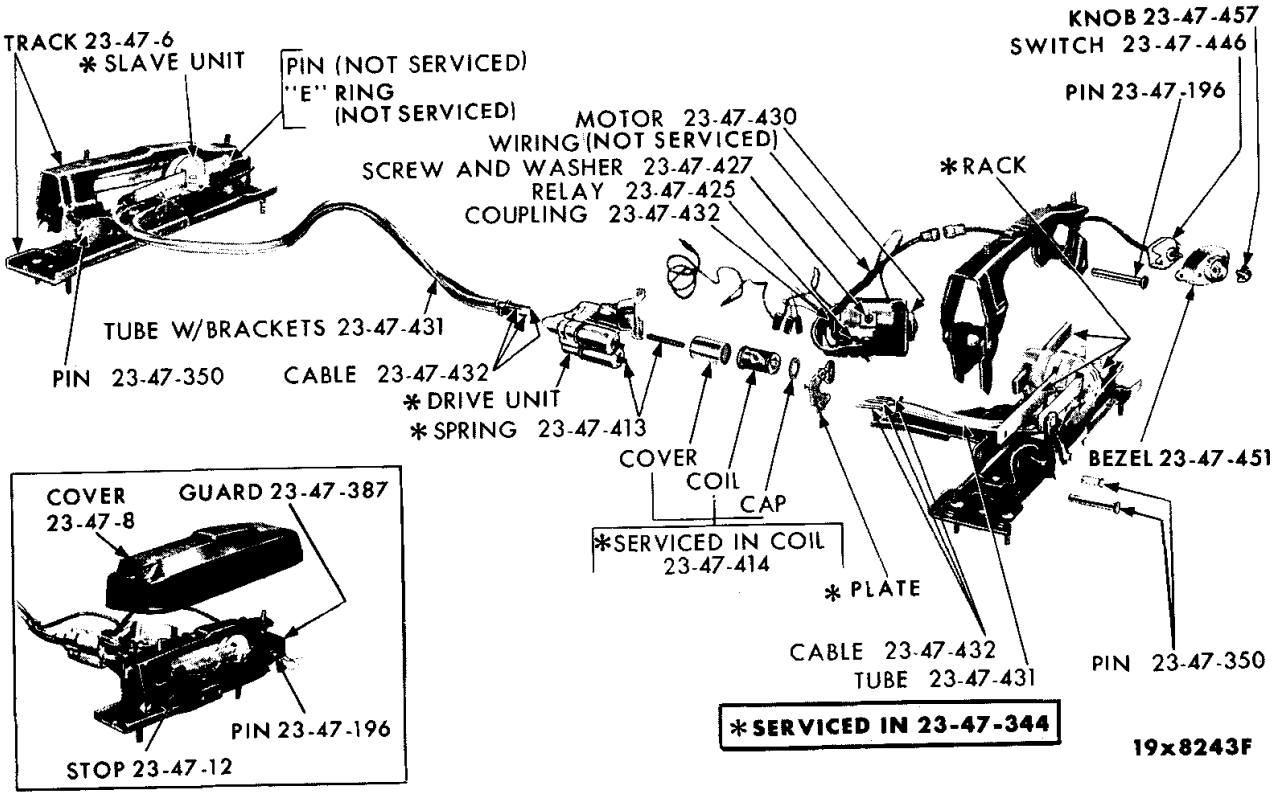

ELECTRIC SEAT ADJUSTER (WITHOUT BUCKET SEATS)

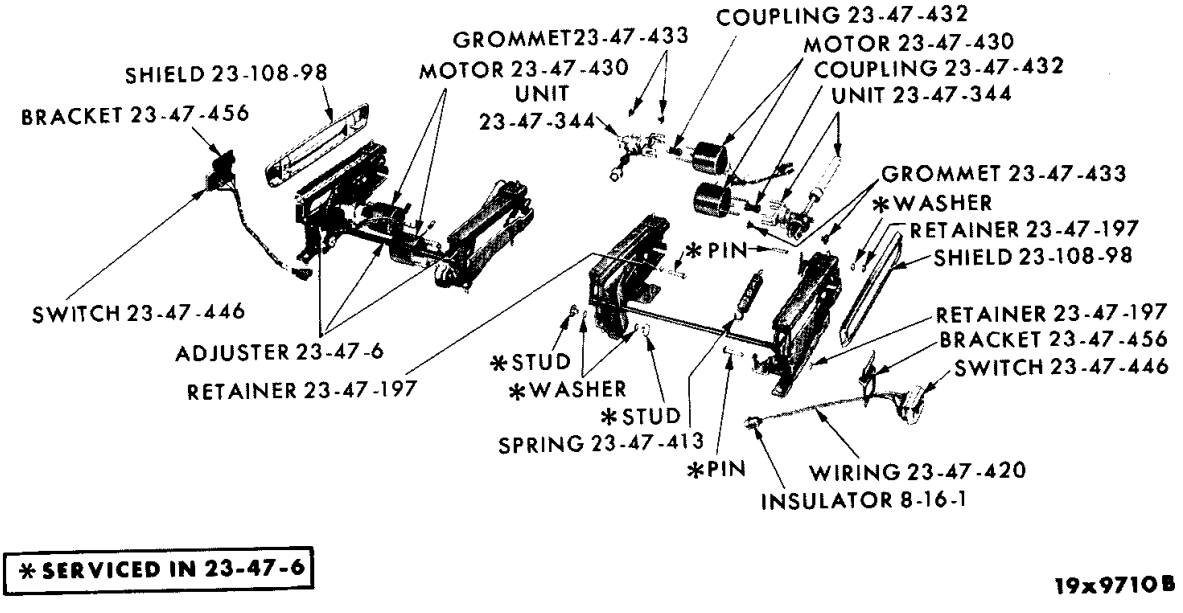

ELECTRIC BUCKET SEAT ADJUSTER - PLYMOUTH, DODGE, CHRYSLER AND IMPERIAL

MyMopar.com

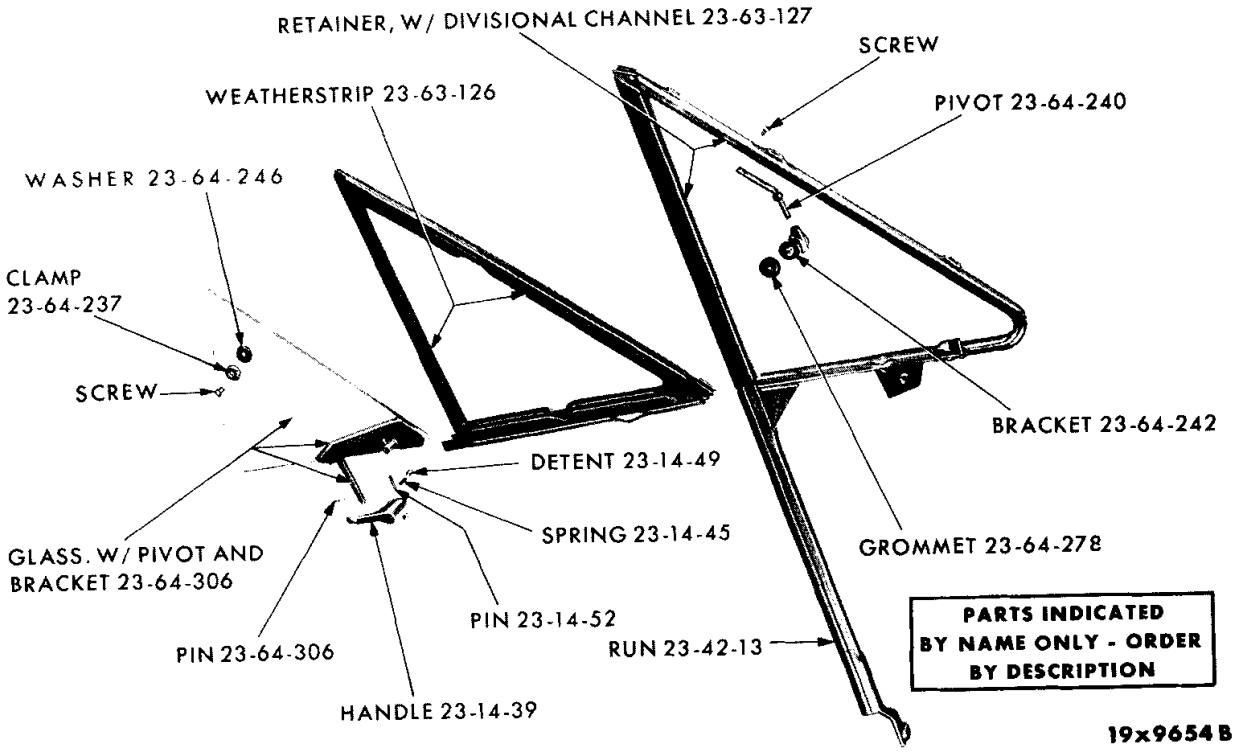

DOOR VENT WING AND GLASS - VALIANT AND DART
2 DOOR SEDAN, 4 DOOR SEDAN AND STATION WAGON

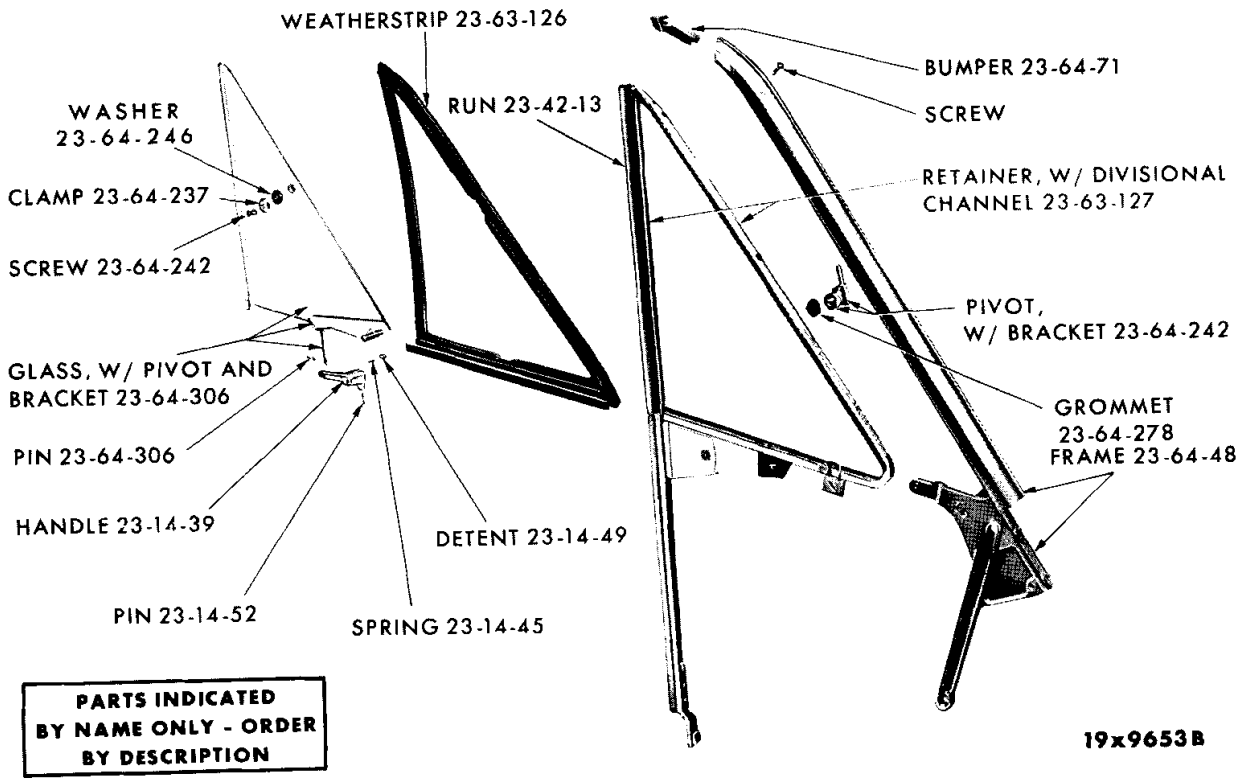

DOOR VENT WING AND GLASS - VALIANT AND DART
2 DOOR HARDTOP AND CONVERTIBLE COUPE

MyMopar.com

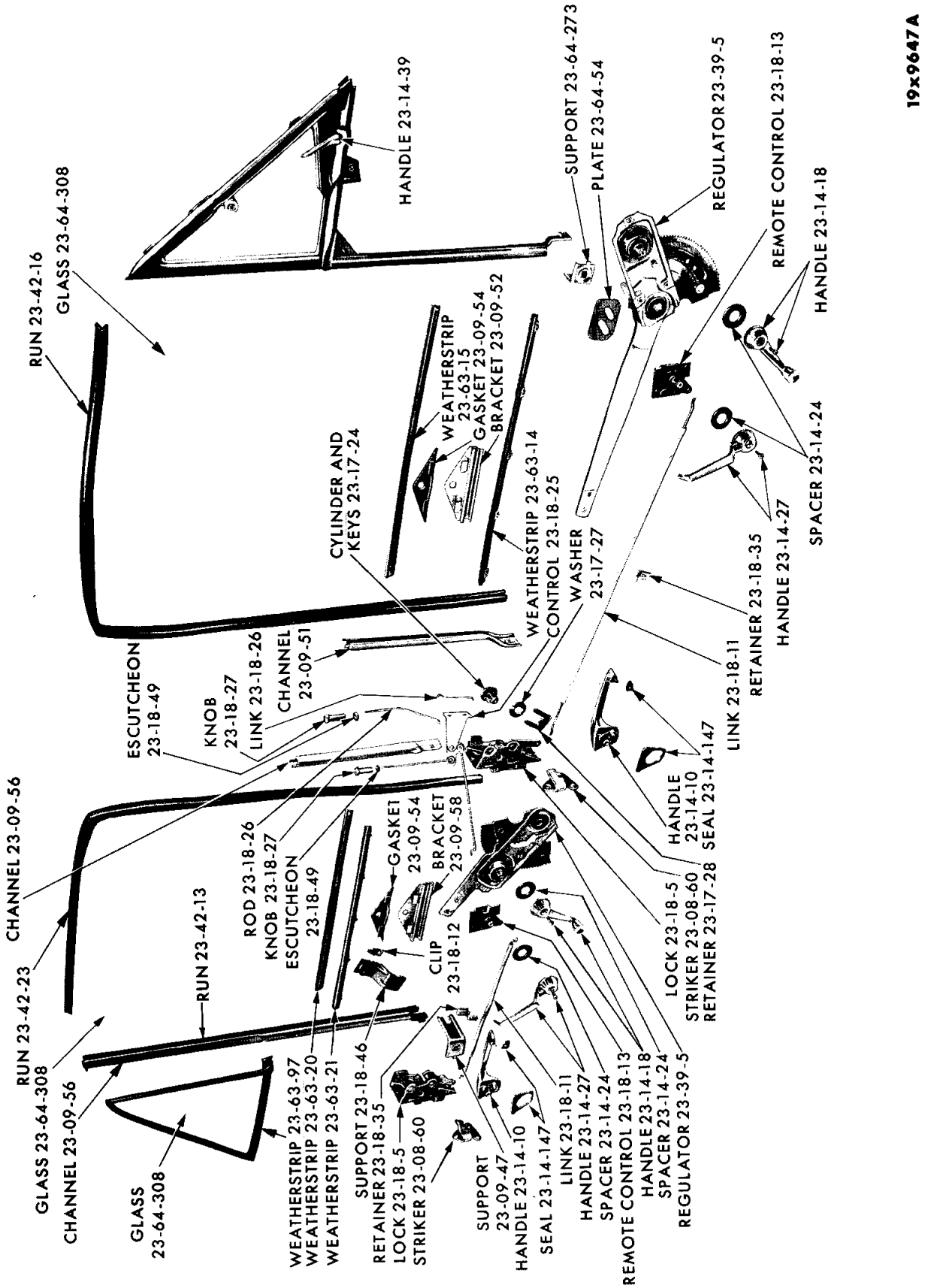

DOOR WINDOW REGULATORS AND RUNS - VALIANT AND DART 4 DOOR SEDAN AND STATION WAGON

MyMopar.com

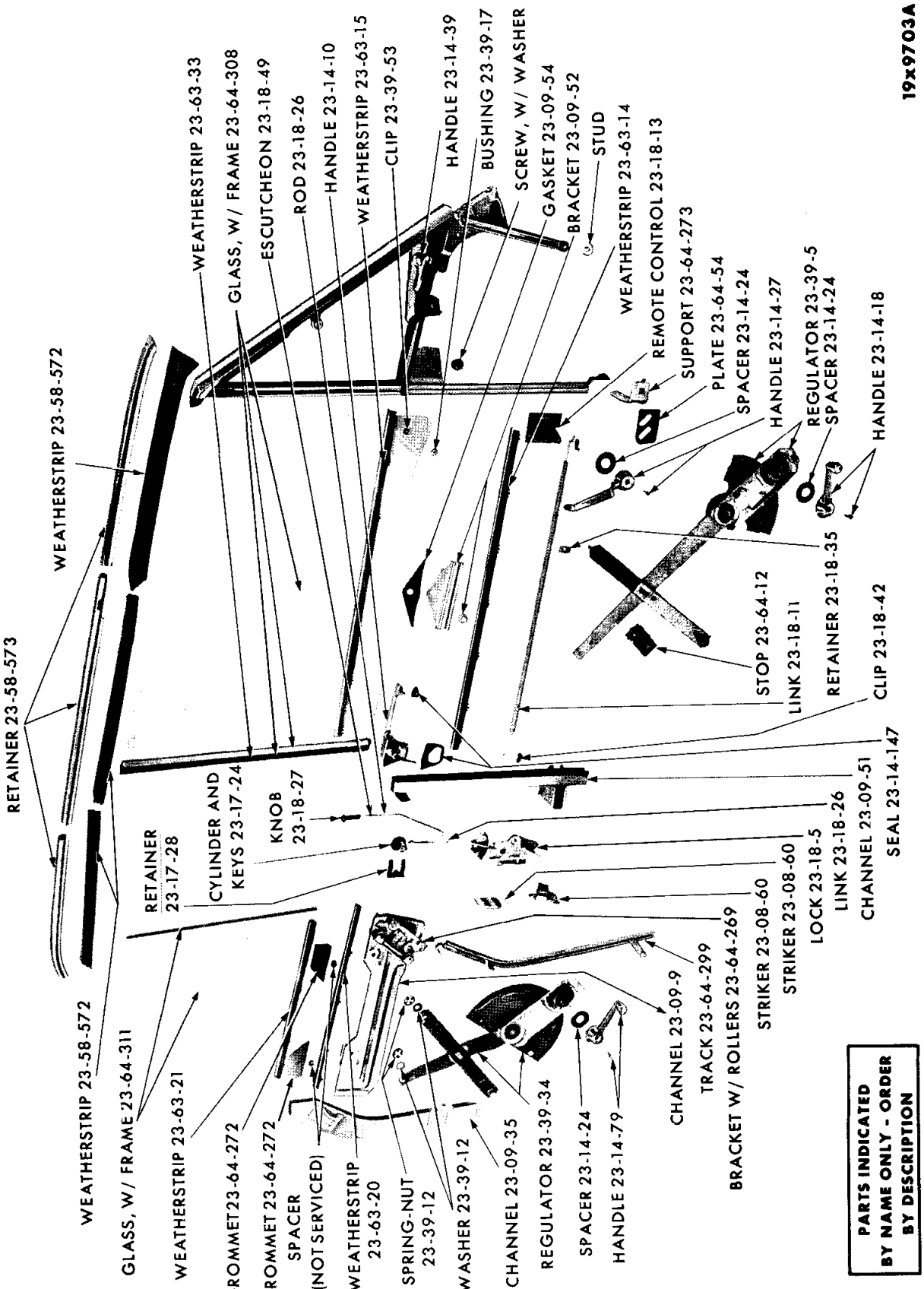

DOOR AND QUARTER WINDOW REGULATORS AND RUNS - VALIANT AND DART CONVERTIBLE COUPE

MyMopar.com

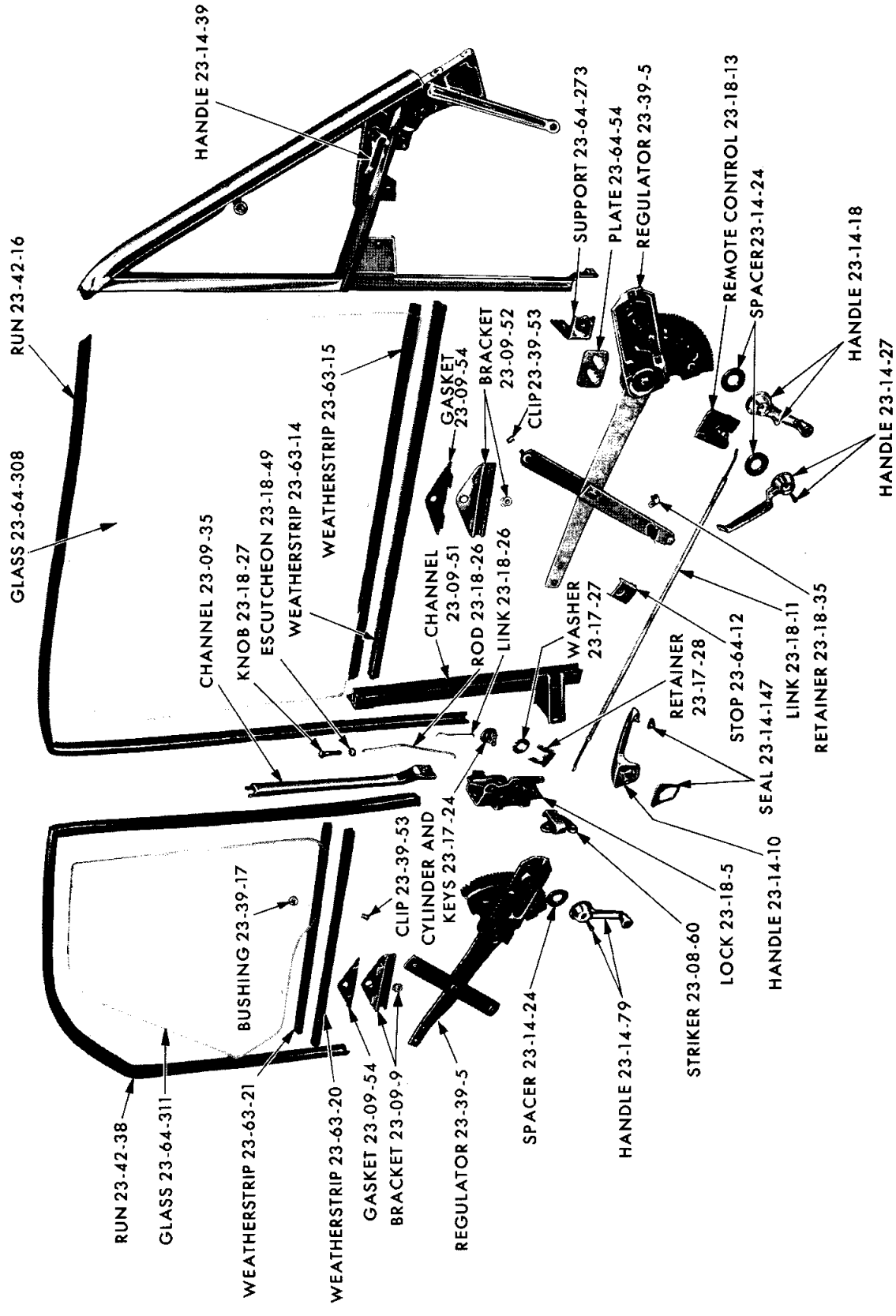

DOOR AND QUARTER WINDOW REGULATORS AND RUNS - VALIANT 2 DOOR SEDAN

MyMopar.com

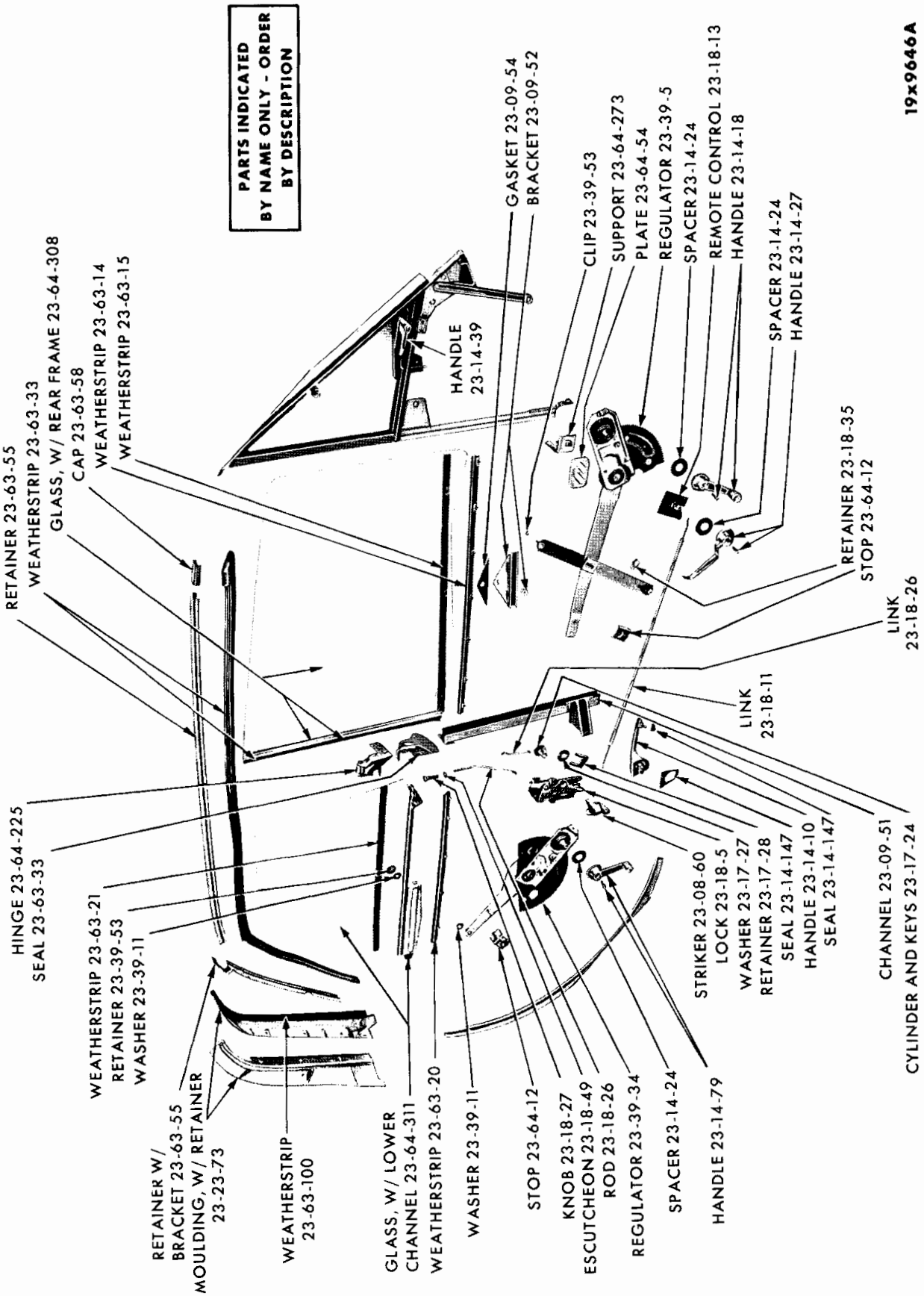

DOOR AND QUARTER WINDOW REGULATORS AND RUNS - VALIANT 2 DOOR HARDTOP

MyMopar.com

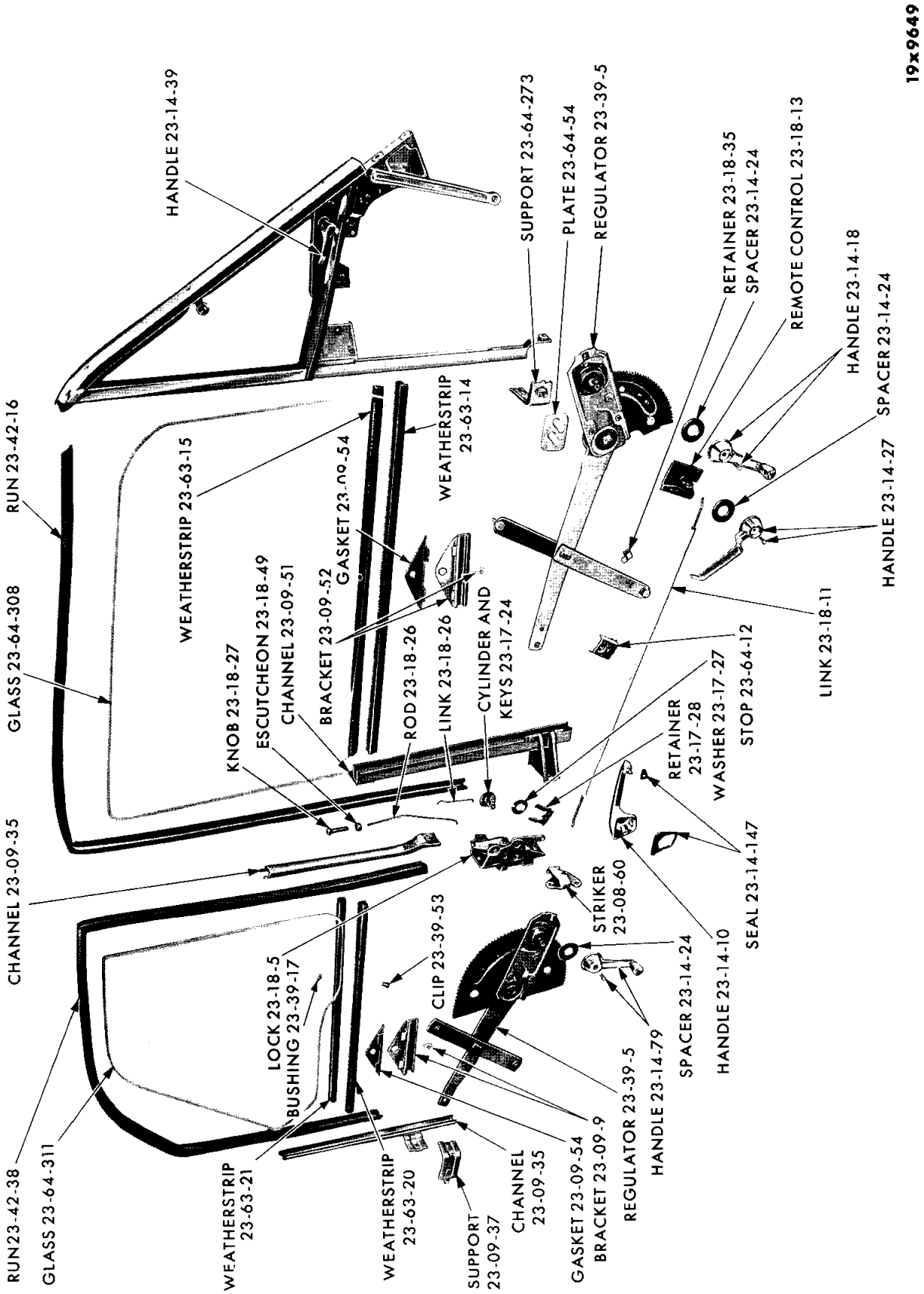

DOOR AND QUARTER WINDOW REGULATORS AND RUNS - DART 2 DOOR SEDAN

MyMopar.com

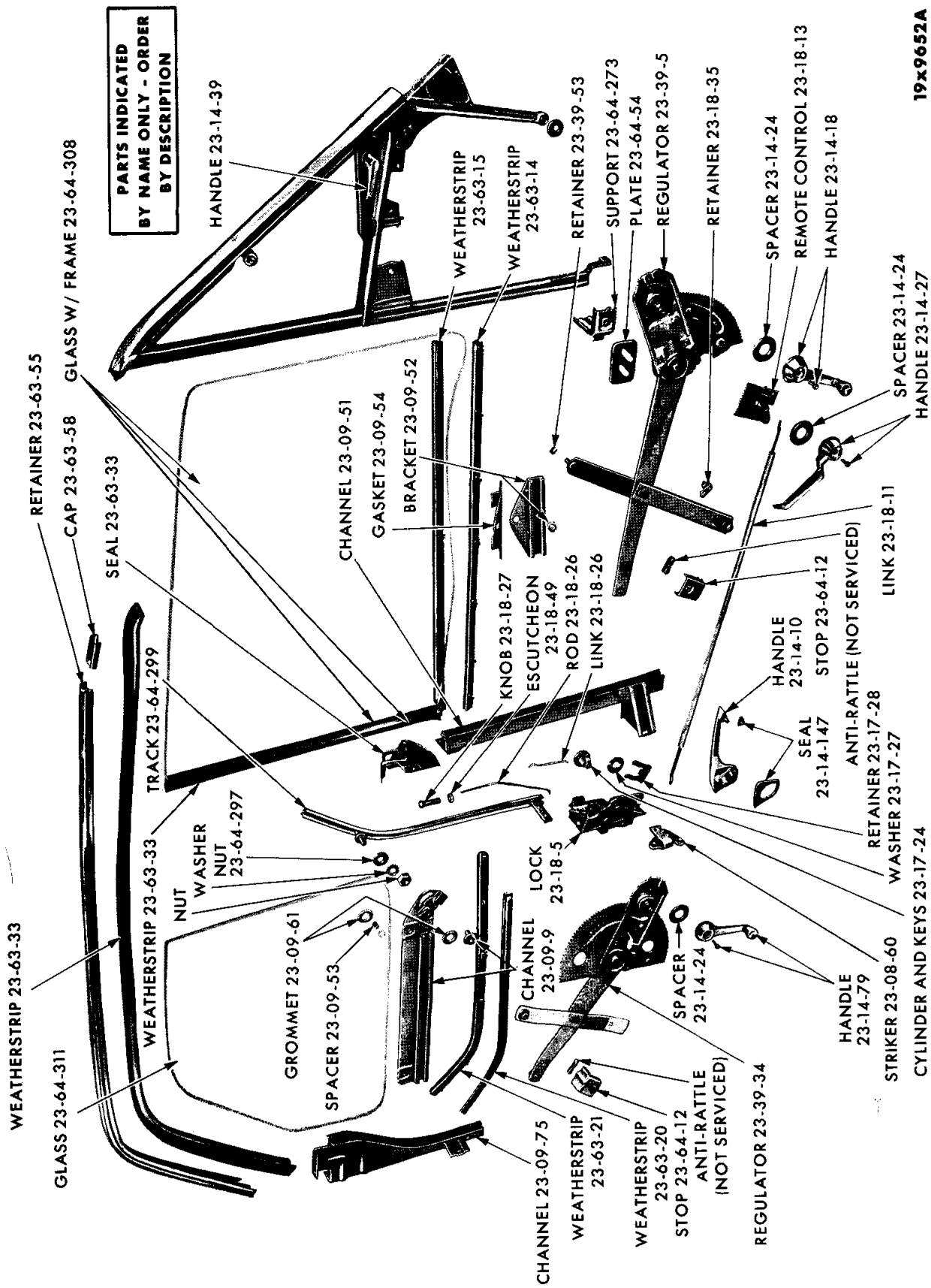

DOOR AND QUARTER WINDOW REGULATORS AND RUNS - DART 2 DOOR HARDTOP

MyMopar.com

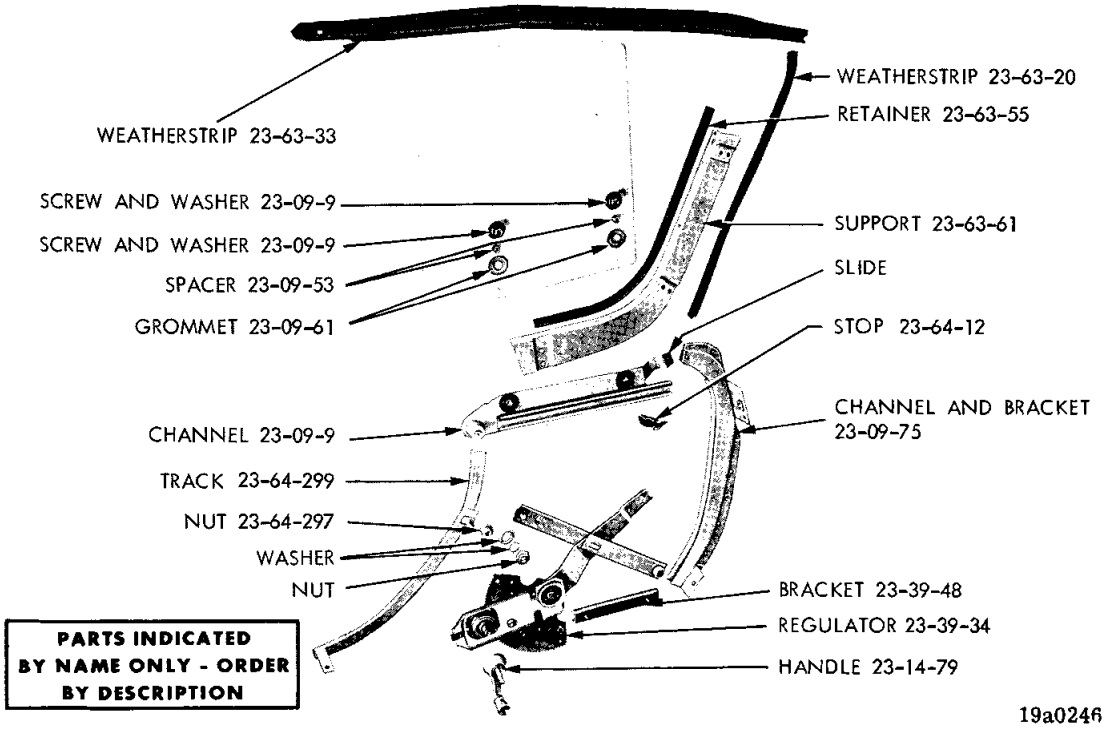

QUARTER WINDOW REGULATORS AND RUNS - VALIANT BARRACUDA

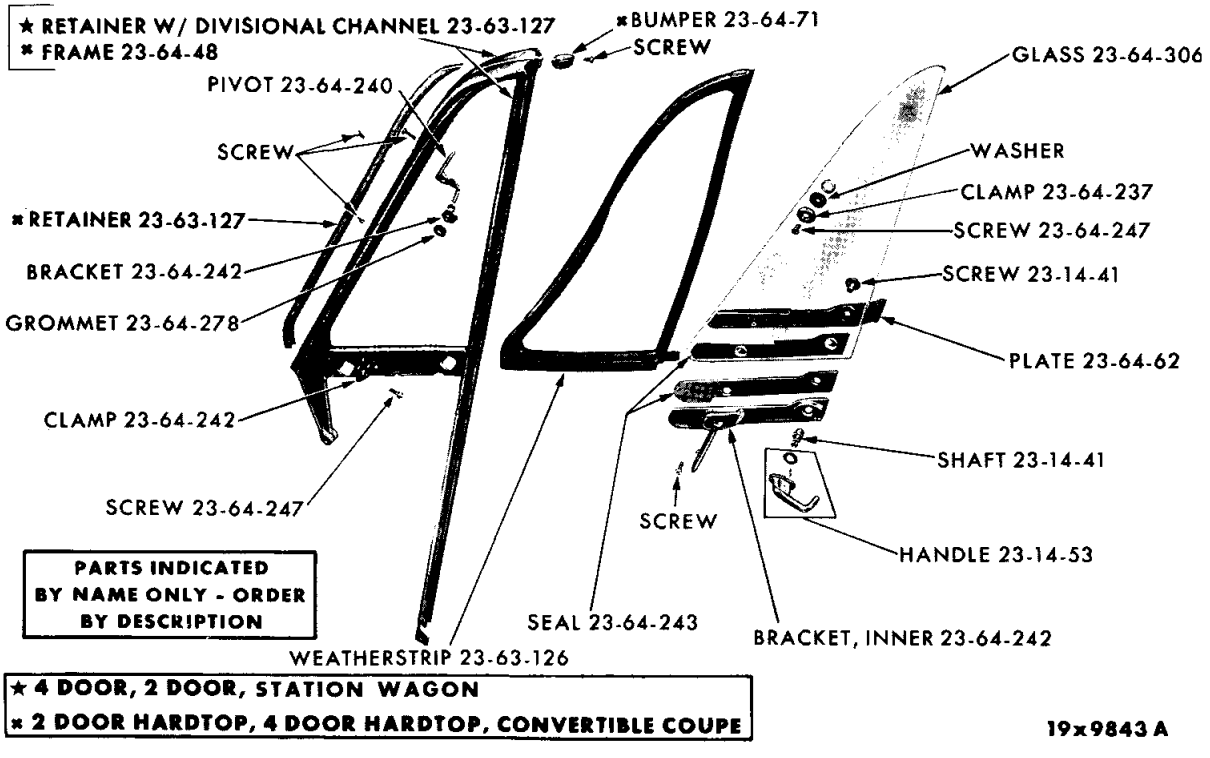

DOOR VENT WING AND GLASS - BELVEDERE AND CORONET

MyMopar.com

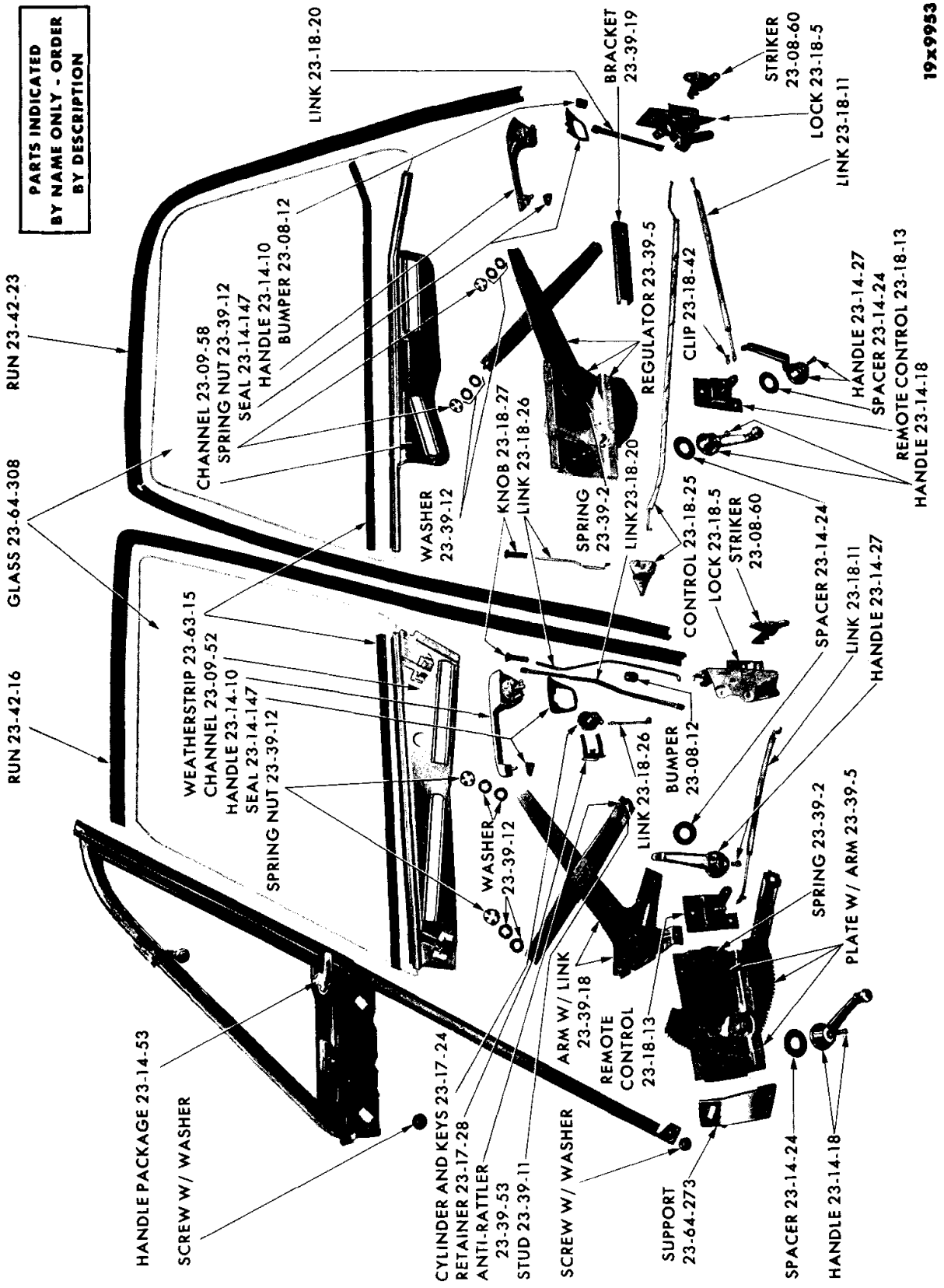

DOOR WINDOW REGULATORS AND RUNS - BELVEDERE AND CORONET 4 DOOR SEDAN AND STATION WAGON

MyMopar.com

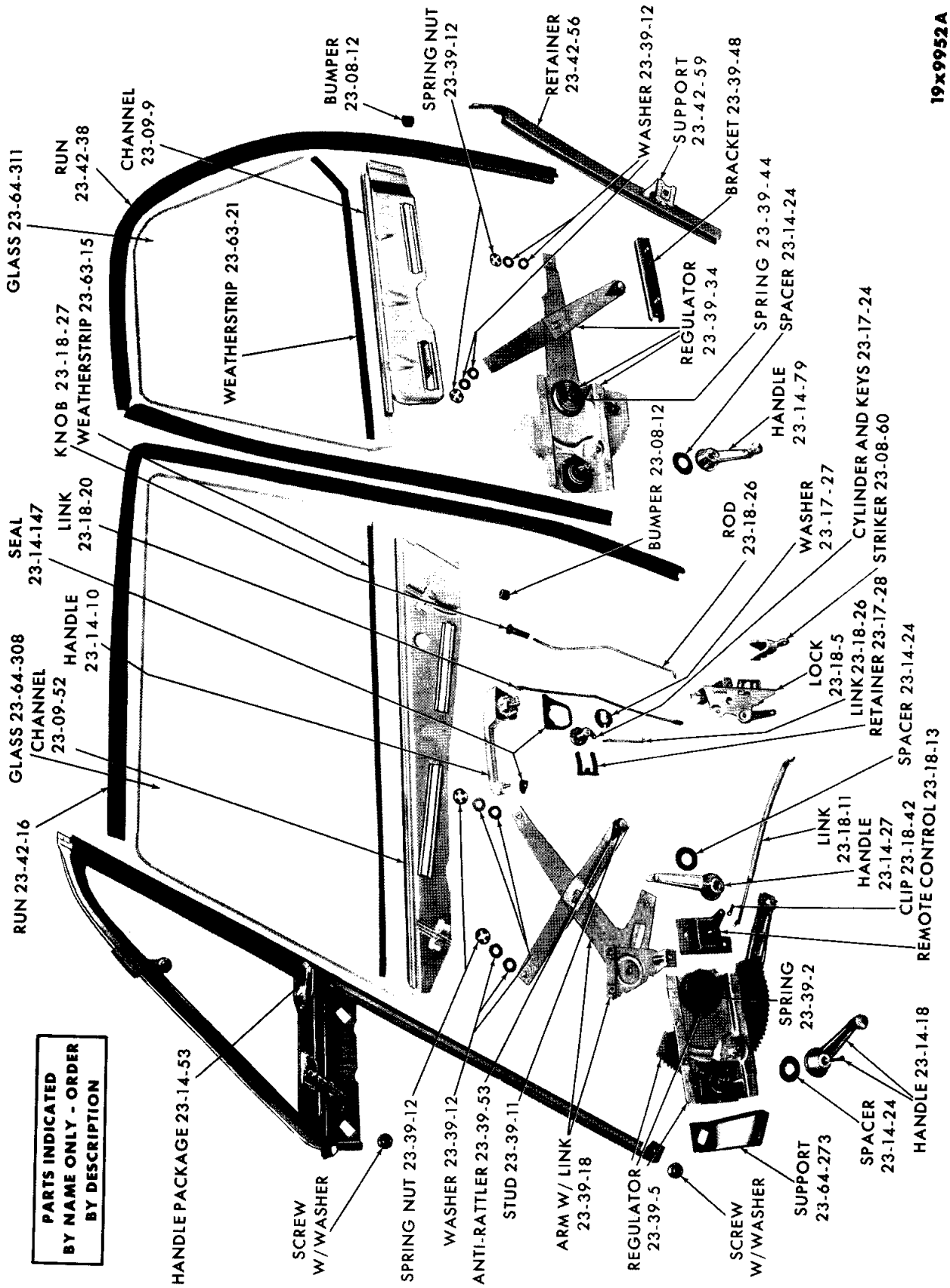

DOOR AND QUARTER WINDOW REGULATORS AND RUNS - BELVEDERE AND CORONET 2 DOOR SEDAN

MyMopar.com

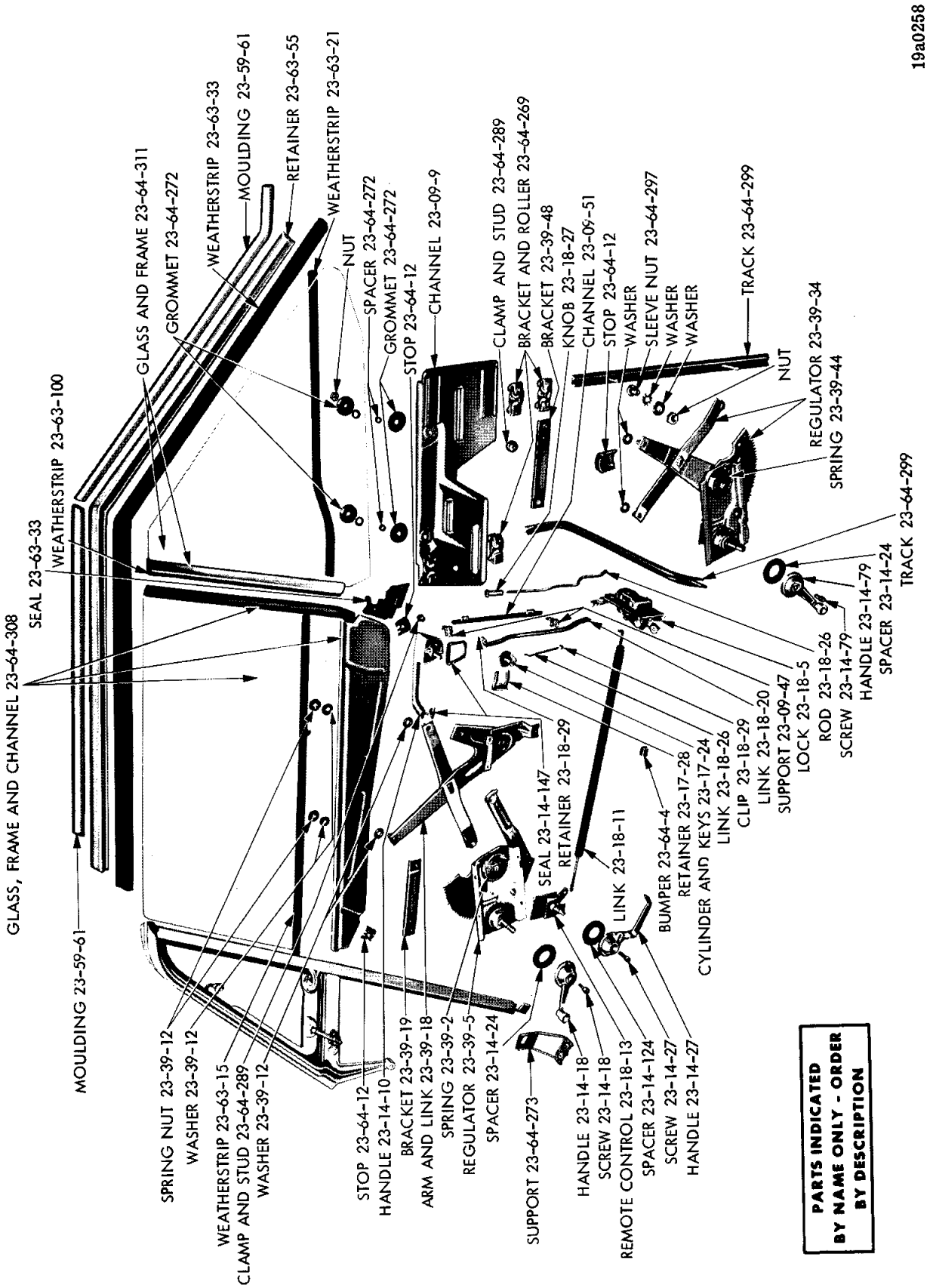

DOOR AND QUARTER WINDOW REGULATORS AND RUNS - BELVEDERE AND CORONET 2 DOOR HARDTOP

MyMopar.com

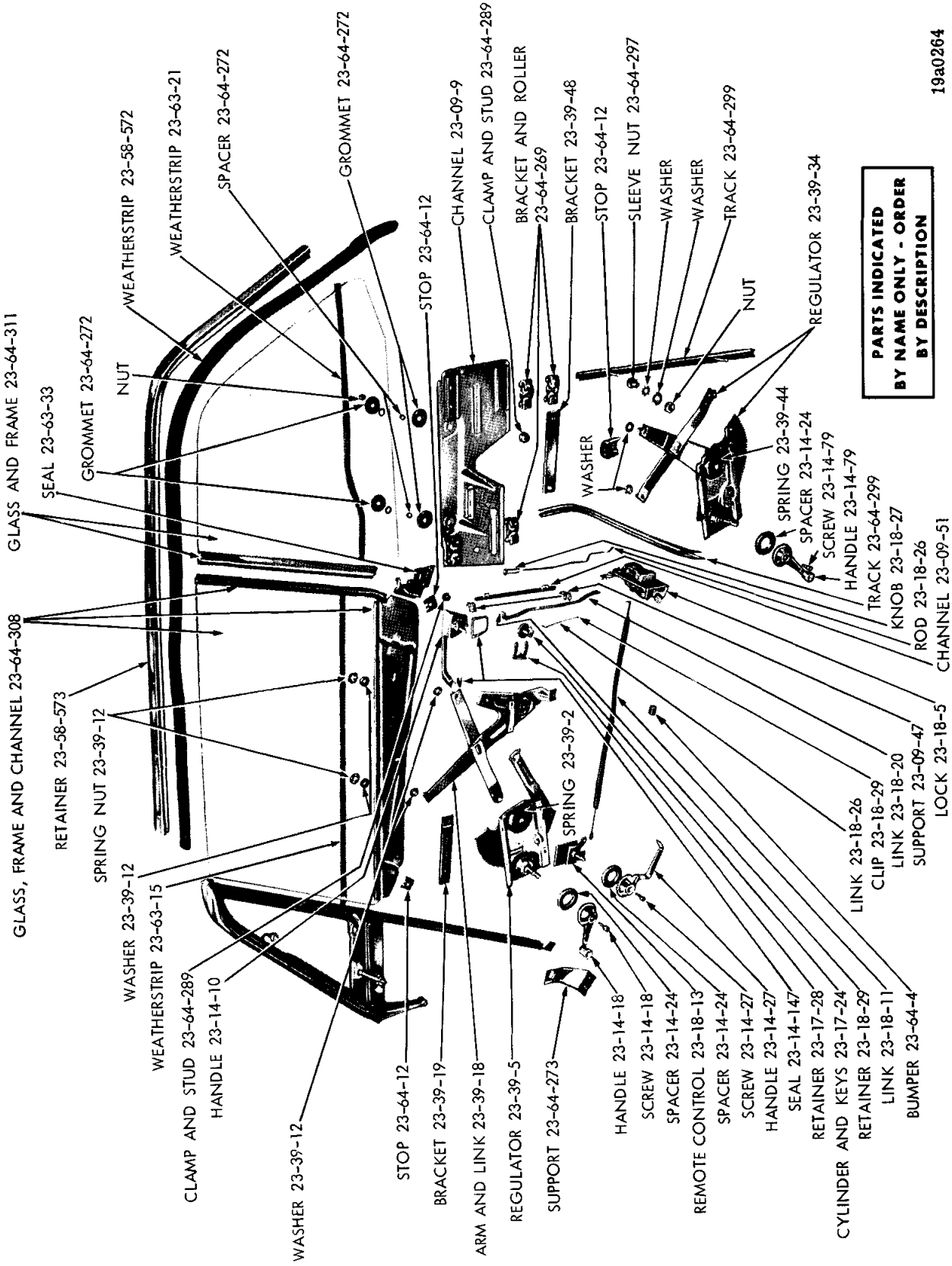

DOOR AND QUARTER WINDOW REGULATORS AND RUNS - BELVEDERE AND CORONET CONVERTIBLE COUPE

MyMopar.com

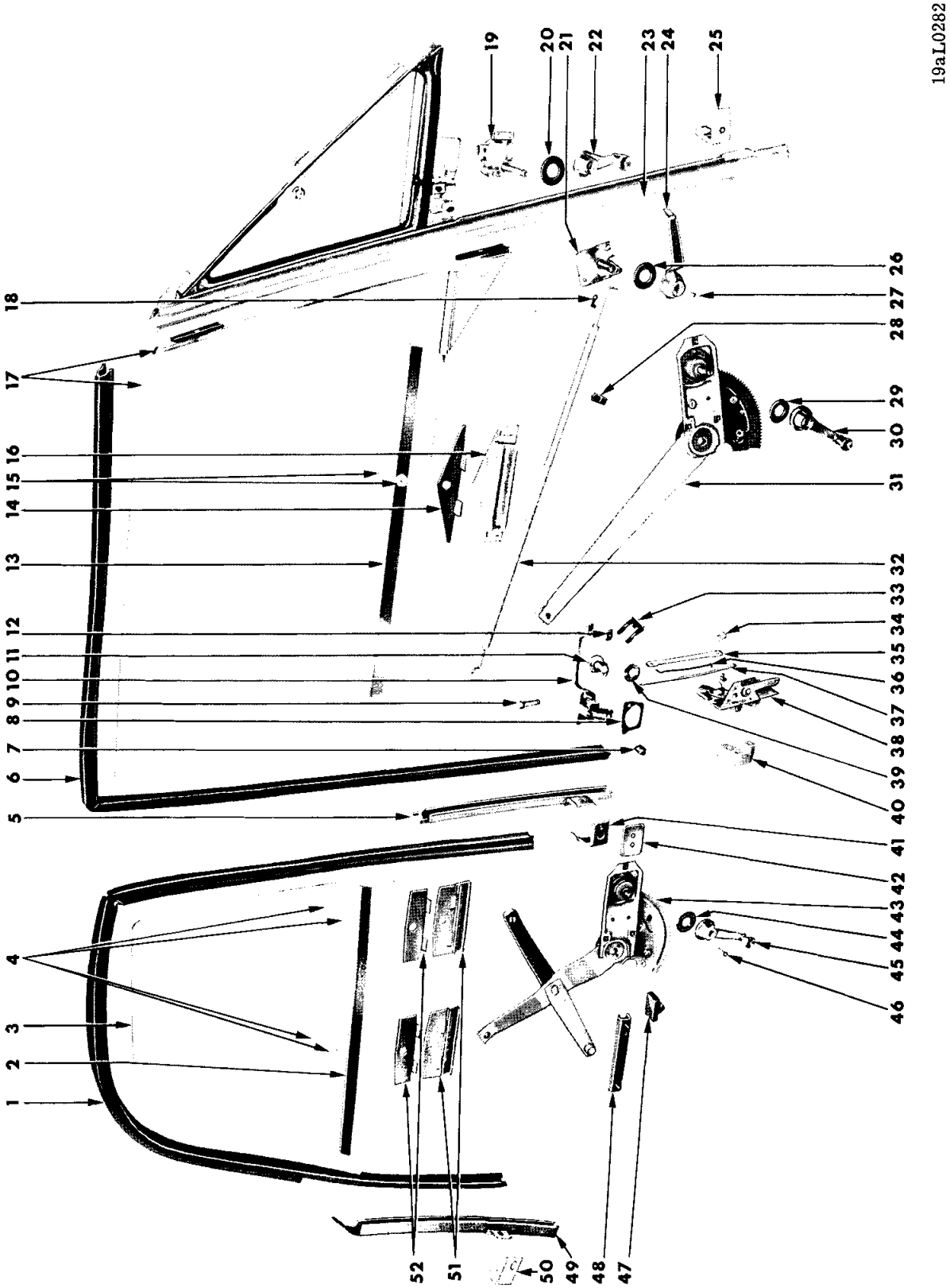

DOOR AND QUARTER WINDOW REGULATORS, RUNS AND LOCKS - PLYMOUTH 2 DOOR SEDAN

MyMopar.com

DOOR AND QUARTER WINDOW REGULATORS, RUNS AND LOCKS - PLYMOUTH 2 DOOR SEDAN

Ref. No.	Name	Part Type Code	Ref. No.	Name	Part Type Code
1	Run	23-42-38	27	Screw	23-14-27
2	Weatherstrip	23-63-21	28	Retainer	23-18-35
3	Glass	23-64-311	29	Spacer	23-14-24
4	Rivet	23-09-9	30	Handle	23-14-18
5	Channel	23-09-51	31	Regulator	23-39-5
6	Run	23-42-16	32	Link	23-18-11
7	Bumper	23-64-4	33	Retainer	23-17-28
8	Seal	23-14-147	34	Retainer	23-18-29
9	Knob	23-18-27	35	Link	23-18-20
10	Handle	23-14-10	36	Link	23-18-26
11	Cylinder and Keys	23-17-2	37	Link	23-18-26
12	Seal	23-14-147	38	Lock	23-18-5
13	Weatherstrip	23-63-15	39	Gasket	23-17-27
14	Gasket	23-09-54	40	Striker	23-08-60
15	Rivet	23-09-52	41	Support	23-09-47
16	Bracket w/Guide	23-09-52	42	Plate	Not Serviced
17	Glass w/Front Frame	23-64-308	43	Regulator	23-39-34
18	Clip	23-18-42	44	Spacer	23-14-24
19	Regulator	23-39-29	45	Handle	23-14-79
20	Spacer	23-14-24	46	Screw	23-14-79
21	Control	23-18-13	47	Bumper	23-64-4
22	Handle	23-14-53	48	Bracket	23-39-48
23	Weatherstrip	23-63-130	49	Retainer	23-42-56
24	Handle	23-14-27	50	Bracket	23-42-59
25	Support	23-64-273	51	Bracket	23-09-9
26	Spacer	23-14-24	52	Gasket	23-09-54

PARTS INDICATED BY NOUN ONLY - ORDER BY DESCRIPTION

MyMopar.com

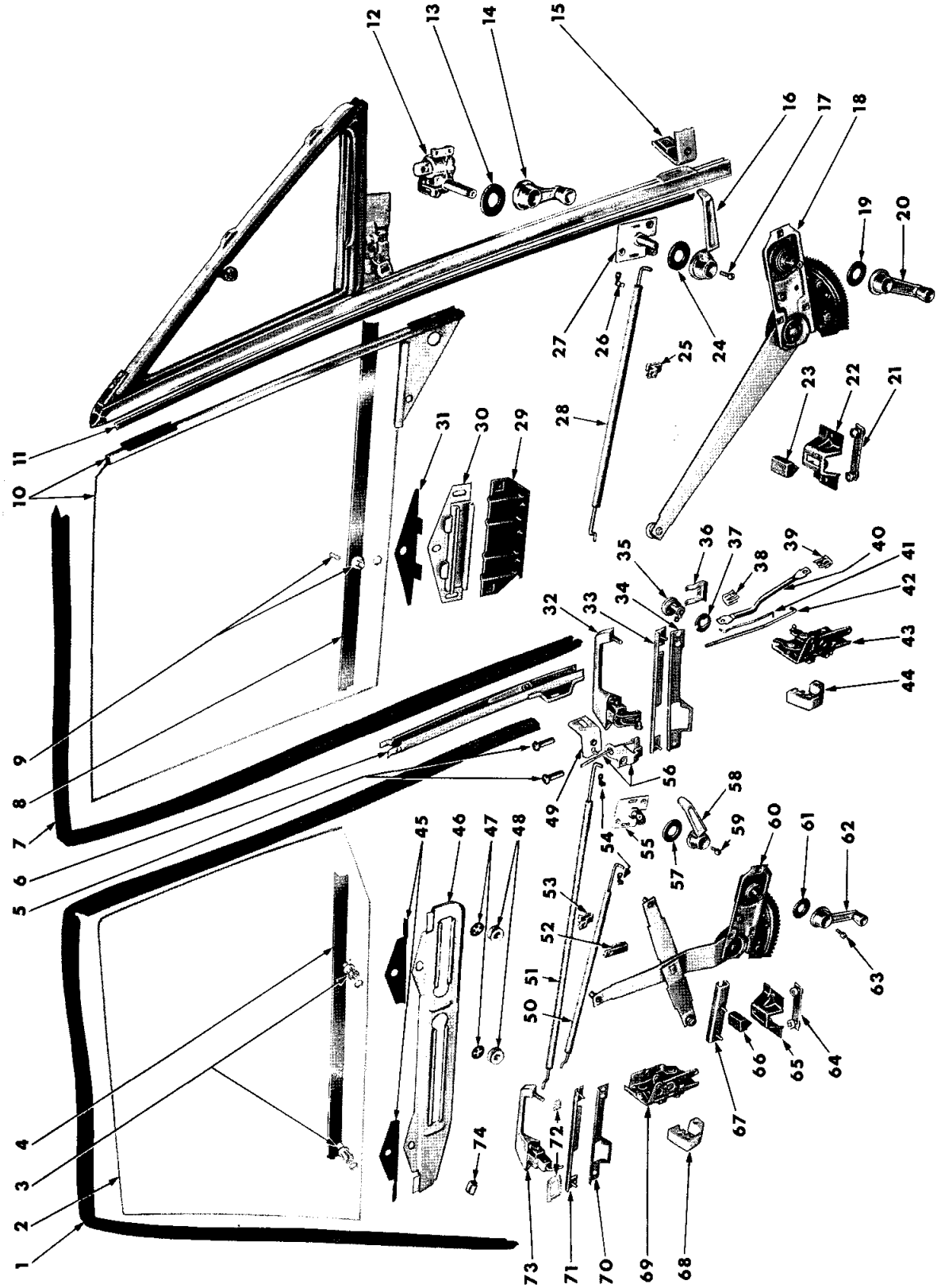

DOOR LOCK, WINDOW REGULATORS AND RUNS - PLYMOUTH, DODGE AND CHRYSLER 4 DOOR SEDAN AND STATION WAGON

MyMopar.com

DOOR LOCK, WINDOW REGULATORS AND RUNS - PLYMOUTH, DODGE AND CHRYSLER 4 DOOR SEDAN AND STATION WAGON

Ref. No.	Name	Part Type Code	Ref. No.	Name	Part Type Code
1	Run	23-42-23	38	Retainer	23-18-29
2	Glass	23-64-308	39	Retainer	23-18-29
3	Rivet	23-09-58	40	Link	23-18-20
4	Weatherstrip	23-63-15	41	Link	23-18-26
5	Knob	23-18-27	42	Link	23-18-26
6	Channel	23-09-51	43	Lock	23-18-5
7	Run	23-42-16	44	Striker	23-08-60
8	Weatherstrip	23-63-15	45	Gasket	23-09-54
9	Rivet	23-09-52	46	Channel	23-09-58
10	Glass w/Front Frame	23-64-308	47	Spring Nut	23-39-12
11	Weatherstrip	23-63-130	48	Roller	23-39-45
12	Regulator	23-39-29	49	Support	23-09-47
13	Spacer	23-14-24	50	Link	23-18-11
14	Handle	23-14-53	51	Link	23-18-26
15	Support	23-64-273	52	Clip	23-18-42
16	Handle	23-14-27	53	Retainer	23-18-35
17	Screw	23-14-27	54	Clip	23-18-42
18	Regulator	23-39-5	55	Control	23-18-13
19	Spacer	23-14-24	56	Control	23-18-25
20	Handle	23-14-18	57	Spacer	23-14-24
21	Retainer	23-64-28	58	Handle	23-14-27
22	Bracket	23-64-12	59	Screw	23-14-27
23	Bumper	23-64-4	60	Regulator	23-39-5
24	Spacer	23-14-24	61	Spacer	23-14-24
25	Retainer	23-18-35	62	Handle	23-14-18
26	Clip	23-18-42	63	Screw	23-14-18
27	Control	23-18-13	64	Retainer	23-64-28
28	Link	23-18-11	65	Bracket	23-64-12
29	Stop	23-64-12	66	Bumper	23-64-4
30	Bracket w/Guide	23-09-52	67	Bracket	23-39-19
31	Gasket	23-09-54	68	Striker	23-08-60
32	Handle	23-14-10	69	Lock	23-18-5
33	Base	23-14-68	70	Gasket	23-14-69
34	Gasket	23-14-69	71	Base	23-14-68
35	Cylinder and Keys	23-17-24	72	Seal	23-14-147
36	Retainer	23-17-28	73	Handle	23-14-10
37	Gasket	23-17-27	74	Bumper	23-64-4

PARTS INDICATED BY NAME ONLY - ORDER BY DESCRIPTION

MyMopar.com

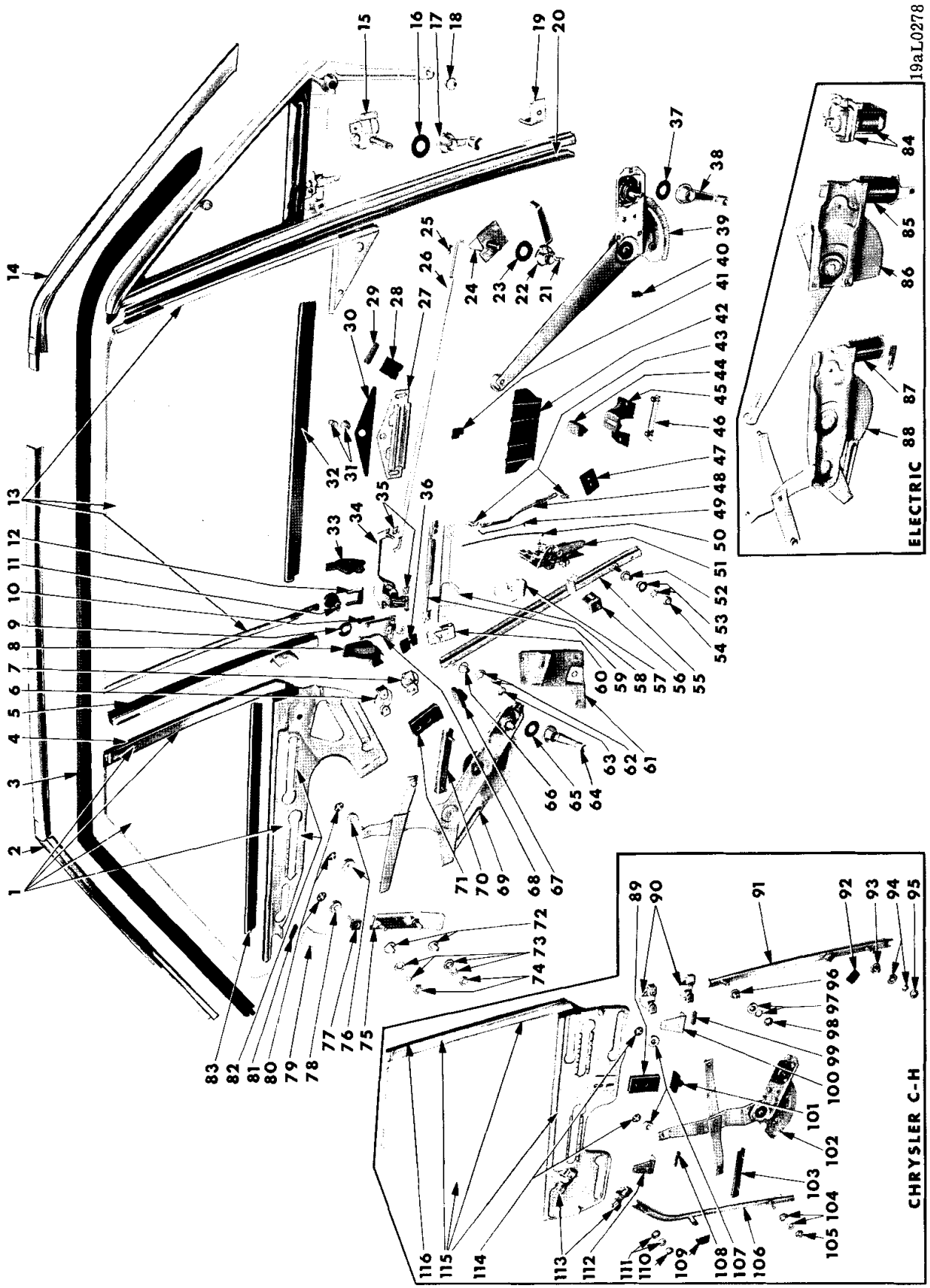

DOOR AND QUARTER WINDOW REGULATORS AND RUNS - PLYMOUTH, DODGE AND CHRYSLER 2 DOOR HARDTOP

MyMopar.com

DOOR AND QUARTER WINDOW REGULATORS AND RUNS - PLYMOUTH, DODGE AND CHRYSLER 2 DOOR HARDTOP

Ref. No.	Name	Part Type Code
1	Glass w/Frame and Lower Channel	23-64-311
2	Retainer	23-63-55
3	Weatherstrip	23-63-33
4	Weatherstrip	23-63-104
	Retainer	23-63-105
5	Channel	23-09-51
6	Bracket w/Roller, Upper	23-64-269
7	Bracket w/Roller, Lower	23-64-269
8	Seal	23-63-33
9	Gasket	23-17-27
10	Knob	23-18-27
11	Cylinder and Keys	23-17-24
12	Retainer	23-17-28
13	Glass w/Front and Rear Frame	23-64-308
14	Retainer	23-63-55
15	Regulator	23-39-29
16	Spacer	23-14-24
17	Handle	23-14-53
18	Stud	23-64-275
19	Support	23-64-273
20	Weatherstrip	23-63-130
21	Screw	23-14-27
22	Handle	23-14-27
23	Spacer	23-14-24
24	Control	23-18-13
25	Clip	23-18-42
26	Link	23-18-11
27	Bracket	23-09-52
28	Stop	23-64-12
29	Anti-Rattler	23-64-17
30	Gasket	23-09-54
31	Rivet	23-09-52
32	Weatherstrip	23-63-15
33	Seal	23-63-33
34	Handle	23-14-10
35	Seal	23-14-147
36	Bumper	23-64-4
37	Spacer	23-14-24
38	Handle	23-14-18
39	Regulator	23-39-5
40	Bumper	23-64-4
41	Retainer	23-18-35
42	Stop	23-64-12
43	Retainer	23-18-29
44	Bumper	23-64-4
45	Bracket	23-64-12
46	Retainer	23-64-28
47	Plate	Not Serviced
48	Link	23-18-20
49	Link	23-18-26
50	Link	23-18-26
51	Lock	23-18-5
52	Sleeve Nut	23-64-297
53	Washer	
54	Nut	
55	Track	23-64-299
56	Support	23-64-300
57	Striker	23-08-60
58	Gasket	23-14-69
59	Base	23-14-68
60	Stop	23-64-12
61	Brace	23-64-281
62	Washer	
63	Nut	
64	Handle	23-14-79
65	Spacer	23-14-24
66	Sleeve Nut	23-64-297
67	Bumper	23-64-4
68	Control	23-18-25
69	Regulator	23-39-14
70	Bracket	23-39-48
71	Bracket	23-64-12
72	Sleeve Nut	23-64-297
73	Washer	
74	Nut	
75	Track	23-64-299
76	Roller	23-39-45
77	Slide	23-64-282
78	Roller	23-64-291
79	Stop	23-64-12
80	Spring Nut	23-39-12
81	Anti-Rattler	23-64-17
82	Cap	23-09-27
83	Weatherstrip	23-63-21
84	Motor w/Mechanism	23-64-75
85	Motor w/Mechanism	23-41-106
86	Regulator	23-41-4
87	Motor w/Mechanism	23-41-106
88	Regulator	23-41-4
89	Bracket	23-64-12
90	Bracket w/Roller	23-64-269
91	Track	23-64-299
92	Support	23-64-300
93	Sleeve Nut	23-64-297
94	Washer	
95	Nut	
96	Sleeve Nut	23-64-297
97	Washer	
98	Nut	
99	Anti-Rattler	23-64-17
100	Stop	23-64-12
101	Bumper	23-64-4
102	Regulator	23-39-14
103	Bracket	23-39-48
104	Washer	
105	Nut	
106	Track	23-64-299
107	Roller	23-39-45
108	Anti-Rattler	23-64-17
109	Stop	23-64-12
110	Nut	
111	Washer	
112	Stop	23-64-12
113	Bracket w/Roller	23-64-269
114	Spring Nut	23-39-12
115	Glass w/Frame and Lower Channel	23-64-311
116	Weatherstrip	23-63-104
	Retainer	23-63-105

PARTS INDICATED BY NAME ONLY - ORDER BY DESCRIPTION

MyMopar.com

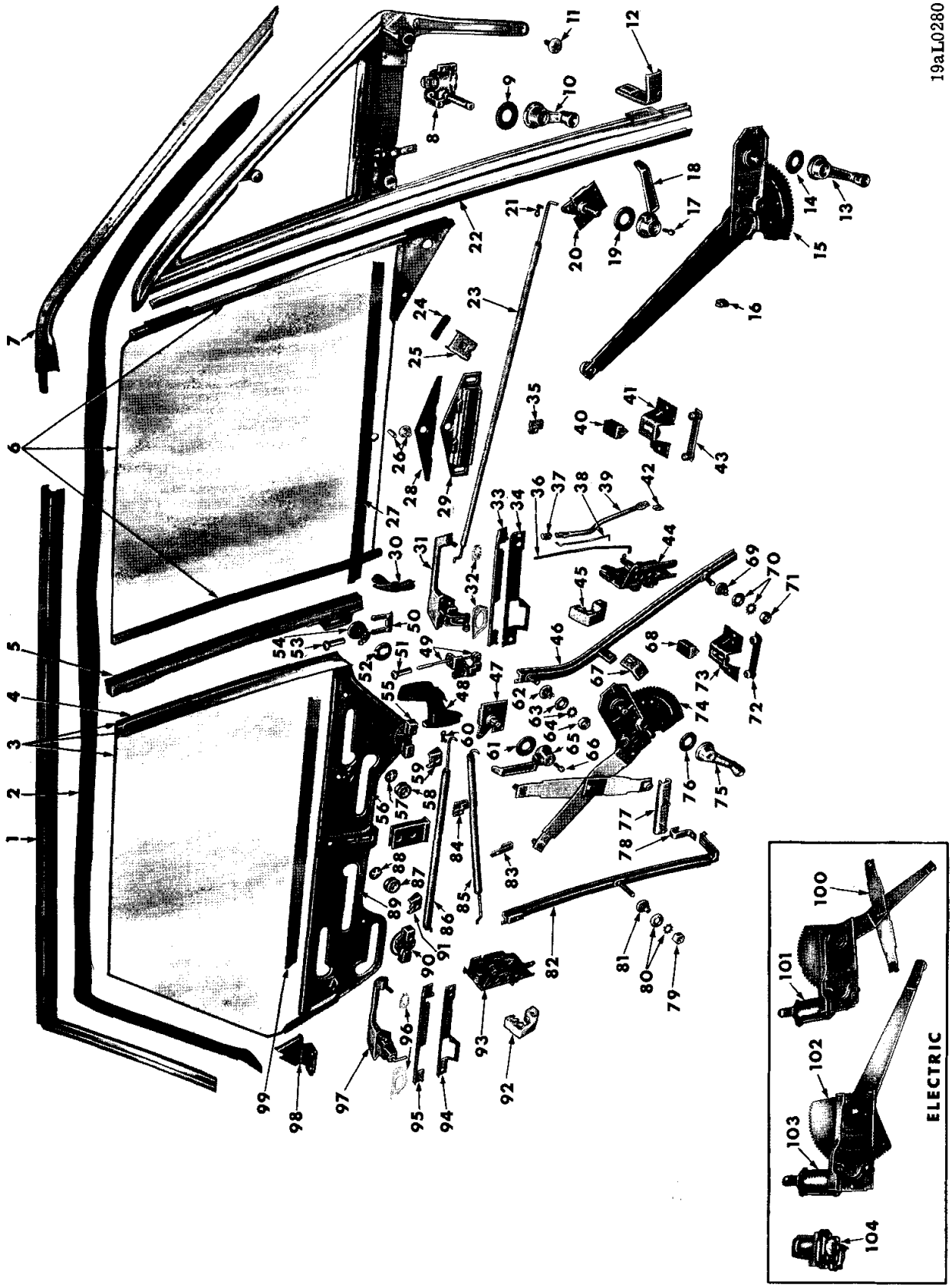

DOOR LOCK, WINDOW REGULATORS AND RUNS - PLYMOUTH, DODGE AND CHRYSLER 4 DOOR HARDTOP

MyMopar.com

DOOR LOCK, WINDOW REGULATORS AND RUNS - PLYMOUTH, DODGE AND CHRYSLER 4 DOOR HARDTOP

Ref. No.	Name	Part Type Code
1	Retainer	23-63-55
2	Weatherstrip	23-63-33
3	Glass w/Frame and Lower Channel	23-64-308
4	Weatherstrip	23-63-94
	Retainer	23-63-105
5	Channel	23-09-51
6	Glass w/Front and Rear Frame	23-64-308
7	Retainer	23-63-55
8	Regulator	23-39-29
9	Spacer	23-14-24
10	Handle	23-14-53
11	Stud	23-64-275
12	Support	23-64-273
13	Handle	23-14-18
14	Spacer	23-14-24
15	Regulator	23-39-5
16	Bumper	23-64-12
17	Screw	23-14-27
18	Handle	23-14-27
19	Spacer	23-14-24
20	Control	23-18-13
21	Clip	23-18-42
22	Weatherstrip	23-63-130
23	Link	23-18-11
24	Anti-Rattler	23-64-17
25	Stop	23-64-12
26	Rivet	23-09-52
27	Weatherstrip	23-63-15
28	Gasket	23-09-54
29	Bracket	23-09-52
30	Seal	23-63-33
31	Handle	23-14-10
32	Seal	23-14-147
33	Base	23-14-68
34	Seal	23-14-69
35	Retainer	23-18-35
36	Link	23-18-26
37	Retainer	23-18-29
38	Link	23-18-26
39	Link	23-18-20
40	Bumper	23-64-4
41	Bracket	23-64-12
42	Retainer	23-18-29
43	Retainer	23-64-28
44	Lock	23-18-5
45	Striker	23-08-60
46	Track	23-64-254
47	Control	23-18-13
48	Seal	23-63-33
49	Control	23-18-25
50	Retainer	23-17-28
51	Knob	23-18-27
52	Gasket	23-17-27
53	Knob	23-18-27
54	Cylinder and Keys	23-17-24
55	Bracket w/Roller	23-64-269
56	Cap	23-09-27
57	Spring Nut	23-39-12
58	Roller	23-39-45
	Roller	23-41-250
59	Stop	23-64-12
60	Clip	23-18-42
61	Spacer	23-14-24
62	Sleeve Nut	23-64-297
63	Washer	
64	Nut	
65	Handle	23-14-27
66	Screw	23-14-27
67	Support	23-64-269
68	Bumper	23-64-4
69	Sleeve Nut	23-64-297
70	Washer	
71	Nut	
72	Retainer	23-64-28
73	Bracket	23-64-12
74	Regulator	23-39-5
75	Handle	23-14-18
76	Spacer	23-14-24
77	Bracket	23-39-19
78	Clip	Not Serviced
79	Nut	
80	Washer	
81	Sleeve Nut	23-64-297
82	Track	23-64-254
83	Clip	23-18-42
84	Retainer	23-18-35
85	Link	23-18-11
86	Link	23-18-26
87	Roller	23-39-45
	Roller	23-41-250
88	Spring Nut	23-39-12
89	Cap	23-09-27
90	Bracket w/Roller	23-64-269
91	Stop	23-64-12
92	Striker	23-08-60
93	Lock	23-18-5
94	Seal	23-14-69
95	Base	23-14-68
96	Seal	23-14-147
97	Handle	23-14-10
98	Weatherstrip and Ornament	23-63-33
99	Weatherstrip	23-63-15
100	Regulator	23-41-4
101	Motor w/Mechanism	23-41-106
102	Regulator	23-41-4
103	Motor w/Mechanism	23-41-106
104	Motor w/Mechanism	23-64-75

PARTS INDICATED BY NAME ONLY - ORDER BY DESCRIPTION

MyMopar.com

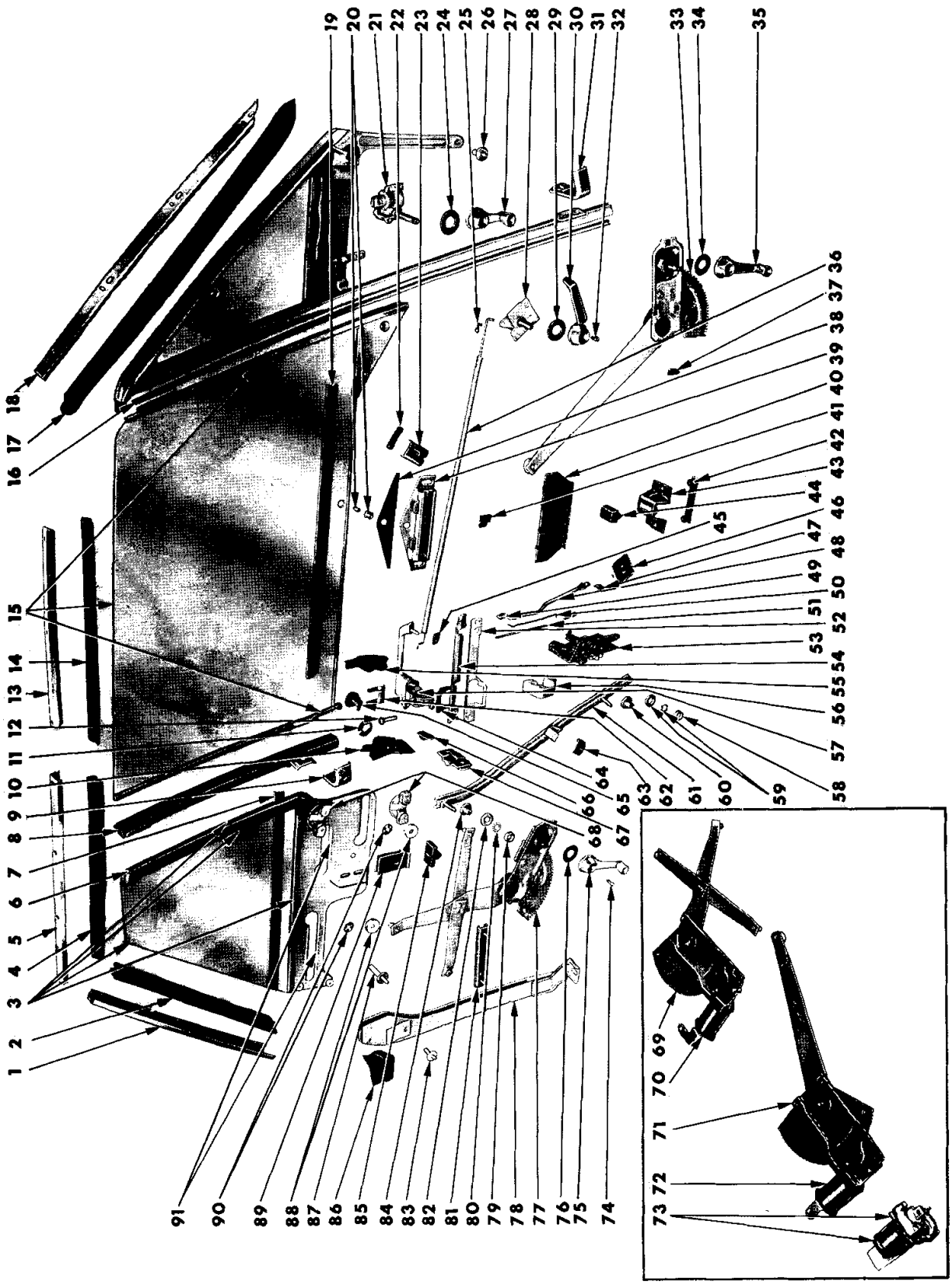

DOORS AND QUARTER WINDOW REGULATORS AND RUNS - PLYMOUTH, DODGE AND CHRYSLER CONVERTIBLE COUPE

MyMopar.com

DOOR AND QUARTER WINDOW REGULATORS AND RUNS - PLYMOUTH, DODGE AND CHRYSLER CONVERTIBLE COUPE

Ref. No.	Name	Part Type Code
1	Retainer	23-58-573
2	Weatherstrip	23-58-572
3	Glass w/Frame and Lower Channel	23-64-311
4	Weatherstrip	23-58-572
5	Retainer	23-58-573
6	Weatherstrip	23-63-104
	Retainer	23-63-105
7	Weatherstrip	23-63-21
8	Channel	23-09-51
9	Support	23-09-47
10	Seal	23-63-33
11	Gasket	23-17-27
12	Knob	23-18-27
13	Retainer	23-58-573
14	Weatherstrip	23-58-572
15	Glass w/Front and Rear Frame	23-64-308
16	Weatherstrip	23-63-130
17	Weatherstrip	23-63-33
18	Retainer	23-63-42
19	Weatherstrip	23-63-15
20	Rivet	23-09-52
21	Regulator	23-39-29
22	Anti-Rattle	23-64-17
23	Stop	23-64-12
24	Spacer	23-14-24
25	Clip	23-18-42
26	Stud	23-64-275
27	Handle	23-14-53
28	Control	23-18-13
29	Spacer	23-14-24
30	Handle	23-14-27
31	Support	23-64-273
32	Screw	23-14-27
33	Regulator	23-39-5
34	Spacer	23-14-24
35	Handle	23-14-18
36	Link	23-18-11
37	Bumper	23-64-4
38	Gasket	23-09-54
39	Bracket	23-09-52
40	Stop	23-64-12
41	Retainer	23-18-35
42	Retainer	23-64-28
43	Bracket	23-64-12
44	Bumper	23-64-4
45	Seal	23-14-147
46	Plate	Not Serviced
47	Retainer	23-18-29
48	Link	23-18-20
49	Retainer	23-18-29
50	Link	23-18-26
51	Link	23-18-26
52	Seal	23-14-69
53	Lock	23-18-5
54	Base	23-14-68
55	Seal	23-63-33
56	Striker	23-08-60
57	Handle	23-14-10
58	Nut	
59	Washer	
60	Sleeve Nut	23-64-297
61	Track	23-64-299
62	Retainer	23-17-28
63	Support	23-64-269
64	Seal	23-14-147
65	Cylinder and Keys	23-17-2
66	Wedge	23-08-12
67	Striker	23-08-12
68	Bracket w/Roller	23-64-269
69	Regulator	23-41-4
70	Motor w/Mechanism	23-41-106
71	Regulator	23-41-4
72	Motor w/Mechanism	23-41-106
73	Motor w/Mechanism	23-64-75
74	Screw	23-14-18
75	Handle	23-14-18
76	Spacer	23-14-24
77	Regulator	23-39-14
78	Channel	23-64-198
79	Nut	
80	Washer	
81	Bracket	23-39-48
82	Washer	
83	Stud	23-64-275
84	Sleeve Nut	23-64-297
85	Bumper	23-64-4
86	Seal	23-64-202
87	Stop	23-64-12
88	Roller	23-39-45
89	Stop	23-64-12
90	Spring Nut	23-39-12
91	Cap	23-09-27

PARTS INDICATED BY NAME ONLY - ORDER BY DESCRIPTION

MyMopar.com

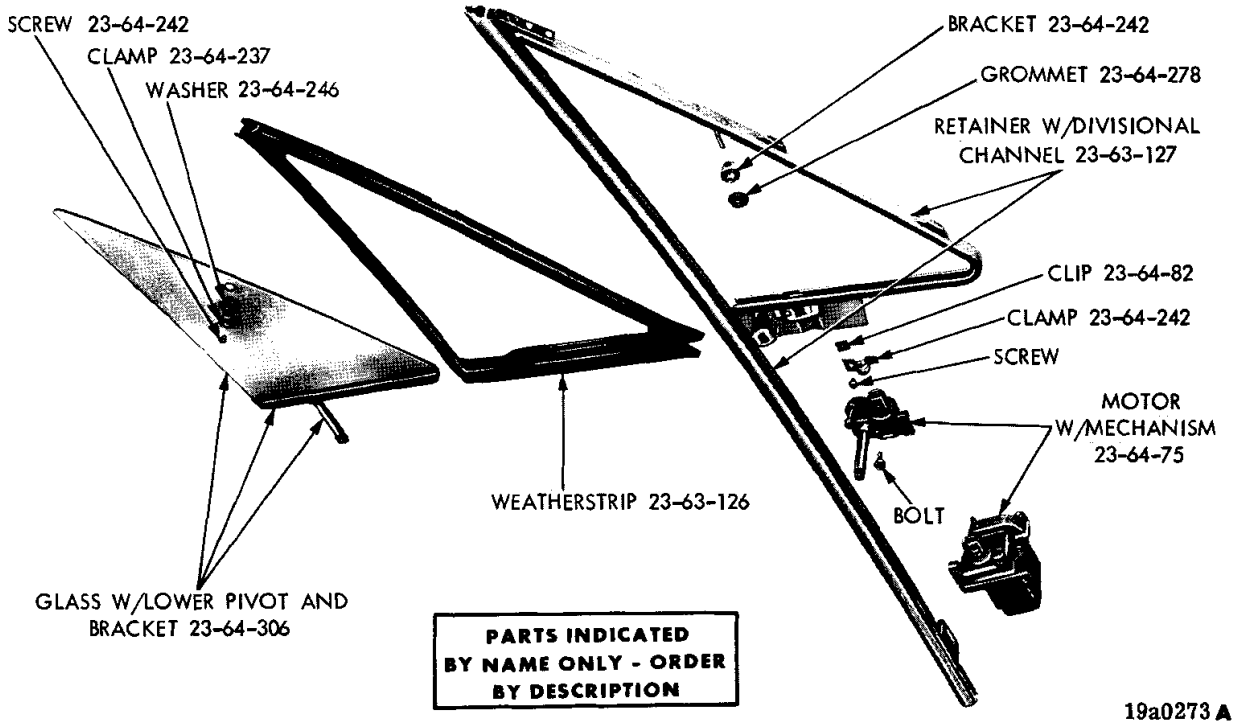

FRONT DOOR VENT WING AND GLASS - PLYMOUTH, DODGE AND CHRYSLER 2 DOOR SEDAN, 4 DOOR SEDAN AND STATION WAGON

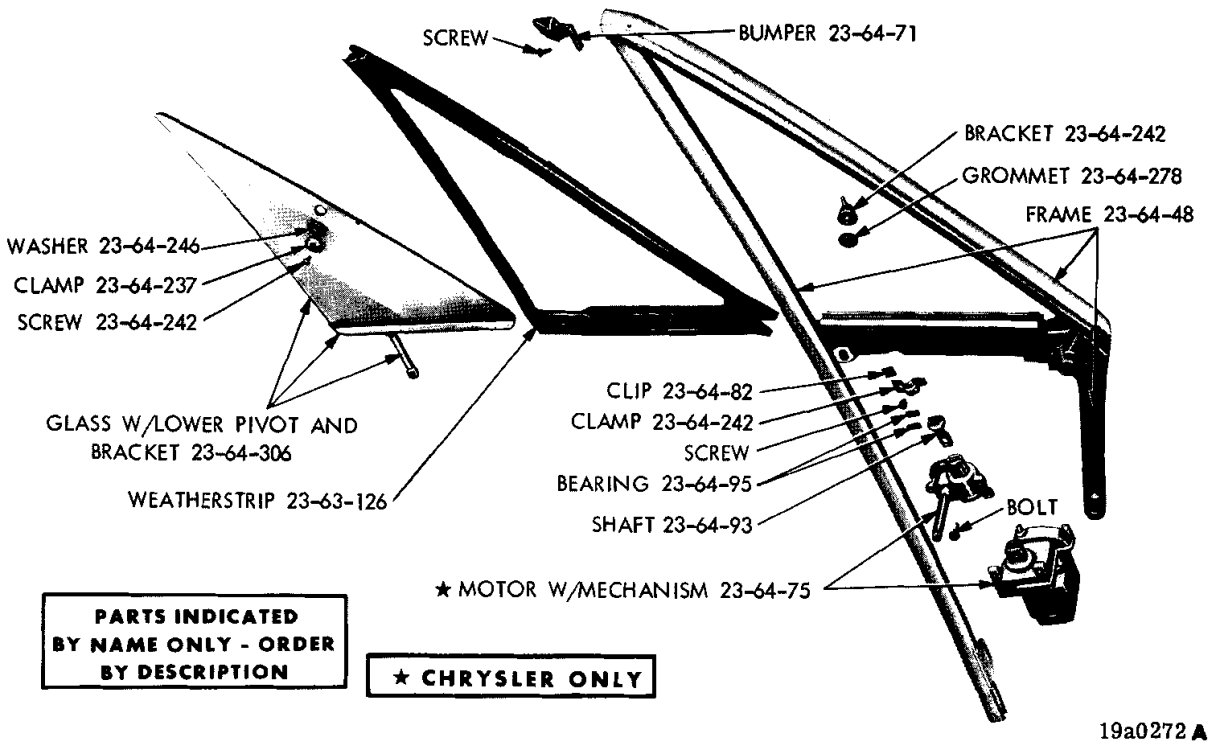

FRONT DOOR VENT WING AND GLASS - PLYMOUTH, DODGE AND CHRYSLER 2 DOOR HARDTOP, 4 DOOR HARDTOP AND CONVERTIBLE COUPE

MyMopar.com

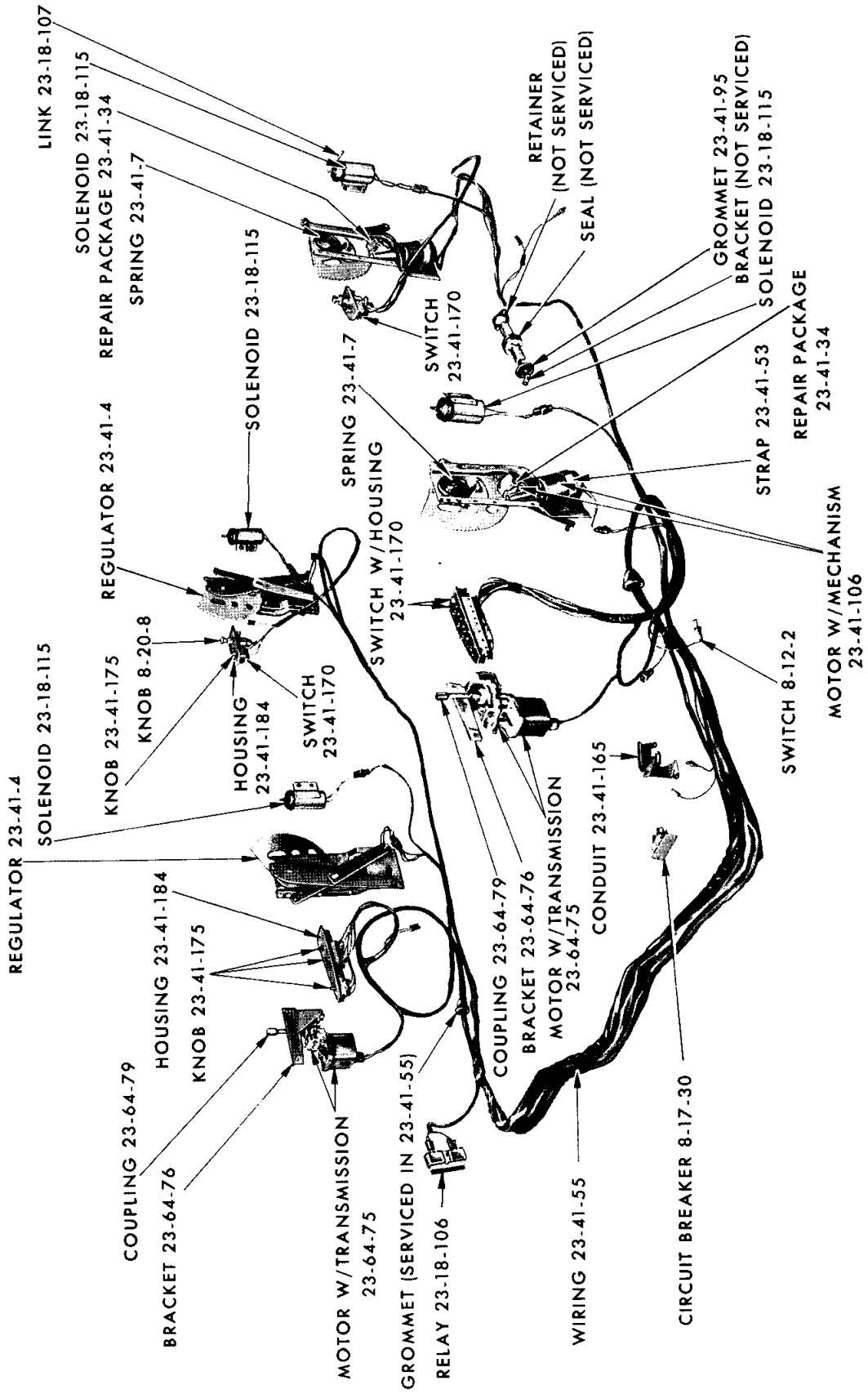

ELECTRIC WINDOW LIFT AND DOOR LOCK SYSTEM - IMPERIAL

MyMopar.com

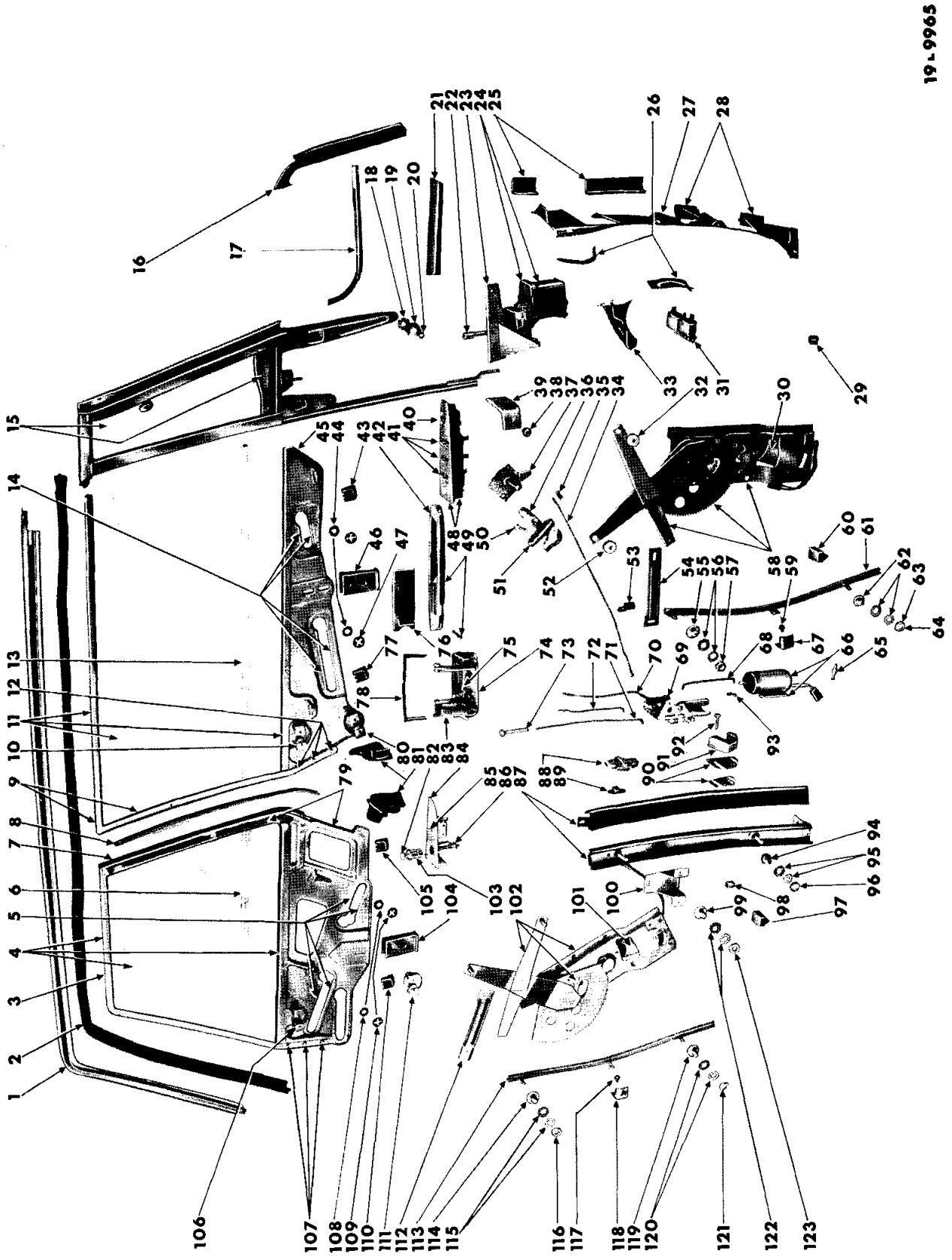

DOOR AND QUARTER WINDOW REGULATORS AND LOCKS - IMPERIAL 2 DOOR HARDTOP

MyMopar.com

DOOR AND QUARTER WINDOW REGULATORS AND LOCKS - IMPERIAL 2 DOOR HARDTOP

Ref. No.	Name	Part Type Code
1	Retainer	23-63-55
2	Weatherstrip	23-63-33
3	Frame	23-64-280
4	Glass w/Frame and Lower Channel	23-64-311
5	Cap	23-09-27
6	Weatherstrip	23-63-20
		23-63-21
7	Weatherstrip	23-63-104
8	Retainer	23-63-105
9	Frame	23-64-255
10	Bracket w/Roller	23-64-269
11	Glass w/Frame and Lower Channel	23-64-308
12	Sleeve Nut	23-64-255
13	Weatherstrip	23-63-14
		23-63-15
14	Cap	23-09-27
15	Glass w/Lower Pivot and Bracket	23-64-306
16	Auxiliary Weatherstrip	23-63-126
17	Cover Package	23-34-85
18	Stud	23-64-275
19	Washer	
20	Nut	
21	Filler	23-34-100
22	Coupling	23-64-79
23	Bracket	23-64-76
24	Motor w/Transmission	23-64-75
25	Anti Rattler	23-36-25
26	Seal	23-15-22
27	Cover	23-36-21
28	Anti Rattler	23-36-25
29	Bumper	23-08-12
30	Motor w/Mechanism	23-41-106
31	Relay	23-18-106
32	Roller	23-41-250
33	Conduit	23-41-165
34	Link	23-18-11
35	Clip	23-18-42
36	Handle	23-14-27
37	Remote Control	23-18-13
38	Screw	
39	Support	23-64-273
40	Knob	23-18-117
41	Knob	23-41-175
42	Plate	23-14-26
43	Stop	23-64-12
44	Washer	
45	Channel	23-09-52
46	Bracket	23-64-12
47	Spring Nut	23-41-4
48	Lockout Switch w/Housing	23-41-170
49	Handle	23-14-16
50	Screw	
51	Grommet	23-14-51
52	Roller	23-41-250
53	Clip	23-18-42
54	Channel w/Support	23-41-19
55	Sleeve Nut	23-64-297
56	Washer	
57	Nut	
58	Regulator	23-41-4
59	Screw	
60	Bumper	23-64-4
61	Channel	23-09-51
62	Sleeve Nut	23-64-297
63	Washer	
64	Nut	
65	Switch	8-12-2
66	Solenoid	23-18-115
67	Support	23-64-269
68	Link	23-18-107
69	Lock	23-18-5
70	Link	23-18-20
71	Link	23-18-26
72	Link	23-18-26
73	Knob	23-18-27
74	Handle	23-14-10
75	Bumper	23-14-153
76	Shield	Not Serviced
77	Stop	23-64-12
78	Gasket	23-14-147
79	Channel	23-09-9
80	Bracket w/Roller	23-64-269
81	Seal	23-63-33
82	Knob	8-20-8
83	Spring	23-14-17
84	Housing	23-41-184
85	Knob	23-41-175
86	Shell and Clamp	8-20-10
87	Channel	23-64-198
88	Wedge	23-08-12
89	Bumper	23-08-12
90	Spacer	23-08-54
91	Striker	23-08-60
92	Screw	
93	Clip	23-18-109
94	Sleeve Nut	23-64-297
95	Washer	
96	Nut	
97	Bumper	23-64-4
98	Bumper	23-08-12
99	Sleeve Nut	23-64-297
100	Support	23-64-200
101	Motor w/Mechanism	23-41-106
102	Regulator	23-41-4
103	Element	8-20-9
104	Bracket	23-64-12
105	Stop	23-64-12
106	Bracket w/Roller	23-64-269
107	Screw	23-64-280
108	Washer	
109	Spring Nut	23-41-4
110	Stop	23-64-12
111	Bracket w/Roller	23-64-269
112	Channel w/Support	23-41-19
113	Channel	23-09-75
114	Sleeve Nut	23-64-297
115	Washer	
116	Nut	
117	Screw	
118	Support	23-64-269
119	Sleeve Nut	23-64-297
120	Washer	
121	Nut	
122	Washer	
123	Nut	

PARTS INDICATED BY NAME ONLY - ORDER BY DESCRIPTION

MyMopar.com

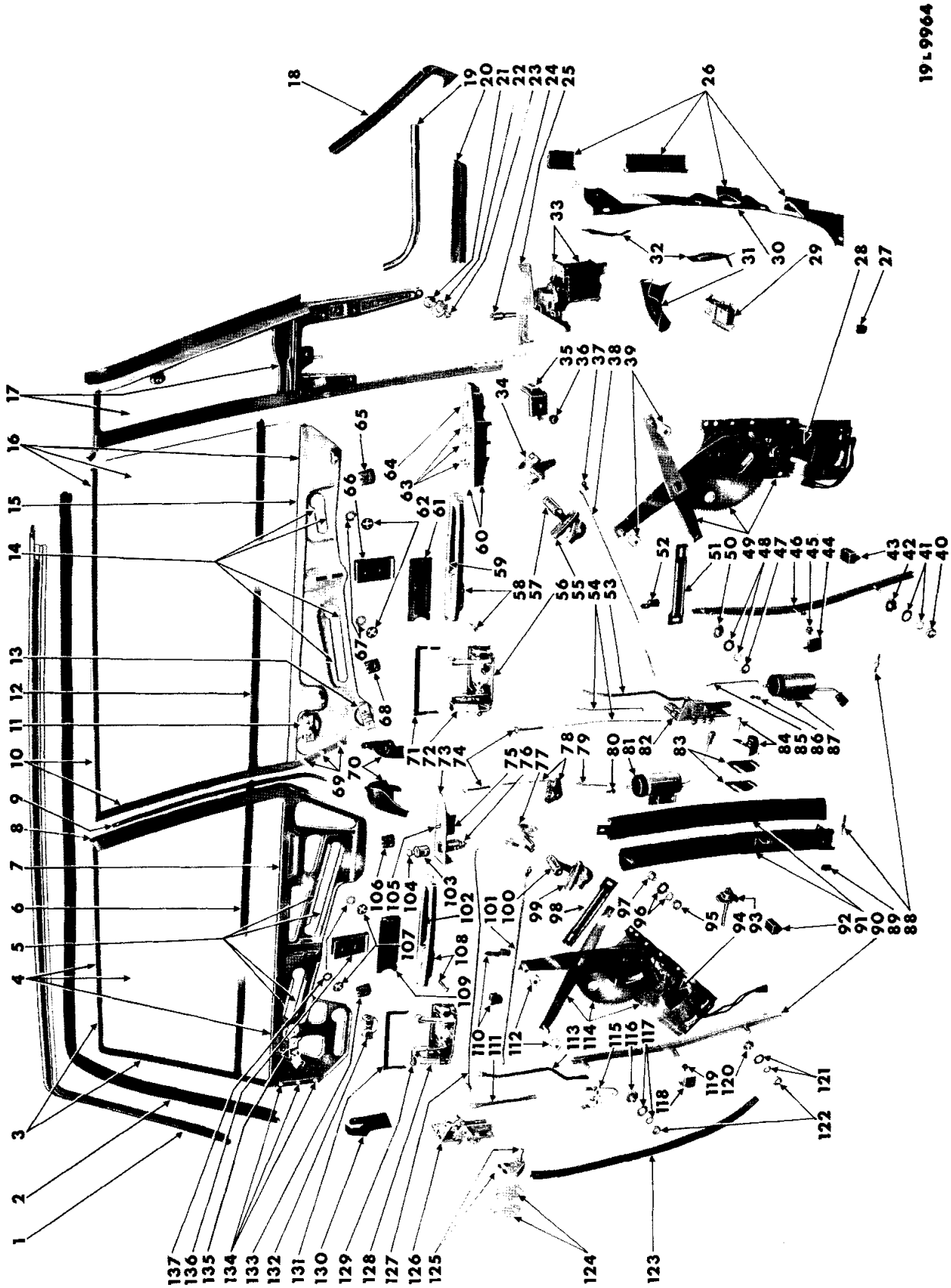

DOOR LOCKS, WINDOW REGULATORS AND RUNS - IMPERIAL 4 DOOR HARDTOP

MyMopar.com

DOOR LOCKS, WINDOW REGULATORS AND RUNS - IMPERIAL 4 DOOR HARDTOP

Ref. No.	Name	Part Type Code
1	Retainer	23-63-55
2	Weatherstrip	23-63-33
3	Frame	23-64-255
4	Glass w/Frame and Lower Channel	23-64-308
5	Cap	23-09-27
6	Weatherstrip	23-63-14
		23-63-15
7	Channel	23-09-58
8	Weatherstrip	23-63-94
9	Retainer	23-63-105
10	Frame	23-64-255
11	Bracket w/Roller	23-64-269
12	Weatherstrip	23-63-14
		23-63-15
13	Bracket w/Roller	23-64-269
14	Cap	23-09-27
15	Channel	23-09-52
16	Glass w/Frame and Lower Channel	23-64-308
17	Glass w/Lower Pivot and Bracket	23-64-306
18	Auxiliary Weatherstrip	23-63-126
19	Cover Package	23-34-85
20	Filler	23-34-100
21	Stud	23-64-275
22	Washer	
23	Nut	
24	Coupling	23-64-79
25	Bracket	23-64-76
26	Anti Rattler	23-36-25
27	Bumper	23-08-12
28	Motor w/Mechanism	23-41-106
29	Relay	23-18-106
30	Cover	23-36-21
31	Conduit	23-41-165
32	Seal	23-15-22
33	Motor w/Transmission	23-64-75
34	Remote Control	23-18-13
35	Support	23-64-273
36	Screw	
37	Clip	23-18-42
38	Link	23-18-11
39	Roller	23-41-250
40	Nut	
41	Washer	
42	Sleeve Nut	23-64-297
43	Bumper	23-64-4
44	Support	23-64-269
45	Screw	
46	Channel	23-09-51
47	Nut	
48	Washer	
49	Regulator	23-41-4
50	Sleeve Nut	23-64-297
51	Channel w/Support	23-41-19
52	Clip	23-18-42
53	Link	23-18-20
54	Link	23-18-26
55	Grommet	23-14-51
56	Handle	23-14-10
57	Handle	23-14-27
58	Handle	23-14-16
59	Plate	23-14-26
60	Lockout Switch w/Housing	23-41-170
61	Shield	Not Serviced
62	Spring Nut	23-41-4
63	Knobs	23-41-175
64	Knob	23-18-117
65	Stop	23-64-12
66	Bracket	23-64-12
67	Washer	
68	Stop	23-64-12
69	Sleeve Nut	23-64-255
70	Seal	23-63-33
71	Gasket	23-14-147
72	Spring	23-14-17
73	Housing	23-41-184
74	Knob	23-18-27
75	Switch	23-41-170
76	Shell and Clamp	8-20-10
77	Remote Control	23-18-13
78	Control	23-18-25
79	Link	23-18-107
80	Clip	23-18-109
81	Solenoid	23-18-115
82	Lock	23-18-5
83	Spacer	23-08-54
84	Striker	23-08-60
85	Link	23-18-107
86	Clip	23-18-109
87	Solenoid	23-18-115
88	Switch	8-12-2
89	Bumper	23-08-12
90	Channel	23-09-56
91	Channel	23-64-198
92	Bumper	23-64-4
93	Arm	23-10-1
94	Motor w/Mechanism	23-41-106
95	Nut	
96	Washer	
97	Sleeve Nut	23-64-297
98	Channel w/Support	23-41-19
99	Grommet	23-14-51
100	Handle	23-14-27
101	Link	23-18-26
102	Plate	23-14-26
103	Element	8-20-9
104	Knob	8-20-8
105	Knobs	23-41-175
106	Stop	23-64-12
107	Spring Nut	23-41-4
108	Handle	23-14-16
109	Shield	Not Serviced
110	Clip	23-18-42
111	Link	23-18-26
112	Roller	23-41-250
113	Link	23-18-20
114	Regulator	23-41-4
115	Bracket	23-18-51
116	Sleeve Nut	23-64-297
117	Washer	
118	Support	23-64-269
119	Screw	
120	Sleeve Nut	23-64-297
121	Washer	
122	Nut	
123	Weatherstrip	23-63-33
124	Spacer	23-08-54
125	Striker	23-08-60
126	Lock	23-18-5
127	Link	23-18-11
128	Spring	23-14-17
129	Handle	23-14-10
130	Seal	23-63-33
131	Gasket	23-14-147
132	Bracket w/Roller	23-64-269
133	Stop	23-64-12
134	Screw	23-64-255
135	Bracket w/Roller	23-64-269
136	Bracket	23-64-12
137	Washer	

PARTS INDICATED BY NAME ONLY - ORDER BY DESCRIPTION

MyMopar.com

19.9966

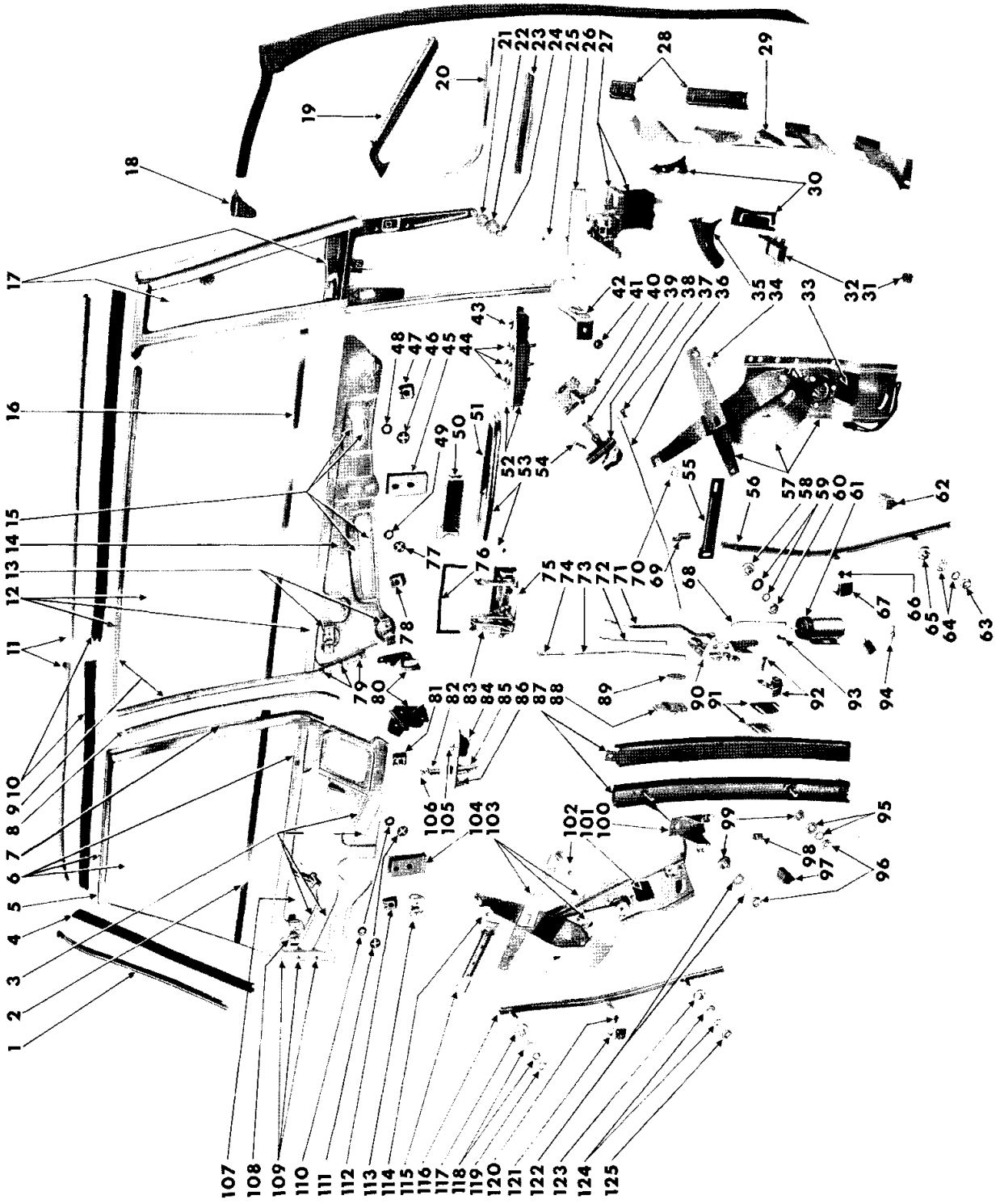

DOOR AND QUARTER WINDOW REGULATORS AND LOCKS - IMPERIAL CONVERTIBLE COUPE

MyMopar.com

DOOR AND QUARTER WINDOW REGULATORS AND LOCKS - IMPERIAL CONVERTIBLE COUPE

Ref. No.	Name	Part Type Code
1	Retainer	23-58-573
2	Weatherstrip	23-63-20
		23-63-21
3	Cap	23-09-27
4	Weatherstrip	23-58-572
5	Frame	23-64-280
6	Glass w/Frame and Lower Channel	23-64-311
7	Weatherstrip	23-63-104
8	Retainer	23-63-105
9	Frame	23-64-255
10	Weatherstrip	23-58-572
11	Retainer	23-58-573
12	Glass w/Frame and Lower Channel	23-64-308
13	Bracket w/Roller	23-64-269
14	Channel	23-09-52
15	Cap	23-09-27
16	Weatherstrip	23-63-14
		23-63-15
17	Glass w/Lower Pivot and Bracket	23-64-306
18	Weatherstrip	23-58-569
19	Auxiliary Weatherstrip	23-63-126
20	Cover Package	23-34-85
21	Stud	23-64-275
22	Washer	
23	Filler	23-34-100
24	Nut	
25	Coupling	23-64-79
26	Bracket	23-64-76
27	Motor w/Transmission	23-64-75
28	Anti Rattler	23-36-25
29	Cover	23-36-21
30	Seal	23-15-22
31	Bumper	23-08-12
32	Relay	23-18-106
33	Motor w/Mechanism	23-41-106
34	Roller	23-41-250
35	Conduit	23-41-165
36	Link	23-18-11
37	Clip	23-18-42
38	Grommet	23-14-51
39	Handle	23-14-27
40	Remote Control	23-18-13
41	Screw	
42	Support	23-64-273
43	Knob	23-18-117
44	Knob	23-41-175
45	Bracket	23-64-12
46	Spring Nut	23-41-4
47	Stop	23-64-12
48	Washer	
49	Washer	
50	Shield	Not Serviced
51	Plate	23-14-26
52	Lockout Switch w/Housing	23-41-170
53	Handle	23-14-16
54	Screw	
55	Channel w/Support	23-41-19
56	Channel	23-09-51
57	Regulator	23-41-4
58	Sleeve Nut	23-64-297
59	Washer	
60	Nut	
61	Solenoid	23-18-115
62	Bumper	23-64-4
63	Nut	
64	Washer	
65	Sleeve Nut	23-64-297
66	Screw	
67	Support	23-64-269
68	Link	23-18-107
69	Clip	23-18-42
70	Roller	23-41-250
71	Link	23-18-20
72	Link	23-18-26
73	Link	23-18-26
74	Knob	23-18-27
75	Handle	23-14-10
76	Gasket	23-14-147
77	Spring Nut	23-41-4
78	Stop	23-64-12
79	Sleeve Nut	23-64-255
80	Seal	23-63-33
81	Stop	23-64-12
82	Element	8-20-9
83	Spring	23-14-17
84	Switch	23-41-170
85	Shell and Clamp	8-20-10
86	Housing	23-41-184
87	Channel	23-64-198
88	Wedge	23-08-12
89	Bumper	23-08-12
90	Lock	23-18-5
91	Spacer	23-08-54
92	Striker	23-08-60
93	Clip	23-18-109
94	Switch	8-12-2
95	Washer	
96	Nut	
97	Bumper	23-64-4
98	Bumper	23-08-12
99	Sleeve Nut	23-64-297
100	Support	23-64-200
101	Motor w/Mechanism	23-41-106
102	Roller	23-41-250
103	Regulator	23-41-4
104	Bracket	23-64-12
105	Knob	23-41-175
106	Knob	8-20-8
107	Channel	23-09-9
108	Bracket w/Roller	23-64-269
109	Screw	23-64-280
110	Washer	
111	Spring Nut	23-41-4
112	Stop	23-64-12
113	Bracket w/Roller	23-64-269
114	Roller	23-41-250
115	Channel w/Support	23-41-19
116	Channel	23-09-75
117	Sleeve Nut	23-64-297
118	Washer	
119	Nut	
120	Screw	
121	Support	23-64-269
122	Washer	
123	Sleeve Nut	23-64-297
124	Washer	
125	Nut	

PARTS INDICATED BY NAME ONLY - ORDER BY DESCRIPTION

MyMopar.com

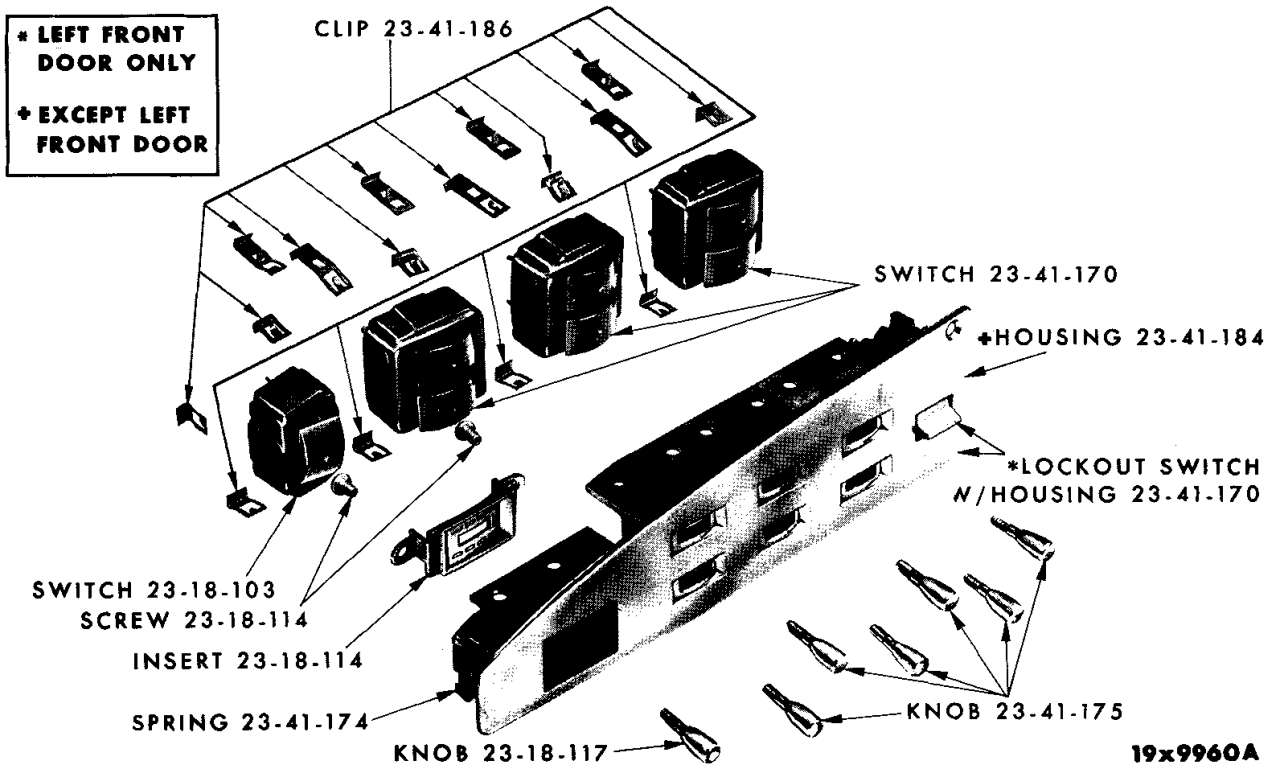

ELECTRIC WINDOW LIFT AND DOOR LOCK SWITCH - IMPERIAL

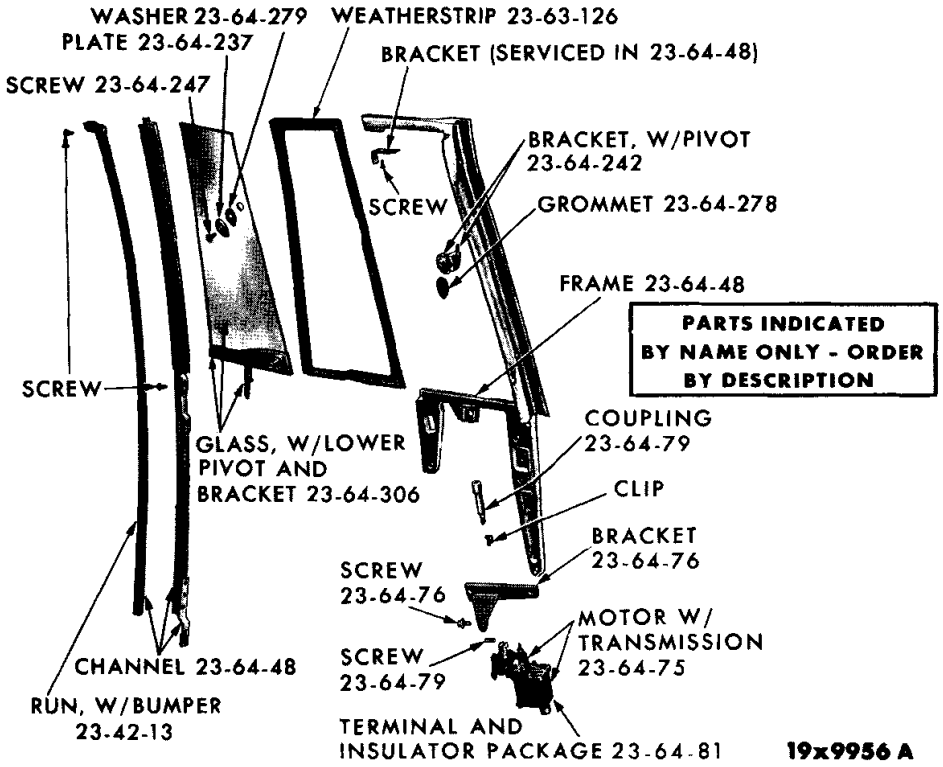

FRONT DOOR VENT WING AND GLASS - IMPERIAL

MyMopar.com

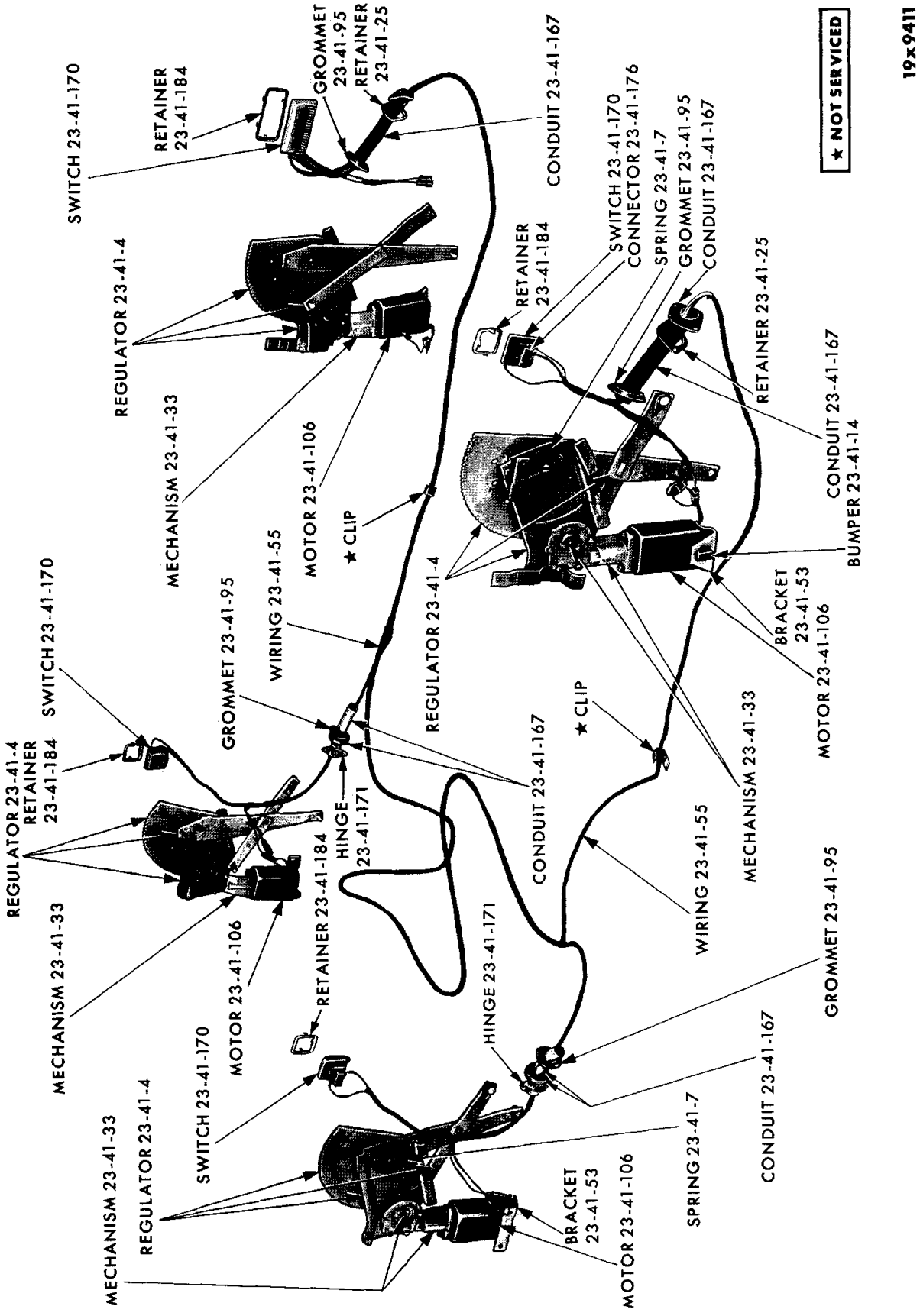

POWER WINDOWS

MyMopar.com

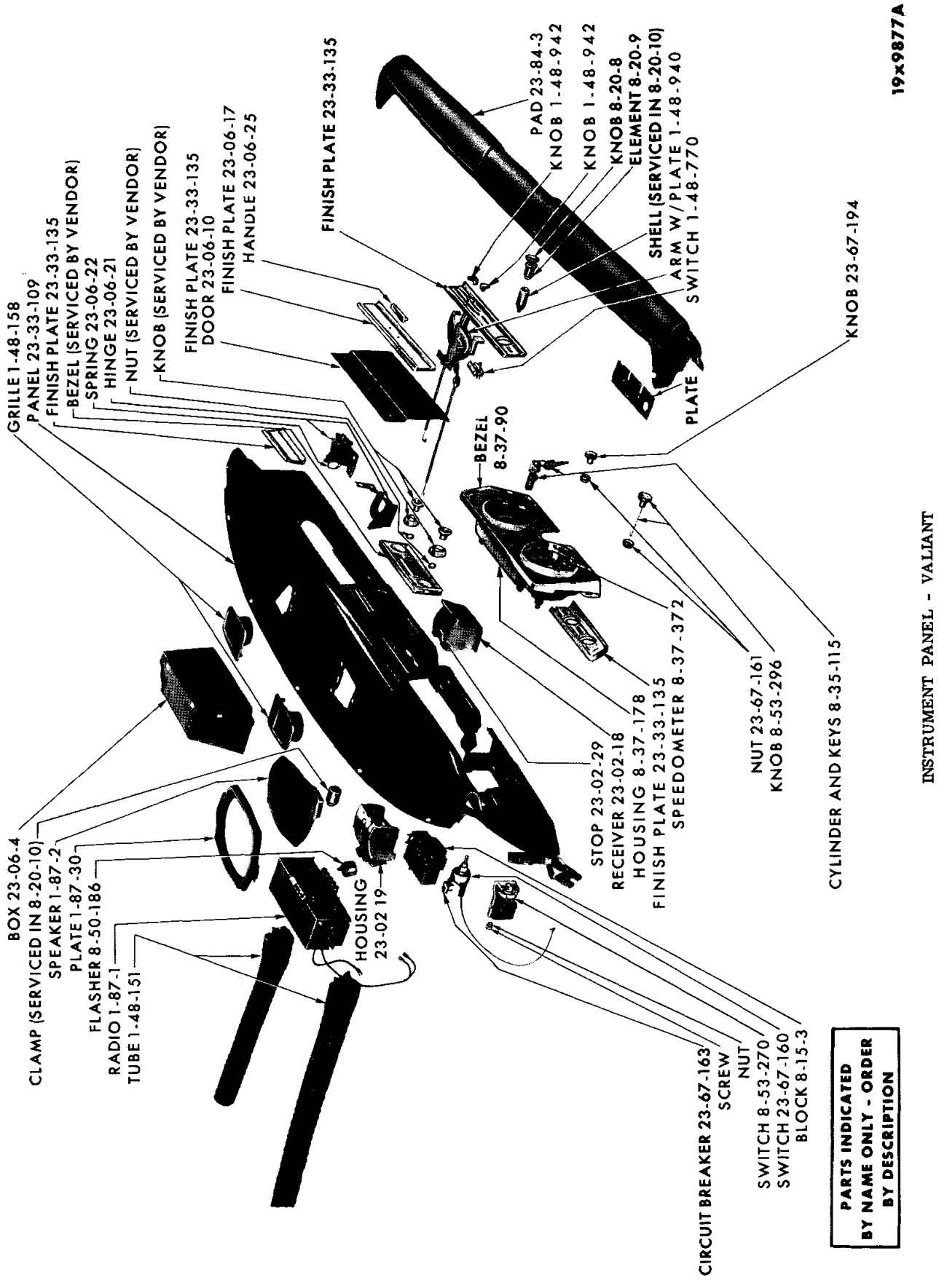

INSTRUMENT PANEL - VALIANT

MyMopar.com

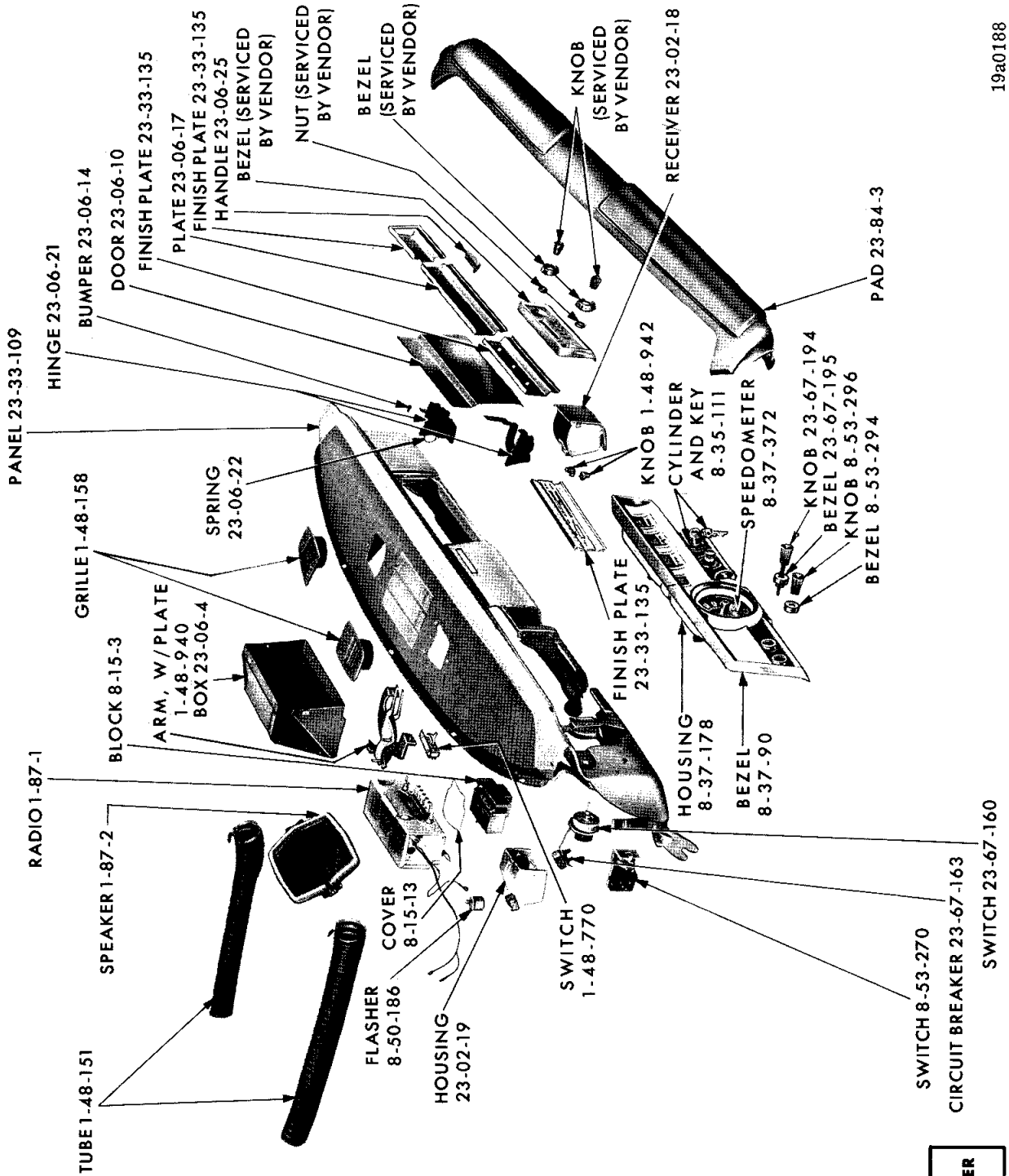
19a0188
PANEL 23-33-109
HINGE 23-06-21
BUMPER 23-06-14
DOOR 23-06-10
FINISH PLATE 23-33-135
PLATE 23-06-17
FINISH PLATE 23-33-135
HANDLE 23-06-25
BEZEL (SERVICED BY VENDOR)
NUT (SERVICED BY VENDOR)
BEZEL (SERVICED BY VENDOR)
KNOB (SERVICED BY VENDOR)
RECEIVER 23-02-18
PAD 23-84-3
SPRING 23-06-22
GRILLE 1-48-158
ARM, W/PLATE 1-48-940
BOX 23-06-4
BLOCK 8-15-3
RADIO 1-87-1
SPEAKER 1-87-2
TUBE 1-48-151
FLASHER 8-50-186
COVER 8-15-13
HOUSING 23-02-19
SWITCH 1-48-770
FINISH PLATE 23-33-135
KNOB 1-48-942
CYLINDER AND KEY 8-35-111
SPEEDOMETER 8-37-372
KNOB 23-67-194
BEZEL 23-67-195
KNOB 8-53-296
BEZEL 8-53-294
HOUSING 8-37-178
BEZEL 8-37-90
SWITCH 8-53-270
CIRCUIT BREAKER 23-67-163
SWITCH 23-67-160
INSTRUMENT PANEL - DART
PARTS INDICATED BY NAME ONLY - ORDER BY DESCRIPTION

MyMopar.com

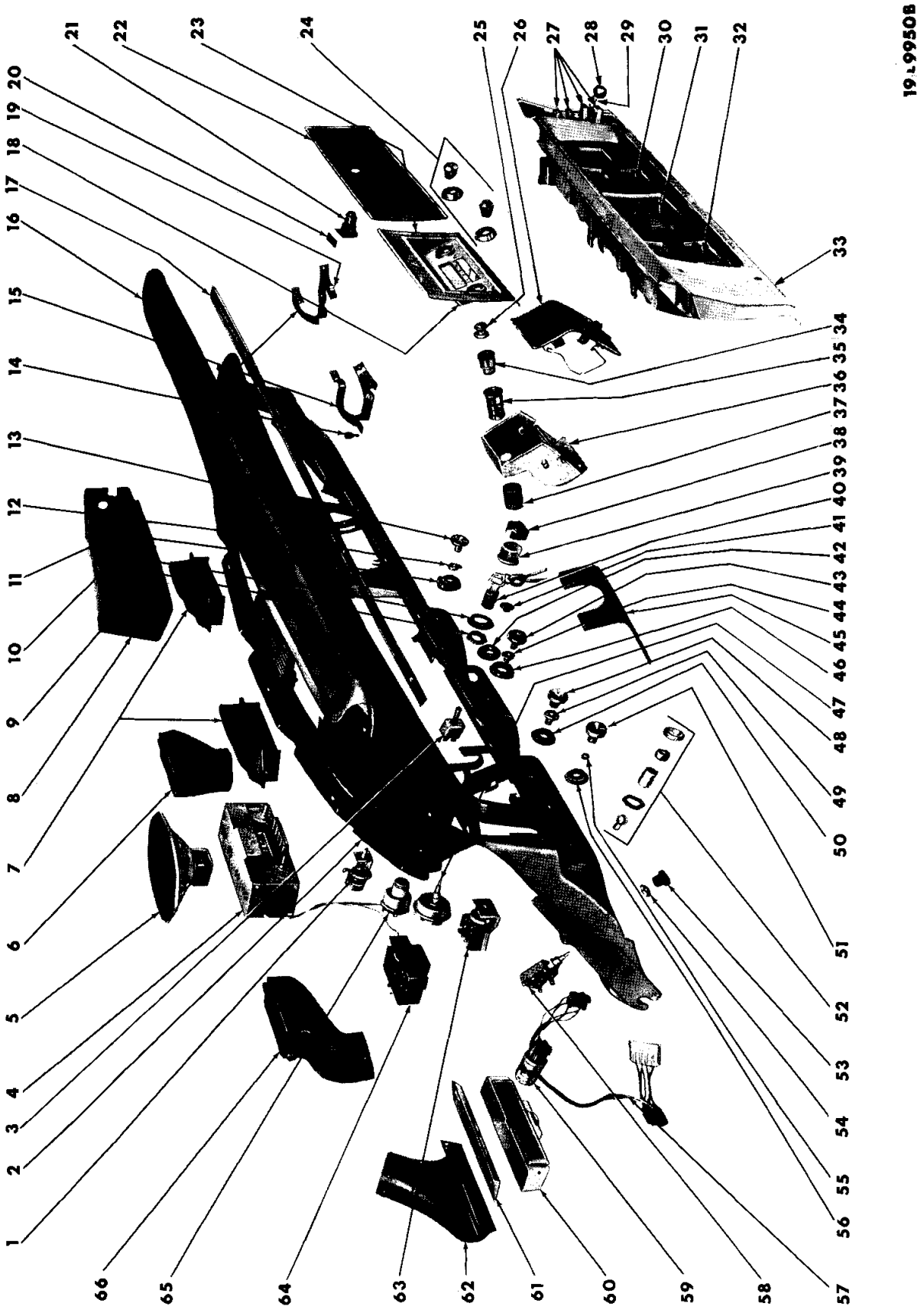

INSTRUMENT PANEL - BELVEDERE

MyMopar.com

INSTRUMENT PANEL - BELVEDERE

Ref. No.	Name	Part Type Code
1	Switch	1-48-770
2	Panel	23-33-109
3	Switch	23-54-167
		23-58-532
4	Radio	1-87-1
5	Speaker	1-87-2
6	Connector	24-28-55
7	Bezel and Louver	24-28-75
8	Box	23-06-4
9	Retainer	8-35-95
10	Bezel	8-35-85
11	Bezel	
12	Nut	
13	Knob	1-48-801
14	Bumper	23-06-14
15	Hinge	23-06-21
16	Pad	23-84-3
17	Moulding	23-33-86
18	Bezel	1-87-22
19	Retainer	23-06-68
20	Catch	23-06-15
21	Latch	23-06-28
22	Door	23-06-10
23	Bezel	1-87-22
24	Knob and Bezel (Serviced by Vendor)	
25	Knob	8-20-8
26	Receiver	23-02-18
27	Button	1-48-12
28	Knob	1-48-942
29	Arm, w/Plate	1-48-940
30	Ammeter	8-37-1
31	Speedometer	8-37-372
32	Fuel Gauge	8-37-275
33	Bezel	8-37-90
34	Element	8-20-9
35	Shell (Serviced in 8-20-10)	
36	Housing	23-02-19
37	Clamp (Serviced in 8-20-10)	
38	Clip	8-50-191
39	Flasher	8-50-186
40	Cylinder Package	8-35-111
41	Nut	23-54-171
		23-58-533
42	Bezel	23-54-170
		23-58-543
43	Knob	23-67-194
44	Nut	23-67-161
45	Cover	23-33-132
46	Bezel	23-67-195
47	Switch	23-67-160
48	Knob	8-53-296
49	Retainer	8-53-312
50	Bezel	8-53-294
51	Knob	4-25-3
52	Lamp Package	1-09-1
53	Knob	1-06-4
54	Nut (Serviced in 1-06-3)	
55	Nut	
56	Bezel	
57	Wiring	1-06-10
58	Switch	1-06-3
59	Flasher	1-06-2
60	Spot Cooler	24-28-382
61	Spacer	24-28-389
62	Connector	24-28-55
63	Switch	8-53-270
64	Block	8-15-3
65	Switch	8-35-59
66	Connector	24-28-55

PARTS INDICATED BY NAME ONLY - ORDER BY DESCRIPTION

MyMopar.com

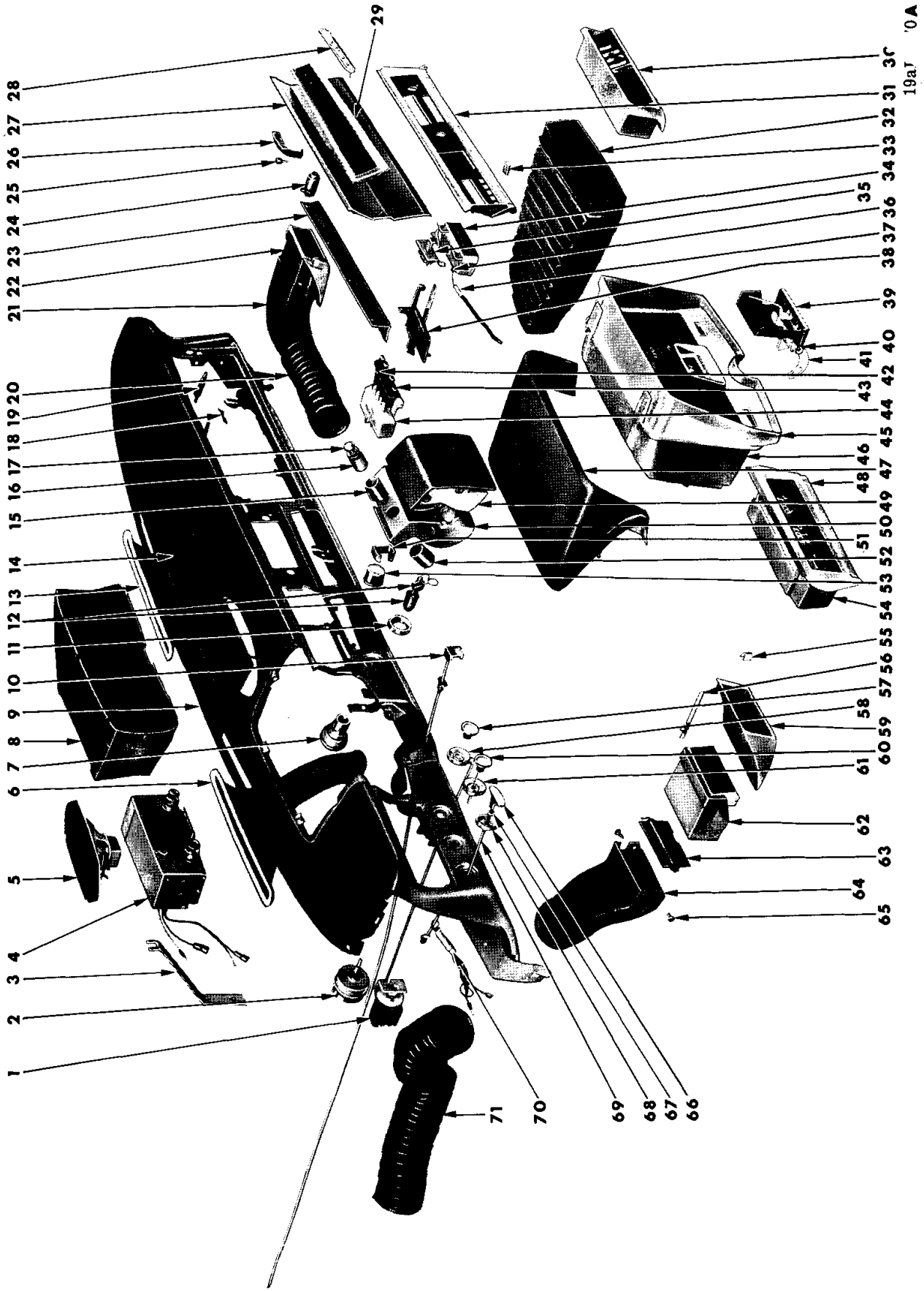

INSTRUMENT PANEL - PLYMOUTH FURY

MyMopar.com

INSTRUMENT PANEL - PLYMOUTH FURY

Ref. No.	Name	Part Type Code
1	Switch	8-53-270
2	Switch	23-67-160
3	Bracket	Not Serviced
4	Radio	1-87-1
5	Speaker	1-87-2
6	Nozzle	
7	Switch	8-35-59
8	Box	23-06-04
9	Panel	23-33-109
10	Cable	24-01-65
11	Bezel	
12	Cylinder and Keys	8-35-115
13	Nozzle	
14	Grille	23-33-42
15	Shell (Serviced in 8-20-10)	
16	Element	8-20-9
17	Knob	8-20-8
18	Catch	23-06-15
19	Lamp	8-38-23
20	Hose	24-28-24
21	Connector	
22	Spot Cooler	24-28-387
23	Hinge	23-06-21
24	Cylinder	23-06-28
25	Bumper	23-06-14
26	Arm	23-06-13
27	Door	23-06-10
28	Name Plate	23-06-53
29	Bezel	23-06-55
30	Air Outlet	24-28-78
31	Bezel	23-33-135
32	Duct	24-28-73
33	Knob	24-24-156
34	Indicator	24-24-175
35	Switch	24-24-5
36	Lamp	
37	Wiring	
38	Plate	24-24-159
39	Indicator	21-30-23
40	Grommet	21-30-57
41	Link	21-30-49
42	Pad	
43	Button	24-24-164
44	Switch	24-24-150
45	Bezel	8-37-90
46	Housing	8-37-178
47	Housing	8-37-178
48	Bezel	8-37-90
49	Receiver	23-02-18
50	Housing	23-02-19
51	Clip	8-50-191
52	Clamp (Serviced in 8-20-10)	
53	Flasher	8-50-186
54	Housing	8-37-178
55	Knob	24-28-404
56	Link (Serviced in 24-28-387)	
57	Knob	23-67-194
58	Bezel	
59	Bezel (Serviced in 24-28-387)	
60	Knob	8-53-296
61	Bezel	
62	Spot Cooler	24-28-387
63	Door (Serviced in 24-28-387)	
64	Connector	
65	Screw (Serviced in 24-28-387)	
66	Knob	4-25-3
67	Washer	4-25-5
68	Bezel	
69	Rod	4-25-14
70	Lamp	8-31-2
71	Hose	24-28-24

PARTS INDICATED BY NAME ONLY - ORDER BY DESCRIPTION

MyMopar.com

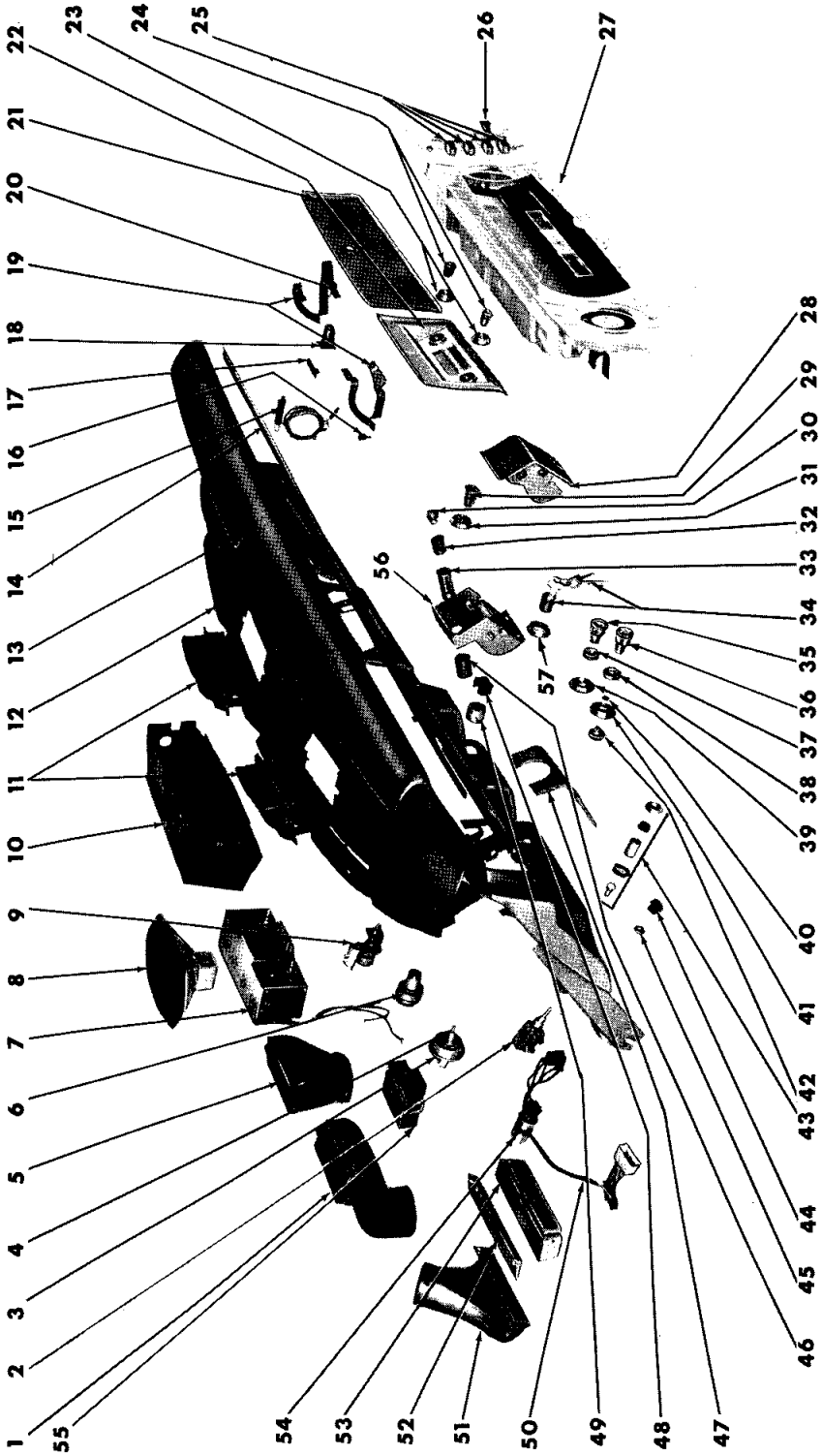

INSTRUMENT PANEL - CORONET

MyMopar.com

INSTRUMENT PANEL - CORONET

Ref. No.	Name	Part Type Code
1	Connector	24-28-55
2	Switch	1-06-3
3	Switch	23-67-160
4	Switch	1-82-2
5	Connector	24-28-55
6	Switch	8-35-59
7	Radio	1-87-1
8	Speaker	1-87-2
9	Switch	1-48-770
10	Box	23-06-4
11	Louver	24-28-78
12	Panel	23-33-109
13	Pad	23-84-3
14	Moulding	23-33-86
15	Lamp, w/Switch	8-38-23
16	Bumper	23-06-14
17	Catch	23-06-15
18	Latch	23-06-28
19	Hinge	23-06-21
20	Retainer	23-06-68
21	Door	23-06-10
22	Bezel	1-87-22
23	Bezel (Serviced by Vendor)	
24	Knob (Serviced by Vendor)	
25	Button	1-48-12
26	Knob	1-48-942
27	Bezel	8-37-90
28	Receiver	23-02-18
29	Knob	1-48-801
30	Knob	8-20-8
31	Bezel	1-48-70
32	Element	8-20-9
33	Shell (Serviced in 8-20-10)	
34	Cylinder Package	8-35-111
35	Knob	23-67-194
36	Knob	4-25-3
37	Bezel	23-67-195
38	Bezel	23-33-231
39	Bezel	23-67-195
40	Washer	4-25-5
41	Bezel	23-33-231
42	Nut	23-33-236
43	Lamp Package	1-09-1
44	Knob	1-06-4
45	Nut (Serviced in 1-06-3)	
46	Clamp (Serviced in 8-20-10)	
47	Cover	23-33-132
48	Clip	8-50-191
49	Flasher	8-50-186
50	Wiring (Serviced in 1-06-1)	
51	Connector	24-28-55
52	Spacer	24-28-389
53	Spot Cooler	24-28-387
54	Flasher	1-06-2
55	Block	8-15-3
56	Housing	23-02-19
57	Bezel	8-35-85

PARTS INDICATED BY NAME ONLY - ORDER BY DESCRIPTION

MyMopar.com

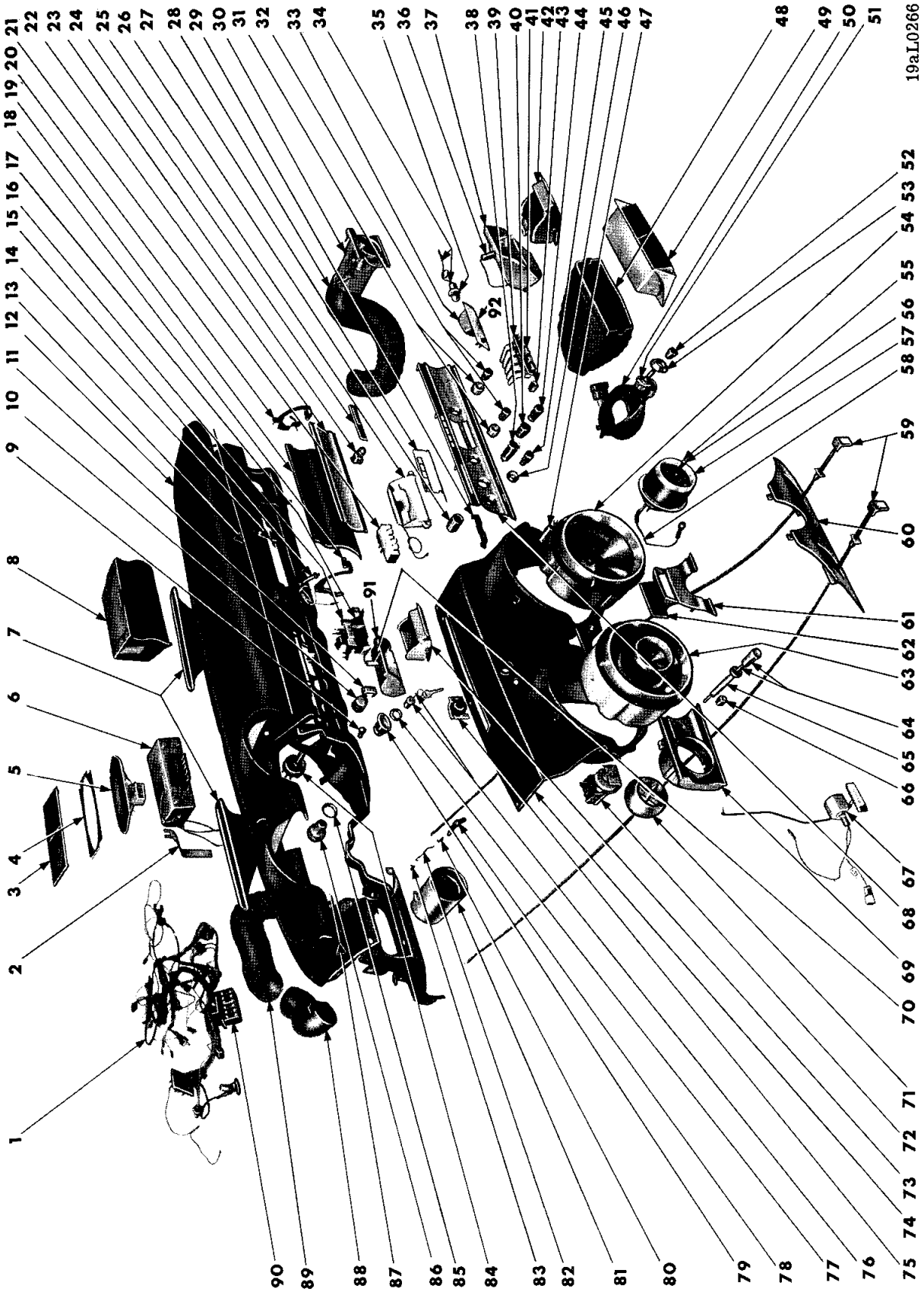

INSTRUMENT PANEL - DODGE POLARA

MyMopar.com

INSTRUMENT PANEL - DODGE POLARA

Ref. No.	Name	Part Type Code
1	Wiring	8-19-3
2	Bracket	1-87-12
3	Grille	23-33-42
4	Plate	1-87-30
5	Speaker	1-87-2
6	Radio	1-87-1
7	Nozzle	
8	Box	23-06-4
9	Knob	1-48-942
10	Flasher	8-50-186
11	Clip	8-50-191
12	Panel	23-33-109
13	Moulding	23-33-86
14	Catch	23-06-15
15	Lamp	8-38-23
16	Switch	24-24-5
17	Plate	24-24-159
18	Hinge	23-06-21
19	Door	23-06-10
20	Hinge	23-06-21
21	Switch	24-24-150
22	Moulding	23-06-49
23	Latch	23-06-28
24	Name Plate	23-06-53
25	Housing	24-01-18
26	Clamp (Serviced in 8-20-10)	
27	Cover	24-01-44
28	Hose	24-28-24
29	Plate	
30	Spot Cooler	24-28-387
31	Bezel	1-87-22
32	Knob	1-87-180
33	Housing (Serviced in 8-42-1)	
34	Socket and Cable	8-42-10
35	Bulb	8-44-1
36	Socket and Cable	8-19-83
37	Housing	23-02-19
38	Shell (Serviced in 8-20-10)	
39	Pad	
40	Element	8-20-9
41	Button	24-28-164
42	Receiver	23-02-18
43	Knob	24-24-20
44	Knob	8-20-8
45	Knob	23-67-194
46	Bezel	23-67-195
47	Socket	8-50-156
48	Duct	24-28-73
49	Air Outlet, Center	24-28-78
50	Wiring	1-87-404
51	Control	1-87-58
52	Knob	1-87-180
53	Bezel	1-87-22
54	Bezel	8-37-90
55	Knob	1-21-24
56	Nut	1-21-27
57	Bezel	23-33-48
58	Wiring (Serviced in 1-21-1)	
59	Control	24-24-39
60	Cover	23-33-132
61	Moulding	23-33-86
62	Cover	
63	Bezel	8-37-90
64	Knob	8-53-296
65	Bezel	8-53-294
66	Knob	24-28-404
67	Lamp Package	1-09-1
68	Moulding	23-33-86
69	Bezel (Serviced in 2521 353)	
70	Socket and Cable	8-19-83
71	Louver (Serviced in 24-28-387)	
72	Switch	8-53-270
73	Receiver	23-02-18
74	Housing	8-37-178
75	Lamp	
76	Cylinder Package	8-35-111
77	Retainer	8-35-95
78	Lever (Serviced in 24-28-387)	
79	Bezel	
80	Clip	24-28-387
81	Housing (Serviced in 24-28-387)	
82	Rod (Serviced in 24-28-387)	
83	Clip	24-28-387
84	Switch	23-67-160
85	Nut	8-35-61
86	Switch	8-35-59
87	Moulding	23-33-86
88	Connector	
89	Hose	24-28-24
90	Block	8-15-3
91	Housing	23-02-19
92	Lens	8-42-5

PARTS INDICATED BY NAME ONLY - ORDER BY DESCRIPTION

MyMopar.com

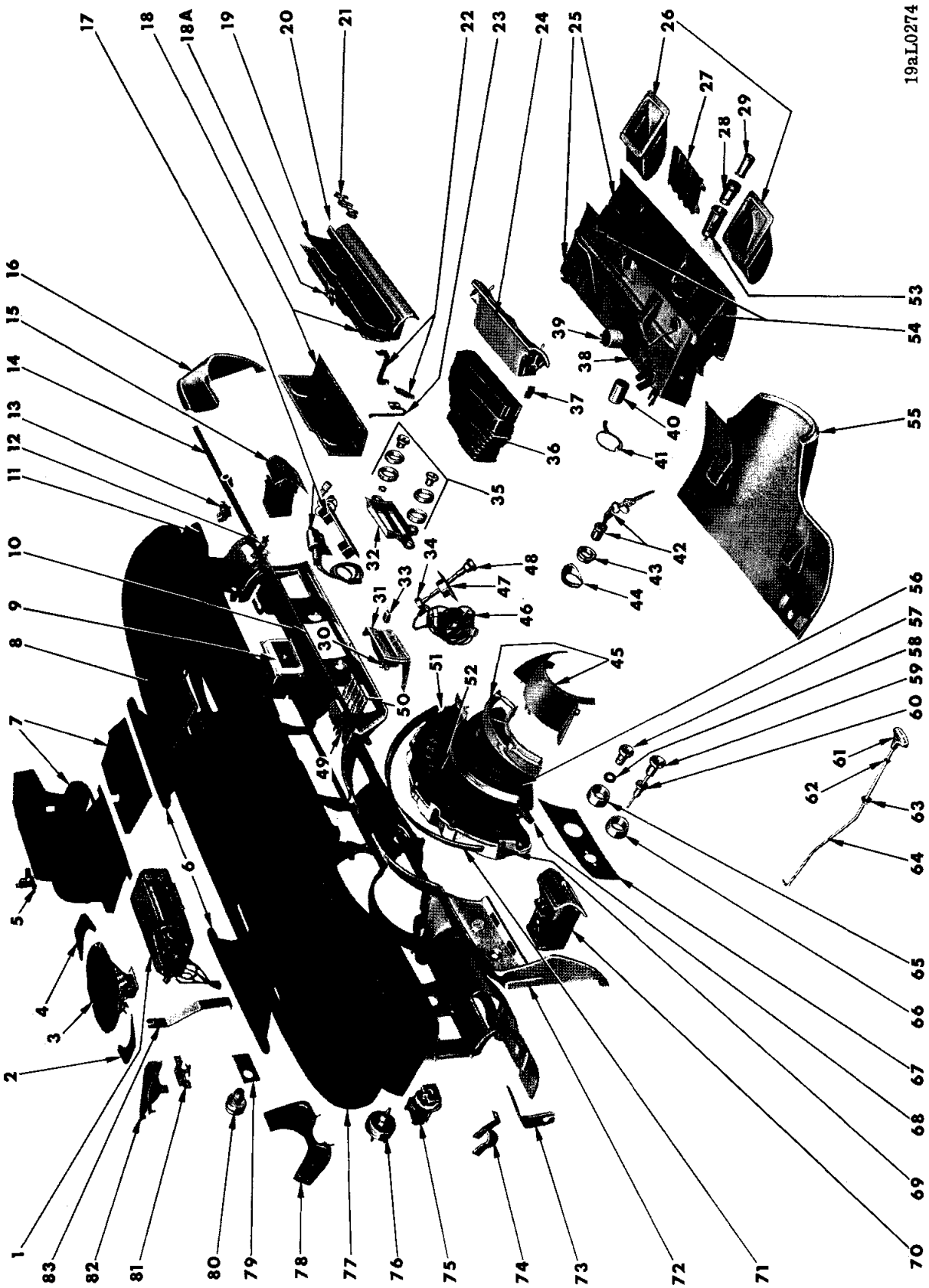

INSTRUMENT PANEL - CHRYSLER

MyMopar.com

INSTRUMENT PANEL - CHRYSLER

Ref. No.	Name	Part Type Code
1	Radio	1-87-1
2	Bracket	1-87-12
3	Speaker	1-87-2
4	Bracket	1-87-12
5	Switch	23-19-94
6	Nozzle	
7	Box	23-06-04
8	Grille	23-33-42
9	Clock	1-21-1
10	Moulding and Finish Plate	23-33-86
	Finish Plate	23-33-135
11	Panel	23-33-109
12	Lamp	8-38-23
13	Cylinder	23-06-28
14	Moulding	23-33-86
15	Spot Cooler	24-28-387
16	Finish Plate	23-33-135
17	Switch	8-42-25
18	Door	23-06-10
18A	Plate	23-06-15
19	Finish Plate	23-06-17
20	Moulding	23-06-49
21	Name Plate	23-06-53
22	Hinge	23-06-21
23	Spring	23-06-22
24	Air Outlet	24-28-78
25	Receiver (Complete)	23-02-18
26	Receiver	23-02-18
27	Retainer	23-02-33
28	Element	8-20-9
29	Knob	8-20-8
30	Switch	24-24-5
31	Bezel	24-24-140
32	Bezel (Serviced by Vendor)	
33	Button	Not Serviced
34	Control, Rear Speaker	1-87-58
35	Knobs (Serviced by Vendor)	
36	Duct	24-28-73
37	Clip	24-28-72
38	Clip	8-50-191
39	Flasher	8-50-186
40	Clamp (Serviced in 8-20-10)	
41	Wiring	Not Serviced
42	Cylinder and Key	8-35-115
43	Nut	
44	Bezel	
45	Filler	23-33-132
46	Wiring	1-87-404
47	Bezel	
48	Knob	1-87-180
49	Switch	24-24-150
50	Button	24-24-164
51	Lens	8-37-162
52	Speedometer	8-37-372
53	Shell (Serviced in 8-20-10)	
54	Socket and Cable	8-19-83
55	Cover	23-33-132
56	Mask and Dial	8-37-98
57	Knob	23-67-194
58	Nut	23-67-161
59	Knob	8-53-296
60	Nut	
61	Knob, Parking Brake Lever Release	4-25-3
62	Washer, Release Knob Lever Silencing	4-25-5
63	Bushing, Lever Release Rod	4-25-10
64	Rod, Release at Knob	4-25-14
65	Bezel	
66	Bezel	
67	Finish Plate	23-33-135
68	Moulding	23-33-86
69	Housing	8-37-178
70	Spot Cooler	24-28-387
71	Moulding	23-33-86
72	Finish Plate	23-33-135
73	Bracket	23-07-169
74	Clip	8-15-32
75	Switch	8-53-270
76	Switch	23-67-160
77	Pad	23-108-84
78	Bracket	19-31-1
79	Plate	
80	Switch	8-35-59
81	Heater Switch	1-48-770
82	Arm w/Plate	1-48-940
83	Bracket	Not Serviced

PARTS INDICATED BY NAME ONLY - ORDER BY DESCRIPTION

MyMopar.com

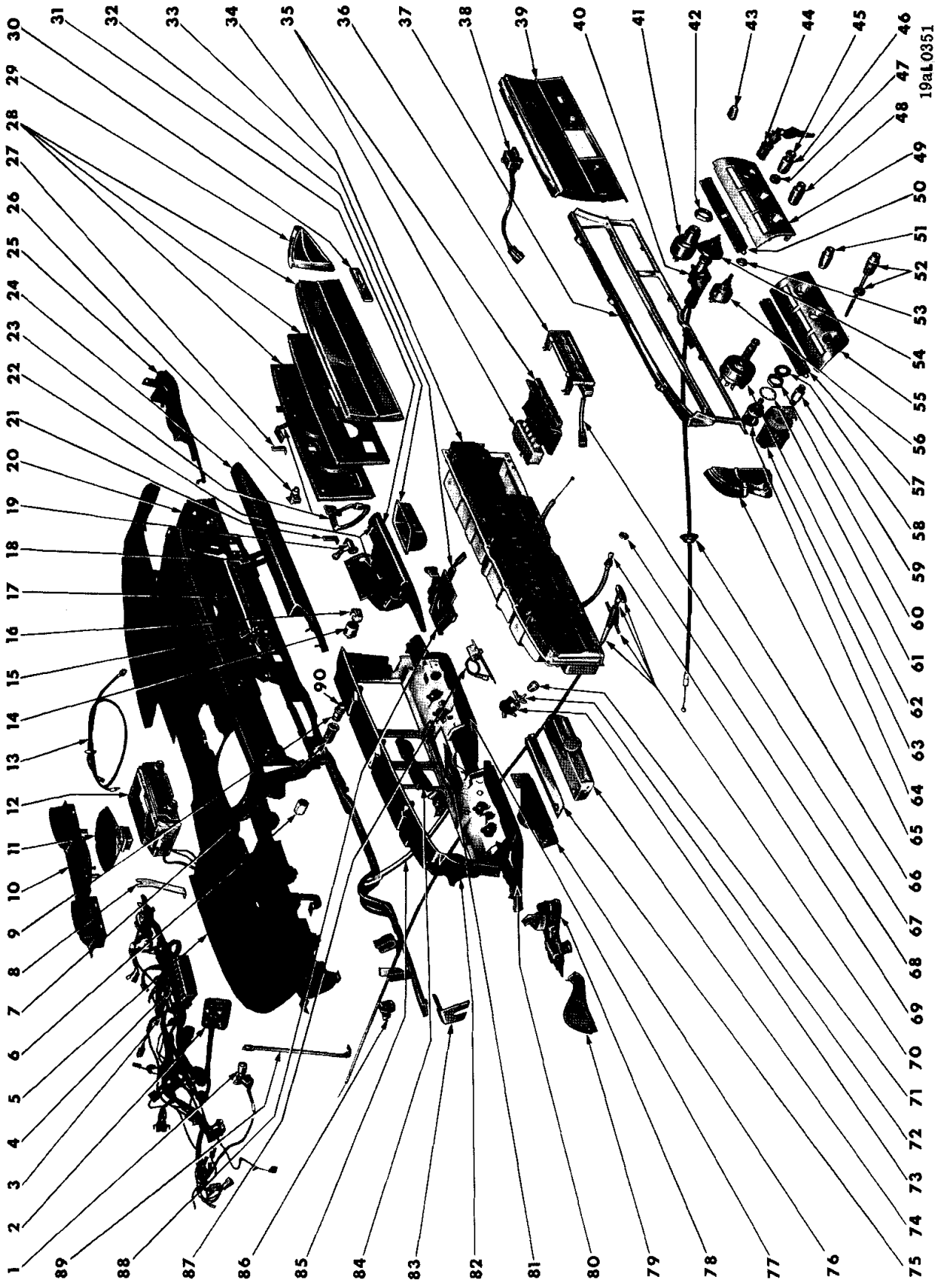

INSTRUMENT PANEL - IMPERIAL

MyMopar.com

INSTRUMENT PANEL - IMPERIAL

Ref. No.	Name	Part Type Code
1	Switch	8-53-150
2	Cover	8-15-13
3	Wiring	8-19-3
4	Block	8-15-3
5	Pad	23-84-3
6	Clamp (Serviced in 8-20-10)	
7	Shell (Serviced in 8-20-10)	
8	Radio Support	Not Serviced
9	Element	8-20-9
10	Grille	23-33-42
11	Speaker	1-87-2
12	Radio	1-87-1
13		
14	Flasher	8-50-186
15	Lamp	8-38-23
16	Clip	8-50-191
17	Box	23-06-4
18	Bracket	23-07-169
19	Socket and Cable	8-19-83
20	Panel	23-33-109
21	Catch	23-06-15
22	Door and Housing	23-02-40
23	Hinge	23-06-21
24	Pad	23-84-3
25	Extension	23-33-109
26	Latch	23-06-28
27	Catch	23-06-15
28	Door	23-06-10
29	Finish Plate	23-33-135
30	Name Plate	23-06-53
31	Pad	23-84-3
32	Receiver	23-02-18
33	Sleeve	Not Serviced
34	Cluster	8-37-371
35	Push Buttons	1-48-12
36	Bezel	1-48-70
37	Bezel	8-37-90
38	Switch	1-88-205
39	Finish Plate	23-33-135
40	Control	14-02-2
41	Switch	8-35-59
42	Nut	8-35-61
43	Knob	1-48-942
44	Cylinder and Key	8-35-115
45	Button	14-02-3
46	Knob	14-02-4
47	Collar	14-02-8
48	Knob	1-47-8
49	Finish Plate	23-33-135
50	Name Plate	23-33-96
51	Knob	23-67-194
52	Knob	8-53-296
52	Nut	8-53-271
53	Nut	
54	Dial	14-02-30
55	Finish Plate	23-33-135
56	Switch	1-47-7
57	Name Plate	23-33-96
58	Seal	
59	Retainer	
60	Nut	23-21-15
61	Washer	23-21-15
62	Switch	23-67-160
63	Switch	8-53-270
64	Control with Mirror	23-21-15
65	Finish Plate	23-33-135
66	Grommet	14-02-24
67	Switch	1-48-770
68	Nut	8-37-459
69	Cable	8-37-458
70	Cable	15-14-1
71	Knob	1-87-180
72	Bezel	
73	Control	1-87-58
74	Spot Cooler	24-28-387
75	Spacer	24-28-389
76	Connector	24-28-73
77	Pad	23-84-3
78	Extension	23-33-109
79	Cover	23-33-147
80	Pad	23-84-3
81	Housing	19-14-25
82	Housing	8-37-178
83	Bracket	23-07-169
84	Housing	19-14-25
85	Brace	23-33-10
86	Clip	
87	Switch	
88	Arm & Plate	1-48-940
89	Brace	23-33-10
90	Knob	8-20-8

PARTS INDICATED BY NAME ONLY - ORDER BY DESCRIPTION

MyMopar.com

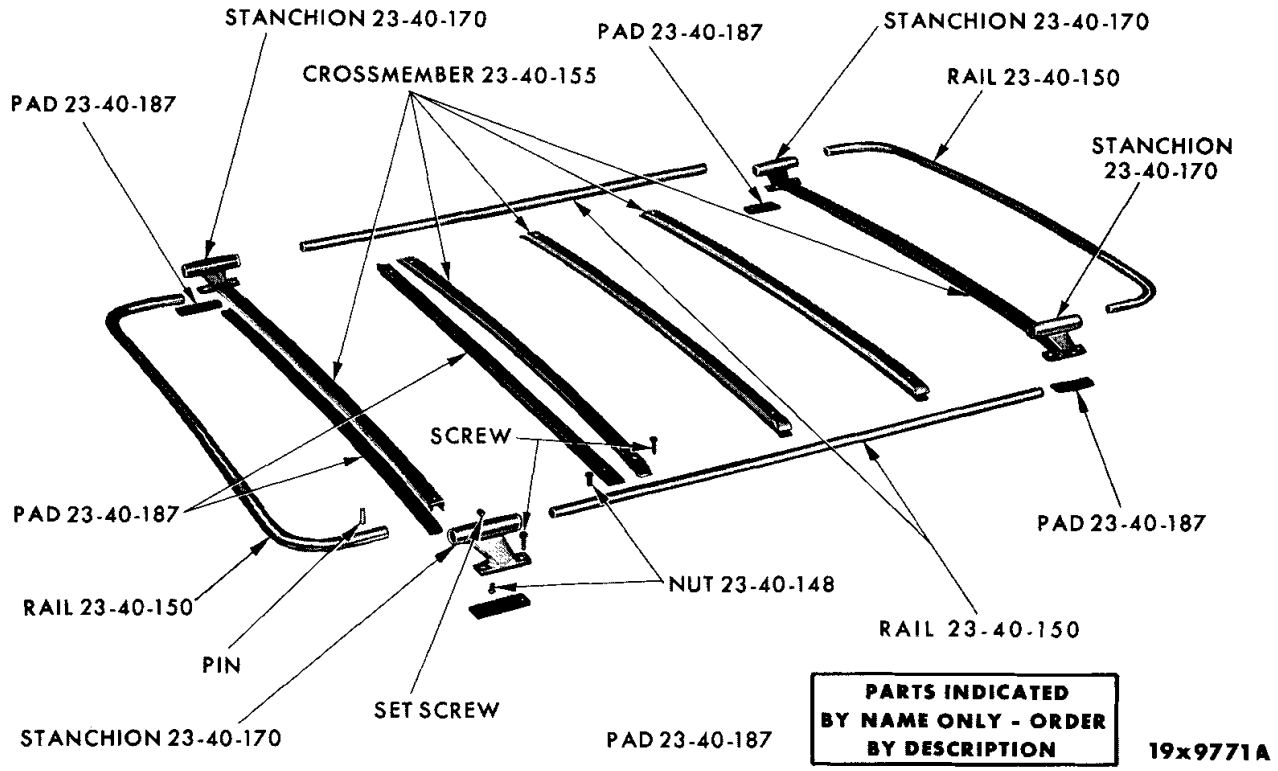

ROOF LUGGAGE RACK - VALIANT, DART, BELVEDERE AND CORONET

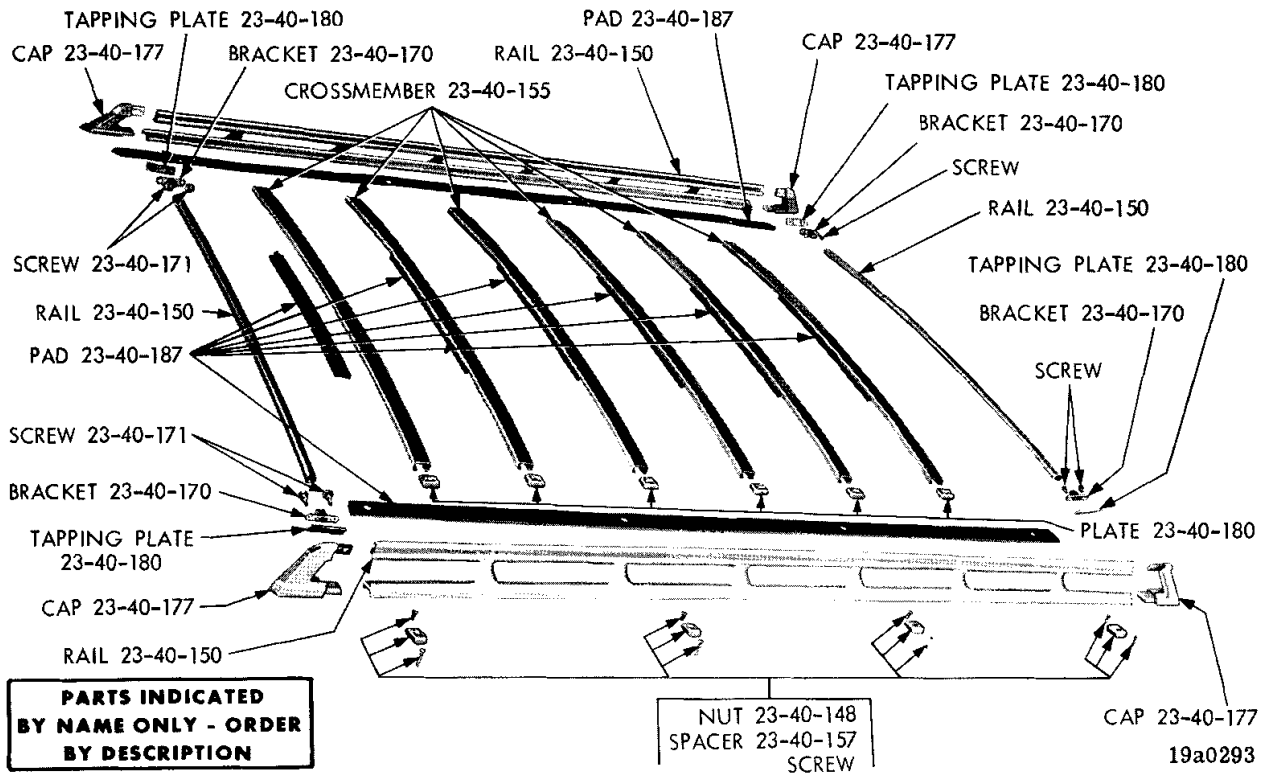

ROOF LUGGAGE RACK - PLYMOUTH, DODGE AND CHRYSLER (FACTORY INSTALLED)

MyMopar.com

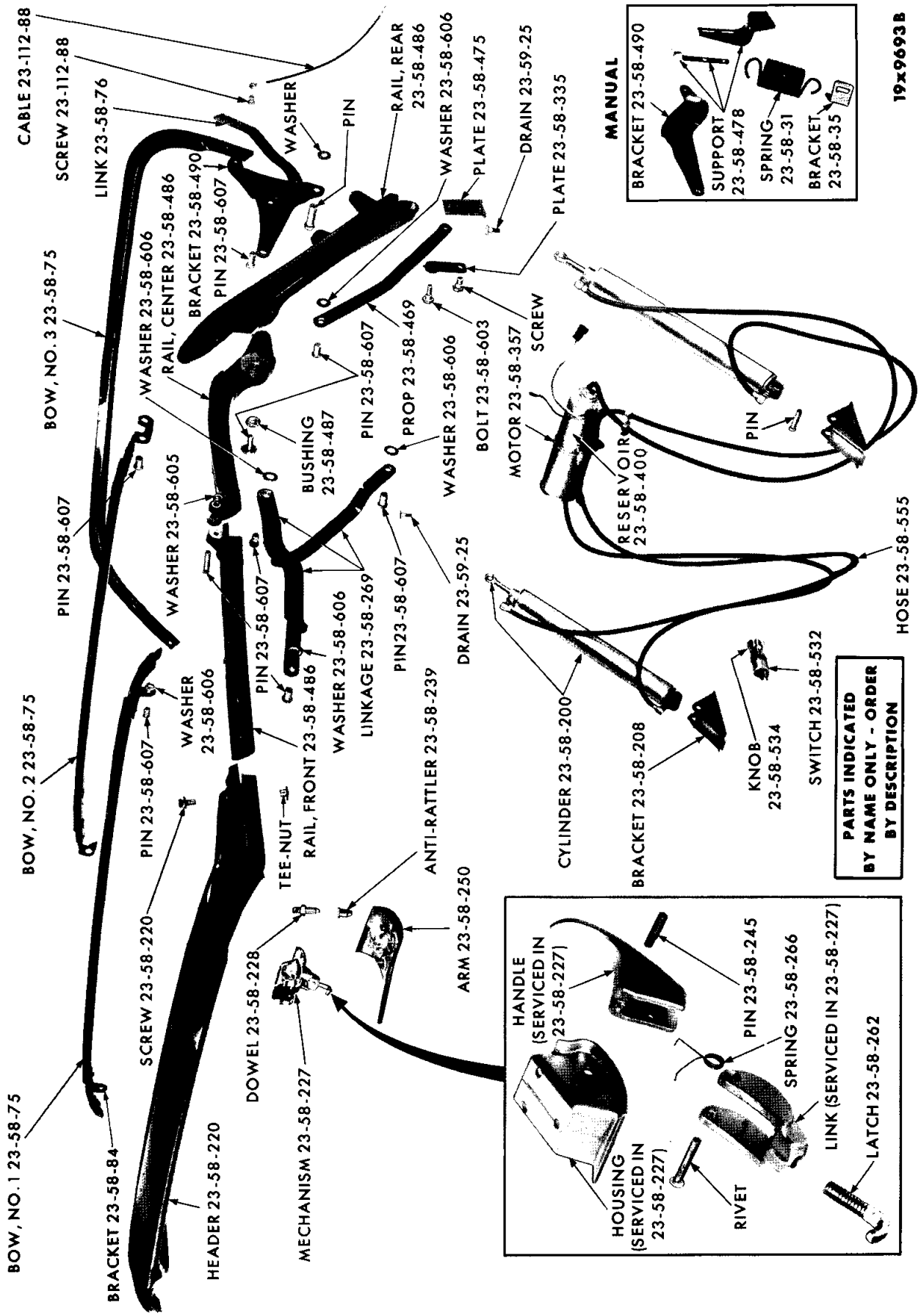

FOLDING TOP - VALIANT AND DART

MyMopar.com

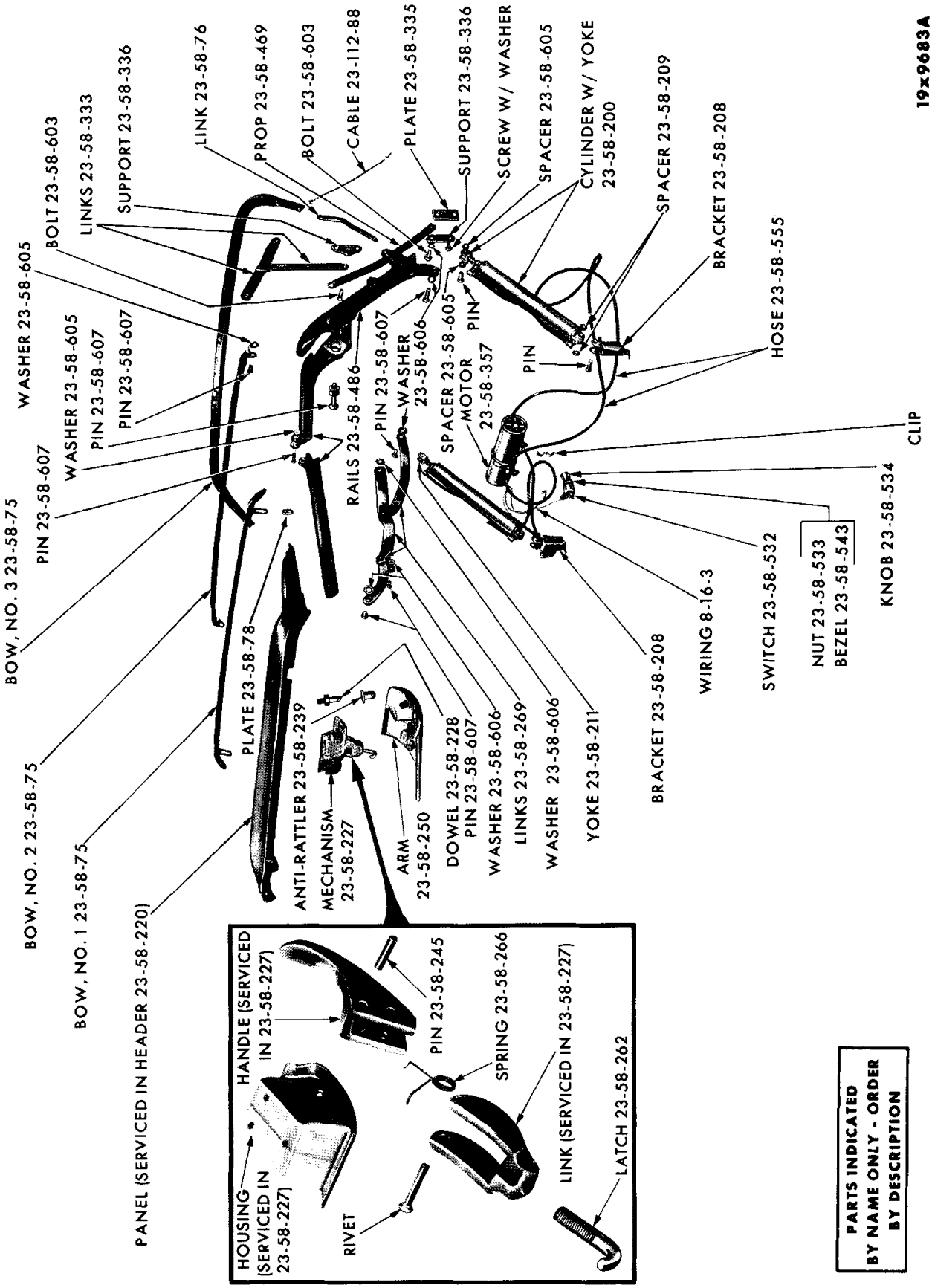

FOLDING TOP - BELVEDERE AND CORONET

MyMopar.com

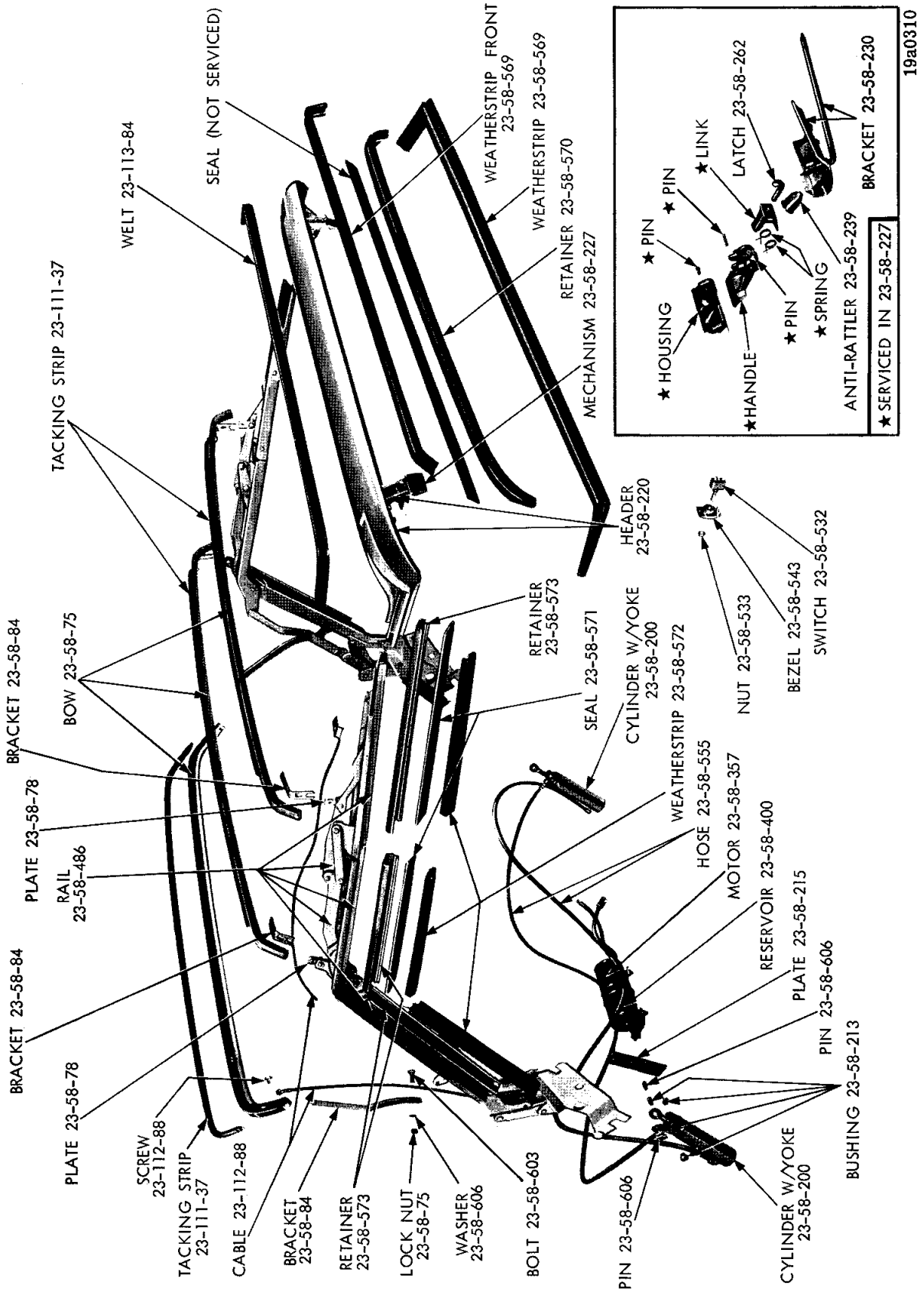

FOLDING TOP - PLYMOUTH, DODGE AND CHRYSLER

MyMopar.com

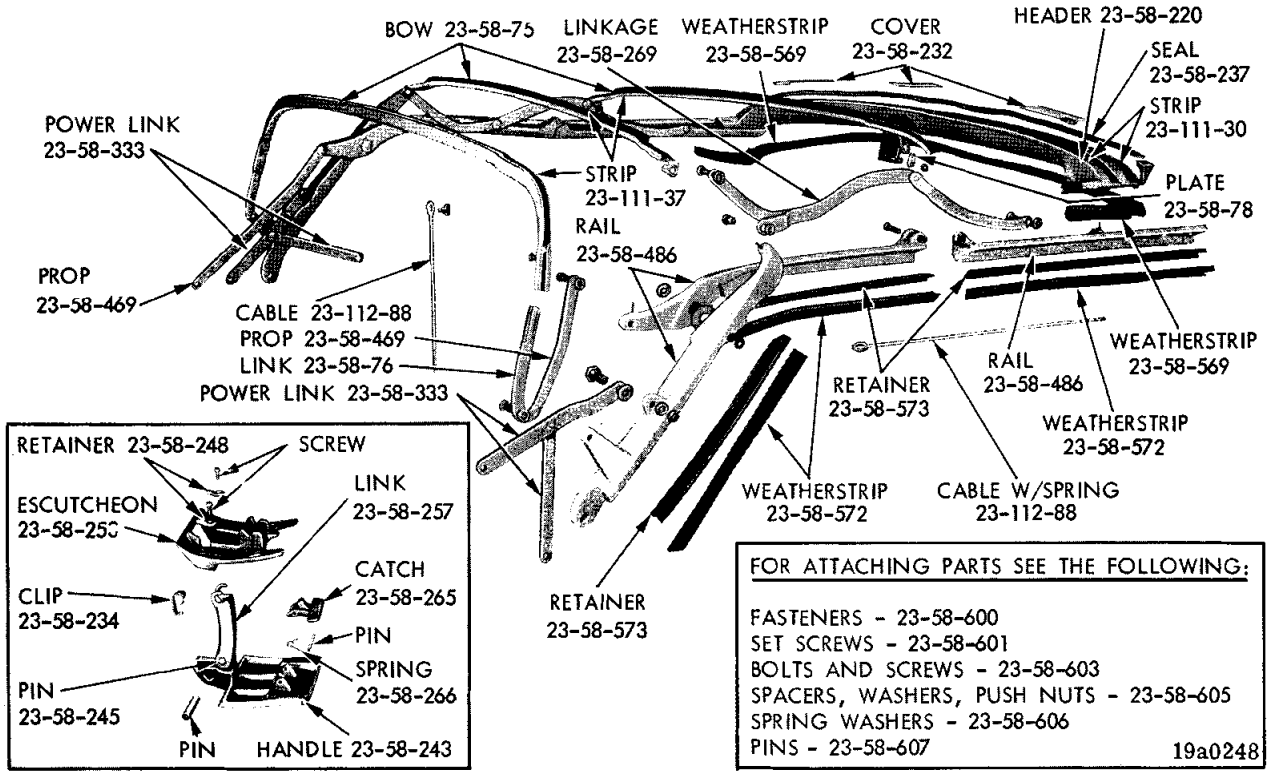

FOLDING TOP - IMPERIAL

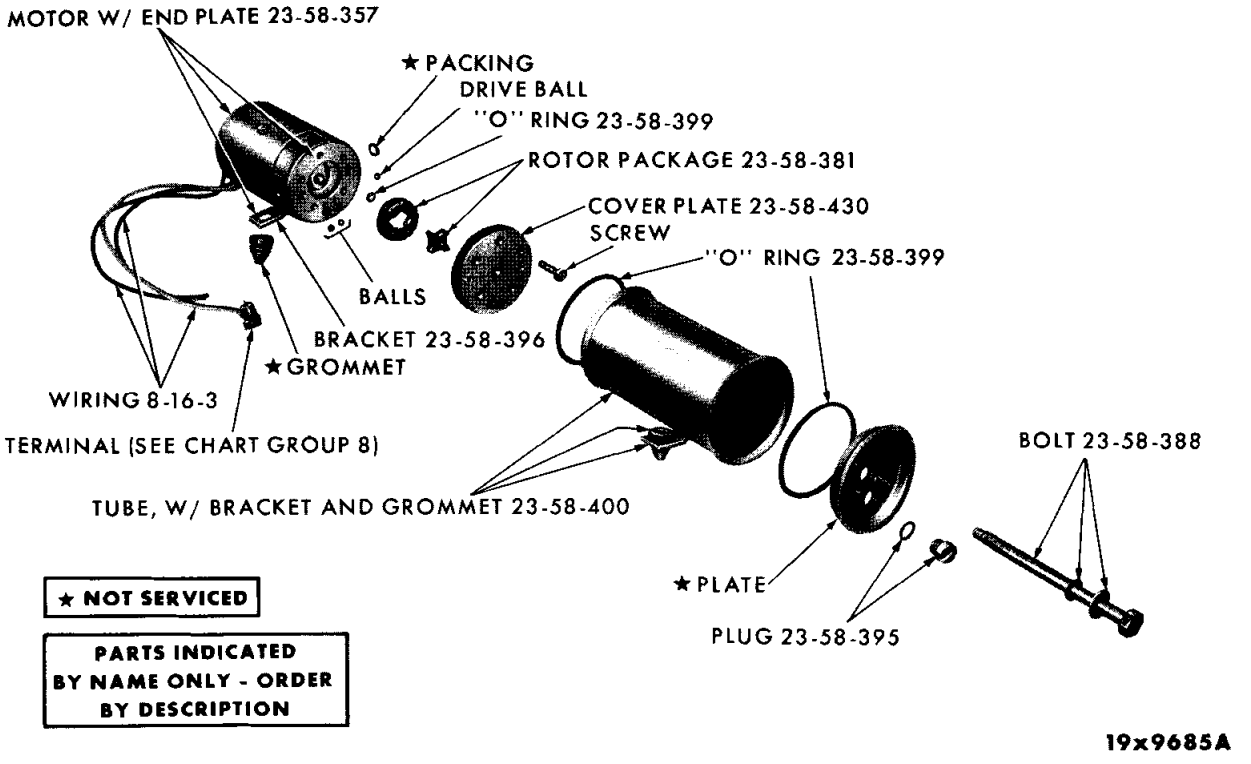

FOLDING TOP MOTOR

MyMopar.com

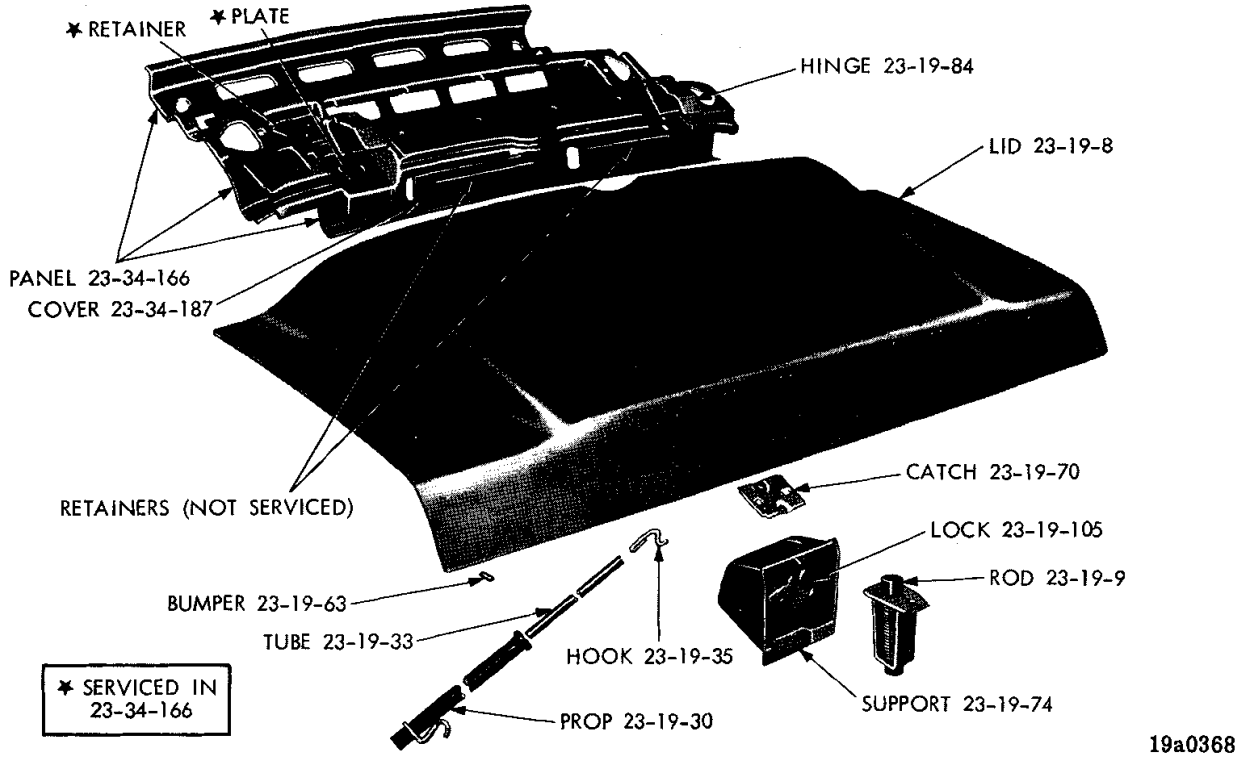

DECK LID, HINGES AND LOCKS - VALIANT BARRACUDA

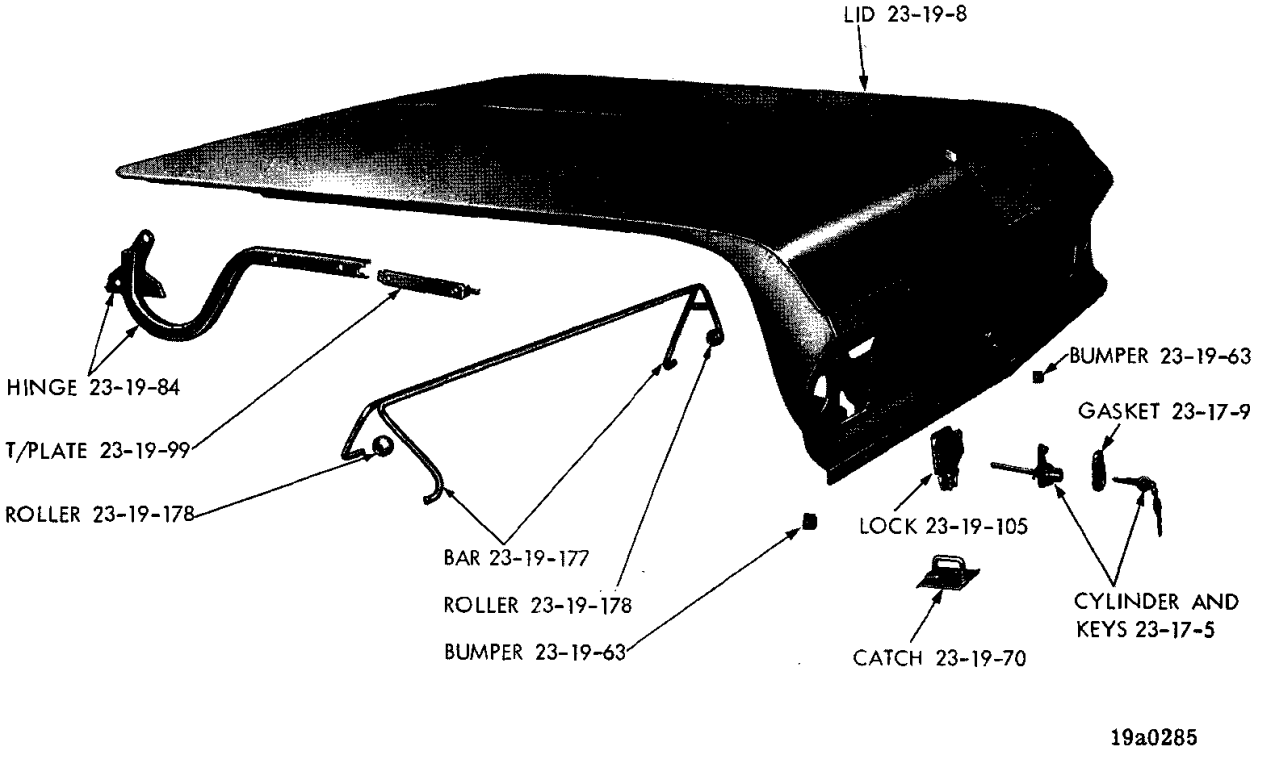

DECK LID - PLYMOUTH

MyMopar.com

PARTS INDICATED BY NAME ONLY - ORDER BY DESCRIPTION

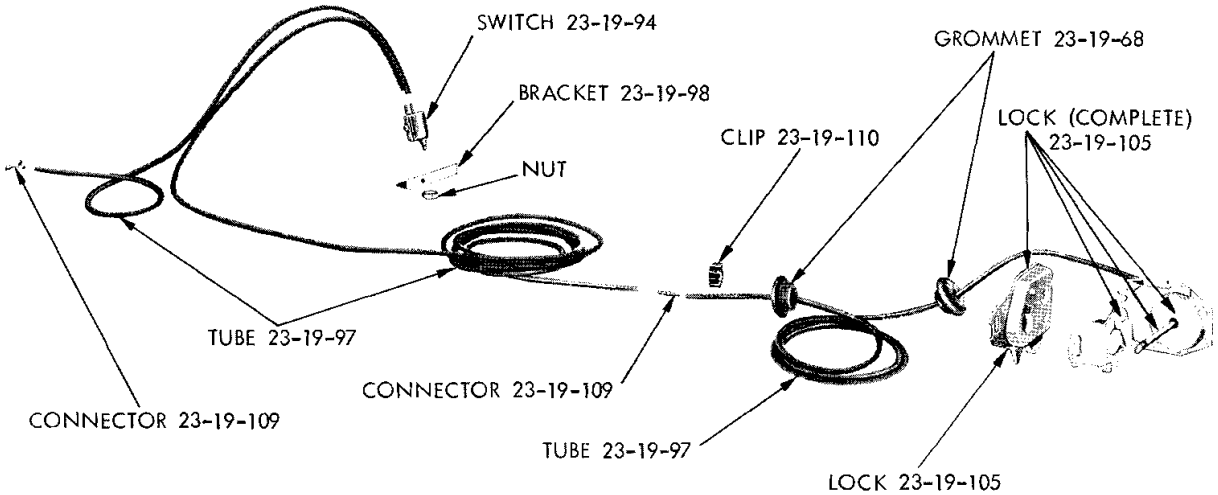

VACUUM DECK LID LOCK - DODGE AND CHRYSLER

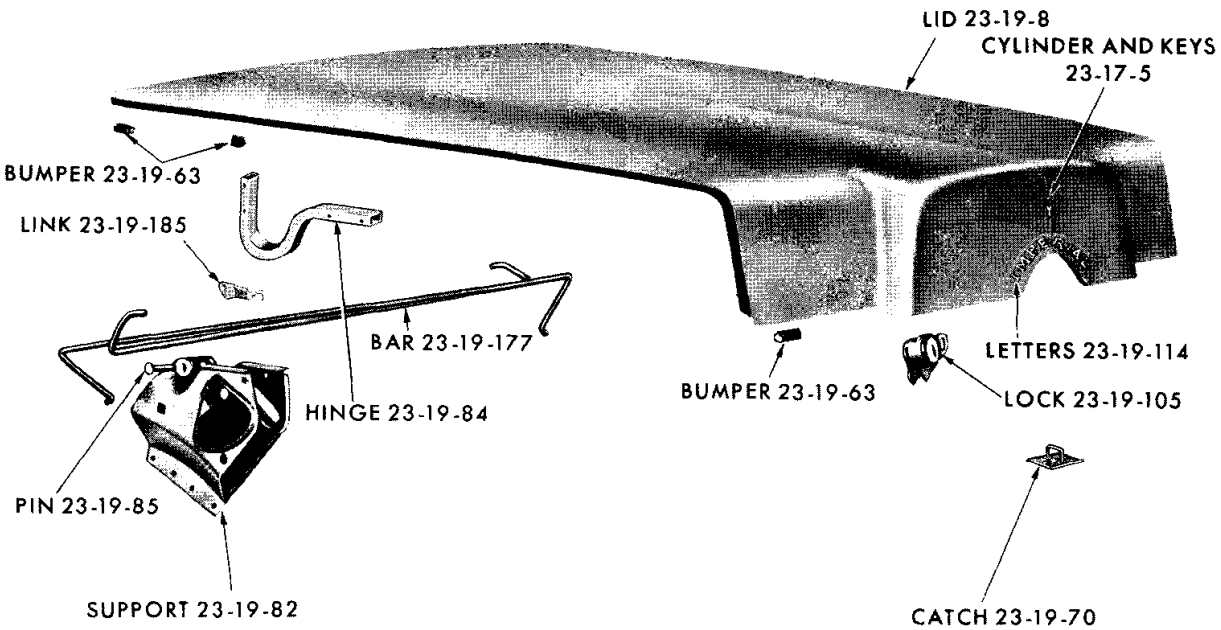

DECK LID AND HINGES - IMPERIAL

MyMopar.com

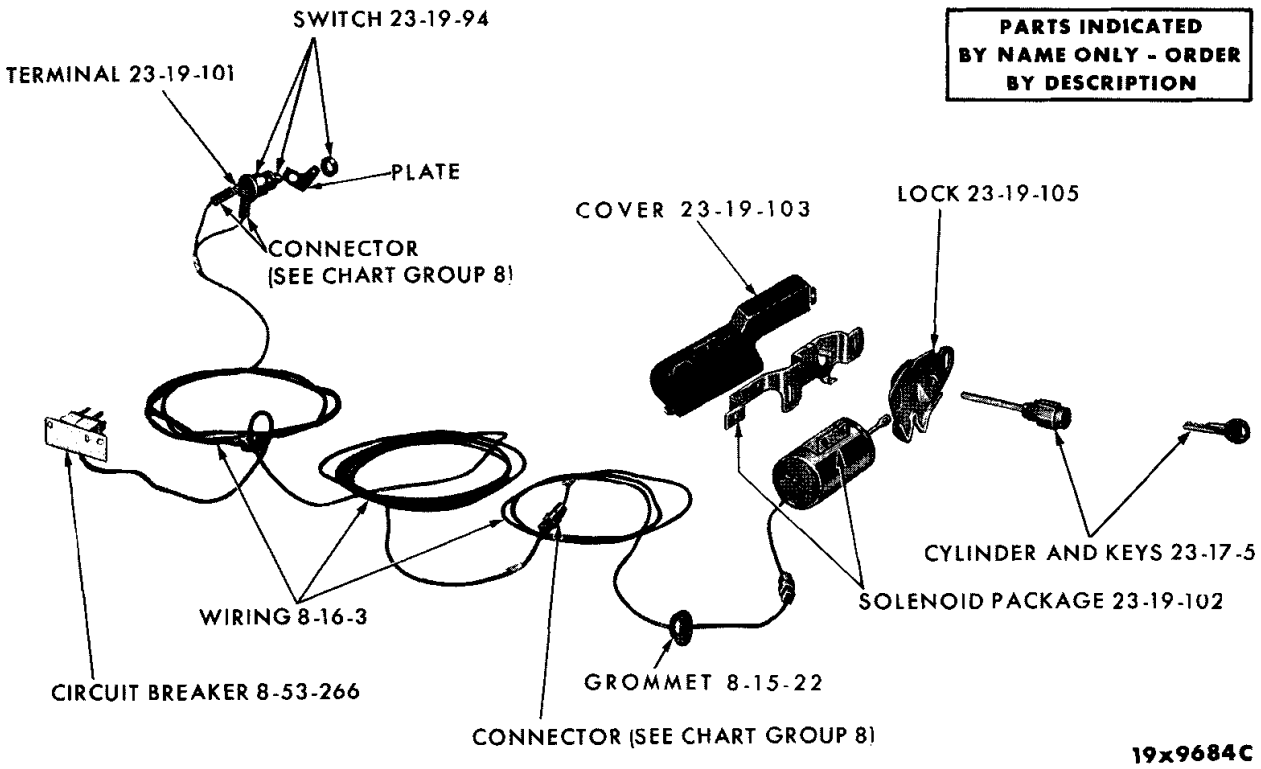

ELECTRIC DECK LID LOCK - IMPERIAL

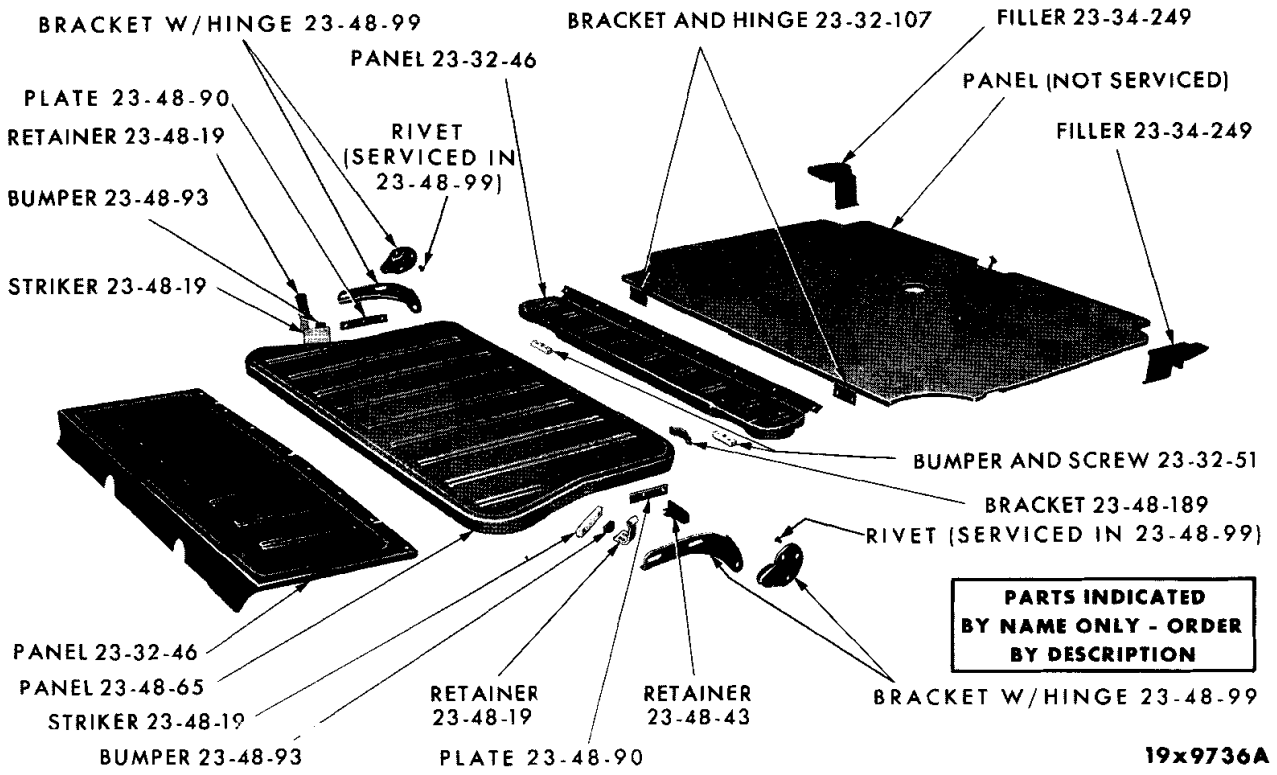

STATION WAGON FLOOR PANELS - VALIANT, DART, BELVEDERE AND CORONET (2 SEATER)

MyMopar.com

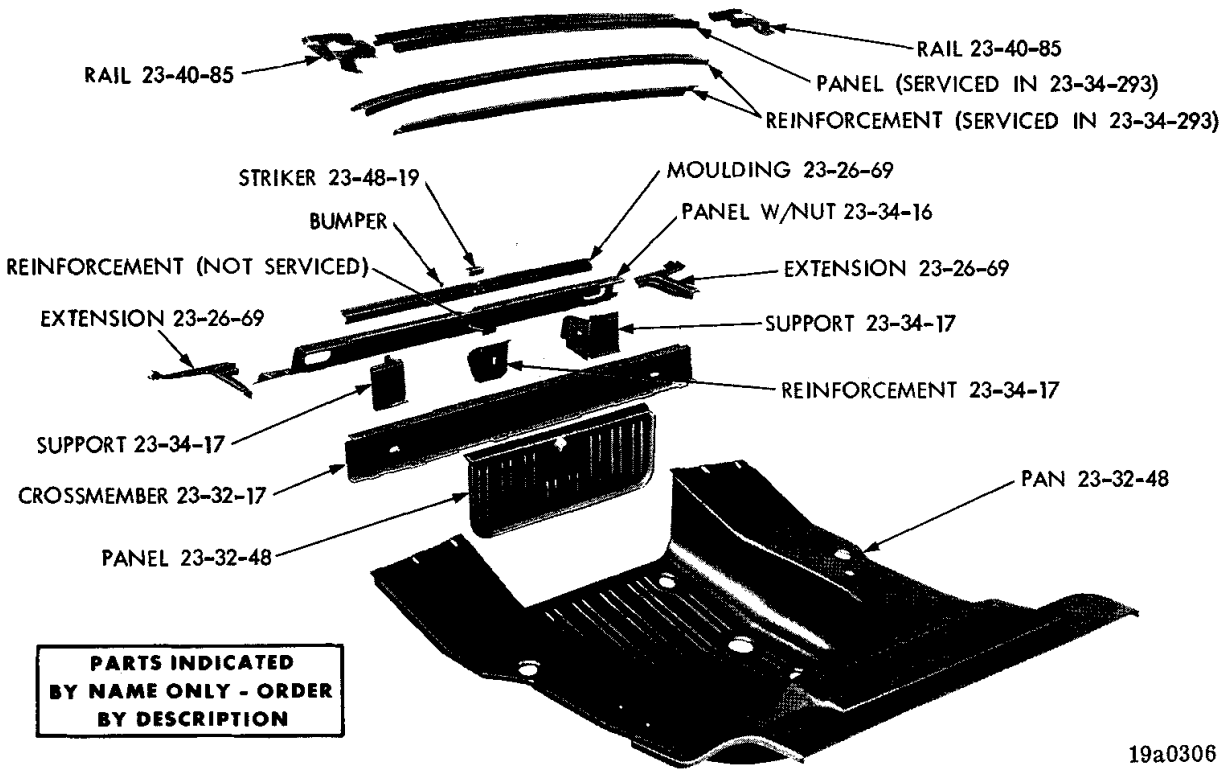

REAR FLOOR PAN - PLYMOUTH, DODGE AND CHRYSLER STATION WAGONS

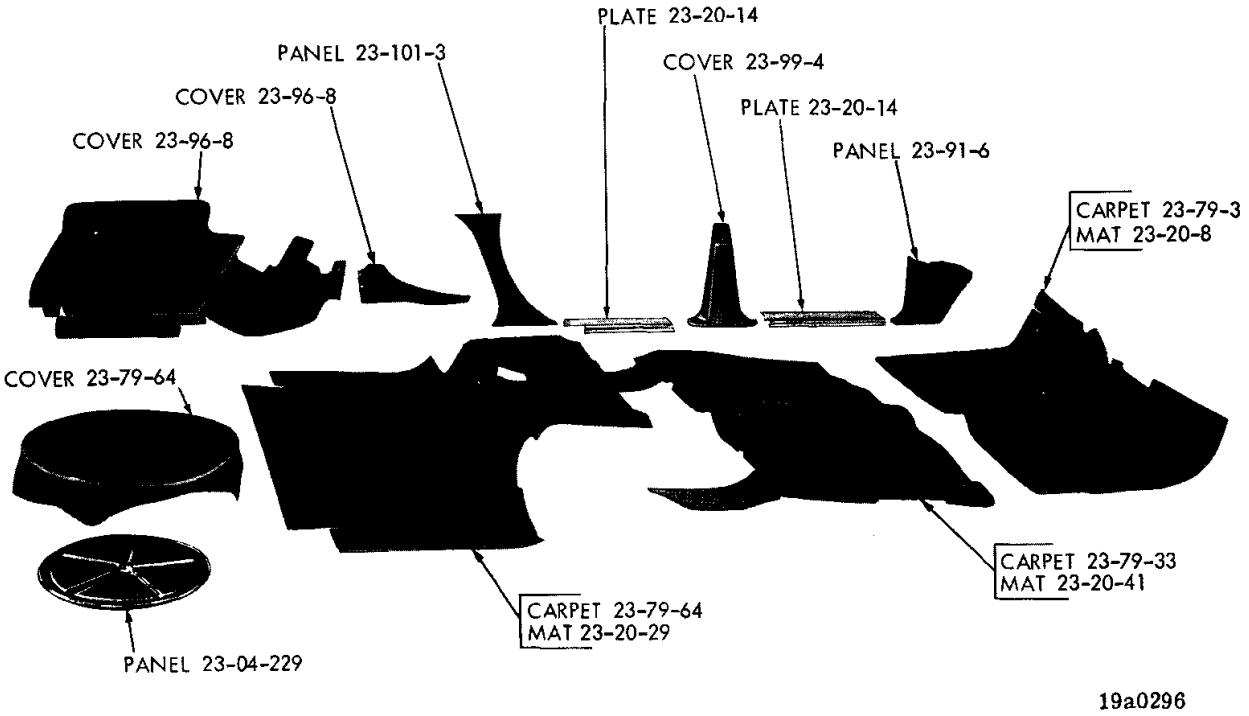

INTERIOR FLOOR MATS AND SCUFF PLATES

MyMopar.com

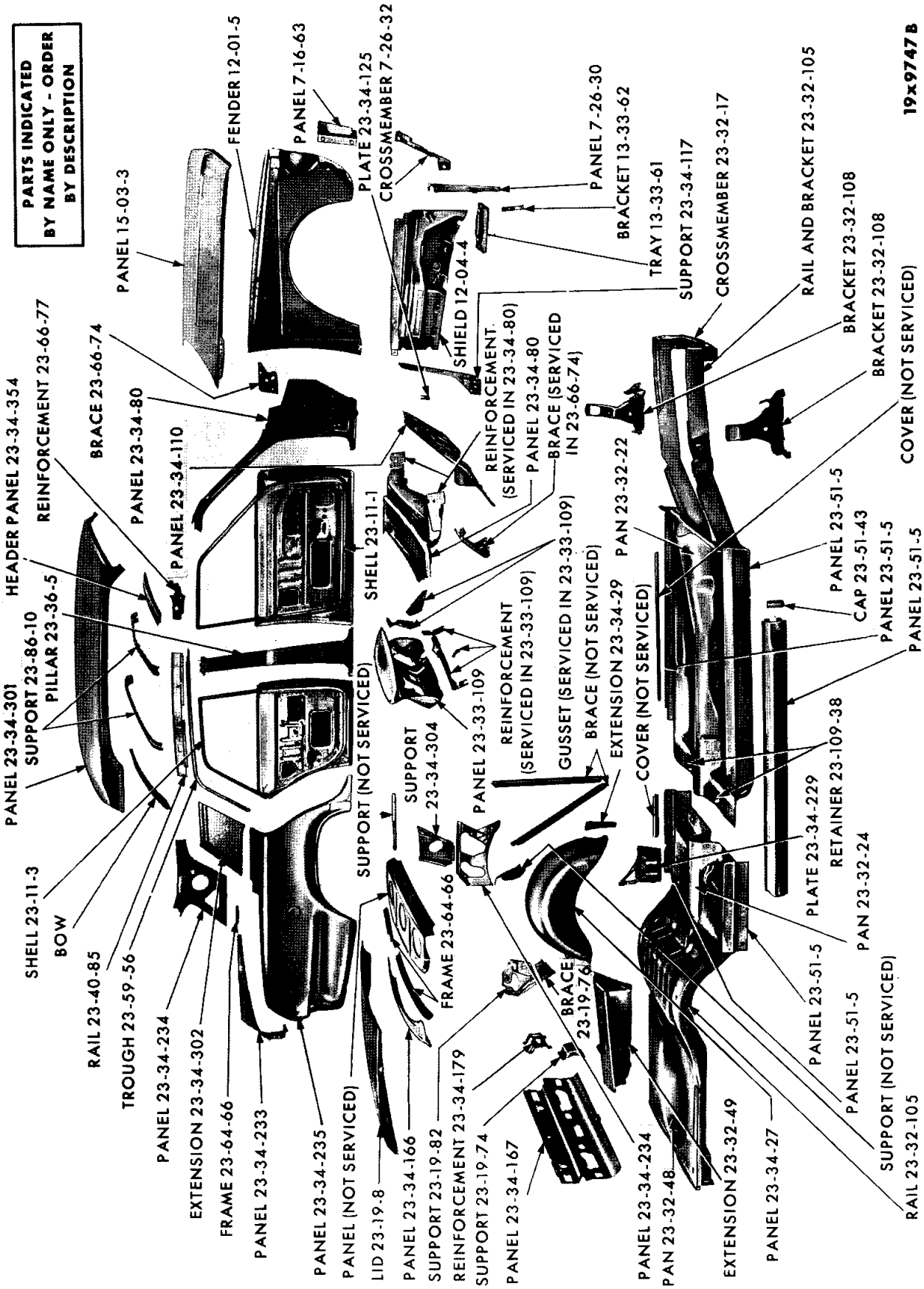

BODY - VALIANT 4 DOOR SEDAN

MyMopar.com

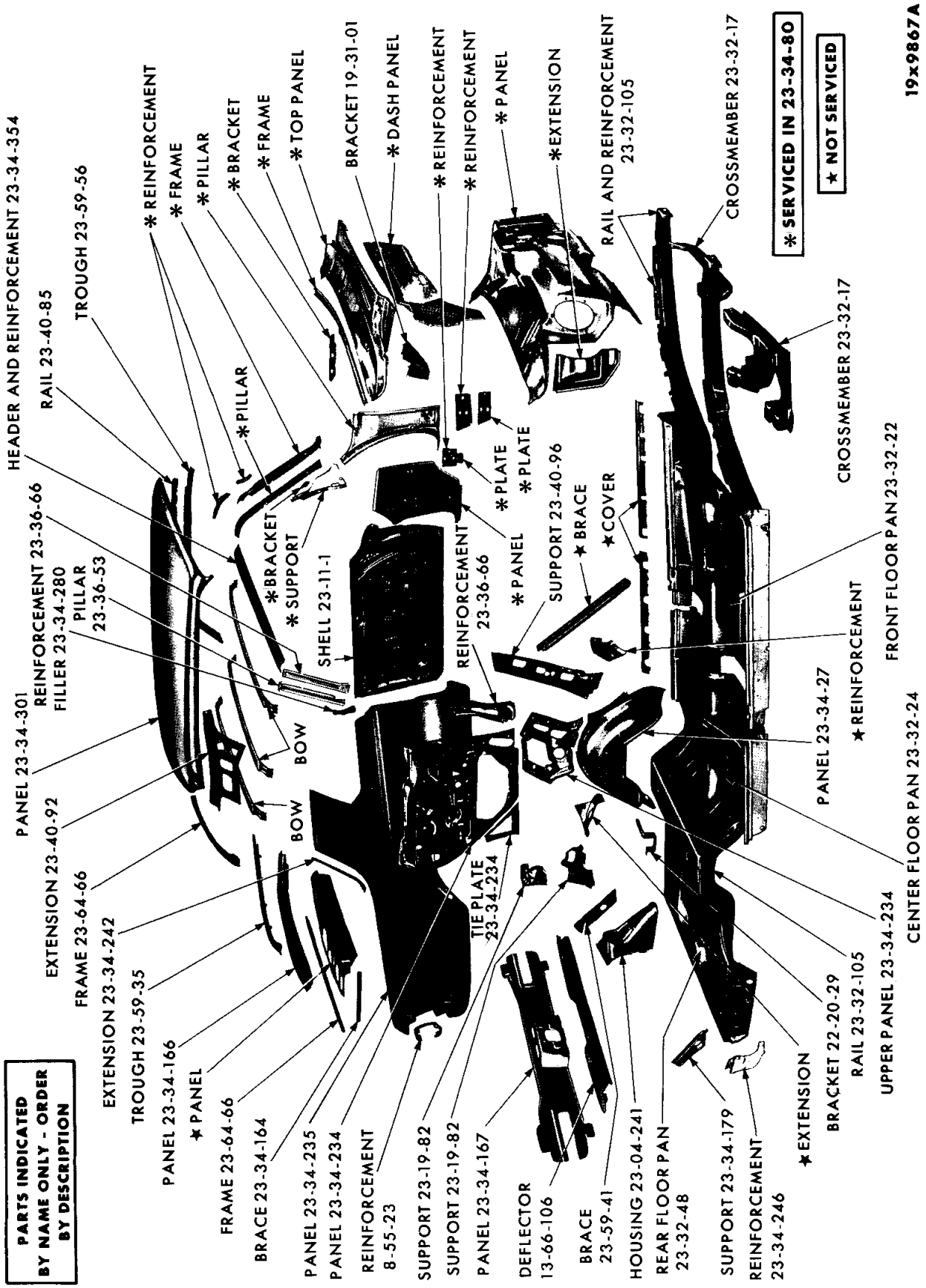

BODY - BELVEDERE 2 DOOR SEDAN

MyMopar.com

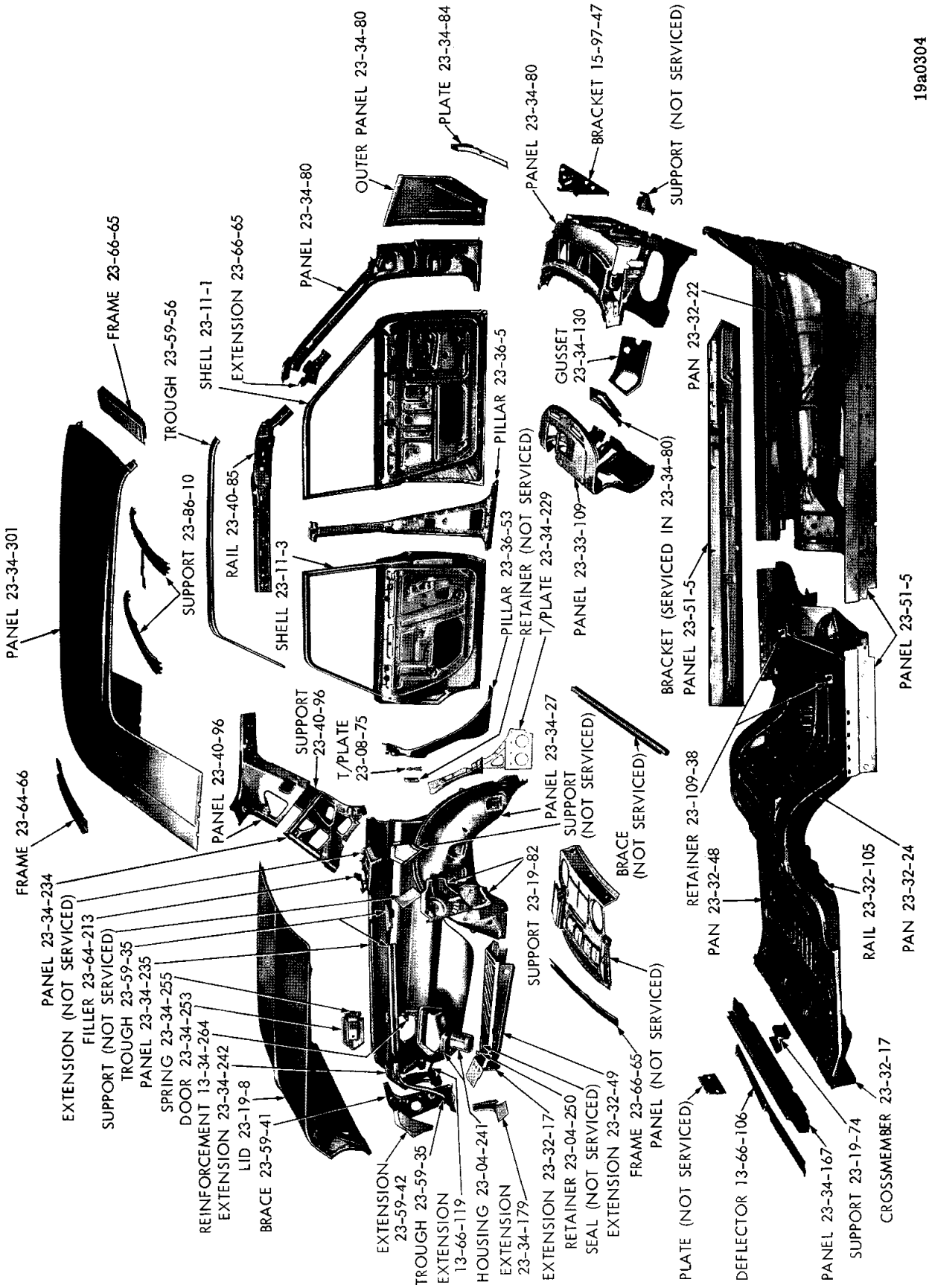

BODY - PLYMOUTH 4 DOOR SEDAN

MyMopar.com

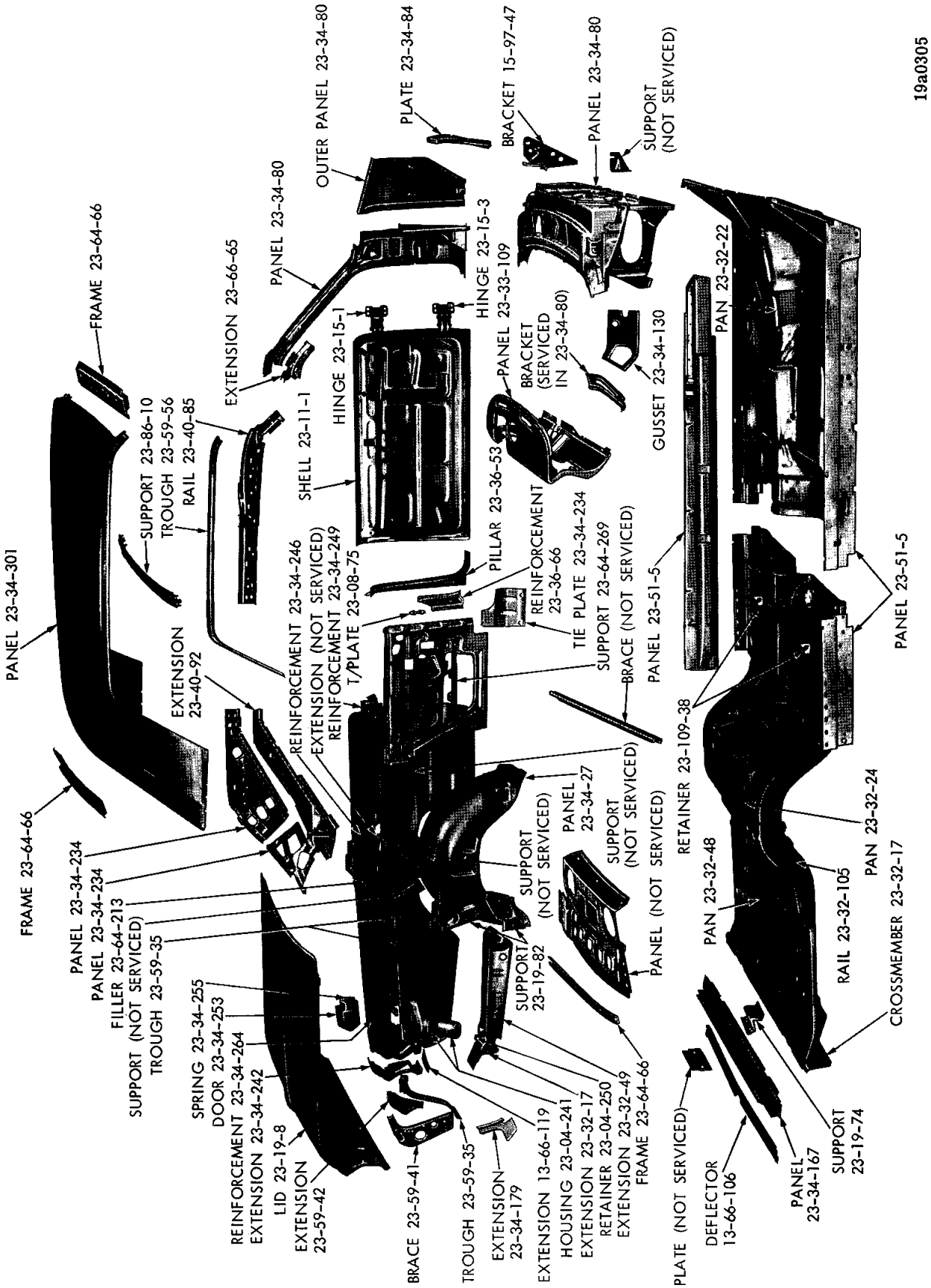

BODY - PLYMOUTH 2 DOOR HARDTOP

MyMopar.com

NOTES

MyMopar.com

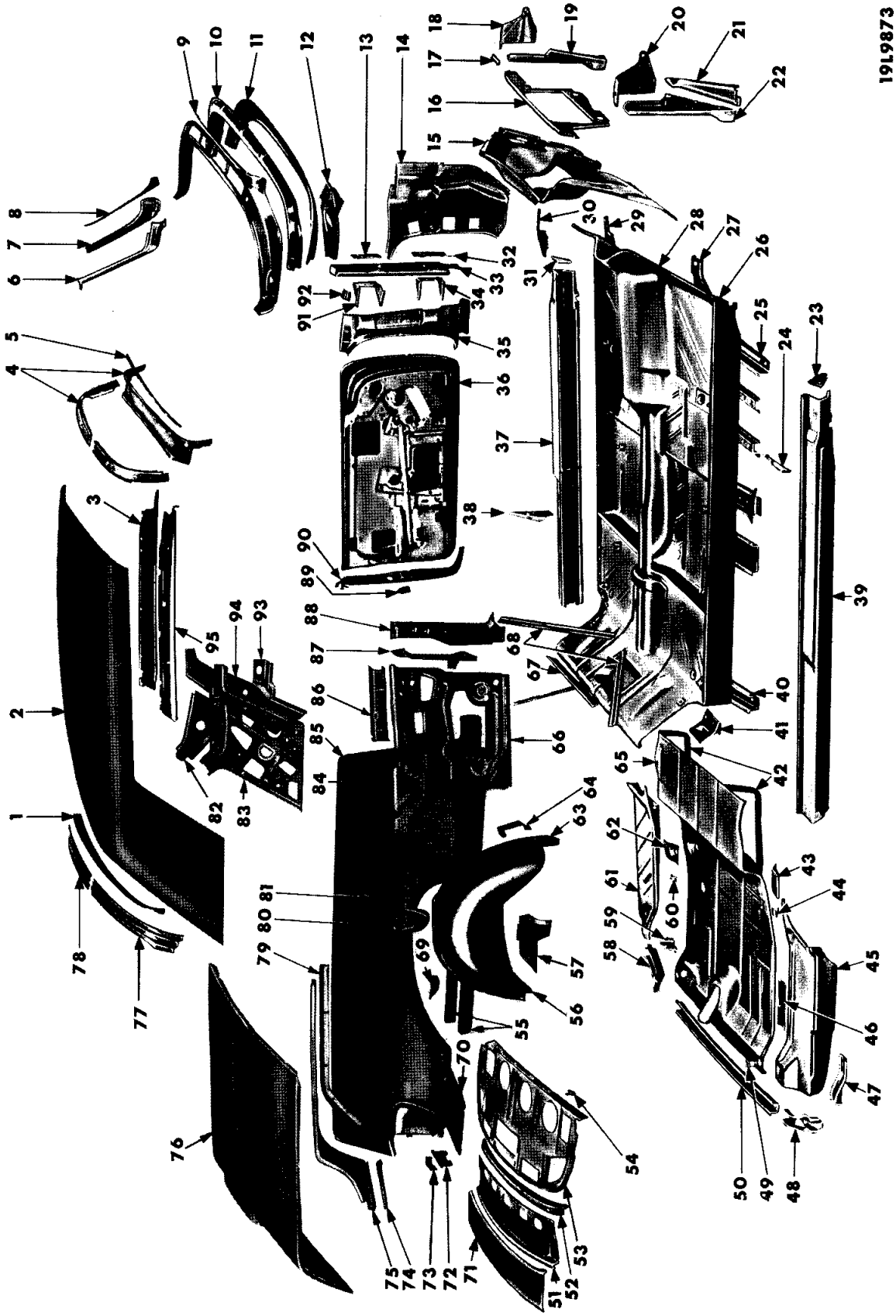

BODY - IMPERIAL 2 DOOR HARDTOP

MyMopar.com

BODY - IMPERIAL 2 DOOR HARDTOP

Ref. No.	Name	Part Type Code
1	Rear Window Opening Upper Frame.	23-64-66
2	Roof Panel	23-34-301
3	Roof Side Rail	23-40-85
4	Windshield Opening Upper Frame (Serviced in 23-34-80)	
5	Windshield Header Trim Retainer (Serviced in 23-34-80)	
6	Front Hinge Pillar Extension (Serviced in 23-34-80)	
7	Windshield Opening Side Frame (Serviced in 23-34-80)	
8	Cowl Top Panel Extension (Serviced in 23-34-80)	
9	Cowl Top Panel (Serviced in 23-34-80)	
10	Windshield Opening Lower Frame (Serviced in 23-34-80)	
11	Windshield Opening Lower Frame Reinforcement (Serviced in 23-34-80)	
12	Front Pillar to Cowl Side Filler (Serviced in 23-34-80)	
13	Front Pillar Door Tapping Plate	23-15-13
14	Cowl Side Panel	23-34-80
15	Dash Panel	23-34-110
16	Dash Panel Air Duct Cover	23-34-116
17	Cowl Top Panel Hood Seal Support (Serviced in 23-34-80)	
18	Hood Hinge Support and Clinch Nut (Serviced in 23-34-80)	
19	Dash Panel No. 1 and 1A Body Bolt Brace and C/Nut	23-34-122
20	Hood Hinge Support and Clinch Nut (Serviced in 23-34-80)	
21	Dash Panel No. 1 and 1A Body Bolt Brace and C/Nut Reinforcement	23-34-126
22	Dash Panel No. 1 and 1A Body Bolt Brace and C/Nut	23-34-122
23	Body Side Sill Front End Cover	23-51-43
24	Body Floor Seat Track Reinforcement	Not Serviced
25	Floor Pan Reinforcement	Not Serviced
26	Body Side Inner Sill	23-51-5
27	No. 1 and 2 Body Bolt Strainer	Not Serviced
28	Front Floor Pan	Not Serviced
29	No. 1 and No. 2 Body Bolt Strainer	Not Serviced
30	Dash Panel Hood Hinge Support to Front Cowl Filler Reinforcement	Not Serviced
31	Body Side Sill End Cover	23-51-43
32	Front Pillar Door Hinge Tapping Plate	23-15-13
33	Front Pillar Front Half (Serviced in 23-34-80)	
34	Front Pillar Lower Hinge Reinforcement (Serviced in 23-34-80)	
35	Front Pillar Rear Half (Serviced in 23-34-80)	
36	Door Shell	23-11-1
37	Body Side Sill Outer Panel	23-51-5
38	Quarter Inside Panel to Seat Riser Brace	Not Serviced
39	Body Side Outer Sill	23-51-5
40	Body Floor Pan Reinforcement	Not Serviced
41	Axle Drive Pinion Carrier Bumper Reinforcement	Not Serviced
42	Fuel Tank Rear Floor Pan Reinforcement	Not Serviced
43	No. 5 Body Bolt Reinforcement	Not Serviced
44	Fuel Tank Hanger	Not Serviced
45	Rear Floor Pan Side Extension	23-32-49
46	Floor Pan Spare Wheel Bracket Reinforcement	Not Serviced
47	Fuel Tank Rear Floor Pan Reinforcement Extension	Not Serviced
48	No. 6 Body Bolt Floor Pan Reinforcement Extension	Not Serviced
49	No. 6 Body Bolt Reinforcement to Floor Pan Spacer	23-05-36
50	No. 6 Body Bolt Floor Pan Reinforcement	Not Serviced
51	Deck Opening Upper Panel Reinforcement (Serviced in 23-34-166)	
52	Belt Center Bar (Serviced in 23-34-166)	
53	Shelf Panel	Not Serviced
54	Rear Seat Back Hanger	Not Serviced
55	Strainer	23-34-280
56	Panel	23-34-27
57	Extension	Not Serviced
58	No. 6 Body Bolt Floor Pan Reinforcement	Not Serviced
59	Rear Floor Pan Jack Stowage Bracket	Not Serviced
60	Spare Wheel Anchor Stud Bracket	Not Serviced
61	Extension	23-32-49
62	No. 5 Body Bolt Floor Pan Reinforcement	Not Serviced
63	Panel	23-34-27
64	Bracket	23-34-346
65	Rear Floor Pan	23-32-48
66	Quarter Inner Panel	23-34-234
67	Shelf Panel to Floor Center Brace Support	Not Serviced
68	Shelf Panel to Floor Pan Brace	Not Serviced
69	Reinforcement	23-34-249
70	Panel	23-34-233
71	Deck Opening Upper Panel	23-34-166
72	Bracket	Not Serviced
73	Bracket and W/Nut	Not Serviced
74	Extension	23-34-176
75	Panel	23-34-233
76	Deck Lid	23-19-8
77	Rear Window Upper Frame Reinforcement Right	23-64-67
78	Rear Window Upper Frame Reinforcement Left	23-64-67
79	Reinforcement	23-59-37
80	Support	23-19-82
81	Anti-Rattler	Not Serviced
82	Reinforcement	23-64-67
83	Panel	23-34-234
84	Panel	23-34-234
85	Quarter Panel	23-34-235
86	Support	23-41-8
87	Reinforcement	23-36-66
88	Extension	23-34-236
89	Door Lock Striker Tapping Plate	23-08-75
90	Body Lock Pillar	23-36-53
91	Front Pillar Upper Hinge Reinforcement (Serviced in 23-34-80)	
92	Windshield Opening Lower Frame to Upper Strg. Col. Bracket (Serviced in 23-34-80)	
93	Extension	23-34-236
94	Frame	23-64-66
95	Roof Side Rail	23-40-85

MyMopar.com

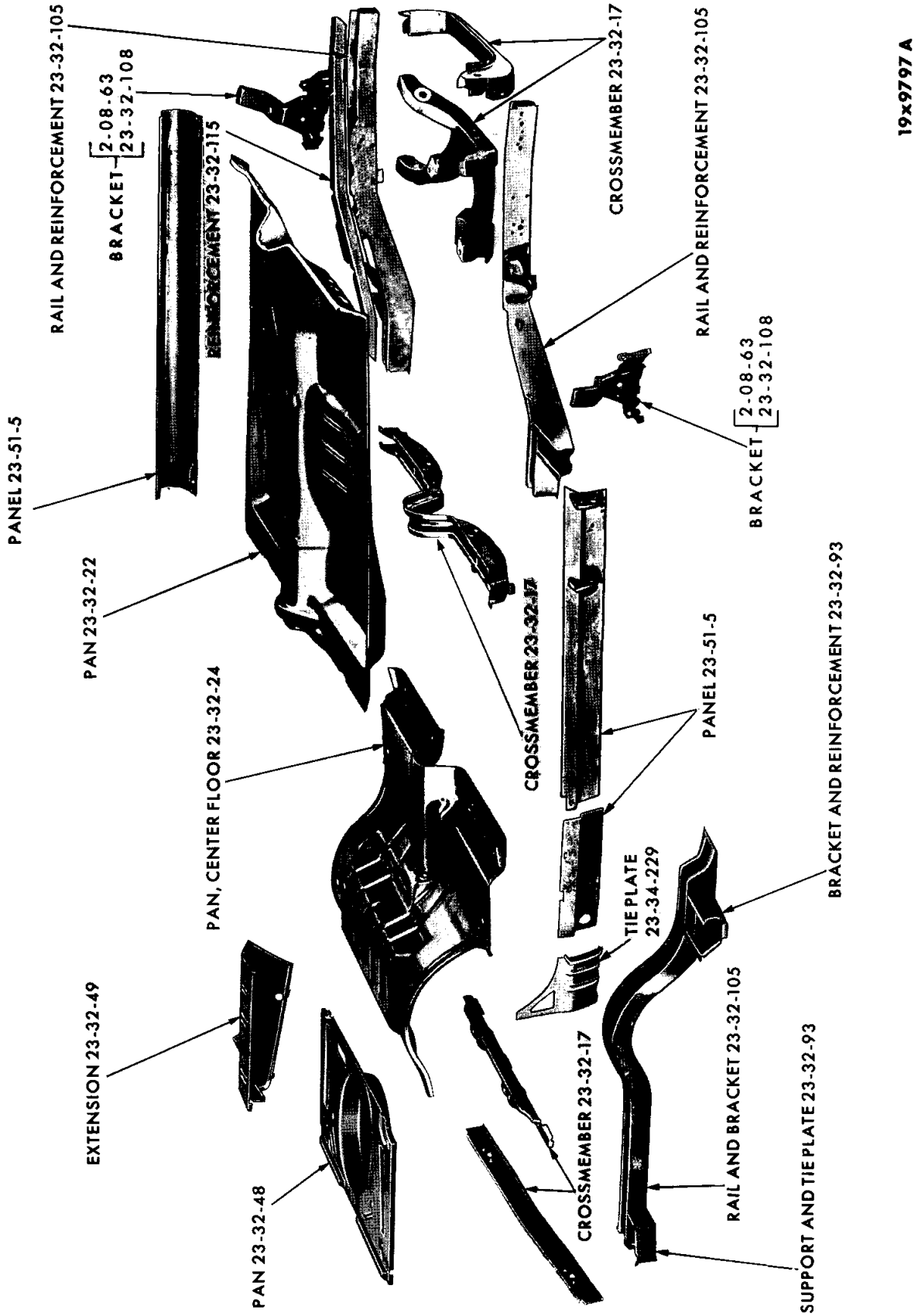

UNDERBODY - VALIANT AND DART

MyMopar.com

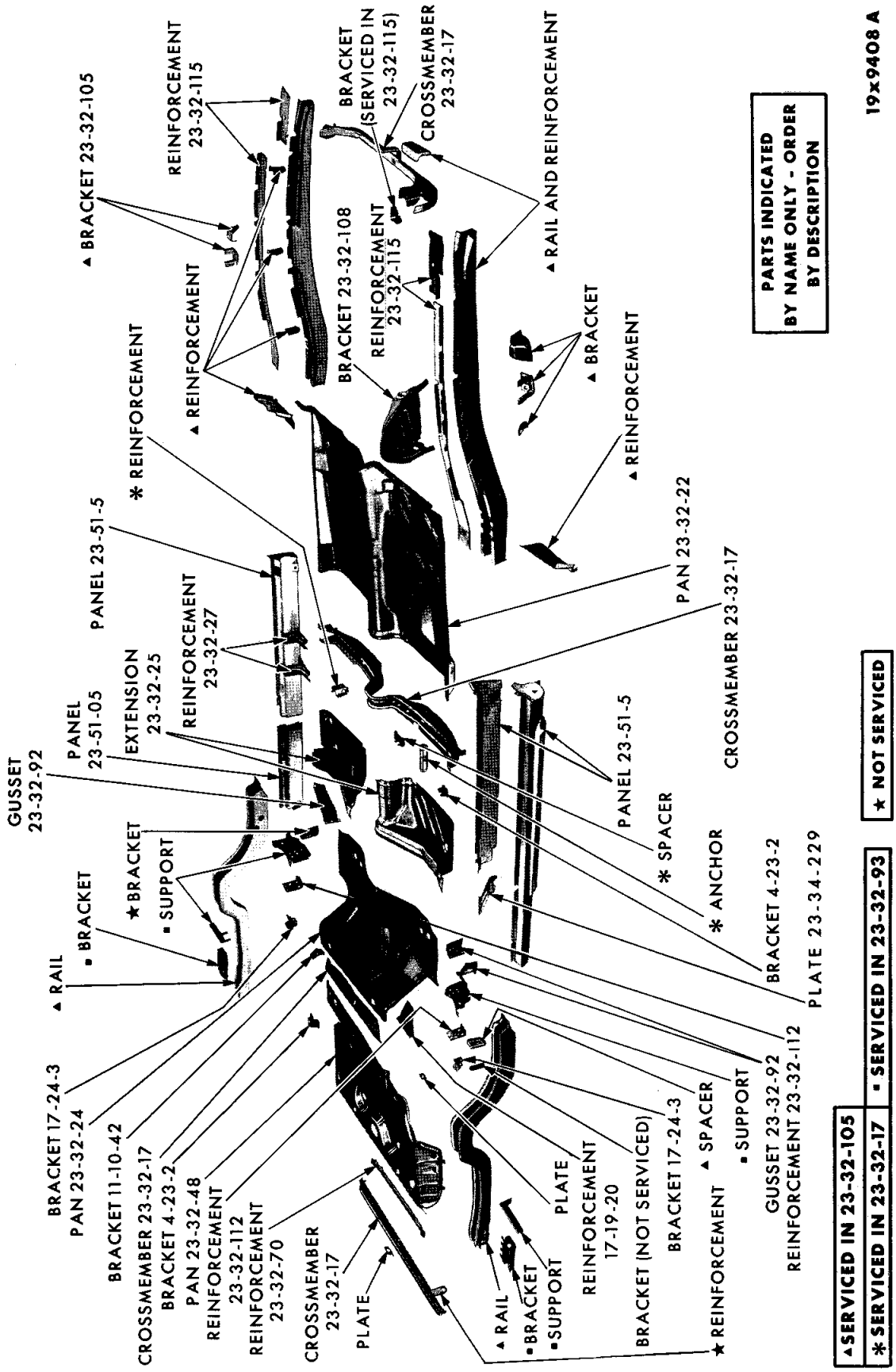
▲ BRACKET 23-32-105
REINFORCEMENT 23-32-115
BRACKET (SERVICED IN 23-32-115)
CROSSMEMBER 23-32-17
▲ RAIL AND REINFORCEMENT
▲ REINFORCEMENT
BRACKET 23-32-108
REINFORCEMENT 23-32-115
▲ BRACKET
▲ REINFORCEMENT
✱ REINFORCEMENT
PANEL 23-51-5
PAN 23-32-22
REINFORCEMENT 23-32-27
EXTENSION 23-32-25
PANEL 23-51-05
GUSSET 23-32-92
CROSSMEMBER 23-32-17
PANEL 23-51-5
✱ SPACER
✱ ANCHOR
★ BRACKET
▪ SUPPORT
▪ BRACKET
▲ RAIL
BRACKET 4-23-2
PLATE 23-34-229
BRACKET 17-24-3
PAN 23-32-24
BRACKET 11-10-42
CROSSMEMBER 23-32-17
BRACKET 4-23-2
PAN 23-32-48
REINFORCEMENT 23-32-112
REINFORCEMENT 23-32-70
CROSSMEMBER 23-32-17
PLATE
▲ RAIL
▪ BRACKET
▪ SUPPORT
PLATE
REINFORCEMENT 17-19-20
BRACKET (NOT SERVICED)
BRACKET 17-24-3
▲ SPACER
★ REINFORCEMENT
▪ SUPPORT
GUSSET 23-32-92
REINFORCEMENT 23-32-112
PARTS INDICATED BY NAME ONLY - ORDER BY DESCRIPTION
19x9408 A
▲ SERVICED IN 23-32-105
▪ SERVICED IN 23-32-17
✱ SERVICED IN 23-32-93
★ NOT SERVICED
UNDERBODY - BELVEDERE AND CORONET

MyMopar.com

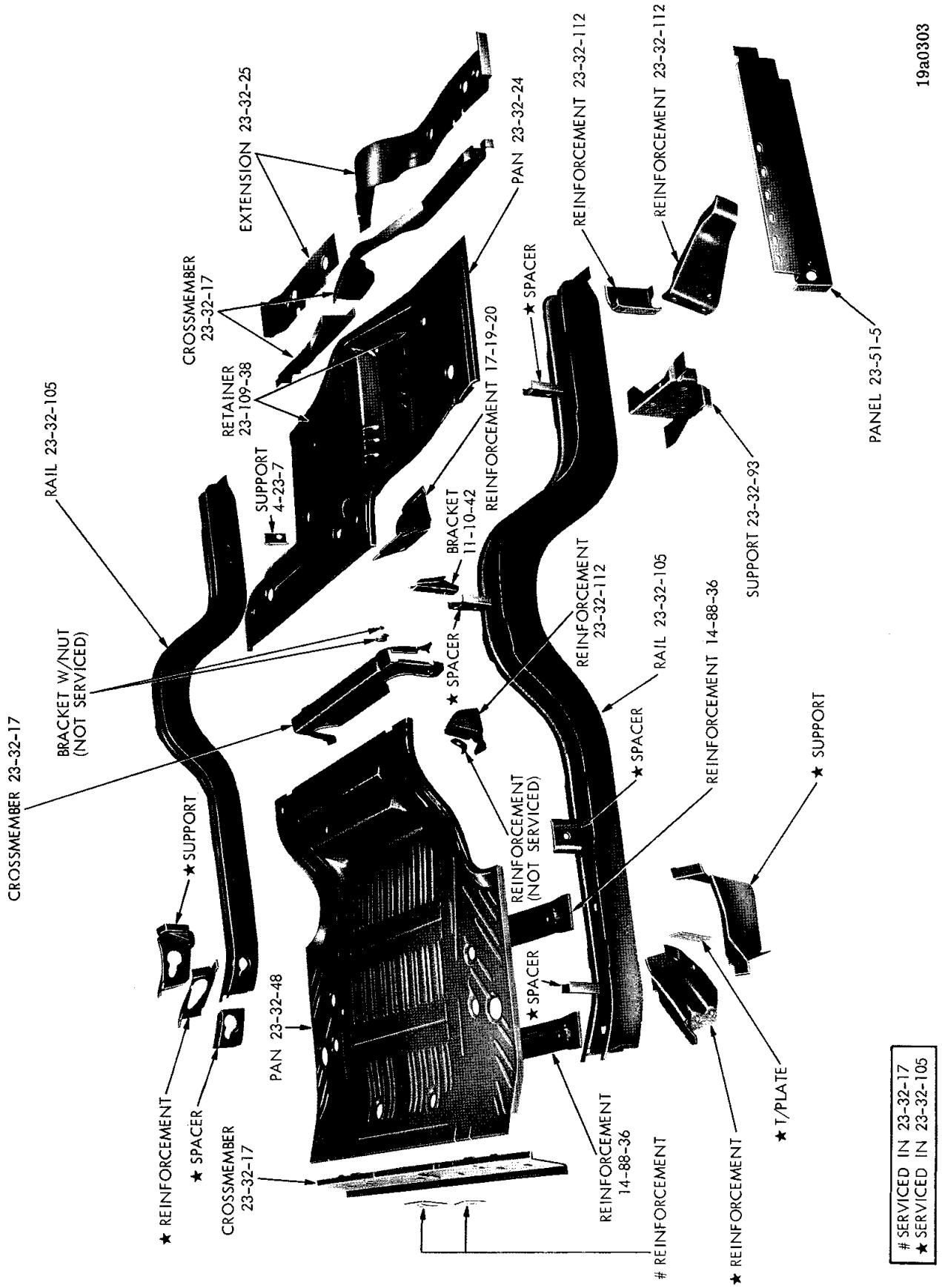

UNDERBODY - PLYMOUTH

MyMopar.com

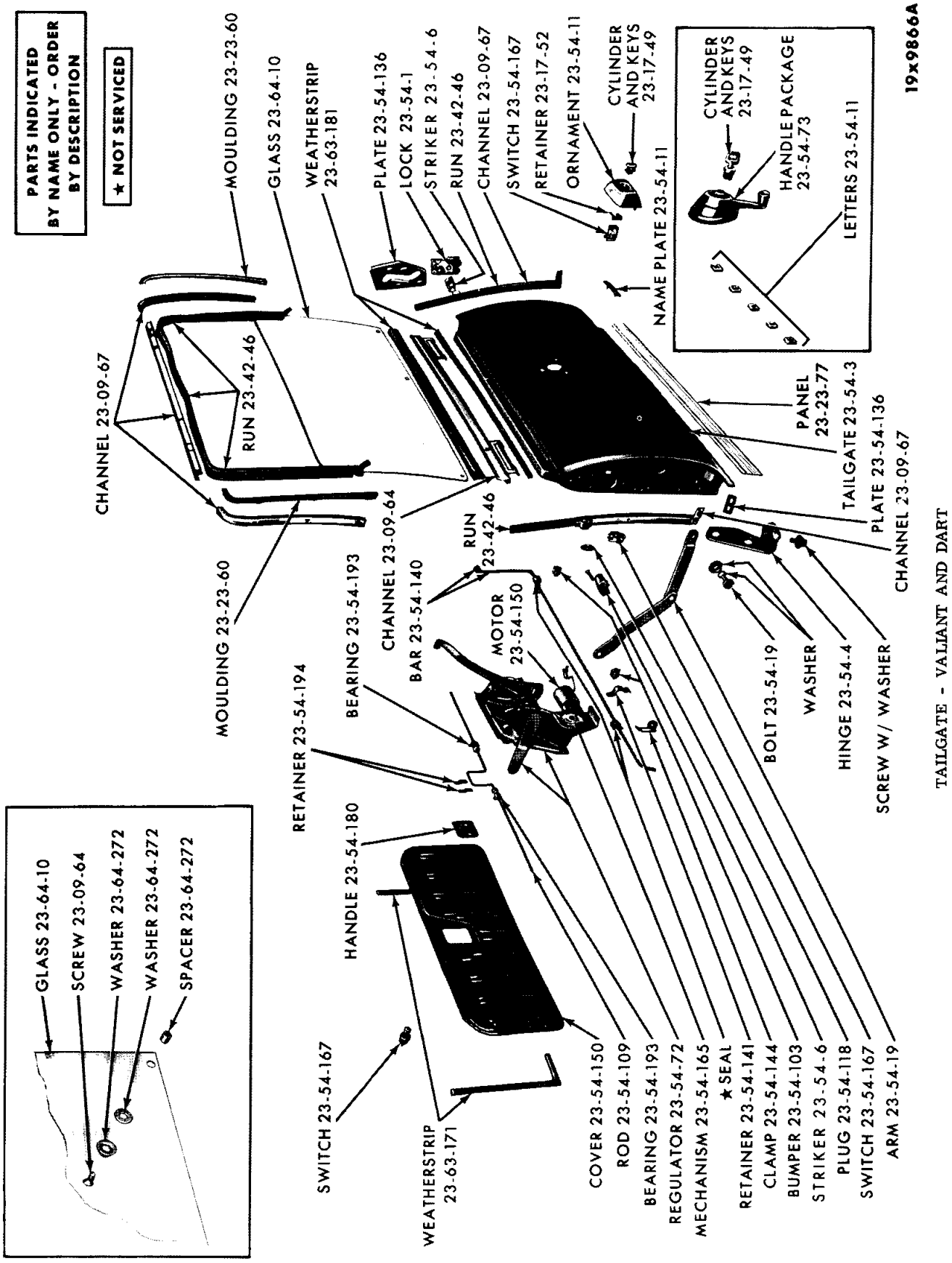
PARTS INDICATED BY NAME ONLY - ORDER BY DESCRIPTION
★ NOT SERVICED
19x9866A
MOULDING 23-23-60
GLASS 23-64-10
WEATHERSTRIP 23-63-181
PLATE 23-54-136
LOCK 23-54-1
STRIKER 23-54-6
RUN 23-42-46
CHANNEL 23-09-67
SWITCH 23-54-167
RETAINER 23-17-52
ORNAMENT 23-54-11
CYLINDER AND KEYS 23-17-49
NAME PLATE 23-54-11
CYLINDER AND KEYS 23-17-49
HANDLE PACKAGE 23-54-73
LETTERS 23-54-11
CHANNEL 23-09-67
RUN 23-42-46
PANEL 23-23-77
TAILGATE 23-54-3
PLATE 23-54-136
CHANNEL 23-09-67
MOULDING 23-23-60
CHANNEL 23-09-64
RUN 23-42-46
CHANNEL 23-54-193
BAR 23-54-140
MOTOR 23-54-150
BEARING 23-54-194
RETAINER 23-54-194
HANDLE 23-54-180
BOLT 23-54-19
WASHER
HINGE 23-54-4
SCREW W/ WASHER
TAILGATE - VALIANT AND DART
GLASS 23-64-10
SCREW 23-09-64
WASHER 23-64-272
WASHER 23-64-272
SPACER 23-64-272
SWITCH 23-54-167
WEATHERSTRIP 23-63-171
COVER 23-54-150
ROD 23-54-109
BEARING 23-54-193
REGULATOR 23-54-72
MECHANISM 23-54-165
★SEAL
RETAINER 23-54-141
CLAMP 23-54-144
BUMPER 23-54-103
STRIKER 23-54-6
PLUG 23-54-118
SWITCH 23-54-167
ARM 23-54-19

MyMopar.com

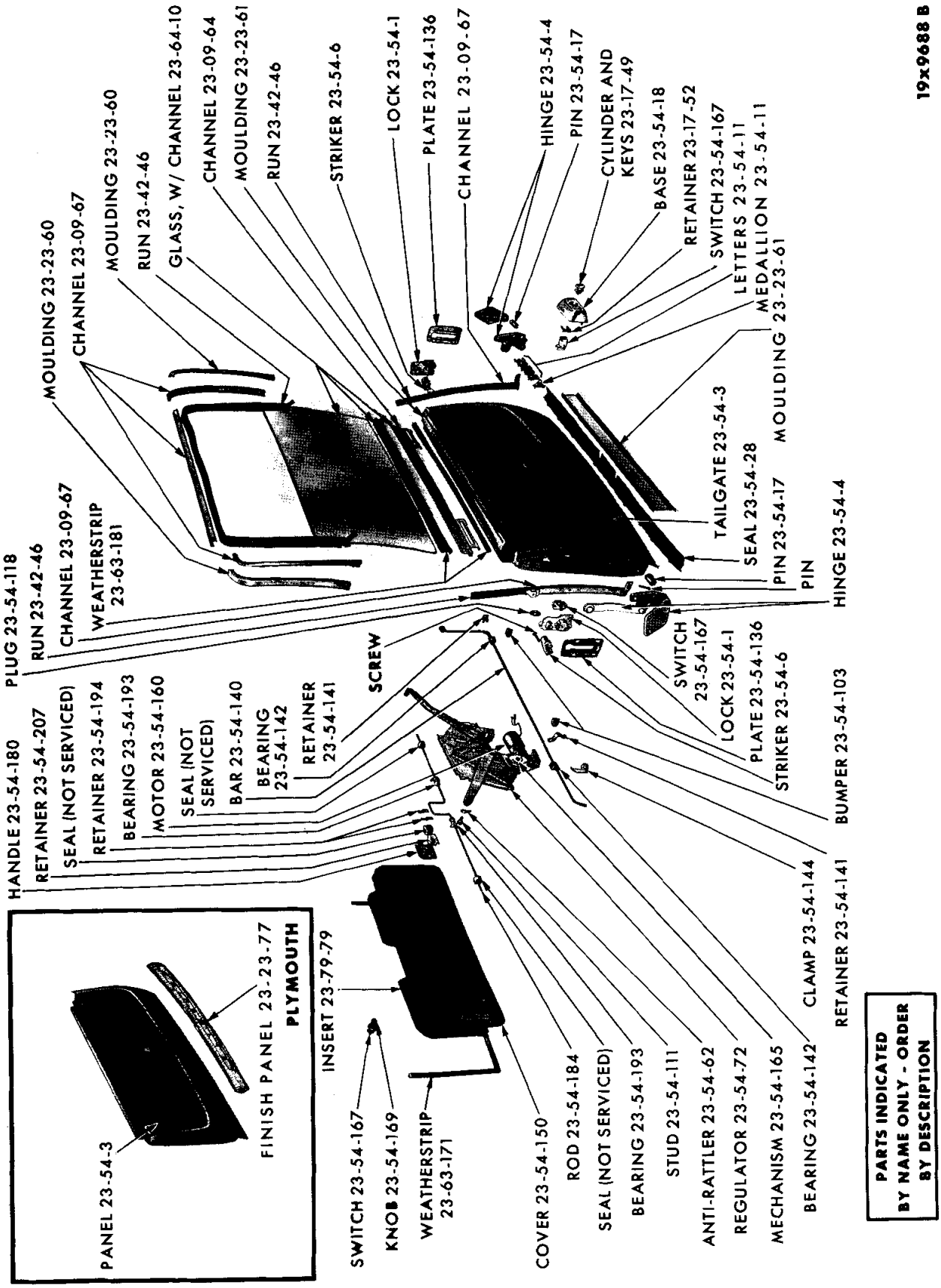

TAILGATE - BELVEDERE AND CORONET

MyMopar.com

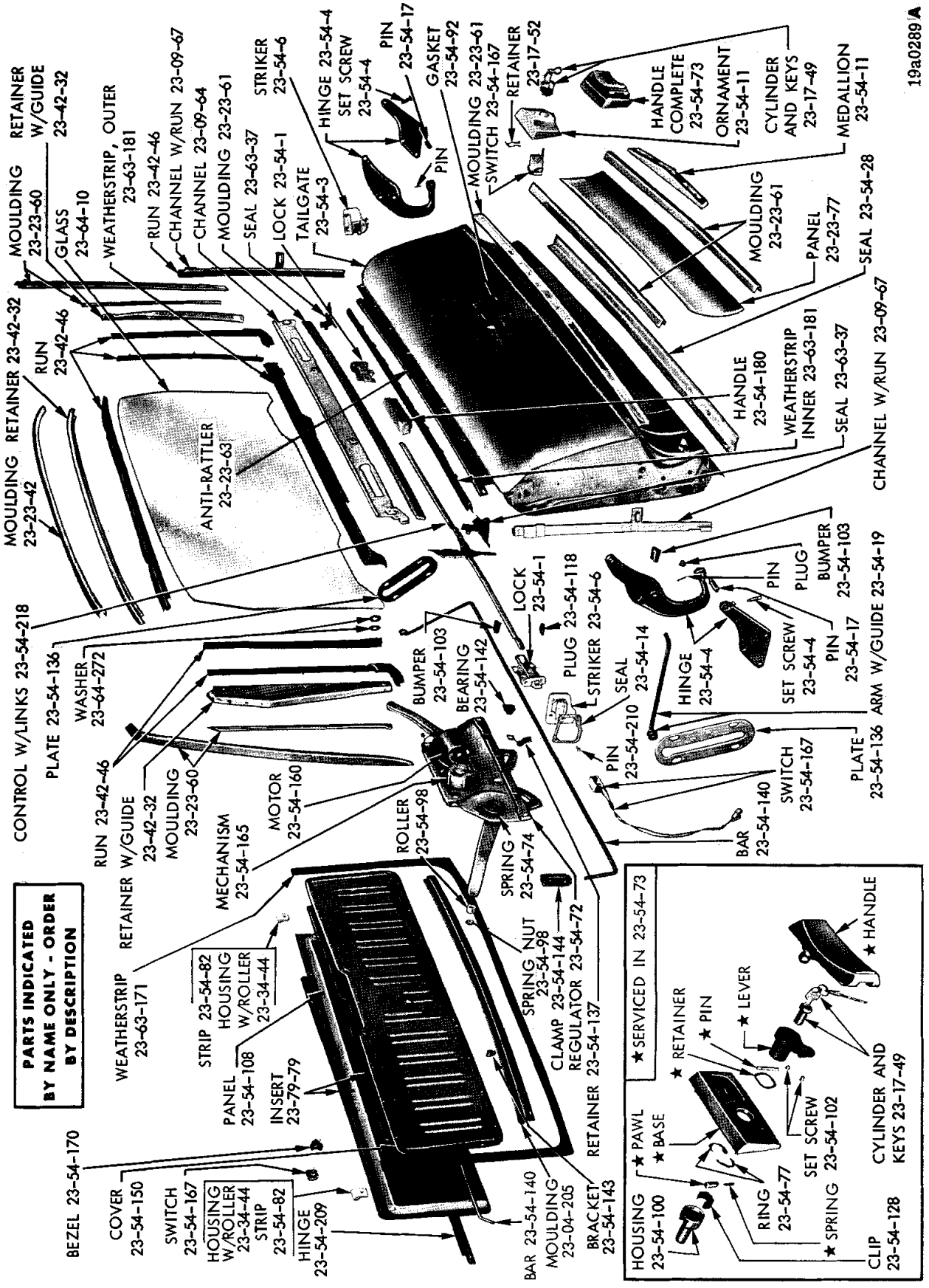

TAILGATE - PLYMOUTH, DODGE AND CHRYSLER

MyMopar.com

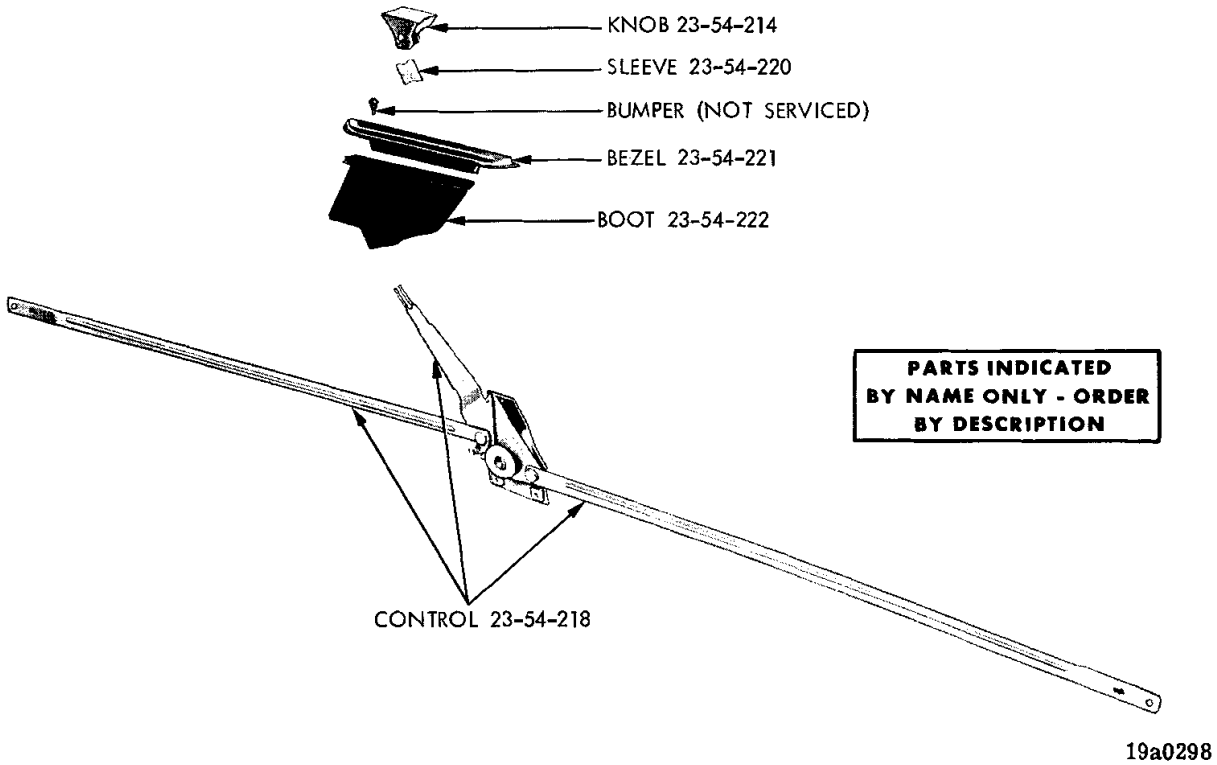

TAILGATE MECHANISM (AFTER TYPE)

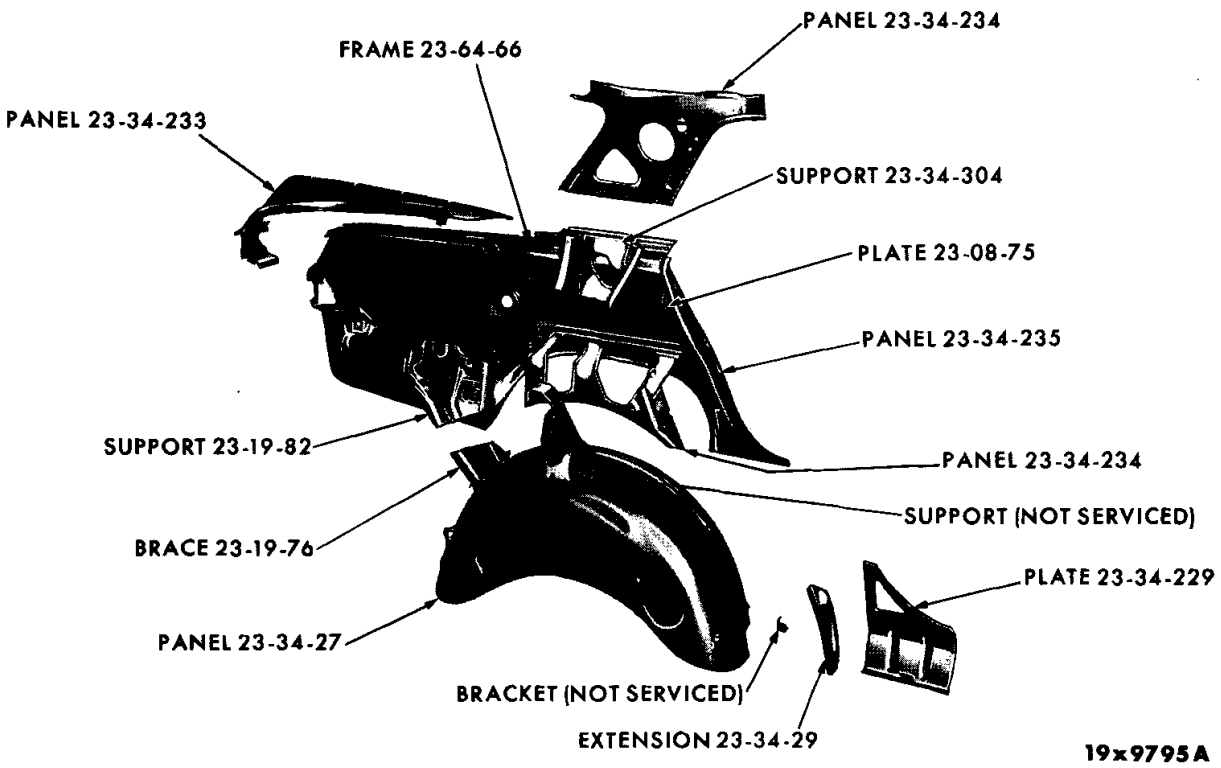

REAR QUARTER PANEL - VALIANT 4 DOOR SEDAN

MyMopar.com

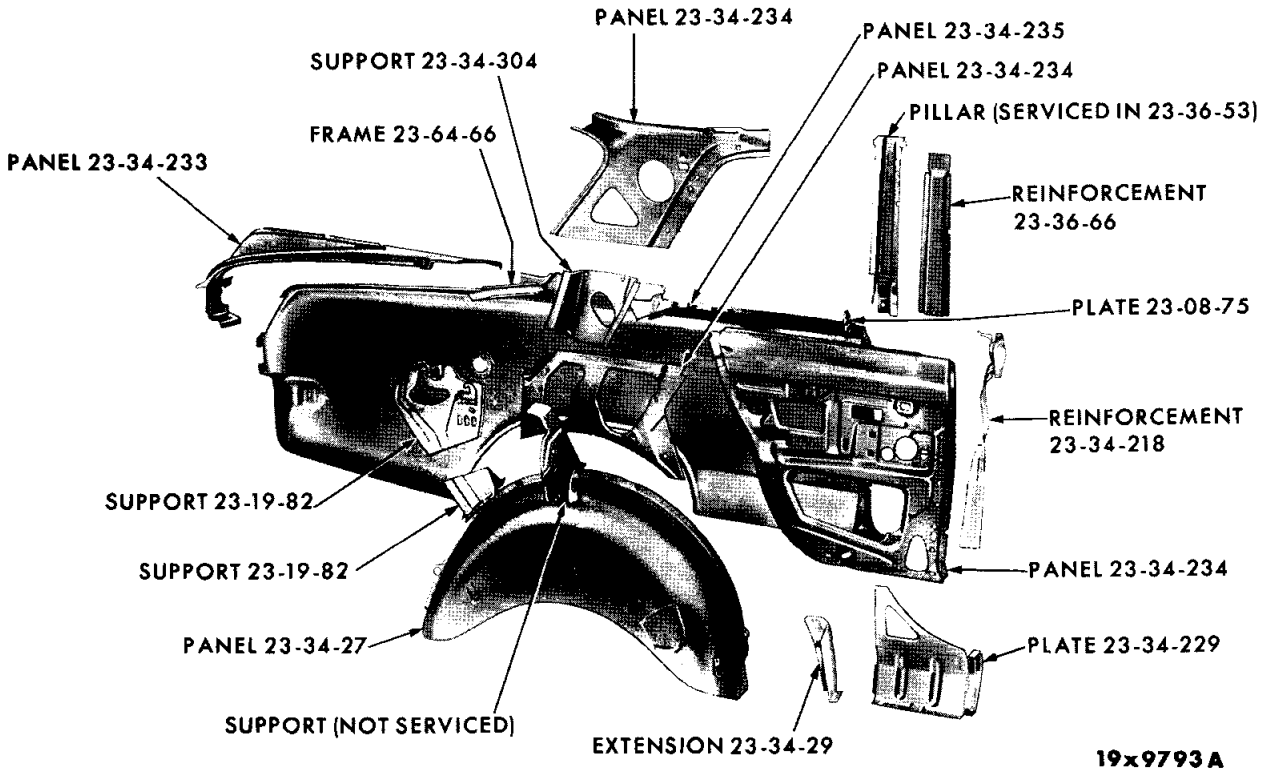

REAR QUARTER PANEL - VALIANT 2 DOOR SEDAN AND 2 DOOR HARDTOP

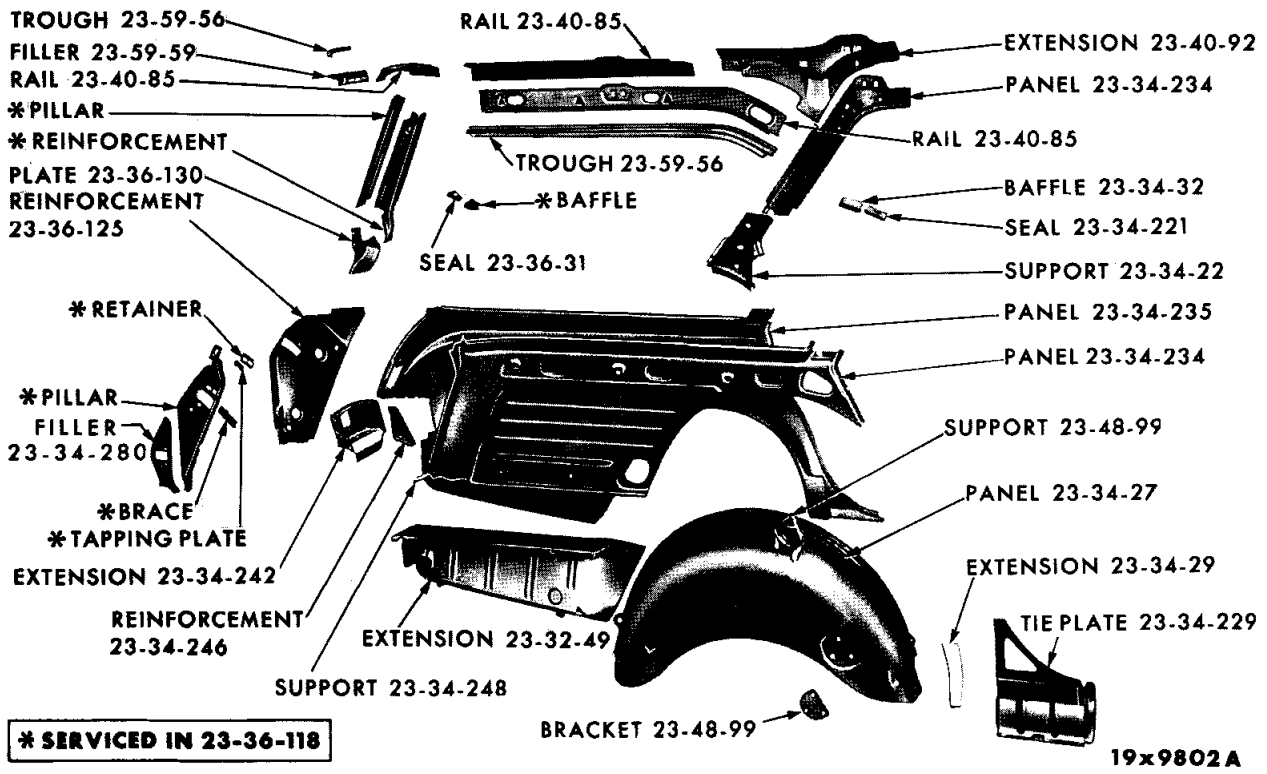

REAR QUARTER PANEL - VALIANT STATION WAGON

MyMopar.com

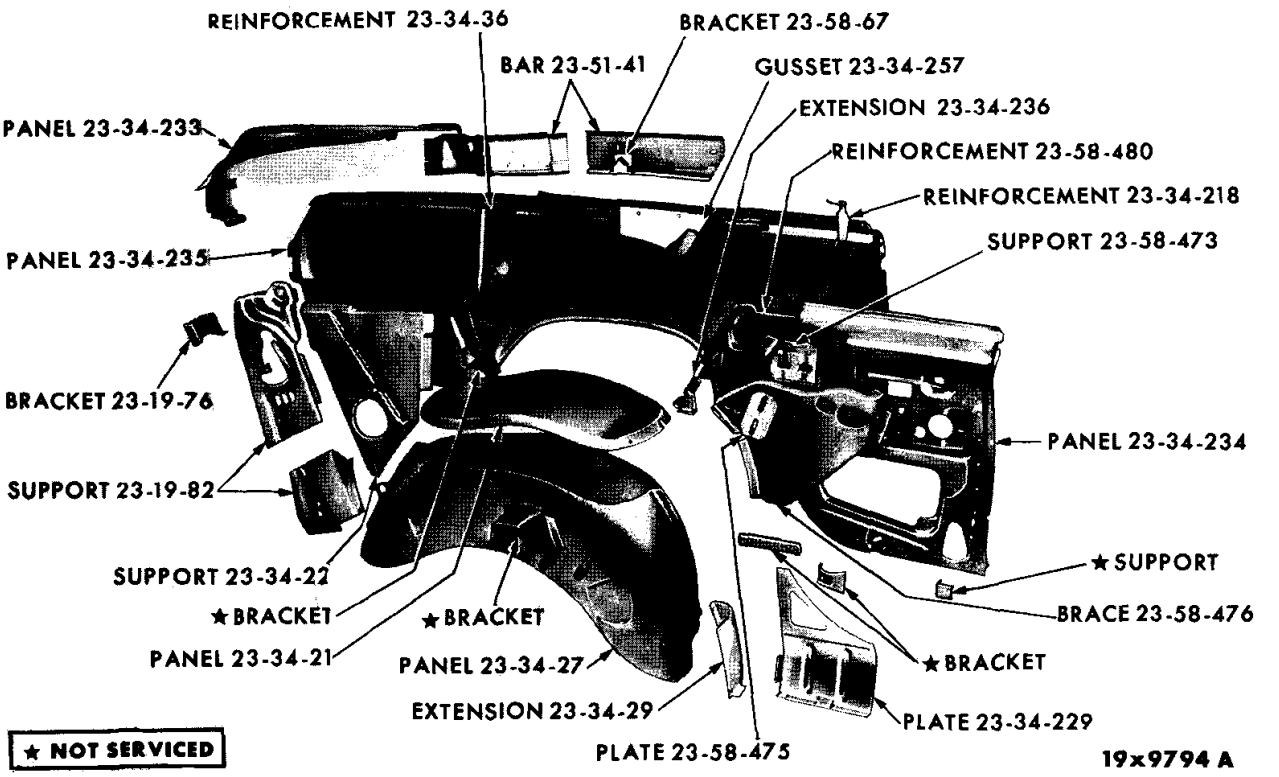

REAR QUARTER PANEL - VALIANT CONVERTIBLE COUPE

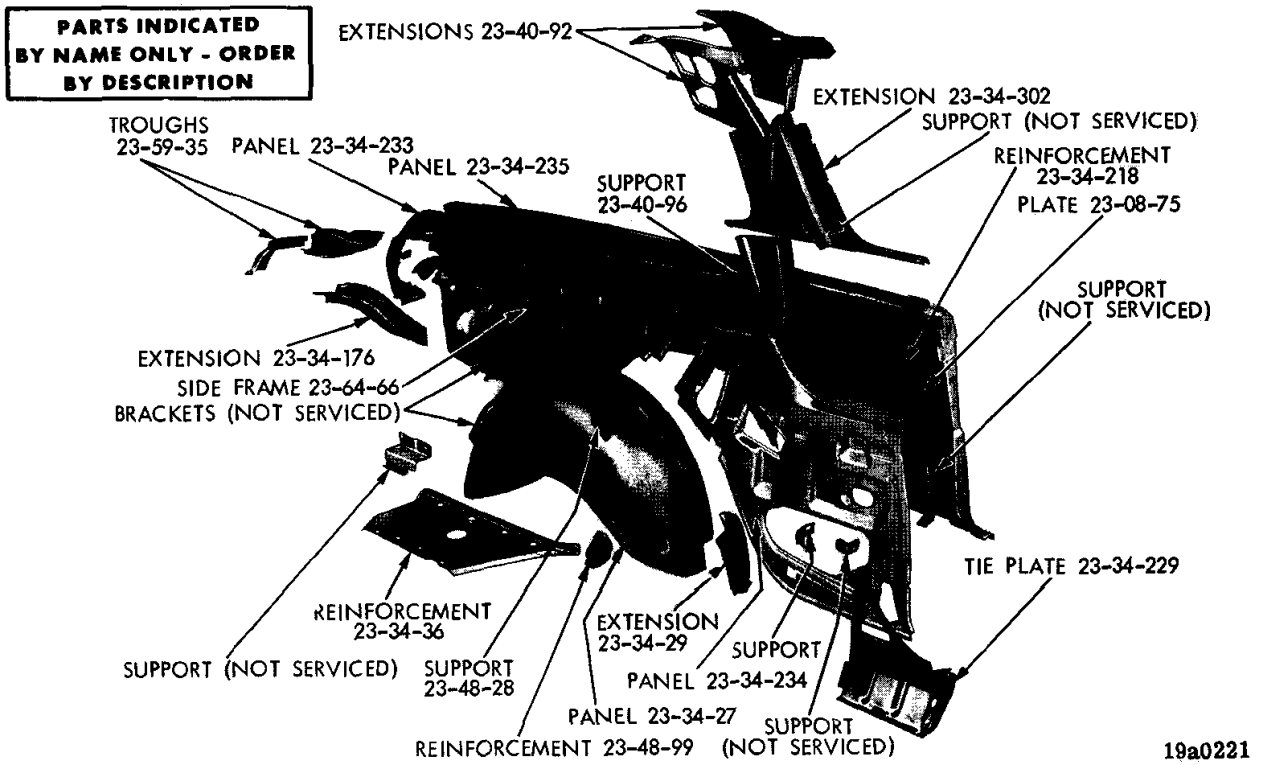

REAR QUARTER PANEL - VALIANT BARRACUDA

MyMopar.com

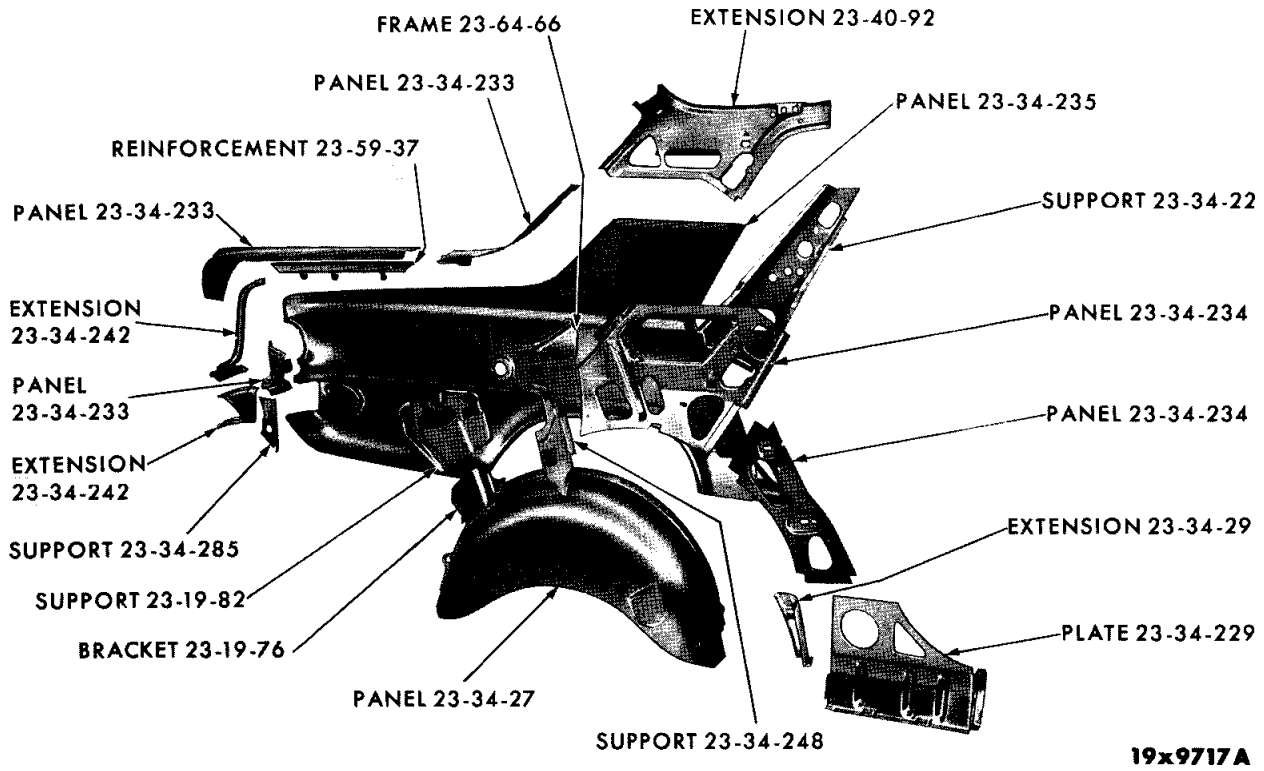

REAR QUARTER PANEL - DART 4 DOOR SEDAN

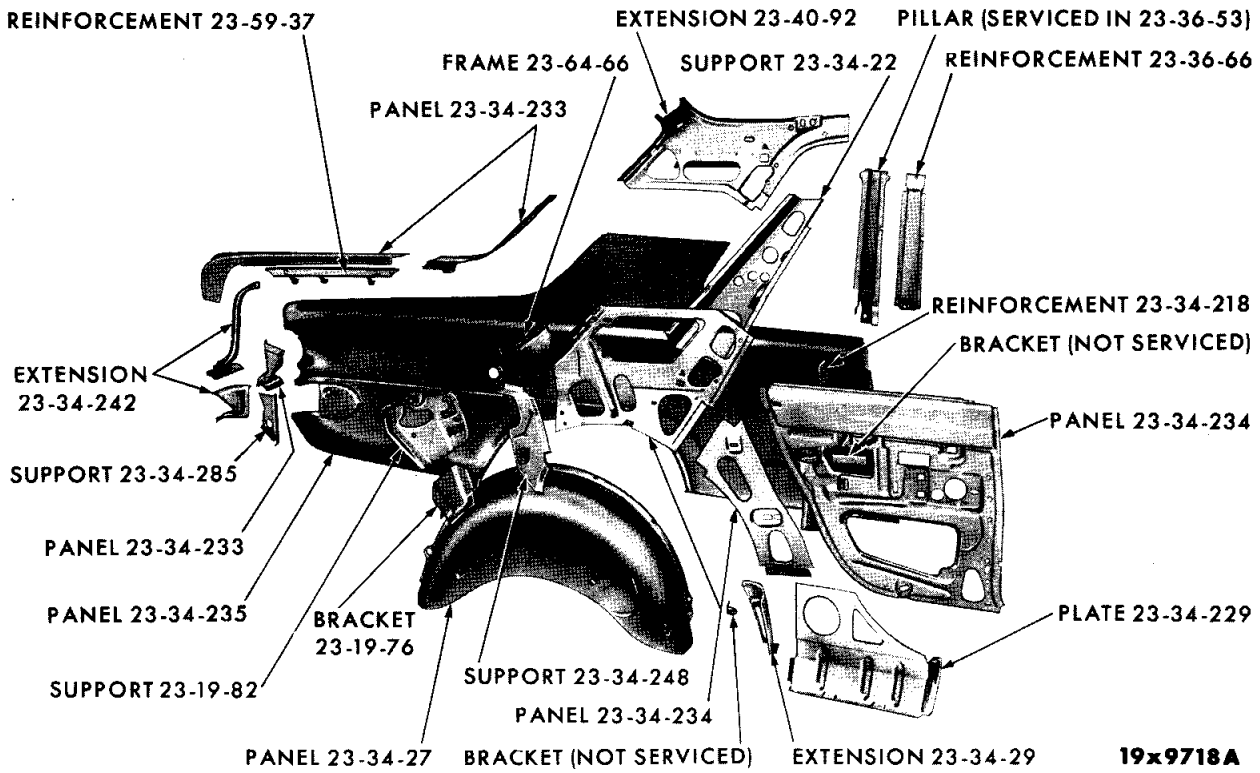

REAR QUARTER PANEL - DART 2 DOOR SEDAN AND 2 DOOR HARDTOP

MyMopar.com

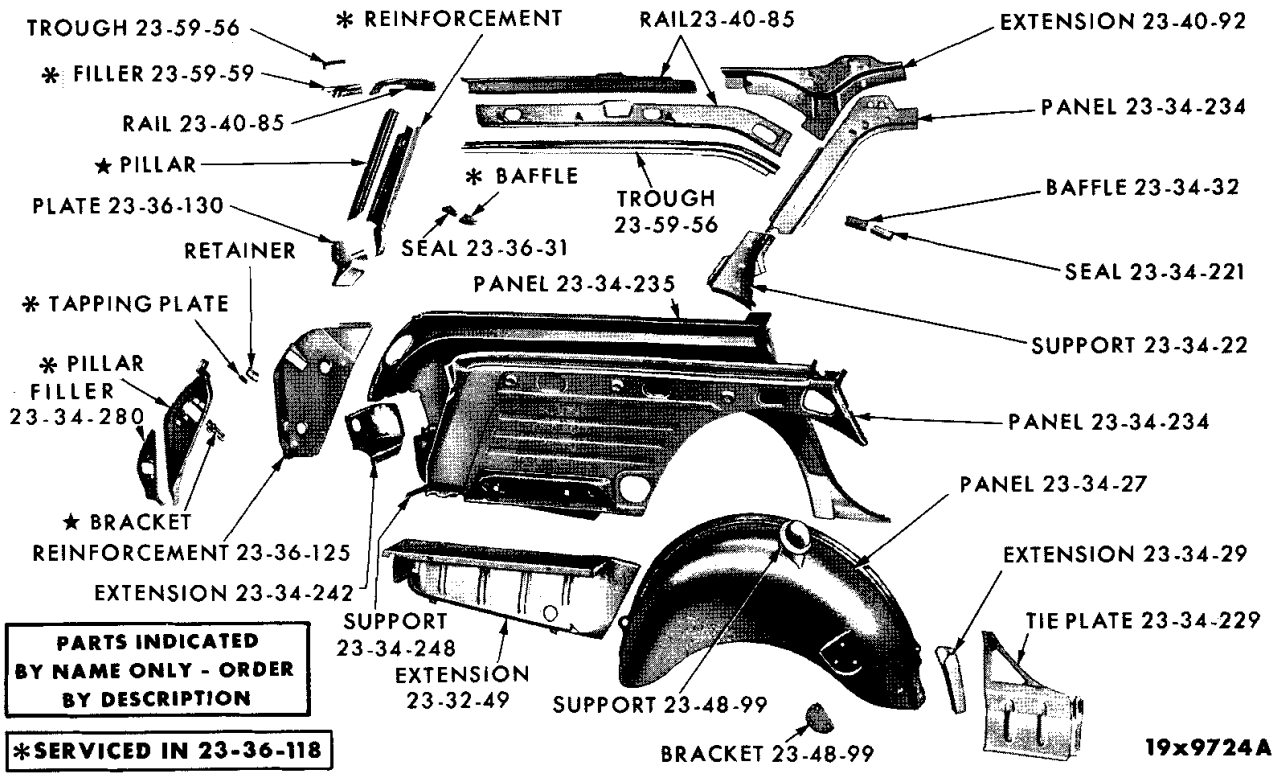

REAR QUARTER PANEL - DART STATION WAGON

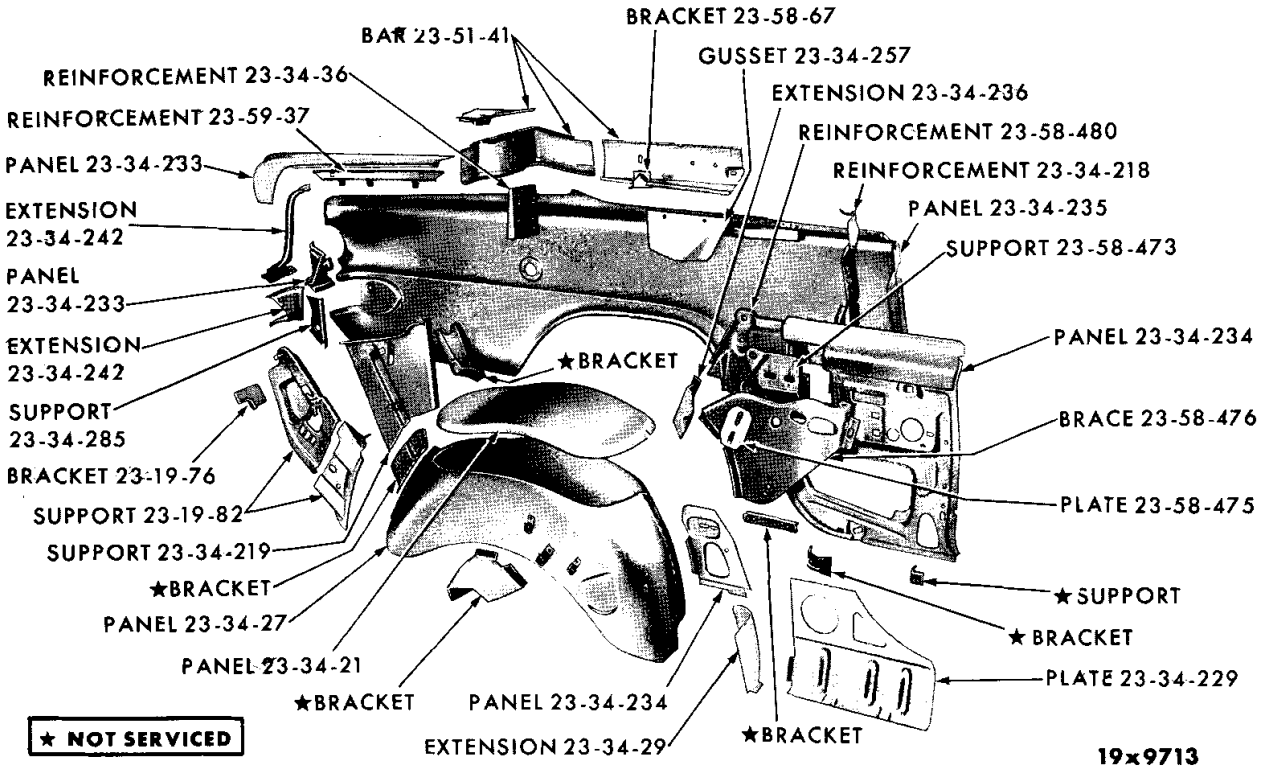

REAR QUARTER PANEL - DART CONVERTIBLE COUPE

MyMopar.com

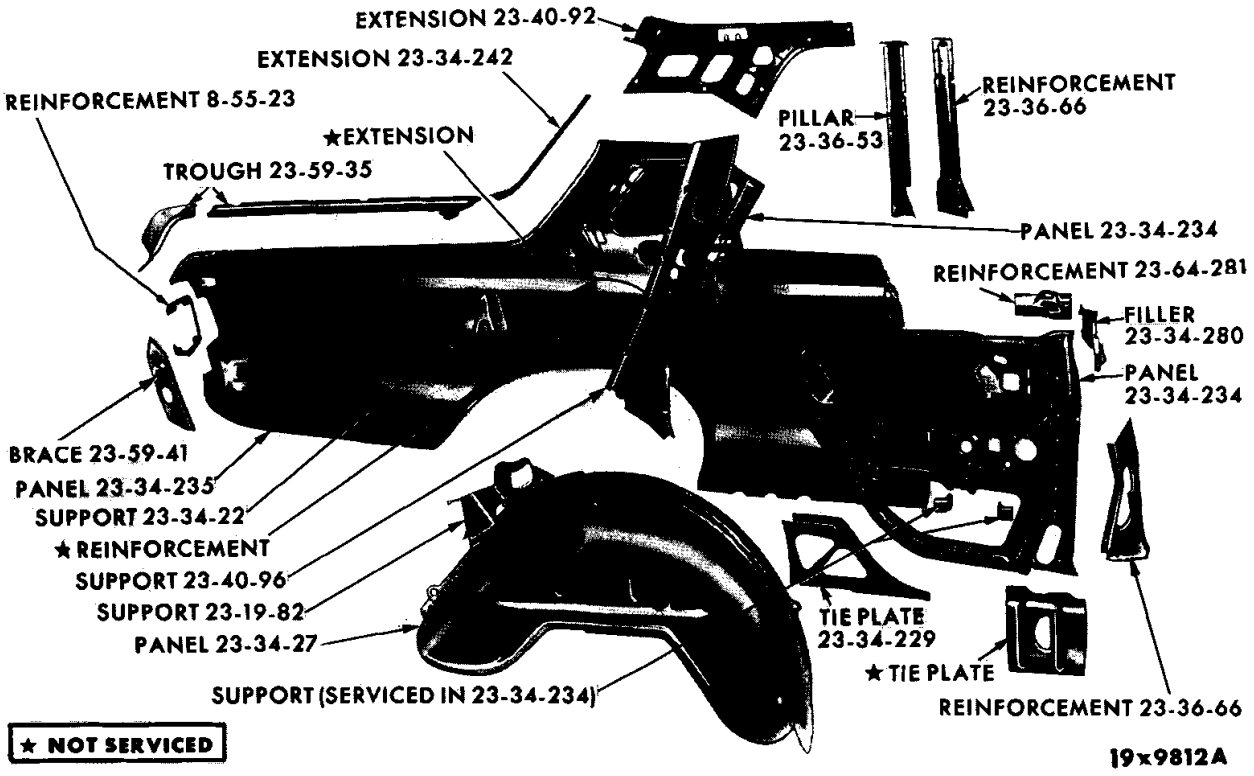

REAR QUARTER PANEL - BELVEDERE 2 DOOR SEDAN

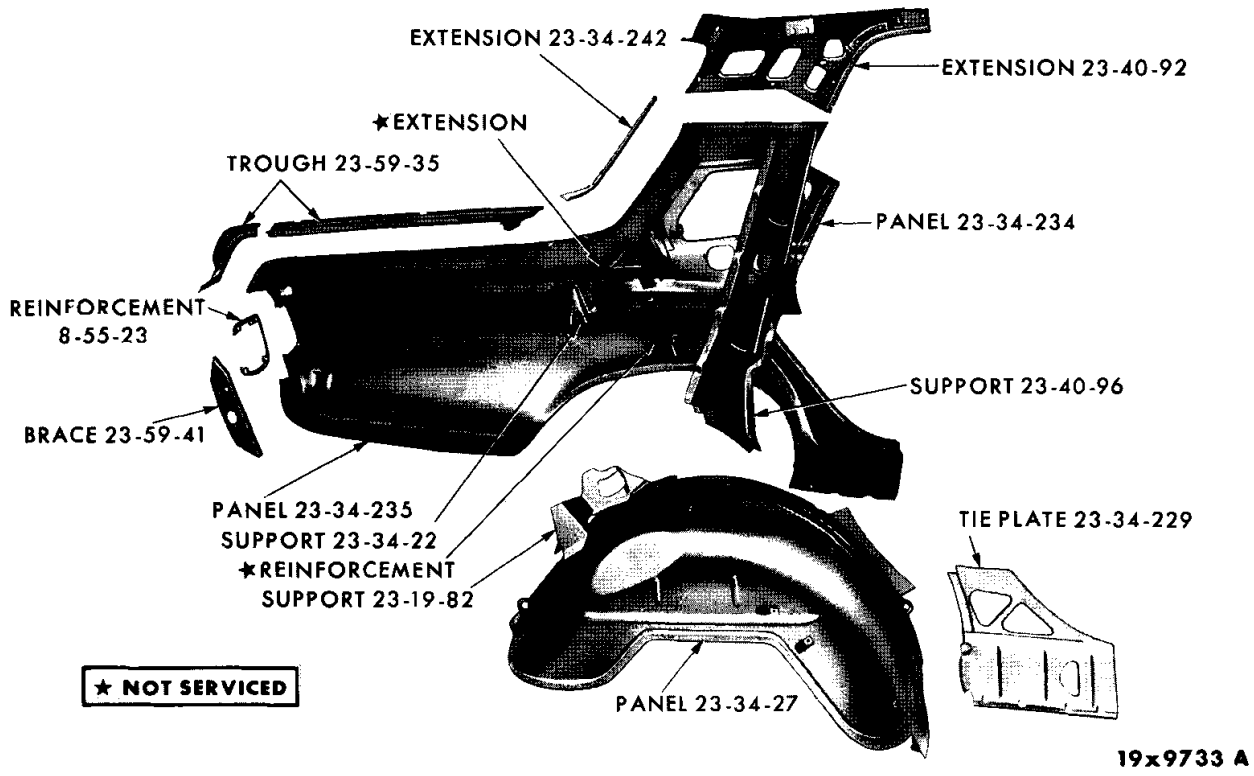

REAR QUARTER PANEL - BELVEDERE 4 DOOR SEDAN

MyMopar.com

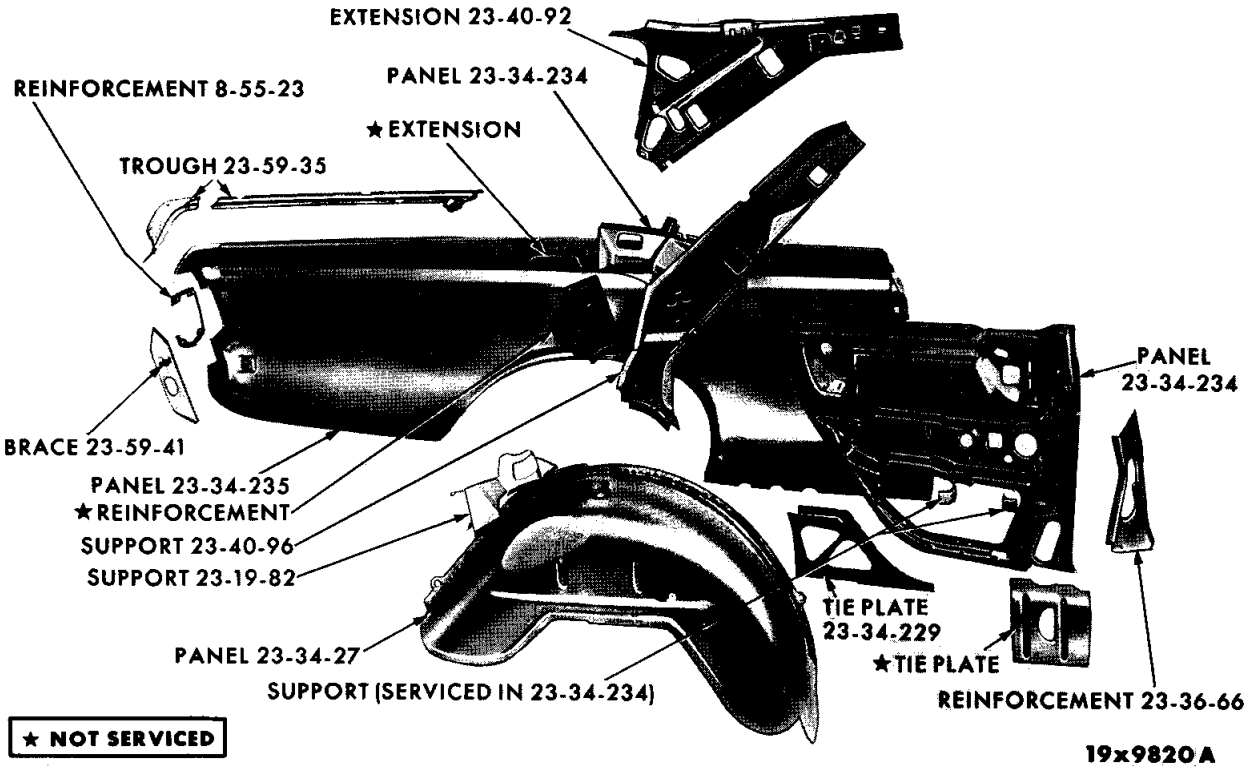

REAR QUARTER PANEL - BELVEDERE 2 DOOR HARDTOP

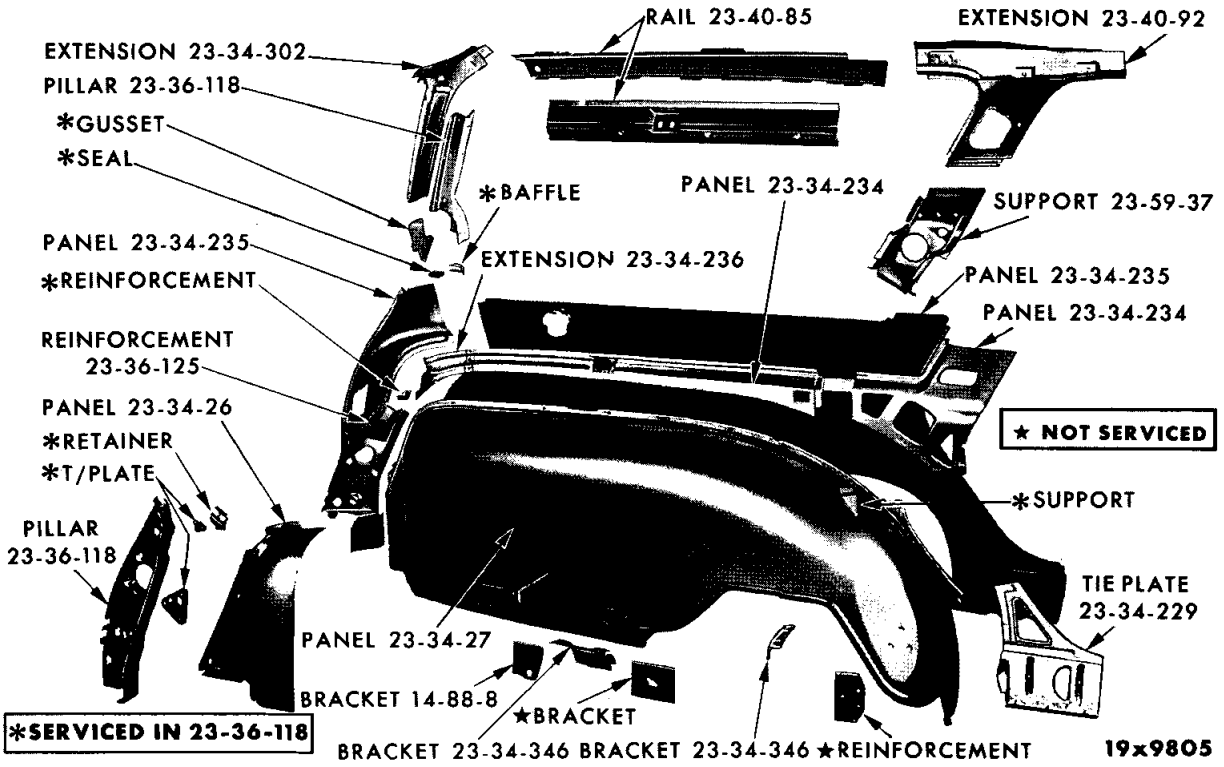

REAR QUARTER PANEL - BELVEDERE STATION WAGON

MyMopar.com

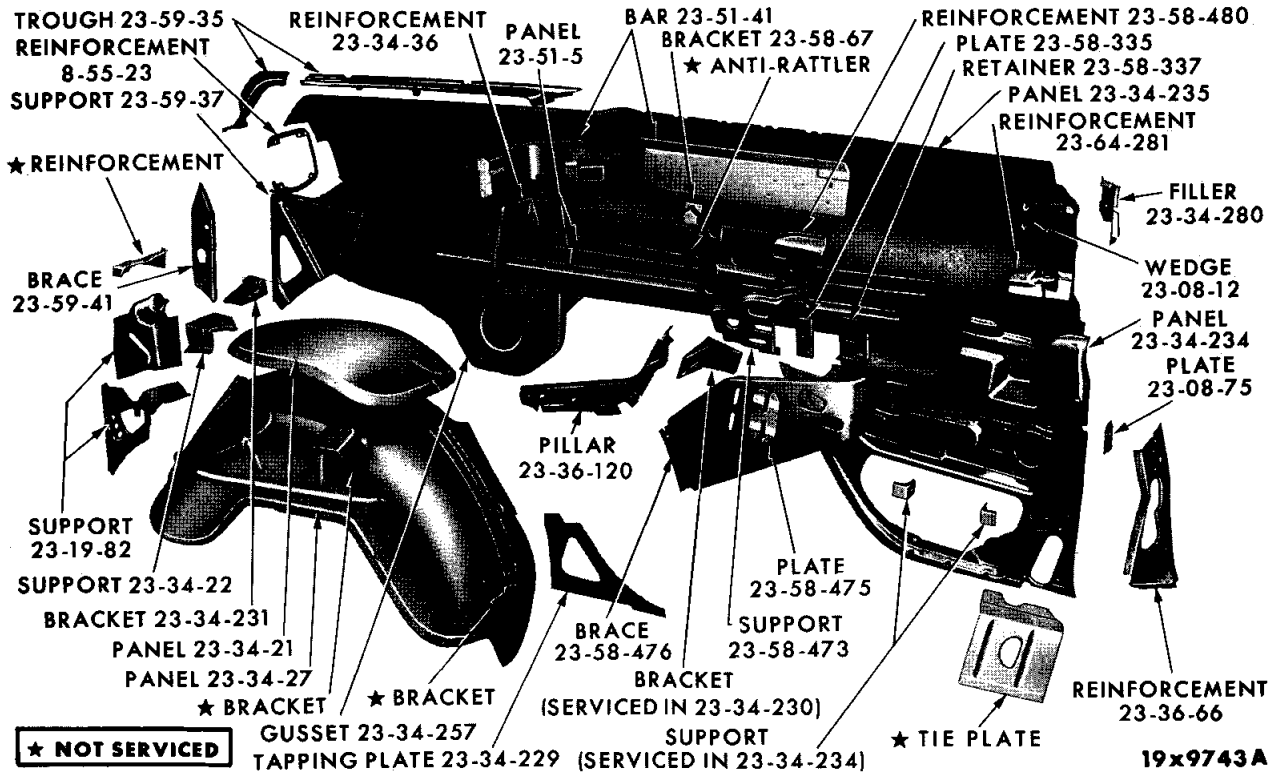

REAR QUARTER PANEL - BELVEDERE CONVERTIBLE COUPE

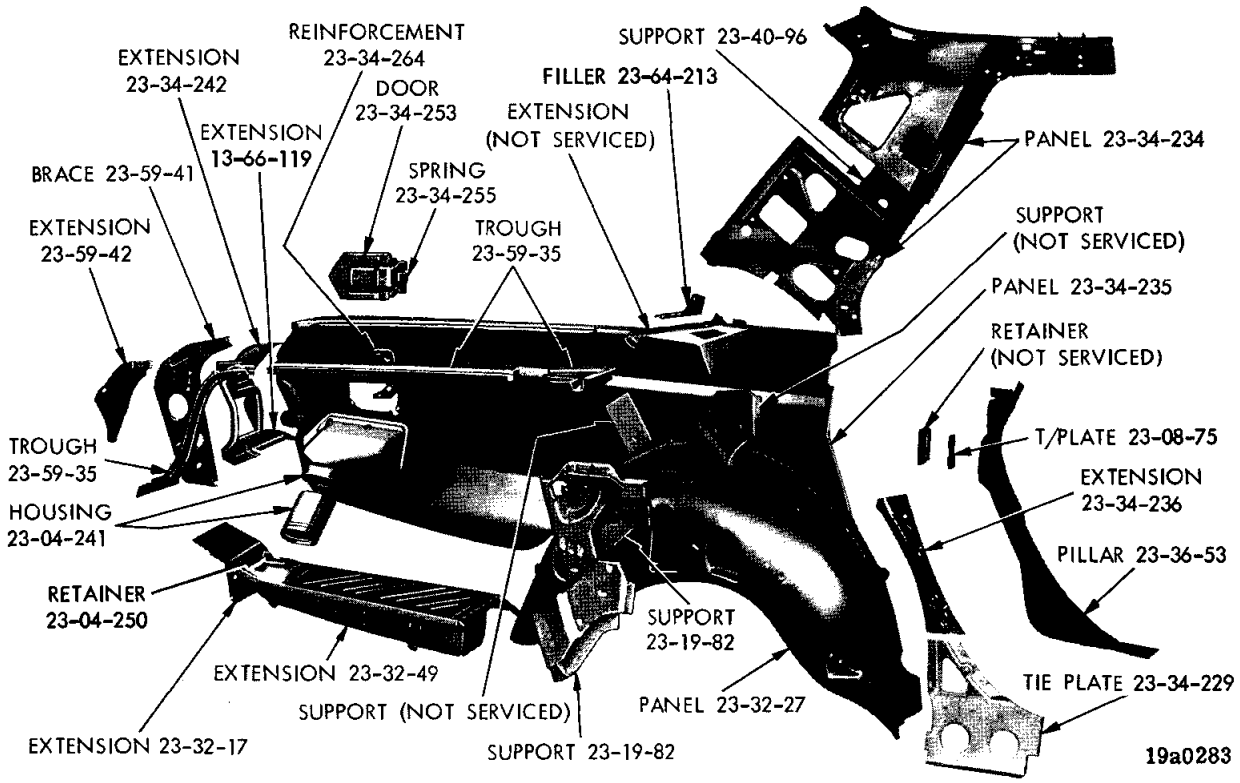

REAR QUARTER PANEL - PLYMOUTH 4 DOOR SEDAN AND 4 DOOR HARDTOP

MyMopar.com

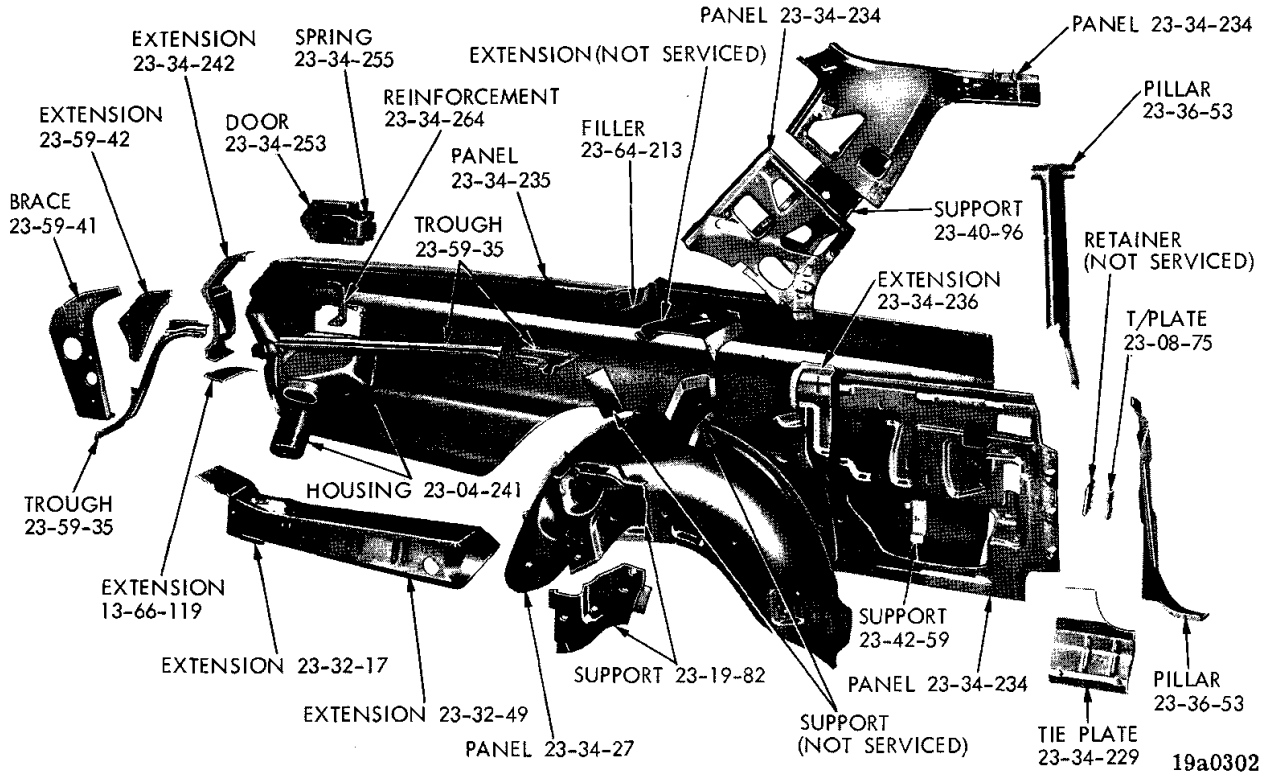

REAR QUARTER PANEL - PLYMOUTH 2 DOOR SEDAN

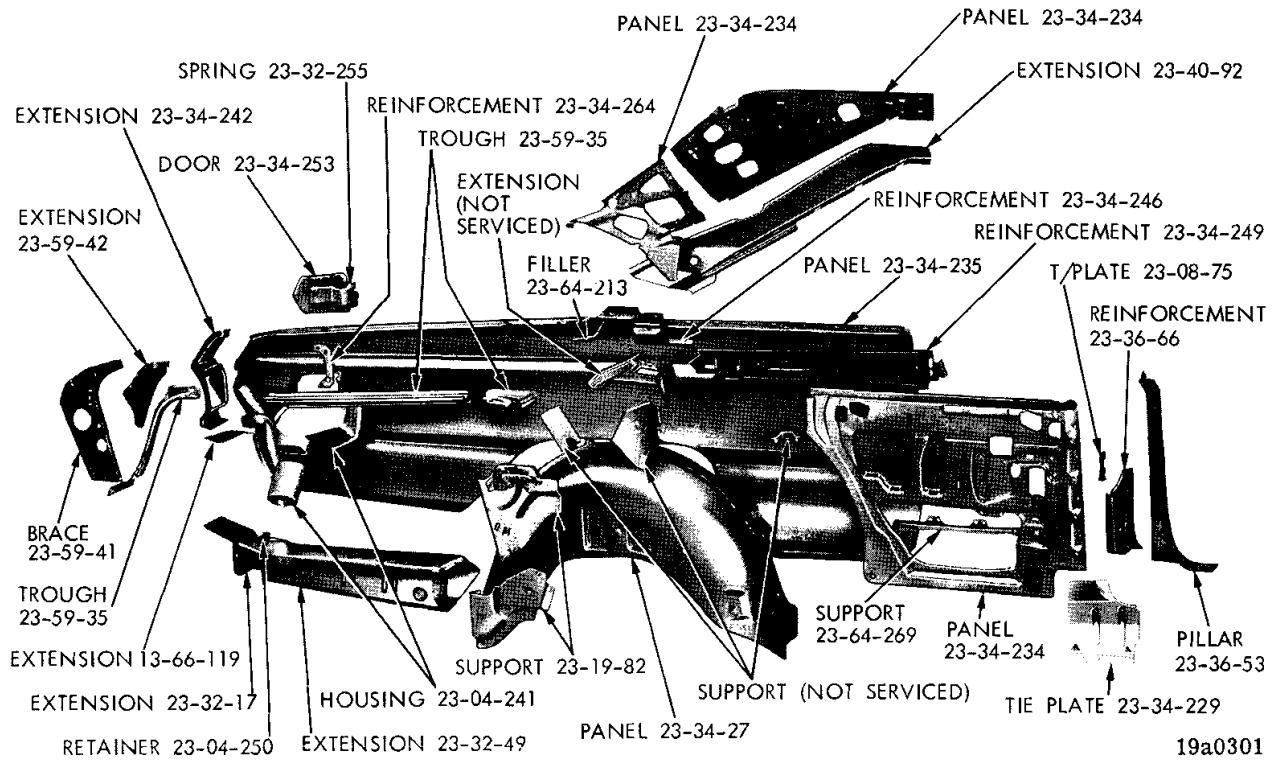

REAR QUARTER PANEL - PLYMOUTH 2 DOOR HARDTOP

MyMopar.com

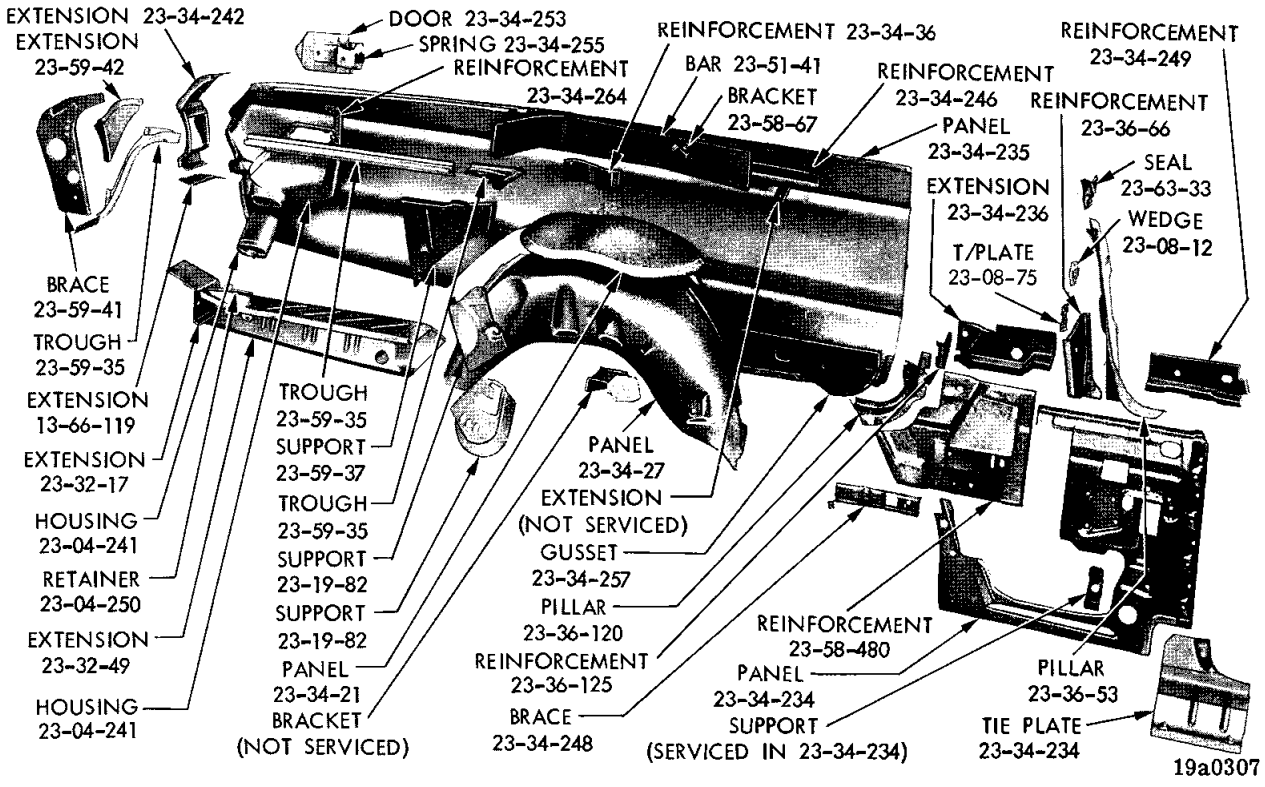

REAR QUARTER PANEL - PLYMOUTH CONVERTIBLE COUPE

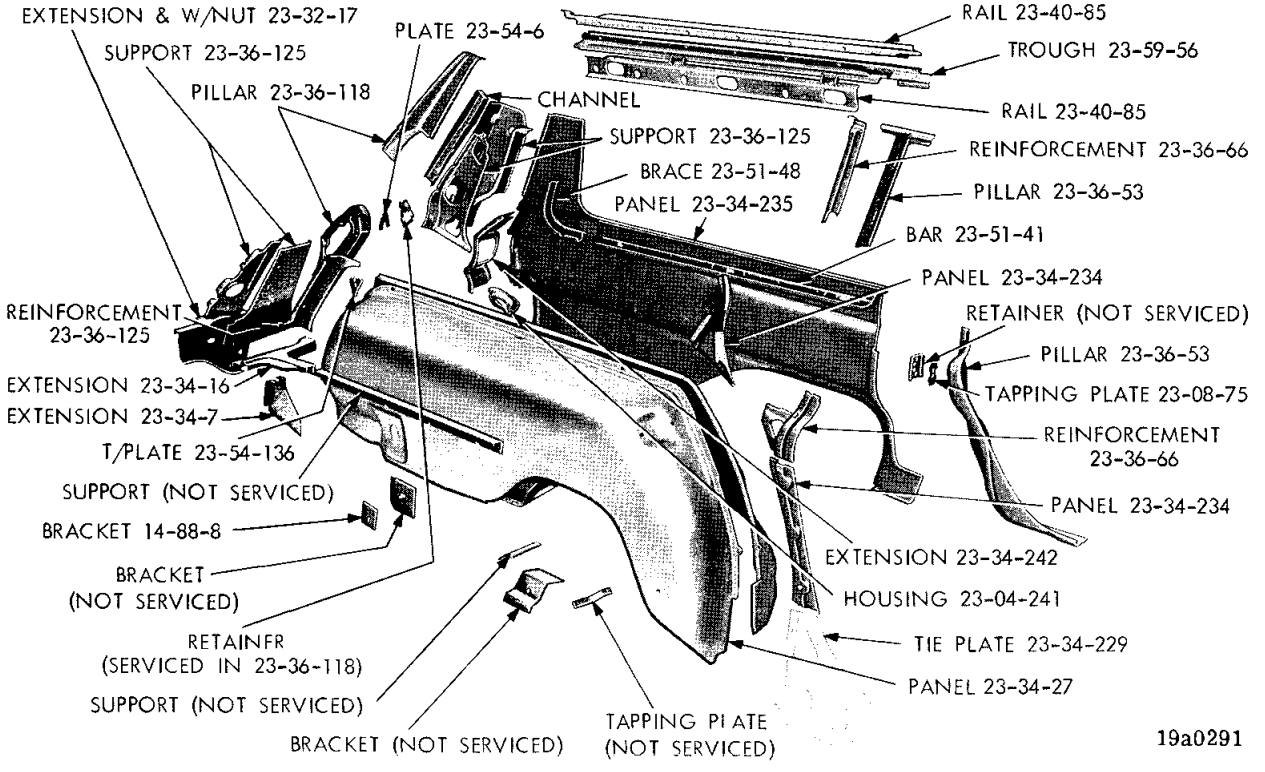

REAR QUARTER PANEL - PLYMOUTH P STATION WAGON

MyMopar.com

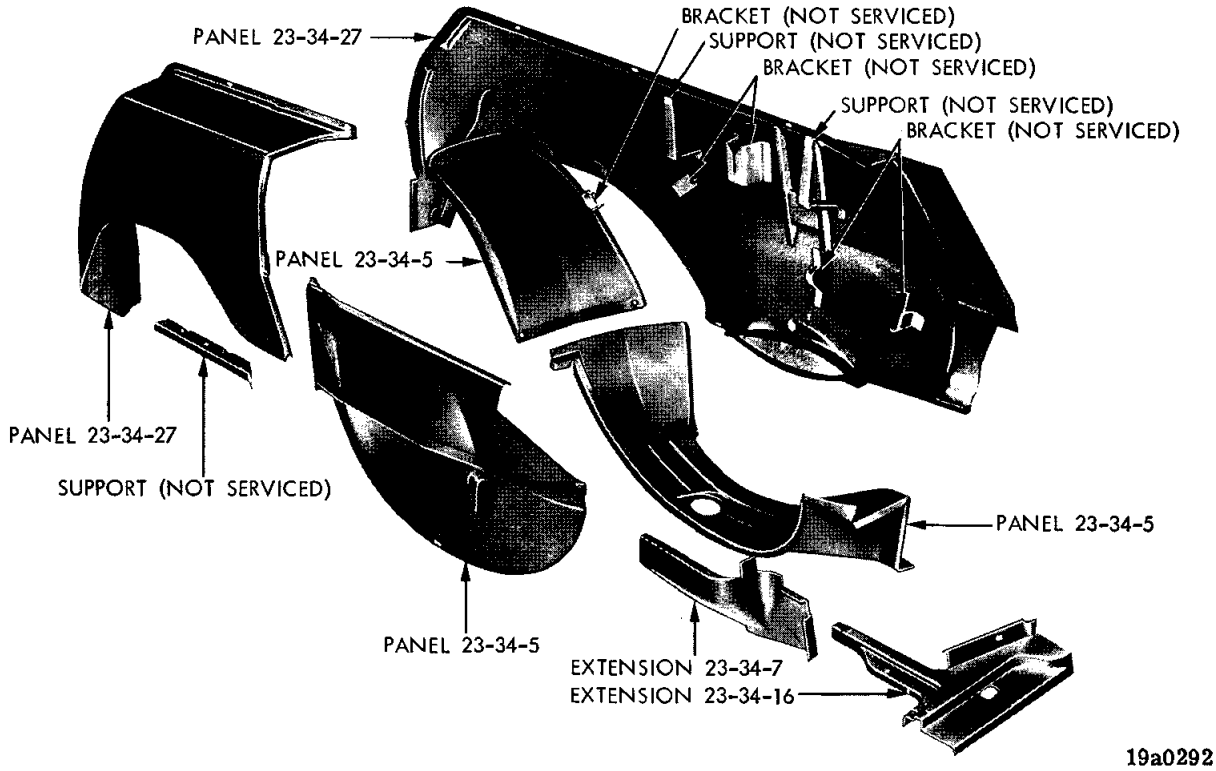

REAR QUARTER SPARE TIRE PANELS - PLYMOUTH, DODGE AND CHRYSLER STATION WAGONS

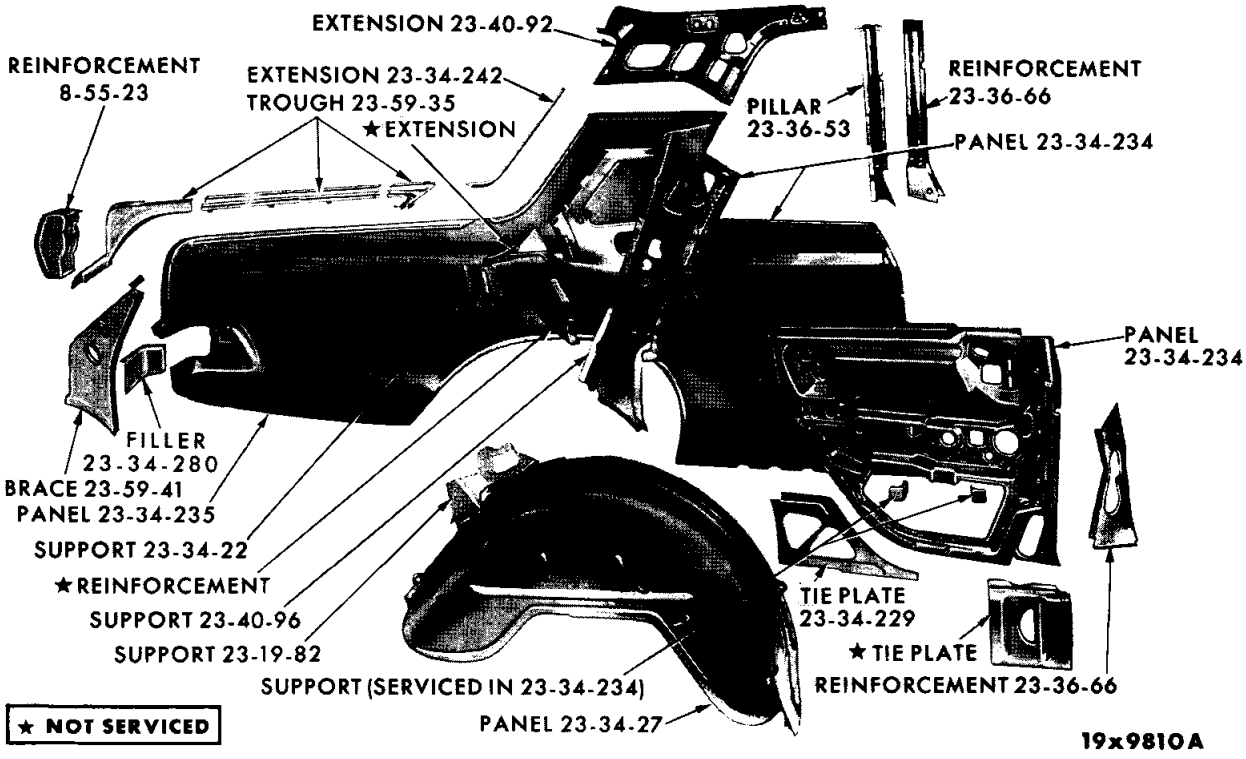

REAR QUARTER PANEL - CORONET 2 DOOR SEDAN

MyMopar.com

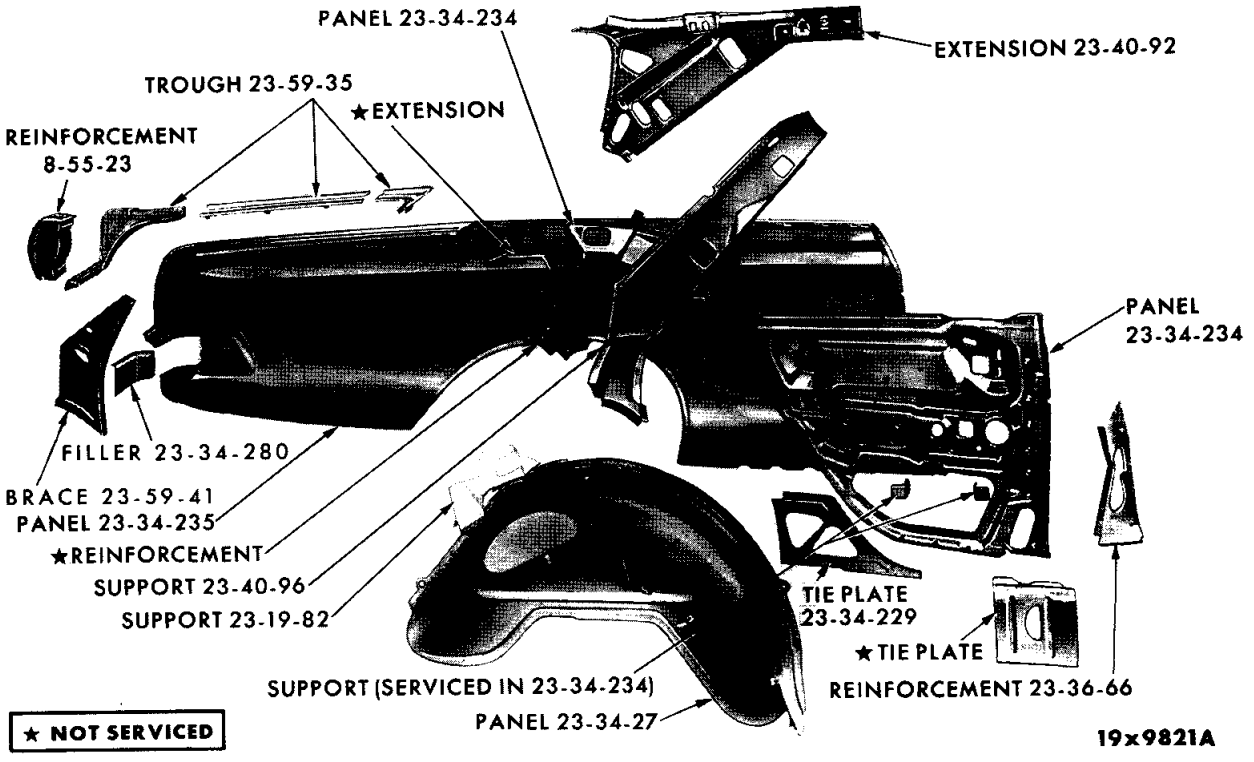

REAR QUARTER PANEL - CORONET 2 DOOR HARDTOP

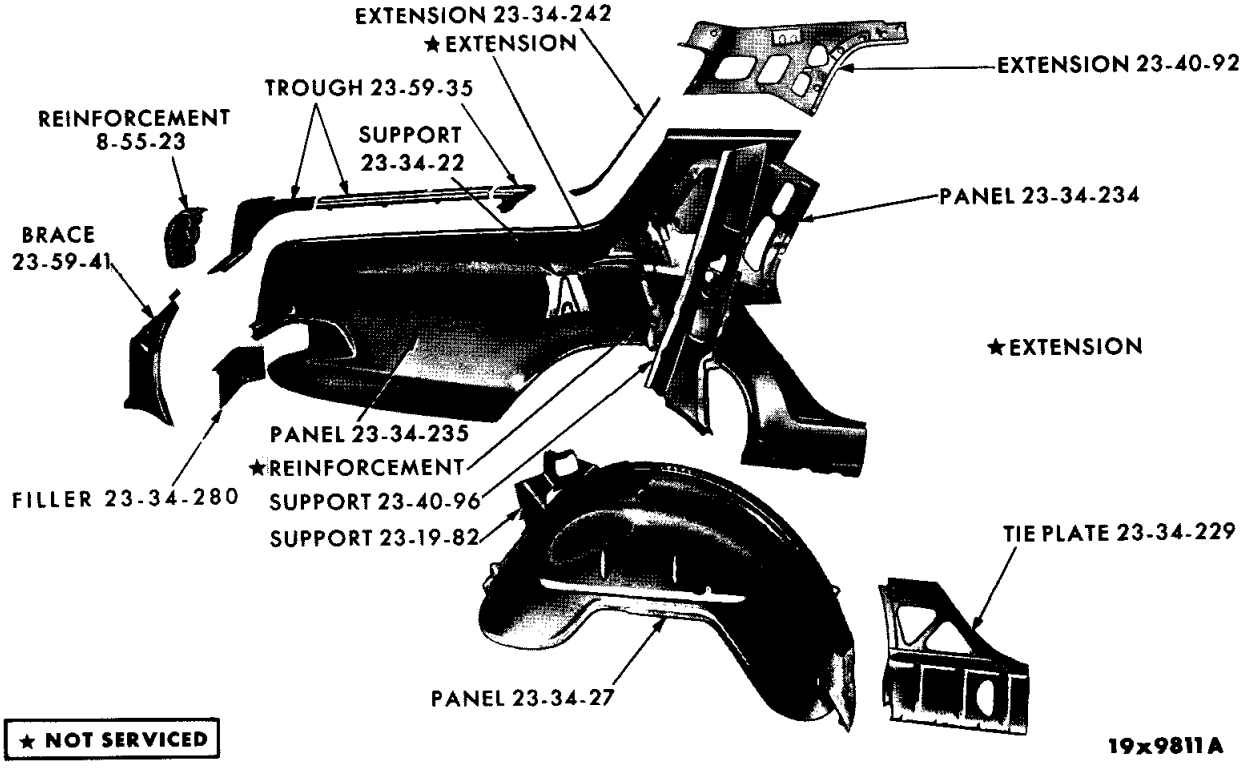

REAR QUARTER PANEL - CORONET 4 DOOR SEDAN

MyMopar.com

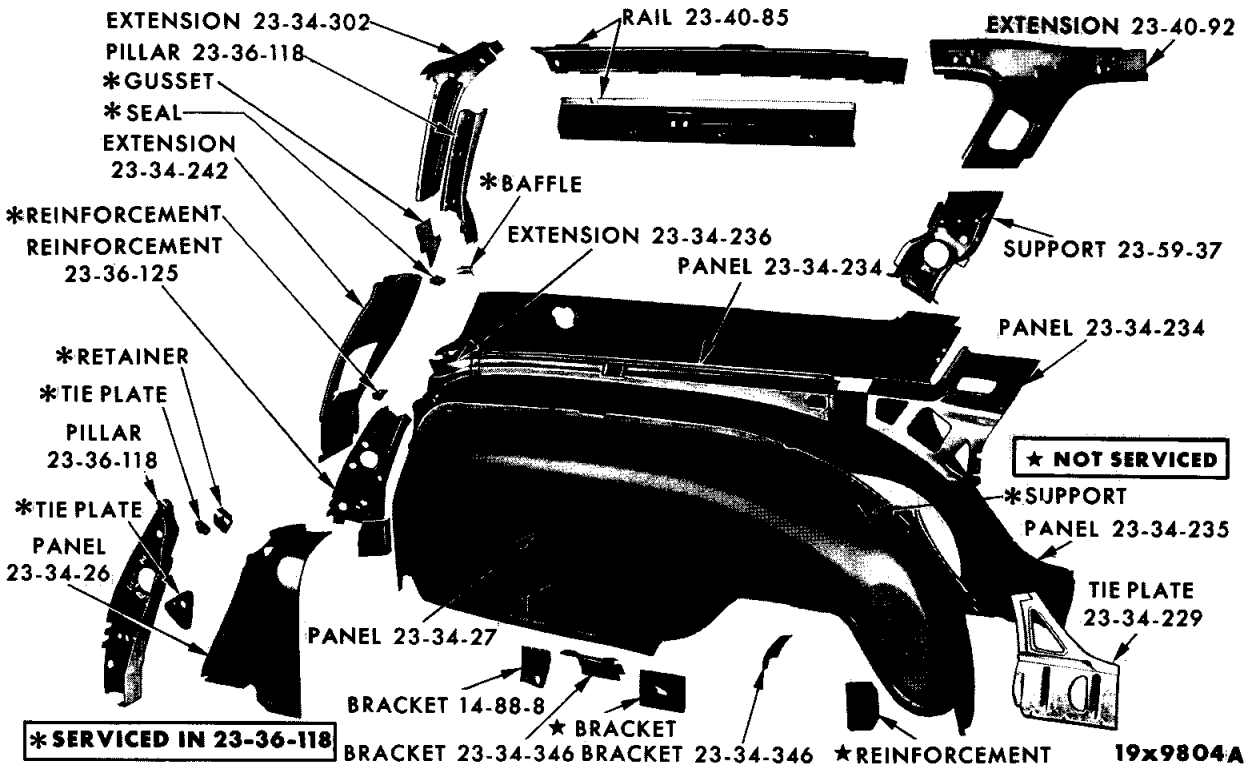

REAR QUARTER PANEL - CORONET STATION WAGON

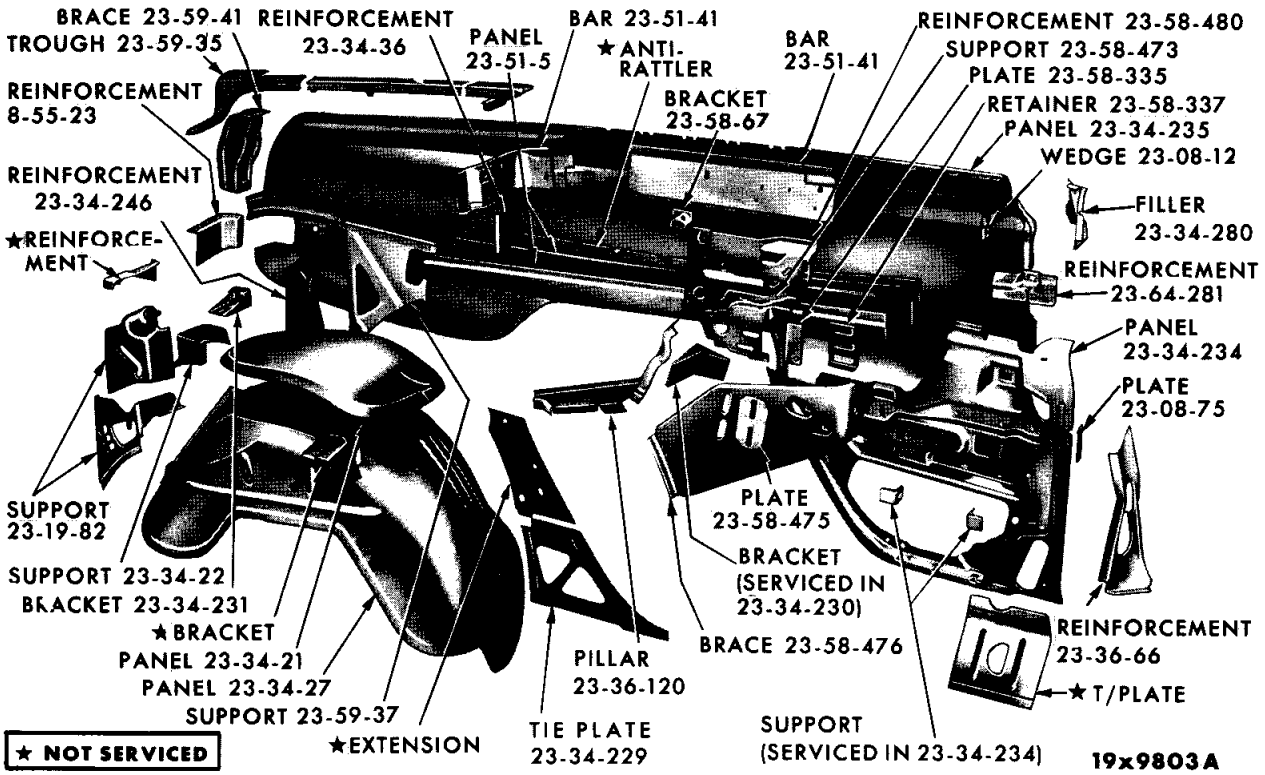

REAR QUARTER PANEL - CORONET CONVERTIBLE COUPE

MyMopar.com

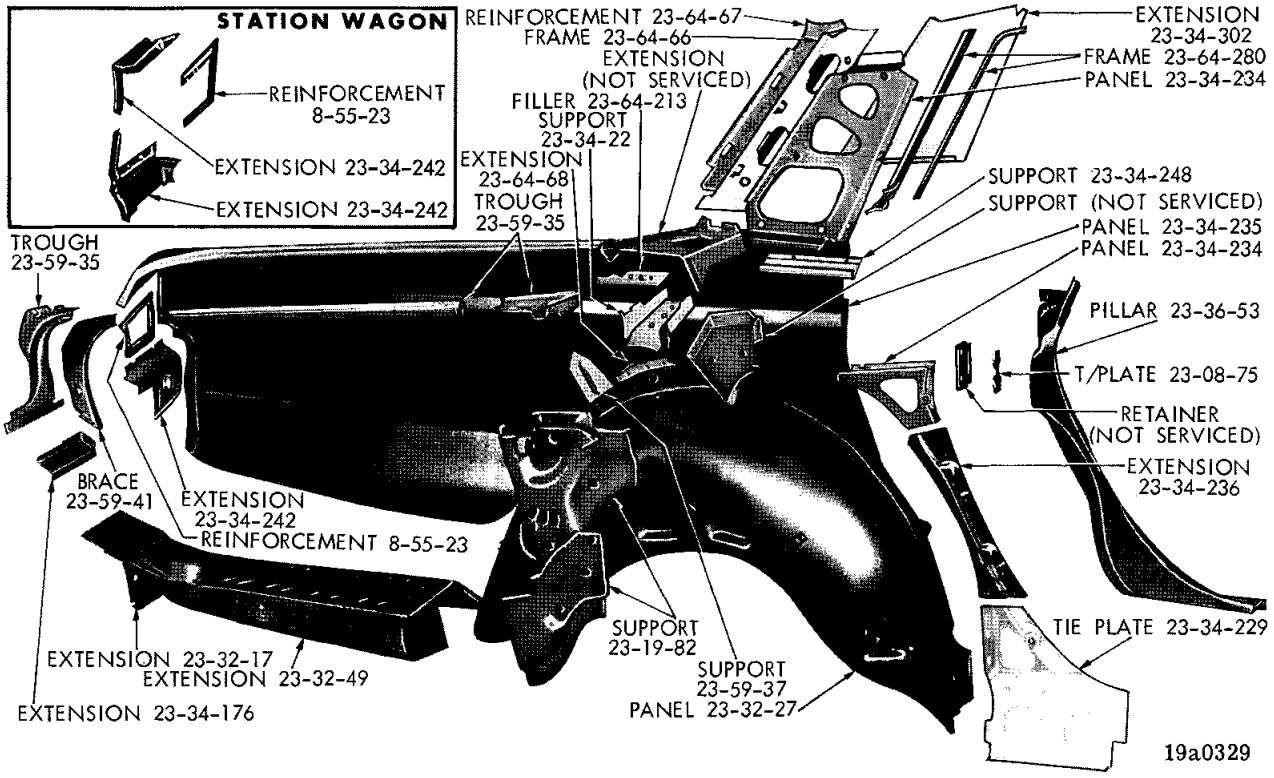

REAR QUARTER PANEL - DODGE 4 DOOR SEDAN

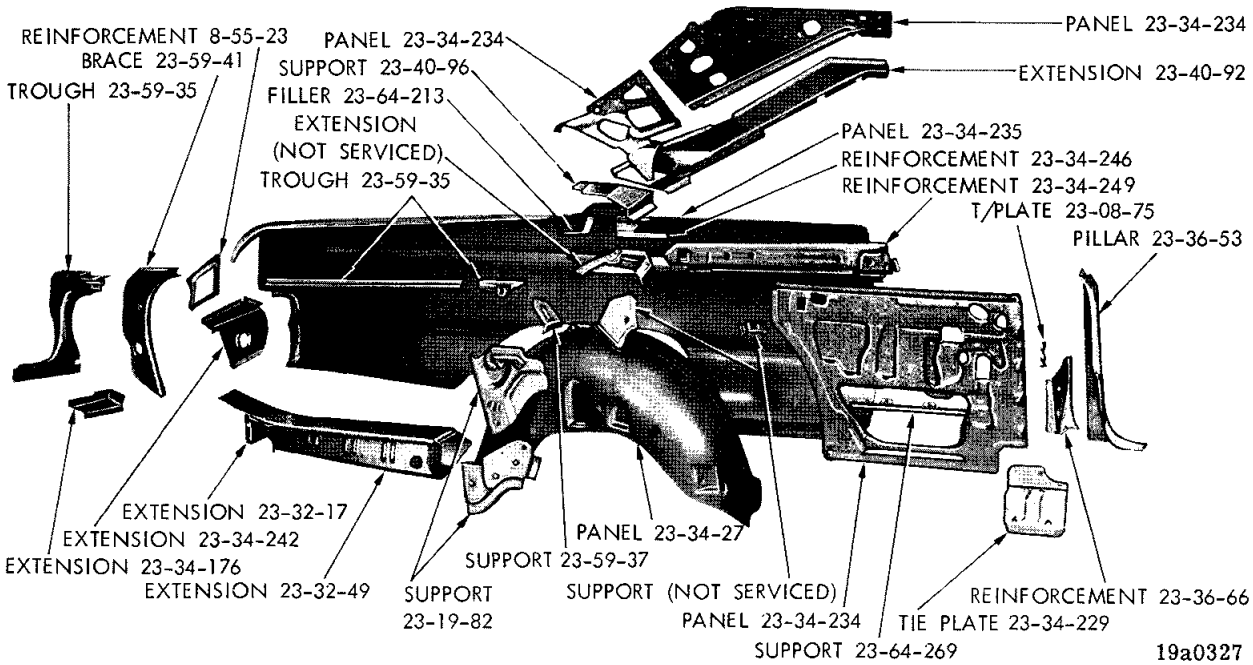

REAR QUARTER PANEL - DODGE 2 DOOR HARDTOP

MyMopar.com

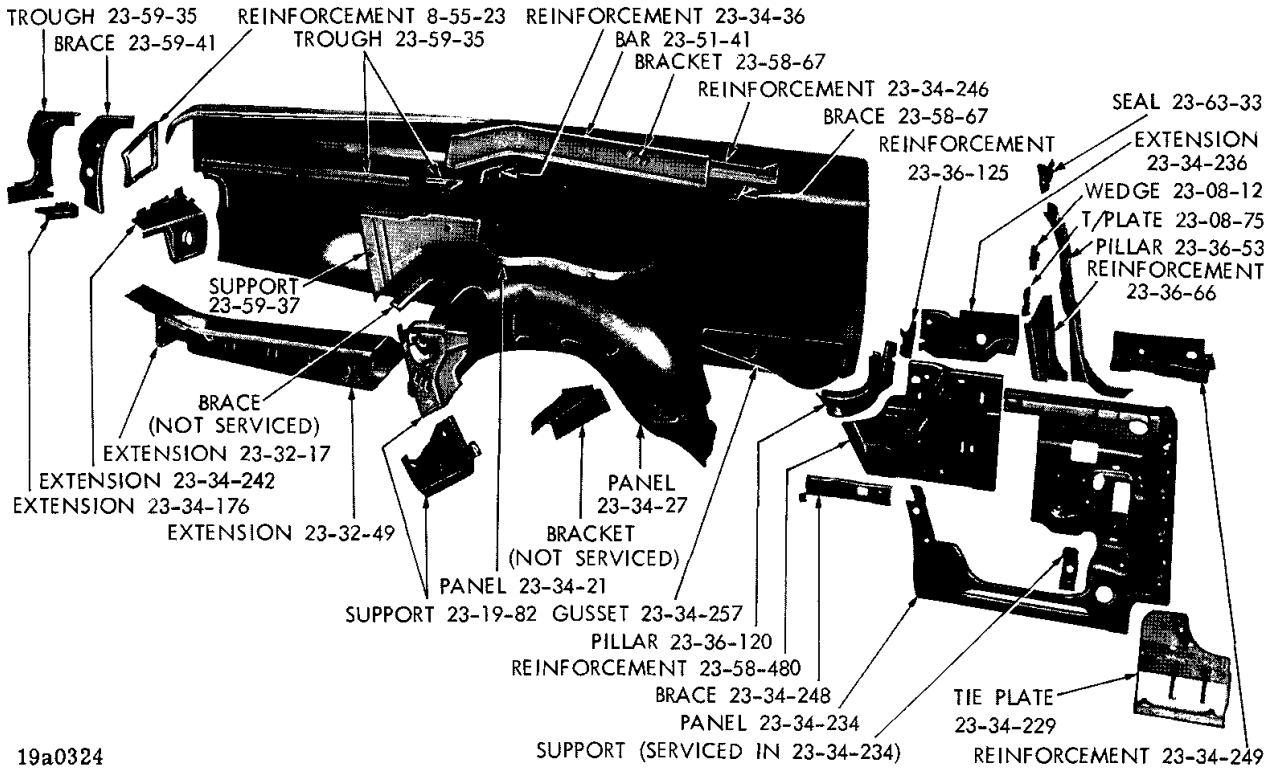

REAR QUARTER PANEL - DODGE CONVERTIBLE COUPE

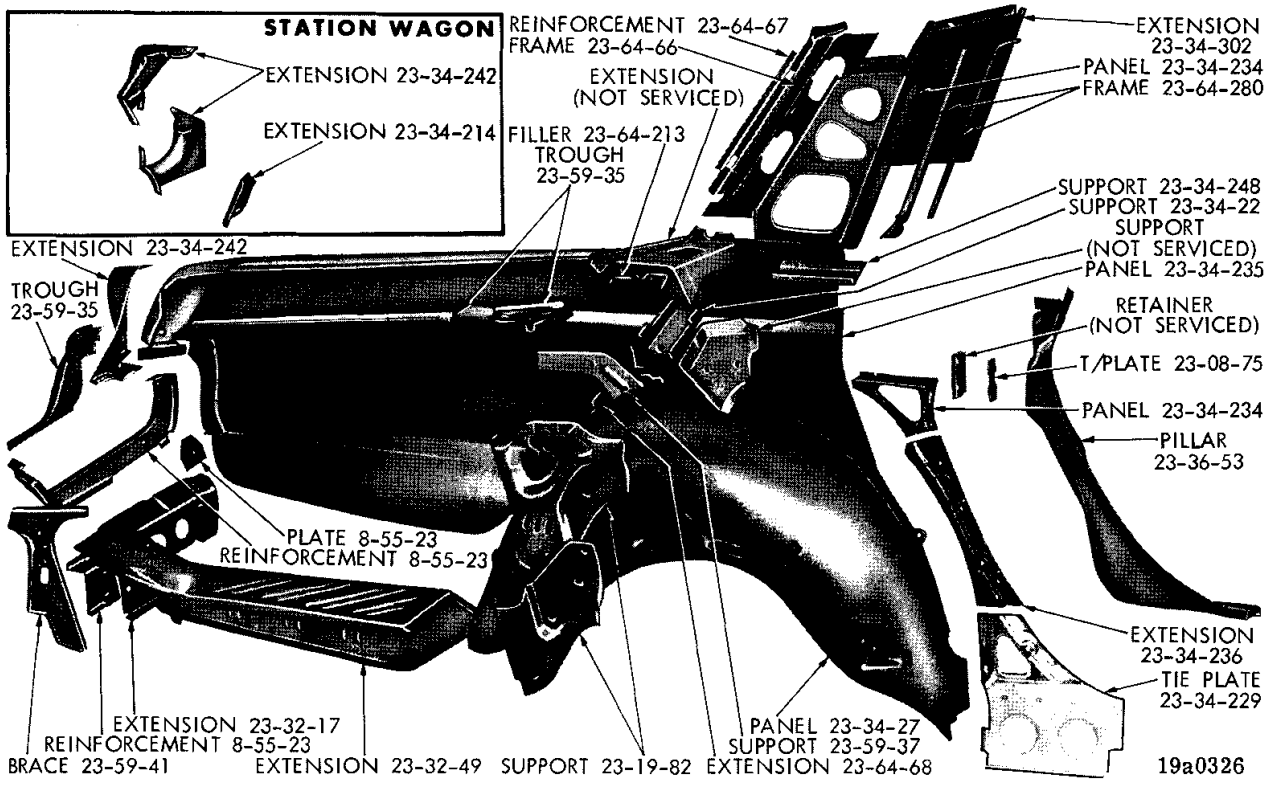

REAR QUARTER PANEL - CHRYSLER 4 DOOR SEDAN AND 4 DOOR HARDTOP

MyMopar.com

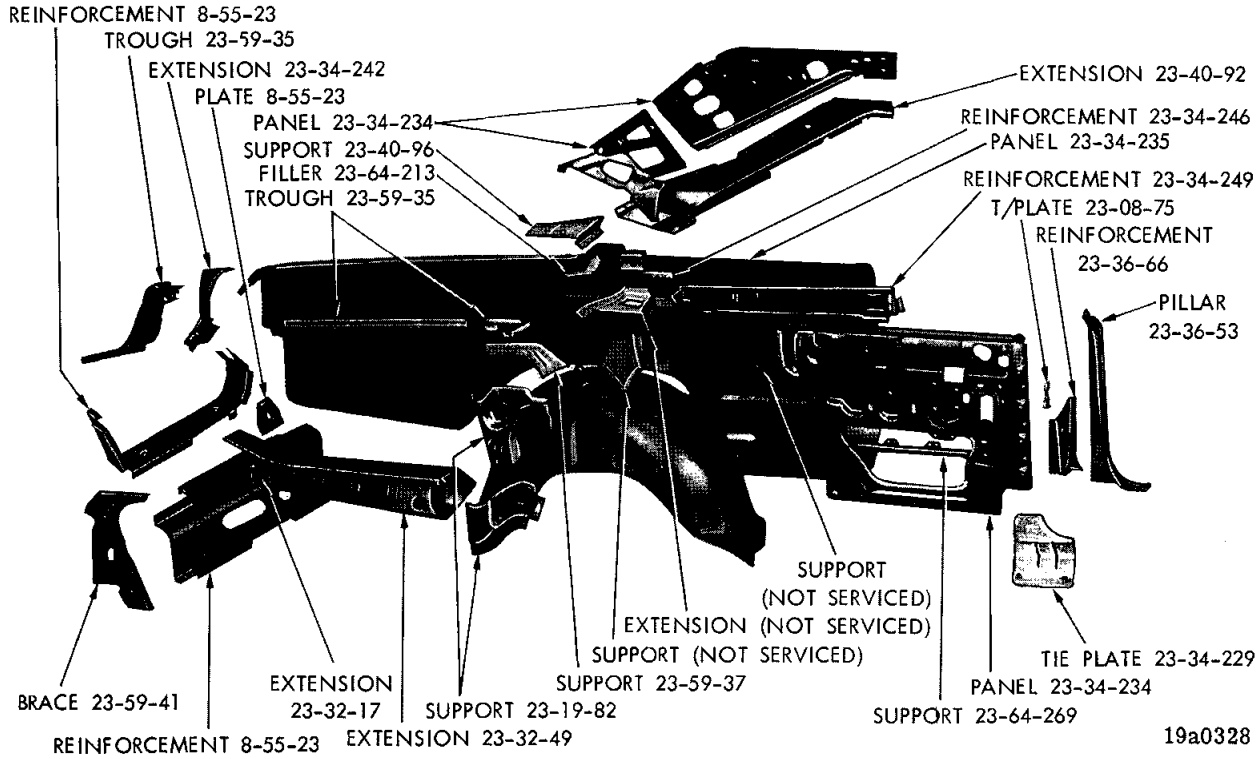

REAR QUARTER PANEL - CHRYSLER 2 DOOR HARDTOP

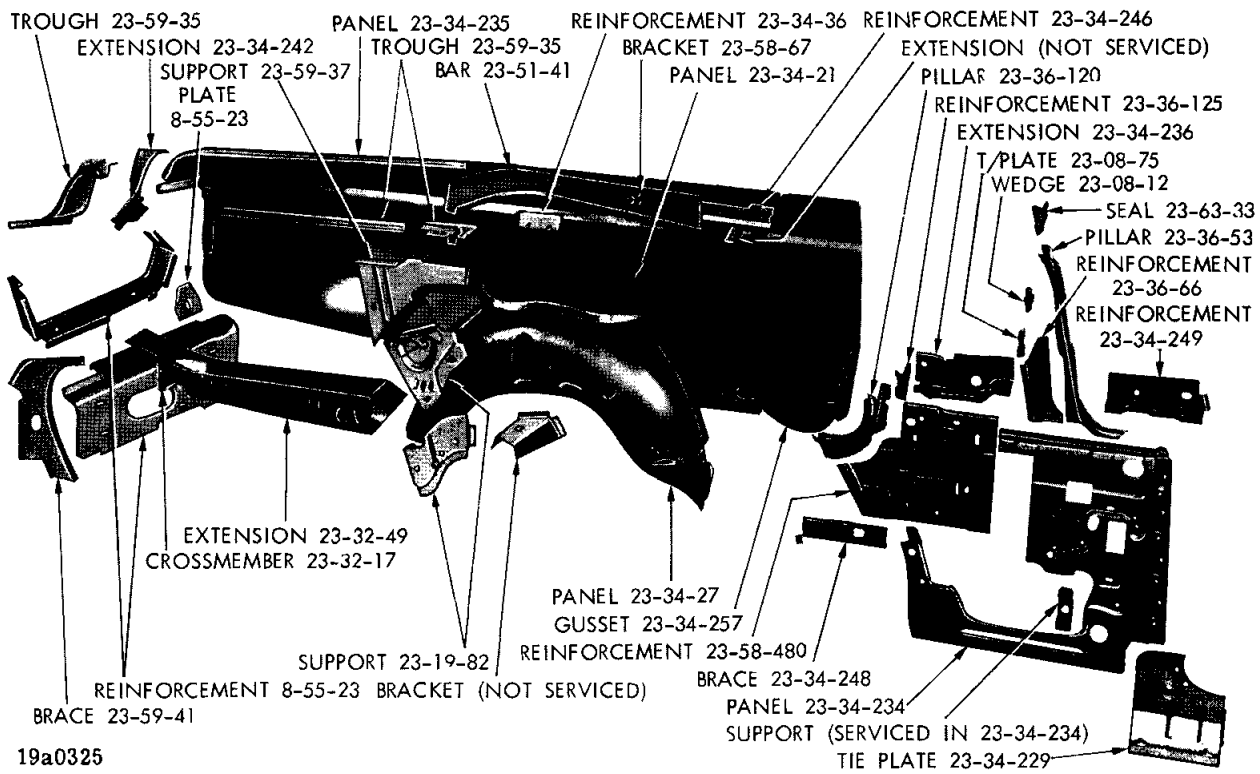

REAR QUARTER PANEL - CHRYSLER CONVERTIBLE COUPE

MyMopar.com

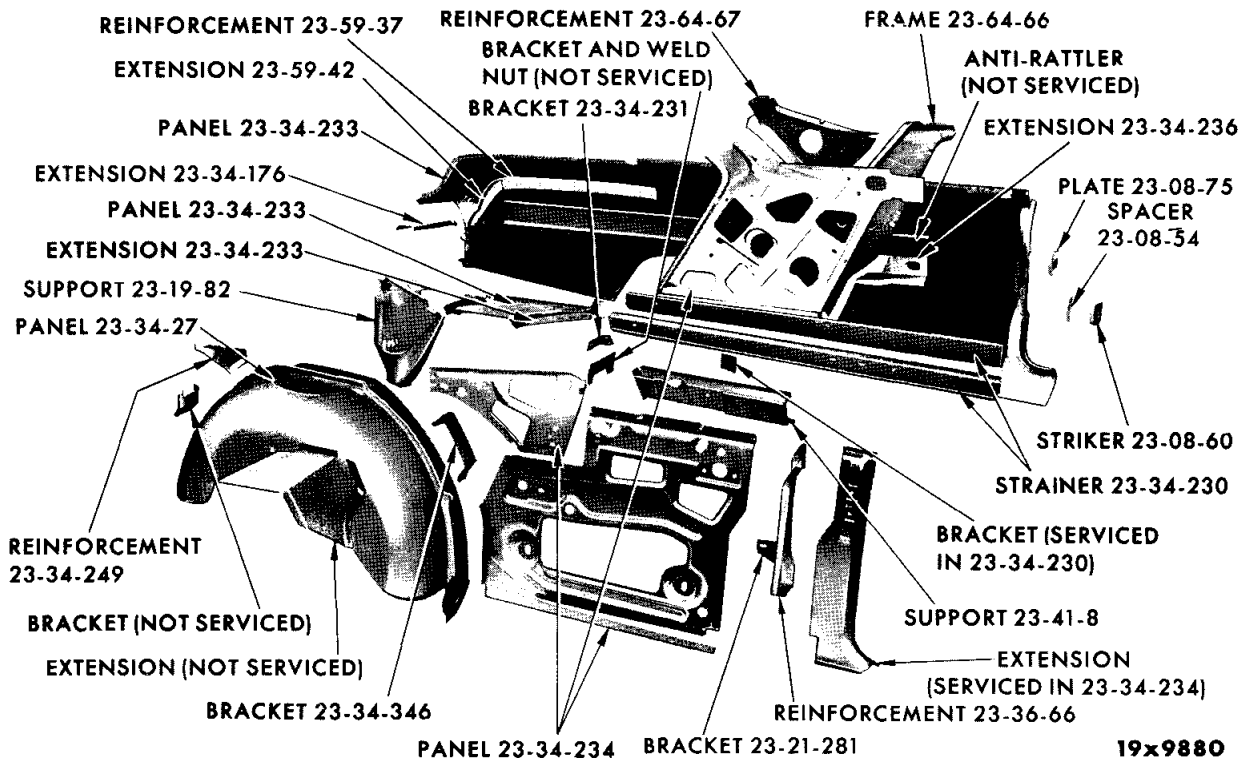

REAR QUARTER PANEL - IMPERIAL 2 DOOR HARDTOP

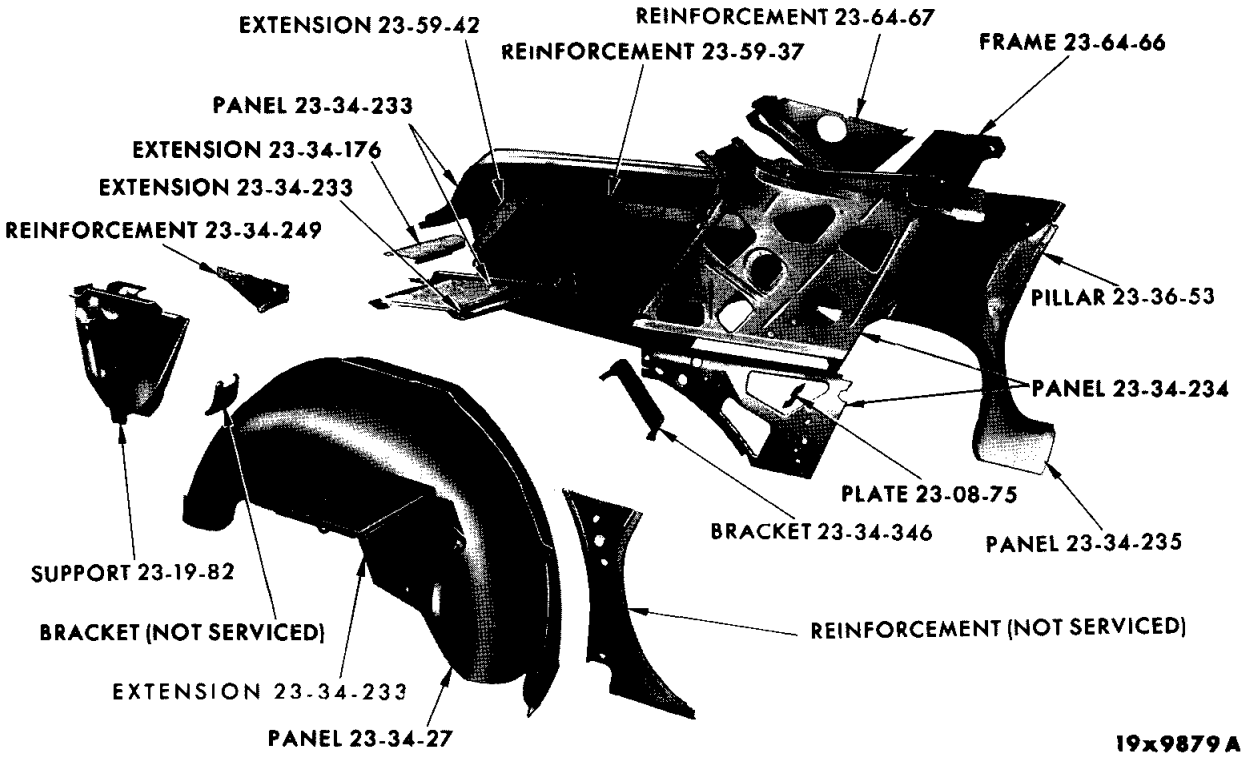

REAR QUARTER PANEL - IMPERIAL Y-M 4 DOOR HARDTOP

MyMopar.com

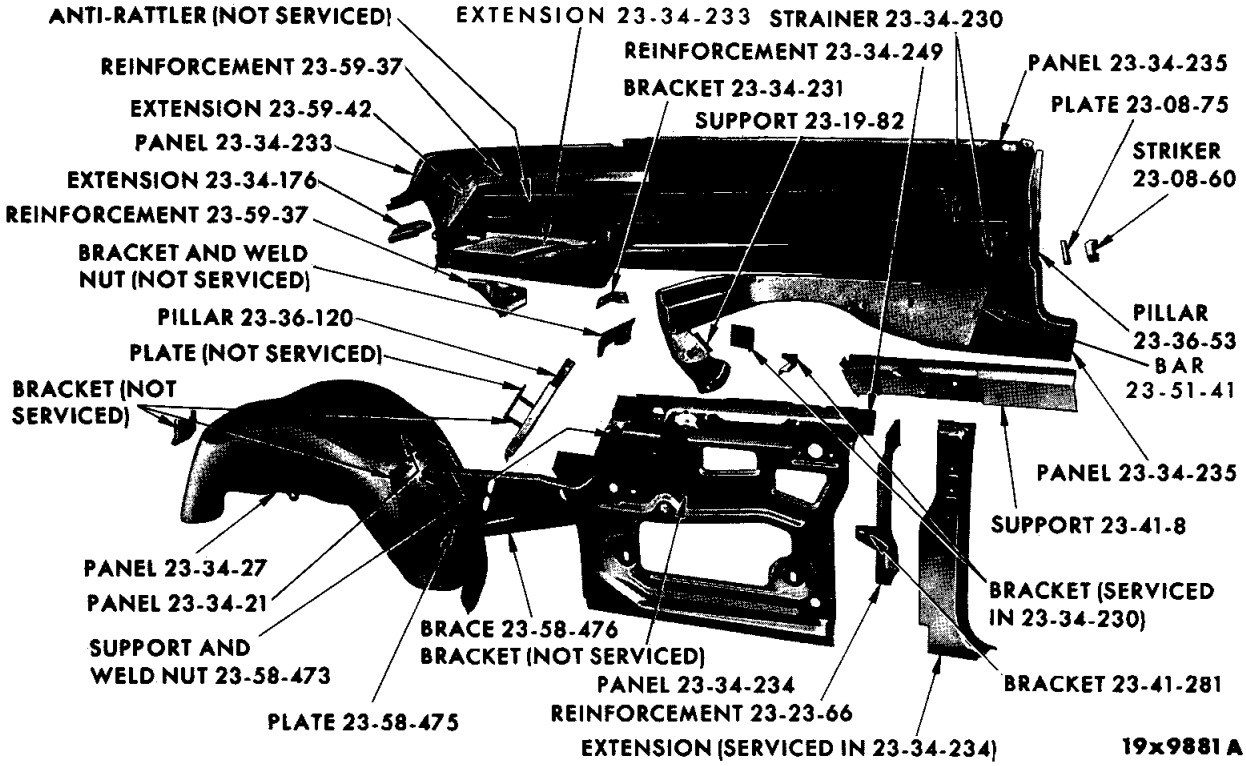

REAR QUARTER PANEL - IMPERIAL CONVERTIBLE COUPE

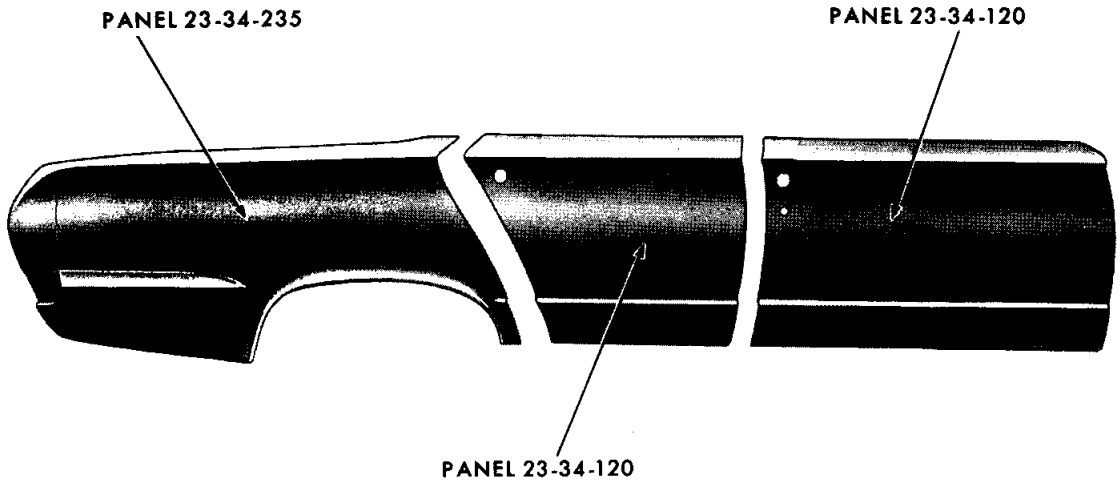

REPAIR PANELS - VALIANT

MyMopar.com

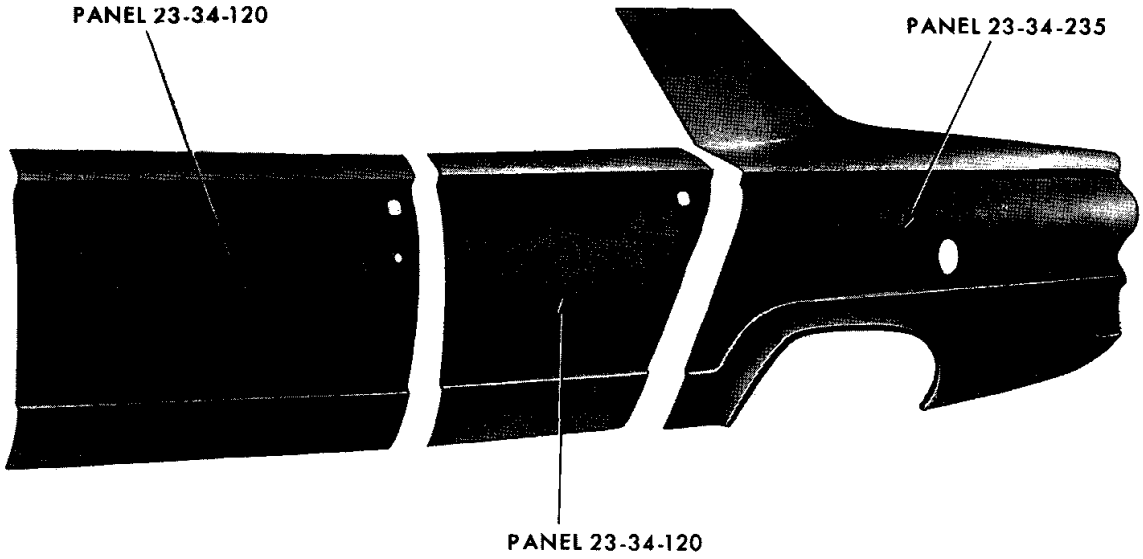

19x9557

REPAIR PANELS - DART

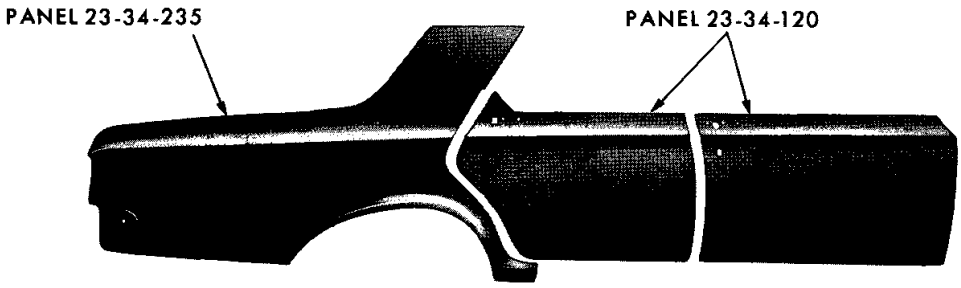

19x9556

REPAIR PANELS - BELVEDERE

MyMopar.com

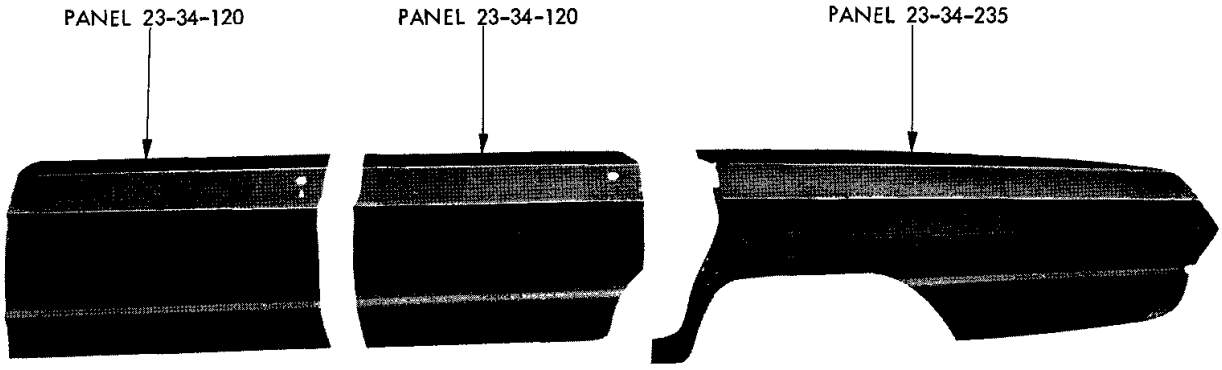

19a0212

REPAIR PANELS - PLYMOUTH

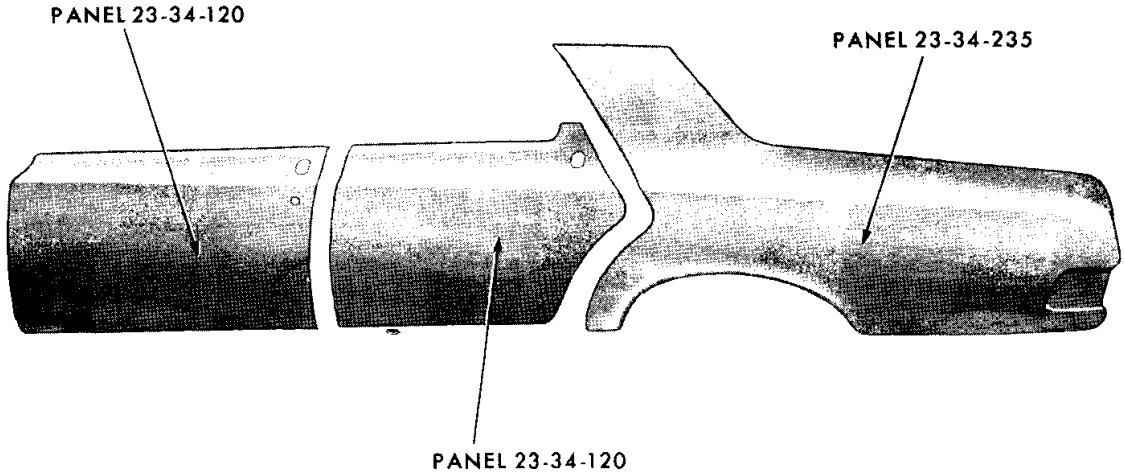

19x9558

REPAIR PANELS - CORONET

MyMopar.com

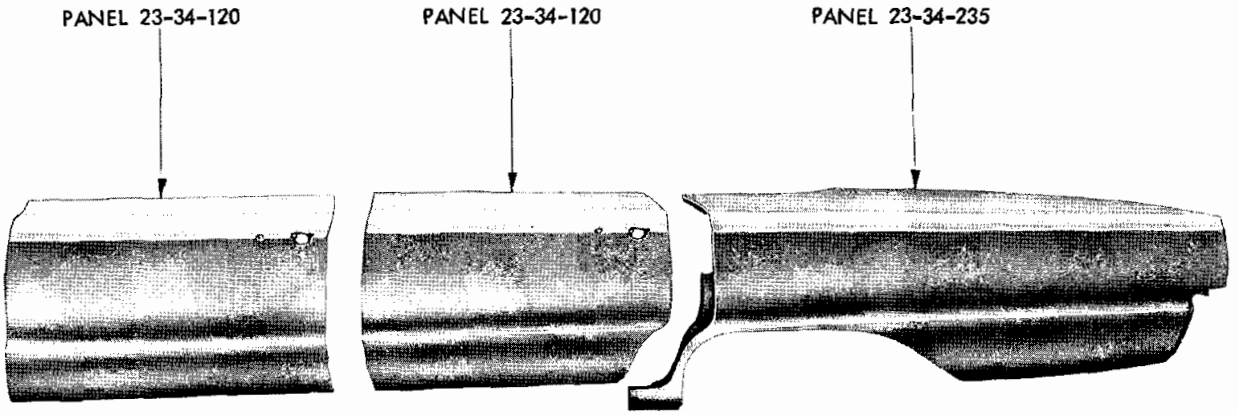

19a0241

REPAIR PANELS - DODGE

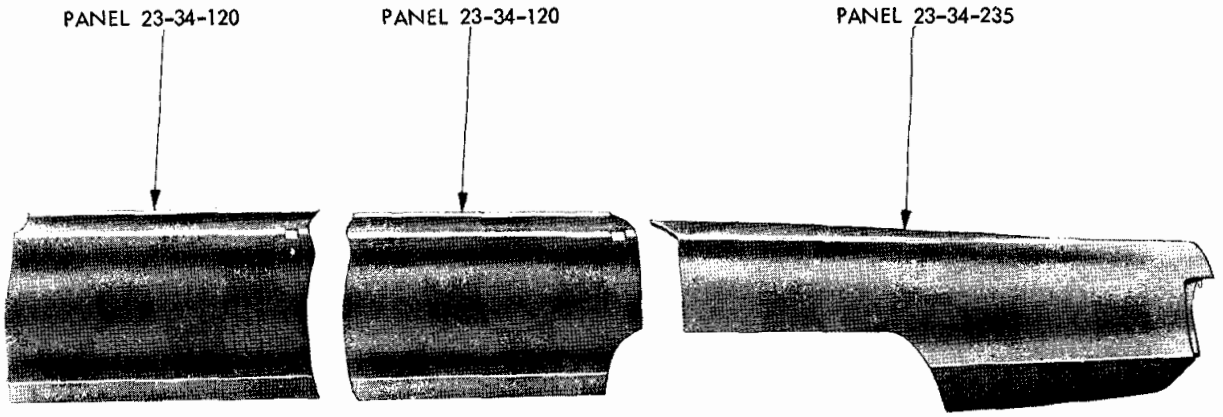

19a0243

REPAIR PANELS - CHRYSLER

MyMopar.com

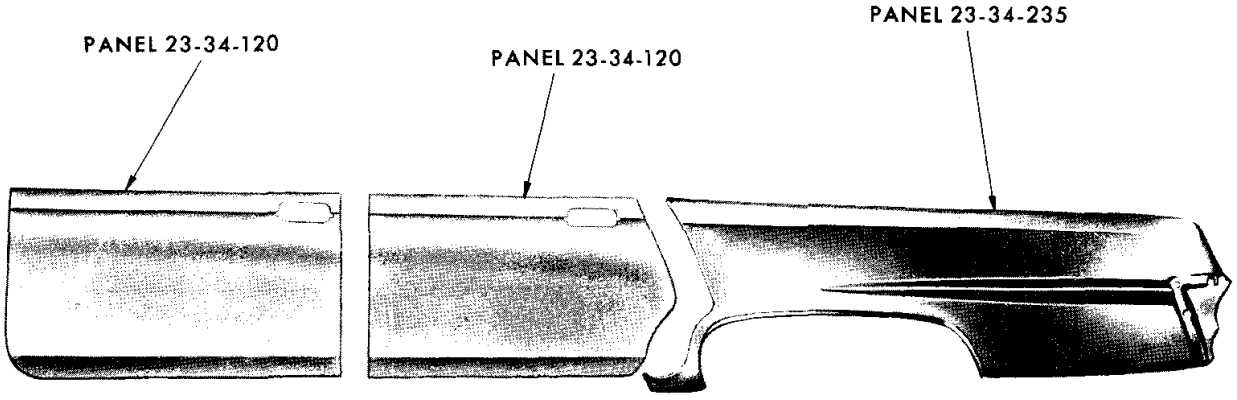

19x9852

REPAIR PANELS - IMPERIAL

NOTES

MyMopar.com

NOTES

MyMopar.com

CODE	PART NAME AND DESCRIPTION	PER CAR	VALIANT / DART	PLYMOUTH BELVEDERE / DODGE CORONET	PLYMOUTH FURY / DODGE POLARA / CHRYSLER	IMPERIAL
23-02-0	**ASH RECEIVER**					
23-02-1	RECEIVER, Front Seat Back Ash					
	C-H Use w/Lighter	1	---- ---	---- ---	2080 181	
	C-H Use w/Bucket Seats	2	---- ---	---- ---	2161 115	
	Complete	2	---- ---	---- ---	2161 119	
	2 D. H. T., C-H Use w/Bench Seats . . .	2	---- ---	---- ---	2572 006	
23-02-2	RETAINER, w/BEZEL, Front Seat Back Ash Receiver					
	C-H Use w/Buckets Seats . .	2	---- ---	---- ---	2080 784	
	2 D. H. T., C-H Use w/Bench Seats	2	---- ---	---- ---	2572 798	
23-02-6	BUMPER, Front Seat Back Ash Receiver					
	C-H Housing	2	---- ---	---- ---	2419 620	
	Spring	★	---- ---	---- ---	2419 621	
23-02-11	HOUSING, Front Seat Back ash Receiver					
	C-H Use w/Lighter	1	---- ---	---- ---	2419 626	
23-02-18	RECEIVER, Instrument Panel Ash					
	V	1	2218 864	2218 995	---- ---	1901 826
	C	2	---- ---	---- ---	2491 628	
	L, P	1	2571 782	---- ---	2570 994	
	D	2	---- ---	---- ---	2571 186	
	C Complete	2	---- ---	---- ---	2571 601	
	BEARING, C	4	---- ---	---- ---	* 169 111	
23-02-19	HOUSING, Instrument Panel Ash Receiver					
	P	1	2292 183	2217 738	2570 135	
	D	1	---- ---	---- ---	2571 057	
23-02-27	RETAINER, Instrument Panel Ash Receiver Compartment Bearing					
	C	1	---- ---	---- ---	2571 503	
23-02-29	STOP, Instrument Panel Ash Receiver					
	P, D	★	2218 847	2217 746	2217 746	
23-02-33	RETAINER, Instrument Panel Ash Receiver Coin					
	C Black	1	---- ---	---- ---	4267 AX9	
23-02-38	BUMPER, Instrument Panel Lower Ash Receiver Upper					
	All	2	---- ---	---- ---	---- ---	2218 683
	All Door	2	---- ---	---- ---	---- ---	2080 480
23-02-40	DOOR, Instrument Panel Ash Receiver					
	C Outer	2	---- ---	---- ---	2571 542	
	All w/Housing	1	---- ---	---- ---	---- ---	2492 816
23-02-43	SPRING, Instrument Panel Ash Receiver					
	C	★	---- ---	---- ---	2571 502	1901 844-5
23-02-50	FINISH PLATE, Instrument Panel Ash Receiver					
	L	1	2571 224			
23-02-62	RECEIVER, Rear Quarter Arm Rest Ash					
	2 D. H. T., 2 D., except C-H	2	2490 462	2490 462	2490 462	
	2 D. H. T., Cv. Cp.	2	---- ---	---- ---	---- ---	2440 270
	2 D. H. T., C-H	2	---- ---	---- ---	2572 006	

TYPE LETTERS Indicate: V - Valiant, L - Dart, R - Belvedere, W - Coronet, P - Plymouth, D - Dodge, C - Chrysler, Y - Imperial

★Indicates use as required.
⊟Indicates parts not listed in any previous parts book.
Right and left part numbers are on same line, first number is right, second number is left.
* Indicates change or addition.

Printed in U.S.A.
Prices and specifications subject to change without notice.
March 1966 Supersedes May 1965.
MyMopar.com

CODE	PART NAME AND DESCRIPTION	PER CAR	VALIANT / DART	PLYMOUTH BELVEDERE / DODGE CORONET	PLYMOUTH FURY / DODGE POLARA / CHRYSLER	IMPERIAL
23-02-0	**ASH RECEIVERS - Cont'd**					
23-02-68	RETAINER and BEZEL, Quarter Arm Rest Ash Receiver					
	2 D. H. T., C-H	2	---- ---	---- ---	*2572 798	
	RETAINERS BEZEL, Rear Door Ash Receiver					
	C-H	2	---- ---	---- ---	*2572 798	
23-02-78	RECEIVER, Rear Door Ash					
	Except C-H	2	*2490 462	*2490 462	*2490 462	*2440 270
	C-H	2	---- ---	---- ---	2572 006	
23-02-79	RECEIVER, Folding Top Pocket Panel Ash, w/LID					
	Cv. Cp.	2	2490 481	2490 462	2490 481	
23-02-82	SPRING, Folding Top Panel Ash Receiver					
	Cv. Cp.	2	2292 503	2499 590	2292 503	
	SPRING, Rear Quarter Arm Rest Ash Receiver					
	2 D. H. T., 2 D., except C-H	2	2499 590	2499 590	2499 590	
	2 D. H. T., Cv. Cp.	2	---- ---	---- ---	---- ---	2572 163
	SPRING, Rear Door Ash Receiver					
	C-L, C-M	2	2499 590	2499 590	2499 590	2572 163
	SPRING, Floor Console Ash Receiver					
	2 D. H. T., Cv. Cp.	1	2292 503			
23-02-84	BUMPER, Rear Door and Quarter Arm Rest Ash Receiver					
	All Front	★	---- ---	---- ---	---- ---	1639 961
	Rear	★	---- ---	---- ---	---- ---	2490 491
23-02-85	LID, Door and Quarter Arm Rest Ash Receiver, w/BRACKET					
	All	★	---- ---	---- ---	---- ---	2581 382-3
23-02-105	RECEIVER, Floor Console Ash					
	All	1	2581 862			
	D-P	1	---- ---	---- ---	2572 583	
23-02-107	BEZEL, Floor Console Ash Receiver Housing					
	D-P	1	---- ---	---- ---	2572 510	
	BEZEL, Folding Top Panel Ash Receiver					
	Cv. Cp.	2	1623 104	---- ---	1623 104	
23-02-110	HOUSING, Flood Console Ash Receiver					
	D-P	1	---- ---	---- ---	2581 722	
23-02-111	LID, Floor Console Ash Receiver Housing					
	D-P	1	---- ---	---- ---	2572 592	
23-02-145	RECEIVER, Third Seat Ash					
	Sta. Wgn., D, C w/Face PLATE	1	---- ---	---- ---	2161 115	
	Complete	1	---- ---	---- ---	2161 119	
23-02-151	RETAINER and BEZEL, Third Seat Ash Receiver					
	Sta. Wgn., D, C	1	---- ---	---- ---	2080 784	
23-04-0	**FLOOR BOARDS**					
23-04-205	MOULDING, Rear Floor Pan Cover Panel					
	V Barracuda Front	1	2527 922			
	Side	1	2527 924-5			

TYPE LETTERS Indicate: V - Valiant, L - Dart, R - Belvedere, W - Coronet, P - Plymouth, D - Dodge, C - Chrysler, Y - Imperial

★Indicates use as required.
⊟Indicates parts not listed in any previous parts book.
May 1965.

Printed in U.S.A.
Prices and specifications subject to change without notice.
Right and left part numbers are on same line, first number is right, second number is left.
* Indicates change or addition.

MyMopar.com

CODE	PART NAME AND DESCRIPTION	PER CAR	VALIANT / DART	PLYMOUTH BELVEDERE / DODGE CORONET	PLYMOUTH FURY / DODGE POLARA / CHRYSLER	IMPERIAL
23-04-0	**FLOOR BOARDS - Cont'd**					
23-04-205	MOULDING - Cont'd					
	Sta. Wgn., 3 Seater Prime	1	---- ---	2254 668		
	SCREW	6	---- ---	6024 848		
	Sta. Wgn., 3 seater Center and Rear, Prime.	1	---- ---	---- ---	2526 642	
	SKID STRIP, Center Floor Pan Third Seat Back					
	Sta. Wgn., 3 Seater	2	---- ---	2251 868		
	MOULDING, Spare Tire Compartment Floor Mat					
	Sta. Wgn. w/3 Screw Holes	1	---- ---	2419 781		
23-04-207	CAP, Rear Floor Pan Cover Panel Moulding					
	V Barracuda	1	2527 936-7			
23-04-229	COVER, Floor Pan Spare Tire, Hard Board					
	Except Barracuda, except Sta. Wgn.	1	2419 361			
	COVER, Spare Tire					
	2 D. H. T., Cv. Cp., R-P, W-P	1	---- ---	2499 300		
	Sta. Wgn.	1	---- ---	4318 TX8		
	PANEL, Spare Tire					
	All	1	---- ---	---- ---	---- ---	1708 248
	WING NUT, Tire Cover	1	* 148 314	---- ---	---- ---	* 148 314
23-04-241	HOUSING, Fuel Tank Filler Tube					
	R, except Sta. Wgn.	1	---- ---	2425 394		
	P, except Sta. Wgn. Upper	1	---- ---	---- ---	2481 956	
	W, P, except Sta. Wgn. Lower	1	---- ---	2244 123	2483 881	
	Sta. Wgn., P	1	---- ---	---- ---	2526 862	
	Sta. Wgn., D	1	---- ---	---- ---	2483 874	
	Sta. Wgn., C	1	---- ---	---- ---	2526 863	
	All	1	---- ---	---- ---	---- ---	2480 577
23-04-249	SEAL, Fuel Tank Filler Tube					
	All	1	2242 359			
23-04-250	RETAINER, Fuel Tank Filler Tube Seal					
	P, except Sta. Wgn.	1	---- ---	---- ---	2483 904	
23-06-0	**GLOVE BOX**					
23-06-4	BOX, Glove					
	P	1	2571 474	---- ---	2571 746	2492 086
	All w/Lens	1	---- ---	2571 287		
	D Use w/Air Conditioning	1	---- ---	⊟2571 286	2587 128	
	D	1	---- ---	---- ---	2571 812	
	C Upper	1	---- ---	---- ---	2571 468	
	Lower	1	---- ---	---- ---	2571 948	
23-06-8	DRAWER, Glove Box Map					
	C	1	---- ---	---- ---	2571 469	
23-06-9	RETAINER, Instrument Panel Glove Box Tissue Container					
	C	1	---- ---	---- ---	*2571 647	
23-06-10	DOOR, Glove Box					
	R-L, P	1	2587 275	2571 897	2492 996	
	W, D	1	---- ---	2571 897	2492 901	
	R-H, R-P	1	---- ---	2571 896		
	C Prime, Inner	1	---- ---	---- ---	2491 619	2217 791
	Outer	1	---- ---	---- ---	2571 078	
	Y-M, except 2 D. H. T. Outer	1	---- ---	---- ---	---- ---	2570 128
	Y-H Outer	1	---- ---	---- ---	---- ---	2571 455
	2 D. H. T., Y-M Outer	1	---- ---	---- ---	---- ---	2571 455

TYPE LETTERS Indicate: V - Valiant, L - Dart, R - Belvedere, W - Coronet, P - Plymouth, D - Dodge, C - Chrysler, Y - Imperial

★Indicates use as required.
⊟Indicates parts not listed in any previous parts book.
Right and left part numbers are on same line, first number is right, second number is left.
* Indicates change or addition.

Printed in U.S.A.
Prices and specifications subject to change without notice.
March 1966 Supersedes May 1965.

MyMopar.com

CODE	PART NAME AND DESCRIPTION	PER CAR	VALIANT / DART	PLYMOUTH BELVEDERE / DODGE CORONET	PLYMOUTH FURY / DODGE POLARA / CHRYSLER	IMPERIAL
23-06-0	**GLOVE BOX - Cont'd**					
23-06-11	SHELF, Instrument Panel Glove Box Tissue					
	C	1	---- ---	---- ---	2631 872	
23-06-13	ARM, Glove Box Door Check					
	P	1	---- ---	---- ---	2570 004	
23-06-14	BUMPER, Glove Box					
	C Hinge	2	2292 257	2292 257	2292 257	
	P, D Door	2	1698 868	2080 201	2080 201	2080 480
23-06-15	CATCH, Glove Box Door Lock					
	P	1	---- ---	2162 692	2492 999	2492 716
	D	1	---- ---	---- ---	2571 949	
	PLATE, Glove Box Door Lock Striker					
	C	1	---- ---	---- ---	2571 648	
23-06-17	FINISH PLATE, Glove Box Door					
	V-H, V-P	1	2492 993			
	L-H, L-P	1	2492 992			
	W-H, W-P, P-P	1	---- ---	2571 308	2571 972	
	NUT	★	---- ---	9415 312		
	P-H	1	---- ---	---- ---	2588 006	
	C-M, C-P	1	---- ---	---- ---	2571 158	
	C-H	1	---- ---	---- ---	2571 164	
23-06-21	HINGE, Glove Box Door					
	P	★	2292 246-7	2491 004-5	2492 965	
	D	1	---- ---	---- ---	2492 902-3	
	C	1	---- ---	---- ---	2491 786-7	2217 784-5
23-06-22	SPRING, Glove Box Door					
	All Hinge	1	2217 175	2492 831	---- ---	2492 171
	D Hinge	1	---- ---	---- ---	2661 091	
	C Hinge	2	---- ---	---- ---	*2571 914	
	All Release	2	---- ---	---- ---	---- ---	*2771 660
	SCREW	1	---- ---	---- ---	---- ---	* 443 716
23-06-23	HOUSING, Glove Box Map Drawer					
	C	1	---- ---	---- ---	2571 947	
23-06-25	HANDLE or KNOB, Glove Box Door					
	V Use w/Lock	1	2571 627			
	Use w/o Lock	1	2571 628			
	L	1	2571 197			
	SCREW	2	456 867			
23-06-28	CYLINDER and KEYS, Glove Box Door Lock					
	P, D	1	---- ---	*1830 415	*1830 415	*2499 377
	C	1	---- ---	---- ---	*2520 927	
	CYLINDER and KEY, Glove Box Lock					
	Cv. Cp., V	1	⊟2583 167			
	CYLINDER, KEY and KNOB PACKAGE, Glove Box Lock					
	V except Cv. Cp.	1	*2585 844			
	Consists of:					
	1 - ---- --- Cylinder and Key					
	1 - 2571 627 Knob					
	1 - 2520 874 Lever					
	1 - 6025 195 Screw and Lock Washer					
	1 - 6025 196 Nut					
	1 - 6025 197 Washer					

TYPE LETTERS Indicate: V - Valiant, L - Dart, R - Belvedere, W - Coronet, P - Plymouth, D - Dodge, C - Chrysler, Y - Imperial

★Indicates use as required.
⊟Indicates parts not listed in any previous parts book.

Prices and specifications subject to change without notice.
Right and left part numbers are on same line, first number is right, second number is left.
* Indicates change or addition.

Printed in U.S.A.

MyMopar.com

CODE	PART NAME AND DESCRIPTION	PER CAR	VALIANT / DART	PLYMOUTH BELVEDERE / DODGE CORONET	PLYMOUTH FURY / DODGE POLARA / CHRYSLER	IMPERIAL
23-06-0	**GLOVE BOX - Cont'd**					
23-06-35	SPACER, Instrument Panel Glove Box Door Lock Indexing					
	V	1	2661 578			
23-06-37	LEVER, Glove Box Lock Cylinder					
	V	1	2520 874			
23-06-41	GROMMET, Glove Box Door Check Arm					
	All	2	---- ---	---- ---	---- ---	2080 488
23-06-42	MEDALLION, Glove Box Door					
	C-M, C-P w/300	1	---- ---	---- ---	2571 425	
	NUT	2	---- ---	---- ---	6022 297	
23-06-49	MOULDING, Glove Box Door					
	D	1	---- ---	---- ---	2571 067	
	C	1	---- ---	---- ---	2491 625	
	NUT	3	---- ---	---- ---	1839 995	
23-06-53	NAME PLATE, Glove Box Door					
	R-H Belvedere	1	---- ---	2571 730		
	P-M FURY 11	1	---- ---	---- ---	2571 728	
	P-H FURY 111	1	---- ---	---- ---	2571 729	
	D-L Polara	1	---- ---	---- ---	2587 113	
	D-L "500"	1	---- ---	---- ---	2631 961	
	D-P Monaco	1	---- ---	---- ---	2587 139	
	D-H Custom 880	1	---- ---	---- ---	*2631 469	
	C-L NEWPORT	1	---- ---	---- ---	2571 594	
	C-H New Yorker	1	---- ---	---- ---	2571 615	
	NUT C	2	---- ---	---- ---	6022 297	
	2 D. H. T., Y-M Crown Coupe	1	---- ---	---- ---	---- ---	2492 247
	4 D. H. T., Cv. Cp., Y-M IMPERIAL Crown . . .	1	---- ---	---- ---	---- ---	2492 918
	Y-H LeBaron	1	---- ---	---- ---	---- ---	2571 624
23-06-54	NUT, Glove Box Door Name Plate Attaching					
	P-H, C-L, C-H	2	---- ---	---- ---	1839 995	
	Cv. Cp., 4 D. H. T., Y-M	2	---- ---	---- ---	---- ---	1839 995
	NUT, Instrument Panel Glove Box Door Face Plate					
	P-H, P-P	8	---- ---	---- ---	1839 995	
23-06-55	BEZEL, Glove Box Door					
	P-H, P-P	1	---- ---	---- ---	2571 971	
23-06-68	RETAINER, Glove Box Door Hinge Rivet					
	All	2	6008 041	6008 041	6008 041	
23-07-0	**BRACKETS AND REINFORCEMENTS**					
23-07-169	BRACKET, Instrument Panel to Cowl Side					
	C	1	---- ---	---- ---	2492 696-7	
	BRACKET, Instrument Panel Lower Reinforcement to Pillar					
	All	1	---- ---	---- ---	---- ---	2080 652-3
23-08-0	**BUMPERS AND STRIKERS**					
23-08-12	BUMPER or WEDGE, Door					
	Cv. Cp. Door	2	2428 191			
	Body	2	---- ---	1544 841	2520 004	
	All	★	2255 231	2255 231	2255 231	2255 231
	2 D. H. T. Cv. Cp. Body	2	---- ---	---- ---	---- ---	2520 004

TYPE LETTERS Indicate: V - Valiant, L - Dart, R - Belvedere, W - Coronet, P - Plymouth, D - Dodge, C - Chrysler, Y - Imperial

★Indicates use as required.
⊟Indicates parts not listed in any previous parts book.
Right and left part numbers are on same line, first number is right, second number is left.
• Indicates change or addition.

Printed in U.S.A.
Prices and specifications subject to change without notice.
March 1966 Supersedes May 1965.

MyMopar.com

CODE	PART NAME AND DESCRIPTION	PER CAR	VALIANT / DART	PLYMOUTH BELVEDERE / DODGE CORONET	PLYMOUTH FURY / DODGE POLARA / CHRYSLER	IMPERIAL
23-08-0	**BUMPERS AND STRIKERS - Cont'd**					
23-08-12	BUMPER or WEDGE - Cont'd					
	4 D. H. T. On Front Lower Center Pillar	1	---- ---	---- ---	---- ---	2572 892-3
	SCREW	4	---- ---	---- ---	---- ---	9416 049
23-08-12	STRIKER, Front Door Sliding Wedge					
	Cv. Cp. Except C-H	2	---- ---	989 513	989 513	989 513
	2 D. H. T.	2	---- ---	---- ---	---- ---	989 513
	SPACER, Door Lock Striker					
	All Thick	★	2486 279	2486 279	2486 279	2486 279
	Thin	★	2486 280	2486 280	2486 280	2486 280
23-08-60	STRIKER, Door Sliding Wedge					
	Cv. Cp.	1	2520 692-3			
	STRIKER, Door Lock					
	All	★	2486 178-9	2486 178-9	2486 178-9	2486 178-9
23-08-75	PLATE, Door Lock Striker Tapping					
	All	★	2218 956	2218 956	2218 956	2218 956
23-09-0	**GLASS CHANNELS**					
23-09-9	BRACKET, Quarter Window Glass Lift					
	2 D., P	★	2217 369	---- ---	⊟2603 064	
	RIVET	★	6023 546	---- ---	6023 546	
	CHANNEL, Quarter Window Glass Lower					
	Cv. Cp	1	2422 422-3	2244 902-3		
	2 D. H. T., L, C-L, C-M, C-P	1	2245 092-3	2481 602-3	2526 616-7	
	V Barracuda	1	2602 448-9			
	2 D.	1	---- ---	2245 002-3		
	2 D. H. T., Cv. Cp.	1	---- ---	---- ---	---- ---	2424 708-9
23-09-17	SLIDE, Quarter Window Glass Lower Channel Bracket 2 D. H. T., V Barracuda	2	2423 789			
23-09-27	CAP, Door and Quarter Window Glass Lower Channel Regulator Roller Slot					
	4 D. H. T., 2 D. H. T., Cv. Cp.	★	---- ---	2218 301	2218 301	2218 301
23-09-35	CHANNEL, Quarter Window Glass Run, w/BRACKET					
	2 D. Front	1	2216 506			
	2 D., L Rear	1	2255 542-3			
	Cv. Cp.	1	2424 970-1			
23-09-37	SUPPORT, Quarter Window Glass Rear Run Channel					
	2 D. H. T., L	2	2243 035			
23-09-47	SUPPORT, Door Glass Rear Run Channel					
	2 D. H. T., Cv. Cp. Front, Upper	2	---- ---	2216 485		
	Lower	2	---- ---	2216 111		
	2 D., 2 D. H. T., Cv. Cp.	2	---- ---	---- ---	*2491 407	
23-09-51	CHANNEL, Front Door Window Glass Rear Run					
	2 D., P	★	2216 506	---- ---	2570 172-3	
	4 D., Sta. Wgn.	★	2216 506	---- ---	2570 158-9	
	4 D. H. T.	1	---- ---	---- ---	2491 398-9	
	2 D. H. T., Cv. Cp.	1	2217 530-1	2166 936-7	2570 166-7	
	TRACK, Front Door Window Glass Guide Rear	2	---- ---	---- ---	---- ---	2491 530

TYPE LETTERS Indicate: V - Valiant, L - Dart, R - Belvedere, W - Coronet, P - Plymouth, D - Dodge, C - Chrysler, Y - Imperial

★Indicates use as required.
⊟Indicates parts not listed in any previous parts book.
March 1966 Supersedes May 1965.

Printed in U.S.A.
Prices and specifications subject to change without notice.

Right and left part numbers are on same line, first number is right, second number is left.

MyMopar.com

* Indicates change or addition.

CODE	PART NAME AND DESCRIPTION	PER CAR	VALIANT / DART	PLYMOUTH BELVEDERE / DODGE CORONET	PLYMOUTH FURY / DODGE POLARA / CHRYSLER	IMPERIAL
23-09-0	**GLASS CHANNELS - Cont'd**					
23-09-52	BRACKET, Front Door Glass Lift					
	4 D., 2 D., Sta. Wgn.	2	2217 369			
	RIVET	2	6023 546			
	2 D. H. T., Cv. Cp.	2	2217 429			
	RIVET	2	6023 546			
	RIVET	2	---- ---	---- ---	6023 546	
	CHANNEL, Front Door Glass Lower					
	4 D., Sta. Wgn.	1	---- ---	2167 780-1		
	2 D.	1	---- ---	2166 916-7		
	4 D. H. T.	1	---- ---	---- ---	---- ---	2217 974-5
	2 D. H. T., Cv. Cp.	1	---- ---	---- ---	---- ---	2491 054-5
23-09-53	SPACER, Quarter Window Glass Lower Channel					
	2 D. H. T.	4	2216 544	2216 544		
23-09-54	GASKET, Door Window Glass Lift Bracket					
	All Front	2	2217 351	---- ---	2520 463	
	Rear	2	2217 351	---- ---	2570 122	
	GASKET, Quarter Window Glass Lift Bracket					
	2 D., P	★	2217 351	---- ---	2484 929	
23-09-56	CHANNEL, Rear Door Window Glass Run					
	4 D., Sta. Wgn. Front	1	2216 818-9			
	Rear	2	2216 844			
	TRACK w/STUD and PLATE, Rear Door Window Glass Guide Rear					
	4 D. H. T.	1	---- ---	---- ---	---- ---	*2491 574-5
23-09-58	BRACKET, Rear Door Glass Lift					
	All	2	2217 369			
	RIVET	2	6023 546			
	CHANNEL, Rear Door Glass Lower					
	Except 4 D. H. T.	1	---- ---	*2421 215-6	⊟2491 506-7	
	RIVET	4	---- ---	---- ---	6023 546	
	4 D. H. T.	1	---- ---	---- ---	---- ---	2491 720-1
23-09-61	GROMMET, Quarter Window Glass Lower Channel					
	2 D. H. T.	8	2216 546			
23-09-64	CHANNEL, Tailgate Glass Lower					
	Sta. Wgn.	1	2423 575	2217 511	2484 343	
	SCREW	★	133 781			
	SPACER	4	---- ---	---- ---	2167 856	
	WASHER, Steel	4	---- ---	---- ---	2423 534	
	WASHER, Rubber	4	---- ---	---- ---	2423 535	
	SCREW	4	---- ---	---- ---	120 585	
	RIVET	2	---- ---	6023 695		
23-09-67	CHANNEL, Tailgate Glass Run					
	Sta. Wgn. Upper	1	2244 889	2480 975		
	Side Upper	1	2480 274-5	2251 772-3	484 288-9	
	Side Lower	1	2423 492-3	2252 152-3		
	Sta. Wgn., includes RUN					
	Side Lower	1	---- ---	---- ---	2528 436-7	

TYPE LETTERS Indicate: V - Valiant, L - Dart, R - Belvedere, W - Coronet, P - Plymouth, D - Dodge, C - Chrysler, Y - Imperial

★Indicates use as required.
⊟Indicates parts not listed in any previous parts book.
Right and left part numbers are on same line, first number is right, second number is left.
* Indicates change or addition.

Printed in U.S.A.
Prices and specifications subject to change without notice.
March 1966 Supersedes May 1965.

MyMopar.com

CODE	PART NAME AND DESCRIPTION	PER CAR	VALIANT / DART	PLYMOUTH BELVEDERE / DODGE CORONET	PLYMOUTH FURY / DODGE POLARA / CHRYSLER	IMPERIAL
23-09-0	**GLASS CHANNELS - Cont'd**					
23-09-75	CHANNEL, Quarter Window Rear Guide					
	2 D. H. T., V	1	2244 192-3			
	2 D. H. T., L	1	2255 414-5			
	V Barracuda	1	2573 114-5			
23-10-0	**DOOR CHECK**					
23-10-1	ARM, Door Hinge Check					
	All Lower, Front	2	---- ---	---- ---	2520 012	
	Rear	2	---- ---	---- ---	2486 663	
	4 D. H. T. Rear	2	---- ---	---- ---	---- ---	1860 829
	PIN	2	---- ---	---- ---	---- ---	6000 130
23-10-2	BRACKET, Rear Door Check Arm					
	All	2	---- ---	---- ---	---- ---	1750 686
23-10-9	SPACER, Front Door Lower Hinge Check Arm					
	All	4	---- ---	---- ---	2520 013	
23-10-11	ROLLER, Door Lower Hinge Check Arm					
	All Front	2	---- ---	---- ---	2520 014	
	Rear	2	---- ---	---- ---	2486 668	
23-10-17	GUIDE, Rear Door Check Arm					
	All	2	---- ---	---- ---	---- ---	1758 076
23-10-18	SPRING, Door Lower Hinge Check Arm Tension					
	All Front	2	---- ---	---- ---	2520 009	
	Rear	2	---- ---	---- ---	2486 669	
	SPRING, Front Door Check Arm Tension					
	All	2	---- ---	---- ---	---- ---	1691 275
23-11-0	**DOORS**					
23-11-1	SHELL, Front Door					
	4 D., Sta. Wgn., P	1	2576 060-1	2425 766-7	2493 430-1	
	2 D. H. T., Cv. Cp., P	1	2576 064-5	2425 772-3	2493 692-3	
	2 D., P	1	2576 062-3	2425 770-1	2493 686-7	
	2 D., use with 426 cu. in. Hemispherical Eng.					
	Right	1	---- ---	2416 889		
	Left	1	---- ---	2416 890		
	4 D. H. T., P	1	---- ---	---- ---	2493 332-3	
	4 D. H. T., D	1	---- ---	---- ---	2493 472-3	
	4 D. H. T., C	1	---- ---	---- ---	2493 130-1	2576 042-3
	4 D., Sta. Wgn., D	1	---- ---	---- ---	2493 478-9	
	2 D. H. T., Cv. Cp., D	1	---- ---	---- ---	2493 638-9	
	4 D., Sta. Wgn., C	1	---- ---	---- ---	2493 466-7	
	2 D. H. T., Cv. Cp., C	1	---- ---	---- ---	2493 598-9	2576 038-9
23-11-3	SHELL, Rear Door					
	4 D., P	1	2576 100-1	2425 796-7	2493 592-3	
	4 D., D	1	---- ---	---- ---	2493 436-7	
	4 D., C	1	---- ---	---- ---	2493 424-5	
	4 D. H. T., P	1	---- ---	---- ---	2493 364-5	
	4 D. H. T., D	1	---- ---	---- ---	2493 418-9	
	4 D. H. T., C	1	---- ---	---- ---	2493 110-1	2425 634-5
	Sta. Wgn., P	1	2576 100-1	2425 796-7	2493 698-9	
	Sta. Wgn., D	1	---- ---	---- ---	2493 650-1	
	Sta. Wgn., C	1	---- ---	---- ---	2493 704-5	

TYPE LETTERS Indicate: V - Valiant, L - Dart, R - Belvedere, W - Coronet, P - Plymouth, D - Dodge, C - Chrysler, Y - Imperial

★Indicates use as required.
⊟Indicates parts not listed in any previous parts book.
March 1966 Supersedes May 1965.

Printed in U.S.A.
Prices and specifications subject to change without notice.
Right and left part numbers are on same line, first number is right, second number is left.
* Indicates change or addition.

MyMopar.com

CODE	PART NAME AND DESCRIPTION	PER CAR	VALIANT / DART	PLYMOUTH BELVEDERE / DODGE CORONET	PLYMOUTH FURY / DODGE POLARA / CHRYSLER	IMPERIAL
23-11-0	**DOORS - Cont'd**					
23-11-10	OVERLAY, Door Finish Panel Sta. Wgn., D-H	★	---- ---	---- ---	⊟2784 148	
23-11-23	ORNAMENT and WEATHERSTRIP, Rear Door Belt Rear (1)					
23-11-30	SEAL, Rear Door Ornament 4 D. H. T., D, C	1	---- ---	---- ---	2570 098-9	
23-14-0	**DOOR REGULATOR AND REMOTE CONTROL HANDLES**					
23-14-10	HANDLE, Door Outside					
	P, D Front	1	2242 848-9	2167 408-9	2486 704-5	2428 448-9
	P Rear	1	2242 988-9	2167 408-9	2486 730-1	2428 450-1
	D-L Rear	1	---- ---	---- ---	2486 740-1	
	4 D., 4 D. H. T., D-H Rear	1	---- ---	---- ---	2520 572-3	
	C Front	1	---- ---	---- ---	2486 734-5	
	Rear	1	---- ---	---- ---	2486 736-7	
	Sta. Wgn., D-H Rear	1	---- ---	---- ---	2486 740-1	
23-14-16	HANDLE, Door Pull					
	All	★	---- ---	---- ---	---- ---	2490 160-1
	SCREW	★	---- ---	---- ---	---- ---	9419 774
23-14-17	SPRING, Door Outside Handle					
	All	★	---- ---	---- ---	---- ---	2486 191
	SPRING, Door Outside Handle Shutter					
	All	★	---- ---	---- ---	---- ---	2486 054-5
23-14-18	HANDLE, Door Window Regulator					
	All	★	⊟2586 409	⊟2586 409	⊟2586 409	
	SCREW	★	⊟6023 538	⊟6023 538	⊟6023 538	
23-14-21	SPRING, Front Door Window Regulator Handle					
	All	2	---- ---	---- ---	1695 431	
23-14-24	SPACER, Window Regulator Handle					
	All	★	*2486 621	*2486 621	*2486 621	
	SPACER, Remote Control Handle					
	R-L, W-L	★	*2486 621	*2486 621	*2486 621	
	R-H, R-P, W-H, W-P	★	---- ---	2486 621		
	SPACER, Front Door Vent Wing Handle					
	All	2	---- ---	---- ---	2583 214	
23-14-26	PLATE, Door Pull Handle Mounting					
	All	★	---- ---	---- ---	---- ---	2490 162-3
23-14-27	HANDLE, Door Remote Control					
	Except C-H	★	2299 973	2299 973	2299 973	
	SCREW	★	⊟6023 538	⊟6023 538	⊟6023 538	
	C-H Black	★	---- ---	---- ---	3452-3 VX9	3450-1 VX9
	Red	★	---- ---	---- ---	---- ---	3450-1 VR7
	Yellow Green	★	---- ---	---- ---	---- ---	3450-1 VF9
	Blue	★	---- ---	---- ---	---- ---	3450-1AB4
	Turquoise	★	---- ---	---- ---	---- ---	3450-1AQ4

NOTE 1: See exterior Moulding Illustrations and Moulding Legends in front of Group 23 Body Section.

TYPE LETTERS Indicate:	V - Valiant	R - Belvedere	P - Plymouth	C - Chrysler
	L - Dart	W - Coronet	D - Dodge	Y - Imperial

★Indicates use as required.
⊟Indicates parts not listed in any previous parts book.
Right and left part numbers are on same line, first number is right, second number is left.
• Indicates change or addition.

Printed in U.S.A.
Prices and specifications subject to change without notice.
March 1966 Supersedes May 1965.

MyMopar.com

CODE	PART NAME AND DESCRIPTION	PER CAR	VALIANT / DART	PLYMOUTH BELVEDERE / DODGE CORONET	PLYMOUTH FURY / DODGE POLARA / CHRYSLER	IMPERIAL
23-14-0	**DOOR REGULATORS AND REMOTE CONTROL HANDLES - Cont'd**					
23-14-27	HANDLE - Cont'd					
	Gold and Black	★	---- ---	---- ---	---- ---	3450-1AL3
	Maroon	★	---- ---	---- ---	---- ---	3450-1AM9
	White	★	---- ---	---- ---	---- ---	3450-1AW3
23-14-41	SHAFT, Front Door Vent Wing Handle					
	All	2	---- ---	2167 634		
	WASHER	2	---- ---	6022 858		
	SCREW	2	---- ---	6022 988		
23-14-45	SPRING, Front Door Vent Wing Handle					
	All	2	2217 039			
23-14-49	DETENT, Front Door Vent Wing Handle					
	All	2	2217 044			
23-14-51	GROMMET, Door Remote Control Handle, w/CLIP					
	C-H	★	---- ---	---- ---	2589 000-1	2589 000-1
23-14-53	HANDLE, Front Door Vent Wing					
	Except D-P	★	2216 618-9	---- ---	2520 392	
	D-P	2	---- ---	---- ---	2458 062	
	PIN	2	---- ---	⊟9418 006		
	SCREW	2	---- ---	---- ---	⊟6023 538	
	HANDLE PACKAGE, Front Door Vent Wing					
	All	1	---- ---	2299 433-4		
23-14-64	SLEEVE, Door Outside Handle Spring					
	All	★	---- ---	---- ---	---- ---	2520 665
23-14-68	BASE, Door Outside Handle					
	4 D., 4 D. H. T., Sta. Wgn., C					
	Front	1	---- ---	---- ---	2520 834-5	
	Rear	1	---- ---	---- ---	2486 700-1	
	2 D. H. T., Cv. Cp., C	1	---- ---	---- ---	2486 700-1	
23-14-69	GASKET, Door Outside Handle Base					
	C	★	---- ---	---- ---	2486 900-1	
23-14-79	HANDLE, Quarter Window Regulator					
	2 D., 2 D. H. T.	2	2495 915	2495 915	⊟2586 409	
	Cv. Cp.	2	2495 915	⊟2586 409	⊟2586 409	
	SCREW	2	⊟6023 538	⊟6023 538	⊟6023 538	
23-14-136	SHUTTER, Front Door Outside Handle					
	All	1	---- ---	---- ---	---- ---	2486 044-5
23-14-147	GASKET or SEAL, Door Outside Handle					
	All — To Front	★	2216 289	2216 289		
	All — To Rear	★	2252 040-1	2252 040-1		
	P, D — To Front	★	---- ---	---- ---	2486 893	
	P, D — To Rear	★	---- ---	---- ---	2486 894	
	All	★	---- ---	---- ---	---- ---	2428 458
23-14-153	BUMPER, Door Outside Handle					
	All	★	---- ---	---- ---	---- ---	1651 493
	Center	★	---- ---	---- ---	---- ---	1707 384
23-15-0	**DOOR HINGE**					
23-15-1	HINGE, Door Upper					
	All — Front	★	2298 649	2216 458-9	2486 762-3	2520 338-9
	All — Rear	1	2254 258-9	2299 698-9	2486 766-7	

TYPE LETTERS Indicate: V - Valiant, L - Dart, R - Belvedere, W - Coronet, P - Plymouth, D - Dodge, C - Chrysler, Y - Imperial

★Indicates use as required.
⊟Indicates parts not listed in any previous parts book.
Prices and specifications subject to change without notice.
Right and left part numbers are on same line, first number is right, second number is left.
★ Indicates change on addition.

MyMopar.com

CODE	PART NAME AND DESCRIPTION		PER CAR	VALIANT / DART	PLYMOUTH BELVEDERE / DODGE CORONET	PLYMOUTH FURY / DODGE POLARA / CHRYSLER	IMPERIAL
23-15-0	**DOOR HINGE - Cont'd**						
23-15-1	HINGE - Cont'd						
	All	Rear, Right	1	---- ---	---- ---	---- ---	1651 400
		Left	1	---- ---	---- ---	---- ---	1750 565
23-15-3	HINGE, Door Lower						
	All	Front	1	2254 226-7	2188 554-5	2486 764-5	1651 396-7
		Rear	1	2254 680-1	2299 694-5	2486 768-9	
	All	Rear, Right	1	---- ---	---- ---	---- ---	1651 400
		Left	1	---- ---	---- ---	---- ---	1750 565
23-15-5	SCREW w/WASHER, Rear Door Upper Hinge						
	4 D. H. T.	Body Half	6	---- ---	---- ---	---- ---	1961 975
23-15-6	ROLLER and BUSHING PACKAGE, Door Hinge Integral Check						
	All	Front Lower	2	2525 562			
	All	Rear Lower	2	2525 563	2525 563		
	All	Front Upper	2	---- ---	2525 563		
23-15-7	SHIM, Rear Door Upper Hinge						
	All		★	---- ---	---- ---	---- ---	2189 408
23-15-9	PIN, Door Hinge						
	All	Front, Upper	2	6023 576	6022 891	6024 871	6006 043
		Lower	2	6022 891	6000 209	6024 871	6006 043
		Rear, Upper	2	6023 576	6000 209	6006 043	6006 047
		Lower	2	6022 891	6022 891	6026 011	6006 047
		Rear Lower Check Arm	2	---- ---	---- ---	6024 433	
23-15-10	SCREW and WASHER, Door Hinge Attaching						
	All		★	---- ---	---- ---	---- ---	1964 747
23-15-13	PLATE, Pillar Hinge Tapping						
	All	Front	4	---- ---	---- ---	2491 142	6006 086
	All	Center, Upper	2	2254 271	---- ---	2491 176	
		Lower	2	2254 270	---- ---	2491 178	
	PLATE, Door Hinge Tapping						
	All	Front, Upper	2	2254 242	---- ---	2491 288	
		Lower	2	---- ---	---- ---	2491 290	
		Rear, Upper	2	2254 242	2217 349	2491 448	
		Lower	2	2252 607	---- ---	2491 450	
23-15-14	SPRING, Door Lower Hinge Check Arm Tension						
	4 D., 4 D. H. T., Sta. Wgn.	Frt.	2	---- ---	---- ---	*2520 009	
		Rr.	2	---- ---	---- ---	*2486 669	
	SPRING, Front Door Check Arm Tension						
	All		2	---- ---	---- ---	---- ---	*1691 275
23-15-21	RETAINER, Center Pillar Rear Door Hinge Tapping Plate						
	All	Upper	1	---- ---	---- ---	---- ---	1750 602-3
		Lower	2	---- ---	---- ---	---- ---	1750 484
	RETAINER, Center Pillar Rear Door Upper Hinge Seal						
	All		2	---- ---	2254 799		
23-15-22	SEAL, Front Door Hinge						
	All		4	---- ---	---- ---	---- ---	1961 262

TYPE LETTERS Indicate: V - Valiant, L - Dart, R - Belvedere, W - Coronet, P - Plymouth, D - Dodge, C - Chrysler, Y - Imperial

★Indicates use as required.
⊟Indicates parts not listed in any previous parts book.
Right and left part numbers are on same line, first number is right, second number is left.
* Indicates change or addition.

Printed in U.S.A.
Prices and specifications subject to change without notice.
March 1966 Supersedes May 1965.

MyMopar.com

CODE	PART NAME AND DESCRIPTION	PER CAR	VALIANT / DART	PLYMOUTH BELVEDERE / DODGE CORONET	PLYMOUTH FURY / DODGE POLARA / CHRYSLER	IMPERIAL
23-15-0	**DOOR HINGE - Cont'd**					
23-15-30	BAR, Door Lower Hinge Torsion					
	All Front	2	2254 686			
	Rear	2	2254 687			
23-15-32	RETAINER, Door Hinge Torsion Bar Roller Grease					
	All Front Lower	2	2428 179			
	Rear Lower	2	2428 179	2428 179		
	All Front Upper	2	---- ---	2428 179		
23-15-38	BUSHING, Door Lower Hinge Roller					
	Front	2	2520 132	2520 133		
	Rear	2	2520 133	2520 133		
	BUSHING, Door Hinge Body Half					
	All Front	★	---- ---	2486 468	2486 468	
	Rear	★	2486 468	2486 468	2486 468	
23-17-0	**LOCK CYLINDER AND KEYS**					
	NOTE: For Glove Box see Part Type Code 23-06-28					
23-17-2	CYLINDER and KEYS, Door and Ignition Lock					
	Except Sta. Wgn.	1	2161 192	2161 192	2520 822	2499 022
	Taxi and Police, P, D	1	---- ---	2162 503	2520 825	
	CYLINDER and KEYS, Door, Ignition and Tailgate Lock					
	All Manual	1	2419 183	2162 531		
	Electric	1	2076 533	2076 533	2520 824	
	Police Electric	1	---- ---	2427 116	2520 827	
	Manual	1	---- ---	2241 871	2520 826	
23-17-4	CYLINDER and KEYS, Deck Lid and Glove Box Lock					
	2 D., 4 D., R-L	1	---- ---	⊟2440 017		
	2 D., 4 D., W-L	1	---- ---	⊟2520 818		
	P-L, P-M	1	---- ---	---- ---	2520 807	
	P-H	1	---- ---	---- ---	⊟2520 808	
	Police and Taxi, P-L	1	---- ---	---- ---	2520 819	
	D-L	1	---- ---	---- ---	2520 810	
	Taxi, D-L	1	---- ---	---- ---	2520 820	
	C	1	---- ---	---- ---	2520 813	2499 149
	CYLINDER and KEYS PACKAGE, Deck Lid, Glove Box and Console Lock					
	P-P	1	---- ---	---- ---	2520 809	
	D-P	1	---- ---	---- ---	2520 812	
23-17-5	CYLINDER and KEYS, Deck Lid Lock					
	Except Barracuda	1	*2583 158			
	R, P-L, P-M	1	---- ---	2440 019	2583 159	
	V Barracuda, W-H, D-L	1	2581 160	2583 174	2583 161	
	W-L, W-P, P-H, P-P	1	---- ---	2583 158	2583 160	
	Taxi and Police, R-L, W-L w/o Key, w/KNOB	1	---- ---	2428 245		
	D-H	1	---- ---	---- ---	2583 162	
	D-P	1	---- ---	---- ---	2583 163	2583 163
	C	1	---- ---	---- ---	2583 164	
23-17-9	GASKET, Deck Lid Lock Cylinder					
	P-L, P-M, D-L, C	1	2162 610	2162 610	2162 610	
	GASKET, Deck Lid Lock Cylinder Housing					
	P-H, P-P	1	---- ---	---- ---	2520 624	2486 198
23-17-10	RETAINER, Deck Lid Lock Cylinder					
	R, W-L, W-H, P-L, P-M, D-L, D-M, C	1	2162 605	2428 175	2162 605	

TYPE LETTERS Indicate: V - Valiant, L - Dart, R - Belvedere, W - Coronet, P - Plymouth, D - Dodge, C - Chrysler, Y - Imperial

★Indicates use as required.

⊟Indicates parts not listed in any previous parts book.

Printed in U.S.A.

Prices and specifications subject to change without notice.

Right and left part numbers are on same line, first number is right, second number is left.

* Indicates change or addition.

March 1966 Supersedes May 1965.

MyMopar.com

CODE	PART NAME AND DESCRIPTION	PER CAR	VALIANT / DART	PLYMOUTH BELVEDERE / DODGE CORONET	PLYMOUTH FURY / DODGE POLARA / CHRYSLER	IMPERIAL
23-17-0	**LOCK CYLINDER AND KEYS - Cont'd**					
23-17-13	HOUSING, Deck Lid Lock Cylinder Mounting					
	All	1	---- ---	---- ---	---- ---	2520 952
23-17-24	CYLINDER and KEYS, Door Lock (consists of 2 cylinders and 2 keys)					
	All	1	2161 356	2161 356	2583 165	2499 027
23-17-27	GASKET, Front Door Lock Cylinder Sealing					
	All	1	2520 585	2520 585	2520 585	
23-17-28	RETAINER, Front Door Lock Cylinder					
	All	2	2162 351	2162 351	2162 351	
23-17-36	SPACER, Deck Lid Lock Cylinder Case					
	W-H Chrome	1	---- ---	2520 998		
23-17-38	CYLINDER and KEYS, Floor Console Lock					
	P, C	1	---- ---	2499 275	2499 275	
23-17-49	CYLINDER and KEYS, Tailgate Lock					
	P, D Manual	1	2419 271	2162 536	2162 536	
	All Electric	1	2161 423	2161 423	2161 423	
23-17-51	GASKET, Electric Tailgate Lock Cylinder					
	All	1	2520 585	2520 585	2520 585	
23-17-52	RETAINER, Electric Tailgate Lock Cylinder Mounting					
	Sta. Wgn.	1	1819 317	1819 317	1819 317	
23-17-72	CYLINDER and KEYS, Tire Well Cover Panel Lock					
	Sta. Wgn.	1	---- ---	2292 051	2583 166	
	CYLINDER and KEYS Third Seat Back Lock					
	Sta. Wgn.	1	---- ---	2292 051	2583 166	
23-17-74	LEVER, Rear Floor Pan Cover Panel Lock Cylinder Sta. Wgn.	1	---- ---	---- ---	⊟2520 621	
	LEVER, 3rd Seat Back Release Handle Lock Cylinder Sta. Wgn.	1	---- ---	---- ---	⊟2520 621	
23-18-0	**DOOR LOCKS AND REMOTE CONTROLS**					
23-18-5	LOCK, Door					
	All Front	1	2486 260-1	2583 180-1	2583 180-1	2583 180-1
	Rear	1	2486 270-1	2486 250-1	2520 724-5	2486 250-1
	SCREW, All	★	6022 998	6022 998	6022 998	6022 998
23-18-11	LINK, Door Lock Remote Control					
	4 D., 4 D. H. T., Sta. Wgn. Front	2	2428 212	2252 044	2486 780	2486 002-3
	4 D., 4 D. H. T., Sta. Wgn., D, C Rear	2	2428 211	2299 839	2520 358	2486 012-3
	2 D. H. T., Cv. Cp., 2 D.	2	2428 210	2252 046	2486 782	2486 000
	4 D., 4 D. H. T., P Rear	2	---- ---	---- ---	2486 798	
	Sta. Wgn., P Rear	2	---- ---	---- ---	2520 358	
23-18-13	REMOTE CONTROL, Door Lock					
	P, D, C-L, C-M	★	2299 516-7	2428 052-3	2299 516-7	2428 318-9
	C3 Front	1	---- ---	---- ---	2520 980-1	
	Rear	1	---- ---	---- ---	2520 976-7	
23-18-20	LINK, Door Outside Handle to Lock					
	4 D., 4 D. H. T., Sta. Wgn.					
	P Front	★	---- ---	2520 680-1	2486 786	
	P Rear	2	---- ---	2520 682		
	D Rear	2	---- ---	---- ---	2765 121	
	2 D. H. T., Cv. Cp., 2 D., P	★	---- ---	2520 678-9	2520 504	
	4 D., 4 D. H. T., Sta. Wgn., D Front	2	---- ---	---- ---	2486 794	⊟2428 492
	2 D. H. T., Cv. Cp., D	2	---- ---	---- ---	2520 508	

TYPE LETTERS Indicate: V - Valiant, L - Dart, R - Belvedere, W - Coronet, P - Plymouth, D - Dodge, C - Chrysler, Y - Imperial

★Indicates use as required.
⊟Indicates parts not listed in any previous parts book.
Right and left part numbers are on same line, first number is right, second number is left.

MyMopar.com

Prices and specifications subject to change without notice.

Printed in U.S.A.
March 1966 Supersedes May 1965.

23-18-0 DOOR LOCKS AND REMOTE CONTROLS - Cont'd

CODE	PART NAME AND DESCRIPTION	PER CAR	VALIANT / DART	PLYMOUTH BELVEDERE / DODGE CORONET	PLYMOUTH FURY / DODGE POLARA / CHRYSLER	IMPERIAL
23-18-20	LINK - Cont'd					
	4 D., 4 D. H. T., Sta. Wgn., C Front	1	---- ---	---- ---	2520 510-1	
	2 D. H. T., Cv. Cp., C	2	---- ---	---- ---	2520 512	2428 488
	LINK, Door Outside Handle Lock					
	4 D., 4 D. H. T., Sta. Wgn., D Rear	2	---- ---	---- ---	⊟2765 120	
	LINK, Rear Door Outside Handle Idler Bracket					
	All	2	---- ---	---- ---	---- ---	*2486 008
23-18-21	SPRING, Door Lock Remote Control Lever					
	All	★	---- ---	2167 643		
	SPRING, Rear Door Electric Lock Locking Lever Tension					
	4 D., 4 D. H. T., Sta. Wgn.	2	---- ---	---- ---	⊟2583 977	⊟2583 976
23-18-25	CONTROL, Rear Door Lock Locking					
	4 D., 4 D. H. T., Sta. Wgn.	1	2486 634-5	2486 036-7	2486 720-1	2486 642-3
	CONTROL, Front Door Lock Cylinder Lock w/LINK					
	2 D. H. T., Cv. Cp., D	1	---- ---	---- ---	2520 880-1	
	CONTROL, Door Outside Handle Link					
	4 D., 4 D. H. T., Sta. Wgn., D Rear	1	---- ---	---- ---	⊟2765 116-7	
23-18-26	LINK, Front Door Lock to Lock Cylinder					
	All	1	2243 348-9			
	4 D., 4 D. H. T., Sta. Wgn., P	1	---- ---	2299 634-5	2486 738-9	
	4 D., 4 D. H. T., Sta. Wgn., D	1	---- ---	---- ---	2486 796-7	
	4 D., 4 D. H. T., Sta. Wgn., C	1	---- ---	---- ---	2486 742-3	2428 498-9
	2 D. H. T., Cv. Cp., 2 D., P	1	---- ---	2299 628-9	2520 768-9	
	2 D. H. T., Cv. Cp., C	1	---- ---	---- ---	2520 840-1	2428 496-7
	LINK or ROD, Door Lock Locking Control Push					
	All Front	2	2520 160			
	4 D., 4 D. H. T., Sta. Wgn. Front	★	---- ---	2520 172-3	2486 719	2486 006
	4 D., Sta. Wgn. Rear	2	---- ---	2486 034		
	2 D. H. T., Cv. Cp., 2 D.	★	---- ---	2520 162-3	2486 718	2486 004
	LINK, Rear Door Lock Locking Control					
	4 D., Sta. Wgn. Right	1	---- ---	2486 638		
	Left	1	---- ---	2486 637		
	All w/o Sleeve	★	---- ---	---- ---	---- ---	*2486 014
	4 D., 4 D. H. T., P w/SLEEVE	1	---- ---	---- ---	2520 934-5	
	4 D., 4 D. H. T., D, C w/SLEEVE	1	---- ---	---- ---	2520 936-7	
	Sta. Wgn. w/SLEEVE	1	---- ---	---- ---	2520 936-7	
	LINK, Rear Door Outside Handle Idler Bracket					
	All	2	---- ---	---- ---	---- ---	*2486 574
23-18-27	KNOB, Door Lock Locking Control					
	W Red	★	4313 AR7	4313 AR7		
	R Gold	★	4313 AY4	4313 AY4		
	P, D, C-L Black	★	4313 TX9	4313 TX9	4313 TX9	
	D, C Blue	★	---- ---	---- ---	4313 AB6	
	D, C Turquoise	★	---- ---	---- ---	4313 AQ6	
	D, C Tan	★	---- ---	---- ---	4313 AT6	
	D, C Red	★	---- ---	---- ---	4313 AR7	
	D, C Gold	★	---- ---	---- ---	4313 AY3	
	C White	★	---- ---	---- ---	4313 AW2	
	All	★	---- ---	---- ---	---- ---	2486 660
	All Chrome	★	2583 155	2583 155	2583 155	

TYPE LETTERS Indicate: V - Valiant, L - Dart, R - Belvedere, W - Coronet, P - Plymouth, D - Dodge, C - Chrysler, Y - Imperial

★Indicates use as required.
⊟Indicates parts not listed in any previous parts book.
May 1965.

Printed in U.S.A.
Prices and specifications subject to change without notice.
Right and left part numbers are on same line, first number is right, second number is left.
* Indicates change or addition.

MyMopar.com

CODE	PART NAME AND DESCRIPTION	PER CAR	VALIANT / DART	PLYMOUTH BELVEDERE / DODGE CORONET	PLYMOUTH FURY / DODGE POLARA / CHRYSLER	IMPERIAL
23-18-0	**DOOR LOCKS AND REMOTE CONTROLS - Cont'd**					
23-18-29	CLIP, Front Door Lock Cylinder to Locking Lever					
	All	1	---- ---	2520 178-9		
	CLIP, Door Lock Locking Control Knob					
	All	★	2216 276	2216 276	2216 276	
	CLIP, Front Door Lock Locking Lever					
	All	4	2486 327	2486 327	2486 327	2486 327
	CLIP, Rear Door Lock Locking Control Link to Lever					
	All	2	---- ---	2486 040	2486 040	
	RETAINER, Door Outside Handle to Lock Link					
	All	★	---- ---	2520 600	*2520 600	*2520 600
	RETAINER, Rear Door Bell Crank to Lock Link					
	All	4	---- ---	---- ---	---- ---	2520 600
	RETAINER, Rear Door Outside Handle to Bell Crank Link					
	All	4	---- ---	---- ---	---- ---	2520 600
23-18-35	RETAINER or CLIP, Door Lock Remote Link to Inside Panel					
	4 D., Sta. Wgn.	★	2428 087			
	Except 4 D., Sta. Wgn.	2	2428 086	2428 163		
	All Front	2	---- ---	---- ---	2520 793	
	Rear	2	---- ---	---- ---	2520 690	
	4 D. H. T. Front	2	---- ---	---- ---	---- ---	2520 846
	2 D. H. T., Cv. Cp.	2	---- ---	---- ---	---- ---	2520 864
23-18-37	SEAL, Door Lock Locking Control Push Link					
	All	★	---- ---	---- ---	---- ---	2492 960
23-18-42	CLIP, Door Lock Remote Control Link to Lock					
	All	★	2520 565	2520 565	2520 565	2520 565
	CLIP, Door Link Remote Control Link to Remote Control Handle					
	All	★	2520 565	2520 565	---- ---	2520 565
	CLIP, Rear Door Lock Locking Control Push Rod					
	All	2	---- ---	2520 565		
	CLIP, Rear Door Lock Locking Control Link to Inside Panel					
	All	2	---- ---	---- ---	2520 697	
	CLIP, Rear Door Lock Locking Control Link to Remote Control					
	4 D. H. T.	2	---- ---	---- ---	---- ---	2520 565
23-18-49	ESCUTCHEON, Door Lock Locking Control					
	All	★	2428 178			
23-18-51	BRACKET, Rear Door Outside Handle to Lock Idler					
	All	2	---- ---	---- ---	---- ---	2486 608
23-18-54	GROMMET, Door Lock Locking Lever					
	All Clear	★	---- ---	2440 177	2440 177	
23-18-103	SWITCH, Electric Front Door Lock					
	All Remote Button Actuated	2	---- ---	---- ---	2587 617	2427 184
	All Key Actuated	1	---- ---	---- ---	2631 078-9	2631 078-9

TYPE LETTERS Indicate: V - Valiant, L - Dart, R - Belvedere, W - Coronet, P - Plymouth, D - Dodge, C - Chrysler, Y - Imperial

★Indicates use as required.
⊟Indicates parts not listed in any previous parts book.
Right and left part numbers are on same line, first number is right, second number is left.
* Indicates change or addition.

Printed in U.S.A.
Prices and specifications subject to change without notice.
May 1965.

MyMopar.com

CODE	PART NAME AND DESCRIPTION	PER CAR	VALIANT / DART	PLYMOUTH BELVEDERE / DODGE CORONET	PLYMOUTH FURY / DODGE POLARA / CHRYSLER	IMPERIAL
23-18-0	**DOOR LOCKS AND REMOTE CONTROLS - Cont'd**					
23-18-104	SPRING, Door Lock Switch Return					
	All	2	---- ---	---- ---	2661 118	
23-18-105	WIRING, Electric Door Lock					
	All	1	---- ---	---- ---	2497 406	
	All, w/CAPACITOR	1	---- ---	---- ---	2661 932	2661 932
23-18-106	RELAY, Electric Door Lock					
	All	1	---- ---	---- ---	*2770 211	*2770 211
23-18-107	LINK, Electric Door Lock Solenoid					
	4 D., 4 D. H. T., Sta. Wgn.					
	Front	2	---- ---	---- ---	2520 829	2427 948
	D, C Rear	★	---- ---	---- ---	2520 942-3	2496 100
	2 D. H. T., Cv. Cp.	2	---- ---	---- ---	---- ---	2427 947
	4 D., 4 D. H. T., P Rear	1	---- ---	---- ---	2520 940-1	
	Sta. Wgn., P Rear	1	---- ---	---- ---	2520 942-3	
23-18-114	INSERT, Electric Door Lock Switch					
	All	2	---- ---	---- ---	---- ---	2427 726
23-18-115	SOLENOID, Electric Door Lock					
	All Frt.	★	---- ---	---- ---	*2520 832-3	*2520 832-3
	Rear Rt.	★	---- ---	---- ---	*2520 833	*2520 833
	Lt.	★	---- ---	---- ---	*2520 832	*2520 832
23-18-117	KNOB, Electric Door Lock Switch					
	All	2	---- ---	---- ---	---- ---	2427 292
23-18-118	BRACKET, Electric Door Lock Solenoid Mounting					
	All Front	1	---- ---	---- ---	2520 838-9	
23-18-121	CONDUIT, Front Door Electric Door Lock Wiring					
	All	2	---- ---	---- ---	2497 774	
23-18-124	BRACKET, Electric Front Door Lock Switch					
	Except 2 D. H. T., Cv. Cp.	1	---- ---	---- ---	2587 618-9	
23-18-125	ROD, Electric Front Door Lock Switch Actuating Push					
	Except 2 D. H. T., Cv. Cp.	2	---- ---	---- ---	2580 997	
23-18-126	BOOT, Electric Front Door Lock Switch					
	4 D., 4 D. H. T., Sta. Wgn.	2	---- ---	---- ---	*2661 572	
23-19-0	**DECK LID**					
23-19-8	LID, Deck					
	V Barracuda (also specify 1 of 2528639)	1	⊟2769 015			
	V, except Barracuda	1	2493 484			
	L, R, D	1	2493 676	2576 160	2493 380	
	W, P-L, P-M	1	---- ---	2493 413	2493 326	
	P-H, P-P	1	---- ---	---- ---	2493 644	
	C	1	---- ---	---- ---	2493 370	2425 636
23-19-9	ROD, Deck Lid Lift Assist					
	Barracuda	1	2583 290			
23-19-17	WASHER, Deck Opening Lower Panel Finish Panel Sealing					
	V-H, V-P	6	2252 282			

TYPE LETTERS Indicate: V - Valiant, L - Dart, R - Belvedere, W - Coronet, P - Plymouth, D - Dodge, C - Chrysler, Y - Imperial

★Indicates use as required.
⊟Indicates parts not listed in any previous parts book.
March 1966 Supersedes May 1965.

Printed in U.S.A.
Prices and specifications subject to change without notice.
Right and left part numbers are on same line, first number is right, second number is left.
* Indicates change or addition.

MyMopar.com

CODE	PART NAME AND DESCRIPTION	PER CAR	VALIANT / DART	PLYMOUTH BELVEDERE / DODGE CORONET	PLYMOUTH FURY / DODGE POLARA / CHRYSLER	IMPERIAL
23-19-0	**DECK LID - Cont'd**					
23-19-30	SUPPORT, Deck Lid (or Prop)					
	V Barracuda	1	2520 496			
	V Barracuda Tube Type, Outer . .	1	⊟2802 001			
	RETAINER	2	6006 324			
	BRACKET, Deck Lid Support					
	V Barracuda	1	2528 837			
23-19-33	TUBE, Deck Lid Prop					
	V Barracuda Inner	1	2583 573			
23-19-35	HOOK, Deck Lid Prop Tube					
	V Barracuda Inner.	1	2583 576			
	Outer	1	2583 577			
23-19-36	BRACKET, Deck Lid Inside Panel Support					
	Barracuda	1	2528 639			
	BRACKET, Deck Lid Prop. Tube Attaching					
	Barracuda Outer	1	⊟2802 003			
	Inner	1	⊟2802 004			
23-19-59	SPACER, Deck Lid Inside Panel to Deck Upper Panel					
	Cv. Cp., R	2	---- ---	2480 387		
	Cv. Cp., W	2	---- ---	2526 612		
	SCREW	2	---- ---	162 402		
23-19-63	BUMPER, Deck Lid					
	V	2	2484 307	2484 307	2484 307	
	L	2	1954 763			
	All Side	2	---- ---	---- ---	---- ---	2218 817
	Lower	2	---- ---	---- ---	---- ---	2571 225
23-19-68	GROMMET, Vacuum Deck Lid Lock					
	D, C	2	---- ---	---- ---	1370 460	
23-19-70	CATCH, Deck Lid Lock					
	All	1	2244 149	2244 149	2244 149	2244 149
23-19-74	SUPPORT, Deck Lid Lower Panel Lock					
	V Barracuda	1	2576 050			
	V, except Barracuda	1	2425 106			
	L, W, P	1	2425 041	2484 871	2484 734	
	All	1	---- ---	---- ---	---- ---	2491 690
23-19-76	BRACKET or BRACE, Deck Lid Hinge Support to Wheelhouse					
	V, except Cv. Cp., Barracuda	1	2243 222-3			
	L, except Cv. Cp.	2	2243 594			
	Cv. Cp., V	1	2423 650-1			
	Cv. Cp., L	1	2423 652-3			
23-19-78	COVER, Deck Lid Lock Support					
	V Barracuda	1	4458 VX9			
23-19-79	TANK, Vacuum Deck Lid Lock Reservoir					
	D, C	1	---- ---	---- ---	2520 747	
23-19-82	SUPPORT, Deck Lid Hinge					
	V, except Cv. Cp., Barracuda	1	2243 546-7			
	Cv. Cp., V, P Upper	1	2424 396-7	2422 844-5	2528 538-9	
	Lower	1	2255 978-9	2255 696-7	2482 178-9	
	Cv. Cp., L, D Upper	1	2424 398-9	---- ---	2576 114-5	
	Lower	1	2422 622-3	---- ---	2482 182-3	
	4 D., 2 D. Upper	1	---- ---	2255 384-5		

TYPE LETTERS Indicate: V - Valiant, L - Dart, R - Belvedere, W - Coronet, P - Plymouth, D - Dodge, C - Chrysler, Y - Imperial

★Indicates use as required.
⊟Indicates parts not listed in any previous parts book.
Right and left part numbers are on same line, first number is right, second number is left.
* Indicates change or addition.

Printed in U.S.A.
Prices and specifications subject to change without notice.
March 1966 Supersedes May 1965.

MyMopar.com

CODE	PART NAME AND DESCRIPTION	PER CAR	VALIANT / DART	PLYMOUTH BELVEDERE / DODGE CORONET	PLYMOUTH FURY / DODGE POLARA / CHRYSLER	IMPERIAL
23-19-0	**DECK LID - Cont'd**					
23-19-82	SUPPORT - Cont'd					
	2 D. H. T., D, C-L, C-M, C-P Upper	1	---- ---	2481 342-3	2493 970-1	
	2 D. H. T., C-H Upper	1	---- ---	---- ---	2493 976-7	
	L, except Cv. Cp.	1	2245 098-9	---- ---	---- ---	2495 146-7
	P, except Cv. Cp. Upper	1	---- ---	---- ---	2493 976-7	
	Lower	1	---- ---	---- ---	2481 552-3	
	D, except Cv. Cp. Lower	1	---- ---	2255 782-3	2482 180-1	
	4 D., D-L Upper	1	---- ---	---- ---	2493 976-7	
	C, except Cv. Cp. Lower	1	---- ---	---- ---	2481 518-9	
	Cv. Cp., C Upper	1	---- ---	---- ---	2576 114-5	
	Lower	1	---- ---	---- ---	2482 184-5	
	D-H 6 Window Upper	1	---- ---	---- ---	2493 976-7	
	4 D., 4 D. H. T., C, D Upper	1	---- ---	---- ---	2493 976-7	
	Cv. Cp.	1	---- ---	---- ---	---- ---	2495 148-9
23-19-84	HINGE, Deck Lid					
	V Barracuda	2	2520 429			
	V, P, except Cv. Cp.	2	2243 598	2253 988	2526 604-5	
	Cv. Cp., V	2	2424 340			
	Cv. Cp., L, P	2	2424 341	2255 527	2482 482	
	D, C	★	---- ---	---- ---	2526 606-7	2422 384
23-19-85	PIN, Deck Lid Hinge					
	V Barracuda	★	6024 965	---- ---	---- ---	*1691 899
23-19-94	SWITCH, Deck Lid Lock Release					
	D, C Vacuum	1	---- ---	---- ---	2520 739	
	All Electric	1	---- ---	---- ---	---- ---	2426 836
	NUT	1	---- ---	---- ---	116 000	
23-19-97	TUBE, Vacuum Deck Lid Lock Switch					
	D, C (sold by inch)	★	---- ---	---- ---	2254 552	
23-19-98	BRACKET, Vacuum Deck Lid Lock Release Switch Mounting					
	D, C	1	---- ---	---- ---	2520 751	
	SCREW	3	---- ---	---- ---	9420 374	
	PLATE, Remote Deck Lid Release					
	All	1	---- ---	---- ---	---- ---	2496 110
23-19-99	TAPPING PLATE, Deck Lid Hinge					
	All	2	2243 327	2243 327	2243 327	2491 804
23-19-102	SOLENOID and MOUNTING BRACKET, Electric Deck Lid Lock					
	All	1	---- ---	---- ---	---- ---	2486 614
23-19-103	COVER, Electric Deck Lid Lock Solenoid					
	All	1	---- ---	---- ---	---- ---	2499 258
	SCREW	2	---- ---	---- ---	---- ---	6024 493
23-19-105	LOCK, Deck Lid					
	All	1	2167 260	2167 260	2167 260	2167 260
	D, C Vacuum	1	---- ---	---- ---	2428 275	
	Complete	1	---- ---	---- ---	2520 735	
	All Electric	1	---- ---	---- ---	---- ---	2428 275
23-19-109	CONNECTOR, Vacuum Deck Lid Lock Tube					
	D, C	2	---- ---	---- ---	2520 749	
	Tee Type	1	---- ---	---- ---	2520 748	

TYPE LETTERS Indicate: V - Valiant, L - Dart, R - Belvedere, W - Coronet, P - Plymouth, D - Dodge, C - Chrysler, Y - Imperial

★Indicates use as required.
⊟Indicates parts not listed in any previous parts book.

Printed in U.S.A.

Prices and specifications subject to change without notice.

Right and left part numbers are on same line, first number is right, second number is left.

* Indicates change or addition.

MyMopar.com

CODE	PART NAME AND DESCRIPTION	PER CAR	VALIANT / DART	PLYMOUTH BELVEDERE / DODGE CORONET	PLYMOUTH FURY / DODGE POLARA / CHRYSLER	IMPERIAL
23-19-0	**DECK LID - Cont'd**					
23-19-110	CLIP, Vacuum Deck Lid Lock Tube					
	D, C	2	---- ---	---- ---	2520 750	
23-19-114	NAME PLATE, MEDALLION or ORNAMENT, Deck Lid (1)					
23-19-117	PLATE, Deck Lid Name Plate Backing					
	Y-H "Le"	1	---- ---	---- ---	---- ---	2480 884
	"Baron"	1	---- ---	---- ---	---- ---	2480 885
23-19-124	SEAL, Deck Lid Lock Cylinder Hole					
	D-H	1	---- ---	---- ---	2602 886	
23-19-174	SEAL, Deck Lid Hinge Attaching					
	V Barracuda Body Half	4	1316 864			
23-19-177	BAR, Deck Lid Hinge Torsion					
	V, P, except Cv. Cp., Barracuda	1	2242 534-5	---- ---	2482 464-5	
	L, except Cv. Cp.	1	*2243 804-5	*2574 998-9		
	Cv. Cp., V	1	2424 214-5			
	Cv. Cp., L, P	1	*2424 216-7	*2602 118-9	*2482 466-7	
	All	1	---- --	---- ---	*2482 468-9	2422 390-1
23-19-178	SLIDE, Deck Lid Hinge Torsion Bar End					
	V, except Cv. Cp., Barracuda	2	2480 230			
	L	2	2480 230	2480 230		
	Cv. Cp., V, P	2	2480 646	---- ---	2528 598	
	RETAINER, Deck Lid Hinge Torsion Bar					
	Cv. Cp., V	1	*2259 413			
	Cv. Cp., L	1	2527 001			
	D, C	1	---- ---	2527 001	2527 001	2527 001
	P, except Cv. Cp.	1	---- ---	---- ---	2527 001	
	ROLLER, Deck Lid Hinge Torsion Bar					
	P, except Cv. Cp.	2	---- ---	---- ----	2482 691	
	D, C	2	---- ---	---- ---	2482 691	
23-19-185	LINK, Deck Lid Hinge to Torsion Bar					
	All	1	---- ---	---- ---	---- ---	2570 542-3
23-19-188	STOP, Deck Lid Hinge Torsion Bar					
	Cv. Cp.	2	---- ---	2423 784		
23-19-198	HINGE, Rear Compartment Security Panel					
	V Barracuda	1	2527 714			
23-19-200	STRIKER, Rear Compartment Security Panel Lock					
	V Barracuda	2	2520 650			
	SCREW	2	456 867			
23-19-204	LOCK, Rear Compartment Security Panel					
	V Barracuda	2	2520 645			
23-19-206	BUMPER, Rear Compartment Security Panel					
	V Barracuda	2	2528 577			
	BUMPER, Deck Opening Upper Inner Panel to Rear Compartment Security Panel					
	V Barracuda	3	2529 117			

NOTE 1: See Exterior Moulding Illustrations and Moulding Legends in front of Group 23 Body section.

TYPE LETTERS Indicate: V - Valiant, L - Dart, R - Belvedere, W - Coronet, P - Plymouth, D - Dodge, C - Chrysler, Y - Imperial

★Indicates use as required.
⊟Indicates parts not listed in any previous parts book.
Right and left part numbers are on same line, first number is right, second number is left.
* Indicates change or addition.

MyMopar.com

CODE	PART NAME AND DESCRIPTION	PER CAR	VALIANT / DART	PLYMOUTH BELVEDERE / DODGE CORONET	PLYMOUTH FURY / DODGE POLARA / CHRYSLER	IMPERIAL
23-20-0	**FLOOR MATS**					
23-20-8	MAT, Front Floor					
	V except Barracuda — Black	1	*1644 AX8			
	L — Blue	1	*1643 AB8	*1600 VBB		
	Turquoise	1	1643 AQ8	1600 VQQ		
	Red	1	1643 AR7			
	Tan	1	1643 AT8	1600 VTT		
	Red and Black	1	---- ---	1600 ARX		
	W-L, R-L — Heavy Duty, Black	1	1644 AX8	1601 VX8		
	V-L — Black	1	1615 TX8			
	L-L — Turquoise	1	⊟1643 AQ8			
	4 D., Sta.Wgn., 2 D., P-L, D-L — Heavy Duty, Black	1	---- ---	---- ---	1626 AX8	
23-20-11	MAT, Intermediate Floor					
	Sta.Wgn., V-L, L-L — Black	1	1619 AX8			
	Sta.Wgn., L-L — Blue	1	1619 AB8			
	Turquoise	1	1619 AQ8			
	Tan	1	1619 AT8			
	Red	1	1619 AR7			
	Sta.Wgn., R-L, W-L, Blue	1	---- ---	1603 ABB		
	Red and Black	1	---- ---	1603 ARX		
	Tan	1	---- ---	1603 ATT		
	Heavy Duty, Black	1	---- ---	1604 AX8		
	Sta.Wgn., W-L — Turquoise	1	---- ---	1603 AQQ		
	Sta.Wgn., P-L, D-L, Heavy Duty, Black	1	---- ---	---- ---	1637 AX8	
23-20-14	PLATE, Door Sill Inner Scuff					
	V Barracuda	1	2572 668-9			
	4 D., 4 D. H. T., Sta.Wgn. — Front	1	2292 054-5	2251 404-5	2499 472-3	2162 136-7
	4 D., 4 D. H. T., Sta.Wgn., D, C — Rear	1	2292 056-7	2251 490-1	2499 476-7	2490 880-1
	2 D. H. T., Cv. Cp., 2 D.	1	2490 092-3	---- ---	2499 470-1	2162 140-1
	2 D. H. T., 2 D.	1	---- ---	2251 328-9		
	Cv. Cp.	1	---- ---	2572 910-1		
	Sta.Wgn., P — Rear	1	---- ---	---- ---	2499 476-7	
	4 D., 4 D. H. T., P — Rear	1	---- ---	---- ---	2499 474-5	
	PLATE, Door Sill Outer Scuff					
	4 D., Sta.Wgn. — Front	2	2419 664	2419 667		
	Rear	2	2419 665	2419 668		
	2 D. H. T., Cv. Cp., 2 D.	2	2419 663	2419 666		
23-20-16	INSERT, Door Sill Scuff Plate					
	All	★	---- ---	---- ---	---- ---	1839 956
23-20-19	SUPPORT, Door Sill Scuff Plate					
	P, D — Rear	2	---- ---	---- ---	*2499 492	
	Sta.Wgn., C-L, C-H, Rear	2	---- ---	---- ---	2499 492	
	4 D. H. T., C-M — Rear	1	---- ---	---- ---	*2581 472-3	
	4 D., 4 D. H. T., C-L, Rear	2	---- ---	---- ---	*2499 493	
	4 D., 6 Window, C-H, Rear	2	---- ---	---- ---	*2499 493	
	4 D. H. T., C-H — Rear, w/Bucket Seats	1	---- ---	---- ---	*2581 472-3	
	Rear, w/o Bucket Seats	2	---- ---	---- ---	*2499 493	
	2 D. H. T., Cv. Cp., 2 D.	2	---- ---	---- ---	2499 496	1690 742
	4 D. H. T. — Front	2	---- ---	---- ---	---- ---	1692 173
	Rear, Rt.	1	---- ---	---- ---	---- ---	1692 172
	Lt.	1	---- ---	---- ---	---- ---	1810 910

TYPE LETTERS Indicate: V - Valiant, L - Dart, R - Belvedere, W - Coronet, P - Plymouth, D - Dodge, C - Chrysler, Y - Imperial

★Indicates use as required.
⊟Indicates parts not listed in any previous parts book.
May 1965.

Printed in U.S.A.
Prices and specifications subject to change without notice.
Right and left part numbers are on same line, first number is right, second number is left.
* Indicates change or addition.

MyMopar.com

CODE	PART NAME AND DESCRIPTION	PER CAR	VALIANT / DART	PLYMOUTH BELVEDERE / DODGE CORONET	PLYMOUTH FURY / DODGE POLARA / CHRYSLER	IMPERIAL
23-20-0	**FLOOR MATS - Cont'd**					
23-20-24	EXTENSION, Door Sill Scuff Plate					
	V Barracuda	1	2499 970-1			
	4 D., 4 D. H. T., P, Rear	1	---- ---	---- ---	2499 480-1	
	4 D., 4 D. H. T., D, Rear	1	---- ---	---- ---	2499 482-3	
	4 D., 4 D. H. T., C Rear	1	---- ---	---- ---	*2499 484-5	
	Sta. Wgn. Rear	1	---- ---	---- ---	2499 482-3	
	D-P Front	1	---- ---	---- ---	2581 812-3	
	2 D. H. T., Cv. Cp., 2 D.	1	---- ---	---- ---	2499 488-9	
23-20-29	MAT, Rear Deck Floor					
	4 D., 2 D. H. T., 2 D.	1	1613 TA7			
	W	1	---- ---	2581 593		
	R, P, except Cv. Cp.	1	---- ---	2581 591	2581 284	
	D, except Cv. Cp.	1	---- ---	---- ---	2572 023	
	C, except Cv. Cp.	1	---- ---	---- ---	2572 120	
	Cv. Cp., R, P	1	1614 TA7	2581 916	2581 280	
	Cv. Cp., D.	1	---- ---	---- ---	2581 279	
	Cv. Cp., C	1	---- ---	---- ---	2581 283	
23-20-32	RETAINER, Floor Covering					
	All In Accel. Shaft Area	1	---- ---	2656 086		
	1/2" x 2 1/4"	★	---- ---	2292 379		
23-20-41	MAT, Rear Floor					
	4 D., 2 D., 2 D. H. T., V-L					
	Black	1	1619 AX8			
	4 D., 2 D., L-L Blue	1	1617 AB8			
	Turquoise	1	1617 AQ8			
	Tan	1	1617 AT8			
	Red	1	1617 AR7			
	Black	1	1617 TX8			
	4-D., 2 D., R-L, W-L					
	Blue	1	---- ---	1603 ABB		
	Turquoise	1	---- ---	1603 AQQ		
	Red and Black	1	---- ---	1603 ARX		
	Tan	1	---- ---	1603 ATT		
	Heavy Duty, Black	1	---- ---	1604 AX8		
	4 D., Sta. Wgn., P-L, D-L					
	Heavy Duty, Black	1	---- ---	---- ---	1637 AX8	
	2 D., P-L Heavy Duty, Black	1	---- ---	---- ---	1635 AX8	
	Sta. Wgn. Cargo, Blue	1	1612 VB8			
	Turquoise	1	1612 VQ8			
	Tan	1	1612 VT8			
	Red	1	1612 VR8			
	Black	1	1612 TX8			
	Sta. Wgn., Rear Floor Well					
	Rubber, Black	1	---- ---	1608 TX8		
	Jute, Black	1	---- ---	1607 TXA		
	Sta. Wgn., P, D Blue	1	---- ---	---- ---	1631 AB8	
	Turquoise	1	---- ---	---- ---	1631 AQ8	
	Red	1	---- ---	---- ---	1631 AR7	
	Tan	1	---- ---	---- ---	1631 AT8	
	Black	1	---- ---	---- ---	⊟1632 AX8	
	Sta. Wgn., C Black	1	---- ---	---- ---	⊟1632 AX8	
	Sta. Wgn., P, D Yellow Gold	1	---- ---	---- ---	1631 AY8	
23-20-65	PLATE, Center Pillar Scuff					
	4 D., Sta. Wgn.	2	2292 274			

TYPE LETTERS Indicate: V - Valiant, L - Dart, R - Belvedere, W - Coronet, P - Plymouth, D - Dodge, C - Chrysler, Y - Imperial

★Indicates use as required.
⊟Indicates parts not listed in any previous parts book.
Right and left part numbers are on same line, first number is right, second number is left.
* Indicates change or addition.

Printed in U.S.A.
Prices and specifications subject to change without notice.
May 1965.

MyMopar.com

CODE	PART NAME AND DESCRIPTION	PER CAR	VALIANT / DART	PLYMOUTH BELVEDERE / DODGE CORONET	PLYMOUTH FURY / DODGE POLARA / CHRYSLER	IMPERIAL
23-21-0	**MIRRORS**					
23-21-3	MIRROR PACKAGE, Rear View					
	Taxi and Police, P-L, D-L					
	Outside, Clear	1	2292 194	2292 194	2292 194	
	Non Glare	1	2292 195	2292 195	2292 195	
	Consists of:					
	1 - ---- --- Mirror					
	1 - ---- --- Gasket					
	1 - ---- --- Set Screw					
	1 - ---- --- Clip					
23-21-5	GLASS and RETAINER SPRING PACKAGE, Rear View Outside Mirror					
	All Use w/2299 574	1	2299 575	2299 575	2299 575	
	Consists of:					
	1 - ---- --- Glass					
	1 - ---- --- Spring, Retainer					
23-21-8	MIRROR, Rear View Inside					
	All Stainless Steel	1	2428 246	2428 246	2428 246	
	All Prismatic	1	---- ---	---- ---	---- ---	2421 208
	Sta. Wgn., Inst. Panel Mounted, w/A/Cond., Prismatic	1	---- ---	---- ---	*2421 208	
	SCREW, Stainless Steel Mirror	1	---- ---	6025 275	6025 275	
	MIRROR, Visor Vanity					
	C Right	1	---- ---	---- ---	2589 096	
	NOTE: Also see Part Type Code 1-76-3					
23-21-14	BASE or BRACKET, Rear View Inside					
	Except Cv. Cp. Chrome	1	2299 817	2486 025	2520 719	2080 774
	SCREW	3	---- ---	---- ---	---- ---	9416 684
	Cv. Cp. Chrome	1	2428 235	2486 607	2486 848	2080 897
	Sta. Wgn. Inst. Panel Mounted	1	---- ---	---- ---	2086 275	
	NUT	1	---- ---	---- ---	⊟6025 562	
23-21-15	MIRROR, Rear View Outside Remote Control					
	All Includes REMOTE CONTROL	1	---- ---	---- ---	---- ---	2520 397
	WASHER	1	---- ---	---- ---	---- ---	6024 474
	NUT	1	---- ---	---- ---	---- ---	6024 510
23-21-16	SPACER, Instrument Panel Rear View Mirror					
	Sta. Wgn. Base	2	---- ---	---- ---	2520 996	
23-21-18	GASKET, Outside Remote Control Rear View Mirror Base					
	All	1	2486 363	2486 363	2486 363	2486 363
	GASKET, Outside Rear View Mirror Adapter Side					
	All	2	---- ---	---- ---	---- ---	2520 386
23-21-26	RETAINER, Rear View Inside Mirror Bracket					
	Except Cv. Cp.	1	---- ---	---- ---	2520 703	2080 776
	Cv. Cp.	1	---- ---	---- ---	2520 723	
	Sta. Wgn. Inst. Panel Mounted	1	---- ---	---- ---	1839 965	
23-21-30	PLATE, Windshield Opening Upper Frame Mirror Mounting					
	Cv. Cp.	1	2423 997			
23-21-35	SPRING, Outside Rear View Mirror Backing Plate					
	All	1	⊟2299 527	⊟2299 527	⊟2299 527	
23-21-44	GASKET, Instrument Panel Rear View Mirror Base					
	P, D	1	---- ---	---- ---	2520 993	

TYPE LETTERS Indicate: V - Valiant, L - Dart, R - Belvedere, W - Coronet, P - Plymouth, D - Dodge, C - Chrysler, Y - Imperial

★Indicates use as required.
⊟Indicates parts not listed in any previous parts book.
March 1966 Supersedes May 1965.

Printed in U.S.A.
Prices and specifications subject to change without notice.
Right and left part numbers are on same line, first number is right, second number is left.
* Indicates change or addition.

MyMopar.com

CODE	PART NAME AND DESCRIPTION	PER CAR	VALIANT / DART	PLYMOUTH BELVEDERE / DODGE CORONET	PLYMOUTH FURY / DODGE POLARA / CHRYSLER	IMPERIAL
23-21-0	**MIRRORS - Cont'd**					
23-21-45	SHAFT, Rear View Inside Mirror					
	Sta. Wgn. Inst. Panel Mounted . .	1	---- ---	---- ---	2080 875	
	Except Cv. Cp.	1	---- ---	---- ---	---- ---	2161 329
23-21-46	SPRING, Instrument Panel Rear View Mirror Base					
	Sta. Wgn.	1	---- ---	---- ---	1839 966	
23-21-47	PLUG, Instrument Panel Rear View Mirror Base					
	Sta. Wgn.	1	---- ---	---- ---	1839 967	
23-21-48	REINFORCEMENT, Instrument Panel Rear View Mirror Base					
	Sta. Wgn.	1	---- ---	---- ---	2520 995	
23-21-66	BEZEL or NUT, Rear View Outside Mirror Remote Control					
	All	1	2486 556	2080 541	2080 541	
23-21-70	SEAL, Outside Remote Control Rear View Mirror Control Attaching					
	All	1	---- ---	---- ---	---- ---	⊟2520 152
23-21-74	NUT, Rear View Outside Remote Control Mirror Attaching					
	All	1	---- ---	---- ---	---- ---	1901 838
23-22-0	**GARNISH MOULDINGS**					
23-22-53	MOULDING, Quarter Window Garnish					
	V Barracuda Prime	1	2526 782-3			
	Sta. Wgn. Prime	1	---- ---	2424 402-3		
	2 D. H. T., P-P, D-P, C-M, C-P Chrome	1	---- ---	---- ---	2573 792-3	2491 828-9
	2 D. H. T., C-H Use w/Bucket Seats, Chrome	1	---- ---	---- ---	2573 806-7	
	4 D. 6 Wdo., D, C Prime	1	---- ---	---- ---	*2573 572-3	
	4 D. H. T., C-M Chrome	1	---- ---	---- ---	2573 876-7	2571 266-7
	4 D. H. T., C-H Use w/Bucket Seats, Chrome	1	---- ---	---- ---	2573 876-7	
23-22-75	MOULDING, Quarter Panel Belt					
	2 D. H. T. Prime	1	---- ---	2481 258-9		
	Chrome	1	---- ---	2481 588-9		
23-22-78	MOULDING, Tailgate Opening Garnish					
	Sta. Wgn. Prime, Side Upper . . .	1	---- ---	2249 810-1		
	Lower	1	---- ---	2484 832-3		
23-22-86	MOULDING, Rear Window Garnish					
	V Barracuda Side	1	4128-9 VX9			
	4 D., D, C Prime, Upper	1	---- ---	---- ---	2482 308	
	Upper Corner	1	---- ---	---- ---	2528 310-1	
	Side	1	---- ---	---- ---	2482 310-1	
	2 D. H. T., L Prime, Side and Upper .	1	2484 136-7	2424 834-5		
	2 D., 4 D., L Prime, Side and Upper .	1	2484 136-7			
	2 D. H. T., P, D, C-L, C-M, C-P Chrome, Side and Upper.	1	---- ---	2424 838-9	2528 386-7	
	4 D. H. T. Chrome, Upper	1	---- ---	---- ---	2528 070	
	Upper Corner	1	---- ---	---- ---	2528 772-3	
	Side	1	---- ---	---- ---	*2605 422-3	
	2 D. H. T., C-H Chrome, Upper	1	---- ---	---- ---	2528 070	
	Upper Corner	1	---- ---	---- ---	2528 772-3	
	Side	1	---- ---	---- ---	*2605 422-3	

TYPE LETTERS Indicate: V - Valiant, L - Dart, R - Belvedere, W - Coronet, P - Plymouth, D - Dodge, C - Chrysler, Y - Imperial

★Indicates use as required.
⊟Indicates parts not listed in any previous parts book.
Right and left part numbers are on same line, first number is right, second number is left.
* Indicates change or addition.

Printed in U.S.A.
Prices and specifications subject to change without notice.
March 1966 Supersedes May 1965.

MyMopar.com

CODE	PART NAME AND DESCRIPTION		PER CAR	VALIANT / DART	PLYMOUTH BELVEDERE / DODGE CORONET	PLYMOUTH FURY / DODGE POLARA / CHRYSLER	IMPERIAL
23-22-0	**GARNISH MOULDINGS - Cont'd**						
23-22-86	MOULDING - Cont'd						
	4 D. H. T., D-C	Prime, Upper	1	---- ---	---- ---	2482 297	
		Upper Corner	1	---- ---	---- ---	2528 308-9	
		Side	1	---- ---	---- ---	2482 304-5	
	2 D. H. T., except C-H						
		Prime, Side and Upper	1	---- ---	---- ---	2482 302-3	
	2 D. H. T., C-H	Prime, Upper	1	---- ---	---- ---	2482 297	
		Upper Corner	1	---- ---	---- ---	2528 308-9	
		Side	1	---- ---	---- ---	2482 304-5	
	Y-H	Upper, Side and Lower, Chrome	1	---- ---	---- ---	---- ---	2492 232-3
	2 D. H. T.	Upper, Side and Lower, Chrome	1	---- ---	---- ---	---- ---	2492 232-3
	4 D. H. T., Y-M	Chrome, Upper	1	---- ---	---- ---	---- ---	2492 110-1
		Side	1	---- ---	---- ---	---- ---	2492 112-3
	SCREW	w/Prime Moulding	11	---- ---	6024 338		
	SCREW, P1, 2 D. H. T.,	w/Chrome Moulding	4	---- ---	---- ---	6025 181	
23-22-90	SUPPORT, Rear Window Garnish Moulding						
	All	"L" Shaped	18	---- ---	---- ---	---- ---	2492 148
		"U" Shaped	10	---- ---	---- ---	---- ---	2492 149
23-22-145	MOULDING, Windshield Garnish						
	NOTE: See Part Type Code 23-113-52 for Lower Finish Strip.						
	2 D. H. T., V	Side, Gold	1	*3706-7AY6			
	2 D. H. T., L-H	Side, Turquoise	1	3706-7AQ6			
		Gold	1	3706-7AY6			
	2 D. H. T., L-P	Side, Gold	1	*3706-7AY6			
	NOTE: For colors not shown for above Mouldings, specify Gold and paint as required.						
	4 D., Sta. Wgn., 2 D., L-L, L-H,	Side, Tan	1	*3708-9BT6			
	Cv. Cp.	Chrome, Upper	1	2422 428			
	SCREW		2	6024 400			
	MOULDING, Windshield Garnish Side		1	2424 108-9			
	SCREW		4	6023 938			
	MOULDING, Windshield Garnish						
	Except Cv. Cp.	Prime, Upper	1	---- ---	2218 612		
		Side	1	---- ---	2218 620-1		
	4 D., Sta. Wgn., 2 D.	Prime, Upper Corner	1	---- ---	2570 538-9		
	Sp. Cl. Cp.	Prime, Upper Corner	1	---- ---	2570 532-3		
	Sp. Cl. Cp.	Chrome, Upper	1	---- ---	2491 902		
		Upper Corner	1	---- ---	2218 610-1		
		Side	1	---- ---	2218 616-7		
	Cv. Cp.	Chrome, Upper	1	---- ---	2480 171		
		Upper Corner	1	---- ---	2480 176-7		
		Side	1	---- ---	2528 020-1		
	All	Prime, Lower	1	---- ---	2217 752-3		
	CLIP	Upper	4	---- ---	⊟6000 967		
	P	Prime, Side Lower	1	---- ---	---- ---	2492 728-9	
	D	Prime, Side Lower	1	---- ---	---- ---	2492 858-9	
	P	Chrome, Lower Corner	1	---- ---	---- ---	2571 802-3	

TYPE LETTERS Indicate: V - Valiant, L - Dart, R - Belvedere, W - Coronet, P - Plymouth, D - Dodge, C - Chrysler, Y - Imperial

★Indicates use as required.
⊟Indicates parts not listed in any previous parts book.

Printed in U.S.A.
Prices and specifications subject to change without notice.
Right and left part numbers are on same line, first number is right, second number is left.
* Indicates change or addition

MyMopar.com

CODE	PART NAME AND DESCRIPTION	PER CAR	VALIANT / DART	PLYMOUTH BELVEDERE / DODGE CORONET	PLYMOUTH FURY / DODGE POLARA / CHRYSLER	IMPERIAL
23-22-0	**GARNISH MOULDINGS - Cont'd**					
23-22-145	MOULDING - Cont'd					
	Cv. Cp., D-L — Chrome, Side Lower	1	---- ---	---- ---	2571 804-5	
	4 D. H. T., 2 D. H. T., Cv. Cp., D-H, D-P — Chrome, Side Lower	1	---- ---	---- ---	2571 804-5	
	4 D. H. T., P — Chrome, Side	1	---- ---	---- ---	2571 490-1	
	C-H, Sta. Wgn. — Chrome Upper	1	---- ---	---- ---	2571 258	
	C, Sta. Wgn. — Chrome Side	1	---- ---	---- ---	2664 238-9	
	Except Cv. Cp. — Prime, Upper	1	---- ---	---- ---	2492 497	
	4 D., Sta. Wgn., 2 D. — Prime, Side	1	---- ---	---- ---	2492 498-9	
	4 D. H. T., 2 D. H. T. — Side, Prime	1	---- ---	---- ---	2492 560-1	
	Chrome	1	---- ---	---- ---	2571 488-9	
	4 D. H. T., 2 D. H. T. — Upper, Chrome	1	---- ---	---- ---	2571 258	
	Cv. Cp. — Upper, Chrome	1	---- ---	---- ---	2481 846	
	Cv. Cp. — Side, Chrome	1	---- ---	---- ---	2481 848-9	
	C — Side Lower, Prime	1	---- ---	---- ---	2492 860-1	
	C-H, Sta. Wgn. — Side Lower, Chrome	1	---- ---	---- ---	2571 806-7	
	Cv. Cp., C-L, C-M — Side Lower, Prime	1	---- ---	---- ---	2492 860-1	
	Sta. Wgn., C-H — Side Lower, Prime	1	---- ---	---- ---	2492 860-1	
	4 D. H. T., 2 D. H. T., Cv. Cp., C-M, C-H — Side Lower, Prime	1	---- ---	---- ---	2492 860-1	
	Cv. Cp., C-L — Side Lower, Chrome	1	---- ---	---- ---	2571 806-7	
	4 D. H. T., 2 D. H. T., Cv. Cp., C-M, C-H — Side Lower, Chrome	1	---- ---	---- ---	2571 806-7	
	2 D. H. T., P — Chrome, Side	1	---- ---	---- ---	2571 488-9	
	4 D. H. T., 2 D. H. T., D-H, D-P — Chrome, Side	1	---- ---	---- ---	2571 488-9	
	4 D. H. T., 2 D. H. T., C-M, C-H — Chrome, Side	1	---- ---	---- ---	2571 488-9	
	4 D. H. T., 2 D. H. T. — Chrome, Upper	1	---- ---	---- ---	---- ---	2080 782-3
	Upper Corner	1	---- ---	---- ---	---- ---	1901 974-5
	Side	1	---- ---	---- ---	---- ---	1901 996-7
	Cv. Cp. — Chrome, Upper	1	---- ---	---- ---	---- ---	2093 619
	Side	1	---- ---	---- ---	---- ---	1901 998-9
	All — Prime, Lower	1	---- ---	---- ---	---- ---	2218 890-1
	RETAINER	4	---- ---	---- ---	⊟6001 698	
	MOULDING, Windshield Garnish Side Auxiliary					
	2 D. H. T., P — Prime	1	---- ---	---- ---	2492 726-7	
	Chrome	1	---- ---	---- ---	2571 534-5	
	4 D. H. T., 2 D. H. T., D — Prime	1	---- ---	---- ---	2492 726-7	
	4 D. H. T., 2 D. H. T., C — Prime	1	---- ---	---- ---	2492 520-1	
	4 D. H. T., P — Chrome	1	---- ---	---- ---	2571 538-9	
	4 D. H. T., 2 D. H. T., D-H, D-P — Chrome	1	---- ---	---- ---	2571 534-5	
	4 D. H. T., 2 D. H. T., C-M, C-P, C-H — Chrome	1	---- ---	---- ---	2571 532-3	
23-22-148	COVER, Windshield Garnish Moulding Center Joint					
	All — Prime, Lower	1	---- ---	---- ---	---- ---	2218 892
23-22-151	SUPPORT, Windshield Garnish Moulding					
	All — Side	4	---- ---	2570 530		
23-22-152	SPACER, Windshield Upper Garnish Moulding					
	4 D. H. T., 2 D. H. T.	6	---- ---	---- ---	---- ---	1901 973

TYPE LETTERS Indicate: V - Valiant, L - Dart, R - Belvedere, W - Coronet, P - Plymouth, D - Dodge, C - Chrysler, Y - Imperial

★Indicates use as required.

⊟Indicates parts not listed in any previous parts book.

Right and left part numbers are on same line, first number is right, second number is left.

* Indicates change or addition.

Printed in U.S.A.

Prices and specifications subject to change without notice.

March 1966 Supersedes May 1965.

MyMopar.com

CODE	PART NAME AND DESCRIPTION	PER CAR	VALIANT / DART	PLYMOUTH BELVEDERE / DODGE CORONET	PLYMOUTH FURY / DODGE POLARA / CHRYSLER	IMPERIAL
23-22-0	**GARNISH MOULDINGS - Cont'd**					
23-22-155	EXTENSION, Windshield Side Garnish Moulding Lower					
	All Prime	1	---- ---	2492 032-3		
	2 D. H. T., Cv. Cp., R-H, R-P, W-H, W-P Chrome	1	---- ---	2492 036-7		
23-23-0	**OUTSIDE FINISH MOULDINGS**					
23-23-2	MOULDING, Body Side Sill Finish (1)					
23-23-11	SPACER, Deck Opening Upper Finish Panel V Barracuda	2	2529 110			
23-23-13	OVERLAY, Body Outside Panel Finish (1)					
23-23-14	MOULDING, Front Pillar Finish (1) Cv. Cp.	1	---- ---	---- ---	---- ---	2093 136-7
23-23-16	PANEL, Center Pillar Upper Finish (1)					
23-23-17	PANEL, Deck Opening Upper Finish (1)					
23-23-23	MOULDING, Deck Opening Lower Panel Finish (1)					
23-23-27	SEAL, Quarter Window Upper and Rear Moulding 4 D. 6 Window, lgh. 27", width 1/2", 1/8 thk.	2	---- ---	---- ---	*2573 791	
	SEAL, Roof Side Extension Belt Moulding 4 D. H. T., D-H	2	---- ---	---- ---	2602 616	
	SEAL, Quarter Window Outside Rear and Upper Moulding 4 D. 6 Window, lgh. 27", width 3/4", 1/8 thk.	2	---- ---	---- ---	*2602 887	
	GASKET, Deck Opening Upper Side Moulding Seal Inner Barracuda	2	2602 623			
23-23-28	PANEL, Deck Opening Lower Panel Finish (1)					
23-23-30	MOULDING, INSERT or PANEL, Deck List Finish (1)					
23-23-31	MOULDING, Deck Opening Upper Panel Finish (1)					
23-23-32	MOULDING, Front Door Outside Finish (1)					
23-23-33	MOULDING, Rear Door Outside Finish (1)					
23-23-39	MOULDING, Quarter Panel Outside Finish (1)					
23-23-41	CAP or COVER, Body Outside Finish Moulding (1)					
23-23-42	MOULDING, Roof Panel Outside Finish (1)					
23-23-49	MOULDING, Folding Top Outside Finish (1)					
23-23-52	MOULDING, Rear Window Outside Finish (1)					
23-23-60	MOULDING, Tailgate Opening Outside Finish (1)					
23-23-61	MOULDING PACKAGE, Tailgate Outside Finish (1)					

NOTE 1: See Exterior Moulding Illustrations and Moulding Legends in front of Group 23 Body section.

TYPE LETTERS Indicate: V - Valiant, L - Dart, R - Belvedere, W - Coronet, P - Plymouth, D - Dodge, C - Chrysler, Y - Imperial

★Indicates use as required.
⊟Indicates parts not listed in any previous parts book.

MyMopar.com

CODE	PART NAME AND DESCRIPTION	PER CAR	VALIANT / DART	PLYMOUTH BELVEDERE / DODGE CORONET	PLYMOUTH FURY / DODGE POLARA / CHRYSLER	IMPERIAL
23-23-0	**OUTSIDE FINISH MOULDINGS - Cont'd**					
23-23-63	ANTI-RATTLER, Tailgate Outside Belt Moulding to Glass Sta.Wgn.	1	---- ---	---- ---	2602 043	
23-23-65	MOULDING, Windshield Outside Finish (1)					
23-23-66	CAP, Windshield Outside Finish Moulding Joint (1)					
23-23-73	MOULDING, Quarter Window Outside Finish (1)					
23-23-74	CAP, Quarter Window Outside Finish (1)					
23-23-77	PANEL and NAME LETTERS, Tailgate Outside Finish (1)					
23-23-80	PANEL, Front Door Outside Panel Finish (1)					
23-23-85	PANEL, Quarter Outside Panel Finish (1)					
23-26-0	**TRIM FINISH MOULDINGS**					
23-26-2	MOULDING, Quarter Arm Rest					
	Cv. Cp., Y-M	1	---- ---	---- ---	---- ---	2440 796-7
	2 D. H. T., Y-M	1	---- ---	---- ---	---- ---	2440 794-5
23-26-6	INSERT, Rear Door Arm Rest Side Finish Plate					
	4 D. H. T., 4 D. 6 Window, Sta. Wgn., C-H	2	---- ---	---- ---	2572 962	
	2 D. H. T., 4 D. H. T., 4 D. 6 Window, Sta. Wgn., C-H Front	2	---- ---	---- ---	2572 962	
	INSERT, Quarter Arm Rest Side Finish Plate					
	2 D. H. T., C-H	2	---- ---	---- ---	2589 772	
23-26-13	RETAINER, Rear Pillar Garnish Moulding					
	Sta.Wgn. Upper	2	---- ---	---- ---	2529 142	
23-26-14	MOULDING, Rear Pillar Garnish					
	Sta.Wgn. Upper	1	---- ---	---- ---	2528 054-5	
	Lower	1	---- ---	---- ---	2529 134-5	
	MOULDING, Body Lock Pillar Garnish					
	Sta.Wgn., w/SPACER, Upper, Prime	1	---- ---	---- ---	2573 188-9	
23-26-18	PANEL, Body Lock Pillar Inside Finish					
	2 D., P	1	---- ---	2216 448-9	2528 438-9	
23-26-23	MOULDING, Door Trim Panel					
	V Barracuda Upper Retainer	1	2589 746-7			
	2 D., 2 D.H.T., Cv. Cp. Upper Retainer	1	2589 746-7			
	2 D. H. T., Cv. Cp., L-P Lower	2	2419 310			
	4 D., Sta.Wgn. Front, Upper Retainer . .	1	2292 744-5			
	4 D., Sta.Wgn. Rear, Upper Retainer . .	1	2292 742-3			
	2 D. H. T., Cv. Cp., W-P	2	---- ---	⊟2499 788		
	2 D. H. T., Cv. Cp., W-P Intermediate	2	---- ---	⊟2499 789		
	2 D. H. T., Cv. Cp., W-P Frt. End	1	---- ---	⊟2499 766-7		
	2 D. H. T., Cv. Cp., W-P Rr. End	2	---- ---	⊟2499 853		
	2 D. H. T., Cv. Cp., D-H	2	---- ---	---- ---	⊟2499 469	

NOTE 1: See Exterior Moulding Illustrations and Moulding Legends in front of Group 23 Body section.

TYPE LETTERS Indicate: V - Valiant, L - Dart, R - Belvedere, W - Coronet, P - Plymouth, D - Dodge, C - Chrysler, Y - Imperial

★Indicates use as required.
⊟Indicates parts not listed in any previous parts book.
Right and left part numbers are on same line, first number is right, second number is left.
* Indicates change or addition.

Printed in U.S.A.
Prices and specifications subject to change without notice.
March 1966 Supersedes May 1965.

MyMopar.com

CODE	PART NAME AND DESCRIPTION	PER CAR	VALIANT / DART	PLYMOUTH BELVEDERE / DODGE CORONET	PLYMOUTH FURY / DODGE POLARA / CHRYSLER	IMPERIAL
23-26-0	**TRIM FINISH MOULDINGS - Cont'd**					
23-26-23	MOULDING - Cont'd					
	2 D. H. T., 4 D., 4 D. H. T., Sta. Wgn., P-H Front, Front	1	---- ---	---- ---	2499 648-9	
	2 D. H. T., P-H, Rear	1	---- ---	---- ---	2572 462-3	
	2 D. H. T., Cv. Cp., P-P Upper	1	---- ---	---- ---	2572 674-5	
	2 D. H. T., D-P Finish Plate	1	---- ---	---- ---	2572 366-7	
	2 D. H. T., Cv. Cp., 4 D. H. T., C-M Front, Finish Plate	2	---- ---	---- ---	2499 545	
	2 D. H. T., Cv. Cp., C-P Front, Finish Plate	2	---- ---	---- ---	2499 545	
	4 D., 4 D. H. T., P-H, Rear, Rear	2	---- ---	---- ---	2499 654	
	4 D., 4 D. H. T., P-H, Rear, Front	1	---- ---	---- ---	2499 652-3	
	4 D., 4 D. H. T., Sta. Wgn., P-H Front, Rear	1	---- ---	---- ---	2499 650-1	
	Sta. Wgn., P-H, Rear, Rear	1	---- ---	---- ---	2572 464-5	
	2 D. H. T., D-P Lower	2	---- ---	---- ---	2572 744	
	4 D., 4 D. H. T., Sta. Wgn., C-L Front, Upper	1	---- ---	---- ---	2499 384-5	
	4 D. H. T., C-M Rear, Upper Rt	1	---- ---	---- ---	2499 624	
	2 D. H. T., Cv. Cp., C-M Upper	1	---- ---	---- ---	2499 542-3	
	4 D. H. T., C-M Front, Upper	1	---- ---	---- ---	2499 622-3	
	4 D., 4 D. H. T., Sta. Wgn., C-H Rear	1	---- ---	---- ---	*2499 436-7	
	4 D., 4 D. H. T., Sta. Wgn., C-H Rear Arm Rest Side, Finish Plate	2	---- ---	---- ---	2589 016	
	2 D. H. T., 4 D. H. T., 4 D., Sta. Wgn., C-H Front Arm Rest, Finish Plate	2	---- ---	---- ---	2589 016	
	4 D. H. T., 4 D., Sta. Wgn., C-H Rear Arm Rest, w/Bucket Seats, Finish Plate	1	---- ---	---- ---	2572 964-5	
	4 D., 4 D. H. T., Sta. Wgn. Rear, Upper, C-L	1	---- ---	---- ---	*2499 386-7	
	2 D. H. T., Cv. Cp., 4 D. H. T. Front Arm Rest	1	---- ---	---- ---	---- ---	2572 742-3
	4 D. H. T. Rear Arm Rest	1	---- ---	---- ---	---- ---	2440 792-3
	4 D. H. T., Y-M Front, Finish Plate	1	---- ---	---- ---	---- ---	2572 884-5
	4 D. H. T., Y-M Rear, Finish Plate	1	---- ---	---- ---	---- ---	2572 886-7
	4 D. H. T., Y-H Front, Finish Plate, w/INSERT	1	---- ---	---- ---	---- ---	2572 824-5
	4 D. H. T., Y-H Rear, Finish Plate, w/INSERT	1	---- ---	---- ---	---- ---	2572 830-1
	2 D. H. T., Cv. Cp. Finish Plate, Upper	1	---- ---	---- ---	---- ---	2572 848-9
	4 D. H. T. Front, Lower	1	---- ---	---- ---	---- ---	*2490 812-3
	4 D. H. T. Rear, Lower	1	---- ---	---- ---	---- ---	*2490 810-1
23-26-26	NUT, Front Door Arm Rest Moulding Stud 2 D. H. T., Cv. Cp., except C-H	6	---- ---	---- ---	1839 995	
	RETAINER, Door and Quarter Arm Rest Side Finish Plate 2 D. H. T., 4 D., 4 D. H. T., Sta. Wgn., C-H	★	---- ---	---- ---	2572 968	
23-26-33	ORNAMENT, Front Seat Side Shield All	2	---- ---	---- ---	---- ---	2494 142

TYPE LETTERS Indicate: V - Valiant, L - Dart, R - Belvedere, W - Coronet, P - Plymouth, D - Dodge, C - Chrysler, Y - Imperial

★Indicates use as required.
⊟Indicates parts not listed in any previous parts book.
March 1966 Supersedes May 1965.

Printed in U.S.A.
Prices and specifications subject to change without notice.
Right and left part numbers are on same line first number is right, second number is left.
* Indicates change or addition.

MyMopar.com

CODE	PART NAME AND DESCRIPTION	PER CAR	VALIANT / DART	PLYMOUTH BELVEDERE / DODGE CORONET	PLYMOUTH FURY / DODGE POLARA / CHRYSLER	IMPERIAL
23-26-0	**TRIM FINISH MOULDINGS - Cont'd**					
23-26-35	RETAINER, Back of Front Seat Back Moulding					
	4 D. H. T.	1	---- ---	---- ---	---- ---	2577 111
	CLIP, Shelf Panel Shroud Moulding					
	2 D. H. T., P, D	6	---- ---	---- ---	2656 520	
	2 D. H. T., 4 D. H. T., C	6	---- ---	---- ---	2656 520	
23-26-41	MOULDING, Roof Side Rail Inside Finish					
	2 D. H. T., L Prime	1	2244 180-1			
	2 D. H. T., V Prime	1	2243 870-1			
	V Barracuda Prime	1	2526 780-1			
	Sta. Wgn., w/A/Cond. Prime	1	---- ---	---- ---	*2603 352-3	
	2 D. H. T. Rear, Chrome	1	---- ---	2424 850-1		
	2 D. H. T. Chrome	1	---- ---	2481 584-5		
	4 D. H. T., P Chrome	1	---- ---	---- ---	2528 340-1	
	4 D. H. T., P Rear, Chrome	1	---- ---	---- ---	2528 348-9	
	2 D. H. T., except C-H Front, Chrome	1	---- ---	---- ---	2528 060-1	
	2 D. H. T., except C-H Rear, Chrome	1	---- ---	---- ---	2528 334-5	
	2 D. H. T., C-H Front, Chrome	1	---- ---	---- ---	2528 034-5	
	4 D. H. T., D, C, Y-H Front, Chrome	1	---- ---	---- ---	2528 034-5	2588 012-3
	Sta. Wgn., w/o A/Cond. Prime	1	---- ---	---- ---	*2483 860-1	
	2 D. H. T., 4 D. H. T., Y-M Front, Chrome	1	---- ---	---- ---	---- ---	2571 460-1
	4 D. H. T., D, C Front, Prime	1	---- ---	---- ---	2482 320-1	
	2 D. H. T., C-H Front, Prime	1	---- ---	---- ---	2482 320-1	
	2 D. H. T., P, D, C-L, C-M, C-P Front, Prime	1	---- ---	---- ---	2482 312-3	
	2 D. H. T., P, D, C-L, C-M, C-P Rear, Prime	1	---- ---	---- ---	2482 314-5	
	2 D. H. T., P, D, C-M, C-P Front, Chrome	1	---- ---	---- ---	2528 060-1	
	4 D. H. T., D, C Rear, Lower, Chrome	1	---- ---	---- ---	2529 034-5	
	2 D. H. T., C-H Rear, Lower, Chrome	1	---- ---	---- ---	2529 032-3	
	2 D. H. T. Chrome, Rear	1	---- ---	---- ---	---- ---	2491 832-3
	4 D. H. T. Chrome, Rear	1	---- ---	---- ---	---- ---	2491 834-5
	4 D. H. T., D, C Prime, Rear	1	---- ---	---- ---	2574 704-5	
23-26-42	COVER, Roof Side Rail Inside Moulding Joint					
	2 D. H. T., except C-H Rear, Chrome	2	---- ---	---- ---	2528 527	
	2 D. H. T., C-H Rear, Chrome	2	---- ---	---- ---	2484 071	
	4 D. H. T., D, C-M, C-H Rear, Chrome	2	---- ---	---- ---	2484 071	
	4 D. H. T., D, C Rear, Prime	2	---- ---	---- ---	2484 070	
	2 D. H. T., C-H Rear, Prime	2	---- ---	---- ---	2484 070	
	2 D. H. T., P, D-L, D-H, C-L, C-M, C-P Rear, Prime	2	---- ---	---- ---	2528 526	
23-26-43	MOULDING, Shelf Trim Panel Rear					
	All Black, Paint as Required	1	---- ---	---- ---	1320 AX9	
23-26-45	MOULDING, Front Seat Back Shield					
	V Barracuda Rear Seat Back, Side	1	2528 008-9			
	Rear Seat Back, Upper	1	2528 010			
	Rear Seat Back, Side Upper	1	2581 442-3			
	4 D. H. T., C-M, C-H	1	---- ---	---- ---	2494 166-7	

TYPE LETTERS Indicate: V - Valiant, L - Dart, R - Belvedere, W - Coronet, P - Plymouth, D - Dodge, C - Chrysler, Y - Imperial

★Indicates use as required.
⊟Indicates parts not listed in any previous parts book.
Right and left part numbers are on same line, first number is right, second number is left.
* Indicates change or addition.

Printed in U.S.A.
Prices and specifications subject to change without notice.
March 1966 Supersedes May 1965.

MyMopar.com

CODE	PART NAME AND DESCRIPTION	PER CAR	VALIANT / DART	PLYMOUTH BELVEDERE / DODGE CORONET	PLYMOUTH FURY / DODGE POLARA / CHRYSLER	IMPERIAL
23-26-0	**TRIM FINISH MOULDINGS - Cont'd**					
23-26-45	MOULDING - Cont'd					
	2 D. H. T., Cv. Cp., C-M, C-H, C-P	1	---- ---	---- ---	2494 166-7	
	Sta. Wgn., C3	1	---- ---	---- ---	2494 166-7	
	2 D. H. T., Cv. Cp., 4 D. H. T.	1	---- ---	---- ---	---- ---	2494 121-2
23-26-46	PANEL, Quarter Inside Finish					
	Sta. Wgn. Prime	1	2292 488-9			
	2 D., V Prime	1	2422 458-9			
	2 D., 2 D. H. T., L Prime	1	2244 416-7			
	2 D. H. T., V Prime	1	2422 462-3			
	PANEL, Rear Compartment Inner Side					
	V Barracuda	1	2528 306-7			
	FINISH PLATE, Quarter Arm Rest Side					
	2 D. H. T., C-H w/INSULATOR	1	---- ---	---- ---	⊟2572 982-3	
	w/o Insulator	2	---- ---	---- ---	⊟2589 017	
	FINISH PLATE, Quarter Trim Panel					
	2 D. H. T., D-P, Y	★	---- ---	---- ---	2572 368	2572 852-3
	Cv. Cp., Y Upper	1	---- ---	---- ---	---- ---	2572 854-5
	PANEL, Quarter Belt Inside Finish					
	V Barracuda Prime, Front	1	2526 776-7			
	Rear	1	2526 778-9			
23-26-47	MOULDING, Rear Quarter Trim Panel Finish					
	V Barracuda Security Compartment					
	Panel Upper	1	2527 930-1			
	Side	1	2527 926-7			
	2 D., 2 D. H. T. Upper Retaining	1	*2589 748-9			
	V Barracuda Upper Retaining	1	2589 752-3			
	Cv. Cp. Upper Retaining	1	2589 750-1			
	2 D. H. T., W-P Intermediate	2	---- ---	⊟2499 791		
	2 D. H. T., Cv. Cp., W-P					
	Frt. End	2	---- ---	⊟2499 853		
	2 D. H. T., W-P Upper	2	---- ---	⊟2499 790		
	2 D. H. T., R-P Upper	2	---- ---	⊟2589 049		
	2 D. H. T., D-H Rt.	1	---- ---	---- ---	⊟2499 520	
	Cv. Cp., D-H	1	---- ---	---- ---	⊟2572 444-5	
	2 D. H. T., P-H Rear	2	---- ---	---- ---	⊟2572 468	
	Cv. Cp., P-H Rear, Front	1	---- ---	---- ---	2572 466-7	
	2 D. H. T., P-P Upper	1	---- ---	---- ---	2572 676-7	
	2 D. H. T., C-L Upper, Front	2	---- ---	---- ---	2499 570	
	2 D. H. T., C-M, C-P, Upper	1	---- ---	---- ---	2572 934-5	
	Cv. Cp., L-P	1	2440 064-5			
	2 D. H. T., L-P	2	2419 311			
	Sta. Wgn., Wheelhouse and Lower Quarter Trim Cover and Extension Joint	1	---- ---	2419 516-7		
	Sta. Wgn., Wheelhouse Lower Trim Support Lower Side, Prime Right, Rear	1	---- ---	---- ---	2529 120	
	Right, Front	1	---- ---	---- ---	2528 440	
	Left	1	---- ---	---- ---	2528 441	
	MOULDING, Wheelhouse Extension Panel Trim					
	Barracuda w/CLIP	1	2581 286-7			
	MOULDING and SPACER, Body Rear Lock Pillar Wheelhouse Cover					
	Sta. Wgn. w/Air Conditioning	1	---- ---	---- ---	2581 734-5	
	w/o Air Conditioning	1	---- ---	---- ---	2581 880-1	
	MOULDING, Wheelhouse Cover Finish, Sta. Wgn.	1	---- ---	---- ---	*2657 268-9	
	SCREW	14	---- ---	---- ---	⊟6023 898	
23-26-53	SPACER, Roof Rail Inside Finish Moulding					
	2 D. H. T.	12	---- ---	2423 670		

TYPE LETTERS Indicate: V - Valiant, L - Dart, R - Belvedere, W - Coronet, P - Plymouth, D - Dodge, C - Chrysler, Y - Imperial

★Indicates use as required.
⊟Indicates parts not listed in any previous parts book.
March 1966 Supersedes May 1965.

Printed in U.S.A.
Prices and specifications subject to change without notice.
Right and left part numbers are on same line, first number is right, second number is left.
* Indicates change or addition.

MyMopar.com

CODE	PART NAME AND DESCRIPTION	PER CAR	VALIANT / DART	PLYMOUTH BELVEDERE / DODGE CORONET	PLYMOUTH FURY / DODGE POLARA / CHRYSLER	IMPERIAL
23-26-0	**TRIM FINISH MOULDINGS - Cont'd**					
23-26-55	MOULDING and SPACER, Center Pillar Upper Air Conditioning Tube Cover					
	Sta. Wgn. Prime	1	---- ---	---- ---	2581 742-3	
23-26-56	RETAINER, Rear Lock Pillar Wheelhouse Cover Moulding					
	Sta.Wgn., P, D, C	1	---- ---	---- ---	2581 878-9	
23-26-58	CAP, Body Center Pillar					
	4 D. H. T.	1	---- ---	---- ---	2491 192-3	
23-26-69	MOULDING, Tailgate Opening Sill Panel					
	Sta.Wgn.	1	---- ---	---- ---	2527 991	
	Extension	1	---- ---	---- ---	2527 998-9	
23-26-74	MOULDING, Back of Front Seat Back Trim Panel					
	2 D. H. T., D-P, C-L	2	---- ---	---- ---	2577 156	
	4 D. H. T.	1	---- ---	---- ---	---- ---	2577 247
23-26-75	FINISH PLATE, Rear Seat Shroud Medallion					
	2 D. H. T., 4 D. H. T., C	1	---- ---	---- ---	2572 420	
	BASE, Rear Seat Shroud Medallion					
	2 D. H. T., 4 D. H. T., C	1	---- ---	---- ---	2572 418	
23-26-76	MEDALLION, Rear Seat Shroud					
	2 D. H. T., P-P	1	---- ---	---- ---	2572 430	
	2 D. H. T., D-P	1	---- ---	---- ---	2572 433	
	2 D. H. T., C-M, C-P, 4 D. H. T., C-M	1	---- ---	---- ---	2571 425	
	MEDALLION, Rr. Seat Shroud Base					
	2 D. H. T., D-P	1	---- ---	---- ---	⊟2657 665	
	MEDALLION, Seat Back					
	4 D., 4 D. H. T., D-L, Front	1	---- ---	---- ---	2292 452	
	2 D. H. T., 4 D., 4 D. H. T., D-L Rear	1	---- ---	---- ---	2292 452	
	All, D-H Front and Rear	2	---- ---	---- ---	2522 169	
23-26-77	MOULDING, Seat Back Shroud Finish					
	Cv. Cp. Rear	1	---- ---	---- ---	---- ---	2490 754-5
	2 D. H. T. Rear	1	---- ---	---- ---	---- ---	2490 752-3
	2 D. H. T., Cv. Cp. Rear, Center	1	---- ---	---- ---	---- ---	2490 756
	2 D. H. T., P, D, C-M, C-P Rear, Front Center	1	---- ---	---- ---	2572 432	
	4 D. H. T., C-H Rear, Front Center	1	---- ---	---- ---	2572 432	
	2 D. H. T., P-P, D-P, C-M, C-H, C-P Front Side	1	---- ---	---- ---	2581 100-1	
	4 D. H. T., C-H Front Side	1	---- ---	---- ---	2581 100-1	
	2 D. H. T., P-P, D-P, C-M, C-P Rear, Rear, Black	1	---- ---	---- ---	1320 AX9	
	4 D. H. T., C-M Rear, Rear, Black	1	---- ---	---- ---	1320 AX9	
23-26-80	NAME PLATE, Door Garnish					
	2 D., Cv. Cp., V "Signet"	2	2571 687			
	V "Barracuda"	2	2571 292			
	w/RETAINER, 2 D. H. T., Cv. Cp., V-P "Signet Two Hundred"	2	2571 687			
	w/RETAINER, 2 D. H. T., Cv. Cp., L-H "Dart 270"	2	2218 194			
	w/RETAINER, 2 D. H. T., Cv. Cp., L-P "Dart G T"	2	2218 196			
	w/RETAINER, Cv. Cp., V-H "Valiant Two Hundred"	2	2218 192			

TYPE LETTERS Indicate: V - Valiant, L - Dart, R - Belvedere, W - Coronet, P - Plymouth, D - Dodge, C - Chrysler, Y - Imperial

★Indicates use as required.
⊟Indicates parts not listed in any previous parts book.
Right and left part numbers are on same line, first number is right, second number is left.
* Indicates change or addition.

Printed in U.S.A.
Prices and specifications subject to change without notice.
March 1966 Supersedes May 1965.

MyMopar.com

CODE	PART NAME AND DESCRIPTION	PER CAR	VALIANT / DART	PLYMOUTH BELVEDERE / DODGE CORONET	PLYMOUTH FURY / DODGE POLARA / CHRYSLER	IMPERIAL
23-26-0	**TRIM FINISH MOULDINGS - Cont'd**					
23-26-80	NAME PLATE, Door Trim Panel					
	4 D. 6 Window, C1 Front, "Town Sedan" . . .	2	---- ---	---- ---	2572 945	
	2 D. H. T., Cv. Cp., P, "Sport Fury"	2	---- ---	---- ---	2572 459	
	NAME PLATE, Front Door Trim Panel Electric Door Lock					
	4 D., 4 D. H. T., Sta. Wgn.	2	---- ---	---- ---	2589 046	
	MEDALLION, Door Trim Panel					
	R-H	2	---- ---	2572 628		
	2 D. H. T., Cv. Cp., W-P "Coronet 500"	2	---- ---	2572 357		
	W-H "Coronet 440"	2	---- ---	*2572 136		
	2 D. H. T., Cv. Cp. "Satellite"	2	---- ---	2572 683		
	4 D. H. T., C-M "300"	2	---- ---	---- ---	2572 729	
	2 D. H. T., Cv. Cp., C-M, C-P "300"	2	---- ---	---- ---	2572 729	
	REFLECTOR, Front Door Trim Panel					
	2 D. H. T., Cv. Cp., 4 D. H. T., C-M, C-P	2	---- ---	---- ---	2572 718	
	2 D. H. T., Cv. Cp., Y-M	2	---- ---	---- ---	---- ---	2572 718
	BEZEL, Front Door Trim Panel Reflector					
	2 D. H. T., Cv. Cp., 4 D. H. T., C-M, C-P	2	---- ---	---- ---	2572 719	
	2 D. H. T., Cv. Cp., Y-M	2	---- ---	---- ---	---- ---	2572 719
23-26-84	RETAINER PLATE, Rear Seat Back Medallion					
	2 D. H. T., 4 D., 4 D. H. T., D-L	1	---- ---	---- ---	2609 345	
23-26-85	MOULDING, Folding Top Pocket Panel Finish					
	Cv. Cp. Upper	1	2440 006-7	---- ---	---- ---	2490 750-1
	Cv. Cp., L-P Lower	1	2440 008-9			
	Cv. Cp.	1	---- ---	---- ---	---- ---	2581 256
23-26-87	MOULDING, Floor Tunnel Console					
	2 D. H. T., Cv. Cp., P, D-L Rear End Cap.	1	---- ---	2572 817	2572 817	
	2 D. H. T., Cv. Cp., P Lid Center	1	---- ---	2490 609	2490 609	
	2 D. H. T., D Lid Center	1	---- ---	---- ---	2572 517	
	All Lid Front Edge	1	---- ---	2490 610	2490 610	
	All, Side, w/Auto. Trans. and Column Stick	1	---- ---	2499 289	2499 289	
	All, Side, except Column Stick Auto. Trans.	1	---- ---	2490 615	2490 615	
	2 D. H. T., Cv. Cp., 4 D. H. T., C Rear End Cap Medium Blue	1	---- ---	---- ---	4429 AB4	
	Dark Blue	1	---- ---	---- ---	4429 AB8	
	Red	1	---- ---	---- ---	4429 AR7	
	Yellow Tan	1	---- ---	---- ---	4429 AT6	
	White	1	---- ---	---- ---	4429 AW3	
	Black	1	---- ---	---- ---	4429 AX9	
	Yellow Gold	1	---- ---	---- ---	4429 AY3	
	2 D. H. T., Cv. Cp., 4 D. H. T., C Lid Medium Blue	1	---- ---	---- ---	4428 AB4	
	Dark Blue	1	---- ---	---- ---	4428 AB8	
	Red	1	---- ---	---- ---	4428 AR7	
	Yellow Tan	1	---- ---	---- ---	4428 AT6	
	White	1	---- ---	---- ---	4428 AW3	
	Black	1	---- ---	---- ---	4428 AX9	
	Yellow Gold	1	---- ---	---- ---	4428 AY3	
23-26-93	ORNAMENT, Folding Top Dust Boot Cover					
	Cv. Cp.	2	---- ---	---- ---	---- ---	*2401 231

TYPE LETTERS Indicate: V - Valiant, L - Dart, R - Belvedere, W - Coronet, P - Plymouth, D - Dodge, C - Chrysler, Y - Imperial

★Indicates use as required.
⊟Indicates parts not listed in any previous parts book.

Printed in U.S.A.
Prices and specifications subject to change without notice.
Right and left part numbers are on same line, first number is right, second number is left.
* Indicates change or addition.
MyMopar.com

CODE	PART NAME AND DESCRIPTION	PER CAR	VALIANT / DART	PLYMOUTH BELVEDERE / DODGE CORONET	PLYMOUTH FURY / DODGE POLARA / CHRYSLER	IMPERIAL
23-31-0	**PADS, LINERS, INSULATORS, SEALS, ANTI-SQUEAK**					
23-31-33	LINER, Dash					
	All, w/or w/o Heater, w/o Air Conditioning	1	2571 417			
	All, Center, Lower, w/Air Conditioning	1	2588 026			
	All, Center, Upper, w/Air Conditioning	1	2588 023			
	All, w/Air Conditioning	1	2588 024-5			
	All Right	1	---- ---	2241 944		
	Left	1	---- ---	2492 003		
	Center	1	---- ---	2241 943		
	All,w/or w/o Heater, Right	1	---- ---	---- ---	2571 573	
	Left	1	---- ---	---- ---	2571 571	
	All, w/Air Conditioning					
	Center	1	---- ---	---- ---	2571 595-6	
	Right	1	---- ---	---- ---	2571 597	
	All, w/or w/o Heater	1	---- ---	---- ---	---- ---	2571 965
23-31-52	PAD, Quarter Outside Panel to Support					
	2 D. H. T., Cv. Cp.	2	---- ---	---- ---	---- ---	2492 566
23-31-119	PAD, Dash Panel Steering Column Trim					
	All	1	---- ---	---- ---	---- ---	2492 766
23-31-145	WEATHERSTRIP, Cowl to Hood					
	All	1	---- ---	---- ---	---- ---	1751 182
23-31-146	SEAL, Dash Panel to Fender Splash					
	All Upper	2	2216 742			
	w/FASTENER	2	2216 790			
	Side	1	---- ---	2218 754-5		
23-31-205	SILENCER, Roof Panel					
	All, 1/2" x 25 1/2" x 67"	★	1774 621	1774 621	1774 621	1774 621
23-32-0	**PANS, PLUGS AND BODY BUMPERS**					
23-32-6	BRACE, Front Floor Pan No. 1 Hold-Down					
	All w/GUSSET	1	---- ---	---- ---	2493 508-9	
23-32-15	PLUG or BUTTON, Floor Pan					
	3/4" x 1 3/4" Hole	★	2093 981			
	1/4" Hole	★	---- ---	---- ---	2216 829	
	1/2" Hole	★	2094 984	---- ---	2094 984	2094 984
	3/4" Hole	★	---- ---	---- ---	2574 792	
	1" Hole	★	2094 985	2094 985	2094 985	2094 985
	1 3/4" Hole	★	2189 098	2189 098	2189 098	2189 098
	2 1/2" Hole	★	2189 093	2189 093	2189 093	2189 093
	1" Hole	★	---- ---	2481 719		
	1 3/4" Hole	★	---- ---	2424 864		
23-32-17	CROSSMEMBER and SPACER, Front Floor Pan Transmission Mounting					
	All	1	2425 278			
	CROSSMEMBER, Frame Transmission Mounting	1	2260 287	2208 740	2461 670	
	CROSSMEMBER, Front Side Rail					
	Front	1	2081 018	2409 058		
	CROSSMEMBER, Front Suspension Complete	1	2260 609			
	Manual Trans. Floor Mounted					
	R1, W1	1	---- ---	2204 199		
	R2, W2, w/Hemispherical Engine	1	---- ---	2460 975		
	R2, W2, w/o Hemispherical Engine	1	---- ---	2401 057		
	CROSSMEMBER, Shock Absorber and Reinforcement, Floor Pan Rear Center Pan					
	All	1	2253 665			
	CROSSMEMBER, Rear Floor Pan Rear Center	1	2423 719	2166 051		

TYPE LETTERS Indicate: V - Valiant, L - Dart, R - Belvedere, W - Coronet, P - Plymouth, D - Dodge, C - Chrysler, Y - Imperial

★Indicates use as required.
⊟Indicates parts not listed in any previous parts book.
Right and left part numbers are on same line, first number is right, second number is left.
* Indicates change or addition.

Printed in U.S.A.
Prices and specifications subject to change without notice.
March 1966 Supersedes May 1965.

MyMopar.com

23-32-0 PANS, PLUGS AND BODY BUMPERS - Cont'd

CODE	PART NAME AND DESCRIPTION	PER CAR	VALIANT / DART	PLYMOUTH BELVEDERE / DODGE CORONET	PLYMOUTH FURY / DODGE POLARA / CHRYSLER	IMPERIAL
23-32-17	CROSSMEMBER and SPACER, Front Floor Pan Trans. Mounting	1	2425 278			
	CROSSMEMBER and REINFORCEMENT, Rear Floor Pan Rear Shock Absorbers	1	---- ---	2493 551		
	CROSSMEMBER, Front Side Rail Torsion Bar Complete	1	---- ---	2253 384		
	CROSSMEMBER and REINFORCEMENT, Rear Floor Pan Rear, except Sta. Wgn.	1	---- ---	---- ---	2493 251	
	CROSSMEMBER, Rear Floor Pan Rear Sta. Wgn.	1	---- ---	---- ---	2481 810	
	CROSSMEMBER, Rear Floor Pan Rear Shock Absorber	1	---- ---	---- ---	2481 448	
	CROSSMEMBER, Center Floor Pan Extension to Center Floor Pan	1	---- ---	---- ---	2526 952-3	
	EXTENSION, Rear Floor Pan Rear Cross-member, except Sta.Wgn., P	1	---- ---	---- ---	2481 434-5	
	D	1	---- ---	---- ---	2484 376-7	
	EXTENSION, w/NUT, Sta. Wgn., Right	1	---- ---	---- ---	2602 128	
	Left	1	---- ---	---- ---	2484 303	
	C, except Sta.Wgn.	1	---- ---	---- ---	2482 640-1	
23-32-18	SCREW and WASHER, Front Suspension Crossmember					
	All	4	2467 693	2467 693		
23-32-22	PAN, Front Floor					
	All, V	1	2529 939	2529 986	2484 519	
	Sta.Wgn., L	1	2529 939			
	L, except Sta.Wgn.	1	2573 191			
23-32-24	PAN, Center Floor					
	All	1	2484 674	2165 811		
	Sta. Wgn.	1	---- ---	---- ---	2483 909	
	Except Sta.Wgn.	1	---- ---	---- ---	2481 387	
23-32-25	EXTENSION, Center Floor Pan					
	L, except Sta.Wgn.	1	2244 618-9			
	All Front	1	---- ---	2483 420-1		
	Sta.Wgn., P Front	1	---- ---	---- ---	2481 812-3	
	P, except Sta.Wgn. Front	1	---- ---	---- ---	2481 400-1	
	All, D Front	1	---- ---	---- ---	2481 812-3	
	Sta.Wgn., C Front	1	---- ---	---- ---	2481 812-3	
	C, except Sta.Wgn. Front	1	---- ---	---- ---	2481 402-3	
23-32-27	REINFORCEMENT, Front Floor Pan Seat Guide					
	All Front	1	2081 808-9	2166 082-3		
	Rear	1	2081 810-1	2166 084-5		
	REINFORCEMENT, Front Floor Pan Seat Attaching					
	2 D. H. T., Cv. Cp., R-P, W-P					
	Front, Rt.	1	---- ---	2252 284		
	Rear, Rt.	1	---- ---	2252 286		
23-32-29	COVER, Front Floor Pan Gearshift Opening					
	All	1	2481 593	2481 594	2484 987	
23-32-31	BRACE, Front Crossmember to Front Suspension Crossmember					
	All	1	2401 036	2401 041		

TYPE LETTERS Indicate: V - Valiant, L - Dart, R - Belvedere, W - Coronet, P - Plymouth, D - Dodge, C - Chrysler, Y - Imperial

★Indicates use as required.
⊟Indicates parts not listed in any previous parts book.
March 1966 Supersedes May 1965.

Printed in U.S.A.
Prices and specifications subject to change without notice.
Right and left part numbers are on same line, first number is right, second number is left.
* Indicates change or addition.

MyMopar.com

23-32-0 PANS, PLUGS AND BODY BUMPERS - Cont'd

CODE	PART NAME AND DESCRIPTION	PER CAR	VALIANT / DART	PLYMOUTH BELVEDERE / DODGE CORONET	PLYMOUTH FURY / DODGE POLARA / CHRYSLER	IMPERIAL
23-32-33	BRACKET, Rear Floor Pan Diagonal Brace					
	2 D., 2 D. H. T., 4 D., L	1	2422 960			
	2 D. H. T.	1	---- ---	2480 634		
23-32-35	BRACKET, Front Floor Pan Transmission Selector					
	2 D. H. T., Cv. Cp.	1	---- ---	2484 169		
23-32-39	BRACKET, Front Floor Pan to Center Cushion Side					
	All	2	---- ---	---- ---	---- ---	2484 145
23-32-40	BRACKET, Rear Floor Pan Rear Seat Back Attaching					
	Cv. Cp., L, R	2	2255 822	2254 097		
	Cv. Cp., W	2	---- ---	2244 411		
	BRACKET, Floor Pan Rear Seat Back Outer Mounting					
	2 D. H. T., 4 D. H. T., w/Weld NUT	2	---- ---	---- ---	---- ---	2480 342
23-32-46	PANEL, Center Floor Pan Cover					
	V Barracuda	1	2484 914			
	Sta. Wgn. Front	1	2243 886			
	Sta. Wgn. Rear	1	2243 323			
	Sta. Wgn. Center	1	2484 150	2251 902		
	PANEL, Rear and Center Floor Pan Insert w/HINGE	1	---- ---	2254 677		
	PANEL and SUPPORT, Center and Rear Floor Pan Cover					
	Sta. Wgn.	1	---- ---	---- ---	2493 938	
23-32-48	PAN, Rear Floor					
	All	1	2423 718	---- ---	---- ---	2480 576
	Except Sta. Wgn.	1	---- ---	2484 495	2481 390	
	Sta. Wgn.	1	---- ---	2166 065	2481 824	
	Sta. Wgn., Rear Panel	1	---- ---	---- ---	2484 064	
23-32-49	EXTENSION and CROSSMEMBER, Rear Floor Pan Side Rear Outer					
	Sta. Wgn.	1	2425 288-9			
	V, except Sta. Wgn.	1	*2425 272-3			
	L, except Sta. Wgn., Quarter Panel to Rear Floor Pan	1	2425 274-5			
	EXTENSION, Rear Floor Pan					
	W, except Sta. Wgn., to Quarter Outside Panel	1	---- ---	2482 564-5		
	Sta. Wgn.	1	---- ---	2251 526		
	P, except Sta. Wgn. Side	1	---- ---	---- ---	2481 450-1	
	D, except Sta. Wgn. Side	1	---- ---	---- ---	2481 814-5	
	C, except Sta. Wgn. Side, Front	1	---- ---	---- ---	2484 000-1	
	Side, Rear	1	---- ---	---- ---	2481 452-3	
	All Side	1	---- ---	---- ---	---- ---	2480 572-3
	Side, Top	1	---- ---	---- ---	---- ---	2480 574-5
23-32-50	BRACE, Rear Floor Pan Cover Panel at Tailgate Opening Sill Reinforcement					
	Sta. Wgn. 2 Seater	2	---- ---	2254 666		
23-32-51	BUMPER, Rear Floor Pan Cover Panel					
	Sta. Wgn. 2 Seater	9	---- ---	2254 661	2094 618	

TYPE LETTERS Indicate: V - Valiant, L - Dart, R - Belvedere, W - Coronet, P - Plymouth, D - Dodge, C - Chrysler, Y - Imperial

★Indicates use as required.
⊟Indicates parts not listed in any previous parts book.
Right and left part numbers are on same line, first number is right, second number is left.
* Indicates change or addition.

Printed in U.S.A.
Prices and specifications subject to change without notice.
March 1966 Supersedes May 1965.

MyMopar.com

CODE	PART NAME AND DESCRIPTION	PER CAR	VALIANT / DART	PLYMOUTH BELVEDERE / DODGE CORONET	PLYMOUTH FURY / DODGE POLARA / CHRYSLER	IMPERIAL
23-32-0	**PANS, PLUGS AND BODY BUMPERS - Cont'd**					
23-32-51	BUMPER, Floor Pan Cover Panel 2nd Seat Back					
	Sta. Wgn.	2	2482 908	2482 908	2276 804	
	SCREW	2	---- ---	---- ---	6023 531	
	BUMPER, Body Center Pillar to Rear Door Upper Frame					
	4 D., Sta. Wgn.	2	---- ---	---- ---	2484 493	
	BUMPER, Tailgate Opening Sill Reinforcement Floor Pan Cover					
	Sta. Wgn.	2	---- ---	2255 231		
	BUMPER, Center and Rear Floor Pan Cover Panel 2nd. Seat Back Support Panel					
	Sta. Wgn.	4	---- ---	---- ---	2094 618	
	BUMPER, Rr. Floor Pan Cover Pnl. Release Handle					
	Sta. Wgn.	2	---- ---	---- ---	*2765 393	
23-32-53	REINFORCEMENT, Rear Floor Pan Extension					
	Sta. Wgn.	1	---- ---	2252 332-3		
23-32-56	PANEL, Rear Floor Pan Cover					
	Sta. Wgn., 2 Seater w/Tee NUTS	1	---- ---	2254 788		
	Sta. Wgn.	1	---- ---	---- ---	2493 878	
23-32-58	STRIKER, Rear Floor Pan Cover Panel					
	Sta. Wgn. 2 Seater	1	---- ---	2254 667		
	STRIKER, Rear Floor Pan Cover Panel Release Handle					
	Sta. Wgn. On Sill	1	---- ---	---- ---	2486 846	
23-32-65	HINGE, Center Floor Pan Front Cover Panel					
	Sta. Wgn.	1	2243 320			
	HINGE, Rear Floor Pan Cover Panel					
	Sta. Wgn. 2 Seater	1	---- ---	2254 675		
	Sta. Wgn.	1	---- ---	---- ---	2481 811	
23-32-69	T/PLATE, Center Floor Pan Cover Panel Hinge					
	Sta. Wgn.	1	---- ---	2423 540		
	T/PLATE, Rear Floor Pan to Center Floor Pan Cover Panel					
	Sta. Wgn.	1	---- ---	---- ---	2484 974	
23-32-70	SUPPORT and Weld NUTS, Center Floor Pan Rear Cover Panel					
	Sta. Wgn.	1	2243 526			
	V Barracuda Center	1	2529 997			
	SUPPORT, Center Floor Pan Cover Panel					
	V Barracuda	1	2528 416-7			
	REINFORCEMENT, Rear Floor Pan Rear Center					
	2 D., 2 D. H. T., Cv. Cp., 4 D.	1	---- ---	2166 935		
	REINFORCEMENT, Rear Floor Pan Cover Panel Side to Floor Pan					
	Sta. Wgn. Prime	1	---- ---	2254 664-5		
	REINFORCEMENT, Floor Pan to Stone Deflector					
	All	2	---- ---	---- ---	---- ---	2481 344
23-32-73	PIN, Rear Floor Pan Cover Panel Prop Rod					
	Sta. Wgn. 2 Seater	1	---- ---	6000 130		
23-32-79	BRACKET and RETAINER, Rear Floor Pan Cover Panel Prop Rod					
	Sta. Wgn. 2 Seater	1	---- ---	2254 810	2254 810	

TYPE LETTERS Indicate: V - Valiant, L - Dart, R - Belvedere, W - Coronet, P - Plymouth, D - Dodge, C - Chrysler, Y - Imperial

★Indicates use as required.
Printed in U.S.A.
Bindicates parts not listed in any previous parts book.
Prices and specifications subject to change without notice.
March 1966 Supersedes May 1965.
Right and left part numbers are on same line, first number is right, second number is left.
• Indicates change or addition.

MyMopar.com

CODE	PART NAME AND DESCRIPTION	PER CAR	VALIANT / DART	PLYMOUTH BELVEDERE / DODGE CORONET	PLYMOUTH FURY / DODGE POLARA / CHRYSLER	IMPERIAL
23-32-0	**PANS, PLUGS AND BODY BUMPERS - Cont'd**					
23-32-79	BRACKET, Rear Floor Pan Cover Panel Release Handle					
	Sta. Wgn., w/Locked Luggage Compartment	1	---- ---	2251 433		
	BRACKET, Rear Floor Pan Cover Prop Rod Pivot					
	Sta. Wgn. 2 Seater	1	---- ---	1432 929	1432 929	
	BRACKET, Rear Floor Pan Cover Panel Support Torsion Bar					
	Sta. Wgn.	2	---- ---	---- ---	2520 889	
	BRACKET, Rear Floor Pan Cover Panel Torsion Bar					
	Sta. Wgn.	1	---- ---	---- ---	2520 890	
23-32-80	HANDLE, Rear Floor Pan Cover Panel Release					
	Sta. Wgn., w/Locked Luggage Compartment	1	---- ---	*2251 680	*2486 844	
23-32-82	BEZEL, Rear Floor Pan Cover Panel Grip					
	Sta. Wgn.	1	---- ---	2252 183		
23-32-87	SPRING, Center Floor Pan Cover Panel Hinge					
	Sta. Wgn.	3	2423 448	2423 449		
	SPRING, Rear Floor Pan Cover Panel Release					
	Sta. Wgn., w/Locked Luggage Compartment	1	---- ---	2251 676		
23-32-88	ROD, Rear Floor Pan Cover Prop					
	Sta. Wgn.	1	---- ---	1960 061		
23-32-89	BAR, Rear Floor Pan Cover Panel Torsion					
	Sta. Wgn.	1	---- ---	---- ---	2520 891	
23-32-92	GUSSET, Center Floor Pan Rear Suspension Front Hinge Bracket Support to Sill					
	All	1	---- ---	2251 686-7		
	GUSSET, Center Floor Pan Rear Suspension Front Hanger Bracket to Rail					
	All	1	---- ---	2251 688-9		
23-32-93	SUPPORT and T/PLATE, Rear Floor Pan Rear Suspension Front Hanger Bracket					
	All	1	2081 004-5			
	SUPPORT and T/PLATE, Rear Floor Pan Rear Suspension Rear Bracket					
	Sta. Wgn.	1	---- ---	---- ---	2493 846-7	
	Except Sta. Wgn.	1	---- ---	---- ---	2493 296-7	
	SUPPORT, Center Floor Pan Rear Suspension Front Hanger Bracket					
	All	1	---- ---	2480 910-1		
	Sta. Wgn. w/NUT	1	---- ---	---- ---	2528 396-7	
	BRACKET and SUPPORT, Rear Floor Pan Rear Suspension Rear Hanger					
	Sta. Wgn.	1	---- ---	2253 108-9		
	R, except Sta. Wgn.	1	---- ---	2253 106-7		
23-32-98	PLUG, Dash Panel Extension					
	All	1	---- ---	2254 626		
	PLUG, Dash Panel Clutch Rod Opening					
	All	1	---- ---	2254 110		
	PLUG, Cowl Top Panel					
	All	2	2254 626			
	PLUG, Dash Panel Heater Hose Hole					
	All	2	2094 985	2094 985	1882 735	

TYPE LETTERS Indicate: V - Valiant, L - Dart, R - Belvedere, W - Coronet, P - Plymouth, D - Dodge, C - Chrysler, Y - Imperial

★Indicates use as required.
⊟Indicates parts not listed in any previous parts book.
Right and left part numbers are on same line, first number is right, second number is left.
* Indicates change or addition.

Printed in U.S.A.
Prices and specifications subject to change without notice.
March 1966 Supersedes May 1965.

MyMopar.com

CODE	PART NAME AND DESCRIPTION	PER CAR	VALIANT / DART	PLYMOUTH BELVEDERE / DODGE CORONET	PLYMOUTH FURY / DODGE POLARA / CHRYSLER	IMPERIAL
23-32-0	**PANS, PLUGS AND BODY BUMPERS - Cont'd**					
23-32-99	SNAP RING, Rear Floor Pan Cover Panel Release Handle Clevis Pin					
	Sta. Wgn. 2 Seater	1	---- ---	1322 503		
23-32-105	RAIL and Front Hanger GUSSET, Rear Floor Pan Side					
	All	1	2253 644-5			
	RAIL, SUPPORT and Sill GUSSET, Rear Floor Pan Side Rear Hanger Bracket					
	Sta. Wgn.	1	---- ---	2493 616-7		
	R, except Sta. Wgn.	1	---- ---	2493 612-3		
	W, except Sta. Wgn.	1	---- ---	2493 614-5		
	RAIL, Front Floor Pan Side					
	All Complete	1	2425 414-5	2493 058-9		
	RAIL and Sill REINFORCEMENT, Rear Floor Pan Side					
	Sta. Wgn.	1	---- ---	---- ---	2493 280-1	
	P, except Sta. Wgn.	1	---- ---	---- ---	2493 256-7	
	D, C, except Sta. Wgn.	1	---- ---	---- ---	2493 832-3	
23-32-106	RETAINER, Rear Floor Pan Spare Tire Cover Panel					
	All Prime	1	2259 173			
23-32-107	BRACKET and HINGE, Rear Floor Pan Cover Panel					
	Sta. Wgn.	2	2484 147			
	SUPPORT and NUT, Rear Floor Pan Cover Panel					
	Sta. Wgn.	1	---- ---	---- ---	*2664 126-7	
	SUPPORT and T/PLATE, Rr. Floor Pan Cover Pnl.					
	Sta. Wgn. Lt.	1	---- ---	---- ---	⊟2769 021	
23-32-108	BRACKET, Front Side Rail Front Suspension Upper Control Arm Mounting					
	All	1	2081 840-1			
	All Rt.	1	---- ---	*2467 982		
	Lt.	1	---- ---	*2204 185		
23-32-110	SHIELD, Front Suspension Crossmember to Front Side Rail Splash					
	All Left	1	2260 469			
	All	1	---- ---	2260 472-3		
	SHIELD, Front Side Rail Lower Splash					
	All Left	1	---- ---	2405 041		
23-32-112	REINFORCEMENT, Front Floor Pan to Inner Sill Front Reinforcement to Front Side Rail					
	Cv. Cp.	1	2422 564-5	2254 620-1		
	REINFORCEMENT, Center Floor Pan to Inner Sill and Rear Rail and Spring Hanger Support					
	Cv. Cp.	1	2422 568-9	2254 618-9		
	REINFORCEMENT, Center Floor Pan Rear Suspension Front Hanger Bracket Support					
	All	1	---- ---	2481 204-5		
	REINFORCEMENT, Center Floor Pan Spring Hanger Bracket					
	Cv. Cp., D, C	1	---- ---	---- ---	2481 834-5	
	Cv. Cp., P	1	---- ---	---- ---	2527 818-9	

TYPE LETTERS Indicate: V - Valiant, L - Dart, R - Belvedere, W - Coronet, P - Plymouth, D - Dodge, C - Chrysler, Y - Imperial

★Indicates use as required.
⊟Indicates parts not listed in any previous parts book.
March 1966 Supersedes May 1965.

Printed in U.S.A.
Prices and specifications subject to change without notice.
Right and left part numbers are on same line, first number is right, second number is left.
* Indicates change or addition.

MyMopar.com

CODE	PART NAME AND DESCRIPTION	PER CAR	VALIANT / DART	PLYMOUTH BELVEDERE / DODGE CORONET	PLYMOUTH FURY / DODGE POLARA / CHRYSLER	IMPERIAL
23-32-0	**PANS, PLUGS AND BODY BUMPERS - Cont'd**					
23-32-112	REINFORCEMENT, Rear Suspension Front Bracket Support					
	All To Rail	1	---- ---	---- ---	2481 406-7	
	To Sill	1	---- ---	---- ---	2481 404-5	
23-32-113	CLIP, Front Side Rail Splash Shield					
	All	★	2405 049	2405 049		
23-32-114	BRACKET, Front Floor Pan to Inner Sill and Front Reinforcement to Front Side Rail					
	Cv. Cp.	1	---- ---	2254 620-1		
23-32-115	REINFORCEMENT, Front Side Rail					
	All	1	2467 652-3	2204 170-1		
	REINFORCEMENT, Front Side Side Rail to Side Inner					
	All	1	2242 460-1			
	REINFORCEMENT, Rear Floor Pan Side Rail and Sill					
	P, except Sta. Wgn.	1	---- ---	---- ---	2493 256-7	
	REINFORCEMENT and Radiator Yoke BRACKET, Front Floor Pan Side Rail					
	All	1	---- ---	2493 044-5		
	REINFORCEMENT, Rr. Side Rail to Rr. Crossmember					
	P, except Sta. Wgn. Rt.	1	---- ---	---- ---	*2481 408	
	Lt.	1	---- ---	---- ---	*2483 843	
	P, Sta. Wgn.	1	---- ---	---- ---	*2481 408-9	
	All, D, C	1	---- ---	---- ---	*2481 408-9	
23-33-0	**INSTRUMENT PANEL**					
23-33-10	BRACE, Instrument Panel Lower Reinforcement to Pedal Bracket					
	All	1	---- ---	2217 704		
	BRACE and NUT, Instrument Panel Lower Reinforcement to Windshield Wiper Motor Mounting					
	All	1	---- ---	2571 260		
	BRACE, Instrument Panel Lower Reinforcement to Center Gusset					
	All	1	---- ---	---- ---	---- ---	2492 327
	BRACE, Instrument Panel Steering Column Support Bracket to Cowl					
	All Left	1	---- ---	---- ---	---- ---	2492 321
	BRACE, Instrument Panel Lower Reinforcement to Windshield Wiper Motor Mounting Bracket					
	All	1	---- ---	---- ---	---- ---	2292 327
	BRACE, Instrument Panel to Dash					
	C	1	---- ---	---- ---	2580 894	
	BRACE, Instrument Panel Lower Reinforcement to Dash					
	P, D w/o Air Conditioning	1	---- ---	---- ---	2587 067	

TYPE LETTERS Indicate: V - Valiant, L - Dart, R - Belvedere, W - Coronet, P - Plymouth, D - Dodge, C - Chrysler, Y - Imperial

★Indicates use as required.

⊟Indicates parts not listed in any previous parts book.

Right and left part numbers are on same line, first number is right, second number is left.

* Indicates change or addition.

Printed in U.S.A.

Prices and specifications subject to change without notice.

March 1966 Supersedes May 1965.

MyMopar.com

CODE	PART NAME AND DESCRIPTION	PER CAR	VALIANT / DART	PLYMOUTH BELVEDERE / DODGE CORONET	PLYMOUTH FURY / DODGE POLARA / CHRYSLER	IMPERIAL
23-33-0	**INSTRUMENT PANEL - Cont'd**					
23-33-12	COVER, Instrument Panel Radio Opening					
	All	1	2161 973			
	R-L, W-L	1	---- ---	2217 747		
	R-H, R-P	1	---- ---	2492 988		
	W-H, W-P	1	---- ---	2492 984		
	D	1	---- ---	---- ---	2571 733	
23-33-20	COVER, Instrument Panel Clock Hole					
	R, P-L, P-M	1	---- ---	2496 724	2496 466	
	W, D-L, D-H	1	---- ---	---- ---	2497 400	
	C1, C2	1	---- ---	---- ---	2492 764	
23-33-42	GRILLE, Instrument Panel Radio Speaker					
	P Prime	1	---- ---	---- ---	2571 744	
	D Prime	1	---- ---	---- ---	2570 526	
	C Prime	1	---- ---	---- ---	2491 620	
	All w/Air Conditioning, Prime.	1	---- ---	---- ---	---- ---	2571 102
	w/o Air Conditioning, Prime	1	---- ---	---- ---	---- ---	2571 099
23-33-53	BRACKET, Instrument Panel Housing Attaching					
	D	1	---- ---	---- ---	2571 809	
23-33-65	COVER, Instrument Panel Heater Hole Opening					
	C Prime	1	*2571 637	---- ---	⊟2661 554	
	COVER, Instrument Panel Defroster Opening					
	All	1	---- ---	2492 517		
23-33-86	MOULDING, Instrument Panel					
	R-L, Horizontal w/o Trim Pad, w/o Radio.	1	---- ---	2587 982		
	R-L, Horizontal w/Trim Pad	1	---- ---	2571 908		
	R-H, R-P, Horizontal, w/o Trim Pad	1	---- ---	2587 981		
	R-H, R-P, Horizontal w/Trim Pad	1	---- ---	2571 909		
	W, Horizontal w/Trim Pad	1	---- ---	2571 910		
	W, Horizontal w/o Trim Pad, w/o Radio.	1	---- ---	2631 061		
	R-L, W-L, Horizontal w/o Trim Pad, w/Radio. .	1	---- ---	2587 981		
	D, Headlamp and Auto. Pilot Left	1	---- ---	---- ---	2571 916	
	D, Center w/Heater and Air Conditioning, w/Radio . .	1	---- ---	---- ---	2571 061	
	D, Center w/Heater and Air Conditioning, w/o Radio . . .	1	---- ---	---- ---	2661 676	
	D, Center w/o Heater and Air Conditioning	1	---- ---	---- ---	2571 059	
	D, Center w/Heater, w/Radio	1	---- ---	---- ---	2571 060	
	D, Center w/Heater, w/o Radio . .	1	---- ---	---- ---	*2661 780	
	D, Instrument Cluster, Center	1	---- ---	---- ---	2571 065	
	D, End w/o Air Conditioning, Right	1	---- ---	---- ---	2571 068	
	Left	1	---- ---	---- ---	2571 064	
	P, D, w/Trim Pad Lower	1	---- ---	---- ---	2587 096-7	
	C, Instruments Upper	1	---- ---	---- ---	2492 691	
	Lower	1	---- ---	---- ---	2570 145	
	C (paint black where req'd.) Right	1	---- ---	---- ---	*2571 854	
	Left	1	---- ---	---- ---	2491 624	
	C, Glove Box Door Opening Upper	1	---- ---	---- ---	2571 693	

TYPE LETTERS Indicate: V - Valiant, L - Dart, R - Belvedere, W - Coronet, P - Plymouth, D - Dodge, C - Chrysler, Y - Imperial

★Indicates use as required.
⊟Indicates parts not listed in any previous parts book.
March 1966 Supersedes May 1965.

Printed in U.S.A.
Prices and specifications subject to change without notice.
Right and left part numbers are on same line, first number is right, second number is left.
* Indicates change or addition.

MyMopar.com

CODE	PART NAME AND DESCRIPTION		PER CAR	VALIANT / DART	PLYMOUTH BELVEDERE / DODGE CORONET	PLYMOUTH FURY / DODGE POLARA / CHRYSLER	IMPERIAL
23-33-0	**INSTRUMENT PANEL - Cont'd**						
23-33-86	MOULDING and Finish PLATE, Instrument Panel Center						
	C-L	w/o Heater	1	---- ---	---- ---	2571 985	
	C-L	w/Heater, w/o Radio	1	---- ---	---- ---	2571 994	
	C-L	w/Search Tuner Radio, w/o Heater	1	---- ---	---- ---	2571 982	
	C-L	w/AM/FM Radio, w/o Heater	1	---- ---	---- ---	2571 979	
	C-L	w/AM/FM Radio, w/Heater	1	---- ---	---- ---	2571 988	
	C-M, C-P	w/o Heater	1	---- ---	---- ---	2571 983	
	C-M, C-P	w/Search Tuner Radio, w/o Heater	1	---- ---	---- ---	2571 980	
	C-M, C-P	w/Heater, w/o Radio	1	---- ---	---- ---	2571 992	
	C-M, C-P	w/AM/FM Radio, w/o Heater	1	---- ---	---- ---	2571 977	
	C-M, C-P	w/AM/FM Radio, w/Heater	1	---- ---	---- ---	2571 986	
	C-H	w/o Heater	1	---- ---	---- ---	2571 984	
	C-H	w/Heater, w/o Radio	1	---- ---	---- ---	2571 993	
	C-H	w/AM/FM Radio, w/o Heater	1	---- ---	---- ---	2571 978	
	C-H	w/Search Tuner Radio, w/o Heater	1	---- ---	---- ---	2571 981	
	C-H	w/AM/FM Radio, w/Heater	1	---- ---	---- ---	2571 987	
23-33-89	CAP, Instrument Panel End						
	Cv. Cp., V-P, L-P	Gold	1	4242-3 AY6			
	Cv. Cp., L-H, L-P	Red	1	4242-3 AR7			
	V, except Barracuda,	Red	1	4242-3 TR6			
	V, L, except Barracuda	Blue	1	4242-3 VB6			
		Turquoise	1	4242-3 VQ6			
		Yellow Tan	1	4242-3 VT6			
		Black	1	4242-3 VX9			
		Red	1	4242-3 AR7			
		Yellow Gold	1	4242-3 AY6			
	All	Red	1	4242-3 AR7			
		Yellow Gold	1	4242-3 AY6			
		Blue	1	4242-3 VB6			
		Turquoise	1	4242-3 VQ6			
		Yellow Tan	1	4242-3 VT6			
		Black	1	4242-3 VX9			
23-33-96	NAME PLATE, Instrument Panel						
	L-H except Cv. Cp.	"Dart 270"	1	2571 203			
	Cv. Cp.	Switch Plate, Right	1	---- ---	---- ---	---- ---	2571 623
	Except Cv. Cp.	Switch Plate, Right	1	---- ---	---- ---	---- ---	2571 622
	All	Switch Plate, Left	1	---- ---	---- ---	---- ---	2571 621
23-33-109	PANEL, Instrument						
	V		1	2571 517			
	L		1	2571 518			
	C	w/ or w/o A/ Cond.	1	---- ---	---- ---	2492 634	
	R	w/ or w/o A/Cond.	1	---- ---	*2571 853		
	W	w/A/Cond.	1	---- ---	⊟2571 890		
	All		1	---- ---	---- ---	---- ---	2576 150
	W	w/o A/Cond.	1	---- ---	*2571 853		
	P	w/A/Cond.	1	---- ---	---- ---	2571 934	
	P	w/o A/Cond.	1	---- ---	---- ---	2571 931	

TYPE LETTERS indicate: V - Valiant, L - Dart, R - Belvedere, W - Coronet, P - Plymouth, D - Dodge, C - Chrysler, Y - Imperial

★Indicates use as required.
⊟Indicates parts not listed in any previous parts book.
Right and left part numbers are on same line, first number is right, second number is left.
* Indicates change or addition.

Printed in U.S.A.
Prices and specifications subject to change without notice.
March 1966 Supersedes May 1965.

MyMopar.com

CODE	PART NAME AND DESCRIPTION		PER CAR	VALIANT / DART	PLYMOUTH BELVEDERE / DODGE CORONET	PLYMOUTH FURY / DODGE POLARA / CHRYSLER	IMPERIAL
23-33-O	**INSTRUMENT PANEL - Cont'd**						
23-33-109	PANEL - Cont'd.						
	D	w/Air Conditioning . . .	1	---- ---	---- ---	2571 920	
	D	w/o Air Conditioning . .	1	---- ---	---- ---	*2631 147	
	D	w/Air Conditioning and Trim Pad	1	---- ---	---- ---	2631 145	
	EXTENSION, Instrument Panel End						
	All, Prime	Right	1	---- ---	---- ---	---- ---	2492 818
		Left	1	---- ---	---- ---	---- ---	2571 274
	All	Yellow Green	1	---- ---	---- ---	---- ---	4200-1VF9
23-33-132	COVER, Instrument Panel Steering Column Opening						
	D	Lower, Prime	1	---- ---	---- ---	2571 515	
	C	Prime	1	---- ---	---- ---	*2661 847	
	P	Blue	1	---- ---	---- ---	4257 AB5	
		Turquoise	1	---- ---	---- ---	4257 AQ7	
		Red	1	---- ---	4231 AR7	4257 AR7	
		Black	1	---- ---	---- ---	4257 AX9	
		Yellow Tan	1	---- ---	---- ---	4257 AT5	
		Yellow Gold	1	---- ---	4231 AY4	4257 AY4	
	All	Blue	1	---- ---	4231 VB5		
		Turquoise	1	---- ---	4231 VQ7		
		Red	1	---- ---	4231 VR6		
		Yellow Tan	1	---- ---	4231 VT5		
		Black	1	---- ---	4231 VX9		
	FILLER, Instrument Panel Steering Column Upper and Lower						
	C		1	---- ---	---- ---	2587 122	
23-33-135	FINISH PLATE, Instrument Panel						
	L-H, L-P	Right	1	2571 202			
	V-H, V-P, Center	w/Heater	1	2571 291			
	V-H, V-P, Center	w/o Heater and Air Conditioning	1	2571 290			
	V, Center	w/Air Conditioning . . .	1	2571 452			
	V-H, V-P	w/200-V, Right	1	2571 453			
	V-H, V-P	w/o 200-V, Right . . .	1	2492 994			
	V-H, V-P	Left	1	2492 995			
	C-L, Center, w/Search Tuner Radio	Grained	1	---- ---	---- ---	2571 794	
	C-L, Center, w/AM/FM Radio	Grained	1	---- ---	---- ---	2571 793	
	C-L, Center, w/FM Radio, w/o Heater	Grained	1	---- ---	---- ---	2587 266	
	C-L, Center, w/Search Tuner Radio, w/o Heater	Grained	1	---- ---	---- ---	2587 267	
	C-M, Center, w/FM Radio, w/o Heater	Engine Turned	1	---- ---	---- ---	2587 269	
	C-M, Center, w/AM/FM Radio	Engine Turned	1	---- ---	---- ---	2571 784	
	C-M, Center, w/Search Tuner Radio	Engine Turned	1	---- ---	---- ---	2571 786	
	C-M, Center, w/Search Tuner Radio, w/o Heater	Engine Turned	1	---- ---	---- ---	2587 270	
	C-H, Center, w/FM Radio, w/o Heater	Veneer	1	---- ---	---- ---	2587 272	
	C-H, Center, w/Search Tuner Radio	Veneer	1	---- ---	---- ---	2571 787	

TYPE LETTERS Indicate: V - Valiant, L - Dart, R - Belvedere, W - Coronet, P - Plymouth, D - Dodge, C - Chrysler, Y - Imperial

★Indicates use as required.
⊟Indicates parts not listed in any previous parts book.
March 1966 Supersedes May 1965.

Printed in U.S.A.
Prices and specifications subject to change without notice.
Right and left part numbers are on same line, first number is right, second number is left.
* Indicates change or addition.

MyMopar.com

CODE	PART NAME AND DESCRIPTION	PER CAR	VALIANT / DART	PLYMOUTH BELVEDERE / DODGE CORONET	PLYMOUTH FURY / DODGE POLARA / CHRYSLER	IMPERIAL
23-33-0	**INSTRUMENT PANEL - Cont'd**					
23-33-135	FINISH PLATE - Cont'd					
	C-H, Center, w/AM/FM Radio Veneer	1	---- ---	---- ---	2571 785	
	C-H, Center, w/Search Tuner Radio, w/o Heater Veneer	1	---- ---	---- ---	2587 273	
	C-M, Engine Turned Right	1	---- ---	---- ---	2571 159	
	C-M, Engine Turned Left	1	---- ---	---- ---	2571 154	
	C-H, Veneer Right	1	---- ---	---- ---	2571 165	
	C-H, Veneer Left	1	---- ---	---- ---	2571 160	
	All End	1	---- ---	---- ---	---- ---	2570 130-1
	2 D. H. T., 4 D. H. T., Ignition and Auto. Pilot Right	1	---- ---	---- ---	---- ---	2491 600
	2 D. H. T., 4 D. H. T., Ignition and Rear Window Defroster Right	1	---- ---	---- ---	---- ---	2491 601
	Cv. Cp., Acc. Switch Right	1	---- ---	---- ---	---- ---	2491 601
	All, Ignition, Auto. Pilot and Acc. Switch Right	1	---- ---	---- ---	---- ---	2491 602
	2 D. H. T., 4 D. H. T., Switch Right	1	---- ---	---- ---	---- ---	2217 820
	All, Switch Left	1	---- ---	---- ---	---- ---	2217 821
	All, Center, w/AM Radio	1	---- ---	---- ---	---- ---	2570 133
	All, Center, w/AM/FM Radio	1	---- ---	---- ---	---- ---	2570 134
	All, Center, w/o Radio	1	---- ---	---- ---	---- ---	2570 132
	BEZEL, Heater Radio and Clock P w/Radio	1	---- ---	---- ---	2497 426	
	P, Heater and Air Conditioning, Radio and Clock w/or w/o Radio	1	---- ---	---- ---	2497 427	
	P, Heater and Clock w/o Radio	1	---- ---	---- ---	2497 428	
23-33-147	COVER, Instrument Panel End Extension All	1	---- ---	---- ---	---- ---	2218 888-9
23-33-216	COVER, Instrument Panel Map Light Opening D Prime	1	---- ---	---- ---	2571 734	
	C Prime	1	---- ---	---- ---	2217 282	
23-33-231	BEZEL, Parking Brake Lever Release Rod W	1	---- ---	2467 524		
	R	1	---- ---	2071 159		
	BEZEL, Parking Brake Lever Release Rod Mounting W	1	---- ---	2497 250		
23-33-236	NUT, Parking Brake Lever Release Rod Bezel W, D	1	---- ---	2071 146	6008 060	
23-34-0	**BODY PANELS**					
23-34-3	EXTENSION, Wheelhouse Belt Bar to Body Lock Pillar Sta. Wgn.	1	---- ---	---- ---	2526 756-7	
23-34-4	CLIP, Tailgate Opening Sill Panel Seal Sta. Wgn.	8	---- ---	---- ---	2405 049	
23-34-5	PANEL, Wheelhouse Spare Tire Housing Sta. Wgn. Inner	1	---- ---	---- ---	2484 298	
	Front	1	---- ---	---- ---	2484 296	
	Lower	1	---- ---	---- ---	2484 297	

TYPE LETTERS Indicate: V - Valiant, L - Dart, R - Belvedere, W - Coronet, P - Plymouth, D - Dodge, C - Chrysler, Y - Imperial

★Indicates use as required.
⊟Indicates parts not listed in any previous parts book.
Right and left part numbers are on same line, first number is right, second number is left.
* Indicates change or addition.

Printed in U.S.A.
Prices and specifications subject to change without notice.
March 1966 Supersedes May 1965.

MyMopar.com

CODE	PART NAME AND DESCRIPTION	PER CAR	VALIANT / DART	PLYMOUTH BELVEDERE / DODGE CORONET	PLYMOUTH FURY / DODGE POLARA / CHRYSLER	IMPERIAL
23-34-0	**BODY PANELS - Cont'd**					
23-34-7	EXTENSION, Wheelhouse Spare Tire Inner Housing to Tailgate Sill					
	Sta. Wgn.	1	---- ---	---- ---	2484 299	
	EXTENSION, Wheelhouse Inner to Tailgate Opening Sill					
	Sta. Wgn. Left	1	---- ---	---- ---	2528 063	
23-34-9	PLUG, Tailgate Opening Sill Panel					
	Sta. Wgn.	2	2094 618			
23-34-10	COVER, Tailgate Sill Panel Latch Opening					
	Sta. Wgn. Prime	1	---- ---	2254 801		
23-34-11	HINGE, Tailgate Opening Sill to Tailgate Cover					
	Sta. Wgn.	1	---- ---	---- ---	2484 946	
23-34-13	BRACKET and NUT, Wheelhouse to Fuel Tank Stone Deflector					
	Sta. Wgn. Upper	1	---- ---	---- ---	2526 829	
23-34-16	PANEL and NUT, Tailgate Opening Sill					
	Sta. Wgn.	1	---- ---	2251 477	2526 651	
	PANEL and EXTENSION, Tailgate Opening Sill					
	Sta. Wgn.	1	2493 351			
	EXTENSION, Tailgate Opening Sill Panel					
	Sta. Wgn.	1	---- ---	---- ---	2484 300-1	
23-34-17	REINFORCEMENT, Tailgate Opening Sill Panel					
	Sta. Wgn.	1	---- ---	---- ---	2481 674	
	Sta. Wgn. w/FILLER	1	---- ---	2253 175		
	SUPPORT, Tailgate Opening Sill Panel					
	Sta. Wgn.	1	---- ---	---- ---	2484 972-3	
23-34-21	PANEL, Wheelhouse Cap					
	Cv. Cp., P	1	2423 266-7	2422 040-1	2482 058-9	
	Cv. Cp., D	1	---- ---	---- ---	2482 060-1	
	Cv. Cp., C	1	---- ---	---- ---	2482 062-3	2424 692-3
23-34-22	SUPPORT, Quarter Outside Inner Panel to Wheelhouse					
	Cv. Cp., V	1	2484 310-1			
	2 D., 2 D. H. T., 4 D., L	1	2243 582-3			
	SUPPORT, Quarter Outside Panel to Wheelhouse Outer Panel					
	Sta. Wgn.	1	2242 792-3			
	SUPPORT, Quarter Outside Panel to Wheelhouse					
	2 D., 4 D.	1	---- ---	2255 790-1		
	2 D. H. T.	1	---- ---	2424 920-1		
	SUPPORT and NUT, Wheelhouse Panel to Quarter Outside Panel Strainer					
	Cv. Cp.	1	---- ---	2424 466-7		
	SUPPORT, Wheelhouse to Rear Window Side Frame					
	4 D., 4 D. H. T., D	1	---- ---	---- ---	2482 366-7	
	2 D. H. T., D	1	---- ---	---- ---	2482 122-3	
	4 D., C	1	---- ---	---- ---	2482 368-9	
	SUPPORT, Wheelhouse to Shelf Panel Extension					
	2 D. H. T., P	1	---- ---	2424 926-7	2484 620-1	
	2 D. H. T., C1, C2	1	---- ---	---- ---	2481 550-1	
	2 D. H. T., C3	1	---- ---	---- ---	2526 632-3	
	4 D., C	1	---- ---	---- ---	2482 126-7	
	4 D. H. T., C	1	---- ---	---- ---	2526 632-3	

TYPE LETTERS indicate: V - Valiant, L - Dart, R - Belvedere, W - Coronet, P - Plymouth, D - Dodge, C - Chrysler, Y - Imperial

★Indicates use as required.
⊟Indicates parts not listed in any previous parts book.
March 1966 Supersedes May 1965.

Printed in U.S.A.
Prices and specifications subject to change without notice.
Right and left part numbers are on same line, first number is right, second number is left.
* Indicates change or addition.

MyMopar.com

CODE	PART NAME AND DESCRIPTION	PER CAR	VALIANT / DART	PLYMOUTH BELVEDERE / DODGE CORONET	PLYMOUTH FURY / DODGE POLARA / CHRYSLER	IMPERIAL
23-34-0	**BODY PANELS - Cont'd**					
23-34-24	FILLER, Wheelhouse to Rear Pillar Panel Sta. Wgn.	1	---- ---	2251 830-1		
23-34-26	PANEL, Wheelhouse to Rear Pillar Sta. Wgn.	1	---- ---	2251 586-7		
23-34-27	PANEL, Wheelhouse					
	Cv. Cp. Inner	1	2255 968-9			
	Cv. Cp., V Outer	1	2255 958-9			
	Cv. Cp., L Outer	1	2255 960-1			
	Sta. Wgn. Inner	1	2243 494-5			
	Sta. Wgn. Outer	1	2481 198-9			
	V Barracuda Inner	1	2243 494-5			
	V Barracuda Outer	1	2481 194-5			
	2 D., 2 D. H. T., 4 D., Inner, Right	1	2244 942			
	2 D., 2 D. H. T., 4 D., Inner, Left	1	2081 163			
	2 D., 2 D. H. T., 4 D., V Outer	1	2481 194-5			
	2 D., 2 D. H. T., 4 D., L Outer	1	2243 564-5			
	Cv. Cp. Inner	1	---- ---	2166 258-9		
	Cv. Cp., R Outer	1	---- ---	2422 034-5		
	Cv. Cp., W Outer	1	---- ---	2483 238-9		
	Sta. Wgn. Inner	1	---- ---	2165 832-3		
	Sta. Wgn. Outer	1	---- ---	2422 038-9		
	2 D., 2 D. H. T., 4 D., Inner	1	---- ---	2165 828-9		
	2 D., 2 D. H. T., 4 D., R Outer	1	---- ---	2422 032-3		
	2 D., 2 D. H. T., 4 D., W Outer	1	---- ---	2483 236-7		
	Cv. Cp., P Inner	1	---- ---	---- ---	2528 898-9	
	Cv. Cp., P Outer	1	---- ---	---- ---	2528 896-7	
	2 D., 2 D. H. T., 4 D., 4 D. H. T., P Inner	1	---- ---	---- ---	⊟2782 546-7	
	2 D., 2 D. H. T., 4 D., 4 D. H. T., P Outer	1	---- ---	---- ---	2481 530-1	
	Cv. Cp., D Inner	1	---- ---	---- ---	2482 056-7	
	Cv. Cp., D Outer	1	---- ---	---- ---	2482 050-1	
	2 D. H. T., 4 D., 4 D. H. T., D Inner	1	---- ---	---- ---	*2782 848-9	
	2 D. H. T., 4 D., 4 D. H. T., D Outer	1	---- ---	---- ---	2482 048-9	
	Sta. Wgn. Inner, Right	1	---- ---	---- ---	2482 598	
	Sta. Wgn. Inner, Left	1	---- ---	---- ---	2482 601	
	Sta. Wgn., P, D Outer, Right	1	---- ---	---- ---	2481 656	
	Sta. Wgn., P, D Outer, Left	1	---- ---	---- ---	2481 657	
	2 D. H. T., 4 D., 4 D. H. T., C Inner	1	---- ---	---- ---	*2782 848-9	
	2 D. H. T., 4 D., 4 D. H. T., C Outer	1	---- ---	---- ---	2481 532-3	
	Sta. Wgn., C w/NUT, Outer, Right	1	---- ---	---- ---	2481 660	
	Sta. Wgn., C Outer, Left	1	---- ---	---- ---	2481 661	
	Cv. Cp., C Inner	1	---- ---	---- ---	2482 056-7	2424 690-1
	Cv. Cp., C Outer	1	---- ---	---- ---	2482 052-3	2424 688-9
	2 D. H. T., 4 D. H. T., Inner	1	---- ---	---- ---	---- ---	1651 300
	2 D. H. T., 4 D. H. T., Outer	1	---- ---	---- ---	---- ---	2255 458-9

TYPE LETTERS Indicate: V - Valiant, L - Dart, R - Belvedere, W - Coronet, P - Plymouth, D - Dodge, C - Chrysler, Y - Imperial

★Indicates use as required.
⊟Indicates parts not listed in any previous parts book.
Right and left part numbers are on same line, first number is right, second number is left.
* Indicates change or addition.

Printed in U.S.A.
Prices and specifications subject to change without notice.

MyMopar.com

March 1966 Supersedes May 1965.

CODE	PART NAME AND DESCRIPTION	PER CAR	VALIANT / DART	PLYMOUTH BELVEDERE / DODGE CORONET	PLYMOUTH FURY / DODGE POLARA / CHRYSLER	IMPERIAL
23-34-0	**BODY PANELS - Cont'd**					
23-34-29	EXTENSION, Wheelhouse Outer Panel					
	Sta. Wgn.	1	2242 928-9			
	V, except Sta. Wgn.	1	2422 612-3			
	2 D., 2 D. H. T., Cv. Cp., 4 D., L	1	2243 802-3			
	Sta. Wgn., C Rear Lower	1	---- ---	---- ---	2526 846-7	
23-34-32	BAFFLE, Quarter Inside Upper Panel to Roof Panel Side Extension					
	Sta. Wgn.	2	2243 832			
23-34-36	REINFORCEMENT, Wheelhouse to Lower Belt Bar					
	Cv. Cp., V	1	2423 642-3	2422 840-1		
	Cv. Cp., L	2	2423 644			
	REINFORCEMENT, Wheelhouse to Belt Side Lower Bar					
	Cv. Cp., P	1	---- ---	---- ---	2482 146-7	
	Cv. Cp., D, C	1	---- ---	---- ---	2482 148-9	
	REINFORCEMENT, Wheelhouse to Center Floor Pan					
	V Barracuda	1	2526 830-1			
23-34-40	PLUG, Wheelhouse Outer Panel					
	Sta. Wgn.	2	2189 098			
	PLUG, Quarter Panel Tailgate Window Switch Hole					
	Sta. Wgn.	2	2254 795			
	PLUG, Tailgate Opening Sill Panel					
	Sta. Wgn.	2	---- ---	---- ---	2574 831	
23-34-44	HOUSING and ROLLER, Tailgate Opening Sill to Tailgate Inner Cover					
	Sta. Wgn.	2	---- ---	---- ---	2602 283	
	SCREW	6	---- ---	---- ---	162 396	
23-34-52	BUMPER, Tailgate Opening Sill Panel					
	Sta. Wgn.	4	---- ---	---- ---	2663 925	
23-34-80	PANEL, Cowl Top and Dash					
	All	1	---- ---	2525 850	2576 120	
	PANEL, Cowl Top and Plenum Chamber					
	All	1	2493 684			
	PANEL, Cowl Side					
	Cv. Cp. Complete	1	2425 416-7	2425 840-1	2493 886-7	
	Except Cv. Cp. Complete	1	2576 368-9	2425 838-9		
	All Outer	1	---- ---	---- ---	2491 126-7	
	2 D. H. T., P Complete	1	---- ---	---- ---	2493 888-9	
	2 D. H. T., 4 D. H. T., D, C Complete	1	---- ---	---- ---	2493 888-9	
	2 D., 4 D., 4 D. H. T., Sta. Wgn., P Complete	1	---- ---	---- ---	2493 884-5	
	4 D., Sta. Wgn., D, C, Complete	1	---- ---	---- ---	2493 884-5	
	All Less Extension	1	---- ---	---- ---	---- ---	2448 140-1
	FRAME, Windshield					
	Cv. Cp. Complete	1	---- ---	---- ---	---- ---	2495 693
	2 D. H. T., 4 D. H. T., Complete	1	---- ---	---- ---	---- ---	2495 692
23-34-82	BRACKET, Cowl Side Panel to Sill					
	All	1	---- ---	---- ---	2492 486-7	

TYPE LETTERS Indicate: V - Valiant, L - Dart, R - Belvedere, W - Coronet, P - Plymouth, D - Dodge, C - Chrysler, Y - Imperial

★Indicates use as required.
⊟Indicates parts not listed in any previous parts book.
March 1966 Supersedes May 1965.

Printed in U.S.A.
Prices and specifications subject to change without notice.
Right and left part numbers are on same line, first number is right, second number is left.
* Indicates change or addition.

MyMopar.com

CODE	PART NAME AND DESCRIPTION	PER CAR	VALIANT / DART	PLYMOUTH BELVEDERE / DODGE CORONET	PLYMOUTH FURY / DODGE POLARA / CHRYSLER	IMPERIAL
23-34-0	**BODY PANELS - Cont'd**					
23-34-84	PLATE, Cowl Side Outer to Inner Panel Front					
	All	1	---- ---	---- ---	2492 746-7	
23-34-85	COVER PACKAGE, Cowl Upper Panel to Front Pillar Joint					
	All	1	---- ---	---- ---	---- ---	2196 479-80
	SCREW	2	---- ---	---- ---	---- ---	9413 268
23-34-89	PANEL and NUT, Cowl Side Inner					
	All	1	---- ---	---- ---	2492 856-7	
23-34-100	FILLER, Cowl Side to Door at Belt					
	All	1	---- ---	---- ---	---- ---	2571 582-3
23-34-101	T/PLATE, Cowl Top Panel Fender Mounting Bracket					
	All	2	---- ---	---- ---	2492 433	
23-34-110	PANEL, Dash					
	All w/NUT.	1	2571 422			
	All	1	---- ---	---- ---	---- ---	2571 928
23-34-116	COVER, Dash Panel Heater Motor Opening					
	All w/o Heater	1	2242 439			
	COVER. Dash Panel Air Duct					
	All w/o Heater or Air Conditioning	1	---- ---	---- ---	---- ---	1750 445
	COVER, Dash Panel Air Duct Drain Hole					
	All	2	---- ---	---- ---	---- ---	1810 565
23-34-117	SUPPORT, Dash Panel to Fender Side Shield					
	All Right	1	2242 426			
	Left	1	2492 741			
23-34-119	GASKET, Dash Panel Heater Motor Opening Cover					
	All w/o Heater	1	2242 425			
	GASKET, Heater to Dash Mounting					
	All w/Heater	1	2242 425			
23-34-120	PANEL, Front Door Outside Repair					
	V Barracuda	1	2253 844-5			
	2 D., P	1	2253 842-3	2425 792-3	2493 688-9	
	2 D. H. T., Cv. Cp., P	1	2253 844-5	2425 794-5	2493 694-5	
	2 D. H. T., Cv. Cp., D	1	---- ---	---- ---	2493 640-1	
	2 D. H. T., Cv. Cp., C	1	---- ---	---- ---	2493 600-1	2425 618-9
	4 D. H. T., P	1	---- ---	---- ---	2493 336-7	
	4 D. H. T., D	1	---- ---	---- ---	2493 474-5	2425 620-1
	4 D. H. T., C	1	---- ---	---- ---	2493 132-3	
	4 D., Sta. Wgn., P	1	2253 840-1	2425 788-9	2493 432-3	
	4 D., Sta. Wgn., D	1	---- ---	---- ---	2493 480-1	
	4 D., Sta. Wgn., C	1	---- ---	---- ---	2493 468-9	
	PANEL, Rear Door Outside Repair					
	4 D., Sta. Wgn., D	1	2425 168-9	2425 112-3	2493 438-9	
	4 D., Sta. Wgn., C	1	---- ---	---- ---	2493 426-7	
	4 D., P	1	---- ---	---- ---	2491 630-1	
	Sta. Wgn., P	1	---- ---	---- ---	2493 700-1	
	4 D. H. T., P	1	---- ---	---- ---	2491 634-5	
	4 D. H. T., D	1	---- ---	---- ---	2493 420-1	
	4 D. H. T., C	1	---- ---	---- ---	2493 112-3	2425 812-3

TYPE LETTERS Indicate: V - Valiant, L - Dart, R - Belvedere, W - Coronet, P - Plymouth, D - Dodge, C - Chrysler, Y - Imperial

★Indicates use as required.
⊟Indicates parts not listed in any previous parts book.
Right and left part numbers are on same line, first number is right, second number is left.
* Indicates change or addition.

Printed in U.S.A.
Prices and specifications subject to change without notice.
March 1966 Supersedes May 1965.

MyMopar.com

CODE	PART NAME AND DESCRIPTION	PER CAR	VALIANT / DART	PLYMOUTH BELVEDERE / DODGE CORONET	PLYMOUTH FURY / DODGE POLARA / CHRYSLER	IMPERIAL
23-34-0	**BODY PANELS - Cont'd**					
23-34-121	SHIELD, Dash Panel to Fender					
	All	1	2242 442-3	2571 478-9		
23-34-122	BRACE and C/NUT, Dash Panel No. 1 and No. 1A Body Hold-Down					
	All	1	---- ---	---- ---	---- ---	2491 710-11
23-34-123	PLUG, Dash Panel Heater Mounting Hole					
	All w/o Heater	3	---- ---	1777 881		
	PLUG, Dash Panel Auto. Trans. and Parking Sprag Opening					
	Except D	1	*2082 962			
	PLUG, Fresh Air Control Dash Hole					
	All w/o Heater or Air Conditioning	1	---- ---	---- ---	1652 067	
	PLUG, Cowl Side Pnl. Forward Welding Acess Hole					
	All	2	---- ---	---- ---	⊟2664 330	
23-34-125	PLATE, Dash Panel Accelerator Linkage Bracket Tapping					
	All	1	2217 287			
23-34-126	REINFORCEMENT, Dash Panel No. 1 and No. 1A Body Hold-Down Bolt Brace					
	All	1	---- ---	---- ---	---- ---	2491 730-1
23-34-130	GUSSET, Dash Panel to Steering Column Support					
	All	1	---- ---	---- ---	2491 153	
23-34-137	RETAINER, Folding Top Side Rear Rail Quarter Pillar					
	Cv. Cp.	1	2574 196-7			
23-34-164	BRACE, Deck Opening Upper Panel					
	2 D. H. T.	2	---- ---	2424 546		
	2 D., 4 D.	2	---- ---	2244 027		
23-34-166	PANEL, Deck Opening Upper					
	V Barracuda	1	2525 590			
	2 D., 2 D. H. T., 4 D., V	1	2242 493			
	2 D., 2 D. H. T., 4 D., L	1	2480 705			
	Cv. Cp., V, P	1	2526 608	2243 939	2481 145	
	Cv. Cp., L, D	1	2255 861	---- ---	2481 147	
	Cv. Cp., C	1	---- ---	---- ---	2481 147	2424 696
	2 D., 4 D.	1	---- ---	2482 818		
	2 D. H. T., C-H	1	---- ---	2422 067	2481 148	
	4 D., 4 D. H. T., D	1	---- ---	---- ---	2481 148	
	4 D., 4 D. H. T., C	1	---- ---	---- ---	2481 148	
	2 D. H. T., D	1	---- ---	---- ---	2481 146	
	2 D. H. T., C-L, C-M	1	---- ---	---- ---	2481 146	
	2 D., 2 D. H. T., 4 D., 4 D. H. T., P	1	---- ---	---- ---	2481 144	
	2 D. H. T., 4 D. H. T.	1	---- ---	---- ---	---- ---	2425 665
	2 D. H. T., 4 D. H. T., w/Shelf Panel	1	---- ---	---- ---	---- ---	2422 287

TYPE LETTERS Indicate: V - Valiant, L - Dart, R - Belvedere, W - Coronet, P - Plymouth, D - Dodge, C - Chrysler, Y - Imperial

★Indicates use as required.
⊟Indicates parts not listed in any previous parts book.
March 1966 Supersedes May 1965.

Prices and specifications subject to change without notice.
Printed in U.S.A.
Right and left part numbers are on same line, first number is right, second number is left.
* Indicates change or addition.

MyMopar.com

CODE	PART NAME AND DESCRIPTION	PER CAR	VALIANT / DART	PLYMOUTH BELVEDERE / DODGE CORONET	PLYMOUTH FURY / DODGE POLARA / CHRYSLER	IMPERIAL
23-34-0	**BODY PANELS - Cont'd**					
23-34-167	PANEL, Deck Opening Lower (inside)					
	V, W, except Sta. Wgn.	1	2422 006	2576 077		
	L, R, except Sta. Wgn.	1	2243 589	2576 178		
	P, except Sta. Wgn.	1	---- ---	---- ---	2525 873	
	D, except Sta. Wgn.	1	---- ---	---- ---	2525 874	
	C, except Sta. Wgn., w/Back-Up Lamp Holes	1	---- ---	---- ---	2525 876	
	w/o Back-Up Lamp Holes	1	---- ---	---- ---	2525 875	
	All	1	---- ---	---- ---	---- ---	2255 495
23-34-176	EXTENSION, Deck Opening Upper Inner Panel					
	V Barracuda	1	2574 020-1			
	EXTENSION, Deck Opening Lower Panel Reinforcement					
	2 D., Cv. Cp., 4 D., 4 D. H. T., D	1	---- ---	---- ---	2483 254-5	
	EXTENSION, Deck Opening Lower Panel Side					
	All	1	---- ---	---- ---	---- ---	2422 296-7
	EXTENSION, Deck Opening Upper Panel to Rear Window					
	2 D. H. T., 4 D. H. T.	1	---- ---	---- ---	---- ---	2218 700
23-34-178	PLUG, Deck Opening Lower Panel Reinforcement					
	2 D. H. T., Cv. Cp., 4 D., 4 D. H. T., C	3	---- ---	---- ---	2527 781	
	PLUG, Deck Opening Upper Inner					
	V Barracuda Black	4	*4163 VX9			
23-34-179	REINFORCEMENT, Deck Opening Upper or Lower Panel					
	V, except Sta. Wgn. Lower	2	2423 214			
	L, R, except Sta. Wgn. Lower	2	2243 596	2255 788		
	W, except Sta. Wgn., Lower	2	---- ---	2482 558		
	Cv. Cp., P Upper	1	---- ---	---- ---	2482 257	
	Cv. Cp., D Upper	1	---- ---	---- ---	2482 259	
	Cv. Cp., C Upper	1	---- ---	---- ---	2482 259	
	Cv. Cp. Upper to Belt Bar	1	---- ---	---- ---	---- ---	2480 189
	SUPPORT, Deck Opening Lower Panel Reinforcement to Floor Pan					
	2 D. H. T., Cv. Cp., 4 D., 4 D. H. T., D	1	---- ---	---- ---	2482 268	
	EXTENSION, Deck Opening Lower Panel Reinforcement P, except Sta. Wgn.	1	---- ---	---- ---	2482 648-9	
23-34-184	LETTER, NAME PLATE OR MEDALLION, Deck Opening Lower Panel (1)					
23-34-187	COVER, Deck Opening Upper Panel Air Exhaust					
	V Barracuda	2	2573 606			
	SEAL, Deck Opening Upper Pnl.					
	2 D. H. T., 4 D	1	---- ---	⊟2480 632		
23-34-190	FILLER, Deck Opening Upper Panel Center Moulding to Window Glass					
	V Barracuda	1	2528 391			
23-34-203	PAD, Quarter Outside Panel Strainer					
	Cv. Cp., 5 Ft.	★	---- ---	1242 974		
23-34-207	HANDLE, Quarter Spare Tire Cover					
	Sta. Wgn., P, D, C	1	---- ---	---- ---	2520 985	

NOTE 1: See Exterior Moulding Illustrations and Moulding Legends in front of Group 23 Body section.

TYPE LETTERS Indicate: V - Valiant, L - Dart, R - Belvedere, W - Coronet, P - Plymouth, D - Dodge, C - Chrysler, Y - Imperial

★Indicates use as required.
⊟Indicates parts not listed in any previous parts book.
Right and left part numbers are on same line, first number is right, second number is left.
* Indicates change or addition.

Printed in U.S.A.
Prices and specifications subject to change without notice.
March 1966 Supersedes May 1965.

MyMopar.com

CODE	PART NAME AND DESCRIPTION	PER CAR	VALIANT / DART	PLYMOUTH BELVEDERE / DODGE CORONET	PLYMOUTH FURY / DODGE POLARA / CHRYSLER	IMPERIAL
23-34-0	**BODY PANELS - Cont'd**					
23-34-212	PANEL, Quarter Wheel Opening					
	Except Sta. Wgn., P	1	---- ---	---- ---	2528 048-9	
	2 D. H. T., Cv. Cp., 4 D., 4 D. H. T., D-L, D-H	1	---- ---	---- ---	2528 050-1	
	2 D. H. T., Cv. Cp., 4 D., 4 D. H. T., C Prime	1	---- ---	---- ---	2526 812-3	
	Sta. Wgn., C	1	---- ---	---- ---	2528 374-5	
23-34-213	GASKET, Quarter Wheel Opening Panel					
	All, C	2	---- ---	---- ---	2603 290	
	P, except Sta. Wgn.	1	---- ---	---- ---	2528 384-5	
	D, except Sta. Wgn.	1	---- ---	---- ---	2528 392-3	
	SEAL, Quarter Outside Panel to Rear Bumper					
	D, except Sta. Wgn.	2	---- ---	---- ---	2574 239	
23-34-214	EXTENSION, Quarter Panel Wheel Opening Flange					
	2 D. H. T., Cv. Cp., C Front	1	---- ---	---- ---	2484 764-5	
	All, C Rear	1	---- ---	---- ---	2529 922-3	
23-34-216	PIN, Quarter Wheel Opening Panel Locating					
	All	6	---- ---	---- ---	2528 429	
	NUT and WASHER	6	---- ---	---- ---	6023 204	
23-34-217	SPACER, Quarter Wheel Opening Panel Pin					
	C Front	2	---- ---	---- ---	2528 653	
	Rear	2	---- ---	---- ---	2528 654	
	SPACER, Quarter Wheel Opening Panel					
	C	4	---- ---	---- ---	2603 292	
23-34-218	REINFORCEMENT, Quarter Outside Panel Lock Face					
	V Barracuda	1	2481 200-1			
	2 D. H. T., Cv. Cp., V	1	2481 200-1			
23-34-219	SUPPORT, Quarter Outside Inner Panel to Brace					
	Cv. Cp., L	1	2423 648-9			
23-34-221	SEAL, Quarter Inside Upper Panel to Roof Panel Side Extension Baffle					
	Sta. Wgn.	2	2243 834			
23-34-223	REINFORCEMENT, Quarter Spare Tire Cover Handle Opening					
	Sta. Wgn., All	1	---- ---	---- ---	2520 990	
23-34-229	TIE PLATE, Quarter Panel to Wheelhouse to Side Sill Outer Panel					
	2 D., 2 D. H. T., 4 D., Sta. Wgn., Cv. Cp., V	1	2242 470-1			
	Sta. Wgn., L	1	2242 470-1			
	2 D., 2 D. H. T., 4 D., Cv. Cp., L	1	2243 566-7			
	TIE PLATE, Body Side Sill to Wheelhouse					
	4 D., Sta. Wgn.	1	---- ---	2167 180-1		
	4 D., 4 D. H. T., P	1	---- ---	---- ---	2481 540-1	
	4 D. H. T., Sta. Wgn., 4 D., D	1	---- ---	---- ---	2481 542-3	
	Sta. Wgn., P	1	---- ---	---- ---	2481 542-3	
	Sta. Wgn., C	1	---- ---	---- ---	2481 542-3	
	4 D., 4 D. H. T., C	1	---- ---	---- ---	2481 544-5	
	TIE PLATE, Quarter Inside Panel to Wheelhouse					
	2 D., 2 D. H. T., Cv. Cp.	1	---- ---	2422 578-9		

TYPE LETTERS Indicate: V - Valiant, L - Dart, R - Belvedere, W - Coronet, P - Plymouth, D - Dodge, C - Chrysler, Y - Imperial

★Indicates use as required.
⊟Indicates parts not listed in any previous parts book.
March 1966 Supersedes May 1965.

Printed in U.S.A.
Prices and specifications subject to change without notice.
Right and left part numbers are on same line, first number is right, second number is left.
• Indicates change or addition.

MyMopar.com

CODE	PART NAME AND DESCRIPTION	PER CAR	VALIANT / DART	PLYMOUTH BELVEDERE / DODGE CORONET	PLYMOUTH FURY / DODGE POLARA / CHRYSLER	IMPERIAL
23-34-0	**BODY PANELS - Cont'd**					
23-34-229	TIE PLATE, Body Side Sill to Quarter Inside Panel					
	2 D., P	1	---- ---	---- ---	2481 876-7	
	2 D. H. T., Cv. Cp.	1	---- ---	---- ---	2481 876-7	
23-34-230	STRAINER, Quarter Outside Panel					
	Cv. Cp. w/BRACKET	1	---- ---	2424 388-9		
	2 D. H. T., Cv. Cp., C w/NUT	2	---- ---	---- ---	2527 968	
	2 D. H. T., Cv. Cp.	1	---- ---	---- ---	---- ---	2495 908-9
23-34-231	BRACKET, Quarter Outside Panel Strainer to Wheelhouse Support					
	Cv. Cp.	2	---- ---	2424 386		
	BRACKET, Quarter Outside Outer Panel Support Rear					
	2 D. H. T., Cv. Cp.	1	---- ---	---- ---	---- ---	2492 214-5
23-34-232	BUMPER, Quarter Inside Panel Lower					
	Sta. Wgn.	2	2094 618			
	PLUG, Quarter Panel to Wheelhouse to Side Sill Outer Panel Tie Plate					
	2 D., 2 D. H. T., Cv. Cp., L	2	2423 815			
	PLUG, Body Side Sill to Wheelhouse Tie Plate					
	Sta. Wgn. Right	1	---- ---	2480 148		
	PLUG, Wheelhouse Quarter Panel					
	Sta. Wgn. Right	1	---- ---	---- ---	2094 985	
	PLUG, Wheelhouse Spare Tire Housing Lower Panel					
	Sta. Wgn.	1	---- ---	---- ---	2603 887	
23-34-233	PANEL, Quarter Outside Inner					
	V Barracuda	1	2484 584-5			
	Cv. Cp. V	1	2484 266-7			
	2 D., 2 D. H. T., 4 D., V	1	2481 068-9			
	Cv. Cp., L Upper	1	2255 986-7			
	2 D., 2 D. H. T., 4 D., L Upper	1	2480 706-7			
	2 D., 2 D. H. T., 4 D., L Lower	1	2483 918-9			
	2 D., 2 D. H. T., Cv. Cp., 4 D., L Center	1	2482 542-3			
	Cv. Cp.	1	---- ---	---- ---	---- ---	2424 694-5
	2 D. H. T.	1	---- ---	---- ---	---- ---	2255 462-3
	4 D. H. T.	1	---- ---	---- ---	---- ---	2255 464-5
	2 D.H. T., 4 D. H. T., Extension	1	---- ---	---- ---	---- ---	2422 292-3
	2 D. H. T. Upper Extension	1	---- ---	---- ---	---- ---	2422 330-1
	4 D. H. T., Y-M Upper Extension	1	---- ---	---- ---	---- ---	2422 334-5
	4 D. H. T., Y-H Upper Extension	1	---- ---	---- ---	---- ---	2422 330-1
23-34-234	PANEL, Quarter Inside					
	V Barracuda	1	2484 802-3			
	2 D. Front	1	2484 326-7			
	2 D. H. T. Front	1	2484 328-9			
	Cv. Cp. Front	1	2484 330-1			
	Cv. Cp., L Rear	1	2424 000-1			
	2 D., 2 D. H. T., 4 D., V Upper	1	2242 868-9			

TYPE LETTERS Indicate: V - Valiant, L - Dart, R - Belvedere, W - Coronet, P - Plymouth, D - Dodge, C - Chrysler, Y - Imperial

★Indicates use as required.
⊟Indicates parts not listed in any previous parts book.
Right and left part numbers are on same line, first number is right, second number is left.
• Indicates change or addition.

Printed in U.S.A.
Prices and specifications subject to change without notice.
March 1966 Supersedes May 1965.

MyMopar.com

CODE	PART NAME AND DESCRIPTION	PER CAR	VALIANT / DART	PLYMOUTH BELVEDERE / DODGE CORONET	PLYMOUTH FURY / DODGE POLARA / CHRYSLER	IMPERIAL
23-34-0	**BODY PANELS - Cont'd**					
23-34-234	PANEL - Cont'd					
	2 D., 2 D. H. T., 4 D., L Upper	1	2481 046-7			
	2 D., 2 D. H. T., 4 D., V Lower	1	2242 464-5			
	2 D., 2 D. H. T., 4 D., L Lower	1	2243 568-9			
	Sta. Wgn. Upper	1	2242 740-1			
	Sta. Wgn. w/Upper Rear EXTENSION, Lower	1	2493 448-9			
	2 D., 4 D. Upper	1	---- ---	2422 044-5		
	2 D., P	1	---- ---	2244 880-1	2484 362-3	
	2 D. H. T., D	1	---- ---	2422 072-3	2484 882-3	
	2 D. H. T. Rear	1	---- ---	2422 046-7		
	Cv. Cp., P	1	---- ---	2244 224-5	2528 890-1	
	Sta. Wgn. Front	1	---- ---	2166 182-3		
	Sta. Wgn. Rear	1	---- ---	2166 184-5		
	2 D. H. T., P Rear Lower	1	---- ---	---- ---	*2482 036-7	
	2 D. H. T., P	1	---- ---	---- ---	2482 032-3	
	2 D., 4 D., 4 D. H. T., P Upper	1	---- ---	---- ---	2481 480-1	
	2 D., 4 D., 4 D. H. T., P Lower	1	---- ---	---- ---	2481 556-7	
	Cv. Cp., D	1	---- ---	---- ---	2528 892-3	
	4 D., D-L, C1 Upper	1	---- ---	---- ---	2484 532-3	
	4 D., D Lower	1	---- ---	---- ---	2484 364-5	
	4 D., C1 Lower	1	---- ---	---- ---	2482 034-5	
	4 D. H. T., D, C Upper	1	---- ---	---- ---	2482 042-3	
	4 D. H. T., D Lower	1	---- ---	---- ---	2483 250-1	
	2 D. H. T., C3	1	---- ---	---- ---	2483 286-7	
	2 D. H. T., C3 Upper	1	---- ---	---- ---	2482 042-3	
	2 D. H. T., C3 Lower	1	---- ---	---- ---	2483 200-1	2422 276-7
	4 D. H. T., C Lower	1	---- ---	---- ---	2483 200-1	2422 276-7
	2 D. H. T., D Rear Lower	1	---- ---	---- ---	2482 038-9	
	Cv. Cp., C1, C2	1	---- ---	---- ---	2528 888-9	2424 678-9
	2 D. H. T., P, D, C1, C2 Rear Upper	1	---- ---	---- ---	2482 044-5	
	2 D. H. T., C1, C2 Rear Lower	1	---- ---	---- ---	2482 040-1	
	2 D. H. T., C1, C2	1	---- ---	---- ---	2484 884-5	2255 468-9
	Sta. Wgn. Front Upper	1	---- ---	---- ---	2484 396-7	
	Sta. Wgn. Front Lower	1	---- ---	---- ---	2481 684-5	
	2 D. H. T., 4 D. H. T., Rear Upper	1	---- ---	---- ---	---- ---	2573 206-7
23-34-235	PANEL, Quarter Outside Repair					
	V Barracuda	1	2484 580-1			
	2 D., V, R, P	1	2484 268-9	2484 930-1	2481 112-3	
	2 D., L, W	1	2482 534-5	2482 548-9		
	2 D. H. T., V, R, P	1	2484 460-1	2484 932-3	2481 114-5	
	2 D. H. T., L, W, D	1	2482 536-7	2482 550-1	2481 124-5	
	Cv. Cp., V, R, P	1	2484 270-1	2484 934-5	2481 116-7	
	Cv. Cp., L, W, D	1	2482 538-9	2482 524-5	2481 126-7	
	4 D., V, R, C	1	2484 462-3	2484 936-7	2481 138-9	
	4 D., L, W, D	1	2482 540-1	2482 552-3	2481 128-9	
	Sta. Wgn., V, R	1	2482 526-7	2482 530-1		
	Sta. Wgn., L, W	1	2482 528-9	2482 532-3		
	4 D., 4 D. H. T., P	1	---- ---	---- ---	2481 118-9	
	4 D. H. T., D	1	---- ---	---- ---	2481 130-1	2481 794-5

TYPE LETTERS Indicate: V - Valiant, L - Dart, R - Belvedere, W - Coronet, P - Plymouth, D - Dodge, C - Chrysler, Y - Imperial

★Indicates use as required.
⊟Indicates parts not listed in any previous parts book.

Printed in U.S.A.

Prices and specifications subject to change without notice.
Right and left part numbers are on same line, first number is right, second number is left.
* Indicates change or addition.

March 1966 Supersedes May 1965.

MyMopar.com

CODE	PART NAME AND DESCRIPTION	PER CAR	VALIANT / DART	PLYMOUTH BELVEDERE / DODGE CORONET	PLYMOUTH FURY / DODGE POLARA / CHRYSLER	IMPERIAL
23-34-0	**BODY PANELS - Cont'd**					
23-34-235	PANEL - Cont'd.					
	Sta.Wgn., P	1	---- ---	---- ---	2481 120-1	
	Sta. Wgn., D	1	---- ---	---- ---	2481 132-3	
	2 D. H. T., C1, C2	1	---- ---	---- ---	2481 134-5	
	2 D. H. T., C3	1	---- ---	---- ---	2483 284-5	2481 792-3
	Cv. Cp., C	1	---- ---	---- ---	2481 136-7	2481 792-3
	4 D. H. T., C	1	---- ---	---- ---	2481 140-1	
	Sta.Wgn., C	1	---- ---	---- ---	2481 142-3	
23-34-236	EXTENSION, Quarter Inside Panel					
	Sta.Wgn. Lower Panel Upper Rear	1	2244 900-1			
	Cv. Cp., V Reinf. to Wheelhouse	1	2424 100-1			
	Cv. Cp., L Reinf. to Wheelhouse	1	2424 102-3			
	Sta.Wgn. To Rear Upper Pillar	1	---- ---	2254 608-9		
	2 D., P	1	---- ---	---- ---	2484 824-5	
	4 D., 4 D. H. T., D Lower	1	---- ---	---- ---	2484 352-3	
	4 D., 4 D. H. T., P Lower	1	---- ---	---- ---	2483 210-1	
	4 D., 4 D. H. T., C Lower	1	---- ---	---- ---	2482 674-5	
	2 D. H. T. Rear	1	---- ---	---- ---	---- ---	2422 358-9
	2 D. H. T. Belt Reinf.	1	---- ---	---- ---	---- ---	2218 988-9
	Cv. Cp. Belt Reinf.	1	---- ---	---- ---	2529 038-9	
	2 D. H. T., Cv. Cp. To Lock Pillar	1	---- ---	---- ---	---- ---	2424 722-3
23-34-237	PLUG, Quarter Inside Lower Panel					
	Sta.Wgn.	2	2423 829			
	2 D., 2 D. H. T., Cv. Cp. To Wheelhouse Tie Plate	2	2602 110	2573 869		
23-34-238	NAME PLATE or LETTERS, Quarter Panel Outside (1)					
23-34-239	PLATE, Quarter Outside Inner Panel Upper Extension Name Plate Backing					
	4 D. H. T. "Le"	2	---- ---	---- ---	---- ---	2480 884
	"Baron"	2	---- ---	---- ---	---- ---	2480 885
23-34-240	DEFLECTOR, Quarter Outside Panel Stone (1)					
23-34-242	EXTENSION, Quarter Outside Panel					
	Sta. Wgn., V, R	1	2482 518-9	2482 522-3		
	Sta.Wgn., L, W	1	2422 988-9	2483 854-5		
	2 D., 2 D. H. T., Cv. Cp., 4 D., L Inner Center Panel	1	2244 252-3			
	2 D., 2 D. H. T., Cv. Cp., 4 D., L To Deck Opening Lower Panel	1	2244 406-7			
	2 D., 4 D., R To Rear Window Side Frame	1	---- ---	2424 936-7		
	2 D., 4 D., W To Rear Window Side Frame	1	---- ---	2484 378-9		
	P, except Sta.Wgn.	1	---- ---	---- ---	2481 488-9	
	2 D. H. T., Cv. Cp., 4 D., 4 D. H. T., D	1	---- ---	---- ---	2482 642-3	
	Sta.Wgn., P Rear Upper	1	---- ---	---- ---	2484 710-1	
	Sta.Wgn., D Rear Upper	1	---- ---	---- ---	2484 714-5	
	Sta.Wgn., D Rear Lower	1	---- ---	---- ---	2484 716-7	
	C, except Sta.Wgn. Rear	1	---- ---	---- ---	2482 670-1	
	Sta. Wgn., C Rear Upper	1	---- ---	---- ---	2482 606-7	
	Sta.Wgn., C Rear Lower	1	---- ---	---- ---	2482 608-9	

NOTE 1: See Exterior Moulding Illustrations and Moulding Legends in front of Group 23 Body section.

TYPE LETTERS Indicate: V - Valiant, L - Dart, R - Belvedere, W - Coronet, P - Plymouth, D - Dodge, C - Chrysler, Y - Imperial

★Indicates use as required.
⊟Indicates parts not listed in any previous parts book.
Right and left part numbers are on same line, first number is right, second number is left.
* Indicates change or addition.

Printed in U.S.A.
Prices and specifications subject to change without notice.
March 1966 Supersedes May 1965.

MyMopar.com

CODE	PART NAME AND DESCRIPTION	PER CAR	VALIANT / DART	PLYMOUTH BELVEDERE / DODGE CORONET	PLYMOUTH FURY / DODGE POLARA / CHRYSLER	IMPERIAL
23-34-0	**BODY PANELS - Cont'd**					
23-34-246	REINFORCEMENT, Quarter Outside Panel at Belt					
	2 D., 2 D. H. T., V	1	2243 672-3			
	Cv. Cp., V, P	1	2422 128-9	---- ---	2484 624-5	
	Cv. Cp., L	1	2422 130-1			
	2 D. H. T., P, D, C-L, C-M	1	---- ---	2424 910-1	2484 242-3	
	Cv. Cp., D, C	1	---- ---	---- ---	2484 626-7	
	2 D. H. T., P, D, C Front	1	---- ---	---- ---	2573 036-7	
	2 D. H. T., C-H Rear	1	---- ---	---- ---	2484 766-7	
	REINFORCEMENT, Quarter Outside Panel Extension Jacking					
	Sta. Wgn., V	2	2243 638			
	REINFORCEMENT, Quarter Outside Panel to Floor Pan					
	R, except Sta. Wgn.	1	---- ---	2255 776-7		
	REINFORCEMENT, Quarter Outside Panel to Belt Bar Side Upper					
	Cv. Cp.	1	---- ---	2423 594-5		
23-34-248	SUPPORT, Quarter Inside Panel Rear to Rear Floor Pan Filler					
	Sta. Wgn.	1	2243 838-9			
	4 D., D, C-L To Roof Extension . . .	1	---- ---	---- ---	2484 536-7	
	BRACE, Quarter Inside Panel to Wheelhouse					
	Cv. Cp., P	1	---- ---	---- ---	2529 052-3	
	Cv. Cp., D	1	---- ---	---- ---	2529 054-5	
	Cv. Cp., C	1	---- ---	---- ---	2529 056-7	
23-34-249	FILLER, Quarter Inside Panel Rear to Rear Floor Pan					
	Sta. Wgn.	1	2484 112-3			
	REINFORCEMENT, Quarter Inside Panel at Belt					
	Cv. Cp., P, D, C-L, C-M	1	---- ---	---- ---	2526 732-3	
	Cv. Cp., C-H	1	---- ---	---- ---	2483 352-3	
	2 D. H. T., P, D, C-L, C-M	1	---- ---	---- ---	2483 350-1	
	REINFORCEMENT, Quarter Inside Panel Upper					
	2 D., Cv. Cp.	1	---- ---	---- ---	---- ---	2424 748-9
	REINFORCEMENT, Quarter Outside Inner Panel to Wheelhouse					
	2 D. H. T., 4 D. H. T.	1	---- ---	---- ---	---- ---	2218 760-1
23-34-253	DOOR, Deck Opening Lower Panel Fuel Filler					
	2 D., Cv. Cp., 4 D., 4 D. H. T., C-L w/HINGE	1	---- ---	---- ---	2484 272	
	2 D. H. T., Cv. Cp., C-P	1	---- ---	---- ---	2573 815	
	2 D. H. T., Cv. Cp., 4 D. H. T., C-M	1	---- ---	---- ---	2573 813	
	2 D. H. T., 4 D. H. T., 4 D. 6 Window, C-H	1	---- ---	---- ---	2573 814	
	DOOR, Quarter Panel Fuel Filler					
	P, except Sta. Wgn.	1	---- ---	---- ---	2576 157	
23-34-255	SPRING, Fuel Tank Filler Opening Door					
	P	1	---- ---	---- ---	2481 950	
	C	1	---- ---	---- ---	2481 089	
23-34-257	GUSSET, Quarter Belt Bar to Wheelhouse to Rear Quarter Pillar					
	Cv. Cp., V, P	1	2255 988-9	2255 718-9	2482 010-1	
	Cv. Cp., L, D	1	2255 990-1	---- ---	2482 012-3	
	Cv. Cp., C	1	---- ---	---- ---	2482 014-5	

TYPE LETTERS Indicate: V - Valiant, L - Dart, R - Belvedere, W - Coronet, P - Plymouth, D - Dodge, C - Chrysler, Y - Imperial

★Indicates use as required.
⊟Indicates parts not listed in any previous parts book.
March 1966 Supersedes May 1965.

Printed in U.S.A.
Prices and specifications subject to change without notice.
Right and left part numbers are on same line, first number is right, second number is left.
* Indicates change or addition.

MyMopar.com

CODE	PART NAME AND DESCRIPTION	PER CAR	VALIANT / DART	PLYMOUTH BELVEDERE / DODGE CORONET	PLYMOUTH FURY / DODGE POLARA / CHRYSLER	IMPERIAL
23-34-0	**BODY PANELS - Cont'd**					
23-34-259	SEAL, Quarter Inside Panel Fuel Tank Filler Tube					
	Sta. Wgn.	1	2242 360			
	SEAL, Fuel Tank Filler Tube to Quarter Panel					
	Sta. Wgn.	1	---- ---	2123 656		
	SEAL, Quarter Panel Fuel Filler Tube Housing					
	P, except Sta. Wgn.	1	---- ---	---- ---	2483 906	
23-34-264	REINFORCEMENT, Quarter Panel Fuel Filler Opening					
	P, except Sta. Wgn.	1	---- ---	---- ---	2484 383	
23-34-270	BUMPER, Quarter Panel Fuel Filler Door					
	P, except Sta. Wgn.	2	---- ---	---- ---	2481 953	
	BUMPER, Deck Opening Lower Panel Fuel Filler Door					
	C, except Sta. Wgn.	2	---- ---	---- ---	2602 132	
	STOP, Deck Opening Lower Panel Fuel Filler Door					
	C, except Sta. Wgn.	2	---- ---	---- ---	2483 272	
23-34-275	BUMPER, Quarter Outside Panel Jack					
	2 D., 2 D. H. T., Cv. Cp., 4 D., V	1	2243 220-1			
	2 D., 2 D. H. T., Cv. Cp., 4 D., L, W	1	2243 800-1	2526 614-5		
	Sta. Wgn.	1	2244 130-1			
	2 D. H. T., Cv. Cp., 4 D., 4 D. H. T., D	1	---- ---	---- ---	2529 430-1	
23-34-279	BRACKET, Rear Stone Deflector to Rear Floor Pan Attaching					
	Sta. Wgn.	1	---- ---	2252 111		
23-34-280	FILLER, Quarter Outside Panel					
	W, except Sta. Wgn.	1	---- ---	2484 660-1		
	Sta. Wgn. To Rear Lower Pillar . .	1	2244 350-1			
	Cv. Cp. Front Upper Corner . . .	1	---- ---	2244 706-7		
	FILLER, Quarter Outside Panel Extension to Rear Bumper					
	C-L except Sta. Wgn.	1	---- ---	---- ---	2603 326-7	
23-34-283	COVER, Quarter Panel Back-Up Lamp					
	2 D., 4 D., W-L	2	---- ---	2575 109		
23-34-285	SUPPORT, Quarter Outside Inner Panel Jacking					
	2 D., 2 D. H. T., Cv. Cp., 4 D., L	1	2244 904-5			
23-34-293	HEADER, Roof Rear					
	Sta. Wgn. Complete	1	---- ---	---- ---	2576 018	
23-34-301	PANEL, Roof					
	V Barracuda	1	2484 562			
	2 D., 2 D. H. T., 4 D., V	1	2481 072			
	2 D., 2 D. H. T., 4 D., L	1	2480 704			
	Sta. Wgn.	1	2242 780	2480 729	2481 168	
	2 D. H. T., C-H	1	---- ---	2422 058	2481 167	2422 234
	2 D., 4 D.	1	---- ---	2422 059		
	4 D., D, C-L, C-H	1	---- ---	---- ---	2481 166	
	4 D. H. T., D, C, Y-M	1	---- ---	---- ---	2481 167	2422 233
	2 D. H. T., P, D, C-L, C-M	1	---- ---	---- ---	2481 165	
	2 D., 4 D., 4 D. H. T., P	1	---- ---	---- ---	2481 164	
	4 D. H. T., Y-H	1	---- ---	---- ---	---- ---	2422 234

TYPE LETTERS Indicate: V - Valiant, L - Dart, R - Belvedere, W - Coronet, P - Plymouth, D - Dodge, C - Chrysler, Y - Imperial

★Indicates use as required.
⊟Indicates parts not listed in any previous parts book.
Right and left part numbers are on same line, first number is right, second number is left.
* Indicates change or addition.

Printed in U.S.A.
Prices and specifications subject to change without notice.
March 1966 Supersedes May 1965.

MyMopar.com

CODE	PART NAME AND DESCRIPTION	PER CAR	VALIANT / DART	PLYMOUTH BELVEDERE / DODGE CORONET	PLYMOUTH FURY / DODGE POLARA / CHRYSLER	IMPERIAL
23-34-0	**BODY PANELS - Cont'd**					
23-34-302	EXTENSION, Roof Panel Side					
	V Barracuda	1	2484 582-3			
	2 D., 2 D. H. T., 4 D., V	1	2242 548-9			
	Sta. Wgn., V	1	2242 776-7	2217 534-5		
	4 D. H. T., D, C	1	---- ---	---- ---	2481 158-9	
	2 D. H. T., C-H	1	---- ---	---- ---	2481 158-9	
	4 D. 4 Window, D, C	1	---- ---	---- ---	2484 530-1	
	4 D. 6 Window, D, C	1	---- ---	---- ---	2481 156-7	
23-34-304	SUPPORT, Roof Panel Extension to Wheelhouse Outer Panel					
	2 D., 2 D. H. T., 4 D., V	1	2242 528-9			
	REINFORCEMENT, Roof Panel to Quarter Outside Panel Joint					
	2 D., 4 D.	1	---- ---	2424 524-5		
23-34-329	OVERLAY, Quarter Outside Finish Panel					
	D-H, Sta. Wgn.	2	---- ---	---- ---	*2605 036	
23-34-334	MEDALLION, ORNAMENT or LOUVER, Quarter Panel (1)					
23-34-346	BRACKET, Wheelhouse Inner Panel Fuel Tank Stop					
	Sta. Wgn.	1	---- ---	2251 800		
	BRACKET, Wheelhouse to Fuel Tank Stone Deflector					
	Sta. Wgn.	1	---- ---	2251 724		
	Sta. Wgn. Lower	1	---- ---	---- ---	2483 978	
	BRACKET, Wheelhouse to Roof Side Rail Support					
	2 D. H. T., 4 D. H. T.	1	---- ---	---- ---	---- ---	2422 376-7
23-34-354	PANEL, Windshield Header					
	Except Cv. Cp.	1	2253 956			
23-36-0	**PILLARS**					
23-36-4	COVER, Body Front Lower Pillar to Fender					
	All, C	1	---- ---	---- ---	2571 740-1	
23-36-5	PILLAR, Body Center					
	4 D., Sta. Wgn.	1	2425 854-5	2425 888-9		
	4 D. H. T., P, D-L, D-H, C	1	---- ---	---- ---	2493 444-5	2425 892-3
	4 D., Sta. Wgn., P, D-L, D-H, C-L, C-H	1	---- ---	---- ---	2493 446-7	
23-36-6	PANEL, Center Pillar Inside Finish					
	4 D. H. T.	1	---- ---	---- ---	2571 040-1	
	4 D., Sta. Wgn.	1	---- ---	2241 790-1	2571 072-3	
23-36-14	EXTENSION, Front Hinge Pillar					
	Cv. Cp.	1	---- ---	---- ---	---- ---	1960 726-7
	2 D. H. T., 4 D. H. T.	1	---- ---	---- ---	---- ---	1877 318-9
23-36-15	SUPPORT, Front Pillar Extension to Windshield Side Frame					
	Cv. Cp.	2	---- ---	---- ---	2529 429	
23-36-18	PLUG, Rear Lower Pillar					
	Sta. Wgn.	1	2254 626			

NOTE 1: See Exterior Moulding Illustrations and Moulding Legends in front of Group 23 Body section.

TYPE LETTERS Indicate: V - Valiant, L - Dart, R - Belvedere, W - Coronet, P - Plymouth, D - Dodge, C - Chrysler, Y - Imperial

★Indicates use as required.
⊟Indicates parts not listed in any previous parts book.
March 1966 Supersedes May 1965.

Printed in U.S.A.
Prices and specifications subject to change without notice.
Right and left part numbers are on same line, first number is right, second number is left.
* Indicates change or addition.

MyMopar.com

CODE	PART NAME AND DESCRIPTION	PER CAR	VALIANT / DART	PLYMOUTH BELVEDERE / DODGE CORONET	PLYMOUTH FURY / DODGE POLARA / CHRYSLER	IMPERIAL
23-36-0	**PILLARS - Cont'd**					
23-36-20	EXTENSION, Body Center Pillar Inner					
	4 D. H. T.	1	---- ---	---- ---	2492 680-1	
23-36-21	COVER, Center Pillar Hinge					
	4 D., Sta. Wgn. Lower	2	2217 218			
	4 D. H. T.	4	---- ---	---- ---	---- ---	1751 793
	COVER, Front Body Pillar Hinge					
	All	1	---- ---	---- ---	---- ---	2422 240-1
23-36-25	ANTI-RATTLER, Front Pillar Hinge Cover					
	All 2" long	6	---- ---	---- ---	---- ---	2492 234
	5" long	2	---- ---	---- ---	---- ---	2492 108
	4 D. H. T. Rear Door Hinge Pillar	2	---- ---	---- ---	2571 450	
23-36-30	BUMPER, Body Center Pillar to Rear Door Upper Frame					
	4 D., 4 D. H. T., Sta. Wgn.	2	---- ---	---- ---	2588 471	
	BUMPER, Body Front Cover Pillar to Fender Cover					
	C	6	---- ---	---- ---	*2578 820	
23-36-31	SEAL, Rear Upper Pillar to Rear Upper Pillar Reinforcement Baffle					
	Sta. Wgn.	2	2243 835			
	SEAL, Rear Upper Pillar					
	Sta. Wgn.	2	---- ---	2251 905		
23-36-36	BRACKET and NUT, Body Center Pillar Assist Strap Support					
	4 D., P-L	2	---- ---	---- ---	2588 148	
23-36-53	PILLAR, Rear Body Lock					
	2 D., P Upper	1	2425 396-7	2252 370-1	2482 070-1	
	2 D., P Lower	1	---- ---	---- ---	2482 064-5	
	Cv. Cp., P	1	---- ---	---- ---	2484 758-9	
	4 D., 4 D. H. T., P	1	---- ---	---- ---	2481 558-9	
	Sta. Wgn., P	1	---- ---	---- ---	2481 644-5	
	2 D. H. T., P	1	---- ---	---- ---	2482 066-7	
	Cv. Cp., D	1	---- ---	---- ---	2484 760-1	
	2 D. H. T., D	1	---- ---	---- ---	2482 076-7	
	4 D. H. T., D	1	---- ---	---- ---	2482 080-1	
	4 D., D Lower	1	---- ---	---- ---	2482 078-9	
	Sta. Wgn., D Lower	1	---- ---	---- ---	2481 646-7	
	4 D., D, C1, C3 Upper	1	---- ---	---- ---	2482 082-3	
	4 D. H. T., C	1	---- ---	---- ---	2481 554-5	2255 466-7
	2 D. H. T., C	1	---- ---	---- ---	2482 088-9	
	4 D., C, C3 Lower	1	---- ---	---- ---	2482 090-1	
	Sta. Wgn. Upper	1	---- ---	---- ---	2483 868-9	
	Sta. Wgn., C1, C3 Lower	1	---- ---	---- ---	2481 648-9	
	Cv. Cp., C	1	---- ---	---- ---	2484 762-3	
	2 D. H. T., Cv. Cp. w/Tapping PLATE	1	---- ---	---- ---	---- ---	2493 844-5
	EXTENSION, Body Lock Pillar Upper					
	2 D., P	1	---- ---	---- ---	2527 914-5	
23-36-66	REINFORCEMENT, Body Lock Pillar					
	2 D. H. T., Cv. Cp., P, D, C-L, C-M	1	---- ---	---- ---	2482 114-5	2424 686-7
	2 D.	1	2242 764-5			
	2 D., P Upper	1	---- ---	*2166 230-1	⊟2482 108-9	
	Sta. Wgn. Upper	1	---- ---	---- ---	2483 870-1	

TYPE LETTERS Indicate: V - Valiant, L - Dart, R - Belvedere, W - Coronet, P - Plymouth, D - Dodge, C - Chrysler, Y - Imperial

★Indicates use as required.
⊟Indicates parts not listed in any previous parts book.
Right and left part numbers are on same line, first number is right, second number is left.
* Indicates change or addition.

Printed in U.S.A.
Prices and specifications subject to change without notice.
March 1966 Supersedes May 1965.

MyMopar.com

CODE	PART NAME AND DESCRIPTION	PER CAR	VALIANT / DART	PLYMOUTH BELVEDERE / DODGE CORONET	PLYMOUTH FURY / DODGE POLARA / CHRYSLER	IMPERIAL
23-36-0	**PILLARS - Cont'd**					
23-36-66	REINFORCEMENT - Cont'd.					
	2 D., 2 D. H. T., Cv. Cp. w/Tapping PLATE, Lower	1	---- ---	2493 032-3		
	REINFORCEMENT, Rear Body Lock Pillar to Wheelhouse					
	Sta. Wgn.	1	---- ---	---- ---	⊟2482 624-5	
	REINFORCEMENT, Quarter Outside Panel Lock Pillar to Outer Sill					
	V Barracuda	1	2423 810-11			
	Cv. Cp., V	1	2423 810-11			
	2 D. H. T., Cv. Cp., L	1	2423 810-11			
	REINFORCEMENT, Front Pillar to Cowl Side Panel					
	All	1	---- ---	---- ---	---- ---	2218 802-3
	SUPPORT and NUTS Side Panel Reinforcement					
	All	1	---- ---	---- ---	---- ---	2491 736-7
	REINFORCEMENT, Center Inner Pillar and Safety Seat Belt					
	4 D. H. T.	1	---- ---	---- ---	---- ---	2493 322-3
23-36-118	PILLAR, Body Rear					
	Sta. Wgn. Upper	1	2425 174-5	2493 030-1		
	Lower	1	---- ---	2253 210-11		
	Sta. Wgn. Upper, Inner	1	---- ---	---- ---	2484 036-7	
	Upper, Outer	1	---- ---	---- ---	2481 676-7	
	Sta. Wgn., P, C w/Tapping PLATE, Lower	1	---- ---	---- ---	2576 104-5	
	Sta. Wgn., D w/Tapping PLATE, Lower	1	---- ---	---- ---	2576 106-7	
23-36-120	PILLAR, Rear Quarter					
	Cv. Cp.	1	---- ---	2255 720-1		
	Cv. Cp., D	1	---- ---	---- ---	2528 872-3	
	Cv. Cp., P	1	---- ---	---- ---	2528 870-1	
	Cv. Cp., C	1	---- ---	---- ---	2528 874-5	2424 680-1
23-36-123	HANDLE, Roof Panel Outside Assist					
	Sta. Wgn.	1	---- ---	2482 768-9	2588 722-3	
	NUT and WASHER	4	---- ---	6023 204		
	SCREW	6	---- ---	---- ---	⊟6026 103	
	NUT	6	---- ---	---- ---	⊟6026 091	
23-36-125	REINFORCEMENT, Rear Lower Pillar to Wheelhouse					
	Sta. Wgn.	1	---- ---	2251 588-9		
	Sta. Wgn. Flange to Wheelhouse	1	---- ---	---- ---	2484 280-1	
	Sta. Wgn. Pillar to Roof Rail	1	---- ---	---- ---	2526 848-9	
	Sta. Wgn. Lower Corner	1	---- ---	---- ---	2252 300-1	
	Sta. Wgn. To Quarter Inside Panel	1	2242 768-9			
	REINFORCEMENT, Rear Quarter Pillar					
	Cv. Cp.	1	---- ---	---- ---	2602 442-3	
	SUPPORT, Rear Lower Pillar to Wheelhouse					
	Sta. Wgn. Front	1	---- ---	---- ---	2484 276-7	
	Sta. Wgn. Rear	1	---- ---	---- ---	2484 278-9	
	Sta. Wgn. To Roof Rail	1	---- ---	---- ---	2484 282-3	
23-36-130	PLATE, Rear Pillar to Quarter Panel at Belt					
	Sta. Wgn.	1	2243 258-9			

TYPE LETTERS Indicate: V - Valiant, L - Dart, R - Belvedere, W - Coronet, P - Plymouth, D - Dodge, C - Chrysler, Y - Imperial

★Indicates use as required.
⊟Indicates parts not listed in any previous parts book.

Printed in U.S.A.
Prices and specifications subject to change without notice.

Right and left part numbers are on same line, first number is right, second number is left.
• Indicates change or addition.

MyMopar.com

CODE	PART NAME AND DESCRIPTION	PER CAR	VALIANT / DART	PLYMOUTH BELVEDERE / DODGE CORONET	PLYMOUTH FURY / DODGE POLARA / CHRYSLER	IMPERIAL
23-36-0	**PILLARS - Cont'd**					
23-36-134	DEFLECTOR, Roof Panel Outside Air					
	Sta. Wgn.	1	2484 444-5	2252 254-5		
	SCREW	2	6024 814	167 079		
	SCREW	4	6024 815	9418 381		
	SEAL	4	6025 285			
	SPRING PIN	4	9421 238			
23-36-138	SEAL, Roof Panel Outside Assist Handle					
	Sta. Wgn. Upper	1	---- ---	2482 848-9		
	Lower	1	---- ---	2480 980-1		
23-36-141	BASE, Rear Upper Pillar Air Deflector					
	Sta. Wgn. Upper	1	2484 752-3			
	Lower	1	2484 754-5			
23-36-142	GASKET, Rear Upper Pillar Air Deflector Base					
	Sta. Wgn. Upper	2	2529 118			
	Lower	2	2529 118			
23-38-0	**FLOOR TUNNEL CONSOLE**					
23-38-1	CONSOLE, Floor Tunnel					
	2 D. H. T., Cv. Cp., R-P, W-P, P-P, D-L	1	---- ---	2572 588	2572 588	
	2 D. H. T., D-P	1	---- ---	---- ---	2572 588	
	2 D. H. T., Cv. Cp., 4 D. H. T., C-M, C-P, C-H	1	---- ---	---- ---	2572 564	
	2 D. H. T., Cv. Cp. Dark Blue	1	4474 AB8			
	Yellow Tan	1	4474 AT8			
	Dark Red	1	4474 AR7			
	Black	1	4474 AX9			
	Yellow Gold	1	4474 AY3			
	Medium Red	1	4474 AR6			
23-38-2	EXTENSION, Console Rear					
	2 D. H. T., D-P Dark Blue	1	---- ---	---- ---	4435 AB8	
	Turquoise	1	---- ---	---- ---	4435 AQ8	
	Red	1	---- ---	---- ---	4435 AR5	
	Yellow Tan	1	---- ---	---- ---	4435 AT9	
	Red Tan	1	---- ---	---- ---	4435 AU8	
	Black	1	---- ---	---- ---	4435 AX9	
23-38-3	COVER, Floor Tunnel Console Complete					
	2 D. H. T., Cv. Cp., V-P, L-P, Barracuda	1	2581 207			
23-38-5	PLATE, Floor Tunnel Console Finish					
	2 D. H. T., Cv. Cp., R-P, W-P, P-P Rear	1	---- ---	2581 336	2581 336	
	2 D. H. T., D-P Rear	1	---- ---	---- ---	2581 336	
	2 D. H. T., Cv. Cp., 4 D. H. T., C-P, C-M, C-H Rear	1	---- ---	---- ---	2572 562	
	2 D. H. T., Cv. Cp., P-P, Auto. Trans., Wood Grained	1	---- ---	---- ---	2581 201	
	2 D. H. T., Cv. Cp., R-P, W-P, D-P w/Auto. Trans.	1	---- ---	2490 625	2490 625	
	2 D. H. T., Cv. Cp., R-P, W-P, D-P Manual Trans. Floor Mounted	1	---- ---	2490 626	2490 626	
	2 D. H. T., Cv. Cp., R-P, W-P, P-P, D-P Column Mounting Trans.	1	---- ---	2490 646	2490 646	

TYPE LETTERS Indicate: V - Valiant, L - Dart, R - Belvedere, W - Coronet, P - Plymouth, D - Dodge, C - Chrysler, Y - Imperial

★Indicates use as required.
⊟Indicates parts not listed in any previous parts book.
Right and left part numbers are on same line, first number is right, second number is left.
* Indicates change or addition.

Printed in U.S.A.
Prices and specifications subject to change without notice.
March 1966 Supersedes May 1965.

MyMopar.com

CODE	PART NAME AND DESCRIPTION	PER CAR	VALIANT / DART	PLYMOUTH BELVEDERE / DODGE CORONET	PLYMOUTH FURY / DODGE POLARA / CHRYSLER	IMPERIAL
23-38-0	**FLOOR TUNNEL CONSOLE - Cont'd**					
23-38-5	PLATE - Cont'd.					
	2 D. H. T., Cv. Cp., P-P, C-M, C-P					
	Manual Trans. Floor Mounted, Wood Grained. .	1	---- ---	---- ---	2581 202	
	4 D. H. T., C-M Manual Trans. Floor Mounted, Wood Grained. .	1	---- ---	---- ---	2581 202	
	2 D. H. T., 4 D. H. T., C-H Auto. Trans.	1	---- ---	---- ---	2572 580	
	2 D. H. T., Cv. Cp., C-M, C-P Auto. Trans.	1	---- ---	---- ---	2572 547	
	4 D. H. T., C-M Auto. Trans.	1	---- ---	---- ---	2572 547	
	2 D. H. T., C-L Auto. Trans.	1	---- ---	---- ---	2572 547	
	2 D. H. T., Cv. Cp., 4 D. H. T., C					
	Medium Blue	1	---- ---	---- ---	4432 AB4	
	Dark Blue	1	---- ---	---- ---	4432 AB8	
	Red	1	---- ---	---- ---	4432 AR7	
	Yellow Tan	1	---- ---	---- ---	4432 AT6	
	White	1	---- ---	---- ---	4432 AW3	
	Black	1	---- ---	---- ---	4432 AX9	
	Yellow Gold	1	---- ---	---- ---	4432 AY3	
23-38-7	CAP, Floor Console Rear					
	2 D. H. T., Cv. Cp., R-P, W-P, P-P, D-L	1	---- ---	2490 602	2490 602	
	Medium Blue	1	---- ---	4405 AB4	4405 AB4	
	Dark Blue	1	---- ---	4405 AB8	4405 AB8	
	Medium Blue Turquoise . .	1	---- ---	4405 AQ4	4405 AQ4	
	Dark Blue Turquoise . .	1	---- ---	4405 AQ8	4405 AQ8	
	Medium Blue Red	1	---- ---	4405 AR6	4405 AR6	
	Dark Blue Red	1	---- ---	4405 AR7	4405 AR7	
	Yellow Tan	1	---- ---	4405 AT6	4405 AT6	
	Black	1	---- ---	4405 AX9	4405 AX9	
	Yellow Gold	1	---- ---	4405 AY3	4405 AY3	
	White	1	---- ---	4405 AW3	4405 AW3	
	2 D. H. T., Cv. Cp., 4 D. H. T., C					
	Medium Blue	1	---- ---	---- ---	4432 AB4	
	Dark Blue	1	---- ---	---- ---	4432 AB8	
	Red	1	---- ---	---- ---	4432 AR7	
	Yellow Tan	1	---- ---	---- ---	4432 AT6	
	White	1	---- ---	---- ---	4432 AW3	
	Black	1	---- ---	---- ---	4432 AX9	
	Yellow Gold	1	---- ---	---- ---	4432 AY3	
23-38-14	HINGE, Floor Tunnel Console Compartment					
	All	1	---- ---	2490 649	2490 649	
	SCREW	3	---- ---	⊟6026 186	⊟6026 186	
23-38-15	CATCH, Floor Tunnel Console Compartment Lid					
	All	1	---- ---	2490 608	2490 608	
23-38-17	PLATE, Console Left Hand Side Access Hole					
	All	1	---- ---	2490 639	2490 639	
23-38-18	MOULDING, Floor Carpet Heel Pad					
	All, C	14	---- ---	---- ---	2499 352	
23-38-26	RETAINER, Floor Carpet Heel Pad Moulding					
	All, C	14	---- ---	---- ---	2499 353	

TYPE LETTERS Indicate: V - Valiant, L - Dart, R - Belvedere, W - Coronet, P - Plymouth, D - Dodge, C - Chrysler, Y - Imperial

★Indicates use as required.
⊟Indicates parts not listed in any previous parts book.
March 1966 Supersedes May 1965.

Printed in U.S.A.
Prices and specifications subject to change without notice.
Right and left part numbers are on same line, first number is right, second number is left.
• Indicates change or addition.

MyMopar.com

CODE	PART NAME AND DESCRIPTION	PER CAR	VALIANT / DART	PLYMOUTH BELVEDERE / DODGE CORONET	PLYMOUTH FURY / DODGE POLARA / CHRYSLER	IMPERIAL
23-38-0	**FLOOR TUNNEL CONSOLE - Cont'd**					
23-38-27	BRACKET, Console Base to Floor Pan					
	2 D. H. T., Cv. Cp. and Barracuda					
	Auto. Trans., Front	1	2573 697			
	Center	1	2573 698			
	Rear	1	2573 696			
	2 D. H. T., Cv. Cp. Front	1	---- ---	2490 628		
	Rear	1	---- ---	2572 895		
	All Front	1	---- ---	---- ---	2572 526	
	Center	1	---- ---	---- ---	2572 525	
	Rear	1	---- ---	---- ---	2572 551	
	BRACKET, Console to Floor					
	2 D. H. T., D-P	1	---- ---	---- ---	2572 518	
	BRACKET, Base Console to Floor Pan Cover Floor Mounted Trans.					
	All	1	---- ---	---- ---	2572 527	
23-38-29	BUMPER, Console Side Moulding to Finish Plate Anti-Rattle					
	All	2	---- ---	1651 493	1651 493	
23-38-30	MEDALLION, Floor Console Tachometer Opening					
	2 D. H. T., Cv. Cp., R-P, W-P, P-P	1	---- ---	2490 631	2490 631	
	2 D. H. T., D-P	1	---- ---	---- ---	2490 631	
	2 D. H. T., Cv. Cp., C-P Lid	1	---- ---	---- ---	2581 243	
23-38-31	RETAINER, Floor Console Tachometer Opening Medallion					
	2 D. H. T., Cv. Cp., R-P, W-P, P-P	1	---- ---	2490 627	2490 627	
	2 D. H. T., D-P	1	---- ---	---- ---	2490 627	
23-38-32	LENS, Floor Console Tachometer Opening Medallion					
	2 D. H. T., Cv. Cp., R-P, W-P, P-P	1	---- ---	2490 622	2490 622	
	2 D. H. T., D-P	1	---- ---	2490 622		
23-38-36	SPRING, Console Compartment Lid Positioning					
	2 D. H. T., Cv. Cp., 4 D. H. T.	1	---- ---	2499 346	2499 346	
23-38-40	WASHER, Floor Console to Console Floor Bracket Attaching					
	2 D. H. T., Cv. Cp., 4 D. H. T.	2	---- ---	2572 931	2572 931	
23-39-0	**WINDOW LIFT (MANUAL)**					
23-39-2	SPRING, Door Window Regulator Assist					
	4D., Sta. Wgn. Front	2	2299 755	2166 851	2520 490	
	4D. HT. Front	2	---- ---	---- ---	2520 490	
	2D., 2D. HT., Cv. Cp. Front	2	2299 819	2216 173	2486 851	
	4D., Sta. Wgn. Rear	2	2299 693	2166 851	2520 557	
	4D. H. T. Rear	2	---- ---	---- ---	2520 556	
23-39-5	REGULATOR or PLATE w/LINK, Door Window					
	4D., Sta. Wgn. Front	1	2242 854-5	2428 016-7	2486 772-3	
	4D. HT. Front	1	---- ---	---- ---	2486 772-3	
	2D. Front	1	2299 820-1	2428 014-5	2486 852-3	
	2D. HT., Cv. Cp. Front	1	2299 560-1	2428 014-5	2486 852-3	
	4D., Sta. Wgn., 4D. H. T. Rear	1	*2242 866-7	*2299 564-5	*2486 776-7	
	SCREW, w/WASHER	★	6024 813	6024 813	6024 648	
	U-NUT	6	6023 946			
23-39-11	STUD, Window Regulator Pivot Arm	★	6000 211	6000 211		

TYPE LETTERS Indicate: V - Valiant, L - Dart, R - Belvedere, W - Coronet, P - Plymouth, D - Dodge, C - Chrysler, Y - Imperial

★Indicates use as required.
⊟Indicates parts not listed in any previous parts book.
Right and left part numbers are on same line, first number is right, second number is left.
* Indicates change or addition.

Printed in U.S.A.
Prices and specifications subject to change without notice.
March 1966 Supersedes May 1965.

MyMopar.com

CODE	PART NAME AND DESCRIPTION	PER CAR	VALIANT / DART	PLYMOUTH BELVEDERE / DODGE CORONET	PLYMOUTH FURY / DODGE POLARA / CHRYSLER	IMPERIAL
23-39-0	**WINDOW LIFT (MANUAL) - Cont'd**					
23-39-12	WASHER, Window Regulator Arm to Glass Lower Channel	★	6000 141	6000 141	6000 141	
	WASHER, Window Regulator Connecting Link	★	---- ---	1954 125		
	SPRING NUT	★	6000 305	6000 305	6000 305	
	SPRING WASHER	★	---- ---	1954 125	1954 125	
23-39-15	STOP, Window Regulator Down Position on Regulator					
	Front	2	---- ---	1909 918	1909 918	
	Quarter	2	---- ---	1909 918	1909 918	
	Rear	2	---- ---	1909 918	1909 918	
	NUT	★	---- ---	6023 096	6023 096	
	SCREW, w/WASHER	★	---- ---	6024 813	6024 813	
23-39-17	BUSHING, Window Regulator to Glass					
	2D. HT., Cv. Cp. Front	2	2299 809			
	2D. Quarter	2	2299 809			
23-39-18	LINK, w/Mounting PLATE, Window Regulator Arm					
	Front	1	---- ---	2216 152-3		
	ARM, w/Mounting PLATE					
	Quarter	1	---- ---	2486 222-3		
23-39-19	BRACKET, Window Regulator Arm Pivot					
	4 D., Sta. Wgn., 4 D. H. T.					
	Rear	2	---- ---	2588 226	2588 227	
23-39-29	REGULATOR, Front Door Vent Wing	1	---- ---	---- ---	2486 802-3	
23-39-34	REGULATOR, Quarter Window					
	2D., V	1	2242 762-3			
	2D., L	1	2299 844-5	2299 974-5	2520 524-5	
	2 D. H. T., V except Barracuda	1	*2299 570-1			
	Barracuda	1	2520 418-9			
	2D. HT., L	1	2299 572-3			
	2D. HT., except C-H	1	---- ---	2428 470-1	2486 778-9	
	2D. HT., C-H	1	---- ---	---- ---	2486 998-9	
	Cv. Cp.	1	2428 208-9	2299 974-5	2486 774-5	
	SCREW, w/WASHER	★	6024 813	6024 813	6024 648	
	U-NUT	2	6023 204			
	NUT, w/WASHER	6	6023 946			
23-39-44	SPRING, Quarter Window Regulator Assist					
	2D.	2	2299 901	2216 172	2520 534	
	2D. HT., V except Barracuda	2	2299 843			
	Barracuda	2	2520 537			
	2D. HT., L	2	2299 901	2299 693	2299 755	
	Cv. Cp.	2	2299 901	2216 172	2520 534	
	Cv. Cp., P, D Counterbalance	2	---- ---	---- ---	2520 535	
	2D. HT., C-H Counterbalance	2	---- ---	---- ---	2520 535	
23-39-45	ROLLER, Window Regulator Arm					
	To Pivot Bracket	★	1697 607	1697 607	1697 607	
	To Glass Frame	★	---- ---	---- ---	2486 982	
23-39-48	BRACKET, Quarter Window Regulator Arm Pivot					
	V Barracuda	2	2602 112			
	2D.	2	---- ---	2602 111	2602 114	
	2D. H.T.	2	---- ---	2602 113	2602 114	2588 270
	Cv. Cp.	2	---- ---	2602 111	2602 115	2588 270
23-39-53	CLIP, Front Door Window Regulator to Glass Pin					
	2D. HT., Cv. Cp.	2	2243 390			
	CLIP, Quarter Window Regulator Front Pivot Arm Pin					
	2D.	2	2243 390			

TYPE LETTERS Indicate: V - Valiant, L - Dart, R - Belvedere, W - Coronet, P - Plymouth, D - Dodge, C - Chrysler, Y - Imperial

★Indicates use as required.
⊟Indicates parts not listed in any previous parts book.

Printed in U.S.A.
Prices and specifications subject to change without notice.
Right and left part numbers are on same line, first number is right, second number is left.
* Indicates change or addition.

March 1966 Supersedes May 1965.

MyMopar.com

CODE	PART NAME AND DESCRIPTION	PER CAR	VALIANT / DART	PLYMOUTH BELVEDERE / DODGE CORONET	PLYMOUTH FURY / DODGE POLARA / CHRYSLER	IMPERIAL
23-40-0	**ROOF RAIL AND LUGGAGE RACK**					
23-40-82	SUPPORT, Rear Window Frame to Headlining Bow					
	V except Barracuda	2	2082 226			
	V Barracuda	2	2581 074			
	L except Sta. Wgn.	2	2490 591			
	L Sta. Wgn.	2	2082 226			
	2D., 4D., 2D. HT.	2	---- ---	2490 579		
	2 D. H.T., C-H	2	---- ---	---- ---	2581 780	
	2D. HT., except C-H	2	---- ---	---- ---	2581 324	
	2D., 4D., 4D. HT., P Center	1	---- ---	---- ---	2581 322	
	2D., 4D., 4D. HT., P Side	2	---- ---	---- ---	2581 323	
	2 D. H. T., 4 D. H. T.	2	---- ---	---- ---	---- ---	2490 568
	4 D., D, C	2	---- ---	---- ---	2581 832	
	4 D. H.T., D, C	1	---- ---	---- ---	2581 780	
23-40-85	RAIL, Roof Side except Barracuda	1	2242 520-1			
	V Barracuda Outer	1	2484 566-7	2424 522-3		
	Sta. Wgn. Outer	1	2244 652-3	2481 596-7		
	4D. HT., W Outer	1	---- ---	2481 596-7		
	2D. HT., except C-H, Outer	1	---- ---	---- ---	2482 324-5	
	2D. HT., C-H Outer	1	---- ---	---- ---	2481 456-7	
	4D. HT., P Outer	1	---- ---	---- ---	2481 464-5	
	4D. HT., except P, Outer	1	---- ---	---- ---	2481 456-7	
	4D., D, C Outer	1	---- ---	---- ---	2482 328-9	
	Outer	1	---- ---	---- ---	---- ---	2422 326-7
	V Barracuda Inner	1	2484 564-5			
	Except 2D. HT. Inner	1	---- ---	2166 298-9		
	2D. HT. Inner	1	---- ---	2424 518-9		
	2D., 4D., 4D. HT., P Inner	1	---- ---	---- ---	2481 462-3	
	4D., D, C Inner	1	---- ---	---- ---	2482 332-3	
	4 D. H. T., D, C Inner	1	---- ---	---- ---	2481 454-5	
	2D. HT., C-H Inner	1	---- ---	---- ---	2481 454-5	
	Inner	1	---- ---	---- ---	---- ---	2492 894-5
	Sta. Wgn. Front Outer	1	---- ---	---- ---	2481 630-1	
	2D. H.T, except C-H Front Inner	1	---- ---	---- ---	2482 330-1	
	Sta. Wgn. Front Inner	1	---- ---	---- ---	2481 634-5	
	Sta. Wgn. Rear Outer	1	2242 782-3	2166 302-3		
	Sta. Wgn. Rear Inner	1	2242 784-5	2166 304-5	2481 640-1	
	RAIL, Roof Rear					
	Sta. Wgn. Outer	1	2242 781	2166 306	2481 638-9	
	Sta. Wgn. Inner	1	2242 790	2166 308		
	Sta. Wgn. Corner	1	---- ---	2251 584-5		
	Sta. Wgn. Outer Corner	1	2242 786-7	---- ---	2483 996-7	
	Sta. Wgn. Inner Corner	1	2242 788-9	---- ---	2482 628-9	
23-40-86	REINFORCEMENT, Roof Side Outer Rail to Roof Side Outer Rail Extension					
	Sta. Wgn.	1	---- ---	2252 298-9		
23-40-92	EXTENSION, Roof Side Rail					
	Sta. Wgn.	1	2243 256-7			
	Barracuda	1	2576 174-5			
	2D., 2D. HT., 4D., L	1	2481 040-1			
	2D. HT Outer	1	2243 842-3	2424 504-5		
	Sta. Wgn. Outer	1	---- ---	2251 572-3		
	4 D., D, C Outer	1	---- ---	---- ---	2482 286-7	
	4 D. H. T., D, C Outer	1	---- ---	---- ---	2481 478-9	
	4D. HT., P Outer	1	---- ---	---- ---	2483 288-9	
	2D. HT., except C-H, Outer	1	---- ---	---- ---	2482 282-3	
	2D. HT., C-H Outer	1	---- ---	---- ---	2481 478-9	

TYPE LETTERS Indicate: V - Valiant, L - Dart, R - Belvedere, W - Coronet, P - Plymouth, D - Dodge, C - Chrysler, Y - Imperial

★Indicates use as required.
⊟Indicates parts not listed in any previous parts book.
Right and left part numbers are on same line, first number is right, second number is left.

MyMopar.com

Prices and specifications subject to change without notice.

Printed in U.S.A.
March 1966 Supersedes May 1965.

23-40-0 ROOF RAIL AND LUGGAGE RACK - Cont'd

CODE	PART NAME AND DESCRIPTION	PER CAR	VALIANT / DART	PLYMOUTH BELVEDERE / DODGE CORONET	PLYMOUTH FURY / DODGE POLARA / CHRYSLER	IMPERIAL
23-40-92	EXTENSION - Cont'd					
	Barracuda Inner	1	2484 568-9			
	2D., 4D. Inner	1	---- ---	2424 512-3		
	2D. HT. Inner	1	---- ---	2424 514-5		
	Sta. Wgn. Inner	1	---- ---	2251 582-3		
	Rear Outer	1	---- ---	---- ---	---- ---	2588 118-9
	Inner Rail to Rear Window Side Frame 4 D., D, C	1	---- ---	---- ---	2482 292-3	
23-40-96	SUPPORT, Wheelhouse to Roof Side Outer Rail Extension					
	Barracuda	1	2484 588-9			
	2D., 4D., 4D. HT., P	1	---- ---	---- ---	2481 492-3	
	2D. HT., P	1	---- ---	---- ---	2482 342-3	
	4D. HT., D	1	---- ---	---- ---	2482 350-1	
	2D. HT., D	1	---- ---	---- ---	2482 348-9	
	2D. HT., C-L, C-M, C-P	1	---- ---	---- ---	2482 358-9	
	2D. HT., C-H	1	---- ---	---- ---	2481 466-7	
	4D. HT., C	1	---- ---	---- ---	2481 466-7	
	SUPPORT, Wheelhouse to Roof Side Rail					
	2D., 4D.	1	---- ---	2573 218-9		
	2D. HT.	1	---- ---	2424 810-1		
	2D. HT., 4D. HT.	1	---- ---	---- ---	---- ---	2573 208-9
23-40-103	BRACKET, Roof Side Rail to Quarter Window Weatherstrip Retainer					
	V Barracuda	1	2528 376-7			
	BRACKET, Roof Side Rail No. 3 Bow Attaching Sta. Wgn.	2	---- ---	2422 274		
	BRACKET, Roof Side Rail No. 4 Bow Attaching Sta. Wgn.	2	---- ---	2484 706		
	BRACKET, Roof Side Rail Attaching					
	Front Bow	2	---- ---	---- ---	---- ---	2422 274
	Rear Bow	2	---- ---	---- ---	---- ---	2422 274
23-40-148	NUT, Roof Luggage Rack or Crossmember Blind Sta. Wgn.	★	2094 869	2094 869	2094 869	
23-40-150	RAIL, Roof Luggage Rack					
	Sta. Wgn. Front	1	2243 472	2243 472	2528 453	
	Side	2	2243 470	2243 470		
	Rear	1	2243 472	2243 472	2528 453	
	P Side	2	---- ---	---- ---	2528 452	
	D, C Side	2	---- ---	---- ---	2528 458	
23-40-155	CROSSMEMBER, Roof Luggage Rack					
	Sta. Wgn. Front	1	2243 476	2243 476		
	Center	3	2243 477	2243 477		
	Rear	1	2243 476	2243 476		
	Sta. Wgn.	6	---- ---	---- ---	2528 455	
23-40-157	SPACER, Roof Luggage Rack Side Rail Lower					
	Sta. Wgn., P	6	---- ---	2527 923	2529 421	
	Sta. Wgn., except P	8	---- ---	---- ---	2529 421	
23-40-170	STANCHION, Roof Luggage Rack Rail					
	Sta. Wgn.	2	2255 354-5	2255 354-5		
	BRACKET, Roof Luggage Rack Rail					
	Sta. Wgn. Front	2	---- ---	---- ---	2528 454	
	Rear	2	---- ---	---- ---	2528 454	
23-40-171	SCREW, Roof Luggage Rack Rear Rail Bracket Thumb					
	Sta. Wgn.	4	---- ---	---- ---	2528 464	

TYPE LETTERS Indicate: V - Valiant, L - Dart, R - Belvedere, W - Coronet, P - Plymouth, D - Dodge, C - Chrysler, Y - Imperial

★Indicates use as required.
⊟Indicates parts not listed in any previous parts book.
March 1966 Supersedes May 1965.

Printed in U.S.A.
Prices and specifications subject to change without notice.
Right and left part numbers are on same line, first number is right, second number is left.
• Indicates change or addition.

MyMopar.com

CODE	PART NAME AND DESCRIPTION	PER CAR	VALIANT / DART	PLYMOUTH BELVEDERE / DODGE CORONET	PLYMOUTH FURY / DODGE POLARA / CHRYSLER	IMPERIAL
23-40-0	**ROOF RAIL AND LUGGAGE RACK - Cont'd**					
23-40-177	CAP, Roof Luggage Rack Side Rail End					
	Sta. Wgn. Rear	1	---- ---	---- ---	2528 450-1	
	Front, Right	1	---- ---	---- ---	2528 451	
	Front, Left	1	---- ---	---- ---	2528 450	
23-40-180	PLATE, Roof Luggage Rack Crossmember End Tapping					
	Sta. Wgn., P	8	---- ---	---- ---	2529 121	
	Sta. Wgn.	12	---- ---	---- ---	2529 121	
	PLATE, Roof Luggage Rack Rail Bracket Tapping					
	Sta. Wgn. Front	2	---- ---	---- ---	2528 465	
	Rear	2	---- ---	---- ---	2528 465	
23-40-187	PAD, Roof Luggage Rack Crossmember					
	Sta. Wgn. Front	1	2094 874	2094 874		
	Center	3	2094 874	2094 874		
	Rear	1	2094 874	2094 874		
	To Stanchion	6	2243 473	2243 473		
	Sta. Wgn.	4	---- ---	---- ---	2528 457	
	PAD, Roof Luggage Rack Side Rail					
	Sta. Wgn., D, C	2	---- ---	---- ---	2529 977	
	Sta. Wgn., P	2	---- ---	---- ---	2529 976	
23-41-0	**WINDOW LIFT (ELECTRIC)**					
23-41-4	REGULATOR, Electric Window					
	4D., 4D. H.T., Sta. Wgn. Front	1	---- ---	2299 678-9	2520 706-7	
	2D. H.T., Cv.Cp. Front	1	---- ---	2299 680-1	2520 706-7	
	All Front, Right	1	---- ---	---- ---	---- ---	2486 693
	Front, Left	1	---- ---	---- ---	---- ---	2486 692
	2D. H.T., except C-H Quarter	1	---- ---	2486 676-7	2520 704-5	2486 688-9
	2 D. H.T., C-H Quarter	1	---- ---	---- ---	2520 860-1	
	Cv. Cp. Quarter	1	---- ---	2428 230-1	2520 860-1	2486 688-9
	4 D. H. T. Rear	1	---- ---	2299 678-9	2520 708-9	2486 692-3
	4D., Sta. Wgn. Rear	2	---- ---	---- ---	*2520 708-9	
	SPRING NUT	★	---- ---	---- ---	6000 305	6000 305
	SCREW, w/WASHER	★	---- ---	---- ---	6024 648	6024 000
	CLIP, Wiring	2	---- ---	---- ---	---- ---	6015 377
23-41-7	SPRING, Electric Window Regulator Assist					
	4D., 4D. HT., Sta. Wgn. Front	2	---- ---	2251 930	2520 490	
	2D.H.T., Cv.Cp., Front	2	---- ---	2251 939	2486 851	2486 312
	4D. HT. Front	2	---- ---	---- ---	---- ---	2216 173
	2D. H.T., except C-H Quarter	2	---- ---	2299 693	2299 755	
	2 D. H.T., C-H Quarter	2	---- ---	---- ---	2520 535	2486 348
	Cv. Cp. Quarter	2	---- ---	2216 172	2520 534	2486 348
	4D., Sta. Wgn. Rear	2	---- ---	2166 851	2520 557	
	4D. HT. Rear	2	---- ---	---- ---	2520 556	2486 312
	SPACER	2	---- ---	---- ---	6024 998	
23-41-8	SUPPORT, Quarter Window Regulator					
	2D. HT., Cv. Cp. Front	1	---- ---	---- ---	---- ---	2480 768-9
	2D. HT., Cv. Cp. Rear	1	---- ---	---- ---	---- ---	2424 726-7
23-41-19	BRACKET, w/SUPPORT, Door Window Regulator Pivot					
	Front	2	---- ---	---- ---	---- ---	2588 270
	Quarter	2	---- ---	---- ---	---- ---	2588 270
	Rear	2	---- ---	---- ---	---- ---	2588 270

TYPE LETTERS indicate: V - Valiant, L - Dart, R - Belvedere, W - Coronet, P - Plymouth, D - Dodge, C - Chrysler, Y - Imperial

★Indicates use as required.
⊟Indicates parts not listed in any previous parts book.
Right and left part numbers are on same line, first number is right, second number is left.
* Indicates change or addition.

Printed in U.S.A.
Prices and specifications subject to change without notice.
March 1966 Supersedes May 1965.

MyMopar.com

CODE	PART NAME AND DESCRIPTION	PER CAR	VALIANT / DART	PLYMOUTH BELVEDERE / DODGE CORONET	PLYMOUTH FURY / DODGE POLARA / CHRYSLER	IMPERIAL
23-41-0	**WINDOW LIFT (ELECTRIC) - Cont'd**					
23-41-25	RETAINER, Front Door Electric Window Lift Wiring Conduit	2	---- ---	2290 048		
23-41-33	MECHANISM, Electric Window Lift Regulator					
	Front	1	---- ---	2252 048-9		
	Rear	1	---- ---	2252 050-1		
	Cv.Cp. Only Quarter	1	---- ---	2252 050-1		
23-41-34	REPAIR PACKAGE, Electric Window Lift Regulator Mechanism					
	2 D. H. T. Quarter	1	---- ---	*2495 249		
	All	1	---- ---	---- ---	⊟2586 603	2495 249
	NOTE: For Other Models see Part Type Code 23-41-270.					
23-41-37	SEAL, Electric Window Regulator Mechanism	2	---- ---	---- ---	---- ---	2583 178
23-41-53	BRACKET, Front Door Electric Window Regulator Motor	2	---- ---	2251 982		
	BRACKET, Door Electric Window Regulator Motor Mounting Front	2	---- ---	2428 225		
	Rear	1	---- ---	2251 954-5		
	STRAP, Electric Window Regulator Motor Mounting	4	---- ---	---- ---	---- ---	2486 587
	SCREW, w/WASHER	4	---- ---	---- ---	---- ---	6024 000
23-41-55	WIRING, Electric Window Lift					
	4D., Sta. Wgn. Use w/o Power Bucket Seats	1	---- ---	*2291 736		
	2D. H.T. Use w/o Power Bucket Seats	1	---- ---	*2496 738		
	Cv.Cp. Use w/o Power Bucket Seats	1	---- ---	*2291 735		
	Use w/o Door Locks . . .	1	---- ---	---- ---	2497 048	2497 008
	Use w/Door Locks	1	---- ---	---- ---	2497 395	2497 010
	Use w/Power Vent and Door Lock and Power Bucket Seats.	1	---- ---	---- ---	2587 861	
	C Use w/Power Vent and Door Lock w/o Power Bucket Seats.	1	---- ---	---- ---	2497 492	
	Use w/Power Vent	1	---- ---	---- ---	2497 392	
	C Quarter	2	---- ---	---- ---	2497 404	
	Rear Door w/o Door Locks	2	---- ---	---- ---	2497 370	
	Rear Door w/Door Locks .	2	---- ---	---- ---	2497 389	
23-41-95	GROMMET, Electric Window Lift Wiring Conduit w/o Power Bucket Seats Front	2	---- ---	---- ---	2257 299	
	w/o Power Bucket Seats Rear	2	---- ---	---- ---	2258 361	
	4D. HT. Rear	2	---- ---	---- ---	---- ---	1753 681
23-41-106	MOTOR, Electric Window Regulator					
	Front.	2	---- ---	2252 001		
	Rear	2	---- ---	2252 001		
	Cv.Cp. Quarter.	2	---- ---	2252 001		

TYPE LETTERS Indicate: V - Valiant, L - Dart, R - Belvedere, W - Coronet, P - Plymouth, D - Dodge, C - Chrysler, Y - Imperial

★Indicates use as required.
⊟Indicates parts not listed in any previous parts book.
May 1965.

Printed in U.S.A.
Prices and specifications subject to change without notice.
Right and left part numbers are on same line, first number is right, second number is left.
* Indicates change or addition.

MyMopar.com

CODE	PART NAME AND DESCRIPTION	PER CAR	VALIANT / DART	PLYMOUTH BELVEDERE / DODGE CORONET	PLYMOUTH FURY / DODGE POLARA / CHRYSLER	IMPERIAL
23-41-0	**WINDOW LIFT (ELECTRIC) - Cont'd**					
23-41-106	MOTOR, w/MECHANISM, Electric Window Lift					
	Front and Rear	2	---- ---	---- ---	*2520 566-7	
	Quarter	2	---- ---	---- ---	*2520 900-1	
	Motor and Mechanism Package, Electric Window Lift					
	Front and Rear	4	---- ---	---- ---	---- ---	*2583 856
	2D. H. T. Quarter	2		*2583 856	---- ---	*2583 856
	Cv. Cp. Quarter	2	---- ---	---- ---	---- ---	*2583 856
	SCREW, w/WASHER	★	---- ---	---- ---	6024 648	6024 273
23-41-113	PAD, Electric Window Regulator Motor Mounting	★	---- ---	2583 610	---- ---	2583 610
23-41-138	COUPLING, Electric Window Regulator Flexible					
	Front	2	---- ---	1778 955		
	Cv.Cp. Quarter	2	---- ---	1778 955		
23-41-167	CONDUIT, Electric Window Lift Wiring					
	Front Right	1	---- ---	2290 047	2497 774	2426 151
	Front Left	1	---- ---	2290 047	2497 774	2426 161
	Rear	2	---- ---	2291 976	---- ---	1972 092
23-41-170	SWITCH, w/BEZEL, Electric Window Lift					
	4 Gang, Left	1	---- ---	2096 089	2580 613	
	Single	3	---- ---	2096 399	2580 614	2427 184
	Dual, Left	2	---- ---	---- ---	---- ---	2427 213
	SWITCH, Front Door Power Vent					
	C Single, Right	1	---- ---	---- ---	2497 583	2427 184
	C Dual, Left	1	---- ---	---- ---	2497 584	2427 213
	SWITCH, Lockout, w/Left Front Door Window Lift and Vent Wing Switch HOUSING					
	Use w/6 Knobs	1	---- ---	---- ---	---- ---	2496 357
	SWITCH, Lockout, w/Left Front Door Window Lift, Door Lock and Vent Wing Switch HOUSING					
	Use w/7 Knobs	1	---- ---	---- ---	---- ---	2496 359
23-41-171	HINGE, Rear Door Electric Window Lift Wiring Conduit to Door	2	---- ---	2291 984		
23-41-174	SPRING, Electric Window Lift Switch and Bezel Retaining	★	---- ---	---- ---	2496 571	2496 571
23-41-175	KNOB, Door, Quarter or Vent Wing Switch	★	---- ---	---- ---	---- ---	2427 292
23-41-176	CONNECTOR, Electric Window Lift Switch Wiring Single, Right Front, Right Rear, Left Rear	★	---- ---	2096 905	2096 905	
	4 Way	★	---- ---	2096 908		
	5 Way	★	---- ---	2096 911		
	CONNECTOR and TERMINAL PACKAGE					
	3 Way	★	---- ---	---- ---	---- ---	2495 234
	5 Way	★	---- ---	---- ---	2584 954	2495 235
	w/Lockout SWITCH, 6 Way	★	---- ---	---- ---	---- ---	2495 236
	w/o Lockout Switch, 6 Way	★	---- ---	---- ---	---- ---	2495 237
23-41-179	BUMPER, Arm Rest Electric Window Lift Switch Doors and Quarter	★	---- ---	---- ---	---- ---	2581 350
23-41-184	RETAINER, Electric Window Lift Switch					
	Single	3	---- ---	1971 478	*2580 616	
	4 Gang	1	---- ---	2427 324	*2580 615	
	HOUSING, Window Lift Switch					
	Rear	1	---- ---	---- ---	---- ---	2427 730-1
	Quarter	1	---- ---	---- ---	---- ---	2427 880-1

TYPE LETTERS Indicate: V - Valiant, L - Dart, R - Belvedere, W - Coronet, P - Plymouth, D - Dodge, C - Chrysler, Y - Imperial

★Indicates use as required.
⊟Indicates parts not listed in any previous parts book.
Right and left part numbers are on same line, first number is right, second number is left.

Printed in U.S.A.
Prices and specifications subject to change without notice.
March 1966 Supersedes May 1965.

MyMopar.com

CODE	PART NAME AND DESCRIPTION	PER CAR	VALIANT / DART	PLYMOUTH BELVEDERE / DODGE CORONET	PLYMOUTH FURY / DODGE POLARA / CHRYSLER	IMPERIAL
23-41-0	**WINDOW LIFT (ELECTRIC) - Cont'd**					
23-41-184	HOUSING, Door Window Lift and Vent Wing Switch Front Right	1	---- ---	---- ---	---- ---	2427 553
	HOUSING, Door Window Lift, Vent Wing and Door Lock Switch Front Right	1	---- ---	---- ---	---- ---	2427 790
23-41-186	CLIP, Window Lift or Power Vent Switch and Connector	★	---- ---	---- ---	2496 571	⊟2580 940
	CLIP, Window Lift or Power Vent Switch Retainer	★	---- ---	---- ---	---- ---	1779 901
23-41-250	ROLLER, Electric Window Regulator Arm To Glass Frame	★	---- ---	---- ---	2486 982	2486 982
	To Pivot Bracket	★	---- ---	---- ---	1697 607	1697 607
23-41-255	BRACKET, w/REINFORCEMENT, Quarter Window Regulator Arm Pivot	1	---- ---	2602 820-1		
23-41-270	HOUSING, w/SHAFT, Electric Window Regulator Mechanism Front	1	---- ---	---- ---	2520 914-5	
	Quarter	1	---- ---	---- ---	2520 914-5	
	Rear	1	---- ---	---- ---	2520 914-5	
	NOTE: For Imperial see Part Type Code 23-41-34.					
23-41-281	BRACKET, Quarter Window Regulator to Body Lock Pillar Reinforcement Mounting	2	---- ---	---- ---	---- ---	2480 382
23-41-286	SEAL, Electric Window Regulator Mechanism Doors	4	---- ---	2252 029		
	2D. H.T. Quarter	2	---- ---	2583 178	---- ---	2583 178
	Cv.Cp. Quarter	2	---- ---	2252 029		
23-42-0	**WINDOW GLASS RUN**					
23-42-13	RUN, Front Door Window Glass on Vent Wing Divisional Channel					
	2D. HT., Cv. Cp.	2	2217 420			
	2D., 4D., Sta. Wgn.	2	2216 645			
	Includes Upper BUMPER	1	---- ---	---- ---	---- ---	2571 010-1
	RUN, Rear Door Window Glass on Divisional Channel					
	4D., Sta. Wgn.	2	2216 645			
23-42-16	RUN, Front Door Window Glass					
	2D.	2	2254 932	2167 620	*2664 276	
	4D., Sta. Wgn.	2	2254 934	2167 622	2491 297	
23-42-23	RUN, Rear Door Window Glass					
	4D., Sta. Wgn.	2	2216 780	2218 134		
	4D., P	2	---- ---	---- ---	2571 446	
	4 D., D, C	2	---- ---	---- ---	2571 447	
	Sta. Wgn.	2	---- ---	---- ---	2571 448	
23-42-32	RETAINER, w/GUIDE, Rear Upper Pillar Tailgate Glass Run Sta. Wgn.	1	---- ---	---- ---	2528 786-7	
	RETAINER, Roof Rear Header Tailgate Glass Run Sta. Wgn.	1	---- ---	---- ---	2527 069	
23-42-38	RUN, Quarter Window Glass 2D.	2	2245 091	2167 196	2528 400	

TYPE LETTERS Indicate: V - Valiant, L - Dart, R - Belvedere, W - Coronet, P - Plymouth, D - Dodge, C - Chrysler, Y - Imperial

★Indicates use as required.
⊟Indicates parts not listed in any previous parts book.
March 1966 Supersedes May 1965.

Printed in U.S.A.
Prices and specifications subject to change without notice.
Right and left part numbers are on same line, first number is right, second number is left.
* Indicates change or addition.

MyMopar.com

CODE	PART NAME AND DESCRIPTION	PER CAR	VALIANT / DART	PLYMOUTH BELVEDERE / DODGE CORONET	PLYMOUTH FURY / DODGE POLARA / CHRYSLER	IMPERIAL
23-42-0	**WINDOW GLASS RUN - Cont'd**					
23-42-38	RUN, Quarter Window Glass Guide Rear Channel					
	2D. HT., L Inner	1	2244 742-3			
	Outer Right	1	2244 743			
	Outer Left	1	2244 742			
23-42-46	RUN, Tailgate Window					
	Sta. Wgn. Upper	1	2423 720	2484 829	2482 496	
	Lower	2	2423 456	2189 353	2574 828	
	RUN, Rear Upper Pillar Tailgate Window Glass					
	Sta. Wgn. Outer	1	---- ---	---- ---	2528 484-5	
	Inner	1	---- ---	---- ---	2528 580-1	
	SCREW	★	6025 231	6025 231	6025 231	
	SEAL, Roof Rear Header Tailgate Glass Run Retainer					
	Sta. Wgn.	1	---- ---	---- ---	2574 994	
23-42-56	RETAINER, Quarter Window Glass Run					
	2D. Rear	1	---- ---	2424 132-3		
	2 D.	1	---- ---	---- ---	2527 048-9	
23-42-59	SUPPORT, Quarter Window Glass Rear Run Retainer					
	2D.	★	---- ---	2216 415	2526 938-9	
	SCREW, w/WASHER	2	---- ---	6024 813	6024 648	
	BRACKET, Quarter Window Glass Run Rear Retainer Adjusting					
	2D.	2	---- ---	---- ---	2526 943	
23-45-0	**FRONT SEAT**					
23-45-29	PLATE, Front Seat Back Hinge Stop					
	2D. H. T., Cv. Cp., except Barracuda	2	*2160 502			
	2D.	2	*2160 502	*2609 357	*2609 357	
23-45-30	BUMPER, Front Seat Back Stop					
	2D. H.T., Cv.Cp., except Barracuda	2	2160 500	2446 018	2446 018	
	2D. w/Heavy Duty Springs	2	---- ---	2577 994	2577 994	
23-45-33	BRACKET, Front Seat Back Outer Hinge Arm Cover Lower					
	2D.	2	2494 146	2494 146	2494 146	
	2 D. H. T., L, P-L, P-M, D-L	2	2494 146	2494 146	2494 146	
	Cv.Cp., P-L, P-M, D-L	2	2494 146	2494 146	2494 146	
23-45-52	HANDLE, Front Reclining Seat Operating					
	4D. H. T.	1	---- ---	---- ---	*2446 629	2446 629
	2D. HT., Cv. Cp.	1	---- ---	---- ---	2577 404	2577 405
23-45-55	SPRING, Front Seat Cushion to Back Retarder, Passenger Side					
	2D. HT., Cv. Cp. w/Bucket Seats	2	2092 242	2092 242	2092 242	
23-45-60	NAME PLATE, Back of Front Seat Back					
	4 D. H. T. "Le Baron"	1	---- ---	---- ---	---- ---	2571 624
23-45-187	PAWL, Front Reclining Seat Release	1	---- ---	---- ---	2577 584	2577 584
	BOLT, Return	1	---- ---	---- ---	6024 366	6024 366
	WASHER, Retaining	1	---- ---	---- ---	6024 439	6024 439
	RING, Retaining	1	---- ---	---- ---	6024 440	6024 440
23-45-188	STOP, Front Reclining Seat Back Forward Tilt	2	---- ---	---- ---	2494 509	2494 509
23-45-190	SPRING, Reclining Seat Back Return	2	---- ---	---- ---	2446 633	2446 633
	SPRING, Reclining Seat Pawl Return	2	---- ---	---- ---	2446 630	2446 630

TYPE LETTERS Indicate: V - Valiant, L - Dart, R - Belvedere, W - Coronet, P - Plymouth, D - Dodge, C - Chrysler, Y - Imperial

★Indicates use as required.
⊟Indicates parts not listed in any previous parts book.
Right and left part numbers are on same line, first number is right, second number is left.
• Indicates change or addition.

Printed in U.S.A.
Prices and specifications subject to change without notice.
March 1966 Supersedes May 1965.

MyMopar.com

CODE	PART NAME AND DESCRIPTION	PER CAR	VALIANT / DART	PLYMOUTH BELVEDERE / DODGE CORONET	PLYMOUTH FURY / DODGE POLARA / CHRYSLER	IMPERIAL
23-45-0	**FRONT SEAT - Cont'd**					
23-45-192	RETAINER, Reclining Seat Back Return Spring	1	---- ---	---- ---	2446 634	2446 634
	CLIP	1	---- ---	---- ---	2577 349	2577 349
23-45-195	SPACER, Reclining Seat Back to Cushion Mounting	1	---- ---	---- ---	2446 066	2446 066
23-45-197	BRACKET, Reclining Seat Return Spring Adjuster	1	---- ---	---- ---	2446 636	2446 636
23-47 0	**FRONT SEAT ADJUSTER**					
23-47-6	ADJUSTER, Manual Seat					
	w/o Bucket Seats	1	2583 204-5			
	w/Bucket Seats, Passenger's Side, Outer . . .	1	⊟2428 094	*2486 880	*2428 100	
	Inner	1	2428 096	2486 878	2486 840	
	Driver's Side Outer	1	2486 883	2486 881	2428 101	
	Inner	1	2486 877	2486 879	2486 841	
	ADJUSTER, Front Seat Electric					
	Passenger's Side w/Bucket Seats	1	---- ---	---- ---	2583 406	2520 154
	Driver's Side w/Bucket Seats	1	---- ---	---- ---	2583 407	2520 155
	TRACK, w/Upper SUPPORT, Manual Seat Adjuster					
	w/o Bucket Seats, Right .	1	---- ---	2189 900	2189 900	2189 900
	Left	1	---- ---	2162 307	2189 901	2520 403
	SUPPORT, Manual Seat Adjuster					
	w/o Bucket Seats, Lower .	1	---- ---	2251 966-7	2251 966-7	2251 966-7
	TRACK, Electric Seat Adjuster					
	w/o Bucket Seats, Right .	1	---- ---	---- ---	2080 828	2080 828
	Left	1	---- ---	---- ---	2080 827	2080 827
23-47-8	COVER, Electric Front Seat Track					
	Passenger's Seat w/Bucket Seats					
	Black, Inner	1	---- ---	---- ---	4398 TX9	4398 TX9
	Black, Outer.	1	---- ---	---- ---	4396 TX9	4396 TX9
	Blue, Inner	1	---- ---	---- ---	4398 AB8	4398 VB6
	Blue, Outer	1	---- ---	---- ---	4396 AB8	4396 VB6
	Copper, Inner, D	1	---- ---	---- ---	4398 AU9	
	Copper, Outer, D	1	---- ---	---- ---	4396 AU9	
	Gold, Inner	1	---- ---	---- ---	4398 AY8	
	Gold, Outer	1	---- ---	---- ---	4396 AY8	
	Gold and Black, Inner . .	1	---- ---	---- ---	---- ---	4398 AL6
	Gold and Black, Outer . .	1	---- ---	---- ---	---- ---	4396 AL6
	Maroon, Inner	1	---- ---	---- ---	---- ---	4398 AM9
	Maroon, Outer	1	---- ---	---- ---	---- ---	4396 AM9
	Red, Inner	1	---- ---	---- ---	4398 VR7	4398 AR5
	Red, Outer.	1	---- ---	---- ---	4396 VR7	4396 AR5
	Tan, Inner, D	1	---- ---	---- ---	4398 AT9	
	Tan, Outer, D	1	---- ---	---- ---	4396 AT9	
	Tan, Inner, C	1	---- ---	---- ---	4398 AT8	
	Tan, Outer, C	1	---- ---	---- ---	4396 AT8	
	Turquoise, Inner, P,D . .	1	---- ---	---- ---	4398 AQ8	
	Turquoise, Outer, P,D. .	1	---- ---	---- ---	4396 AQ8	
	Yellow Green, Inner . . .	1	---- ---	---- ---	---- ---	4398 VF9
	Yellow Green, Outer . . .	1	---- ---	---- ---	---- ---	4396 VF9
	Driver's Seat w/Bucket Seats					
	Black, Inner	1	---- ---	---- ---	4399 TX9	4399 TX9
	Black, Outer.	1	---- ---	---- ---	4397 TX9	4397 TX9
	Blue, Inner	1	---- ---	---- ---	4399 AB8	4399 VB6
	Blue, Outer	1	---- ---	---- ---	4397 AB8	4397 VB6

TYPE LETTERS Indicate: V - Valiant, L - Dart, R - Belvedere, W - Coronet, P - Plymouth, D - Dodge, C - Chrysler, Y - Imperial

★Indicates use as required.
⊟Indicates parts not listed in any previous parts book.
May 1965.

Printed in U.S.A.
Prices and specifications subject to change without notice.
Right and left part numbers are on same line, first number is right, second number is left.
• Indicates change or addition.

MyMopar.com

CODE	PART NAME AND DESCRIPTION	PER CAR	VALIANT / DART	PLYMOUTH BELVEDERE / DODGE CORONET	PLYMOUTH FURY / DODGE POLARA / CHRYSLER	IMPERIAL
23-47-0	**FRONT SEAT ADJUSTER - Cont'd**					
23-47-8	COVER - Cont'd					
	Copper, Inner, D	1	---- ---	---- ---	4399 AU9	
	Copper, Outer, D	1	---- ---	---- ---	4397 AU9	
	Gold, Inner, P	1	---- ---	---- ---	4399 AY8	
	Gold, Outer, P	1	---- ---	---- ---	4397 AY8	
	Gold and Black, Inner	1	---- ---	---- ---	---- ---	4399 AL6
	Gold and Black, Outer	1	---- ---	---- ---	---- ---	4397 AL6
	Maroon, Inner	1	---- ---	---- ---	---- ---	4399 AM9
	Maroon, Outer	1	---- ---	---- ---	---- ---	4397 AM9
	Red, Inner	1	---- ---	---- ---	4399 VR7	4399 AR5
	Red, Outer	1	---- ---	---- ---	4397 VR7	4397 AR5
	Tan, Inner, D	1	---- ---	---- ---	4399 AT9	
	Tan, Outer, D	1	---- ---	---- ---	4397 AT9	
	Tan, Inner, C	1	---- ---	---- ---	4399 AT8	
	Tan, Outer, C	1	---- ---	---- ---	4397 AT8	
	Turquoise, Inner, P, D	1	---- ---	---- ---	4399 AQ8	
	Turquoise, Outer, P, D	1	---- ---	---- ---	4397 AQ8	
	Yellow Tan, Inner	1	---- ---	---- ---	---- ---	4399 VF9
	Yellow Tan, Outer	1	---- ---	---- ---	---- ---	4397 VF9
	w/o Bucket Seats	1	---- ---	---- ---	2708-9 AT8	2708-9 AT8
23-47-9	STUD, Electric Seat Adjuster to Floor w/o Bucket Seats	4	---- ---	---- ---	6008 111	6008 111
	BOLT, w/Washer, Manual Seat Adjuster Support	4	---- ---	*6008 220	*6008 220	
23-47-12	STOP, Electric Seat Adjuster Track Horizontal w/o Bucket Seats	1	---- ---	---- ---	1830 236-7	1830 236-7
23-47-15	SPACER, Seat Adjuster Base to Floor					
	Manual w/o Bucket Seats	4	1839 303			
	Electric w/Bucket Seats	★	---- ---	---- ---	2428 362	2428 362
23-47-16	NUT, Manual Seat Adjuster Support Front	★	2080 951	2080 951	2080 951	2080 951
23-47-22	ROLLER, Seat Adjuster Track Guide w/Bucket Seats	4	---- ---	---- ---	1520 675	1520 675
23-47-26	SPRING, Manual Seat Adjuster Tension	★	1902 350	1902 350	1902 350	1902 350
23-47-28	HOOK, Front Seat Guide Wire Tension	★	2494 549	2494 549	2494 549	2494 549
23-47-33	CROSSMEMBER, Front Floor Pan Seat Track					
	Front	1	---- ---	---- ---	2481 393	
	Rear	1	---- ---	---- ---	2481 394	
23-47-35	NUT, w/WASHER, Seat Adjuster to Floor	★	---- ---	---- ---	6024 432	6024 430
23-47-55	KNOB, Manual Seat Adjuster Latch Control	★	2161 291	2161 291	2161 291	2161 291
23-47-66	WIRE, Manual Seat Adjuster Latch Connector					
	w/o Bucket Seats	1	2486 966	2486 968	⊟2520 883	2486 965
	w/Bucket Seats	★	2299 661	2299 661	2299 661	
23-47-67	GUIDE, Manual Seat Adjuster Latch Connector Wire Passenger's Side w/Bucket Seats	1	2486 993	2486 994	2486 994	
23-47-75	SPRING, Manual Seat Adjuster Latching Lever	★	2428 388	2428 388	2428 388	
	SPRING, Manual Seat Adjuster Latch	★	---- ---	1645 615	1645 615	1645 615

TYPE LETTERS Indicate: V - Valiant, L - Dart, R - Belvedere, W - Coronet, P - Plymouth, D - Dodge, C - Chrysler, Y - Imperial

★Indicates use as required.
⊟Indicates parts not listed in any previous parts book.
Right and left part numbers are on same line, first number is right, second number is left.
* Indicates change or addition.

Printed in U.S.A.
Prices and specifications subject to change without notice.
May 1965.

MyMopar.com

CODE	PART NAME AND DESCRIPTION	PER CAR	VALIANT / DART	PLYMOUTH BELVEDERE / DODGE CORONET	PLYMOUTH FURY / DODGE POLARA / CHRYSLER	IMPERIAL
23-47-0	**FRONT SEAT ADJUSTER - Cont'd**					
23-47-196	PIN, Electric Seat Adjuster w/o Bucket Seats Front Lever	2	---- ---	---- ---	6008 050	6008 050
	Rear Lever	2	---- ---	---- ---	6008 216	6008 216
23-47-344	UNIT or MECHANISM, Electric Seat Adjuster w/o Bucket Seats Drive	1	---- ---	---- ---	1819 228	1819 228
	Slave, Right	1	---- ---	---- ---	1819 240	1819 240
	Slave, Left	1	---- ---	---- ---	1819 239	1819 239
	w/Bucket Seats Horizontal	1	---- ---	---- ---	*2520 157	2520 157
	Vertical	1	---- ---	---- ---	*2520 156	2520 156
23-47-350	PIN, Electric Seat Adjuster Drive w/o Bucket Seats					
	Dowel	2	---- ---	---- ---	6008 051	6008 051
	Front Lever	2	---- ---	---- ---	6008 050	6008 050
	Rear Lever	2	---- ---	---- ---	6008 216	6008 216
23-47-353	LEVER, w/SHAFT, Electric Seat Adjuster Drive Unit w/o Bucket Seats	3	---- ---	---- ---	1830 289	1830 289
23-47-375	STUD, Electric Seat Stabilizer to Floor Bracket w/o Bucket Seats	1	---- ---	---- ---	2080 456	2080 456
23-47-383	PIVOT END, Electric Seat Adjuster Stabilizer w/o Bucket Seats	2	---- ---	---- ---	2080 329	2080 329
23-47-384	STRUT, Electric Seat Adjuster Stabilizer Female, w/o Bucket Seats	1	---- ---	---- ---	---- ---	2080 330
	Male, w/o Bucket Seats	2	---- ---	---- ---	2080 331	2080 331
23-47-386	WASHER, Electric Seat Adjuster Stabilizer w/o Bucket Seats	2	---- ---	---- ---	2080 466	2080 466
23-47-387	GUARD, Electric Seat Adjuster Rear Lever w/o Bucket Seats	2	---- ---	---- ---	2080 478	2080 478
23-47-413	SPRING, Electric Seat Adjuster Solenoid w/o Bucket Seats	3	---- ---	---- ---	1819 230	1819 230
	w/Bucket Seats	2	---- ---	---- ---	2520 859	2520 859
23-47-414	COIL PACKAGE, Electric Seat Adjuster Drive Unit Solenoid w/o Bucket Seats	3	---- ---	---- ---	1830 290	1830 290
23-47-420	WIRING, Electric Seat Adjuster w/Bucket Seats	★	---- ---	---- ---	*2426 961	
23-47-423	CIRCUIT BREAKER, w/BRACKET, 30 Amp.	1	---- ---	---- ---	⊟2580 953	
23-47-425	RELAY, Electric Seat Adjuster Motor w/o Bucket Seats	1	---- ---	---- ---	2291 927	2291 927
23-47-427	SCREW, w/WASHER, Electric Seat Adjuster Motor Relay Mounting	2	---- ---	---- ---	6008 110	6008 110
23-47-430	MOTOR, Electric Seat Adjuster w/o Bucket Seats	1	---- ---	---- ---	2448 625	2448 625
	w/Bucket Seats	4	---- ---	---- ---	2428 372	2428 372

TYPE LETTERS indicate: V - Valiant, L - Dart, R - Belvedere, W - Coronet, P - Plymouth, D - Dodge, C - Chrysler, Y - Imperial

★Indicates use as required.
⊟Indicates parts not listed in any previous parts book.

Printed in U.S.A.
Prices and specifications subject to change without notice.
Right and left part numbers are on same line, first number is right, second number is left.
* Indicates change or addition.

MyMopar.com

CODE	PART NAME AND DESCRIPTION	PER CAR	VALIANT / DART	PLYMOUTH BELVEDERE / DODGE CORONET	PLYMOUTH FURY / DODGE POLARA / CHRYSLER	IMPERIAL
23-47-0	**FRONT SEAT ADJUSTER - Cont'd**					
23-47-431	TUBE, Electric Seat Adjuster Drive Unit to Slave Unit Cable, w/o Bucket Seats					
	Front Control, Left, Short	1	---- ---	---- ---	1830 216	1830 216
	Rear Control, Left, Short	1	---- ---	---- ---	1830 217	1830 217
	Horizontal Control, Right, Short	1	---- ---	---- ---	1830 218	1830 218
	w/BRACKETS, Right, Long	1	---- ---	---- ---	2486 296	2486 296
23-47-432	COUPLING, Electric Seat Adjuster Drive Unit to Motor					
	w/Bucket Seats	4	---- ---	---- ---	2428 377	2428 377
	w/o Bucket Seats	1	---- ---	---- ---	1594 834	1594 834
	CABLE, Electric Seat Adjuster Drive to Slave Unit, w/o Bucket Seats					
	Front Control, Long . . .	1	---- ---	---- ---	2520 969	2486 300
	Front Control, Short . . .	1	---- ---	---- ---	1830 345	1830 345
	Rear Control, Long . . .	1	---- ---	---- ---	2520 970	2486 301
	Rear Control, Short . . .	1	---- ---	---- ---	1830 347	1830 347
	Horizontal Control, Long .	1	---- ---	---- ---	2520 968	2486 302
	Horizontal Control, Short .	1	---- ---	---- ---	1830 349	1830 349
23-47-433	GROMMET, Electric Seat Adjuster Transmission w/Bucket Seats	8	---- ---	---- ---	2428 459	2428 459
23-47-446	SWITCH, Electric Seat Adjuster w/Bucket Seats	★	---- ---	---- ---	*2096 177	*2496 134-5
	SWITCH, w/BEZEL, Electric Seat Adjuster w/o Bucket Seats	1	---- ---	---- ---	2427 365	2427 365
23-47-447	CLIP, Electric Seat Adjuster Switch Mounting					
	Cv.Cp., 2D. H.T., D-L	★	---- ---	---- ---	2496 571	
	2D. H.T., C	★	---- ---	---- ---	2496 571	
23-47-451	BEZEL, Switch w/Bucket Seats	2	---- ---	---- ---	---- ---	2496 129
	BEZEL PACKAGE D-L, D-H w/o Bucket Seats	1	---- ---	---- ---	2421 142	
23-47-456	BRACKET, Electric Seat Adjuster Switch Mounting w/Bucket Seats	2	---- ---	---- ---	2440 212	2440 212
23-47-457	KNOB, Electric Seat Adjuster Switch w/o Bucket Seats	1	---- ---	---- ---	2096 022	2096 022
23-48-0	**SECOND AND THIRD SEAT**					
23-48-11	PIN, Rear Seat Back Hinge to Wheelhouse Inner Panel Bracket Barracuda	2	2251 544			
23-48-19	STRIKER, Seat Back Latch Sta. Wgn. Second Seat	1	2422 516-7	2423 560-1		
	STRIKER, Second Seat Back on Wheelhouse Sta. Wgn.	2	---- ---	---- ---	2520 853	
	SCREW, w/WASHER	4	---- ---	---- ---	6025 709	
	STRIKER, Third Seat Back Frame Sta. Wgn.	1	---- ---	2251 678		
	STRIKER, Third Seat Back Release Handle on Sill Sta. Wgn.	1	---- ---	---- ---	2486 846	

TYPE LETTERS Indicate: V - Valiant, L - Dart, R - Belvedere, W - Coronet, P - Plymouth, D - Dodge, C - Chrysler, Y - Imperial

★Indicates use as required.
⊟Indicates parts not listed in any previous parts book.
Right and left part numbers are on same line, first number is right, second number is left.
• Indicates change or addition.

Printed in U.S.A.
Prices and specifications subject to change without notice.
March 1966 Supersedes May 1965.

MyMopar.com

CODE	PART NAME AND DESCRIPTION	PER CAR	VALIANT / DART	PLYMOUTH BELVEDERE / DODGE CORONET	PLYMOUTH FURY / DODGE POLARA / CHRYSLER	IMPERIAL
23-48-0	**SECOND AND THIRD SEAT - Cont'd**					
23-48-19	STRIKER, Rear Seat Back Release Handle on Wheelhouse					
	Barracuda	2	2583 203			
	RETAINER, Second Seat Back-Up Position on Wheelhouse					
	Sta. Wgn. Right	1	2255 617	1961 488		
	Left	1	2422 519	2422 519		
23-48-20	HANDLE, Third Seat Back Release					
	Sta. Wgn.	1	---- ---	2251 325	2486 844	
	CLEVIS PIN	1	---- ---	6023 039		
	HANDLE, Rear Seat Back Release					
	V Barracuda	1	2520 582-3			
23-48-22	SPRING, Third Seat Back Release Handle					
	Sta. Wgn.	1	---- ---	2251 676		
23-48-24	BRACKET, Third Seat Back Release Handle					
	Sta. Wgn.	1	---- ---	2251 433		
23-48-28	SUPPORT, Wheelhouse Inner Panel Rear Seat Back					
	V Barracuda	1	2484 906-7			
23-48-31	BAR, Rear Seat Back Release Handle					
	V Barracuda	1	2520 435			
23-48-32	HOUSING, Rear Seat Back Release Handle Striker					
	Barracuda Black	1	4135-6VX9			
	Blue	1	*4135-6VB8			
	Red	1	4135-6VR6			
	Yellow Gold	1	4135-6VY3			
23-48-34	BEZEL, Wheelhouse Second Seat Back Striker					
	Sta. Wgn.	1	---- ---	---- ---	2529 124-5	
23-48-36	"O" RING, Rear Seat Back Release Handle Latch					
	Barracuda	2	*2229 666			
23-48-43	RETAINER, Second Seat Back Spring					
	Sta. Wgn.	2	2254 575	2254 575		
23-48-55	SNAP RING, Third Seat Back Release Handle Clevis Pin					
	Sta. Wgn.	1	---- ---	*1322 503		
23-48-65	PANEL, Second Seat Back					
	Sta. Wgn.	1	2423 825	2423 180		
	Sta. Wgn., except C-H	1	*2423 825	*2423 180	⊟2493 662	
23-48-76	BOLT, Third Seat Back Hinge					
	Sta. Wgn.	2	---- ---	2484 426		
23-48-88	STRIP, Seat Back Support Panel Skid					
	Sta. Wgn. Third Seat	2	---- ---	---- ---	2526 734	
	Sta. Wgn. Second Seat	2	---- ---	---- ---	2526 949	

TYPE LETTERS Indicate: V - Valiant, L - Dart, R - Belvedere, W - Coronet, P - Plymouth, D - Dodge, C - Chrysler, Y - Imperial

★Indicates use as required.
⊟Indicates parts not listed in any previous parts book.

Printed in U.S.A.
Prices and specifications subject to change without notice.
Right and left part numbers are on same line, first number is right, second number is left.
* Indicates change or addition.

MyMopar.com

CODE	PART NAME AND DESCRIPTION	PER CAR	VALIANT / DART	PLYMOUTH BELVEDERE / DODGE CORONET	PLYMOUTH FURY / DODGE POLARA / CHRYSLER	IMPERIAL
23-48-0	**SECOND AND THIRD SEAT - Cont'd**					
23-48-90	TAPPING PLATE, Seat Back Hinge					
	Second Seat	2	---- ---	2423 174		
	Third Seat	2	---- ---	2423 541	2484 068	
23-48-93	BUMPER, Second Seat Back-Up Position on Wheelhouse					
	Sta. Wgn.	2	1960 719	1960 719	2583 220	
	BUMPER, Second Seat Back Hinge to Floor Pan Bracket					
	Sta. Wgn.	2	---- ---	---- ---	2574 322	
	BUMPER, Third Seat Back Support Upper Frame					
	Sta. Wgn.	2	---- ---	2252 184		
	BUMPER, Third Seat Back Support					
	Sta. Wgn., except C-H	2	---- ---	2255 147	2574 912	
	BUMPER, w/INSERT, Third Seat Back Panel					
	Sta. Wgn., except C-H	2	---- ---	---- ---	2529 943	
	Sta. Wgn., C-H	2	---- ---	---- ---	2529 942	
	Sta. Wgn. Bumper, Third Seat Back					
	BUMPER, Third Seat Back Release Handle, Sta. Wgn.	1	---- ---	---- ---	*2765 393	
23-48-98	HINGE, Rear Seat Back Panel					
	V Barracuda	1	2528 782-3			
	SCREW, w/WASHER	4	6025 391			
	HINGE, Second Seat Back Support Panel					
	Sta. Wgn., except C-H	1	---- ---	---- ---	*2484 868	
23-48-99	SUPPORT, Seat Back Hinge on Wheelhouse					
	Sta. Wgn. Second Seat	1	2255 400-1			
	Sta. Wgn. Third Seat	2	---- ---	2255 627		
	BRACKET, Rear Seat Back to Wheelhouse Inner Panel Hinge					
	V Barracuda	1	2603 436-7			
	BRACKET, w/HINGE, Second Seat Back Hinge to Wheelhouse Inner Panel					
	Sta. Wgn.	1	2527 940-1	2527 944-5		
	BRACKET, w/Weld SCREW, Seat Back Hinge to Floor Pan					
	Sta. Wgn. Second Seat	1	---- ---	---- ---	2526 760-1	
	Third Seat	2	---- ---	---- ---	2526 598	
	REINFORCEMENT, Wheelhouse Inner Panel Second Seat Back Hinge Bracket					
	Sta. Wgn.	2	2573 873			
	REINFORCEMENT, Center Floor Pan Second Seat Back Hinge Bracket					
	Sta. Wgn.	1	---- ---	---- ---	2526 644-5	
	REINFORCEMENT, Wheelhouse Inner Panel Rear Seat Back Hinge Bracket					
	Barracuda	2	2573 873			
23-48-109	LINK, Second Seat Back Hinge					
	Sta. Wgn. Front	2	---- ---	---- ---	2482 508	
	Sta. Wgn. Rear	1	---- ---	---- ---	2482 510-1	
	SCREW, Front Link	2	---- ---	---- ---	6024 973	
	SCREW, Rear Shoulder	2	---- ---	---- ---	6024 972	
	WASHER	4	---- ---	---- ---	6022 185	
23-48-111	BRACKET, Second Seat Back Bumper Mounting					
	Sta. Wgn.	2	---- ---	---- ---	2583 239	
23-48-113	WASHER, Second Seat Back Hinge Link					
	Sta. Wgn.	8	---- ---	---- ---	869 770	

TYPE LETTERS Indicate: V - Valiant, L - Dart, R - Belvedere, W - Coronet, P - Plymouth, D - Dodge, C - Chrysler, Y - Imperial

★Indicates use as required.
⊟Indicates parts not listed in any previous parts book.
Right and left part numbers are on same line, first number is right, second number is left.
* Indicates change or addition.

Printed in U.S.A.
Prices and specifications subject to change without notice.
March 1966 Supersedes May 1965.

MyMopar.com

CODE	PART NAME AND DESCRIPTION	PER CAR	VALIANT / DART	PLYMOUTH BELVEDERE / DODGE CORONET	PLYMOUTH FURY / DODGE POLARA / CHRYSLER	IMPERIAL
23-48-0	**SECOND AND THIRD SEAT - Cont'd**					
23-48-121	HINGE, Third Seat Back					
	Sta. Wgn. to Floor Panel Bracket . .	2	---- ---	---- ---	2482 514	
	Except C-H to Support Panel	1	---- ---	---- ---	2484 080	
	C-H to Support Panel	1	---- ---	---- ---	2484 083	
	SPRING WASHER	2	---- ---	---- ---	6024 223	
23-48-149	WASHER, Third Seat Back Hinge					
	Sta. Wgn.	2	---- ---	2484 985		
23-48-188	PANEL, Third Seat Back					
	Sta. Wgn.	1	---- ---	2493 800		
	PANEL, Third Seat Back Support					
	Sta. Wgn.	1	---- ---	2493 794		
	BACK, Third Seat Partial					
	Sta. Wgn., except C-H	1	---- ---	---- ---	2493 666	
	BACK, Rear Seat					
	V Barracuda	1	2493 975			
	SCREW, w/WASHER	4	---- ---	---- ---	6023 227	
23-48-189	BRACKET, Second Seat Back Panel					
	Sta. Wgn.	2	2251 534	2251 534		
	SUPPORT, Seat Back Panel					
	Sta. Wgn., except C-H					
	Second Seat	1	---- ---	---- ---	2493 663	
	Sta. Wgn., C-H Second Seat	1	---- ---	---- ---	2493 664	
	Sta. Wgn., except C-H					
	Third Seat	1	---- ---	---- ---	2493 882	
23-48-201	LOCK, Second Seat Back					
	Sta. Wgn. Includes HANDLE and KNOB	1	---- ---	---- ---	*2765 086-7	
23-48-202	ROD, Second Seat Back Lock					
	Sta. Wgn. .25" dia.	1	---- ---	---- ---	*2583 240	
	.33" dia.	1	---- ---	---- ---	*2765 089	
23-48-203	SPRING, Second Seat Back Lock Rod					
	Sta. Wgn.	1	---- ---	---- ---	2520 852	
23-48-204	CLIP, Second Seat Back Lock Rod Spring					
	Sta. Wgn.	1	---- ---	---- ---	2520 851	
23-48-205	BEARING, Second Seat Back Lock					
	Sta. Wgn. Plastic	1	---- ---	---- ---	2520 848	
23-48-206	RETAINER, Second Seat Back Lock Rod Bearing					
	Sta. Wgn.	1	---- ---	---- ---	2520 850	
23-49-0	**SEAT BELT COMPONENTS**					
23-49-3	COVER, Front Seat Safety Belt Retractor, w/o Bucket Seats					
	2D., 2D. HT., Cv. Cp.					
	Blue	2	---- ---	---- ---	---- ---	4629 AB4
	Maroon	2	---- ---	---- ---	---- ---	4629 AM9
	Red	2	---- ---	---- ---	---- ---	4629 AR7
	Yellow Green	2	---- ---	---- ---	---- ---	4629 AF9
	4D. HT.					
	Blue	2	---- ---	---- ---	---- ---	4457 AB4
	Gray	2	---- ---	---- ---	---- ---	4457 AA3
	Maroon	2	---- ---	---- ---	---- ---	4457 AM9
	Trim Codes (M5R, H8R)					
	Red	2	---- ---	---- ---	---- ---	4629 AR7

TYPE LETTERS Indicate: V - Valiant, L - Dart, R - Belvedere, W - Coronet, P - Plymouth, D - Dodge, C - Chrysler, Y - Imperial

★Indicates use as required.
⊟Indicates parts not listed in any previous parts book.
March 1966 Supersedes May 1965.

Printed in U.S.A.
Prices and specifications subject to change without notice.
Right and left part numbers are on same line, first number is right, second number is left.
* Indicates change or addition.

MyMopar.com

CODE	PART NAME AND DESCRIPTION	PER CAR	VALIANT / DART	PLYMOUTH BELVEDERE / DODGE CORONET	PLYMOUTH FURY / DODGE POLARA / CHRYSLER	IMPERIAL
23-49-0	**SEAT BELT COMPONENTS - Cont'd**					
23-49-3	COVER - Cont'd					
	Trim Codes (M3R)(M3V)(M7R)(H3R)(H3V)					
	Red	2	---- ---	---- ---	---- ---	4457 AR7
	Yellow Green	2	---- ---	---- ---	---- ---	4457 AF9
23-49-9	REINFORCEMENT, Safety Belt Mounting to Floor Pan Lower					
	2D. HT., Cv.Cp., except C	1	---- ---	---- ---	2528 659	
	RETAINER, Seat Retractable Safety Belt Cover					
	2 D., 2 D. H.T., Cv.Cp.	2	---- ---	---- ---	⊟2583 641	
23-51-0	**ROCKER PANEL AND BELT BAR**					
23-51-5	PANEL, Rocker					
	OUTER					
	Except Cv.Cp., V	1	2242 452-3			
	Except Cv. Cp., except Sta. Wgn., L	1	*2243 556-7			
	Cv. Cp., V	1	2255 836-7			
	Cv. Cp., V Complete	1	2425 402-3			
	Cv.Cp., L	1	2255 838-9			
	Cv. Cp., L Complete	1	2425 404-5			
	Sta. Wgn., L	1	2242 452-3			
	2D., 2D. HT.	1	---- ---	2255 674-5		
	4D., Sta. Wgn.	1	---- ---	2255 676-7		
	Cv. Cp.	1	---- ---	2422 528-9		
	Cv. Cp. Complete	1	---- ---	2425 258-9		
	2D., 2D. HT., Cv.Cp., P	1	---- ---	---- ---	2481 100-1	
	4D., P	1	---- ---	---- ---	2484 320-1	
	4D. HT., P	1	---- ---	---- ---	2481 102-3	
	Cv. Cp., P Complete	1	---- ---	---- ---	2493 730-1	
	Sta. Wgn., P	1	---- ---	---- ---	2484 322-3	
	2D. HT., Cv. Cp., D	1	---- ---	---- ---	2481 104-5	
	4D., D	1	---- ---	---- ---	2484 322-3	
	4D. HT., D	1	---- ---	---- ---	2481 106-7	
	Cv. Cp., D Complete	1	---- ---	---- ---	2493 732-3	
	Sta. Wgn., D	1	---- ---	---- ---	2484 322-3	
	2D. HT., Cv.Cp., C	1	---- ---	---- ---	2481 108-9	2482 900-1
	4D., C	1	---- ---	---- ---	2484 324-5	
	4D. HT., C	1	---- ---	---- ---	2481 110-1	2255 452-3
	Cv. Cp., C Complete	1	---- ---	---- ---	2493 734-5	
	Sta. Wgn., C	1	---- ---	---- ---	2484 622-3	
	INNER					
	Front	1	2529 980-1	2529 982-3		
	V Rear	1	2242 390-1	2480 912-3	2481 416-7	
	Except Sta. Wgn., L, Rear	1	2243 552-3			
	Sta. Wgn., L Rear	1	2242 390-1			
	All	1	---- ---	---- ---	---- ---	*2189 314-5
	PANEL, w/REINFORCEMENT, Rocker Panel Inner Front and Safety Belt	1	---- ---	---- ---	⊟2493 510-1	

TYPE LETTERS Indicate: V - Valiant, L - Dart, R - Belvedere, W - Coronet, P - Plymouth, D - Dodge, C - Chrysler, Y - Imperial

★Indicates use as required.
⊟Indicates parts not listed in any previous parts book.
Right and left part numbers are on same line, first number is right, second number is left.
• Indicates change or addition.

Printed in U.S.A.
Prices and specifications subject to change without notice.
May 1965.

MyMopar.com

CODE	PART NAME AND DESCRIPTION	PER CAR	VALIANT / DART	PLYMOUTH BELVEDERE / DODGE CORONET	PLYMOUTH FURY / DODGE POLARA / CHRYSLER	IMPERIAL
23-51-0	**ROCKER PANEL AND BELT BAR - Cont'd**					
23-51-6	REINFORCEMENT, Rocker Outer Panel					
	Cv. Cp.	1	2425 428-9	2424 030-1		
	4D., 4D. HT., C	1	---- ---	---- ---	2481 548-9	
	Sta. Wgn., C	1	---- ---	---- ---	2484 234-5	
	2D. HT., Cv. Cp., Right	1	---- ---	---- ---	---- ---	1861 418
	Left	1	---- ---	---- ---	---- ---	1878 228
	4D. HT. Right	1	---- ---	---- ---	---- ---	1878 031
	Left	1	---- ---	---- ---	---- ---	1878 227
	At No. 2 and No. 2A Body Hold-Down Bolt					
	2D. HT., Cv. Cp., Right	1	---- ---	---- ---	---- ---	1861 416
	Left	1	---- ---	---- ---	---- ---	1878 226
	At No. 3 and No. 3A Body Hold-Down Bolt					
	Front	1	---- ---	---- ---	---- ---	2483 750-1
	Rear	1	---- ---	---- ---	---- ---	2483 752-3
	REINFORCEMENT, Rocker Panel Outer to Cowl Side Inner					
	Cv. Cp.	1	2255 946-7			
	REINFORCEMENT, Rocker Panel Inner					
	Except Cv. Cp.	1	2242 394-5			
	Cv. Cp.	1	---- ---	2529 984-5		
	REINFORCEMENT, Rocker Panel Inner to Torsion Bar Crossmember	1	---- ---	---- ---	2483 252-3	
23-51-12	TIE PLATE, Rocker Panel to Center Pillar					
	4D. HT.	1	---- ---	---- ---	2481 878-9	
23-51-19	GUSSET, Rocker Outer Panel					
	V Barracuda	1	2423 812-3			
	2D. HT., L	1	2423 812-3			
	Except Cv. Cp. Front	2	---- ---	---- ---	2493 739	
	2D. HT. Center	1	---- ---	---- ---	2481 502-3	
	4D., 4D. HT., Sta. Wgn. Rear	1	---- ---	---- ---	2481 514-5	
23-51-41	BAR, Belt Side					
	Cv. Cp.	1	---- ---	---- ---	---- ---	2424 698-9
	BAR, Belt Center					
	Cv. Cp.	1	---- ---	---- ---	---- ---	2424 697
	BAR, Quarter Panel Belt Side					
	Cv. Cp., P	1	---- ---	---- ---	⊟2528 866-7	
	Cv. Cp., D, C	1	---- ---	---- ---	2528 868-9	
	Cv. Cp. Upper and Lower	1	---- ---	2422 748-9		
	Cv. Cp., V Upper and Lower Rear	1	2480 150-1			
	Cv. Cp., L Upper and Lower Rear	1	2480 152-3			
	Cv. Cp. Upper and Lower Center	1	---- ---	2422 866-7		
	Cv. Cp., V Front	1	2255 954-5			
	Cv. Cp., L Front	1	2423 778-9			
	BAR, Deck Opening Belt Center					
	Cv. Cp.	1	---- ---	---- ---	2482 232	
	Cv. Cp., V Upper	1	2255 862	2243 938		
	Cv. Cp., L Upper	1	2255 863			
	Cv. Cp., V Lower	1	2255 864	2243 942		
	Cv. Cp., L Lower	1	2255 865			
	BAR, Wheelhouse Belt Side					
	Sta. Wgn.	1	---- ---	---- ---	2483 858-9	
23-51-42	RESERVOIR, Folding Top Belt Bar					
	Cv. Cp., V Plastic	1	*2573 178-9			

TYPE LETTERS Indicate: V - Valiant, L - Dart, R - Belvedere, W - Coronet, P - Plymouth, D - Dodge, C - Chrysler, Y - Imperial

★Indicates use as required.
⊟Indicates parts not listed in any previous parts book.
May 1965.

Printed in U.S.A.
Prices and specifications subject to change without notice.
Right and left part numbers are on same line, first number is right, second number is left.
* Indicates change or addition.

MyMopar.com

CODE	PART NAME AND DESCRIPTION	PER CAR	VALIANT / DART	PLYMOUTH BELVEDERE / DODGE CORONET	PLYMOUTH FURY / DODGE POLARA / CHRYSLER	IMPERIAL
23-51-0	**ROCKER PANEL AND BELT BAR - Cont'd**					
23-51-43	CAP, Rocker Panel					
	Front	1	2423 654-5	2254 428-9	2481 500-1	1861 270-1
	4D., 4D. HT., Sta. Wgn., C Rear	1	---- ---	---- ---	2483 220-1	
23-51-45	PLUG, Rocker Panel Cap					
	Front	2	2094 985	2094 985	2094 985	
	Inner Rear Panel	2	---- ---	2094 985	2094 985	
23-51-48	BRACE, Belt Bar to Roof Rail Support					
	Sta. Wgn. Right	1	---- ---	---- ---	2484 292	
	Left	1	---- ---	---- ---	2602 739	
	SUPPORT, Belt Bar to Wheelhouse Panel Cap Cv. Cp.	1	---- ---	---- ---	---- ---	2424 742-3
23-54-0	**TAILGATE**					
23-54-1	LOCK					
	Right	1	2251 466	2251 466	2520 184	
	Left	1	2251 467	2251 467	2520 184	
	SCREW, w/WASHER	6	6023 365	6023 365	6022 998	
23-54-2	OVERLAY, Tailgate Outside Panel D-H Sta. Wgn.	1	---- ---	---- ---	*2605 036	
23-54-3	TAILGATE					
	V Manual	1	2425 411			
	V Electric	1	2425 412			
	L Manual	1	2576 007			
	L Electric	1	2576 008			
	P-L, P-M	1	---- ---	2493 166	2493 464(1)	
	P-L, P-M	1	---- ---	---- ---	2576 814(2)	
	P-H	1	---- ---	---- ---	2493 816(1)	
	P-H	1	---- ---	---- ---	2576 815(2)	
	D	1	---- ---	---- ---	2493 818(1)	
	D	1	---- ---	---- ---	2576 817(2)	
	C	1	---- ---	---- ---	2493 817(1)	
	C	1	---- ---	---- ---	2576 816(2)	
23-54-4	HINGE, Tailgate	1	2242 818-9			
	Body Half, Right	1	---- ---	2251 304	2520 238	
	Body Half, Left	1	---- ---	2251 304	2520 239	
	Tailgate Half, Right	1	---- ---	2251 302	2520 240	
	Tailgate Half, Left	1	---- ---	2251 300	2520 241	
	SCREW, w/WASHER	★	180 175	6025 063		
	SET SCREW	★	---- ---	6022 991	6022 991	
23-54-6	STRIKER, Tailgate Lock					
	Right	1	1774 024	1774 024	2520 684	
	Left	1	1774 025	1774 025	2583 129	
	PLATE, Striker Tapping	2	---- ---	---- ---	2484 016	
	SCREW, w/WASHER	★	6022 147	6022 147	6022 147	
23-54-14	SEAL, Lock Striker	2	---- ---	---- ---	2520 691	
	SEAL, Lock Striker Spacer	★	---- ---	---- ---	2583 536(2)	

NOTE 1: Use with Pull-Up Type Handle.

NOTE 2: Use with Knob or Slide Type Handle.

TYPE LETTERS Indicate: V - Valiant, L - Dart, R - Belvedere, W - Coronet, P - Plymouth, D - Dodge, C - Chrysler, Y - Imperial

★Indicates use as required.
⊟Indicates parts not listed in any previous parts book.
Right and left part numbers are on same line, first number is right, second number is left.
* Indicates change or addition.

MyMopar.com

CODE	PART NAME AND DESCRIPTION	PER CAR	VALIANT / DART	PLYMOUTH BELVEDERE / DODGE CORONET	PLYMOUTH FURY / DODGE POLARA / CHRYSLER	IMPERIAL
23-54-0	**TAILGATE - Cont'd**					
23-54-17	PIN, Hinge					
	Right	1	---- ---	2251 738		
	Left	1	---- ---	2251 737		
	Gate Half	2	---- ---	---- ---	6025 227	
23-54-18	BASE, w/STUD, Electric Window Regulator Outside Panel Ornament	1	---- ---	2428 221		
23-54-19	ARM, Support	1	2243 343			
	ARM, w/GUIDE, Hinge Check	1	---- ---	---- ---	2486 814	
	BOLT	2	6023 363			
	SPRING WASHER	2	6006 217			
	CONED WASHER	2	6022 191			
23-54-27	SHIM, Lock Striker	★	1777 926	1777 926		
	SPACER, Hinge	2	1706 470			
	SPACER, Lock Striker	★	---- ---	---- ---	2583 535	
23-54-28	SEAL, Sill Panel to Rear Bumper	1	---- ---	2252 169		
	SEAL, Sill Panel	1	---- ---	---- ---	2574 025	
23-54-29	CLIP, Sill Panel to Rear Bumper Seal	11	---- ---	2252 170		
23-54-31	SPRING, Lock Detent	2	2299 984	2299 984		
	SPRING, Lock Latch	1	---- ---	---- ---	⊟2520 189	
23-54-50	BUMPER, Inside Panel	1	2423 001			
	Inside Panel Lower	4	---- ---	---- ---	2481 330	
	Opening Sill Panel	4	---- ---	---- ---	*1943 547	
23-54-53	SEAL, Insert Panel to Inner Panel	2	2254 763	2254 763	2254 763	
23-54-59	BRACKET, Glass Channel Down Stop	2	---- ---	2255 067		
23-54-63	PLATE, Opening Sill Scuff	2	---- ---	2162 499		
23-54-67	REPAIR PACKAGE, Manual Window Regulator Handle	1	---- ---	2584 539		
23-54-72	REGULATOR, Window					
	Manual	1	2243 338	2251 270	2486 800	
	Electric	1	2299 761	2428 132	2520 862	
	SCREW, w/WASHER	4	6000 141	6024 813	6024 648	
	SPRING NUT	2	6000 305	---- ---	6000 305	
23-54-73	HANDLE PACKAGE, Manual Window Regulator Outside	1	2299 444			
	HANDLE, Complete	1	---- ---	2428 234	2486 860	
	STUD	3	---- ---	6024 084	6024 084	
23-54-74	SPRING, Window Regulator Counterbalance or Assist	1	2082 989	2251 358	2486 971	
23-54-77	RING, Manual Window Regulator Outside Handle Interlocking	1	2428 071	2428 071	2428 071	
23-54-79	RETAINER, Manual Window Regulator Handle	1	---- ---	1775 164		
23-54-82	SKID STRIP, Tailgate Sill to Tailgate Cover Inner Panel Plastic	2	---- ---	---- ---	*2527 021	
	SKID STRIP, Tailgate Inside Panel	2	---- ---	---- ---	⊟2664 252	

TYPE LETTERS Indicate: V - Valiant, L - Dart, R - Belvedere, W - Coronet, P - Plymouth, D - Dodge, C - Chrysler, Y - Imperial

★Indicates use as required.
⊟Indicates parts not listed in any previous parts book.

Printed in U.S.A.
Prices and specifications subject to change without notice.
Right and left part numbers are on same line, first number is right, second number is left.
* Indicates change or addition.

MyMopar.com

CODE	PART NAME AND DESCRIPTION	PER CAR	VALIANT / DART	PLYMOUTH BELVEDERE / DODGE CORONET	PLYMOUTH FURY / DODGE POLARA / CHRYSLER	IMPERIAL
23-54-0	**TAILGATE - Cont'd**					
23-54-92	GASKET, Window Regulator Outside Handle Base or Ornament					
	Manual	1	2299 715	---- ---	2520 954	
	Electric	1	2486 181			
23-54-98	ROLLER, Window Regulator Arm to Glass	2	---- ---	---- ---	2486 874	
	SPRING NUT	2	---- ---	---- ---	6000 305	
23-54-100	HOUSING, Manual Window Regulator Outside Handle Shaft	1	2299 746	2299 746	2486 751	
23-54-102	SET-SCREW, Manual Tailgate Window Regulator Handle Pivot	2	---- ---	1960 017	1960 017	
23-54-103	BUMPER, Window Glass Stop Down Position					
	Manual	2	2244 581	2255 206	2484 941	
	Electric	2	2244 581	2255 207	2484 941	
23-54-106	SEAL, Hinge Check Arm or Torsion Bar Guide Plate	1	---- ---	---- ---	2520 642	
23-54-107	PLATE, Window Regular Mounting	1	---- ---	2251 710-1		
23-54-108	PANEL, Sill to Cover Inner and Outer	1	---- ---	---- ---	2484 998	
23-54-109	ROD, Inside Handle Lock Actuating	1	2242 827			
23-54-111	STUD, Window Regulator Arm to Glass	2	---- ---	2251 790		
23-54-118	PLUG, Inside Panel	2	1652 067	1882 735		
	PLUG, Drain	1	---- ---	---- ---	2574 190	
23-54-125	SPACER, Manual Window Regulator Outside Handle Shaft Housing	1	2520 938	2520 938	2520 938	
23-54-127	BRACKET, Electric Window Regulator	1	---- ---	2428 075		
	SCREW, w/WASHER	2	---- ---	6024 813		
23-54-128	CLIP, Manual Window Regulator Handle Pawl Spring Retainer	1	1961 318	1961 318	1961 318	
23-54-136	PLATE, Hinge Tapping	1	2243 336	---- ---	2527 820-1	
	PLATE, Hinge Torsion Bar Guide	★	2243 346	2251 269	2520 246	
	PLATE, Hinge Check Arm Guide	1	---- ---	---- ---	2520 247	
23-54-140	BAR, w/GUIDE, Torsion	1	2299 608	2251 795		
	BAR, Hinge Torsion	1	---- ---	---- ---	2520 250	
	BAR, Sill to Cover Torsion	1	---- ---	---- ---	2602 130	
23-54-141	RETAINER, Torsion Bar	2	2242 825			
	RETAINER, Torsion Bar Bearing					
	End	1	---- ---	2251 694		
	Center	1	---- ---	2251 372		
	RETAINER, Hinge Torsion Bar Bearing	1	---- ---	---- ---	2251 372	
	SCREW, w/WASHER	2	6024 813			
23-54-142	BEARING, Torsion Bar	1	---- ---	---- ---	2520 637	
	End	1	---- ---	2251 695		
	Center	1	---- ---	2251 293		

TYPE LETTERS Indicate: V - Valiant, L - Dart, R - Belvedere, W - Coronet, P - Plymouth, D - Dodge, C - Chrysler, Y - Imperial

★Indicates use as required.
⊟Indicates parts not listed in any previous parts book.
Right and left part numbers are on same line, first number is right, second number is left.
• Indicates change or addition.

Printed in U.S.A.
Prices and specifications subject to change without notice.
May 1965.

MyMopar.com

CODE	PART NAME AND DESCRIPTION	PER CAR	VALIANT / DART	PLYMOUTH BELVEDERE / DODGE CORONET	PLYMOUTH FURY / DODGE POLARA / CHRYSLER	IMPERIAL
23-54-0	**TAILGATE - Cont'd**					
23-54-143	BRACKET, Opening Sill Panel Torsion Bar	1	---- ---	---- ---	2484 964	
	SCREW	1	---- ---	---- ---	6022 938	
23-54-144	CLAMP, Torsion Bar	1	2242 810	2299 811		
	Malleable Iron	1	---- ---	---- ---	*2520 275	
	Steel	1	---- ---	---- ---	*2765 318	
23-54-150	COVER, Inside Panel Regulator Access Hole	1	2242 812	2251 312	2482 463	
	SCREW	6	---- ---	---- ---	6024 678	
	SCREW, Sill to Cover Panel	6	---- ---	---- ---	6024 648	
23-54-152	COUPLING, Electric Window Lift Motor to Mechanism	1	1778 955	2486 072	1778 955	
23-54-160	MOTOR, Electric Window Regulator	1	2584 840	2448 640	2448 640	
23-54-165	MECHANISM, Electric Window Regulator	1	2188 735	2486 071	2486 882	
	SCREW	★	---- ---	6023 598	6024 079	
23-54-167	SWITCH, Electric Window Lift					
	On Instrument Panel . . .	1	2496 921	2496 921	2496 921	
	Lock, on Tailgate	1	2196 313	2196 313	2196 313	
	Limit, on Tailgate . . .	1	2291 430	2291 430	2497 546	
23-54-169	KNOB, Window Lift Switch P	1	---- ---	---- ---	2587 502	
23-54-170	BEZEL, Window Lift Switch on Instrument Panel					
	W, P	1	*1972 898	2497 250	2580 099	
	D	1	---- ---	---- ---	2580 156	
	D Mounting	1	---- ---	---- ---	2497 250	
23-54-171	NUT, Window Lift Switch Mounting C	1	1887 603	1887 603	6008 060	
23-54-175	GASKET, Lock Release Handle Base	1	---- ---	---- ---	2520 636(1)	
23-54-178	WIRING, Window Lift					
	Switch	1	2497 172			
	Tailgate	1	2497 254	2291 865		
	CLIP	★	---- ---	6015 377		
23-54-180	HANDLE, Lock Release	1	2251 344	2251 344	2520 631(1)	
	SCREW, Handle Base, Flat Head	2	---- ---	---- ---	6025 588(1)	
	CLIP, Handle Link	1	---- ---	---- ---	6008 145(1)	
23-54-184	ROD, Lock Actuating	1	---- ---	2251 345		
23-54-186	SPRING, Lock Remote Control Link Actuating Lever	1	---- ---	---- ---	2520 183(1)	
23-54-193	BEARING, Lock Actuating Rod	4	2242 800			
		2	---- ---	2251 360		
	SCREW, w/WASHER	2	---- ---	6024 813		

NOTE 1: Use with Pull Up Type Handle.

TYPE LETTERS Indicate: V - Valiant, L - Dart, R - Belvedere, W - Coronet, P - Plymouth, D - Dodge, C - Chrysler, Y - Imperial

★Indicates use as required.
⊟Indicates parts not listed in any previous parts book.
March 1966 Supersedes May 1965.

Printed in U.S.A.
Prices and specifications subject to change without notice.
Right and left part numbers are on same line, first number is right, second number is left.
* Indicates change or addition.

MyMopar.com

CODE	PART NAME AND DESCRIPTION	PER CAR	VALIANT / DART	PLYMOUTH BELVEDERE / DODGE CORONET	PLYMOUTH FURY / DODGE POLARA / CHRYSLER	IMPERIAL
23-54-0	**TAILGATE - Cont'd**					
23-54-194	RETAINER, Lock Actuating Rod and Bearing	2	2243 337	2251 746		
23-54-205	BUMPER, Inside Handle	2	2251 461	2251 461		
23-54-207	RETAINER, Inside Handle	1	---- ---	2251 747		
23-54-208	GROMMET, Window Lift Wiring	1	2291 672			
23-54-209	HINGE, Opening Sill to Tailgate Cover	1	---- ---	---- ---	2484 946	
23-54-210	PIN, Window Lift Limit Switch Actuator	1	---- ---	---- ---	2497 550	
23-54-213	SPACER, Lock Remote Control Handle Knob	1	---- ---	---- ---	⊟2765 399(2)	
23-54-214	KNOB, Lock Remote Control Handle	1	---- ---	---- ---	⊟2583 506(2)	
	SCREW	1	---- ---	---- ---	⊟9423 017	
23-54-216	LEVER or LINK, Lock Remote Control Link Actuating	1	---- ---	---- ---	2486 794	
23-54-218	CONTROL, w/LINKS, Lock Remote	1	---- ---	---- ---	*2486 818(1)	
	CONTROL, Lock Remote Includes Handle	1	---- ---	---- ---	⊟2583 501(2)	
23-54-219	PLUG, Inside Panel Wiring Opening P Manual	1	---- ---	---- ---	*2093 981	
23-54-220	SLEEVE, Lock Remote Control Handle Plastic	1	---- ---	---- ---	⊟2583 510(2)	
23-54-221	BEZEL, Lock Remote Control Handle	1	---- ---	---- ---	⊟2583 508(2)	
23-54-222	BOOT, Remote Control Handle Dust	1	---- ---	---- ---	⊟2583 509	
23-58-0	**FOLDING TOP**					
23-58-3	TOP, Folding, w/o Lift Mechanism and Trim Manual	1	1980 AW2			
	Power	1	1981 AW2	1964 VW2	1978 AW2	1967 VW2
23-58-31	SPRING, Folding Top Counterbalance Manual	2	2424 079			
23-58-35	BRACKET, Counterbalance Spring Anchor Manual	2	2424 078			
23-58-67	BRACKET, Quarter Belt Bar to Rear Bow Tension Cable	2	1954 604	1954 604	2574 843	2424 777
	BRACKET, Top Cover Tension Cable Front	2	---- ---	---- ---	---- ---	2572 191
	BRACKET, w/PIVOT, Tension Cable Attaching	2	---- ---	---- ---	---- ---	2572 889
	PIVOT, Top Cover Side Tension Cable Front Attaching	2	6025 207	6025 207	---- ---	6025 207
	SCREW	2	6025 206	6025 206	---- ---	6025 206
	RETAINER	2	6025 208	6025 208	---- ---	6025 208

NOTE 1: Use with Pull-up Type Handle.

NOTE 2: Use with Knob or Slide Type Handle.

MyMopar.com

CODE	PART NAME AND DESCRIPTION	PER CAR	VALIANT / DART	PLYMOUTH BELVEDERE / DODGE CORONET	PLYMOUTH FURY / DODGE POLARA / CHRYSLER	IMPERIAL
23-58-0	**FOLDING TOP - Cont'd**					
23-58-75	BOW, Folding Top					
	No. 1	1	2422 173	2481 188	2422 173	2424 798
	No. 2	1	2422 174	2481 182	2528 252	2424 831
	No. 3	1	2573 099	2481 237	2528 259	2424 859
	LOCK NUT No. 3 Bow	2	---- ---	---- ---	6023 096	
23-58-76	LINK, Rear Bow	1	2574 690-1	2251 128-9	---- ---	2424 588-9
23-58-78	PLATE, Number One Bow Bracket to Link Adjusting	2	---- ---	---- ---	2602 124	1909 914
	PLATE, Number Two Bow Bracket Adjusting	2	---- ---	---- ---	2602 126	
	PLATE PACKAGE, Number One Bow Bracket Adjusting	1	---- ---	---- ---	⊟2784 433	
23-58-79	SCREW, w/WASHER, Number One Bow Bracket Adjusting Plate	2	---- ---	---- ---	2602 127	
23-58-84	BRACKET, Bow					
	No. 1	2	2255 876			
	No. 3	1	---- ---	---- ---	2528 270-1	
23-58-189	WIRING					
	Switch	1	2497 172			
	Top Lift and Courtesy Lamp	1	---- ---	2580 335		
	Motor	1	---- ---	---- ---	---- ---	2497 178
23-58-200	CYLINDER, w/YOKE, Top Lift Operating	2	2422 142	2483 432	2573 767	2424 995
23-58-208	BRACKET, Operating Cylinder Mounting					
	V	2	2424 092	*2253 024-5	---- ---	2482 819
	L	2	2424 094			
23-58-213	BUSHING, Cylinder Rod Attaching Plastic, Flange dia. 1"	2	---- ---	---- ---	2528 237	
	BUSHING, Cylinder and Yoke Plastic, Flange dia. 13/16"	4	---- ---	---- ---	2573 690	
23-58-215	PLATE, Cylinder Attaching Side Rail	1	---- ---	---- ---	2528 206-7	
23-58-220	HEADER, Complete	1	2424 659	2482 919	2573 663	2480 824
23-58-224	RETAINER, Folding Top to Belt Side					
	W	1	---- ---	2525 878-9		
23-58-227	MECHANISM, Header Locking					
	Right	1	1950 413	1950 413	2520 610	
	Left	1	1950 413	1950 413	2520 611	
	SCREW, Self Locking, lgh.3/4"	4	---- ---	---- ---	6025 281	
	SCREW, Self Locking, lgh.1"	2	---- ---	---- ---	6025 282	
23-58-228	DOWEL, Header	2	1758 839	1758 839	---- ---	6006 235
23-58-229	RETAINER, Header Lower Dowel Lock Nut	2	---- ---	---- ---	---- ---	1691 911
23-58-230	BRACKET or CATCH, Header Lock Includes Visor ARM	1	---- ---	---- ---	2526 622-3	

TYPE LETTERS Indicate: V - Valiant, L - Dart, R - Belvedere, W - Coronet, P - Plymouth, D - Dodge, C - Chrysler, Y - Imperial

★Indicates use as required.
⊟Indicates parts not listed in any previous parts book.
March 1966 Supersedes May 1965.

Printed in U.S.A.
Prices and specifications subject to change without notice.
Right and left part numbers are on same line, first number is right, second number is left.
* Indicates change or addition.

MyMopar.com

CODE	PART NAME AND DESCRIPTION	PER CAR	VALIANT / DART	PLYMOUTH BELVEDERE / DODGE CORONET	PLYMOUTH FURY / DODGE POLARA / CHRYSLER	IMPERIAL
23-58-0	**FOLDING TOP - Cont'd**					
23-58-232	COVER, Header Lock Mechanism Access Hole 6 7/16" long	1	---- ---	---- ---	---- ---	1750 777
	COVER, Header Lock Access Hole 7 3/8" long	1	---- ---	---- ---	---- ---	1750 854-5
23-58-234	CLIP, Header Lock Handle Torsion Bar to Link	1	---- ---	---- ---	---- ---	6006 221
23-58-239	ANTI-RATTLER, Header Dowel	2	2484 635	2484 635	2484 635	
23-58-240	PANEL, Header Outside Finish Moulding Package, Header Finish	1	---- ---	---- ---	---- ---	2196 483
23-58-243	HANDLE, Header Lock	1	---- ---	---- ---	---- ---	1751 156
23-58-245	PIN, Locking Mechanism Handle to Housing	2	6000 321	6000 321		
	PIN, Lock Handle to Link	1	---- ---	---- ---	---- ---	6006 222
23-58-248	RETAINER, Header Lock Handle to Escutcheon Pin	2	---- ---	---- ---	---- ---	1750 724
23-58-250	ARM, w/ANTI-RATTLER and Lock CATCH, Header	1	2424 470-1			
23-58-253	ESCUTCHEON, Header Lock Handle	1	---- ---	---- ---	---- ---	1751 173
23-58-257	LINK, Header Lock Handle to Torsion Bar	1	---- ---	---- ---	---- ---	1750 619
23-58-262	LATCH, Header Lock Mechanism Handle	2	2251 117	2251 117	2251 117	
23-58-265	CATCH, Header Lock	1	---- ---	---- ---	---- ---	1751 264
23-58-266	SPRING, Locking Mechanism	2	1759 368	1759 368		
		1	---- ---	---- ---	---- ---	1751 262
23-58-269	LINKAGE, Side Rail	1	2483 578-9	*2484 958-9	---- ---	2480 388-9
23-58-333	LINK, w/PIN, Power	2	---- ---	2484 888		
	LINK, Power	2	---- ---	---- ---	---- ---	2526 621
	NUT, to Side Rear Rail	2	---- ---	---- ---	---- ---	6024 830
23-58-335	PLATE, Top Control Prop Support Tapping	2	2189 735	2189 735		
	PLATE, Power Guide Link Support Tapping	2	---- ---	2254 714		
23-58-336	SUPPORT, Top Control Prop	2	1708 914	1708 914	---- ---	1708 914
	PLATE, Power Guide Link Support	2	---- ---	2254 712		
23-58-337	RETAINER, Power Guide Link Support Tapping Plate on Quarter Inside Panel	2	---- ---	2254 715		
23-58-357	MOTOR, w/End PLATE	1	2573 838	2573 838	2573 838	2573 838
23-58-381	ROTOR PACKAGE, Motor Pump	1	2480 448	2480 448	2573 840	2484 183
23-58-388	BOLT PACKAGE, Reservoir	1	2480 444	2480 444	2573 839	2480 444
23-58-393	SUPPORT, Motor and Pump	1	---- ---	---- ---	---- ---	1878 112
23-58-395	PLUG, Motor Pump Reservoir	1	1641 579	1641 579	1641 579	1641 579

TYPE LETTERS Indicate: V - Valiant, L - Dart, R - Belvedere, W - Coronet, P - Plymouth, D - Dodge, C - Chrysler, Y - Imperial

★Indicates use as required.
⊟Indicates parts not listed in any previous parts book.
Right and left part numbers are on same line, first number is right, second number is left.
* Indicates change or addition.

Printed in U.S.A.
Prices and specifications subject to change without notice.

May 1965.

MyMopar.com

CODE	PART NAME AND DESCRIPTION	PER CAR	VALIANT / DART	PLYMOUTH BELVEDERE / DODGE CORONET	PLYMOUTH FURY / DODGE POLARA / CHRYSLER	IMPERIAL
23-58-0	**FOLDING TOP - Cont'd**					
23-58-396	BRACKET, Motor Mounting	1	1641 578	1641 578	2573 844	1641 578
23-58-399	"O" RING, Motor Pump Rotor	1	2480 451	2480 451	2480 451	2480 451
	"O" RING, Reservoir End Plate Seal	2	1605 298	1605 298	---- ---	1605 298
	"O" RING, Reservoir	1	---- ---	---- ---	2573 837	
23-58-400	RESERVOIR or TUBE, w/BRACKET and GROMMET, Motor Pump	1	2480 445	2480 445	2573 847	2480 445
23-58-430	PLATE, Motor Pump Cover	1	2480 453	2480 453	2480 453	2480 453
23-58-434	BRACKET, Pocket Panel Rear	1	---- ---	---- ---	---- ---	2490 076
23-58-436	SCREW, Motor Pump Cover Plate	6	2602 765	2602 765	2602 765	2602 765
23-58-437	LOOP, Top Well Cover Footman	2	---- ---	---- ---	---- ---	2499 102
23-58-469	PROP, Main Control	1	2255 894-5	2251 142-3	---- ---	2424 598-9
23-58-473	SUPPORT, Rear Side Rail to Quarter Inside Panel Reinforcement	1	2255 966-7	2244 228-9	---- ---	2480 536-7
23-58-475	PLATE, Main Control Prop Support	2	2189 711	2189 711	---- ---	2189 711
	PLATE, Tapping	2	---- ---	---- ---	2480 816	2480 816
23-58-476	BRACE, Main Control Prop Body					
	V	1	2255 956-7	2422 572-3	---- ---	2424 732-3
	L	1	2423 728-9			
23-58-478	SUPPORT, w/CATCH, Prop Brace on Quarter Panel					
	Manual	1	2424 492-3			
	NUT, w/WASHER	4	6023 204			
23-58-480	REINFORCEMENT, Rear Side Rail to Quarter Inside Panel Support	1	2255 962-3	2244 226-7	2529 024-5	2424 768-9
23-58-486	RAIL, Side					
	Front	1	2422 178-9	2482 786-7	---- ---	2480 276-7
	Center	1	2424 158-9	2482 910-1	---- ---	2483 796-7
	Rear	1	2255 868-9	2483 574-5	---- ---	2483 770-1
	RAIL, Side Complete	1	---- ---	---- ---	2573 694-5	
23-58-487	BUSHING, Center and Rear Side Rail	2	2481 718	2481 718	---- ---	2481 718
23-58-490	BRACKET, Rear Side Rail					
	Manual	1	2480 722-3			
	Power	1	2480 720-1			
	BRACKET, No. 1 Bow Top Rails	2	---- ---	---- ---	⊟2528 177	
	BRACKET, Side Rear Rail Strainer to No. 2 Bow	2	---- ---	---- ---	⊟2528 243	
23-58-496	RETAINER, Side Rear Rail Quarter Pillar	1	---- ---	---- ---	*2574 196-7	
23-58-532	SWITCH	1	*2496 921	*2496 921	*2496 921	*1972 316
23-58-533	NUT, Switch Mounting R, P, C	1	*1887 603	*1887 603	*6008 060	*6008 060

TYPE LETTERS Indicate: V - Valiant, L - Dart, R - Belvedere, W - Coronet, P - Plymouth, D - Dodge, C - Chrysler, Y - Imperial

★Indicates use as required.
⊟Indicates parts not listed in any previous parts book.
May 1965.

Printed in U.S.A.
Prices and specifications subject to change without notice.
Right and left part numbers are on same line, first number is right, second number is left.
* Indicates change or addition.

MyMopar.com

CODE	PART NAME AND DESCRIPTION	PER CAR	VALIANT / DART	PLYMOUTH BELVEDERE / DODGE CORONET	PLYMOUTH FURY / DODGE POLARA / CHRYSLER	IMPERIAL
23-58-0	**FOLDING TOP - Cont'd**					
23-58-534	KNOB, Switch					
	P	1	---- ---	---- ---	2587 502	
23-58-543	BEZEL, Switch					
	W, P	1	---- ---	2497 378	2580 100	
	D	1	---- ---	---- ---	⊟2580 156	
	BEZEL, Switch Mounting					
	W, D	1	---- ---	2497 250	2497 250	
	C	1	---- ---	---- ---	⊟2497 144	
23-58-555	HOSE					
	Upper	2	2422 143			
	Lower	2	2422 143			
	Upper	1	---- ---	2422 143	2573 657	2422 143
	Lower	1	---- ---	2422 143	2573 658	2422 143
23-58-569	WEATHERSTRIP, Header	1	2422 416	2480 187	2482 446	
	Front	1	---- ---	---- ---	2602 464	2482 833
	Rear	1	---- ---	---- ---	---- ---	2482 838
	Upper Corner Moulding	1	---- ---	---- ---	---- ---	2482 968-9
23-58-570	RETAINER, Header Weatherstrip	1	---- ---	2483 478-9		
	End	1	---- ---	2484 116-7		
	Center	1	2422 401	---- ---	2574 033	
23-58-571	SEAL, Header Weatherstrip Retainer	1	2484 159			
	SEAL, Roof Side Front or Center Rail Weatherstrip Retainer	2	---- ---	---- ---	2602 924	
23-58-572	WEATHERSTRIP, Side Rail					
	Front	1	2422 408-9	2189 798-9	2528 286-7	2424 614-5
	Center	1	2422 410-1	2480 198-9	2528 288-9	2424 616-7
	Rear	1	2422 412-3	2244 234-5	2528 290-1	2424 618-9
23-58-573	RETAINER, Side Rail Weatherstrip					
	Front	1	2422 196-7	2480 182-3	2528 280-1	2424 608-9
	Center	1	2422 194-5	2480 196-7	2528 282-3	2424 610-1
	Rear	1	2422 192-3	2251 152-3	2528 284-5	2424 612-3
23-58-600	FASTENER, Rear Bow Stud	1	6000 432	6000 432	6000 432	6000 432
23-58-601	SET-SCREW, Side Rail	4	1964 260	1964 260	---- ---	1964 260
	Power Guide Link Support	2	---- ---	6000 182		
	Control Prop Support	2	6000 182	6000 182	---- ---	6000 182
23-58-603	BOLT, Prop Link to Quarter Panel Tapping Plate Shoulder	2	6024 218			
	Rear Side Rail Bracket	2	6023 996			
	Power Guide Link Pivot Shoulder	2	---- ---	6024 218		
	Main Control Prop Shoulder	2	---- ---	6024 218	---- ---	6024 218
	No. 3 Bow to Rear Rail	2	---- ---	---- ---	2528 265	
	Power Guide Link to Quarter Inside Panel Shoulder	2	---- ---	---- ---	---- ---	6024 456
	Power Links to Side Rear Rail	2	---- ---	---- ---	---- ---	6024 802
	SCREW, Header Lock Handle Torsion Bar Adjusting	2	---- ---	---- ---	---- ---	1750 726
	Front to Center Side Rail Pivot Plate	2	---- ---	---- ---	2528 193	

TYPE LETTERS Indicate: V - Valiant, L - Dart, R - Belvedere, W - Coronet, P - Plymouth, D - Dodge, C - Chrysler, Y - Imperial

★Indicates use as required.
⊟Indicates parts not listed in any previous parts book.
Right and left part numbers are on same line, first number is right, second number is left.
* Indicates change or addition.

Printed in U.S.A.
Prices and specifications subject to change without notice.
May 1965.

MyMopar.com

CODE	PART NAME AND DESCRIPTION	PER CAR	VALIANT / DART	PLYMOUTH BELVEDERE / DODGE CORONET	PLYMOUTH FURY / DODGE POLARA / CHRYSLER	IMPERIAL
23-58-0	**FOLDING TOP - Cont'd**					
23-58-605	SPACER, Front Rail Link to Center Rail Link	2	1952 983			
	No. 1 Bow Bracket Link to Side Rail Front and Center Control Link	2	1952 983			
	Rear Rail Bracket	2	1706 470			
	Power Guide Link to Power Link	2	1706 470	1706 470		
	No. 1 Bow Bracket to Control Links	2	---- ---	1952 983		
	No. 1 Bow Side and Center Rail Link	2	---- ---	1952 983		
	Power Guide Link Assembly	2	---- ---	---- ---	---- ---	1706 470
	Forward Links Assembly	4	---- ---	---- ---	---- ---	1952 983
	Operating Cylinder Yoke to Rear Side Rail Power Link	4	---- ---	2251 617	---- ---	2251 617
	Power Guide Link to Support	2	---- ---	---- ---	---- ---	6023 926
	Header Dowel Pin Coned	2	6022 691	6022 691		
	Header Lower Panel to Dowel	2	---- ---	---- ---	---- ---	6022 696
	NUT, Side Rear Rail	2	6024 127			
	Side Rear Rail to Power Links Pin	2	---- ---	6024 128		
	Side Center Rail to Rear Rail	2	---- ---	6024 127	---- ---	6024 127
	WASHER, Main Control Prop	2	6022 117			
	No. 1 Bow Bracket	2	6000 106			
	Front and Center Side Rail	2	6000 320	6000 320	---- ---	6000 320
	Power Links to Side Rear Rail	2	---- ---	6024 296		
	Side Center Rail to Rear Rail	2	---- ---	6024 126	---- ---	6024 126
	No. 1 Bow Bracket to Center Side Rail Link	2	---- ---	6000 106	---- ---	6000 106
	No. 1 Bow Bracket to Side Center Rail Link	2	---- ---	6022 858	6022 858	6022 858
	No. 1 Bow Bracket to No. 1 Bow	4	---- ---	---- ---	6022 707	
	Side Rear Rail No. 2 Bow Bracket to No. 2 Bow	4	---- ---	---- ---	6022 707	
	Cylinder Rod Attaching 7/8" O.D. x 318" I.D. x 1/16" thk. Plastic	2	---- ---	---- ---	2528 238	
		★	---- ---	---- ---	⊟2528 192	
23-58-606	SPRING-WASHER					
	5/8" O.D. x 9/32" I.D. .	4	---- ---	---- ---	6023 893	
	21/32" O.D. x 25/64" I.D.	2	6024 126			
	25/32" O.D. x 5/8" I.D.	2	---- ---	6022 117	---- ---	6022 117
	59/64" O.D. x 49/64" I.D.	2	---- ---	---- ---	---- ---	6024 888
	1 1/32" O.D. x 1/2" I.D. .	★	6022 989	6022 989	6022 989	6022 989
23-58-607	PIN					
	No. 1 Bow Bracket to Side Center Rail Link	2	2422 153			
	Rear Bow to Rear Side Rail	2	2480 637			
	Rear Side Rail to Prop	2	2480 636			
	Side Rail Front and Center Control to Center Side Rail	2	2251 600			
	Main Control Prop to Side Rear Rail	2	2251 600			
	No. 2 Bow Bracket	2	2251 600			
	No. 1 Bow to Front Side Rail	2	2251 600			
	Center and Rear Side Rail	2	2481 732			
	Front and Center Side Rail Clevis	2	6000 319			
	No. 1 Bow to Front Side Rail	2	---- ---	2251 600		
	Center and Rear Side Rail	2	---- ---	2481 732		
	Front and Center Side Rail Clevis	2	---- ---	6000 319		
	Main Control Prop to Center Side Rail	2	---- ---	2251 600		
	Side Front and Center Rail Control Link to Side Rear Rail	2	---- ---	2251 600		
	No. 1 Bow Link to Side Front Rail	2	---- ---	2251 600		
	Rear Bow Link to Rear Side Rail	2	---- ---	2251 600		
	No. 1 Bow Bracket to Center Side Rail Clevis	2	---- ---	1950 897		

TYPE LETTERS Indicate: V - Valiant, L - Dart, R - Belvedere, W - Coronet, P - Plymouth, D - Dodge, C - Chrysler, Y - Imperial

★Indicates use as required.
⊟Indicates parts not listed in any previous parts book.

Printed in U.S.A.
Prices and specifications subject to change without notice.
Right and left part numbers are on same line, first number is right, second number is left.
* Indicates change or addition.

MyMopar.com

CODE	PART NAME AND DESCRIPTION	PER CAR	VALIANT / DART	PLYMOUTH BELVEDERE / DODGE CORONET	PLYMOUTH FURY / DODGE POLARA / CHRYSLER	IMPERIAL
23-58-0	**FOLDING TOP - Cont'd**					
23-58-607	PIN - Cont'd					
	Center and Rear Side Rail	2	---- ---	---- ---	2481 732	
	Cylinder Rod Attaching	2	---- ---	---- ---	2528 236	
	Cylinder Rod Attaching Self Locking	2	---- ---	---- ---	2528 239	
	Center and Rear Side Rail	2	---- ---	---- ---	---- ---	2481 732
	Front and Center Side Rail Clevis	2	---- ---	---- ---	---- ---	6000 319
	Main Control Prop to Center Side Rail	2	---- ---	---- ---	---- ---	2251 600
	Rear Bow Link to Rear Side Rail	2	---- ---	---- ---	---- ---	2251 600
	No. 1 Bow Bracket to Center Side Rail Clevis	2	---- ---	---- ---	---- ---	1950 897
	Power Links to Rear Side Rail	2	---- ---	---- ---	---- ---	2251 600
	Forward Links Assembly to Front Side Rail	2	---- ---	---- ---	---- ---	2251 600
	No. 2 Bow Forward Links Assembly to Rear Side Rail	2	---- ---	---- ---	---- ---	2251 600
23-59-0	**DRAIN TROUGH**					
23-59-25	HOSE, Top Well Drain					
	Cv. Cp.	2	2097 055	2097 055	2097 055	2097 055
	Drain, Folding Top Well					
	Cv. Cp.	2	2499 091	2499 091	2499 091	2499 091
23-59-35	THROUGH, Quarter Panel Deck Drain					
	Barracuda Lower	1	2526 950-1			
	Upper Corner	1	2526 800-1			
	R, except Sta. Wgn., Upper	1	---- ---	2255 682-3		
	R, except Sta. Wgn., Lower	1	---- ---	2482 972-3		
	W, except Sta. Wgn., Upper	1	---- ---	2483 844-5		
	W, except Sta. Wgn., Center	1	---- ---	2482 556-7		
	W, except Sta. Wgn., Lower	1	---- ---	2483 846-7		
	P, except Sta. Wgn., Upper	1	---- ---	---- ---	2481 520-1	
	P, except Sta. Wgn., Lower	1	---- ---	---- ---	2481 524-5	
	D, except Sta. Wgn., Upper	1	---- ---	---- ---	2482 194-5	
	D, except Sta. Wgn., Lower	1	---- ---	---- ---	2482 196-7	
	Except Sta. Wgn., Center	1	---- ---	---- ---	2482 198-9	
	C, except Sta. Wgn., Upper Corner	1	---- ---	---- ---	2482 200-1	
	C, except Sta. Wgn., Lower Corner	1	---- ---	---- ---	2482 202-3	
23-59-37	REINFORCEMENT, Quarter Panel Deck Drain Trough					
	Barracuda Side	1	2484 796-7			
	L, except Sta. Wgn.	2	2422 443			
	REINFORCEMENT, Deck Opening Side Drain Trough	1	---- ---	---- ---	---- ---	2422 382-3
	SUPPORT, Quarter Panel Deck Drain Trough to Wheelhouse					
	Cv. Cp., R	1	---- ---	2423 780-1		
	Cv. Cp., W	1	---- ---	2483 956-7		
	Cv. Cp., P	1	---- ---	---- ---	2482 186-7	
	Cv. Cp., D	1	---- ---	---- ---	2482 188-9	
	Cv. Cp., C	1	---- ---	---- ---	2482 190-1	
	SUPPORT, Roof Drain Trough to Wheelhouse Quarter Panel					
	Sta. Wgn.	1	---- ---	2217 536-7		
	SUPPORT, Deck Drain Trough Upper to Wheelhouse					
	4D., 2D. HT., 4D. HT., D	1	---- ---	---- ---	2482 154-5	
	4D., 2D. HT., 4D. HT., C	1	---- ---	---- ---	2482 156-7	
	SUPPORT, Deck Drain Trough Reinforcement to Wheelhouse Cap Panel					
	Cv. Cp.	1	---- ---	---- ---	---- ---	2481 748-9

TYPE LETTERS Indicate: V - Valiant, L - Dart, R - Belvedere, W - Coronet, P - Plymouth, D - Dodge, C - Chrysler, Y - Imperial

★Indicates use as required.
⊟Indicates parts not listed in any previous parts book.
Right and left part numbers are on same line, first number is right, second number is left.
* Indicates change or addition.

Printed in U.S.A.
Prices and specifications subject to change without notice.
March 1966 Supersedes May 1965.

MyMopar.com

CODE	PART NAME AND DESCRIPTION	PER CAR	VALIANT / DART	PLYMOUTH BELVEDERE / DODGE CORONET	PLYMOUTH FURY / DODGE POLARA / CHRYSLER	IMPERIAL
23-59-0	**DRAIN TROUGH - Cont'd**					
23-59-41	BRACE, Quarter Panel Deck Drain Trough to Floor Pan Reinforcement					
	R, except Sta. Wgn.	1	---- ---	2423 030-1		
	To Floor Pan Extension					
	W, except Sta. Wgn.	1	---- ---	2484 256-7		
	To Floor Pan					
	P, except Sta. Wgn.	1	---- ---	---- ---	2481 928-9	
	D, except Sta. Wgn.	1	---- ---	---- ---	2481 930-1	
	C, except Sta. Wgn.	1	---- ---	---- ---	2481 932-3	
23-59-42	EXTENSION, Quarter Panel Deck Drain Trough					
	P, except Sta. Wgn., Lower Corner	1	---- ---	---- ---	2483 230-1	
	Side Reinforcement . . .	1	---- ---	---- ---	---- ---	2218 818-9
23-59-56	TROUGH, Roof Side Drain					
	2D., V	1	2243 820-1	2424 532-3	2484 770-1	
	2D., L	1	2244 310-1			
	2D. HT., V except Barracuda	1	2243 822-3	2424 530-1		
	V Barracuda	1	2484 576-7			
	4D., Sta. Wgn.	1	2242 530-1	2481 356-7		
	4D. HT., P	1	---- ---	---- ---	2481 486-7	
	4D. HT., D, C Front	1	---- ---	---- ---	2481 476-7	
	4D., P Front	1	---- ---	---- ---	2484 772-3	
	4D., D, C Front	1	---- ---	---- ---	2482 386-7	
	2D. HT., except C-H Front	1	---- ---	---- ---	2482 384-5	
	2D. HT., C-H Front	1	---- ---	---- ---	2481 476-7	
	Sta. Wgn. Front	1	---- ---	---- ---	2481 628-9	
	4D. 6 Window Center	1	---- ---	---- ---	2484 520-1	
	4D. 6 Window Rear	1	---- ---	---- ---	2483 892-3	
	4D. 4 Window, D, C, Rear	1	---- ---	---- ---	2484 522-3	
	4D. HT., D Rear	1	---- ---	---- ---	*2483 894-5	
	2D. HT., except C-H Rear	1	---- ---	---- ---	2483 890-1	
	Sta. Wgn. Rear	1	2242 796-7	---- ---	2483 856-7	
	4 D. H. T., C-L, C-M, Rear, w/Vinyl Roof . . .	1	---- ---	---- ---	2483 894-5	
	TROUGH, Rear Drain					
	Sta. Wgn.	1	*2243 274			
	Sta. Wgn. Corner	1	2243 240-1			
	TROUGH, Front Pillar Drain					
	2D. H.T., P	1	---- ---	---- ---	2571 968-9	
	4D. H.T., P	1	---- ---	---- ---	2571 966-7	
	2D. H.T., 4D. H.T., D, C	1	---- ---	---- ---	2571 968-9	
	2D., 4D., Sta. Wgn.	1	---- ---	---- ---	2571 966-7	
23-59-57	COVER, Roof Drain Trough Joint					
	2D., 4D., Sta. Wgn., P	★	*2166 909	---- ---	*2571 768	
	CAP or COVER, Roof Side Drain Trough Moulding (1)					
23-59-59	FILLER, Roof Rear Corner Drain Trough					
	Sta. Wgn.	1	2243 242-3			
	FILLER, Roof Drain Through Joint Rear					
	4D. H. T., D-L	2	---- ---	---- ---	*2605 887	
23-59-60	EXTENSION, Roof Drain Through (Snaps on Side Rail Weatherstrip Retainer)					
	2D. H. T. Plastic	1	---- ---	---- ---	---- ---	*2588 628-9
	4D H. T. Plastic	1	---- ---	---- ---	---- ---	*2588 630-1
23-59-61	MOULDING, Roof Side or Rear Drain Trough (1)					

NOTE 1: See Exterior Moulding Illustrations and Moulding Legends in front of Group 23 Body section.

TYPE LETTERS Indicate:	V - Valiant	R - Belvedere	P - Plymouth	C - Chrysler
	L - Dart	W - Coronet	D - Dodge	Y - Imperial

★Indicates use as required.
⊟Indicates parts not listed in any previous parts book.

Printed in U.S.A.
Prices and specifications subject to change without notice.
Right and left part numbers are on same line, first number is right, second number is left.
* Indicates change or addition.

MyMopar.com

CODE	PART NAME AND DESCRIPTION	PER CAR	VALIANT / DART	PLYMOUTH BELVEDERE / DODGE CORONET	PLYMOUTH FURY / DODGE POLARA / CHRYSLER	IMPERIAL
23-61-0	**COWL VENT OR AIR INTAKE**					
23-61-39	DEFLECTOR, w/EXTENSION, Dash Panel Cowl Air Intake Water	1	---- ---	---- ---	---- ---	1810 453
	SEAL (sold by the inch)	1	---- ---	---- ---	---- ---	1242 974
23-61-99	CLIP, Cowl Vent Grille Cap	1	---- ---	---- ---	---- ---	6006 261
23-61-103	GRILLE, Cowl Vent	1	---- ---	---- ---	---- ---	2093 580-1
23-61-104	CAP, Cowl Vent Grille	1	---- ---	---- ---	---- ---	2189 985
23-61-116	PANEL, Cowl Top Fresh Air Opening	1	---- ---	---- ---	2491 119	
23-61-118	BRACKET, Cowl Top Panel Fresh Air Opening to Fender	1	---- ---	---- ---	2571 866-7	
23-63-0	**WEATHERSTRIP AND SEAL**					
23-63-14	WEATHERSTRIP, Window Belt					
	FRONT DOOR INNER					
	2D.	2	2254 952	2241 784	2572 211	
	2D. HT., Cv. Cp., except C					
	Right	1	2254 960	2419 618	2572 202	
	Left	1	2254 961	2419 618	2572 203	
	2D. HT., Cv. Cp., C	1	---- ---	---- ---	2581 632-3	2419 892-3
	4D., Sta. Wgn., P, D-L	2	2254 956	2241 784	2572 211	
	4D., Sta. Wgn., D-H, C	1	---- ---	---- ---	2572 200-1	
	4 D. HT., except C	1	---- ---	---- ---	2572 200-1	*2419 894-5
	4D. HT., C	1	---- ---	---- ---	2581 630-1	
	REAR DOOR INNER					
	4D., Sta. Wgn. Right	1	2254 866	2292 588		
	Left	1	2254 866	2292 589		
	4 D., Sta.Wgn., P, D-L	2	---- ---	---- ---	2572 211	
	4D., P-H, D-H, C	2	---- ---	---- ---	2572 353	
	4D. HT.	2	---- ---	---- ---	2572 353	2490 387
	Sta. Wgn., D-H, C	2	---- ---	---- ---	2572 353	
23-63-15	WEATHERSTRIP, Window Belt					
	FRONT DOOR OUTER					
	2D. Right	1	2254 952	2216 374	2491 302	
	Left	1	2254 952	2218 979	2491 303	
	2D. HT., Cv. Cp. Right	1	2254 954	2167 686	2491 306	2491 940
	Left	1	2254 955	2218 979	2491 307	2491 941
	4D., Sta. Wgn., P Right	1	2254 956	2218 980	2491 302	
	Left	1	2254 956	2218 981	2491 303	
	4D., Sta. Wgn., D-L	1	---- ---	---- ---	2491 302-3	
	4D., Sta. Wgn., D-H, C	1	---- ---	---- ---	2571 470-1	
	4D. HT.	1	---- ---	---- ---	2571 476-7	2491 942-3
	REAR DOOR OUTER					
	4D., Sta. Wgn. Right	1	2254 866	2218 982		
	Left	1	2254 866	2218 983		
	4D., P	1	---- ---	---- ---	2491 486-7	
	4D., D-L	1	---- ---	---- ---	2571 578-9	
	4D., D-H, C	1	---- ---	---- ---	2491 488-9	
	Sta. Wgn., P, D-L	1	---- ---	---- ---	2571 578-9	

TYPE LETTERS Indicate: V - Valiant, L - Dart, R - Belvedere, W - Coronet, P - Plymouth, D - Dodge, C - Chrysler, Y - Imperial

★Indicates use as required.
⊟Indicates parts not listed in any previous parts book.
Right and left part numbers are on same line, first number is right, second number is left.
* Indicates change or addition.

Printed in U.S.A.
Prices and specifications subject to change without notice.
March 1966 Supersedes May 1965.

MyMopar.com

CODE	PART NAME AND DESCRIPTION	PER CAR	VALIANT / DART	PLYMOUTH BELVEDERE / DODGE CORONET	PLYMOUTH FURY / DODGE POLARA / CHRYSLER	IMPERIAL
23-63-0	**WEATHERSTRIP AND SEAL - Cont'd**					
23-63-15	WEATHERSTRIP - Cont'd					
	REAR DOOR OUTER					
	Sta. Wgn., D-H, C	1	---- ---	---- ---	2491 488-9	
	4D. HT., P	1	---- ---	---- ---	2491 490-1	
	4D. HT., except P	1	---- ---	---- ---	2571 580-1	2492 030-1
23-63-16	CLIP, Window Belt Weatherstrip					
	Front Outer	★	2217 508	2480 904	---- ---	2480 904
	2D., 4D., Sta. Wgn., Front Outer	★	---- ---	---- ---	2571 408	
	2D. HT., 4D. HT., Cv. Cp. Front Outer	★	---- ---	---- ---	2571 407	
	All Front Inner	★	2217 508			
	Except Barracuda Quarter	★	2217 508			
	Barracuda Quarter Outer	10	2480 904			
	2D., 2D. HT. Quarter Outer	★	---- ---	2480 904	2571 408	2480 904
	Cv. Cp., R Quarter Outer	10	---- ---	2480 904		
	Cv. Cp., W Quarter Outer	★	---- ---	2480 904	2480 904	2480 904
	All Rear	20	2217 508			
	Rear Outer	★	---- ---	2480 904	2571 408	
23-63-20	WEATHERSTRIP, Window Belt					
	QUARTER INNER					
	2D., V	1	2483 196-7			
	2 D., L Right	1	2423 008	2292 790	2572 211	
	Left	1	2423 009	2292 791	2572 211	
	2D. H.T., V except Barracuda Right	1	2423 010	2572 215		
	Left	1	2423 011	2572 215		
	Barracuda	2	2602 312			
	2D. HT., L	1	2245 080-1			
	Cv. Cp. Right	1	2424 484	2419 029		
	Left	1	2424 485	2419 029		
	2D. H.T., Cv.Cp.	2	---- ---	---- ---	2572 204	2419 875
23-63-21	WEATHERSTRIP, Window Belt					
	QUARTER OUTER					
	2D., V Right	1	2243 830	2423 582	2482 206	
	Left	1	2243 830	2423 583	2482 207	
	2D., L	1	2423 008-9			
	2D. HT., V except Barracuda	1	2423 012-3			
	Barracuda	1	2484 808-9			
	2D. HT., L	1	2245 082-3			
	2D. HT., R-H, W	1	---- ---	2482 780-1		
	2D. HT., R-P	1	---- ---	2574 042-3		
	2D. H.T., except C-H	1	---- ---	---- ---	2482 208-9	
	2D. HT., C-H	1	---- ---	---- ---	2483 318-9	2492 084-5
	Cv.Cp.	1	2422 406-7	2423 586-7	2482 208-9	2424 784-5
23-63-28	SPACER, Front Door Weatherstrip to Hinge Pillar Sponge Rubber 19" x 1/2"	2	---- ---	---- ---	⊟2664 540	
23-63-33	WEATHERSTRIP, w/WEATHERCORD, Front Door Opening 2D.					
	Blue	2	1522 AB4	1522 AB4		
	Red, V, R	2	2413 615	2413 615		
	Red, L, W	2	1522 AR5	1522 AR5		
	Tan	2	1522 VT6	1522 VT6		
	Turquoise, W	2	1522 AQ4	1522 AQ4		

TYPE LETTERS Indicate: V - Valiant, L - Dart, R - Belvedere, W - Coronet, P - Plymouth, D - Dodge, C - Chrysler, Y - Imperial

★Indicates use as required.
⊟Indicates parts not listed in any previous parts book.

Printed in U.S.A.
Prices and specifications subject to change without notice.
Right and left part numbers are on same line, first number is right, second number is left.
• Indicates change or addition.

MyMopar.com

CODE	PART NAME AND DESCRIPTION	PER CAR	VALIANT / DART	PLYMOUTH BELVEDERE / DODGE CORONET	PLYMOUTH FURY / DODGE POLARA / CHRYSLER	IMPERIAL
23-63-0	**WEATHERSTRIP AND SEAL - Cont'd**					
23-63-33	WEATHERSTRIP, w/WEATHERCORD - Cont'd					
	4D., Sta. Wgn.					
	Blue	2	1522 AB4	1522 AB4		
	Gold	2	---- ---	1520 AY3		
	Gray	2	2413 614			
	Red, V, R	2	2413 615	2413 615		
	Red, L, W	2	1522 AR5	1522 AR5		
	Tan	2	1522 VT6	1522 VT6		
	Turquoise	2	1522 AQ4	1522 AQ4		
	2D. HT.					
	Black	2	1519 VX8	2413 692		
	Blue	2	1524 AB4	1524 AB4		
	Gold	2	1519 VY3	1524 AY3		
	Red, V, R	2	2413 638	2413 638		
	Red, W-H, W-P	2	1524 AR5	1524 AR5		
	Tan	2	1524 VT6	1524 VT6		
	Turquoise	2	1524 AQ4	1524 AQ4		
	Cv. Cp.					
	Black	1	1530-1 VX8	1528-9 VX8		
	Blue	1	1530-1 AB4	1528-9 AB4		
	Gold	1	1530-1 AY3	1528-9 AY3		
	Red, V, R	1	1530-1 TR6	1528-9 VR6		
	Red, L-H, W	1	1530-1 AR5	1528-9 AR5		
	Red, L-P	1	1530-1 AR7			
	Tan	1	1530-1 VT6	1528-9 VT6		
	Turquoise	1	1530-1 AQ4	1528-9 AQ4		
	Rear Door, 4D., Sta. Wgn.					
	Blue	2	1524 AB4	1524 AB4		
	Gold	2	---- ---	1524 AY3		
	Gray	2	2413 636			
	Red, V, R	2	2413 638	2413 638		
	Red, L, W	2	1524 AR5	1524 AR5		
	Tan	2	1524 VT6	1524 VT6		
	Turquoise	2	1524 AQ4	1524 AQ4		
	WEATHERSTRIP					
	ON FRONT DOOR					
	Upper and Sides					
	2 D.	1	---- ---	---- ---	⊟2588 938-9	
	4 D., Sta. Wgn.	1	---- ---	---- ---	⊟2588 940-1	
	Bottom, Includes RETAINER					
	2D.	1	---- ---	---- ---	2571 712-3	
	4D., Sta. Wgn.	1	---- ---	---- ---	2571 714-5	
	Bottom and Sides					
	2 D. H. T., Cv. Cp.	1	---- ---	---- ---	2570 980-1	2491 950-1
	4 D. H. T.	1	---- ---	---- ---	2492 538-9	2491 948-9
	On Rear of Glass Frame					
	2D. HT., Cv. Cp.	1	2217 128-9			
	ON REAR DOOR					
	Upper and Sides					
	4 D., P	1	---- ---	---- ---	⊟2588 942-3	
	4 D., except P	1	---- ---	---- ---	⊟2588 944-5	
	Sta. Wgn.	1	---- ---	---- ---	2492 544-5	

TYPE LETTERS Indicate: V - Valiant, L - Dart, R - Belvedere, W - Coronet, P - Plymouth, D - Dodge, C - Chrysler, Y - Imperial

★Indicates use as required.
⊟Indicates parts not listed in any previous parts book.
Right and left part numbers are on same line, first number is right, second number is left.
* Indicates change or addition.

Printed in U.S.A.
Prices and specifications subject to change without notice.
March 1966 Supersedes May 1965.

MyMopar.com

CODE	PART NAME AND DESCRIPTION	PER CAR	VALIANT / DART	PLYMOUTH BELVEDERE / DODGE CORONET	PLYMOUTH FURY / DODGE POLARA / CHRYSLER	IMPERIAL
23-63-0	**WEATHERSTRIP AND SEAL - Cont'd**					
23-63-33	WEATHERSTRIP - Cont'd					
	ON REAR DOOR					
	Bottom, Includes RETAINER					
	4D., Sta. Wgn.	2	---- ---	---- ---	2571 711	
	4D. HT.	2	---- ---	---- ---	2492 540	
	Bottom and Sides					
	4D. HT.	1	---- ---	---- ---	---- ---	2491 952-3
	At Lower Rear Corner of Glass at Belt Line Includes ORNAMENT					
	4 D. H. T., P Inner	1	---- ---	---- ---	2571 170-1	
	Outer	1	---- ---	---- ---	2571 176-7	
	4 D. H.T., D, C Inner	1	---- ---	---- ---	2571 172-3	
	4 D. H.T., D-L Outer	1	---- ---	---- ---	2571 178-9	
	4 D. H.T., D-H Outer	1	---- ---	---- ---	2571 180-1	
	4 D. H.T., C-L Outer	1	---- ---	---- ---	2571 182-3	
	4 D. H.T., C-M, C-H Outer	1	---- ---	---- ---	2571 184-5	
	ON BODY FRONT PILLAR					
	Cv. Cp. Upper	1	---- ---	---- ---	2526 750-1	
	To Vent Wing Upper Corner					
	Cv. Cp.	1	2218 876-7	2491 944-5		
	ON ROOF SIDE RAIL					
	2D. HT., V, except Barracuda	1	2243 874-5			
	Barracuda	1	2526 784-5			
	2D. HT., L	1	2244 244-5			
	2D. HT., except C-H	1	---- ---	2424 542-3	2482 582-3	
	2D. HT., C-H	1	---- ---	---- ---	2483 320-1	2491 922-3
	4D. HT., P	1	---- ---	---- ---	2482 584-5	
	4D. HT., except P	1	---- ---	---- ---	2482 588-9	2491 932-3
	SEAL, Door, Door Opening and Quarter Panel					
	ON FRONT DOOR					
	At Rear of Glass					
	2 D. H. T., Cv. Cp.	1	2217 128-9			
	Lock Pillar at Belt					
	2D. HT., Cv. Cp.	1	---- ---	---- ---	2570 100-1	2491 962-3
	4D. HT.	1	---- ---	---- ---	2570 092-3	
	Hinge Pillar at Belt					
	2D. HT., Cv. Cp., 4D. HT.	1	---- ---	---- ---	2570 090-1	
	Inside Panel Upper Lock Side					
	4D. HT.	1	---- ---	---- ---	---- ---	2491 972-3
	ON FRONT DOOR OPENING					
	Upper Rear Corner					
	2D., 4D., Sta. Wgn.	2	2082 973	2082 973		
	ON REAR DOOR					
	Hinge Pillar at Belt					
	4D. HT., P	1	---- ---	---- ---	2571 584-5	
	Rear Upper					
	4D. HT., P	1	---- ---	---- ---	2570 096-7	
	Upper Front Corner					
	4D., Sta. Wgn.	1	---- ---	---- ---	2571 112-3	
	Hinge Pillar					
	4D. HT., except P	1	---- ---	---- ---	2570 094-5	

TYPE LETTERS Indicate: V - Valiant, L - Dart, R - Belvedere, W - Coronet, P - Plymouth, D - Dodge, C - Chrysler, Y - Imperial

★Indicates use as required.
⊟Indicates parts not listed in any previous parts book.
March 1966 Supersedes May 1965.

Printed in U.S.A.
Prices and specifications subject to change without notice.
Right and left part numbers are on same line, first number is right, second number is left.
* Indicates change or addition.

MyMopar.com

23-63-0 WEATHERSTRIP AND SEAL - Cont'd

CODE	PART NAME AND DESCRIPTION	PER CAR	VALIANT / DART	PLYMOUTH BELVEDERE / DODGE CORONET	PLYMOUTH FURY / DODGE POLARA / CHRYSLER	IMPERIAL
23-63-33	SEAL - Cont'd					
	ON REAR DOOR OPENING					
	Upper Corner	2	2082 974			
	Lock Pillar at Belt	1	---- ---	---- ---	---- ---	2491 980-1
	ON QUARTER PANEL					
	At Lock Face					
	2D. HT., Cv. Cp.	1	2422 846-7	2167 198-9		
	Lock Pillar at Belt					
	2 D. HT., Cv. Cp.	1	---- ---	---- ---	2526 834-5	*2491 974-5
23-63-37	SEAL, Tailgate, Roof Side Rail and Windshield					
	TAILGATE					
	Tailgate Pillar at Belt	1	---- ---	---- ---	2526 838-9	
	Tailgate Glass Run Channel at Roof Rear Rail	1	2254 766			
	Tailgate Glass Run Channel at Rear Upper Pillar	2	2254 767	2254 767	2254 766	
	ROOF SIDE RAIL					
	Roof Side Rail Weatherstrip Retainer to Drain Trough					
	2D. H.T., V except Barracuda	2	2244 321			
	Barracuda, L	2	2602 678			
	Roof Side Rail Weatherstrip Retainer to Body Front Pillar					
	2 D. H. T.	2	*2529 050	*2529 050		
	Roof Side Rail Weatherstrip Retainer to Roof Rail					
	2D. HT., 4D. HT.	2	---- ---	2424 674	2528 608	
	WINDSHIELD					
	Windshield Opening Upper Frame					
	Cv. Cp.	1	2254 766	---- ---	2573 951	
23-63-42	RETAINER, Body Front Pillar Door Weatherstrip					
	Cv. Cp.	1	---- ---	---- ---	2484 826-7	
	RETAINER, Front Pillar Upper Corner Weatherstrip Inner and Outer					
	4D. HT., P	1	---- ---	---- ---	2571 296-7	
23-63-55	RETAINER, Roof Side Rail Weatherstrip					
	2D. HT., V except Barracuda	1	2243 876-7			
	Barracuda	1	2573 664-5			
	2D. HT., L	1	2480 286-7			
	2D. HT., Front and Rear	1	---- ---	2482 796-7		
	2D. HT., Rear Only	1	---- ---	2482 826-7		
	2D. H.T., except C-H, Includes COVER	1	---- ---	---- ---	2528 838-9	
	2D. HT., C-H	1	---- ---	---- ---	2528 856-7	2491 918-9
	4D. HT., P	1	---- ---	---- ---	2484 682-3	2492 588-9
	4 D. H. T., D, C, Includes COVER	1	---- ---	---- ---	2528 780-1	
	RETAINER, w/CAP, Front Pillar Upper and Corner Weatherstrip					
	2D. HT.	1	---- ---	---- ---	2571 294-5	
	4 D. H. T., D, C	1	---- ---	---- ---	2571 294-5	
	RETAINER, Roof Side Rail Quarter Window Glass Weatherstrip					
	Barracuda Inner	1	2424 670-1			
	Sta. Wgn.	1	---- ---	---- ---	2484 010-1	
	RETAINER, Quarter Window Inner Weatherstrip					
	Barracuda	1	2526 792-3			

TYPE LETTERS Indicate: V - Valiant, L - Dart, R - Belvedere, W - Coronet, P - Plymouth, D - Dodge, C - Chrysler, Y - Imperial

★Indicates use as required.
⊟Indicates parts not listed in any previous parts book.
Right and left part numbers are on same line, first number is right, second number is left.
* Indicates change or addition.

Printed in U.S.A.
Prices and specifications subject to change without notice.
March 1966 Supersedes May 1965.

MyMopar.com

CODE	PART NAME AND DESCRIPTION	PER CAR	VALIANT / DART	PLYMOUTH BELVEDERE / DODGE CORONET	PLYMOUTH FURY / DODGE POLARA / CHRYSLER	IMPERIAL
23-63-0	**WEATHERSTRIP AND SEAL - Cont'd**					
23-63-58	CAP, Roof Side Rail Weatherstrip Retaining					
	2D. HT.	1	2423 624-5	2252 608-9		
	4D. HT.	2	---- ---	---- ---	---- ---	2492 626
23-63-61	SUPPORT, Roof Side Rail Quarter Window Weatherstrip and Headlining					
	2D. HT., V except Barracuda	1	2255 634-5			
	SUPPORT, Quarter Window Inner Weatherstrip Retainer					
	Barracuda	1	2574 168-9			
	SUPPORT, Roof Side Rail Quarter Window Glass Weatherstrip					
	Sta. Wgn.	1	---- ---	---- ---	2484 008-9	
23-63-94	WEATHERSTRIP, Rear Door Window Front Frame					
	4D. HT., P	1	---- ---	---- ---	2491 492-3	
	4 D. H. T., D, C	1	---- ---	---- ---	2571 310-1	2492 358-9
23-63-97	WEATHERSTRIP, Rear Door Rear Glass Stationary					
	Sta. Wgn.	2	2217 250			
23-63-100	WEATHERSTRIP, Quarter Window					
	2D. HT., V except Barracuda	1	2243 882-3			
	4D. 6 Window	2	---- ---	---- ---	2482 222	
	Sta. Wgn. Right	1	2255 726	2251 320	2482 230	
	Left	1	2255 727	2251 321	2482 230	
	SEAL, Quarter Window Glass Lower Frame					
	Sta. Wgn.	2	---- ---	---- ---	2603 296	
23-63-104	WEATHERSTRIP, Quarter Window Glass Front Frame					
	2D. HT.	1	---- ---	2166 964-5	2529 130-1	2492 358-9
	Cv.Cp.	1	---- ---	---- ---	2529 092-3	2492 358-9
23-63-105	RETAINER, Window Glass Front Frame Weatherstrip					
	2D. HT., except C-H					
	Quarter, incl. MOULDING	1	---- ---	---- ---	⊟2782 874-5	
	2D. HT., C-H Quarter	1	---- ---	---- ---	2483 934-5	2491 722-3
	Cv.Cp. Quarter	1	---- ---	---- ---	2529 094-5	
	4D. 6 Window Quarter	1	---- ---	---- ---	2602 106-7	
	Cv.Cp. Quarter	1	---- ---	---- ---	---- ---	2491 722-3
	4D. HT., P Rear	1	---- ---	---- ---	2491 524-5	2491 722-3
	4 D. H. T., D, C Rear	1	---- ---	---- ---	2570 058-9	
	SCREW	★	---- ---	---- ---	6024 997	6000 374
23-63-110	LOCKINGSTRIP, Quarter Window Glass Weatherstrip					
	Sta. Wgn. Mylar	2	2243 513	2422 471		
	Sta. Wgn. Rubber	2	---- ---	2255 027		
23-63-112	WEATHERSTRIP, Rear Window Glass					
	2D., 4D., V	1	2242 532	2424 540		
	2D., 2D. H.T., 4D., L	1	2574 017			
	2D. HT., V except Barracuda Use w/o Vinyl Roof	1	2242 532			
	2D. HT., V except Barracuda Use w/Vinyl Roof	1	2480 825			

TYPE LETTERS Indicate: V - Valiant, L - Dart, R - Belvedere, W - Coronet, P - Plymouth, D - Dodge, C - Chrysler, Y - Imperial

★Indicates use as required.
⊟Indicates parts not listed in any previous parts book.
March 1966 Supersedes May 1965.

Printed in U.S.A.
Prices and specifications subject to change without notice.
Right and left part numbers are on same line, first number is right, second number is left.
* Indicates change or addition.

MyMopar.com

23-63-0 WEATHERSTRIP AND SEAL - Cont'd

CODE	PART NAME AND DESCRIPTION	PER CAR	VALIANT / DART	PLYMOUTH BELVEDERE / DODGE CORONET	PLYMOUTH FURY / DODGE POLARA / CHRYSLER	IMPERIAL
23-63-112	WEATHERSTRIP - Cont'd					
	Barracuda	1	2574 040			
	2D. H.T.	1	---- ---	2574 014		
	2D., 4D., 4D. HT., P	1	---- ---	---- ---	2482 577	
	4 D., D, C-L	1	---- ---	---- ---	2482 579	
	4 D., C-H w/o Vinyl Roof	1	---- ---	---- ---	2482 579	
	4 D., C-H w/Vinyl Roof	1	---- ---	---- ---	2605 052	
	4 D. H. T., D, C-L, C-M, w/o Vinyl Roof	1	---- ---	---- ---	*2482 580	
	4 D. H. T., D, C-L, C-M, w/Vinyl Roof	1	---- ---	---- ---	*2605 882	
	4 D. H. T., C-H	1	---- ---	---- ---	*2482 580	
	2 D. H. T., except C-H w/o Vinyl Roof	1	---- ---	---- ---	2482 578	
	2 D. H. T., except C-H w/Vinyl Roof	1	---- ---	---- ---	2605 049	
	2 D. H. T., C-H	1	---- ---	---- ---	2482 580	*2605 056
	4 D. H. T., Y-M	1	---- ---	---- ---	---- ---	*2605 053
	4 D. H. T., Y-H	1	---- ---	---- ---	---- ---	*2605 056
23-63-114	LOCKINGSTRIP, Rear Window Glass Weatherstrip					
	V	2	*2082 278			
23-63-117	CAP, Rear Window Glass Weatherstrip Lockingstrip					
	V	2	2424 350			
	CAP, Quarter Window Lockingstrip					
	Sta. Wgn. Upper Front	2	2424 625			
	Lower Rear	2	2424 626			
23-63-126	WEATHERSTRIP, Front Door Vent Wing					
	2D., 4D., Sta. Wgn.	1	2216 638-9	2218 450-1	2491 298-9	
	2D. HT., Cv. Cp.	1	2217 404-5	2218 452-3	2491 300-1	2571 008-9
	4D. HT.	1	---- ---	---- ---	2491 300-1	2571 008-9
	WEATHERSTRIP, Vent Wing Auxiliary					
	2D. HT., Cv. Cp.	2	2571 670	2571 670		
	2D., 4D., Sta. Wgn.	2	---- ---	2217 908		
	All	1	---- ---	---- ---	---- ---	1751 570-1
23-63-127	RETAINER, w/Divisional CHANNEL, Front Door Vent Wing Weatherstrip					
	2D., 4D., Sta. Wgn.	1	2492 120-1	2571 560-1	2491 324-5	
	2D. HT., Cv. Cp.	1	2492 122-3			
	RETAINER, Vent Wing Weatherstrip					
	2D. HT., Cv. Cp. Upper	1	---- ---	2218 512-3		
	All Front	1	---- ---	---- ---	---- ---	2491 696-7
23-63-130	WEATHERSTRIP, Front Door Vent Wing Divisional Channel	4	---- ---	---- ---	2571 902	
23-63-131	CLIP, Front Door Weatherstrip Hold-Down	2	---- ---	---- ---	---- ---	2571 406
23-63-136	RETAINER, Quarter Window Weatherstrip					
	4D. 6 Window	1	---- ---	---- ---	2529 122-3	
	Sta. Wgn. To Wheelhouse Belt . . .	1	---- ---	---- ---	2484 006-7	
	Sta. Wgn. To Body Lock Upper Pillar	1	---- ---	---- ---	2484 020-1	
	Sta. Wgn. To Rear Upper Pillar Reinforcement	1	---- ---	---- ---	2484 032-3	
	Sta. Wgn. Includes Wheelhouse Cover RETAINER	1	---- ---	---- ---	*2656 468-9	

TYPE LETTERS Indicate: V - Valiant, L - Dart, R - Belvedere, W - Coronet, P - Plymouth, D - Dodge, C - Chrysler, Y - Imperial

★Indicates use as required.
⊟Indicates parts not listed in any previous parts book.
Right and left part numbers are on same line, first number is right, second number is left.
* Indicates change or addition.

Printed in U.S.A.
Prices and specifications subject to change without notice.
March 1966 Supersedes May 1965.

MyMopar.com

CODE	PART NAME AND DESCRIPTION	PER CAR	VALIANT / DART	PLYMOUTH BELVEDERE / DODGE CORONET	PLYMOUTH FURY / DODGE POLARA / CHRYSLER	IMPERIAL
23-63-0	**WEATHERSTRIP AND SEAL - Cont'd**					
23-63-171	WEATHERSTRIP, Tailgate Opening Lower	1	2242 836	2484 400	2482 501	
23-63-172	WEATHERSTRIP, Deck Lid Opening					
	R	1	*2422 201	*2422 201	*2422 201	*2422 201
	W	1	---- ---	2482 563		
23-63-181	WEATHERSTRIP, Tailgate Glass Belt					
	w/CLIPS Inner	1	*2242 837	*2251 452	*2482 502	
	Plain Rubber Outer	1	*2423 533	*2217 518	*2482 503	
23-63-183	CLIP, Tailgate Glass Inner Belt Weatherstrip	8	*2217 508	*2217 508	*2217 508	

23-64-0 WINDOW AND VENT WING

NOTE 1: PLACE ORDERS DIRECT WITH:

A. YOUR USUAL SOURCE OF SUPPLY FOR CHRYSLER PARTS
B. CHRYSLER "SAFEGUARD" DISTRIBUTOR
C. CENTERLINE PARTS PLANTS

NOTE 2: PLACE ORDERS DIRECT WITH YOUR CHRYSLER "SAFEGUARD" DISTRIBUTOR

NOTE 3: PLACE ORDERS DIRECT WITH YOUR LOCAL GLASS SOURCE

23-64-4	BUMPER, Electric Front and Rear Door Window Glass Down Position Stop	4	---- ---	1954 083	1954 083	1954 083
	BUMPER, Electric Quarter Window Down Stop	2	---- ---	1954 083	2483 940	2482 754
	BUMPER, Quarter Window Glass Front Stop Up Position	2	---- ---	---- ---	2527 982	
23-64-10	GLASS, w/Lower CHANNEL, Tailgate Window (see Note 1)					
	Clear	1	---- ---	2217 509		
	Tinted	1	---- ---	2217 510		
	GLASS, Tailgate Window (see Note 1)					
	Clear	1	2242 813	---- ---	2482 480	
	Tinted	1	2242 814	---- ---	2482 481	

NOTE: See Part Type Code 23-09-64 for Tailgate Glass Lower Channel.

23-64-12	STOP, Front Door Window Up Position					
	2D. H.T., Cv.Cp.	★	2216 827	2588 409	2491 293	2588 409
	4D. H.T.	4	---- ---	---- ---	---- ---	2588 409
	2D. HT., V, except Barracuda	★	2255 228	2480 753	---- ---	2491 040
	V Barracuda	2	2528 793			
	2D. HT., L	2	2255 339			
	Cv. Cp.	★	---- ---	2255 345	---- ---	2491 040
	STOP, Quarter Window Regulator Up Position					
	2D. HT., except C-H					
	Front	2	---- ---	---- ---	2527 920	
	2D. HT., except C-H					
	Rear	2	---- ---	---- ---	2527 921	
	2D. HT., C-H	4	---- ---	---- ---	2526 827	
	STOP, Rear Door Window Up Position					
	4D. H.T.	4	---- ---	---- ---	2588 409	2588 409
	STOP, Front Door Window Regulator Door Down Position.	2	---- ---	---- ---	2520 562	
	STOP, Quarter Electric Window Regulator Down	2	---- ---	2486 656		

TYPE LETTERS Indicate: V - Valiant, L - Dart, R - Belvedere, W - Coronet, P - Plymouth, D - Dodge, C - Chrysler, Y - Imperial

★Indicates use as required.
⊟Indicates parts not listed in any previous parts book.
May 1965.

Printed in U.S.A.
Prices and specifications subject to change without notice.
Right and left part numbers are on same line, first number is right, second number is left.
• Indicates change or addition.

MyMopar.com

23-64-0 WINDOW AND VENT WING - Cont'd

CODE	PART NAME AND DESCRIPTION	PER CAR	VALIANT / DART	PLYMOUTH BELVEDERE / DODGE CORONET	PLYMOUTH FURY / DODGE POLARA / CHRYSLER	IMPERIAL
23-64-12	BRACKET, Front Door Inside Panel Up Stop Reinforcement Front					
	2 D. H. T., Cv. Cp.	2	---- ---	*2588 055		
	BRACKET, Electric Front, Quarter or Rear Door Window Glass Lower Frame Down Stop	★	---- ---	1963 393	2218 318	2218 318
	BRACKET, Door Glass Channel Down Stop Electric Window Lift	★	---- ---	2217 193	2492 676	
	SUPPORT, Front Door Electric Window Lift Down Stop	1	---- ---	2217 182-3		
	SUPPORT, Quarter Electric Window Regulator Down Stop Bracket					
	Cv. Cp.	2	---- ---	2216 296		
	SUPPORT, Rear Door Electric Window Lift Down Stop	2	---- ---	2217 203		
23-64-17	ANTI-RATTLER, Front Door Electric Window Regulator	2	---- ---	---- ---	2528 040	
	ANTI-RATTLER, Quarter Window Glass Rear Stop Up Position					
	2D. HT., except C-H	2	---- ---	---- ---	2528 040	
	2D. HT., C-H	4	---- ---	---- ---	2528 037	
23-64-28	RETAINER, w/Weld SCREW, Front and Rear Door Glass Down Stop Bracket Power Windows	4	---- ---	---- ---	2570 017	
23-64-48	FRAME, Front Door Vent Wing					
	2D. HT.	1	2216 640-1			
	Cv. Cp.	1	2217 416-7			
	STUD, Adjusting	2	6023 264			
	FRAME, w/Divisional CHANNEL, Front Door Vent Wing					
	2D. HT.	1	---- ---	2218 484-5		
	Cv. Cp.	1	---- ---	2491 888-9		
	4D. HT., P	1	---- ---	---- ---	2491 326-7	
	4 D. H. T., D, C	1	---- ---	---- ---	*2491 328-9	
	2D. HT.	1	---- ---	---- ---	2491 328-9	
	Cv. Cp.	1	---- ---	---- ---	2491 330-1	
	FRAME, w/o Divisional Channel, Front Door Vent Wing	1	---- ---	---- ---	---- ---	2571 038-9
	CHANNEL, Front Door Vent Wing Divisional	1	---- ---	---- ---	---- ---	2571 020-1
	SCREW	2	---- ---	---- ---	6025 199	
23-64-54	PLATE, Front Door Inside Panel Vent Wing Divisional Channel Attaching Bracket	2	2217 663			
23-64-62	PLATE, Front Door Vent Wing Glass Lower Attaching Outer	1	---- ---	2216 210-1		
	SCREW	2	---- ---	6022 988		
23-64-66	FRAME, Rear Window Opening Upper					
	2D., 4D., 2D. HT., V, except Barracuda	1	2242 514			
	V Barracuda	1	2576 133			
	2D., 4D., 2D. HT., L	1	2481 056			
	2D., 4D.	1	---- ---	2424 508		
	2D. HT.	1	---- ---	2424 509		
	2D., 4D., 4D. HT., P	1	---- ---	---- ---	2481 474	
	4 D., D, C	1	---- ---	---- ---	*2482 294	
	4 D. H. T., D, C	1	---- ---	---- ---	*2481 484	
	2D. HT., except C-H	1	---- ---	---- ---	2482 281	
	2D. HT., C-H	1	---- ---	---- ---	2481 484	

TYPE LETTERS Indicate: V - Valiant, L - Dart, R - Belvedere, W - Coronet, P - Plymouth, D - Dodge, C - Chrysler, Y - Imperial

★Indicates use as required.
⊟Indicates parts not listed in any previous parts book.
Right and left part numbers are on same line, first number is right, second number is left.
* Indicates change or addition.

Printed in U.S.A.
Prices and specifications subject to change without notice.
May 1965.

MyMopar.com

CODE	PART NAME AND DESCRIPTION	PER CAR	VALIANT / DART	PLYMOUTH BELVEDERE / DODGE CORONET	PLYMOUTH FURY / DODGE POLARA / CHRYSLER	IMPERIAL
23-64-0	**WINDOW AND VENT WING - Cont'd**					
23-64-66	FRAME - Cont'd					
	2D. HT., 4D. HT., w/o Reinforcement	1	---- ---	---- ---	---- ---	2422 271
	w/REINFORCEMENT	1	---- ---	---- ---	---- ---	2525 877
	2D., 4D., 2D. HT., V	1	2242 515			
	FRAME, Rear Window Opening Lower					
	2D., 4D., 2D. HT., V End	1	2242 516-7			
	2D., 4D., 2D. HT., L	1	2481 055			
	2D., 4D., 2D. HT., L End	1	2481 044-5			
	2D., 4D.	1	---- ---	2244 007		
	2D. HT.	1	---- ---	2424 511		
	4D., 4D. HT., 2D., 2D. HT., P	1	---- ---	---- ---	2481 461	
	4 D., 4 D. H. T., D, C	1	---- ---	---- ---	*2481 460	
	2D. HT., except C-H	1	---- ---	---- ---	2481 461	
	2D. HT., C-H	1	---- ---	---- ---	2481 460	
	2D. HT.	1	---- ---	---- ---	---- ---	2218 699
	4D. HT., Y-M	1	---- ---	---- ---	---- ---	2218 288
	4D. HT., Y-H	1	---- ---	---- ---	---- ---	2218 699
	FRAME, Rear Window Opening Side					
	V Barracuda	1	2484 594-5	---- ---	---- ---	2491 906-7
	4D., D, C	1	---- ---	---- ---	2482 298-9	
23-64-67	REINFORCEMENT, Rear Window Opening					
	4D. 4 Window, D, C, Side	1	---- ---	---- ---	2484 534-5	
	2D. HT., 4D. HT., Side	1	---- ---	---- ---	---- ---	2588 120-1
	2D. HT., 4D. HT., Upper	1	---- ---	---- ---	---- ---	2422 272
23-64-68	EXTENSION, Rear Window Upper	1	---- ---	---- ---	---- ---	2218 795
	EXTENSION, Rear Window Side Frame to Wheelhouse					
	4D., D	1	---- ---	---- ---	2573 564-5	
	4D., C	1	---- ---	---- ---	2573 566-7	
23-64-71	BUMPER, Front Door Vent Wing Frame					
	2D. HT.	1	2216 654-5	2167 326-7		
	Cv. Cp.	1	2217 572-3	2218 448-9		
	4D. HT., P	1	---- ---	---- ---	2571 330-1	
	4 D. H. T., D, C	1	---- ---	---- ---	*2491 294-5	
	2D. HT., Cv. Cp.	1	---- ---	---- ---	2491 294-5	
	PLUG, Vent Wing Divisional Channel Upper to Door Frame					
	2 D., 4 D., Sta. Wgn.	2	---- ---	---- ---	⊟2664 271	
23-64-74	SEAL, Front Door Vent Wing Glass Upper					
	2D., 4D., Sta. Wgn.	2	2216 631			
23-64-75	MOTOR, w/MECHANISM, Front Door Electric Vent Wing					
	C	1	---- ---	---- ---	2428 282-3	2428 282-3
23-64-76	BRACKET, Electric Vent Wing Motor Mounting	1	---- ---	---- ---	---- ---	2428 290-1
	SCREW, w/WASHER, Bracket to Transmission	3	---- ---	---- ---	---- ---	180 020
23-64-79	COUPLING, Electric Vent Wing Drive Shaft to Pivot	1	---- ---	---- ---	---- ---	2428 286-7
	SCREW	2	---- ---	---- ---	---- ---	6023 852
23-64-81	TERMINAL and INSULATOR PACKAGE, Electric Vent Wing Motor Wiring	★	---- ---	---- ---	---- ---	2495 239

TYPE LETTERS Indicate: V - Valiant, L - Dart, R - Belvedere, W - Coronet, P - Plymouth, D - Dodge, C - Chrysler, Y - Imperial

★Indicates use as required.
⊟Indicates parts not listed in any previous parts book.
May 1965.

Printed in U.S.A.
Prices and specifications subject to change without notice.
Right and left part numbers are on same line, first number is right, second number is left.
* Indicates change or addition.

MyMopar.com

23-64-0 WINDOW AND VENT WING - Cont'd

CODE	PART NAME AND DESCRIPTION	PER CAR	VALIANT / DART	PLYMOUTH BELVEDERE / DODGE CORONET	PLYMOUTH FURY / DODGE POLARA / CHRYSLER	IMPERIAL
23-64-82	CLIP, Front Door Window Regulator Coupling					
	Manual	2	---- ---	---- ---	2428 284	
	Electric	2	---- ---	---- ---	2428 284	2428 284
23-64-85	PLATE, Rear Window Opening Upper Frame					
	V Barracuda	1	2528 534-5			
23-64-93	SHAFT, Vent Wing Lower Pivot to Regulator Socket	2	---- ---	---- ---	2571 216	
23-64-95	BEARING, Vent Wing Lower Pivot to Regulator Socket Shaft	4	---- ---	---- ---	2571 215	
23-64-198	CHANNEL, Rear Door Stabilizer					
	Outer	1	---- ---	---- ---	---- ---	2218 704-5
	Inner	1	---- ---	---- ---	---- ---	2218 702-3
	CHANNEL, Quarter Window Glass Stabilizer					
	Outer	1	---- ---	---- ---	---- ---	2482 738-9
	Inner	1	---- ---	---- ---	---- ---	2482 736-7
	CHANNEL, Quarter Window Glass Lower Frame Stabilizer					
	Cv. Cp.	1	---- ---	---- ---	2529 138-9	
23-64-200	SUPPORT, Quarter Window Glass Stabilizer Channel					
	Inner	2	---- ---	---- ---	---- ---	*2482 954
	Outer	1	---- ---	---- ---	---- ---	⊟2482 942-3
	SCREW, w/WASHER	6	---- ---	---- ---	---- ---	6024 813
23-64-202	SEAL, Quarter Window Glass Lower Frame Stabilizer Channel					
	Cv. Cp.	1	---- ---	---- ---	2573 776-7	
23-64-213	FILLER, Quarter Outside Panel Rear Window Opening Corner					
	2D. HT., except C-H	1	---- ---	---- ---	2484 214-5	
	2 D. H. T., C-H	1	---- ---	---- ---	2482 000-1	
	2 D., 4 D., 4 D. H. T., P	1	---- ---	---- ---	2484 212-3	
	4 D., D, C	1	---- ---	---- ---	2484 210-1	
	4 D. H. T., D, C	1	---- ---	---- ---	2482 000-1	
23-64-216	SUPPORT, Quarter Inside Panel Quarter Window Retainer					
	4D. 6 Window	2	---- ---	---- ---	2484 240-1	
23-64-225	HINGE, Quarter Window Glass Pivot					
	2D. HT., V, except Barracuda	1	2482 872-3			
23-64-233	PLATE, Front Door Inside Panel to Vent Wing Bracket Upper Attaching					
	2D. HT., Cv. Cp.	2	2218 801	2218 801		
23-64-235	SNAP RING, Front Door Vent Wing Lower Pivot to Regulator Socket Shaft	2	---- ---	---- ---	2571 214	
23-64-237	CLAMP, Front Door Vent Wing Upper Pivot	2	1708 998	1708 998	1708 998	
	PLATE, Front Door Vent Wing Upper Pivot Base	2	---- ---	---- ---	---- ---	1755 366
23-64-240	PIVOT, Front Door Vent Wing Upper					
	2 D., 4 D., Sta. Wgn.	1	2216 626-7			
	All	1	---- ---	*2571 562-3		

TYPE LETTERS Indicate: V - Valiant, L - Dart, R - Belvedere, W - Coronet, P - Plymouth, D - Dodge, C - Chrysler, Y - Imperial

★Indicates use as required.
⊟Indicates parts not listed in any previous parts book.
Right and left part numbers are on same line, first number is right, second number is left.
* Indicates change or addition.

Printed In U.S.A.
Prices and specifications subject to change without notice.
March 1966 Supersedes May 1965.

MyMopar.com

CODE	PART NAME AND DESCRIPTION	PER CAR	VALIANT / DART	PLYMOUTH BELVEDERE / DODGE CORONET	PLYMOUTH FURY / DODGE POLARA / CHRYSLER	IMPERIAL
23-64-0	**WINDOW AND VENT WING - Cont'd**					
23-64-242	BRACKET, Door Vent Wing Upper Pivot					
	2D., 4D., Sta. Wgn., Right	1	2216 620	---- ---	2491 385	
	Left	1	*2216 621	---- ---	2491 385	
	2D. HT., Cv. Cp.	1	2217 408-9			
	All	1	---- ---	2167 310-1	---- ---	2094 462-3
	BRACKET, w/PIVOT, Door Vent Wing Upper					
	2D. HT., Cv. Cp., Right	1	2217 548	---- ---	2571 092	2094 462
	Left	1	2217 549	---- ---	2571 092	2094 463
	4D. HT. Right	1	---- ---	---- ---	2571 092	2094 462
	Left	1	---- ---	---- ---	2571 092	2094 463
	BRACKET, Front Door Inside Panel Vent Wing Upper Attaching					
	2D. HT., Cv. Cp.	1	2218 806-7			
	BRACKET, Front Door Vent Wing Handle Shaft					
	Inner Includes Lower PIVOT	1	---- ---	*2167 628-9		
	SCREW	2	---- ---	6023 537		
	CLAMP, Front Door Vent Wing Pivot	2	---- ---	---- ---	*2491 392	
	SCREW, Upper Pivot	2	6000 374	6000 374	6000 374	6000 374
	SCREW, Lower Pivot	2	6006 244	6006 244	6006 244	6006 244
23-64-243	SEAL, Door Vent Wing Handle Bracket					
	Inner	2	---- ---	2216 220		
	Outer	2	---- ---	2216 221		
23-64-246	SPACER, Door Vent Wing Upper Pivot					
	2D., 4D., Sta. Wgn.	2	---- ---	2571 543		
	WASHER, Door Vent Wing Upper Clamp to Glass	2	*1909 944	*1909 944	*1909 944	
23-64-254	TRACK, Rear Door Glass					
	4D. HT., P Front	1	---- ---	---- ---	2570 188-9	
	4 D. H. T., D, C Front	1	---- ---	---- ---	*2570 194-5	
	4D. HT. Rear	1	---- ---	---- ---	2570 502-3	
23-64-255	FRAME, Front Door Window Glass Upper and Rear					
	2D. HT., Cv. Cp.	1	---- ---	---- ---	---- ---	2491 838-9
	4D. HT.	1	---- ---	---- ---	---- ---	2491 840-1
	FRAME, Rear Door Window Glass Upper	1	---- ---	---- ---	---- ---	2491 088-9
	SCREW, Self Locking	12	---- ---	---- ---	---- ---	6000 374
	NUT, w/WASHER	12	---- ---	---- ---	---- ---	6023 214
23-64-263	WASHER, Quarter Window Glass Lower Frame Stabilizer					
	Cv. Cp.	2	---- ---	---- ---	1561 065	
23-64-269	BRACKET, w/ROLLER, Rear Door Window Track					
	4D. HT.	6	---- ---	---- ---	2486 058	
	ROLLER, w/GUIDE, Rear Door Window Rear Track Bracket	2	---- ---	---- ---	---- ---	2217 156
	BRACKET, w/ROLLER, Quarter Window Track					
	Cv. Cp.	★	2255 973	2167 853	2486 058	2217 156
	2D. H.T.	2	---- ---	2217 156		
	2D. H.T., except C-H Lower	2	---- ---	---- ---	2520 658	
	2D. H.T., except C-H Upper	2	---- ---	---- ---	2520 659	
	2D. HT., C-H	2	---- ---	---- ---	2486 058	2217 156
	BRACKET, Quarter Inside Panel to Roller Track					
	2D. HT., except C-H	2	---- ---	2481 700	2484 982	

TYPE LETTERS Indicate: V - Valiant, L - Dart, R - Belvedere, W - Coronet, P - Plymouth, D - Dodge, C - Chrysler, Y - Imperial

★Indicates use as required.
⊟Indicates parts not listed in any previous parts book.
May 1965.

Printed in U.S.A.
Prices and specifications subject to change without notice.
Right and left part numbers are on same line, first number is right, second number is left.
* Indicates change or addition.

MyMopar.com

CODE	PART NAME AND DESCRIPTION	PER CAR	VALIANT / DART	PLYMOUTH BELVEDERE / DODGE CORONET	PLYMOUTH FURY / DODGE POLARA / CHRYSLER	IMPERIAL
23-64-0	**WINDOW AND VENT WING - Cont'd**					
23-64-269	SUPPORT, Rear Door Inside Panel to Rear Track					
	4D. HT.	2	---- ---	---- ---	2218 059	2218 059
	SUPPORT, Quarter Inside Panel Roller Track					
	Cv. Cp., P, D Front	2	---- ---	---- ---	2218 059	
	2D. HT., C-H Front	2	---- ---	---- ---	2218 059	
	2D. HT., C-H Rear	4	---- ---	---- ---	2218 059	2218 059
	SUPPORT, Front Door Inside Panel to Rear Track Center	2	---- ---	---- ---	---- ---	2218 059
23-64-272	SPACER, Window Glass to Lower Frame					
	Cv. Cp. Quarter	4	---- ---	2167 856		
	Sta. Wgn. Tailgate	★	2167 856	---- ---	2167 856	
	GROMMET, Window Glass to Lower Frame					
	Cv. Cp. Quarter	★	2424 650	2167 857		
	WASHER, Window Glass to Lower Channel					
	Sta. Wgn. Tailgate, Steel	★	2423 534	---- ---	2423 534	
	Tailgate, Rubber	★	2423 535	---- ---	2423 535	
	NUT, w/WASHER, Quarter Window Glass to Lower Frame Attaching					
	Cv. Cp.	4	---- ---	6010 048		
	SCREW, w/WASHER, Quarter Window Glass to Lower Frame Attaching					
	2D. HT.	4	6023 553	6023 553		
23-64-273	SUPPORT, Front Door Vent Wing Divisional Channel Lower					
	Right	1	2216 673	2167 880	2571 076	2491 914
	Left	1	2216 673	2167 881	2571 076	2491 914
	BRACKET, Door Vent Wing Divisional					
	Lower	2	---- ---	---- ---	---- ---	2218 119
	Upper	1	---- ---	---- ---	---- ---	2571 004-5
	SCREW, w/WASHER, Support	2	---- ---	---- ---	6025 557	6024 813
23-64-275	STUD, Front Door Vent Wing Frame Adjusting	2	6023 264	---- ---	---- ---	6023 006
	STUD, Vent Wing Complete	2	6023 006	6023 006	6023 006	6023 006
	SCREW, w/WASHER, at Belt	2	---- ---	---- ---	6025 141	
23-64-278	GROMMET, Front Door Vent Wing Pivot Bracket Outer	2	1909 917	1909 917	1909 917	1751 492
23-64-279	WASHER or INSULATOR, Door Vent Wing Upper Pivot Plate Inner	2	---- ---	---- ---	---- ---	1751 489
23-64-280	FRAME, Quarter Window Opening					
	2D.	1	2243 012-3	2423 686-7	2526 886-7	
	4D. 6 Window Front	2	---- ---	---- ---	2484 546-7	
	Rear	2	---- ---	---- ---	2484 548-9	
	FRAME, Quarter Window Glass Upper					
	2D. HT.	1	---- ---	---- ---	---- ---	2492 026-7
	Cv. Cp.	1	---- ---	---- ---	---- ---	2481 338-9
	NUT	6	---- ---	---- ---	---- ---	⊟6024 319
23-64-281	REINFORCEMENT, Quarter Inside Panel Front Roller Track					
	Cv. Cp.	1	---- ---	2255 214-5		
	BRACE, Quarter Inside Panel Front Roller Track					
	2D. HT.	1	---- ---	---- ---	2527 004-5	
23-64-282	SLIDE, Quarter Window Track					
	2D. HT., except C-H	2	---- ---	---- ---	2520 662	
	SPRING NUT	2	---- ---	---- ---	6000 305	

TYPE LETTERS Indicate: V - Valiant, L - Dart, R - Belvedere, W - Coronet, P - Plymouth, D - Dodge, C - Chrysler, Y - Imperial

★Indicates use as required.
⊟Indicates parts not listed in any previous parts book.
Right and left part numbers are on same line, first number is right, second number is left.
* Indicates change or addition.

Printed in U.S.A.
Prices and specifications subject to change without notice.
March 1966 Supersedes May 1965.

MyMopar.com

CODE	PART NAME AND DESCRIPTION	PER CAR	VALIANT / DART	PLYMOUTH BELVEDERE / DODGE CORONET	PLYMOUTH FURY / DODGE POLARA / CHRYSLER	IMPERIAL
23-64-0	**WINDOW AND VENT WING - Cont'd**					
23-64-289	CLAMP, w/STUD, Quarter Window Glass to Lower Frame					
	Cv. Cp.	4	---- ---	2167 855		
23-64-290	SEAL, Quarter Window Opening to Drain Trough					
	2D.	2	---- ---	---- ---	2573 182	
23-64-291	ROLLER, Quarter Window Track Slide					
	2D. HT., except C-H	2	---- ---	---- ---	2520 676	
23-64-293	RETAINER, Quarter Window, at Belt					
	4D. 6 Window	2	---- ---	---- ---	2484 238	
23-64-297	SLEEVE NUT	★	2588 202	2588 202	2588 202	2588 202
23-64-299	TRACK, Quarter Window Roller					
	2D. HT.	1	---- ---	2481 574-5		
	Cv. Cp.	1	2425 916-7			
	Barracuda Front	1	2602 322-3			
	2D. HT., L Front	1	2253 954-5			
	2 D. H. T., except C-H Front	1	---- ---	---- ---	⊟2527 040-1	
	2 D. H. T., C-H Front	1	---- ---	---- ---	⊟2526 924-5	
	Cv. Cp. Front	1	---- ---	2253 964-5	2527 890-1	
	2 D. H. T., except C-H Rear	2	---- ---	---- ---	⊟2527 000	
	2 D. H. T., C-H Rear	1	---- ---	---- ---	⊟2526 904-5	
	Cv. Cp. Rear	2	---- ---	2253 959		
	TRACK, Quarter Window Glass Guide Rear					
	2D. H.T., Cv.Cp.	1	---- ---	---- ---	---- ---	2491 574-5
	SCREW, w/WASHER	★	6024 813	6024 813	6024 648	
	SPACER, Front	4	---- ---	6023 575		
23-64-300	SUPPORT, Quarter Window Roller Track Bracket					
	2D. HT., except C-H	2	---- ---	---- ---	2484 977	
	SCREW, w/WASHER	2	---- ---	---- ---	6024 648	
23-64-306	GLASS, Front Door Vent Wing (see Note 1)					
	All Clear	2	---- ---	2218 504		
	Tinted	2	---- ---	2218 505		
	GLASS, w/Lower PIVOT and BRACKET (see Note 1)					
	2D., 4D., Sta. Wgn., Clear	1	2216 660-1			
	Tinted	1	2216 662-3			
	2D. HT., Cv. Cp. Clear	1	2217 478-9			
	Tinted	1	2217 476-7			
	All Clear	1	---- ---	---- ---	2570 968-9	2218 226-7
	Tinted	1	---- ---	---- ---	2570 970-1	2218 228-9
	FRONT DOOR WINDOW					
23-64-308	GLASS, Front Door Window (see Note 1)					
	2D. Clear	2	2254 229	2166 888		
	Tinted	2	2254 230	2166 889		
	4D., Sta. Wgn., Clear	2	2254 232	2167 766		
	Tinted	2	2254 233	2167 767		
	GLASS (see Note 3)					
	2D. HT., Cv. Cp., Clear	1	---- ---	---- ---	---- ---	2217 956-7
	Tinted	1	---- ---	---- ---	---- ---	2217 958-9
	4D. HT. Clear	1	---- ---	---- ---	---- ---	2217 952-3
	Tinted	1	---- ---	---- ---	---- ---	2217 954-5

TYPE LETTERS Indicate: V - Valiant, L - Dart, R - Belvedere, W - Coronet, P - Plymouth, D - Dodge, C - Chrysler, Y - Imperial

★Indicates use as required.
⊟Indicates parts not listed in any previous parts book.
May 1965.

Printed in U.S.A.
Prices and specifications subject to change without notice.
Right and left part numbers are on same line, first number is right, second number is left.
* Indicates change or addition.

MyMopar.com

23-64-0 WINDOW AND VENT WING - Cont'd

CODE	PART NAME AND DESCRIPTION		PER CAR	VALIANT / DART	PLYMOUTH BELVEDERE / DODGE CORONET	PLYMOUTH FURY / DODGE POLARA / CHRYSLER	IMPERIAL
	FRONT DOOR WINDOW						
23-64-308	GLASS, w/Rear FRAME and WEATHERSTRIP (see Note 1)						
	2D. HT., Cv. Cp., except Barracuda	Clear	1	2217 264-5			
		Tinted	1	2217 262-3			
	V Barracuda	Clear	1	2570 548-9			
		Tinted	1	2570 550-1			
	GLASS, w/FRAME and Lower CHANNEL (see Note 1)						
	2D. HT.	Clear	1	---- ---	2218 946-7		
		Tinted	1	---- ---	2218 948-9		
	Cv. Cp.	Clear	1	---- ---	2167 844-5		
		Tinted	1	---- ---	2167 846-7		
	GLASS, w/Front FRAME (see Note 1)						
	2D.	Clear	1	---- ---	---- ---	2520 304-5	
		Tinted	1	---- ---	---- ---	2520 302-3	
	4D., Sta. Wgn.	Clear	1	---- ---	---- ---	2520 484-5	
		Tinted	1	---- ---	---- ---	2520 482-3	
	GLASS, w/Front and Rear FRAME (see Note 1)						
	2D. HT., except C-H,	Clear	1	---- ---	---- ---	2520 334-5	
		Tinted	1	---- ---	---- ---	2520 332-3	
	2D. HT., C-H	Clear	1	---- ---	---- ---	2520 322-3	
		Tinted	1	---- ---	---- ---	2520 320-1	
	Cv. Cp.	Clear	1	---- ---	---- ---	2520 758-9	
		Tinted	1	---- ---	---- ---	2520 756-7	
	4D. HT., P	Clear	1	---- ---	---- ---	2520 470-1	
		Tinted	1	---- ---	---- ---	2520 468-9	
	4 D. H. T., D, C	Clear	1	---- ---	---- ---	*2520 448-9	
		Tinted	1	---- ---	---- ---	2520 446-7	
	GLASS, w/FRAME and CHANNEL, Complete (see Note 1)						
	2D. HT., Cv. Cp.,	Clear	1	---- ---	---- ---	---- ---	2491 660-1
		Tinted	1	---- ---	---- ---	---- ---	2491 662-3
	4D. HT.	Clear	1	---- ---	---- ---	---- ---	2218 326-7
		Tinted	1	---- ---	---- ---	---- ---	2218 348-9
	GLASS (see Note 1)						
	REAR DOOR WINDOW						
	4D., Sta. Wgn.	Clear	2	2254 260	2167 817		
		Tinted	2	2254 261	2167 818		
		Stationary Clear	2	2254 264			
		Stationary Tinted	2	2254 265			
	4D., P	Clear	1	---- ---	---- ---	2491 494-5	
		Tinted	1	---- ---	---- ---	2491 496-7	
	4 D., D, C	Clear	1	---- ---	---- ---	*2492 760-1	
		Tinted	1	---- ---	---- ---	2492 762-3	
	Sta. Wgn.	Clear	1	---- ---	---- ---	2492 048-9	
		Tinted	1	---- ---	---- ---	2492 050-1	
	GLASS (see Note 3)						
	4D. HT.	Clear	1	---- ---	---- ---	---- ---	2217 984-5
		Tinted	1	---- ---	---- ---	---- ---	2217 986-7
	GLASS, w/FRAME and CHANNEL, Complete (see Note 1)						
	4D. HT., P	Clear	1	---- ---	---- ---	2570 074-5	
		Tinted	1	---- ---	---- ---	2570 076-7	
	4 D. H. T., D, C	Clear	1	---- ---	---- ---	*2570 086-7	*2218 328-9
		Tinted	1	---- ---	---- ---	2570 088-9	2492 094-5

TYPE LETTERS Indicate: V - Valiant, L - Dart, R - Belvedere, W - Coronet, P - Plymouth, D - Dodge, C - Chrysler, Y - Imperial

★Indicates use as required.
⊟Indicates parts not listed in any previous parts book.
Right and left part numbers are on same line, first number is right, second number is left.
* Indicates change or addition.

Printed in U.S.A.
Prices and specifications subject to change without notice.
May 1965.

MyMopar.com

23-64-0 WINDOW AND VENT WING - Cont'd

CODE	PART NAME AND DESCRIPTION		PER CAR	VALIANT / DART	PLYMOUTH BELVEDERE / DODGE CORONET	PLYMOUTH FURY / DODGE POLARA / CHRYSLER	IMPERIAL
	QUARTER WINDOW						
23-64-311	GLASS, Quarter Window (see Note 1)						
	2D.	Clear, Right	1	2242 734	2244 101	2482 002	
		Clear, Left	1	2242 734	2244 101	2482 003	
		Tinted, Right	1	2242 735	2244 102	2484 334	
		Tinted, Left	1	2242 735	2244 102	2484 335	
	2D. HT., L	Clear	2	2243 788			
		Tinted	2	2243 789			
	V Barracuda	Clear	2	2484 678			
		Tinted	2	2484 679			
	4D. 6 Window	Clear	1	---- ---	---- ---	2482 008-9	
		Tinted	1	---- ---	---- ---	2484 336-7	
	Sta. Wgn.	Clear	1	2243 236-7	2251 220-1	2481 642-3	
		Tinted	1	2243 238-9	2251 222-3	2484 236-7	
	GLASS (see Note 3)						
	2D. HT.	Clear	1	---- ---	---- ---	---- ---	2491 080-1
		Tinted	1	---- ---	---- ---	---- ---	2491 082-3
	Cv. Cp.	Clear	1	---- ---	---- ---	---- ---	2424 700-1
		Tinted	1	---- ---	---- ---	---- ---	2424 702-3
	GLASS, w/Front FRAME (see Note 1)						
	Cv. Cp.	Clear	2	2424 656			
		Tinted	2	2424 657			
	2D. HT.	Clear	1	---- ---	2480 868-9		
		Tinted	1	---- ---	2480 870-1		
	Cv. Cp.	Clear	1	---- ---	2245 048-9		
		Tinted	1	---- ---	2245 050-1		
	GLASS, w/Lower CHANNEL (see Note 1)						
	2D. HT., V except Barracuda						
		Clear	1	2245 070-1			
		Tinted	1	2245 072-3			
	GLASS, w/FRAME and Lower CHANNEL, Complete (see Note 1)						
	2D. H.T., except C-H						
		Clear	1	---- ---	---- ---	2526 616-7	
		Tinted	1	---- ---	---- ---	2526 618-9	
	2D. HT., C-H	Clear	1	---- ---	---- ---	2483 930-1	2491 076-7
		Tinted	1	---- ---	---- ---	2483 932-3	2491 078-9
	Cv. Cp.	Clear	1	---- ---	---- ---	2529 082-3	2480 958-9
		Tinted	1	---- ---	---- ---	2529 084-5	2480 960-1
	REAR WINDOW						
23-64-314	GLASS, Rear Window (see Note 2)						
	2D., 4D., V	Clear	1	2242 370	2424 536		
		Tinted	1	2242 371	2424 537		
	2D. HT., V except Barracuda						
		Clear	1	2242 370	2424 538		
		Tinted	1	2242 371	2424 539		
	V Barracuda	Tinted	1	2484 573			
	2D., 2D. HT., 4D., L,	Clear	1	2480 708			
		Tinted	1	2481 027			
	2D., 4D., 4D. HT., P,	Clear	1	---- ---	---- ---	2481 440	
		Tinted	1	---- ---	---- ---	2481 441	
	4 D., D, C	Clear	1	---- ---	---- ---	*2482 300	
		Tinted	1	---- ---	---- ---	2482 301	
	4 D. H. T., D, C	Clear	1	---- ---	---- ---	*2481 443	
		Tinted	1	---- ---	---- ---	2481 444	
	2D. HT., except C-H,	Clear	1	---- ---	---- ---	2481 445	
		Tinted	1	---- ---	---- ---	2481 446	

TYPE LETTERS Indicate: V - Valiant, L - Dart, R - Belvedere, W - Coronet, P - Plymouth, D - Dodge, C - Chrysler, Y - Imperial

★Indicates use as required.
⊟Indicates parts not listed in any previous parts book.

Printed in U.S.A.
Prices and specifications subject to change without notice.
Right and left part numbers are on same line, first number is right, second number is left.

MyMopar.com

CODE	PART NAME AND DESCRIPTION		PER CAR	VALIANT / DART	PLYMOUTH BELVEDERE / DODGE CORONET	PLYMOUTH FURY / DODGE POLARA / CHRYSLER	IMPERIAL
23-64-0	**WINDOW AND VENT WING - Cont'd**						
	REAR WINDOW						
23-64-314	GLASS, Rear Window (see Note 2) - Cont'd						
	2D. HT., C-H	Clear	1	---- ---	---- ---	2481 443	
		Tinted	1	---- ---	---- ---	2481 444	
	GLASS (see Note 3)						
	2D. HT.	Clear	1	---- ---	---- ---	---- ---	2422 264
		Tinted	1	---- ---	---- ---	---- ---	2422 265
	4D. HT., Y-M	Clear	1	---- ---	---- ---	---- ---	2422 255
		Tinted	1	---- ---	---- ---	---- ---	2422 258
	4D. HT., Y-H	Clear	1	---- ---	---- ---	---- ---	2422 264
		Tinted	1	---- ---	---- ---	---- ---	2422 265
23-66-0	**WINDSHIELD**						
23-66-65	FRAME, Windshield Opening Upper						
	Cv. Cp.		1	2255 832	2493 310	2493 829	
	Cv. Cp.	Outer	1	---- ---	---- ---	*2481 847	
	Except Cv. Cp.	Center	1	---- ---	2425 763	2493 801	
	Except Cv. Cp.	End	1	---- ---	2218 574-5		
	EXTENSION, Windshield Upper Frame						
	2D., 4D., Sta. Wgn.		1	---- ---	---- ---	2491 112-3	
	4D. HT., P		1	---- ---	---- ---	2491 112-3	
	4 D. H. T., D, C		1	---- ---	---- ---	2491 772-3	
	2D. HT., Cv. Cp.		1	---- ---	---- ---	2491 772-3	
23-66-77	REINFORCEMENT, Windshield Opening Upper Frame						
	Cv. Cp.		1	2255 823			
	REINFORCEMENT, Windshield Opening Upper Frame to Front Upper Pillar						
	Except Cv. Cp.		1	2588 146-7			
	REINFORCEMENT, Windshield Upper Frame						
	Cv. Cp.		1	---- ---	2480 156		
	Except Cv. Cp.	End	1	---- ---	2218 584-5		
23-66-135	GLASS, Windshield (see Note 2)						
	All	Clear	1	2242 368	2218 626		
		Tinted	1	2242 369	2218 630		
	2D., 4D., Sta. Wgn.,	Clear	1	---- ---	---- ---	2492 096	
		Tinted	1	---- ---	---- ---	2492 097	
	2D. HT., Cv. Cp.,	Clear	1	---- ---	---- ---	2491 168	
		Tinted	1	---- ---	---- ---	2491 169	
	4D. HT., P	Clear	1	---- ---	---- ---	2492 096	
		Tinted	1	---- ---	---- ---	2492 097	
	4 D. H. T., D, C	Clear	1	---- ---	---- ---	2491 168	
		Tinted	1	---- ---	---- ---	2491 169	
	GLASS (see Note 3)						
	Except Cv. Cp.	Clear	1	---- ---	---- ---	---- ---	2422 242
		Tinted	1	---- ---	---- ---	---- ---	2422 246
	Cv. Cp.	Clear	1	---- ---	---- ---	---- ---	1651 431
		Tinted	1	---- ---	---- ---	---- ---	1690 871
23-66-235	WEATHERSTRIP, Windshield Glass						
	Except Cv. Cp.	w/o Vinyl Roof	1	2242 450			
	2D. HT., V	w/Vinyl Roof	1	2218 960			
	Cv. Cp.		1	2424 392			

NOTE 2: PLACE ORDERS DIRECT WITH YOUR CHRYSLER SAFEGUARD DISTRIBUTORS.

NOTE 3: PLACE ORDERS DIRECT WITH YOUR LOCAL GLASS SOURCE.

TYPE LETTERS Indicate: V - Valiant, L - Dart, R - Belvedere, W - Coronet, P - Plymouth, D - Dodge, C - Chrysler, Y - Imperial

★Indicates use as required.
⊟Indicates parts not listed in any previous parts book.
Right and left part numbers are on same line, first number is right, second number is left.
* Indicates change or addition.

Printed in U.S.A.
Prices and specifications subject to change without notice.
March 1966 Supersedes May 1965.

MyMopar.com

CODE	PART NAME AND DESCRIPTION	PER CAR	VALIANT / DART	PLYMOUTH BELVEDERE / DODGE CORONET	PLYMOUTH FURY / DODGE POLARA / CHRYSLER	IMPERIAL
23-66-0	**WINDSHIELD - Cont'd**					
23-66-235	WEATHERSTRIP - Cont'd					
	Except Cv. Cp.	1	---- ---	2218 634		
	Cv. Cp.	1	---- ---	2482 893		
	2 D., 4 D. 4 Window	1	---- ---	---- ---	2571 662	
	Cv. Cp.	1	---- ---	---- ---	2571 663	
	4 D. H. T., P	1	---- ---	---- ---	2571 662	
	4 D. H. T., D, C w/o Vinyl Roof	1	---- ---	---- ---	2571 663	
	4 D. 6 Window, Sta. Wgn. w/o Vinyl Roof	1	---- ---	---- ---	2571 662	
	4 D. 6 Window, Sta. Wgn. w/Vinyl Roof.	1	---- ---	---- ---	*2664 568	
	2 D. H. T. w/o Vinyl Roof	1	---- ---	---- ---	2571 663	
	2 D. H. T. w/Vinyl Roof.	1	---- ---	---- ---	*2664 569	
	4 D. H. T., C-L, C-M, C-P w/Vinyl Roof.	1	---- ---	---- ---	*2664 568	
	All	1	---- ---	---- ---	---- ---	2093 638
23-66-239	LOCKINGSTRIP, Windshield Glass Weatherstrip	1	2082 278			
23-67-0	**WINDSHIELD WIPER**					
23-67-2	CAM PACKAGE, Motor Parking Variable Speed	1	2525 346	---- ---	2525 346	
	NOTE: For Single Speed Motor see Part Type Code 23-67-132.					
23-67-5	ARM, Wiper, w/o Blade					
	Right	1	2580 422	2580 420		
	Left	1	2580 422	2580 421		
	P, D	1	---- ---	---- ---	2580 424-5	
	C	1	---- ---	---- ---	2580 426-7	2580 428-9
23-67-10	GEAR and GASKET PACKAGE, Motor					
	Single Speed					
	w/Prestolite Motor	1	2448 282	---- ---	2584 978	
	w/General Industries Motor	1	---- ---	2448 264		
	w/Leece Neville Motor . .	1	---- ---	2448 608		
	Variable Speed					
	w/Prestolite Motor . . .	1	2448 282	---- ---	2584 976	1879 598
	w/General Industries Motor	1	---- ---	2448 267		
	w/Leece Neville Motor . .	1	---- ---	2495 548	2585 043	
23-67-16	BRUSH and SPRING PACKAGE, Motor					
	Single Speed					
	w/Prestolite Motor . . .	1	1752 518	---- ---	2584 980	
	w/General Industries Motor	1	---- ---	2084 269		
	w/Leece Neville Motor . .	1	---- ---	2448 606		
	Variable Speed					
	w/Prestolite Motor	1	1752 518	---- ---	2585 025	1627 273
	w/General Industries Motor	1	---- ---	2448 265		
	w/Leece Neville Motor . .	1	---- ---	2525 250	2585 045	
23-67-18	BRACKET, Motor Mounting					
	Single Speed	1	---- ---	2427 571		
	Variable Speed	1	---- ---	2427 570	---- ---	1838 289
23-67-20	GROMMET PACKAGE, Motor Mounting	1	2421 482	---- ---	2421 482	
	GROMMET, Motor Mounting	3	---- ---	1594 992	---- ---	1594 992

TYPE LETTERS Indicate: V - Valiant, L - Dart, R - Belvedere, W - Coronet, P - Plymouth, D - Dodge, C - Chrysler, Y - Imperial

★Indicates use as required.
⊟Indicates parts not listed in any previous parts book.
March 1966 Supersedes May 1965.

Printed in U.S.A.
Prices and specifications subject to change without notice.
Right and left part numbers are on same line, first number is right, second number is left.
* Indicates change or addition.

MyMopar.com

CODE	PART NAME AND DESCRIPTION	PER CAR	VALIANT / DART	PLYMOUTH BELVEDERE / DODGE CORONET	PLYMOUTH FURY / DODGE POLARA / CHRYSLER	IMPERIAL
23-67-0	**WINDSHIELD WIPER - Cont'd**					
23-67-25	BLADE, Wiper, w/REFILL					
	Right	1	2580 415	2580 416	2580 419	2580 418
	Left	1	2580 415	2580 417	2580 419	2580 419
	REFILL	2	2291 909	2426 255	2427 671	2427 671
23-67-46	COVER, Wiper Pivot Hole	2	---- ---	---- ---	2588 152	
23-67-48	ADAPTOR, Wiper Pivot Mounting	1	---- ---	---- ---	---- ---	1704 062-3
23-67-49	GASKET, Wiper Pivot Mounting	4	---- ---	---- ---	---- ---	1704 066
23-67-50	NUT, Wiper Pivot Mounting	2	---- ---	---- ---	---- ---	2580 647
23-67-76	ARM, Wiper Crank					
	Single Speed	1	---- ---	2427 576	2496 157	
	Variable Speed	1	---- ---	2427 575	2496 114	2427 923
23-67-79	LINK, Wiper					
	Right	1	---- ---	2427 584	---- ---	1841 679
	Left	1	---- ---	2427 585	---- ---	2198 099
	LINK, Drive	1	2496 140	---- ---	2496 124	
	LINK, Pivot Connecting	1	2496 139	---- ---	2496 125	
23-67-80	RETAINER, Link					
	Drive Link	2	*2580 929			
	Connecting Link to Pivot	2	*2580 929	---- ---	*2580 929	
	Drive Link to Crank	1	---- ---	---- ---	2580 929	
	Drive Link to Left Pivot	1	---- ---	---- ---	*2580 929	
	Link to Pivot	2	---- ---	1605 299	---- ---	1605 299
	Link to Crank Arm 1" x 1" x 3/64"	1	---- ---	1886 202	---- ---	1886 202
	11/16" x 1/2" x 1/4"	1	---- ---	*2580 929	---- ---	*2580 929
23-67-82	WASHER, Link					
	Felt	★	1540 383	---- ---	1540 383	
	Steel	★	1770 289	1770 289	---- ---	1770 289
	Brass	★	1622 352	1605 604	1622 352	1605 604
	SPRING WASHER	★	1770 290	1770 290	2580 944	1770 290
23-67-83	BUSHING, Wiper Link to Crank Arm					
	Single Speed	2	---- ---	2427 573		
23-67-85	GASKET, Wiper Pivot Mounting	2	2258 455	2258 455		
23-67-86	PIVOT					
	Right	1	2580 644	2580 643	2496 122	2580 648
	Left	1	2580 645	2580 643	2496 121	2580 649
23-67-91	SCREW, w/WASHER, Wiper Pivot Mounting	4	---- ---	---- ---	---- ---	1704 061
23-67-95	NUT, Wiper Pivot Mounting	2	---- ---	---- ---	---- ---	2580 647
	NUT, w/WASHER	4	---- ---	2076 232		
23-67-98	MOTOR					
	Single Speed	1	2525 270	2495 200	2496 150	
	Variable Speed	1	2525 269	2448 849	2584 975	2448 844
23-67-100	SPACER, Motor Mounting to Bracket	3	---- ---	1594 995	---- ---	1594 995
23-67-102	WASHER, Motor Mounting to Bracket	3	---- ---	1594 993	---- ---	1594 993
23-67-104	SEAL, Motor Mounting	1	---- ---	---- ---	2496 120	
	SEAL, Wiper Parking Mechanism Variable Speed	1	---- ---	---- ---	2496 127	

TYPE LETTERS Indicate: V - Valiant, L - Dart, R - Belvedere, W - Coronet, P - Plymouth, D - Dodge, C - Chrysler, Y - Imperial

★Indicates use as required.

⊟Indicates parts not listed in any previous parts book.

Right and left part numbers are on same line, first number is right, second number is left.

• Indicates change or addition.

Printed in U.S.A.

Prices and specifications subject to change without notice.

March 1966 Supersedes May 1965.

MyMopar.com

CODE	PART NAME AND DESCRIPTION	PER CAR	VALIANT / DART	PLYMOUTH BELVEDERE / DODGE CORONET	PLYMOUTH FURY / DODGE POLARA / CHRYSLER	IMPERIAL
23-67-0	**WINDSHIELD WIPER - Cont'd**					
23-67-119	HOLDER, Motor Brush					
	Single Speed w/General Industries Motor	1	---- ---	1495 160		
	w/Leece Neville Motor . .	1	---- ---	2448 609		
	Variable Speed					
	w/General Industries Motor	2	---- ---	1571 034		
	w/Leece Neville Motor . .	1	---- ---	2495 547	2585 042	
23-67-129	REINFORCEMENT, Motor Mounting	1	---- ---	---- ---	---- ---	1846 350
23-67-132	BUSHING, Drive Link to Motor End					
	Single Speed	1	2291 853			
	To Crank Arm Single Speed	1	---- ---	---- ---	2580 200	
23-67-160	SWITCH					
	Single Speed, w/o Washers					
	P, C	1	*2497 282	*2497 282	*2497 282	
	D	1	---- ---	---- ---	2580 190	
	Single Speed, w/Washers					
	P, C	1	2497 282	2497 282	2497 282	
	D	1	---- ---	---- ---	2497 635	
	Variable Speed					
	P	1	2497 112	2497 421	2497 802	
	D	1	---- ---	---- ---	2497 634	
	C	1	---- ---	---- ---	2497 802	2497 690
23-67-161	NUT, Switch Mounting					
	V, R, C	1	1887 603	1887 603	6008 060	6008 060
23-67-163	DISCONNECT, w/WIRING, Wiper	1	---- ---	---- ---	2580 114	
23-67-164	PLATE and GASKET PACKAGE, Motor Switch					
	Single Speed					
	w/Prestolite Motor	1	2448 283	---- ---	2584 979	
	w/General Industries Motor	1	---- ---	2448 263		
	w/Leece Neville Motor . .	1	---- ---	2448 607		
	Variable Speed					
	w/Prestolite Motor	1	2448 284	---- ---	2584 977	2298 876
	w/General Industries Motor	1	---- ---	2448 266		
	w/Leece Neville Motor . .	1	---- ---	2495 549	2585 044	
23-67-166	TERMINAL, Motor Parking Switch					
	Variable Speed	2	---- ---	---- ---	2631 326	
23-67-194	KNOB, Switch					
	V, R, P	1	2497 269	2497 269	2580 157	
	L, W, D	1	2496 788	2496 788	2496 788	
	C	1	---- ---	---- ---	2496 515	2426 651
23-67-195	BEZEL, Switch					
	V, R	1	1887 602	1887 602		
	W	1	---- ---	2497 377		
	BEZEL, Switch Mounting					
	L, W	1	2497 250	2497 250		
	D	1	---- ---	---- ---	2497 250	
	P	1	---- ---	---- ---	2496 760	
	C	1	---- ---	---- ---	⊟2497 619	
23-67-200	RETAINER, Wiper Parking Mechanism					
	Variable Speed	1	---- ---	---- ---	2497 597	
23-67-201	COVER, Wiper Parking Mechanism					
	Variable Speed	1	---- ---	---- ---	2496 112	

TYPE LETTERS Indicate: V - Valiant, L - Dart, R - Belvedere, W - Coronet, P - Plymouth, D - Dodge, C - Chrysler, Y - Imperial

★Indicates use as required.
⊟Indicates parts not listed in any previous parts book.
March 1966 Supersedes May 1965.

Printed in U.S.A.
Prices and specifications subject to change without notice.
Right and left part numbers are on same line, first number is right, second number is left.
• Indicates change or addition.

MyMopar.com

CODE	PART NAME AND DESCRIPTION	PER CAR	VALIANT / DART	PLYMOUTH BELVEDERE / DODGE CORONET	PLYMOUTH FURY / DODGE POLARA / CHRYSLER	IMPERIAL
23-67-0	**WINDSHIELD WIPER - Cont'd**					
23-67-202	SPRING, Wiper Parking Variable Speed	2	---- ---	2427 917	---- ---	2427 917
23-67-203	SPRING-TRIP, Wiper Parking Variable Speed	2	---- ---	1753 712	---- ---	1753 712
23-67-204	CAM, Wiper Parking Variable Speed	2	---- ---	2496 861	---- ---	2496 861
23-67-206	RELEASE, Wiper Parking Cam Variable Speed	1	---- ---	---- ---	2497 561	

NOTES

TYPE LETTERS Indicate: V - Valiant, L - Dart, R - Belvedere, W - Coronet, P - Plymouth, D - Dodge, C - Chrysler, Y - Imperial

★Indicates use as required.
⊟Indicates parts not listed in any previous parts book.
Right and left part numbers are on same line, first number is right, second number is left.
* Indicates change or addition.

Printed in U.S.A.
Prices and specifications subject to change without notice.
May 1965.

MyMopar.com

CODE	PART NAME AND DESCRIPTION	PER CAR	VALIANT / DART	PLYMOUTH BELVEDERE / DODGE CORONET	PLYMOUTH FURY / DODGE POLARA / CHRYSLER	IMPERIAL

NOTES

TYPE LETTERS Indicate: V - Valiant, L - Dart, R - Belvedere, W - Coronet, P - Plymouth, D - Dodge, C - Chrysler, Y - Imperial

★Indicates use as required.

⊟Indicates parts not listed in any previous parts book.

Printed in U.S.A.

Prices and specifications subject to change without notice.

Right and left part numbers are on same line, first number is right, second number is left.

* Indicates change or addition.

MyMopar.com

A SERIES
TRIM AND TRIM INDEX
1965
PASSENGER CAR

PARTS DIVISION CHRYSLER MOTORS CORPORATION

LOOSE-LEAF PARTS CATALOG

MyMopar.com

2nd REVISION 81-690-0637

SUPERSEDES 81-690-0540

MyMopar.com

1965 PLYMOUTH

INTERIOR TRIM

HOW TO USE INTERIOR TRIM ILLUSTRATIONS

The illustrations in this section are actual and each body style showing the Interior Trim is included.

The letters shown on the illustration indicate the description of the part and the part type code when referred to the legend which appears preceding the listing of the parts. The letters are consistent throughout the illustrations as "A" is always a Door Trim Panel, Code 23-92-5.

The numbers on the illustration indicate the distribution of material and type of material used. The numbers may vary with each illustration. The legend appears on the illustration.

Appearing throughout this section are part numbers containing both letters and numbers. These are good serviceable part numbers. The combination of letters and numbers merely indicates the parts are keyed to the interior color of the vehicles on which they are used.

For complete information on "How to Order" Trim Parts, see Master Parts Price List.

MyMopar.com

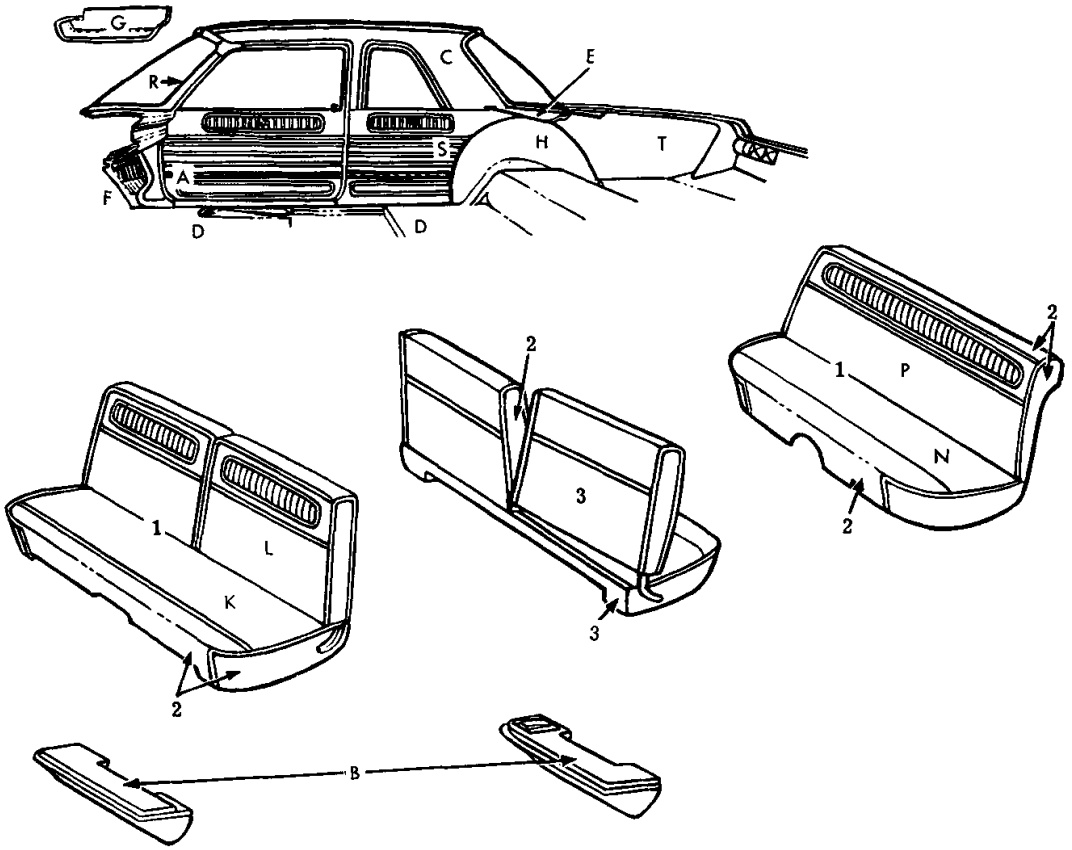

19T0181 A

ITEM	TYPE OF MATERIAL	PART TYPE CODE	MAT'L WIDTH	PART NUMBERS AND COLORS BLUE	RED	TAN	
1	Body Cloth	23-114-2	63"	0105 ABB	0105 ARR	0105 ATT	
2	Vinyl 35.5 oz.	23-114-15	54"	0441 AB4	0441 VR7	0441 VT6	
3	Vinyl 35.5 oz.	23-114-15	54"	0441 AB8	0441 VR7	0441 VT8	

Distribution Drawing Legend Page Appears Following Illustration Section

1965 PLYMOUTH P1-L, P2-L 2 DOOR SEDAN
CLOTH AND VINYL TRIM
CODES L1B, K1B, L1R, K1R, L1T, K1T

MyMopar.com

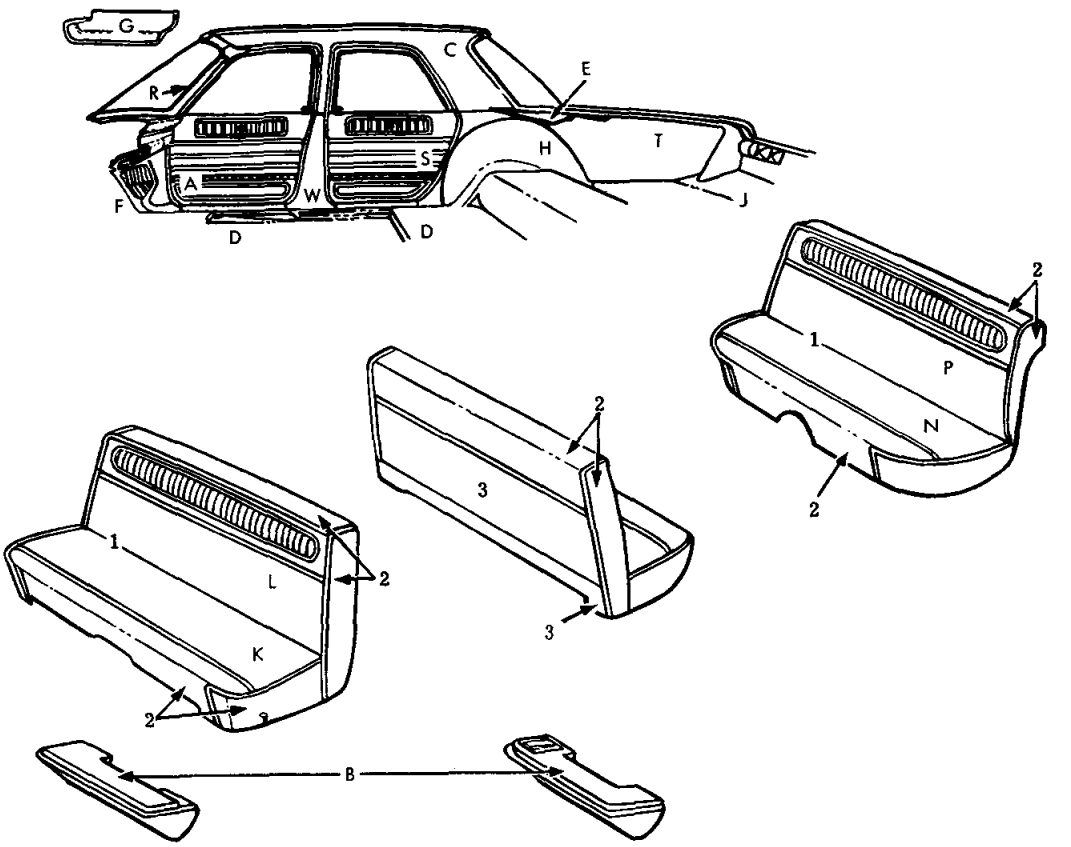

19T0182A

ITEM	TYPE OF MATERIAL	PART TYPE CODE	MAT'L WIDTH	PART NUMBERS AND COLORS BLUE	RED	TAN	
1	Body Cloth	23-114-2	63"	0105 ABB	0105 ARR	0105 ATT	
2	Vinyl 35.5 oz.	23-114-15	54"	0441 AB4	0441 VR7	0441 VT6	
3	Vinyl 35.5 oz.	23-114-15	54"	0441 AB8	0441 VR7	0441 VT8	

Distribution Drawing Legend Page Appears Following Illustration Section

1965 PLYMOUTH P1-L, P2-L 4 DOOR SEDAN
CLOTH AND VINYL TRIM
CODES L1B, K1B, L1R, K1R, L1T, K1T

★ Indicates use as required.
⊟ Indicates parts not listed in any previous parts book.
● Indicates change or addition.

Printed in U.S.A.
Prices and specifications subject to change without notice.
May 1965, Supersedes Sept. 4, 1964.

MyMopar.com

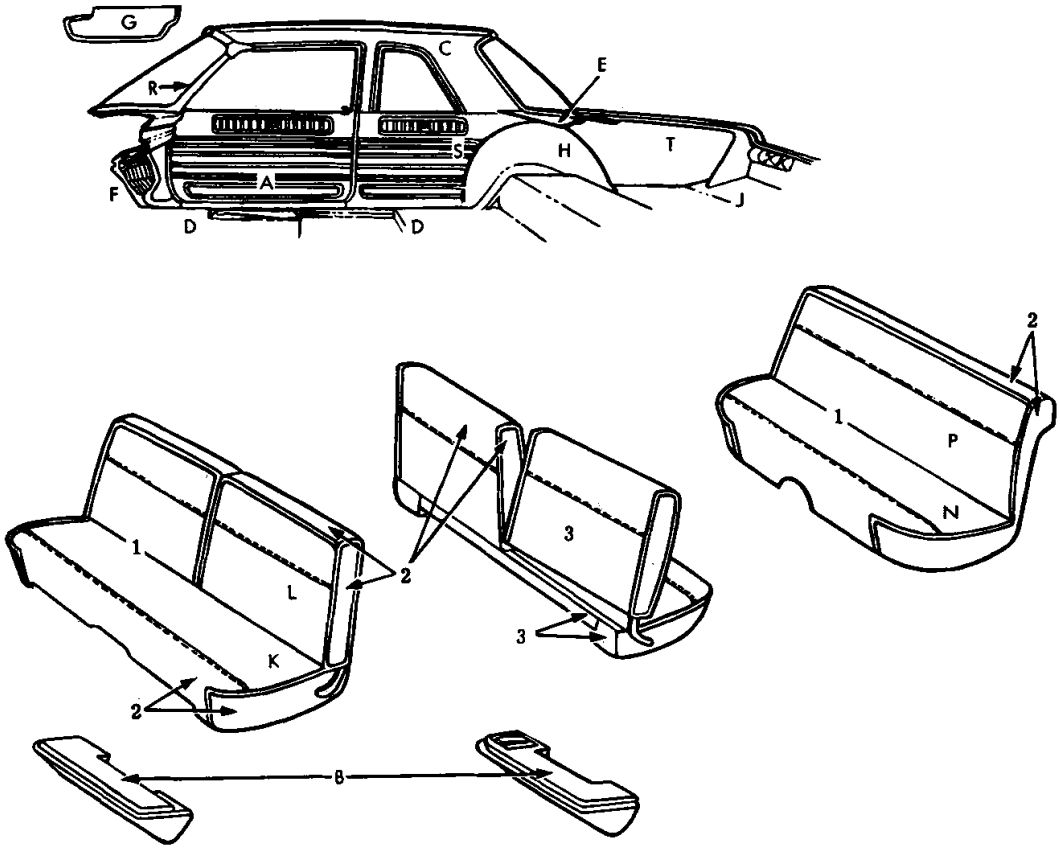

19T0183 A

ITEM	TYPE OF MATERIAL	PART TYPE CODE	MAT'L WIDTH	PART NUMBERS AND COLORS TAN			
1	Body Cloth	23-114-2	52"	0104 ATT			
2	Vinyl 35.5 oz.	23-114-15	54"	0441 VT6			
3	Vinyl 35.5 oz.	23-114-15	54"	0441 VT8			

Distribution Drawing Legend Page Appears Following Illustration Section

1965 PLYMOUTH P1-L, P2-L 2 DOOR SEDAN
CLOTH AND VINYL TRIM
CODES L2T, K2T

MyMopar.com

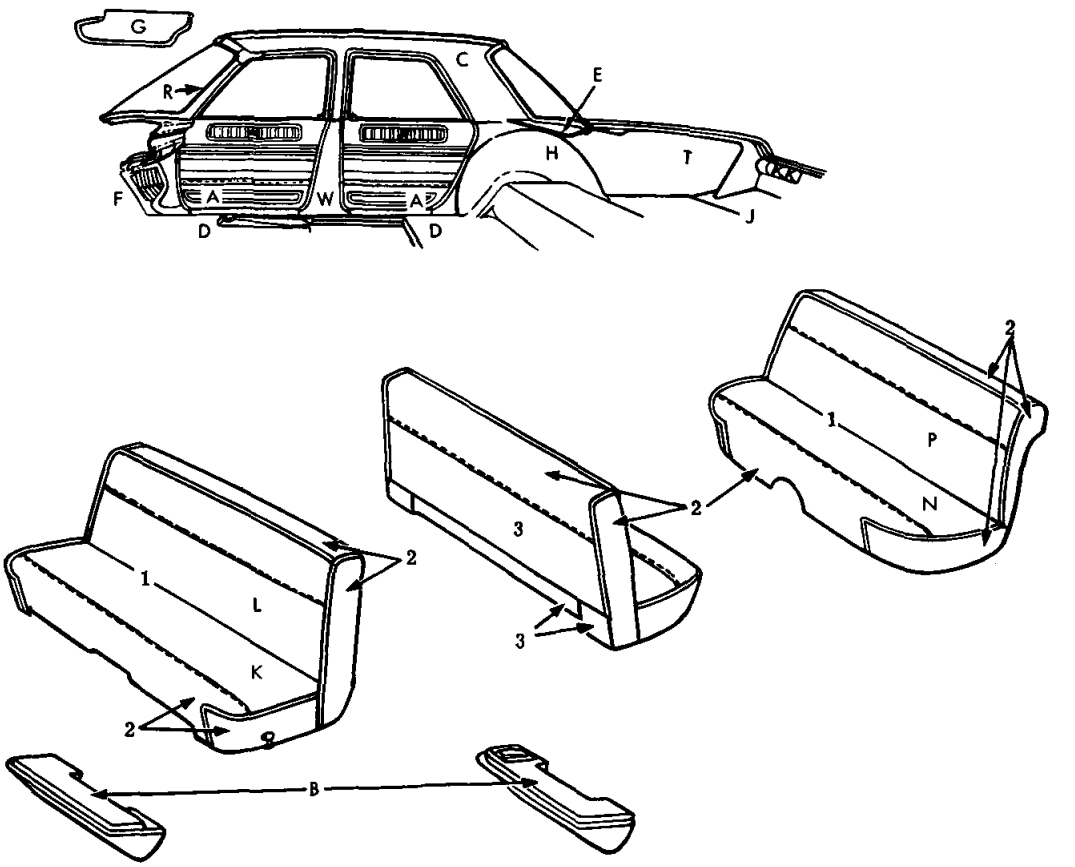

19T0184A

ITEM	TYPE OF MATERIAL	PART TYPE CODE	MAT'L WIDTH	PART NUMBERS AND COLORS TAN			
1	Body Cloth	23-114-2	52"	0104 ATT			
2	Vinyl 35.5 oz.	23-114-15	54"	0441 VT6			
3	Vinyl 35.5 oz.	23-114-15	54"	0441 VT8			

Distribution Drawing Legend Page Appears Following Illustration Section

1965 PLYMOUTH P1-L, P2-L 4 DOOR SEDAN
CLOTH AND VINYL TRIM
CODES L2T, K2T

★ Indicates use as required.
⊟ Indicates parts not listed in any previous parts book.
* Indicates change or addition.

Printed in U.S.A.
Prices and specifications subject to change without notice.
May 1965, Supersedes Sept. 4, 1964.

MyMopar.com

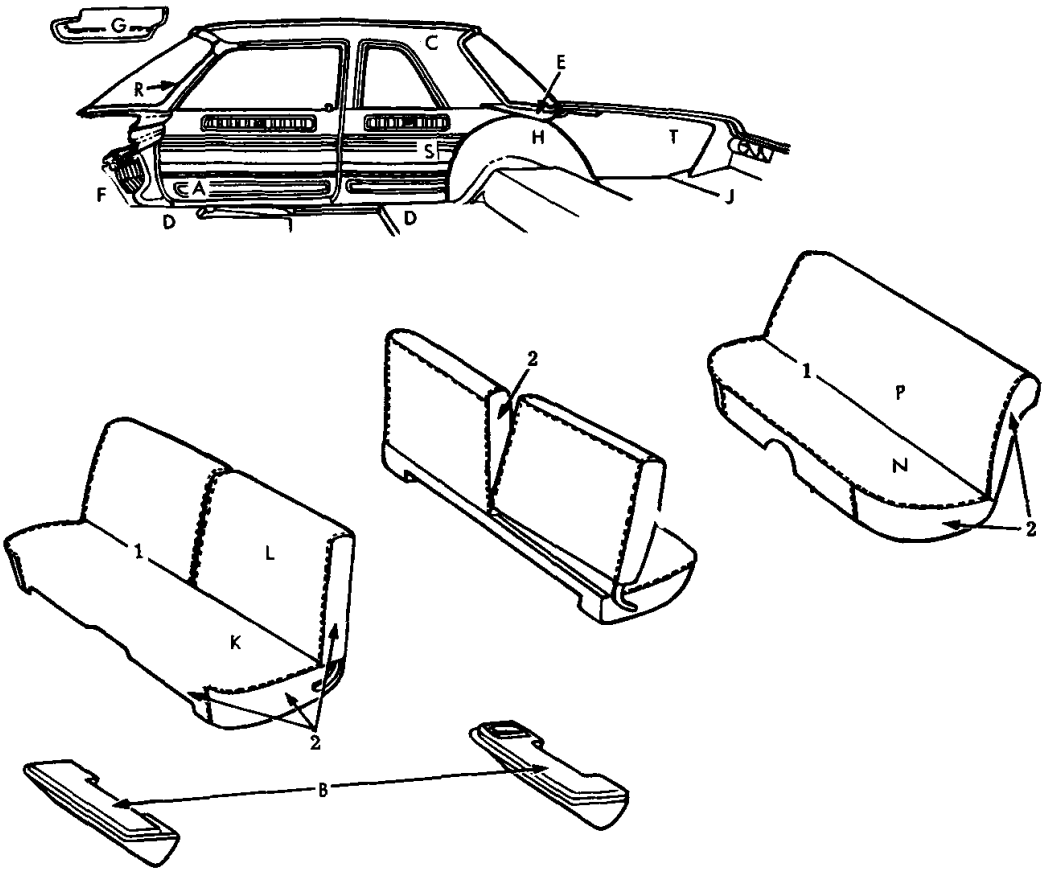

19T0185

ITEM	TYPE OF MATERIAL	PART TYPE CODE	MAT'L WIDTH	PART NUMBERS AND COLORS TAN			
1	Vinyl 37 oz.	23-114-15	50"	⊟0445 AT8			
2	Vinyl 35.5 oz.	23-114-15	54"	0441 VT8			

Distribution Drawing Legend Page Appears Following Illustration Section

1965 PLYMOUTH P1-L, P2-L 2 DOOR SEDAN
VINYL TRIM
CODES L8T, K8T

MyMopar.com

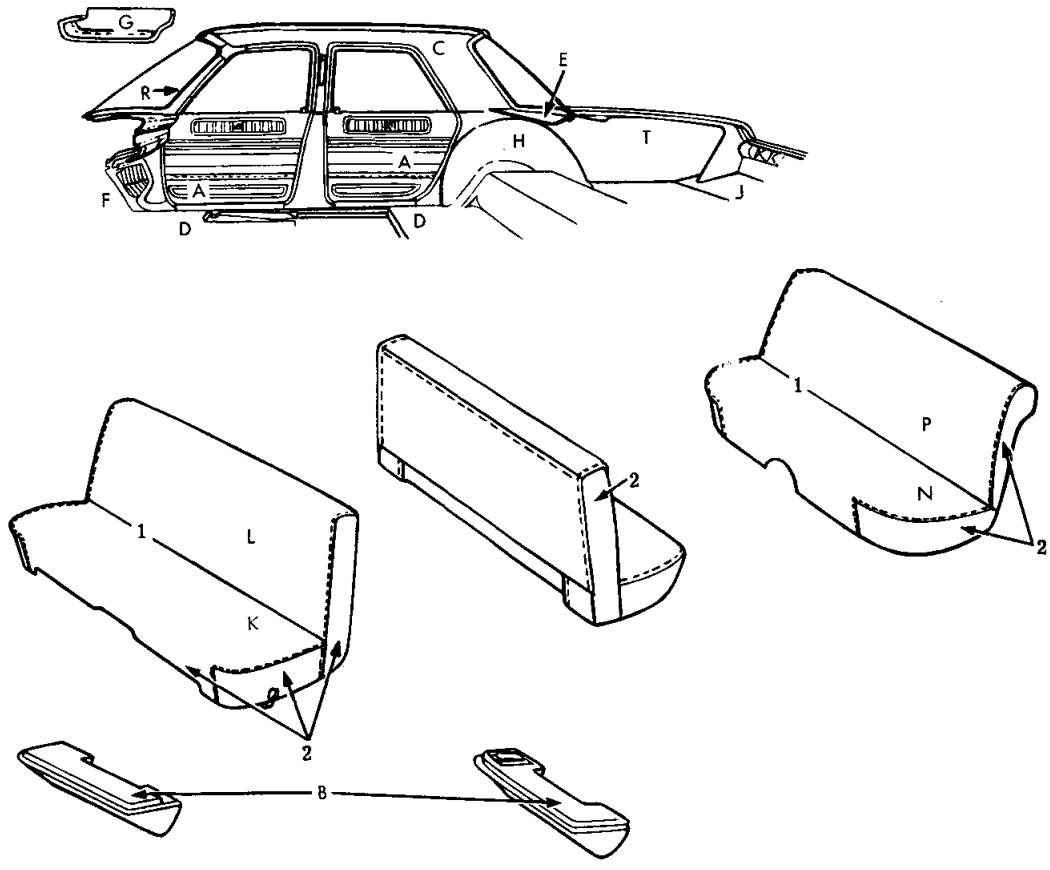

19T0186

ITEM	TYPE OF MATERIAL	PART TYPE CODE	MAT'L WIDTH	PART NUMBERS AND COLORS TAN			
1	Vinyl 37 oz.	23-114-15	50"	⊟0445 AT8			
2	Vinyl 35.5 oz.	23-114-15	54"	0441 VT8			

Distribution Drawing Legend Page Appears Following Illustration Section

1965 PLYMOUTH P1-L, P2-L 4 DOOR SEDAN
VINYL TRIM
CODES L8T, K8T, T8T

★ Indicates use as required.
⊟ Indicates parts not listed in any previous parts book.

Printed in U.S.A.
Prices and specifications subject to change without notice.
September 4, 1964.

MyMopar.com

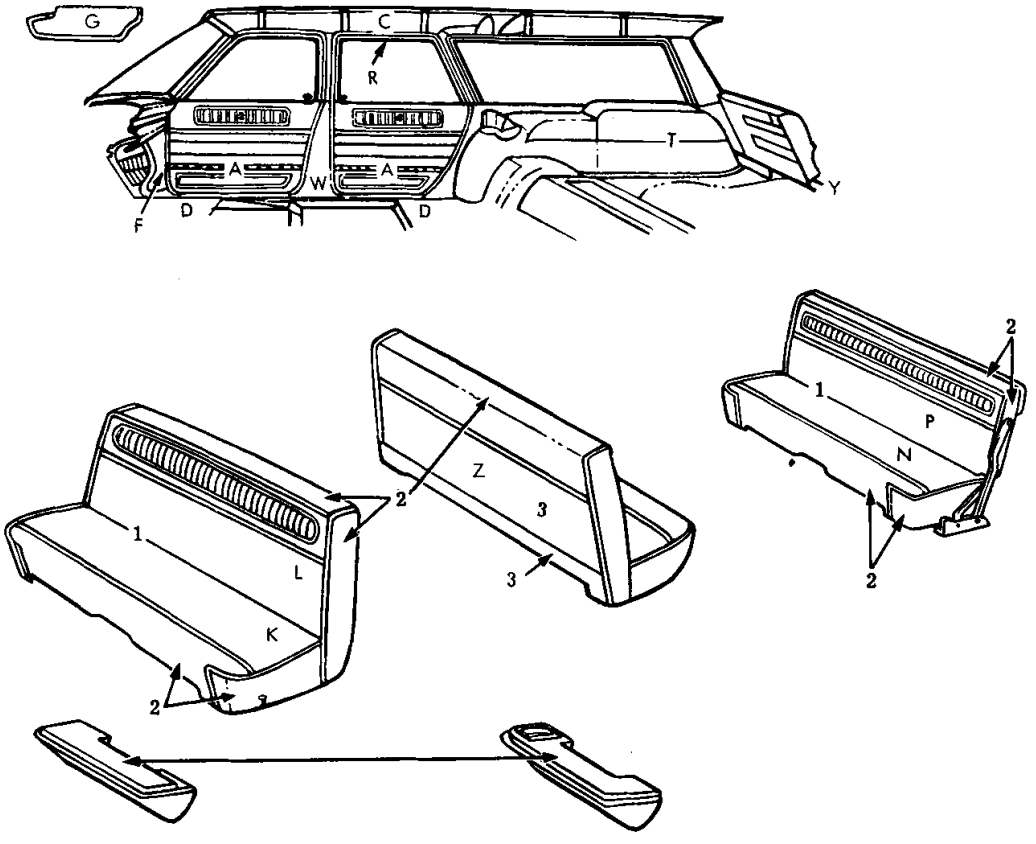

19T0187 A

ITEM	TYPE OF MATERIAL	PART TYPE CODE	MAT'L WIDTH	PART NUMBERS AND COLORS BLUE	RED	TAN	
1	Vinyl 41.5 oz.	23-114-15	59"	0471 AB8	0471 AR7	0471 AT8	
2	Vinyl 35.5 oz.	23-114-15	54"	0441 AB4	0441 VR7	0441 VT6	
3	Vinyl 35.5 oz.	23-114-15	54"	0441 AB8	0441 VR7	0441 VT8	

Distribution Drawing Legend Page Appears Following Illustration Section

1965 PLYMOUTH P1-L, P2-L STATION WAGON
VINYL TRIM
CODES L4B, K4B, L4R, K4R, L4T, K4T

★ Indicates use as required.
Ⓢ Indicates parts not listed in any previous parts book.
May 1965, Supersedes Sept. 4, 1964.

Printed in U.S.A.
Prices and specifications subject to change without notice.
• Indicates change or addition.

MyMopar.com

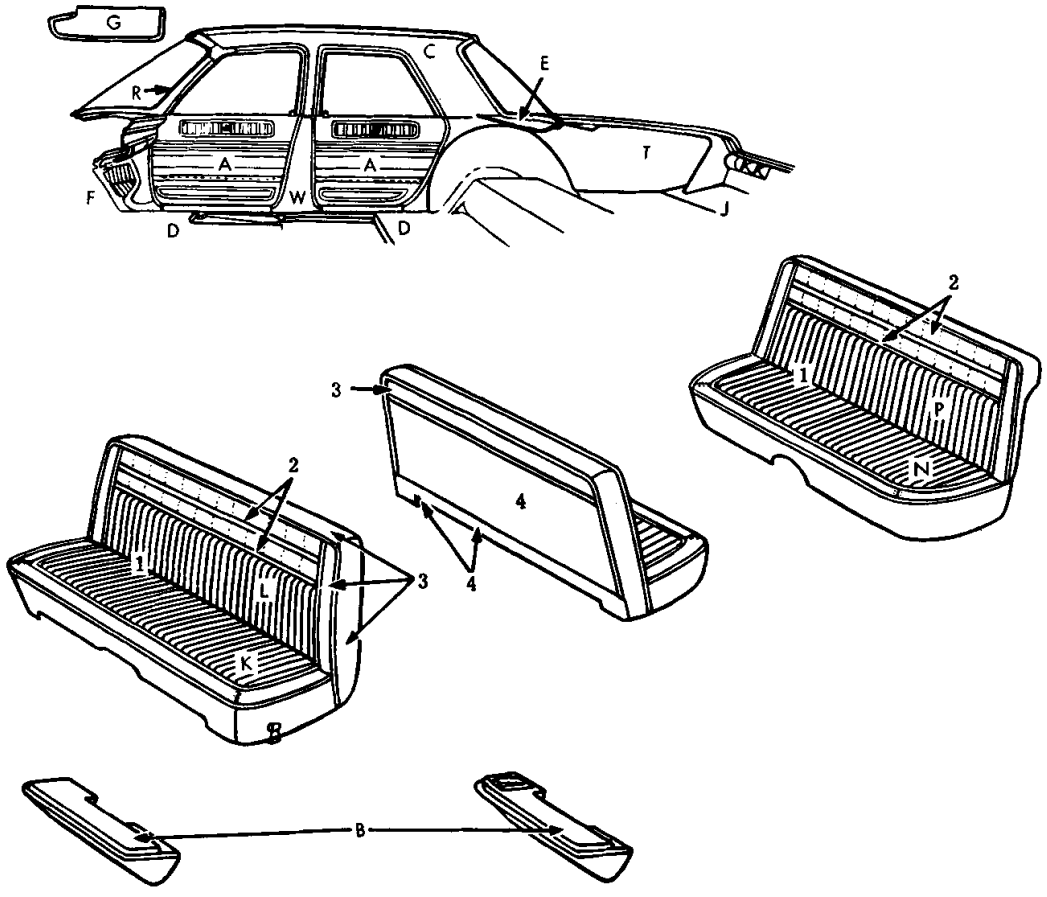

19T0188A

ITEM	TYPE OF MATERIAL	PART TYPE CODE	MAT'L WIDTH	PART NUMBERS AND COLORS BLUE	RED	TAN	
1	Vinyl	23-114-15		Not Serviced			
2	Vinyl	23-114-15		Not Serviced			
3	Vinyl 35.5 oz.	23-114-15	54"	0441 AB4	0441 VR7	0441 VT6	
4	Vinyl 35.5 oz.	23-114-15	54"	0441 AB8	0441 VR7	0441 VT8	

Distribution Drawing Legend Page Appears Following Illustration Section

1965 PLYMOUTH P1-L, P2-L 4 DOOR SEDAN
VINYL TRIM
CODES L5B, L5R, L5T

MyMopar.com

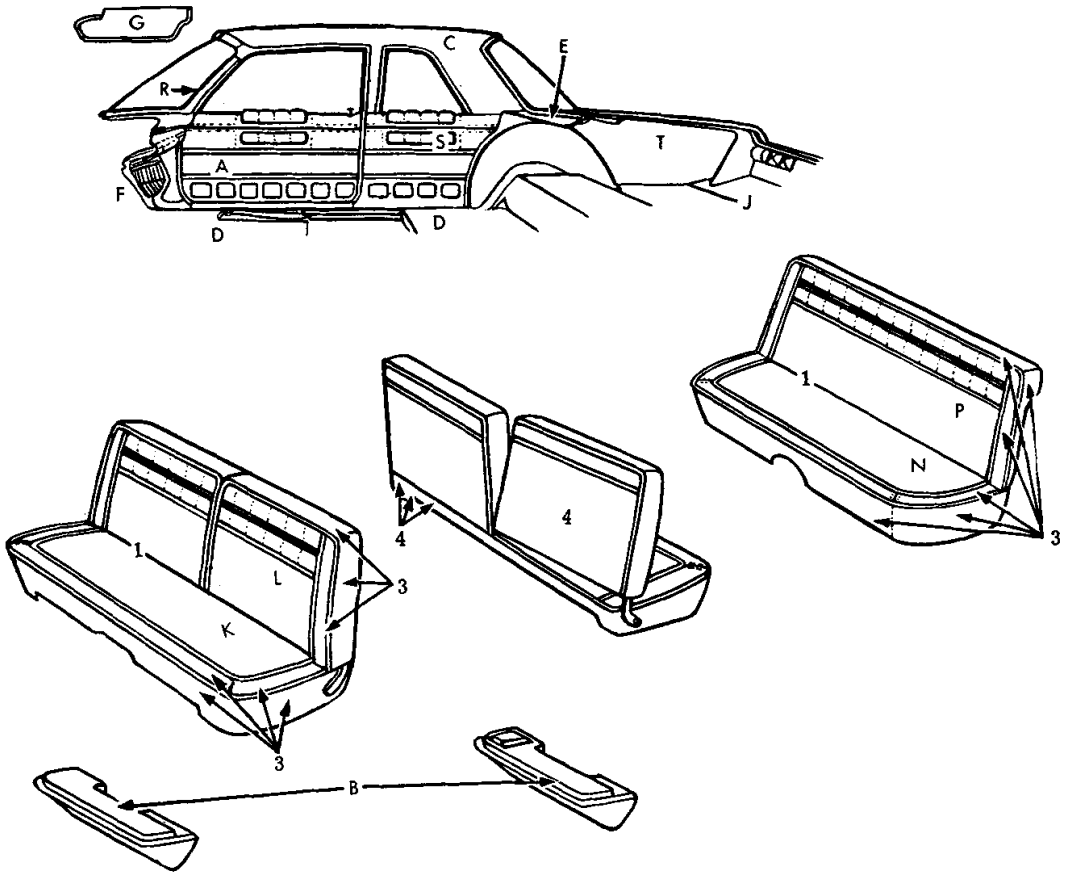

19T0189A

ITEM	TYPE OF MATERIAL	PART TYPE CODE	MAT'L WIDTH	PART NUMBERS AND COLORS BLUE	TURQUOISE	RED	TAN
1	Body Cloth	23-114-2	56"	0106 ABB	0106 AQQ	0106 ARR	0106 ATT
2	Vinyl	23-114-15		Not Serviced			
3	Vinyl 35.5 oz.	23-114-15	54"	0441 AB4	0441 AQ4	0441 VR7	0441 VT6
4	Vinyl 35.5 oz.	23-114-15	54"	0441 AB8	0441 AQ8	0441 VR7	0441 VT8

Distribution Drawing Legend Page Appears Following Illustration Section

1965 PLYMOUTH P1-M, P2-M 2 DOOR SEDAN
CLOTH AND VINYL TRIM
CODES M1B, M1Q, M1R, M1T

★ Indicates use as required.
⊟ Indicates parts not listed in any previous parts book.
May 1965, Supersedes Sept. 4, 1964.

MyMopar.com

Prices and specifications subject to change without notice.
• Indicates change or addition.
Printed in U.S.A.

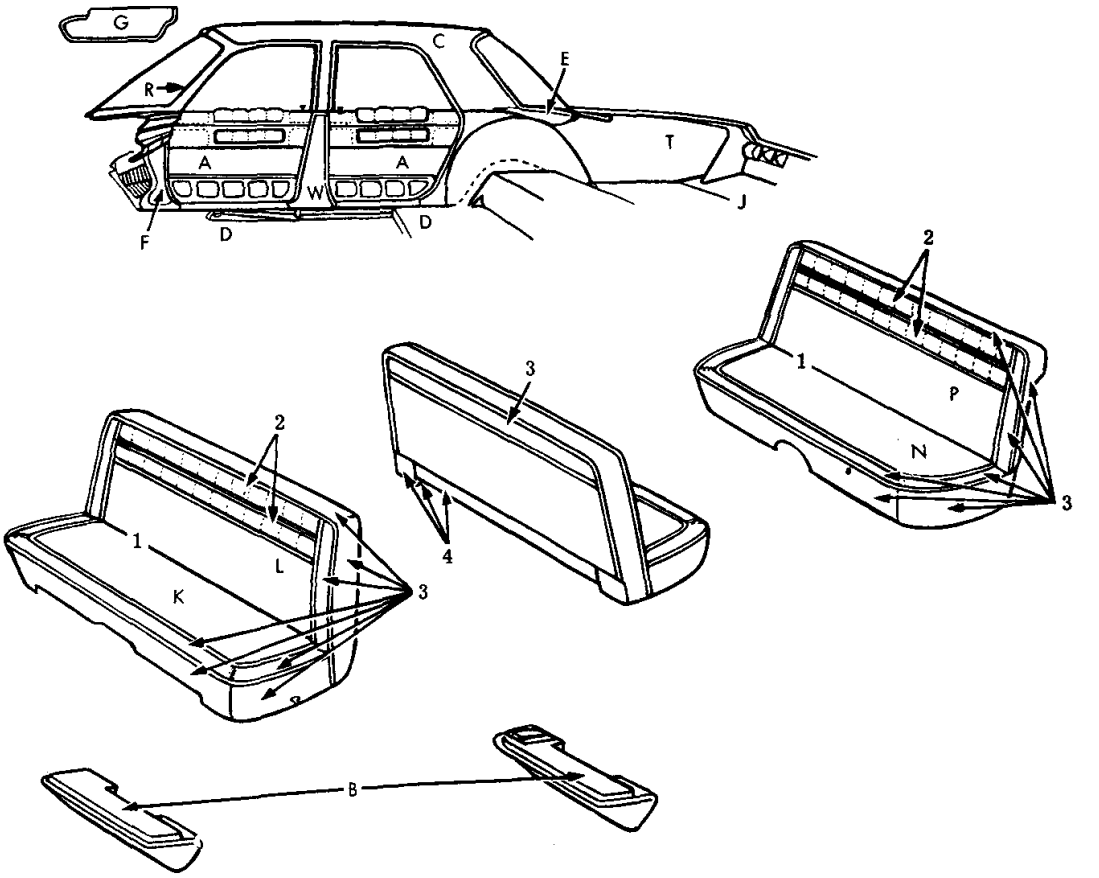

19T0190A

ITEM	TYPE OF MATERIAL	PART TYPE CODE	MAT'L WIDTH	PART NUMBERS AND COLORS BLUE	TURQUOISE	RED	TAN
1	Body Cloth	23-114-2	56"	0106 ABB	0106 AQQ	0106 ARR	0106 ATT
2	Vinyl	23-114-15		Not Serviced			
3	Vinyl 35.5 oz.	23-114-15	54"	0441 AB4	0441 AQ4	0441 VR7	0441 VT6
4	Vinyl 35.5 oz.	23-114-15	54"	0441 AB8	0441 AQ8	0441 VR7	0441 VT8

Distribution Drawing Legend Page Appears Following Illustration Section

1965 PLYMOUTH P1-M, P2-M 4 DOOR SEDAN
CLOTH AND VINYL TRIM
CODES M1B, M1Q, M1R, M1T

MyMopar.com

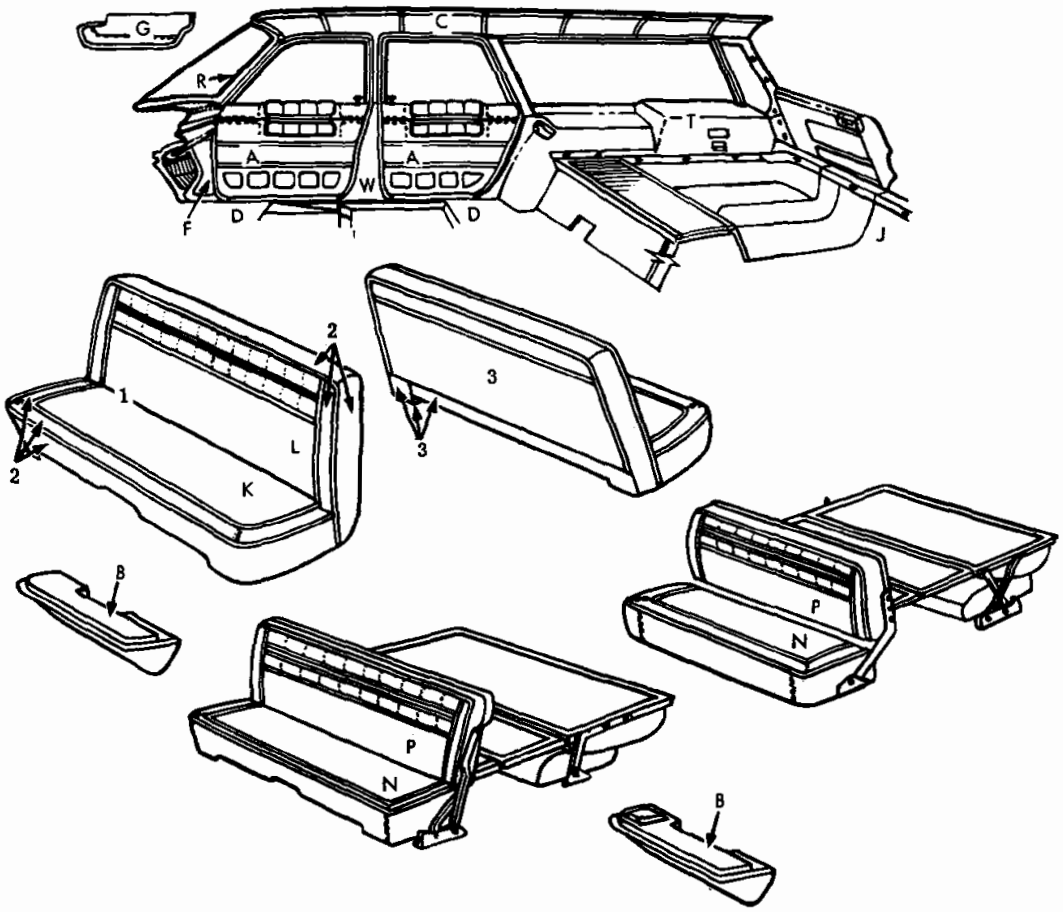

19T0191A

ITEM	TYPE OF MATERIAL	PART TYPE CODE	MAT'L WIDTH	PART NUMBERS AND COLORS BLUE	TURQUOISE	RED	TAN
1	Vinyl 36.7 oz.	23-114-15	52"	0494 AB4	0494 AQ4	0494 AR7	0494 AT6
2	Vinyl 35.5 oz.	23-114-15	54"	0441 AB4	0441 AQ4	0441 VR7	0441 VT6
3	Vinyl 35.5 oz.	23-114-15	54"	0441 AB8	0441 AQ8	0441 VR7	0441 VT8

Distribution Drawing Legend Page Appears Following Illustration Section

1965 PLYMOUTH P1-M, P2-M STATION WAGON
VINYL TRIM
CODES M4B, M4Q, M4R, M4T

MyMopar.com

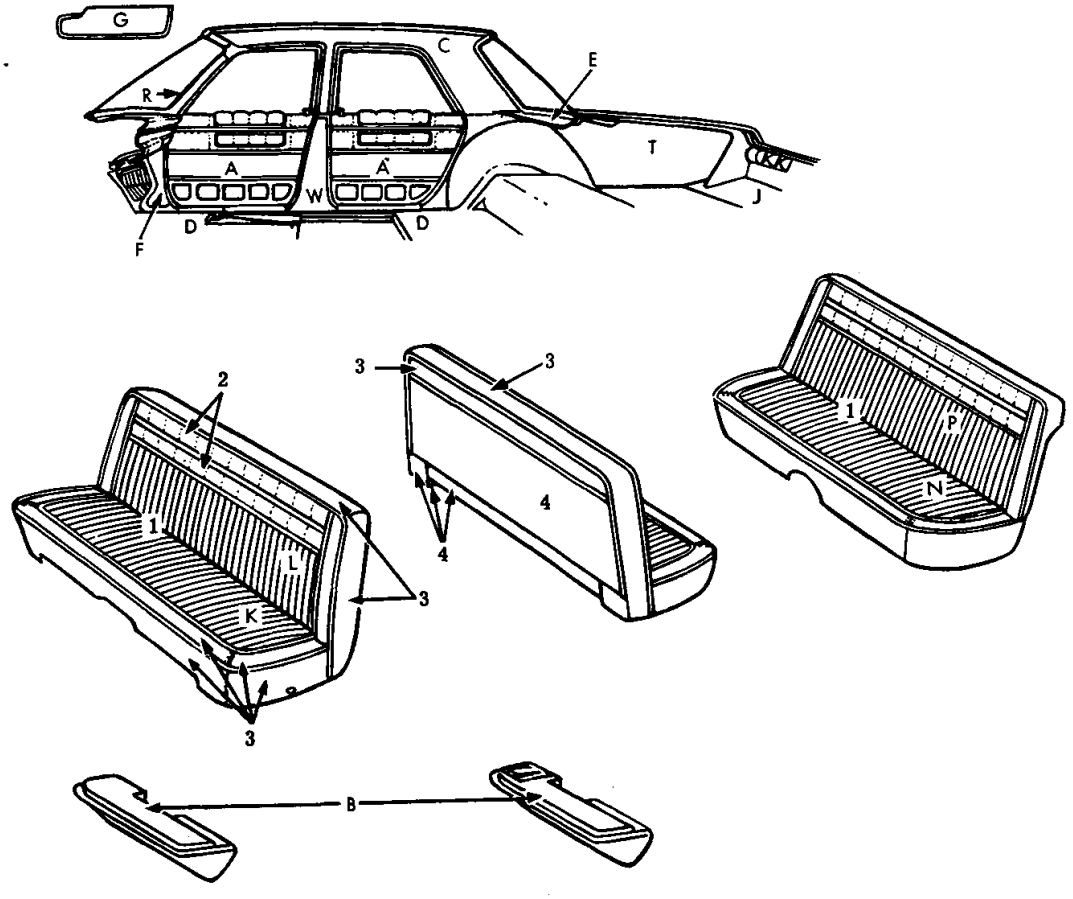

19T0192A

ITEM	TYPE OF MATERIAL	PART TYPE CODE	MAT'L WIDTH	PART NUMBERS AND COLORS BLUE	RED	TAN	
1	Vinyl 35.5 oz.	23-114-15	54"	Not Serviced			
2	Vinyl	23-114-15		Not Serviced			
3	Vinyl 35.5 oz.	23-114-15	54"	0441 AB4	0441 VR7	0441 VT6	
4	Vinyl 35.5 oz.	23-114-15	54"	0441 AB8	0441 VR7	0441 VT8	

Distribution Drawing Legend Page Appears Following Illustration Section

1965 PLYMOUTH P1-M, P2-M 4 DOOR SEDAN
VINYL TRIM
CODES M5B, M5R, M5T

MyMopar.com

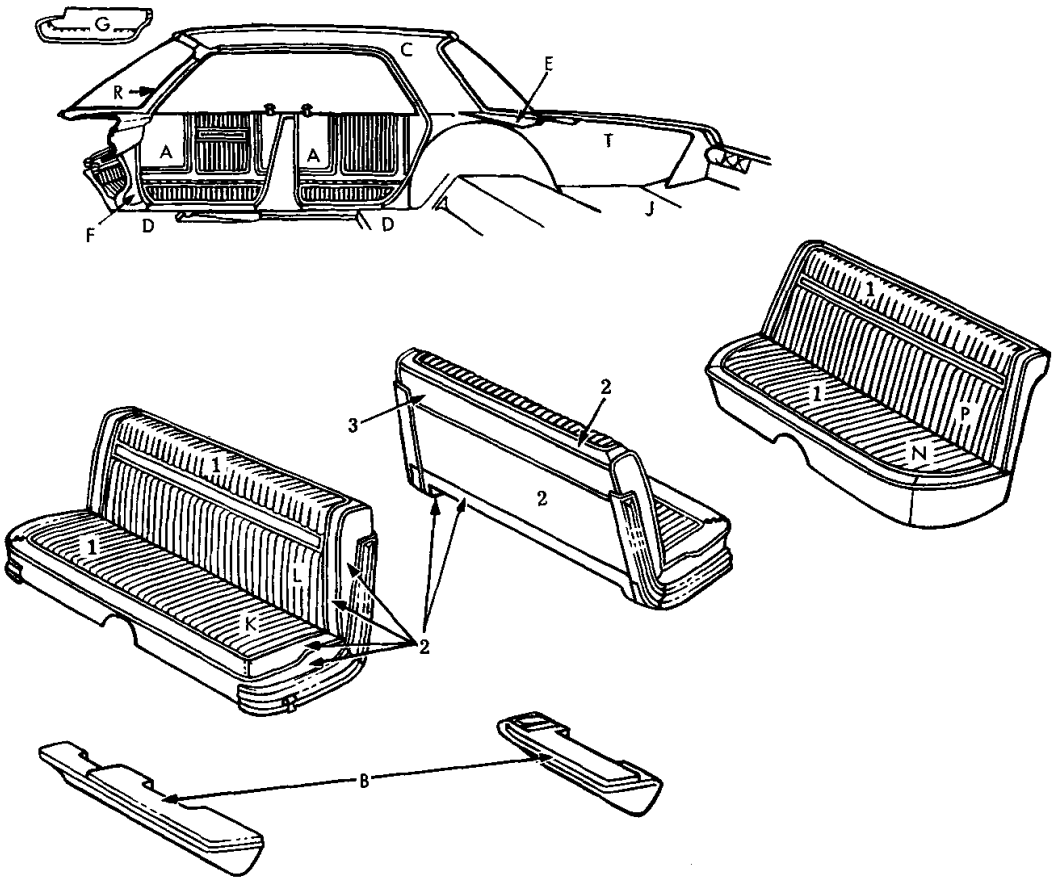

19T0193A

ITEM	TYPE OF MATERIAL	PART TYPE CODE	MAT'L WIDTH	PART NUMBERS AND COLORS BLUE	TURQUOISE	RED	TAN
1	Body Cloth	23-114-2		Not Serviced			
2	Vinyl 35.5 oz.	23-114-15	54"	0441 AB4	0441 AQ4	0441 VR7	0441 VT6
3	Vinyl 19 oz.	23-114-15	54"	---- ---	---- ---	0480 AR9	

ITEM	TYPE OF MATERIAL	PART TYPE CODE	MAT'L WIDTH	PART NUMBERS AND COLORS GOLD			
2	Vinyl 35.5	23-114-15	54"	0441 AY3			

Distribution Drawing Legend Page Appears Following Illustration Section

1965 PLYMOUTH P1-H, P2-H 4 DOOR HARDTOP
CLOTH AND VINYL TRIM
CODES H1B, H1Q, H1R, H1T, H1Y

MyMopar.com

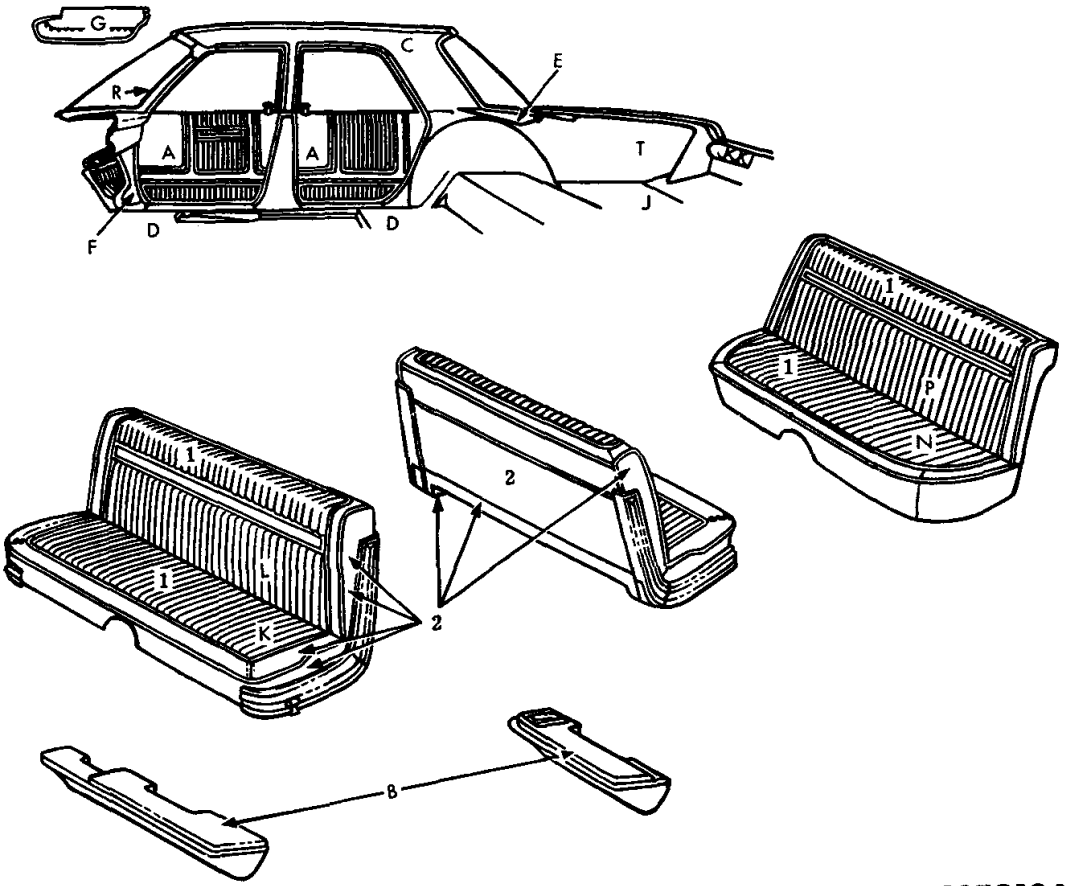

19T0194 A

ITEM	TYPE OF MATERIAL	PART TYPE CODE	MAT'L WIDTH	PART NUMBERS AND COLORS BLUE	TURQUOISE	RED	TAN
1	Body Cloth	23-114-2		Not Serviced			
2	Vinyl 35.5 oz.	23-114-15	54"	0441 AB4	0441 AQ4	0441 VR7	0441 VT6

ITEM	TYPE OF MATERIAL	PART TYPE CODE	MAT'L WIDTH	PART NUMBERS AND COLORS GOLD			
2	Vinyl 35.5 oz.	23-114-15	54"	0441 AY3			

Distribution Drawing Legend Page Appears Following Illustration Section

1965 PLYMOUTH P1-H, P2-H 4 DOOR SEDAN
CLOTH AND VINYL TRIM
CODES H1B, H1Q, H1R, H1T, H1Y

MyMopar.com

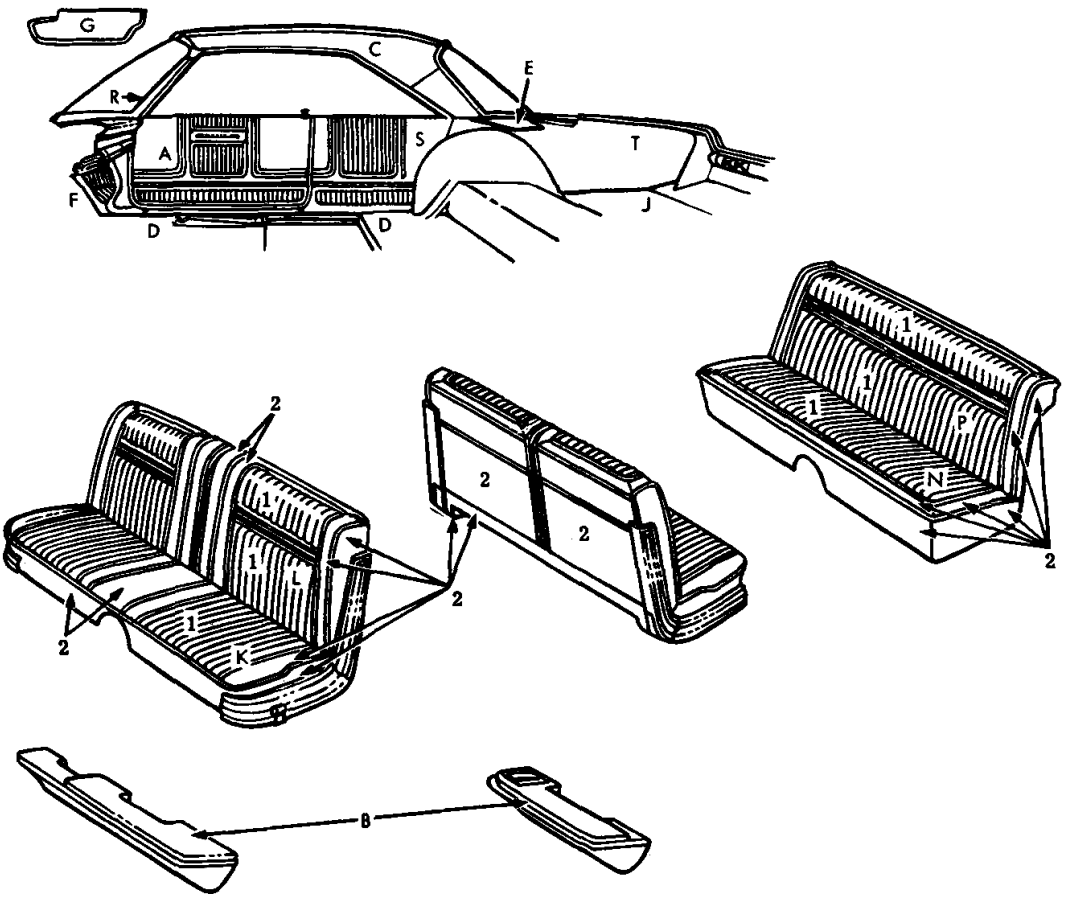

19T0199 A

ITEM	TYPE OF MATERIAL	PART TYPE CODE	MAT'L WIDTH	PART NUMBERS AND COLORS BLUE	TURQUOISE	RED	TAN
1	Body Cloth	23-114-2		Not Serviced			
2	Vinyl 35.5 oz.	23-114-15	54"	0441 AB4	0441 AQ4	0441 VR7	0441 VT6

ITEM	TYPE OF MATERIAL	PART TYPE CODE	MAT'L WIDTH	PART NUMBERS AND COLORS GOLD			
2	Vinyl 35.5 oz.	23-114-15	54"	0441 AY3			

Distribution Drawing Legend Page Appears Following Illustration Section

1965 PLYMOUTH P2-H 2 DOOR HARDTOP
CLOTH AND VINYL TRIM
CODES H2B, H2Q, H2R, H2T, H2Y

MyMopar.com

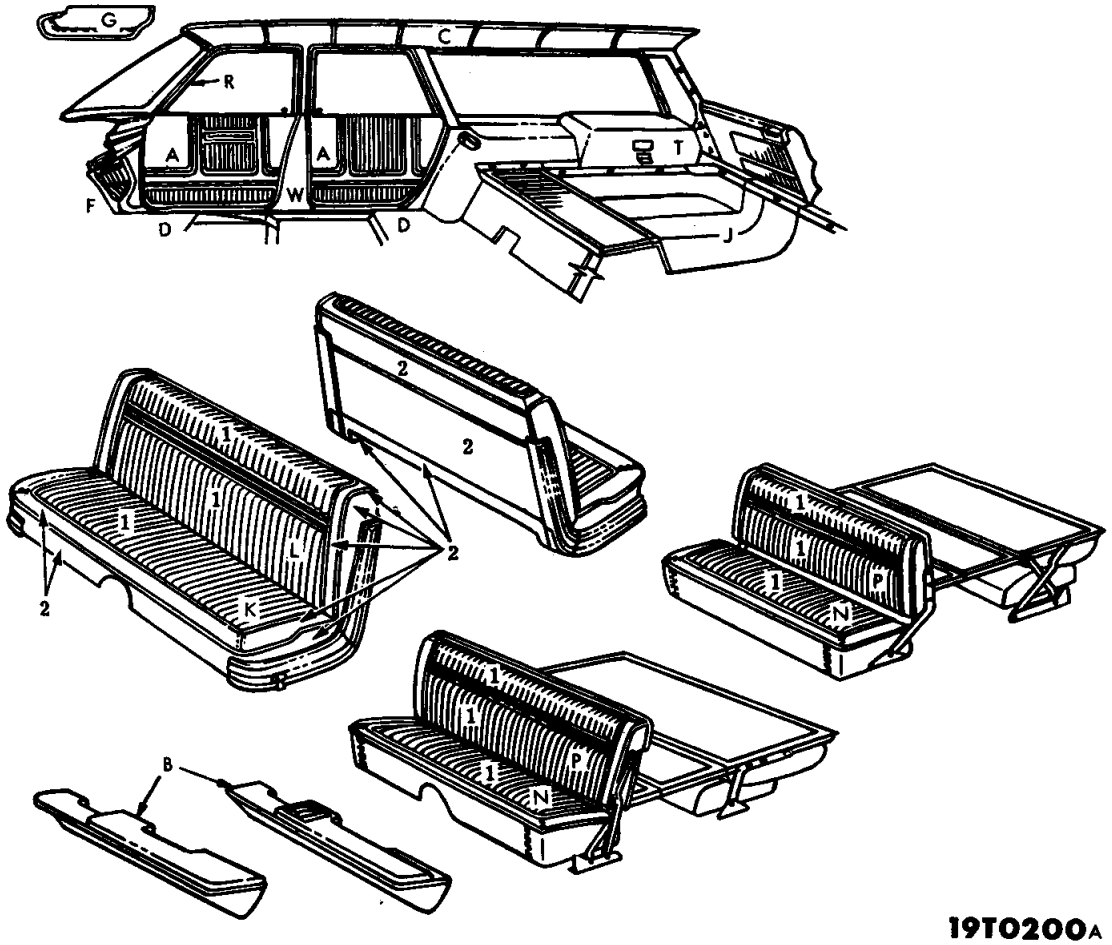

19T0200A

ITEM	TYPE OF MATERIAL	PART TYPE CODE	MAT'L WIDTH	PART NUMBERS AND COLORS BLUE	TURQUOISE	RED	TAN
1	Vinyl	23-114-15		Not Serviced			
2	Vinyl 35.5 oz.	23-114-15	54"	0441 AB4	0441 AQ4	0441 VR7	0441 VT6

ITEM	TYPE OF MATERIAL	PART TYPE CODE	MAT'L WIDTH	PART NUMBERS AND COLORS GOLD			
2	Vinyl 35.5 oz.	23-114-15	54"	0441 AY3			

Distribution Drawing Legend Page Appears Following Illustration Section

1965 PLYMOUTH P2-H STATION WAGON
VINYL TRIM
CODES H4B, H4Q, H4R, H4T, H4Y

MyMopar.com

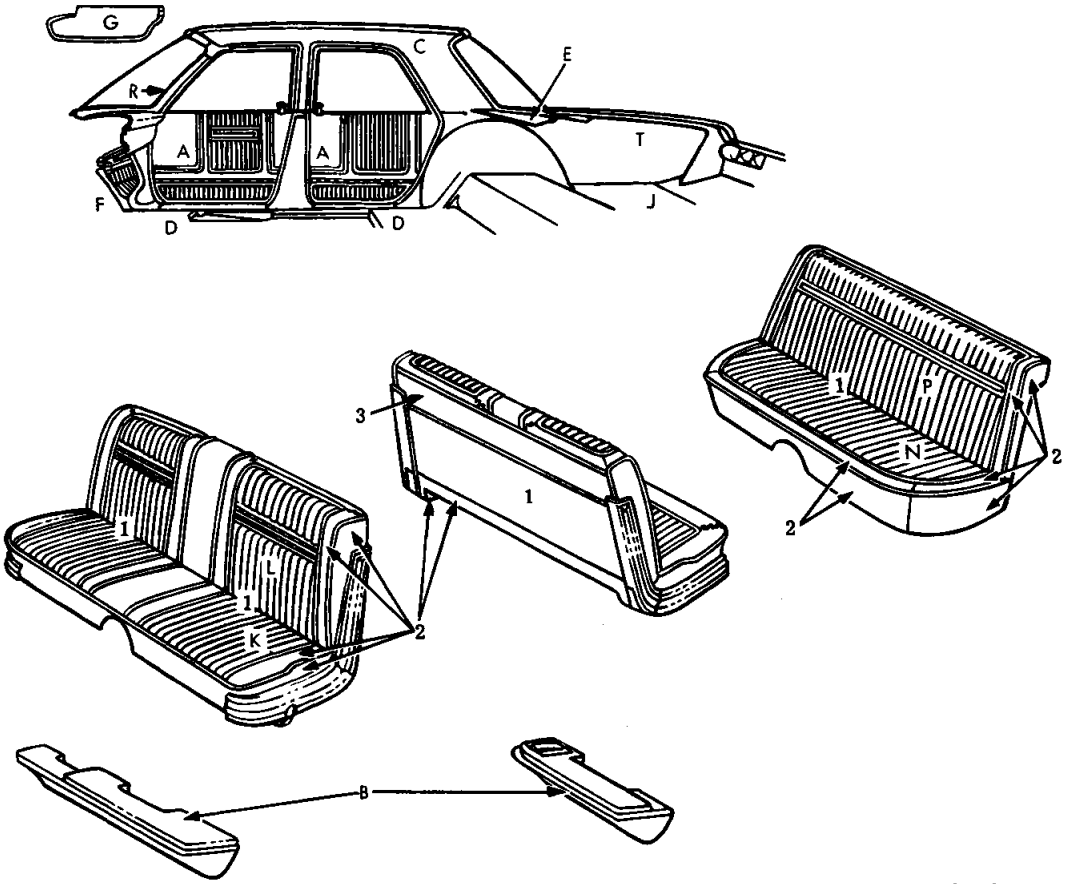

19T0195A

ITEM	TYPE OF MATERIAL	PART TYPE CODE	MAT'L WIDTH	PART NUMBERS AND COLORS BLUE	TURQUOISE	RED	BLACK
1	Vinyl	23-114-15		Not Serviced			
2	Vinyl 35.5 oz.	23-114-15	54"	0441 AB4	0441 AQ4	0441 VR7	0441 VX9
3	Vinyl 19 oz.	23-114-15	54"	---- ---	---- ---	0480 AR9	*0464 AX9

ITEM	TYPE OF MATERIAL	PART TYPE CODE	MAT'L WIDTH	PART NUMBERS AND COLORS GOLD			
2	Vinyl 35.5 oz.	23-114-15	54"	0441 AY3			

Distribution Drawing Legend Page Appears Following Illustration Section

1965 PLYMOUTH P1-H, P2-H 4 DOOR SEDAN
VINYL TRIM
CODES H5B, H5Q, H5R, H5X, H5Y

MyMopar.com

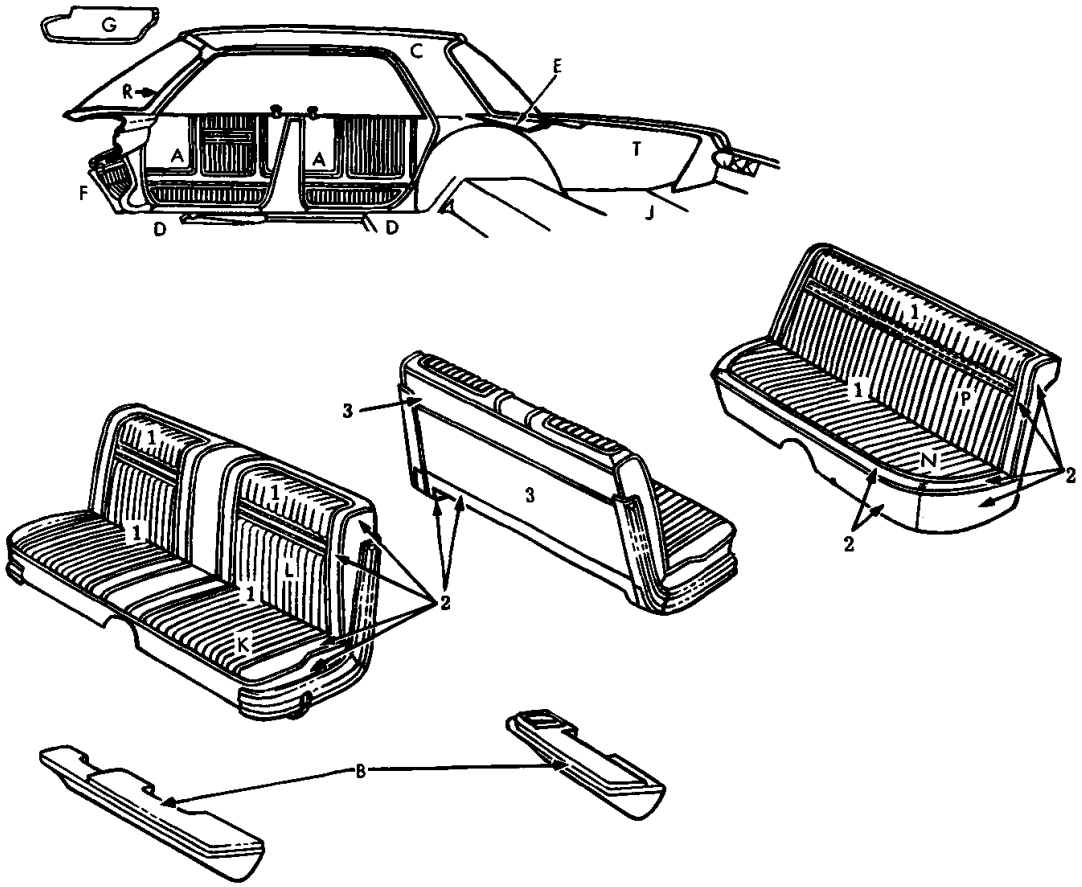

19T0197A

ITEM	TYPE OF MATERIAL	PART TYPE CODE	MAT'L WIDTH	PART NUMBERS AND COLORS BLUE	TURQUOISE	RED	BLACK
1	Vinyl	23-114-15		Not Serviced			
2	Vinyl 35.5 oz.	23-114-15	54"	0441 AB4	0441 AQ4	0441 VR7	0441 VX9
3	Vinyl 19 oz.	23-114-15	54"	---- ---	---- ---	0480 AR9	*0464 AX9

ITEM	TYPE OF MATERIAL	PART TYPE CODE	MAT'L WIDTH	PART NUMBERS AND COLORS GOLD			
2	Vinyl 35.5 oz.	23-114-15	54"	0441 AY3			

Distribution Drawing Legend Page Appears Following Illustration Section

1965 PLYMOUTH P1-H, P2-H 4 DOOR HARDTOP
VINYL TRIM
CODES H5B, H5Q, H5R, H5X, H5Y

★ Indicates use as required.
⊟ Indicates parts not listed in any previous parts book.
• Indicates change or addition.

MyMopar.com

Printed in U.S.A.
Prices and specifications subject to change without notice.
May 1965, Supersedes Sept. 4, 1964.

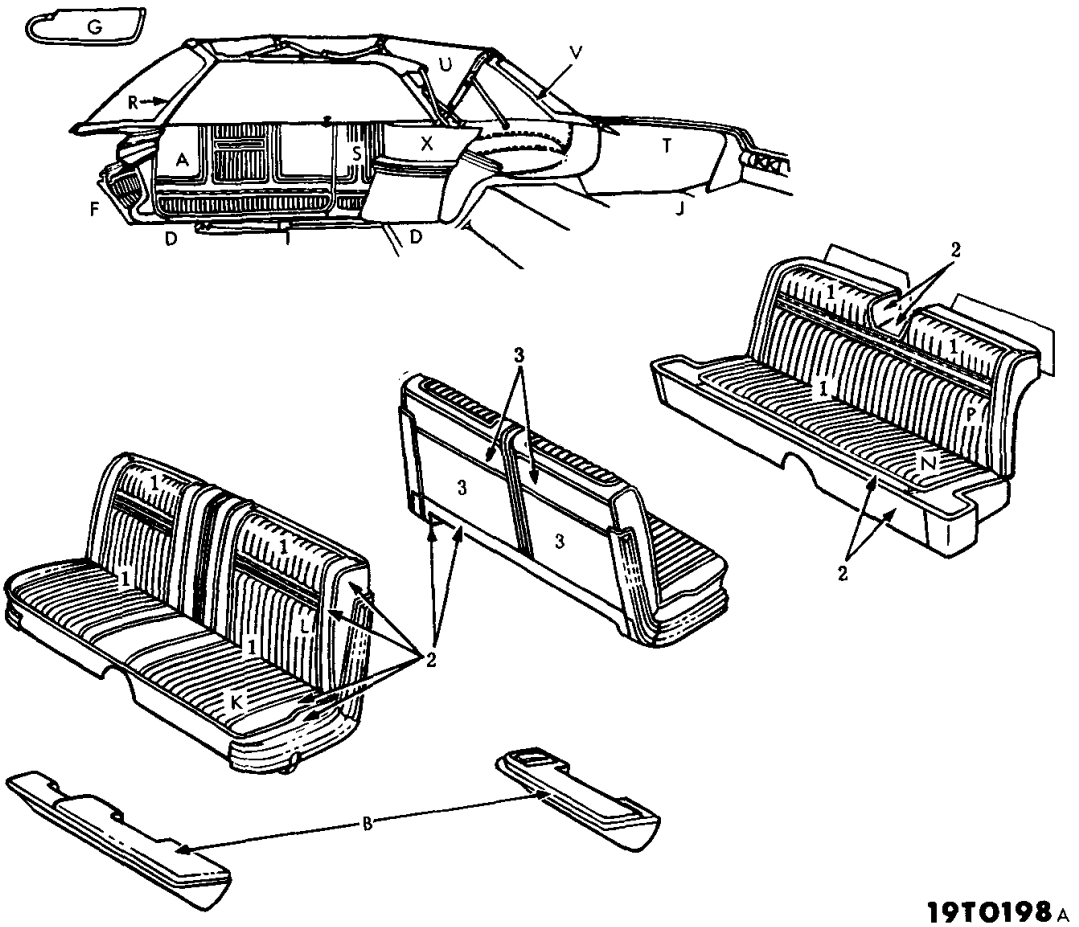

19T0198 A

ITEM	TYPE OF MATERIAL	PART TYPE CODE	MAT'L WIDTH	PART NUMBERS AND COLORS BLUE	TURQUOISE	RED	BLACK
1	Vinyl	23-114-15		Not Serviced			
2	Vinyl 35.5 oz.	23-114-15	54"	0441 AB4	0441 AQ4	0441 VR7	0441 VX9
3	Vinyl 19 oz.	23-114-15	54"	---- ---	---- ---	0480 AR9	*0464 AX9

ITEM	TYPE OF MATERIAL	PART TYPE CODE	MAT'L WIDTH	PART NUMBERS AND COLORS GOLD			
2	Vinyl 35.5 oz.	23-114-15	54"	0441 AY3			

Distribution Drawing Legend Page Appears Following Illustration Section

1965 PLYMOUTH P1-H, P2-H CONVERTIBLE
VINYL TRIM
CODES H5B, H5Q, H5R, H5X, H5Y

★ Indicates use as required.
B Indicates parts not listed in any previous parts book.
May 1965, Supersedes Sept. 4, 1964.

MyMopar.com

Printed in U.S.A.
Prices and specifications subject to change without notice.
* Indicates change or addition.

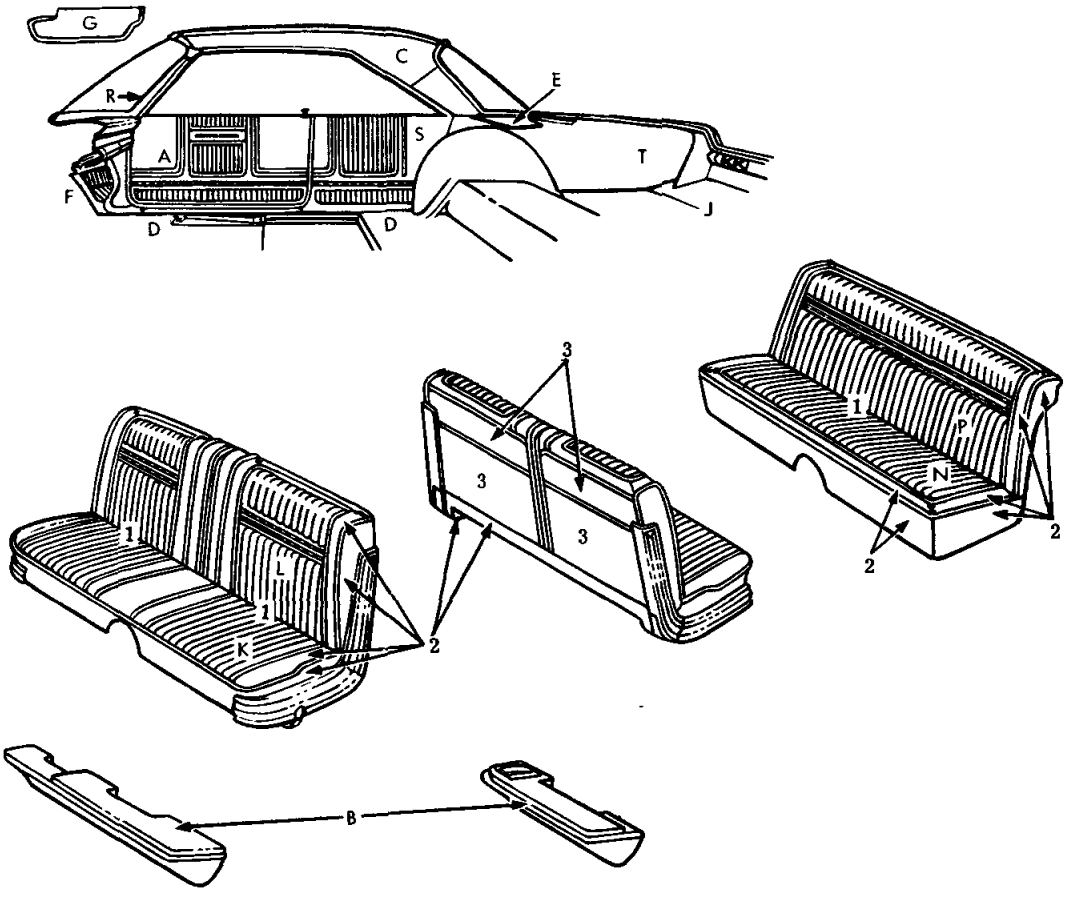

19T0196A

ITEM	TYPE OF MATERIAL	PART TYPE CODE	MAT'L WIDTH	PART NUMBERS AND COLORS BLUE	TURQUOISE	RED	BLACK
1	Vinyl	23-114-15		Not Serviced			
2	Vinyl 35.5 oz.	23-114-15	54"	0441 AB4	0441 AQ4	0441 VR7	0441 VX9
3	Vinyl 19 oz.	23-114-15	54"	---- ---	---- ---	0480 AR9	0464 AX9

ITEM	TYPE OF MATERIAL	PART TYPE CODE	MAT'L WIDTH	PART NUMBERS AND COLORS GOLD			
2	Vinyl 35.5 oz.	23-114-15	54"	0441 AY3			

Distribution Drawing Legend Page Appears Following Illustration Section

1965 PLYMOUTH P1-H, P2-H 2 DOOR HARDTOP
VINYL TRIM
CODES H5B, H5Q, H5R, H5X, H5Y

MyMopar.com

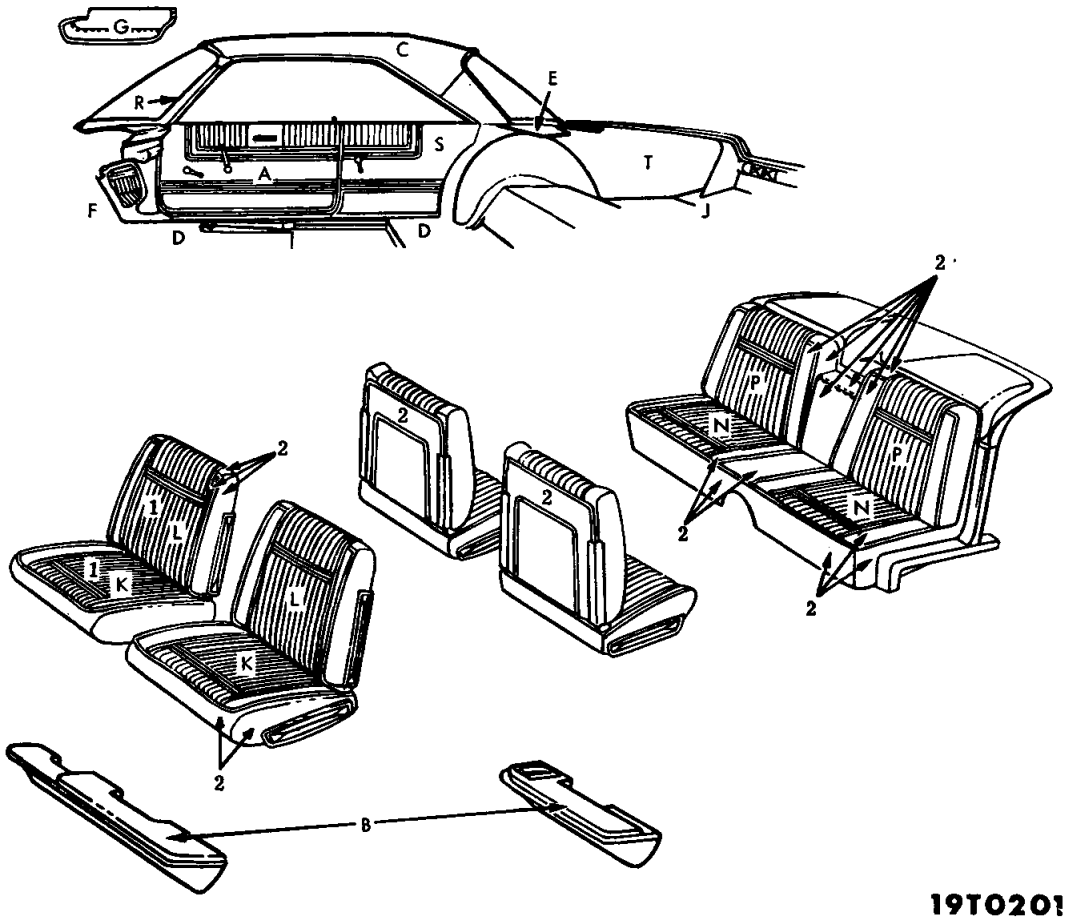

19T0201A

ITEM	TYPE OF MATERIAL	PART TYPE CODE	MAT'L WIDTH	PART NUMBERS AND COLORS BLUE	TURQUOISE	RED	COPPER
1	Vinyl	23-114-15		Not Serviced			
2	Vinyl 35.5 oz.	23-114-15	54"	0441 AB8	0441 AQ8	0441 VR7	0441 VX9

ITEM	TYPE OF MATERIAL	PART TYPE CODE	MAT'L WIDTH	PART NUMBERS AND COLORS GOLD	BLACK		
2	Vinyl 35.5 oz.	23-114-15	54"	0441 AY3	0441 VX9		

Distribution Drawing Legend Page Appears Following Illustration Section

1965 PLYMOUTH P2-P 2 DOOR HARDTOP
VINYL TRIM
CODES P4B, P4Q, P4R, P4U, P4X, P4Y

MyMopar.com

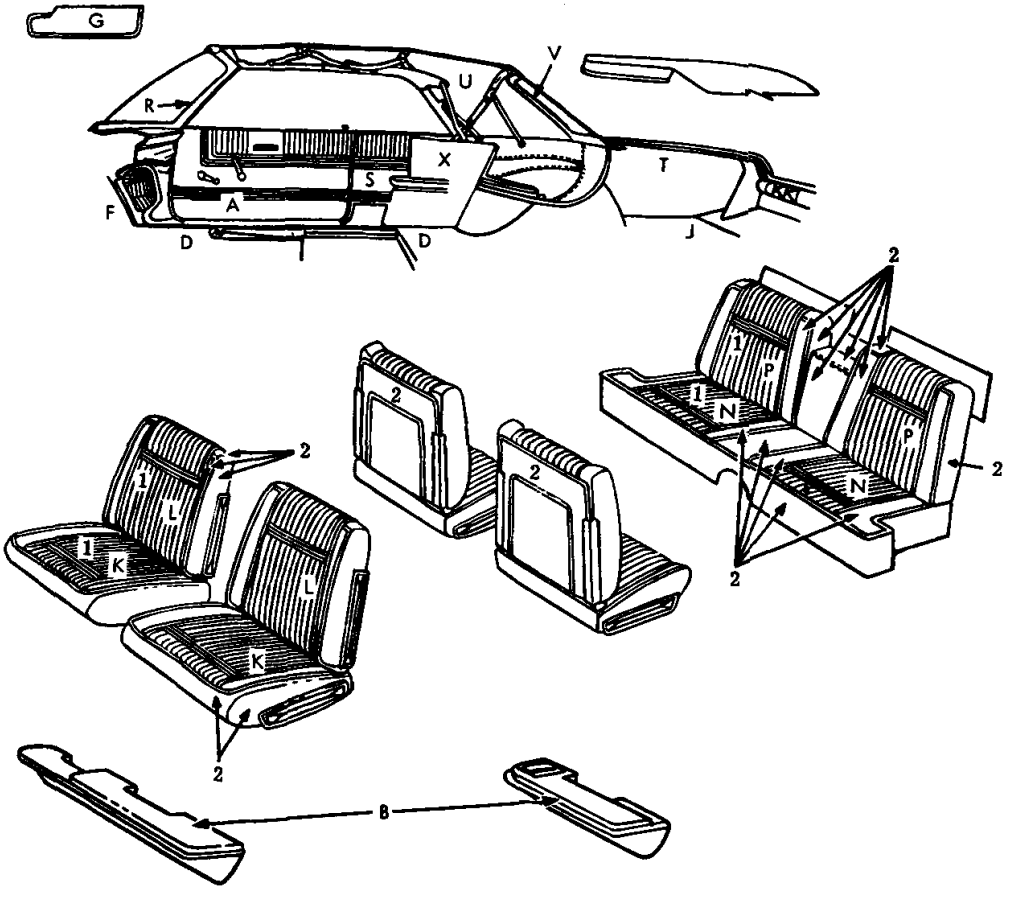

19T0202A

ITEM	TYPE OF MATERIAL	PART TYPE CODE	MAT'L WIDTH	PART NUMBERS AND COLORS BLUE	TURQUOISE	RED	COPPER
1	Vinyl	23-114-15		Not Serviced			
2	Vinyl 35.5 oz.	23-114-15	54"	0441 AB8	0441 AQ8	0441 VR7	0441 VX9

ITEM	TYPE OF MATERIAL	PART TYPE CODE	MAT'L WIDTH	PART NUMBERS AND COLORS GOLD	BLACK		
2	Vinyl 35.5 oz.	23-114-15	54"	0441 AY3	0441 VX9		

Distribution Drawing Legend Page Appears Following Illustration Section

1965 PLYMOUTH P2-P CONVERTIBLE
VINYL TRIM
CODES P4B, P4Q, P4R, P4U, P4X, P4Y

★ Indicates use as required.
⊟ Indicates parts not listed in any previous parts book.
• Indicates change or addition.

Printed in U.S.A.
Prices and specifications subject to change without notice.
May 1965, Supersedes Sept. 4, 1964.
MyMopar.com

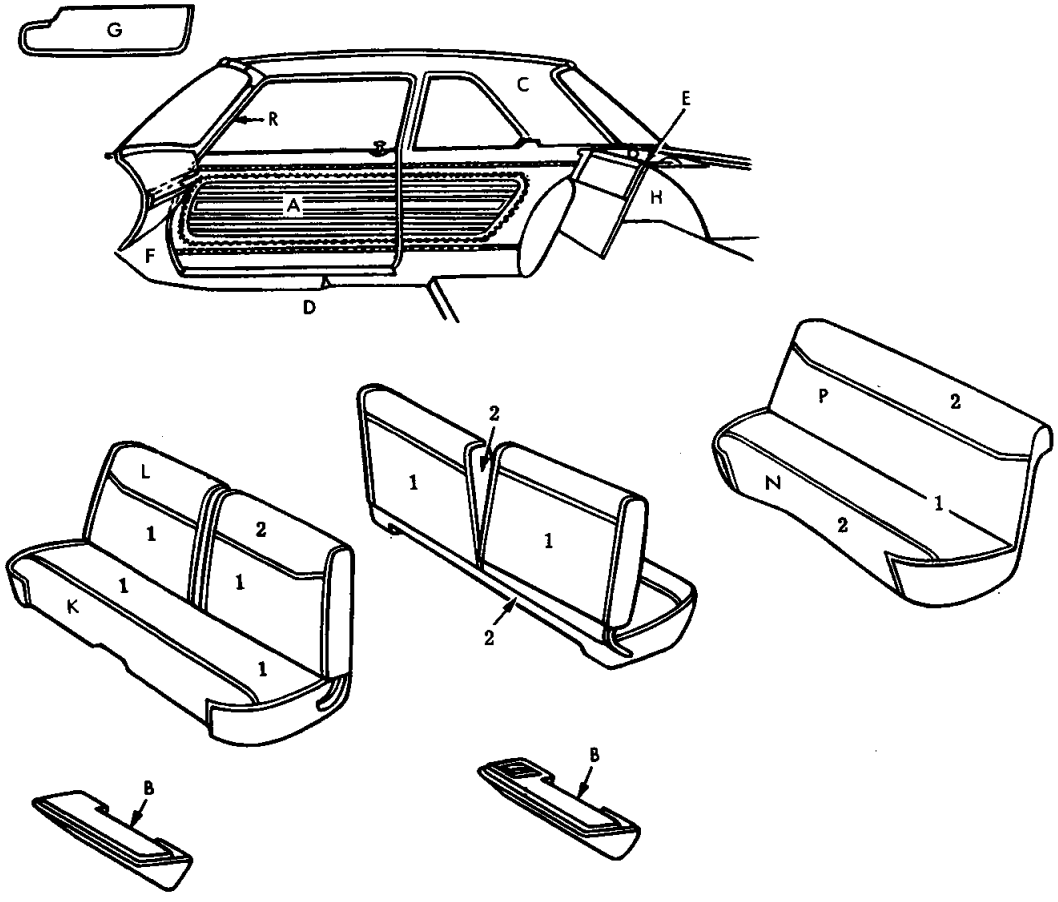

19T0165A

ITEM	TYPE OF MATERIAL	PART TYPE CODE	MAT'L WIDTH	PART NUMBERS AND COLORS BLUE	RED	TAN	
1	Body Cloth	23-114-2	57"	0128 ABB	0128 ARR	0128 ATT	
2	Vinyl 35.5 oz.	23-114-15	54"	0441 AB4	0441 VR6	0441 VT6	

Distribution Drawing Legend Page Appears Following Illustration Section

1965 BELVEDERE I R1-L, R2-L 2 DOOR SEDAN
CLOTH AND VINYL TRIM
CODES L1B, K1B, L1R, K1R, L1T, K1T

★ Indicates use as required.
⊟ Indicates parts not listed in any previous parts book.
May 1965, Supersedes Sept. 4, 1964.

MyMopar.com

Printed in U.S.A.
Prices and specifications subject to change without notice.
• Indicates change or addition.

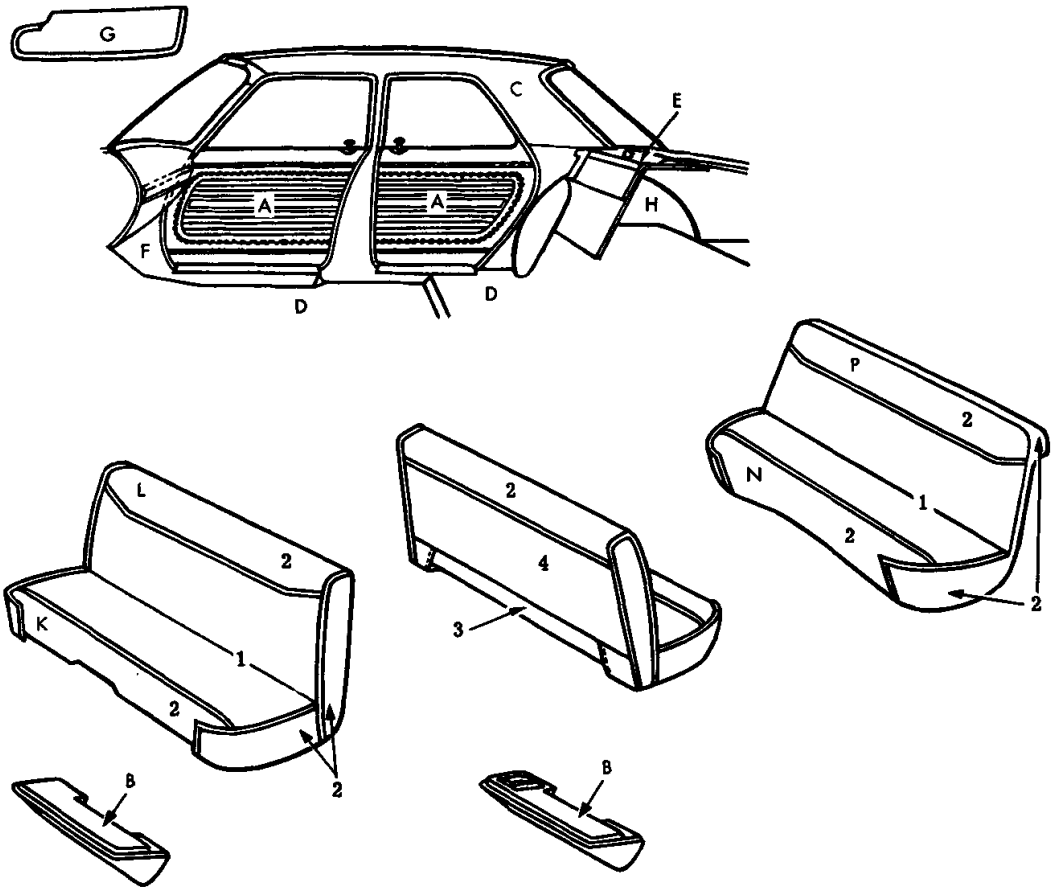

19T0166

ITEM	TYPE OF MATERIAL	PART TYPE CODE	MAT'L WIDTH	PART NUMBERS AND COLORS BLUE	RED	TAN	
1	Body Cloth	23-114-2	57"	B0128 ABB	B0128 ARR	B0128 ATT	
2	Vinyl 35.5 oz.	23-114-15	54"	B0441 AB4	0441 VR6	0441 VT6	
3	Vinyl 35.5 oz.	23-114-15	54"	B0441 AB8	0441 VR6	0441 VT6	
4	Vinyl 21 oz.	23-114-15	54"	B0487 AB8	B0487 AR6	B0487 AT8	

Distribution Drawing Legend Page Appears Following Illustration Section

1965 BELVEDERE I R1-L, R2-L 4 DOOR SEDAN
CLOTH AND VINYL TRIM
CODES L1B, K1B, L1R, K1R, L1T, K1T

★ Indicates use as required.
B Indicates parts not listed in any previous parts book.

Printed in U.S.A.
Prices and specifications subject to change without notice.
September 4, 1964.

MyMopar.com

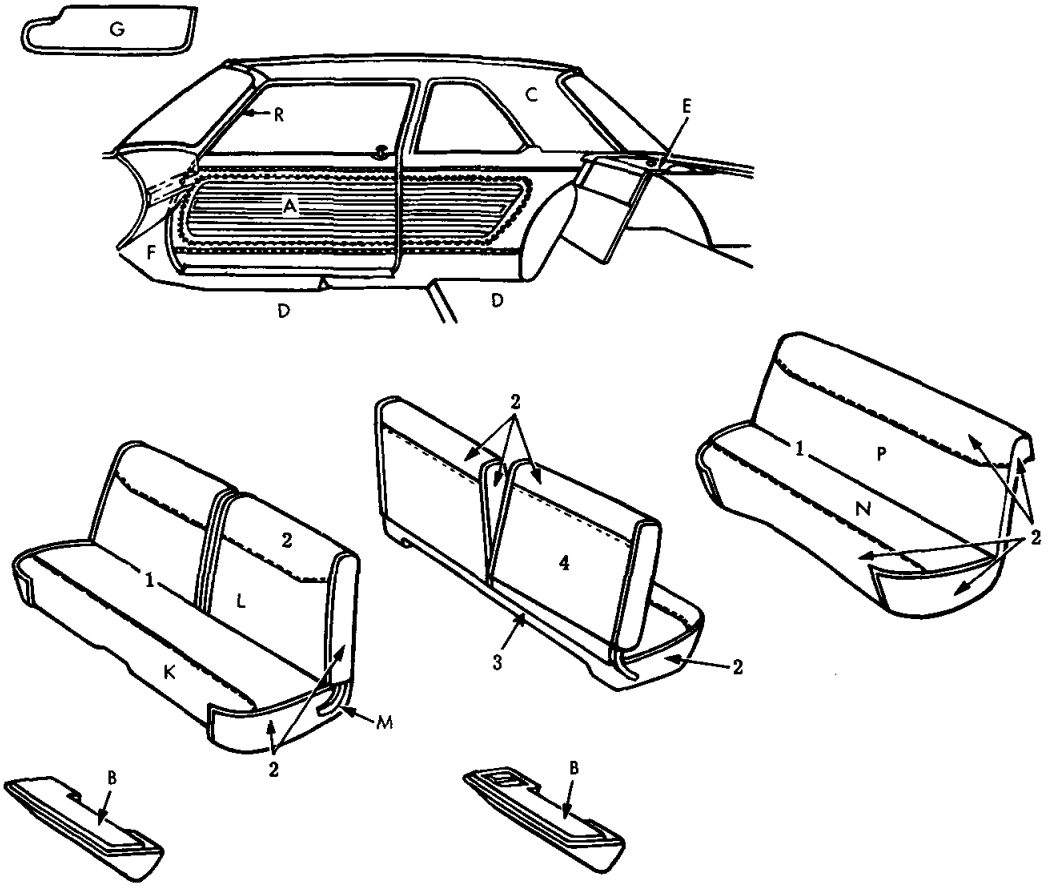

19T0167 A

ITEM	TYPE OF MATERIAL	PART TYPE CODE	MAT'L WIDTH	PART NUMBERS AND COLORS TAN			
1	Body Cloth	23-114-2	52"	⊟0104 ATT			
2	Vinyl 35.5 oz.	23-114-15	54"	0441 VT6			
3	Vinyl 35.5 oz.	23-114-15	54"	0441 VT8			
4	Vinyl 21 oz.	23-114-15	54"	⊟0487 AT8			

Distribution Drawing Legend Page Appears Following Illustration Section

1965 BELVEDERE I 2 DOOR SEDAN
CLOTH AND VINYL TRIM
CODES L2T, K2T

★ Indicates use as required.
⊟ Indicates parts not listed in any previous parts book.
May 1965, Supersedes Sept. 4, 1964.

Prices and specifications subject to change without notice.
Printed in U.S.A.
MyMopar.com
* Indicates change or addition.

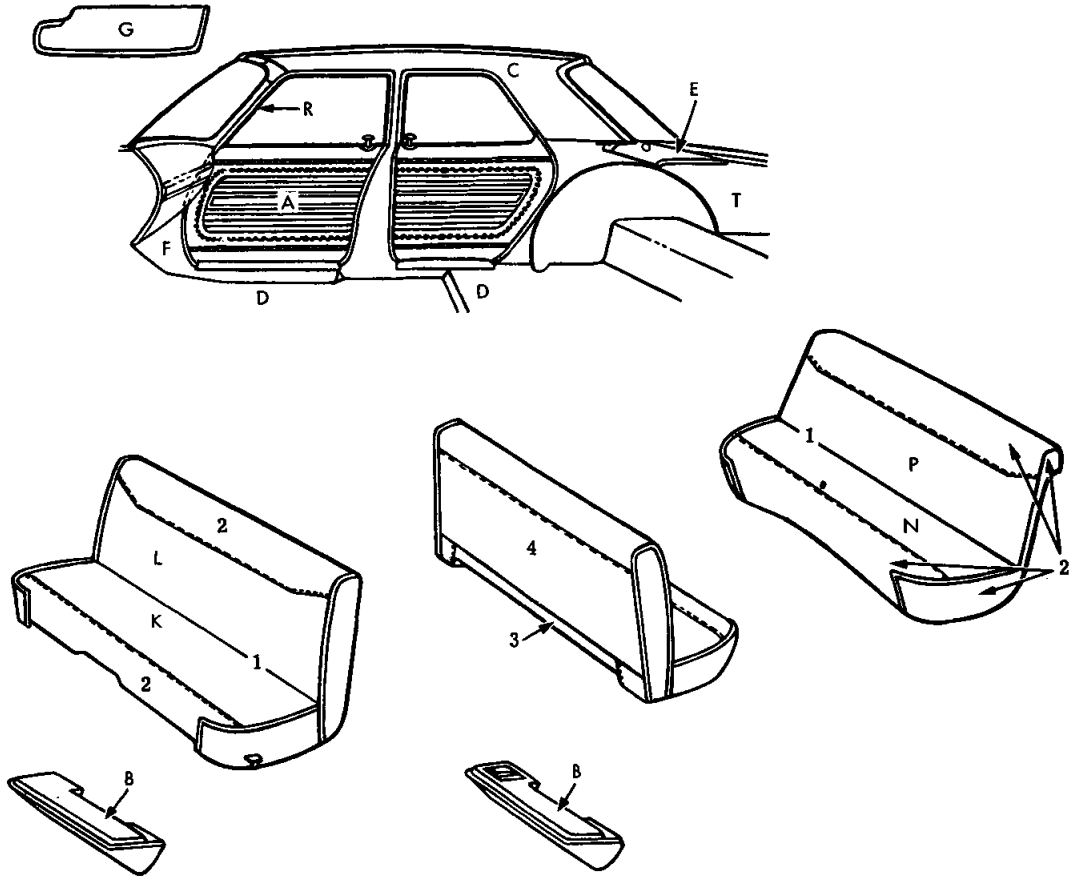

19T0168

ITEM	TYPE OF MATERIAL	PART TYPE CODE	MAT'L WIDTH	PART NUMBERS AND COLORS TAN			
1	Body Cloth	23-114-2	52"	⊟0104 ATT			
2	Vinyl 35.5 oz.	23-114-15	54"	0441 VT6			
3	Vinyl 35.5 oz.	23-114-15	54"	0441 VT8			
4	Vinyl 21 oz.	23-114-15	54"	⊟0487 AT8			

Distribution Drawing Legend Page Appears Following Illustration Section

1965 BELVEDERE 4 DOOR SEDAN
CLOTH AND VINYL TRIM
CODES L2T, K2T

★ Indicates use as required.
⊟ Indicates parts not listed in any previous parts book.

Printed in U.S.A.
Prices and specifications subject to change without notice.
September 4, 1964.

MyMopar.com

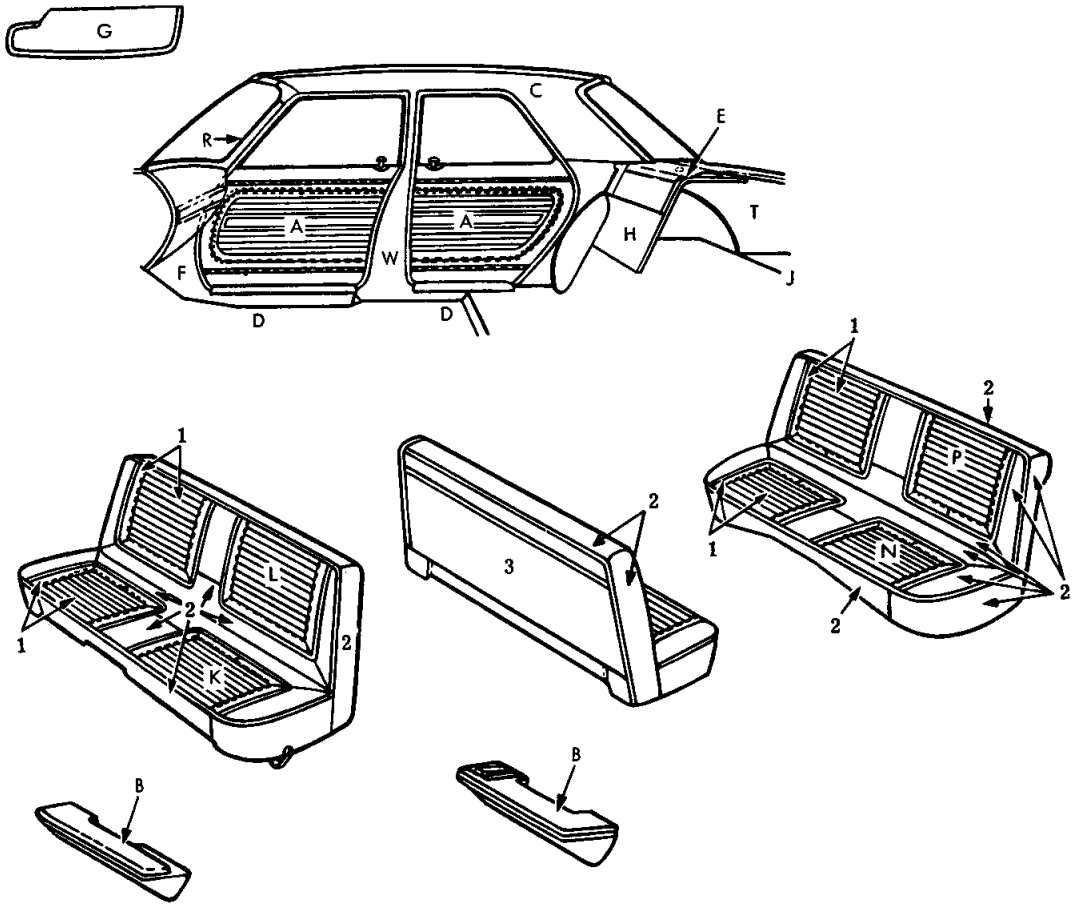

19T0170 A

ITEM	TYPE OF MATERIAL	PART TYPE CODE	MAT'L WIDTH	PART NUMBERS AND COLORS BLUE	RED	TAN	
1	Vinyl 35.5 oz.	23-114-15	54"	0464 AB8	0464 AR5	0464 AT8	
2	Vinyl 35.5 oz.	23-114-15	54"	0441 AB4	0441 VR6	0441 VT6	
3	Vinyl 35.5 oz.	23-114-15	54"	*0487 AB8	*0487 AR5	*0487 AT8	

Distribution Drawing Legend Page Appears Following Illustration Section

1965 BELVEDERE I R1-L, R2-L 4 DOOR SEDAN
VINYL TRIM
CODES L5B, L5R, L5T

MyMopar.com

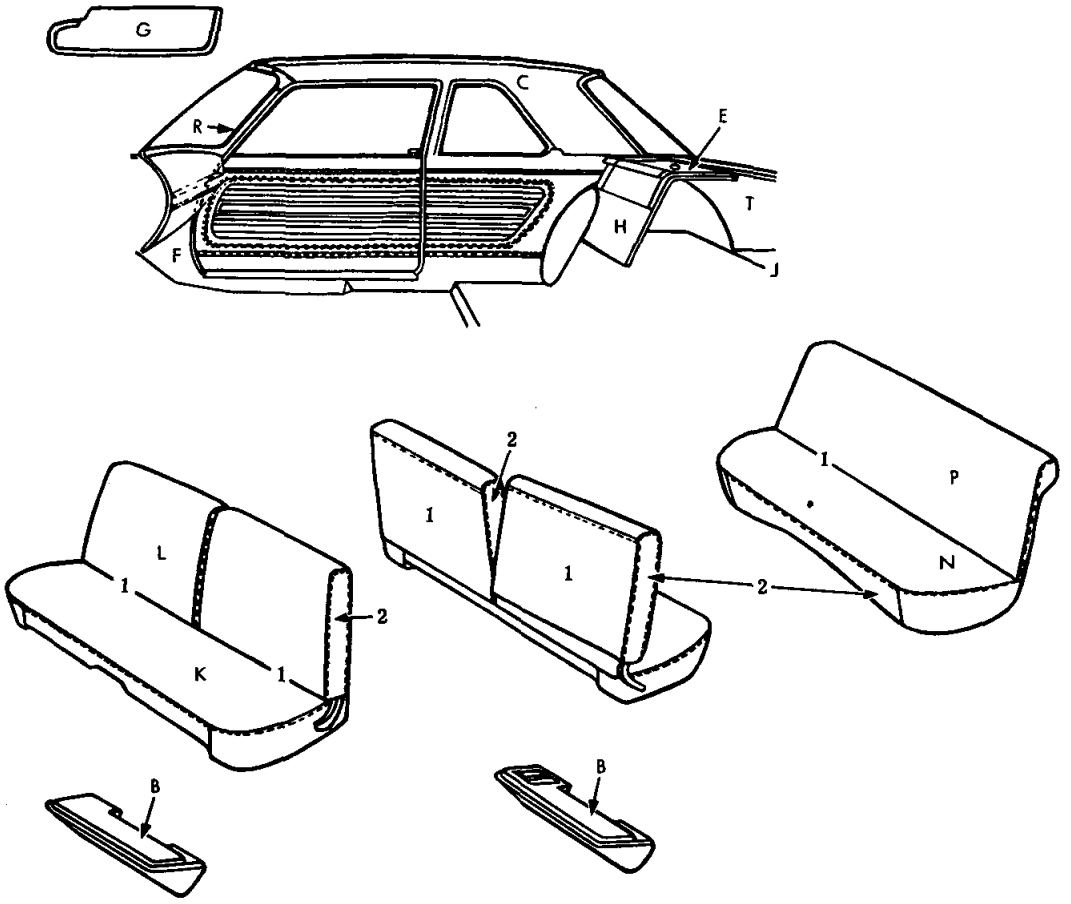

19T0171 A

ITEM	TYPE OF MATERIAL	PART TYPE CODE	MAT'L WIDTH	PART NUMBERS AND COLORS TAN			
1	Vinyl 37 oz.	23-114-15	50"	B0445 AT8			
2	Vinyl 35.5 oz.	23-114-15	54"	0441 VT8			

Distribution Drawing Legend Page Appears Following Illustration Section

1965 BELVEDERE I R1-L, R2-L 2 DOOR SEDAN
VINYL TRIM
CODES L8T, K8T, T8T

★ Indicates use as required.
B Indicates parts not listed in any previous parts book.
** Indicates change or addition.

MyMopar.com

Printed in U.S.A.
Prices and specifications subject to change without notice.
May 1965, Supersedes Sept. 4, 1964.

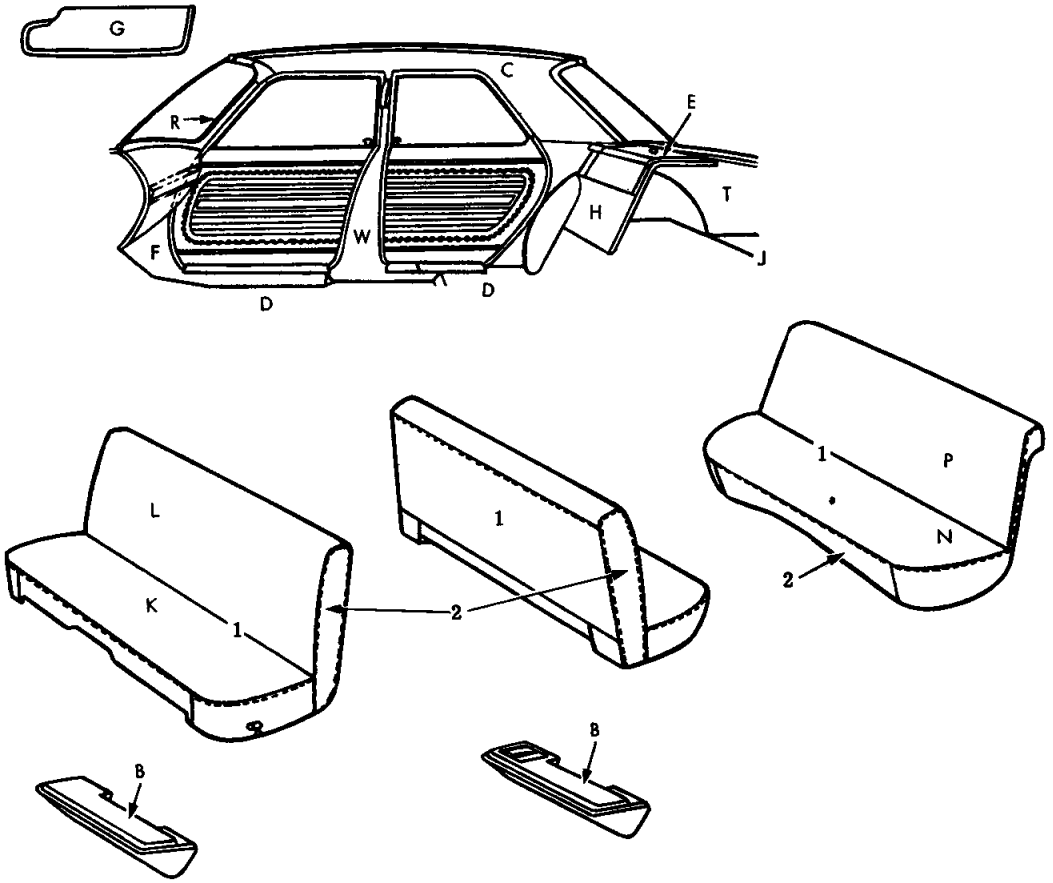

19T0172A

ITEM	TYPE OF MATERIAL	PART TYPE CODE	MAT'L WIDTH	PART NUMBERS AND COLORS TAN			
1	Vinyl 37 oz.	23-114-15	50"	⊟0445 AT8			
2	Vinyl 35.5 oz.	23-114-15	54"	0441 VT8			

Distribution Drawing Legend Page Appears Following Illustration Section

1965 BELVEDERE I R1-L, R2-L 4 DOOR SEDAN
VINYL TRIM
CODES L8T, K8T, T8T

★ Indicates use as required.
⊟ Indicates parts not listed in any previous parts book.
May 1965, Supersedes Sept. 4, 1964.

Printed in U.S.A.
Prices and specifications subject to change without notice.
* Indicates change or addition.

MyMopar.com

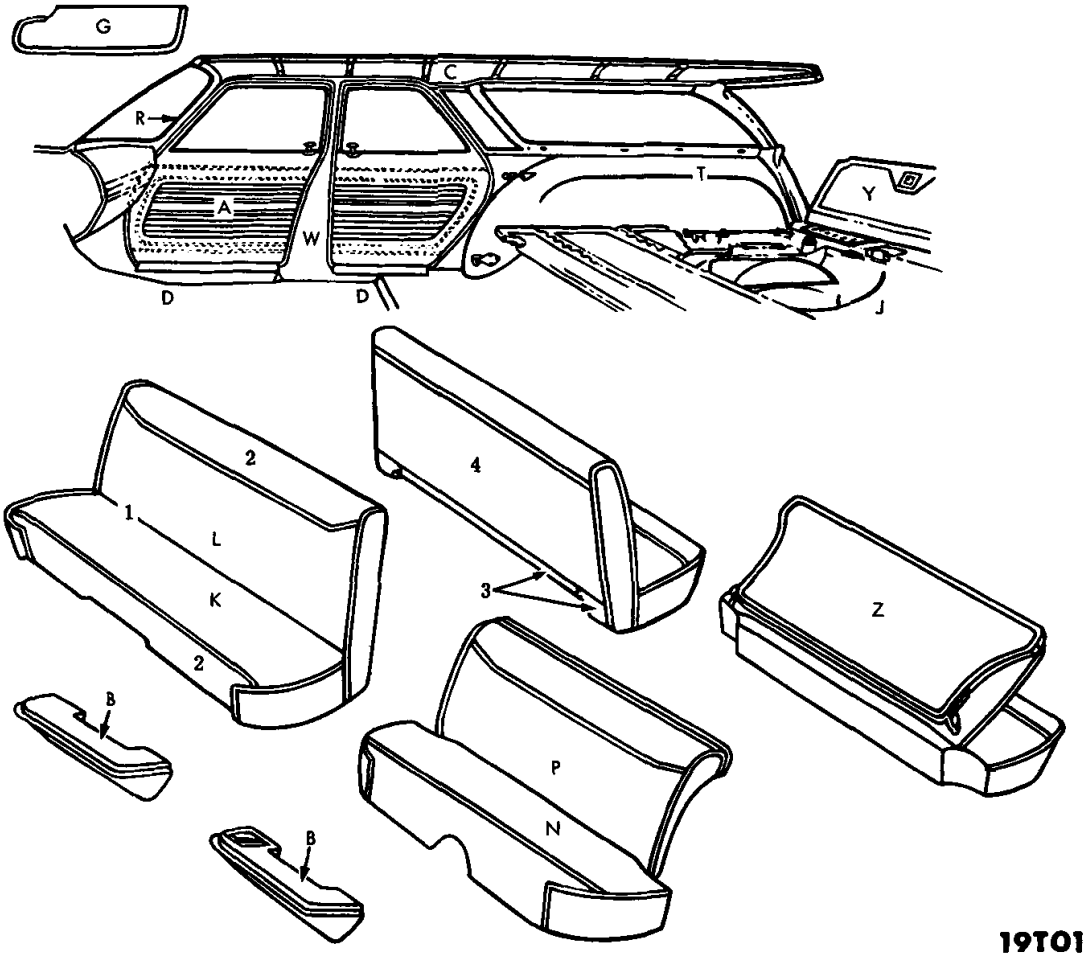

19T0169A

ITEM	TYPE OF MATERIAL	PART TYPE CODE	MAT'L WIDTH	PART NUMBERS AND COLORS BLUE	RED	TAN	
1	Vinyl 36.7 oz.	23-114-15	62"	0493 AB4	0493 AR6	0493 AT6	
2	Vinyl 35.5 oz.	23-114-15	54"	0441 AB4	0441 VR6	0441 VT6	
3	Vinyl 35.5 oz.	23-114-15	54"	0441 AB8	0441 VR6	0441 VT6	
4	Vinyl 35.5 oz.	23-114-15	54"	*0487 AB8	*0487 AR6	*0487 AT8	

Distribution Drawing Legend Page Appears Following Illustration Section

1965 BELVEDERE I R1-L, R2-L STATION WAGON
VINYL TRIM
CODES L4B, K4B, L4R, K4R, L4T, K4T

MyMopar.com

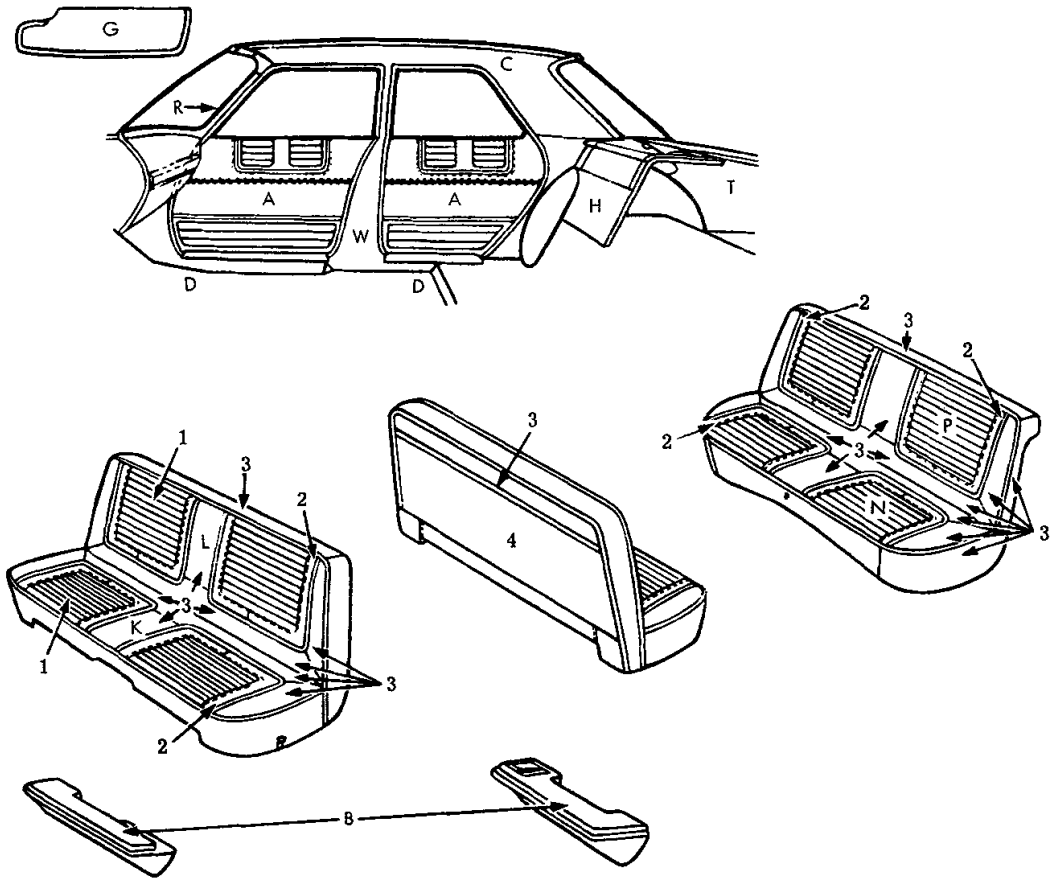

19T0173A

ITEM	TYPE OF MATERIAL	PART TYPE CODE	MAT'L WIDTH	PART NUMBERS AND COLORS BLUE	TURQUOISE	RED	TAN
1	Body Cloth	23-114-2		Not Serviced			
2	Vinyl 35.5 oz.	23-114-15	54"	0464 AB4	0464 AQ8	0464 AR5	0464 AT8
3	Vinyl 35.5 oz.	23-114-15	54"	0441 AB4	0441 AQ4	0441 VR6	0441 VT6
4	Vinyl 21 oz.	23-114-15	56"	*0487 AB8	*0487 AQ8	*0487 AR5	*0487 AT8

ITEM	TYPE OF MATERIAL	PART TYPE CODE	MAT'L WIDTH	PART NUMBERS AND COLORS GOLD			
2	Vinyl 35.5 oz.	23-114-15	54"	0464 AY8			
3	Vinyl 35.5 oz.	23-114-15	54"	0441 AY3			
4	Vinyl 21 oz.	23-114-15	56"	*0487 AY8			

Distribution Drawing Legend Page Appears Following Illustration Section

1965 BELVEDERE II R1-H, R2-H 4 DOOR SEDAN
CLOTH AND VINYL TRIM
CODES H1B, H1Q, H1R, H1T, H1Y

★ Indicates use as required.
⊟ Indicates parts not listed in any previous parts book.
May 1965, Supersedes Sept. 4, 1964.

MyMopar.com

Prices and specifications subject to change without notice.
* Indicates change or addition.
Printed in U.S.A.

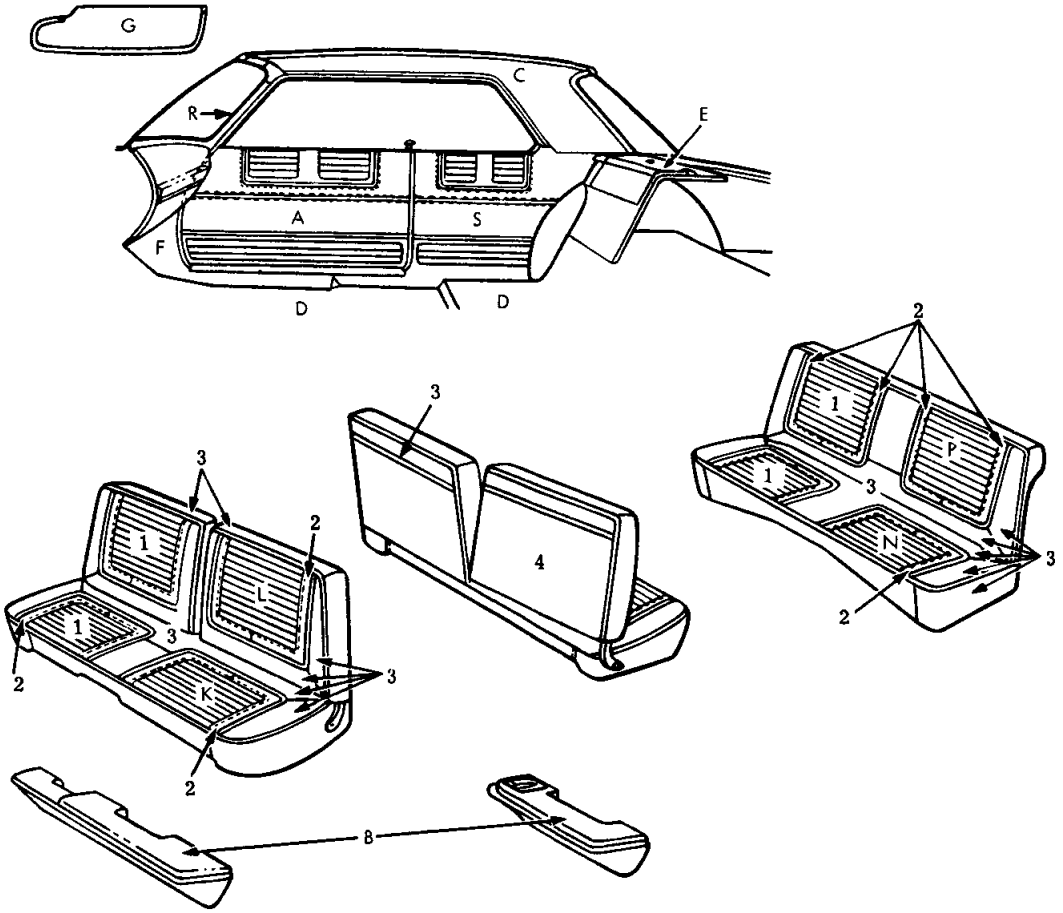

19T0174 A

ITEM	TYPE OF MATERIAL	PART TYPE CODE	MAT'L WIDTH	PART NUMBERS AND COLORS BLUE	TURQUOISE	RED	TAN
1	Body Cloth	23-114-2		Not Serviced			
2	Vinyl 35.5 oz.	23-114-15	54"	0464 AB4	0464 AQ8	0464 AR5	0464 AT8
3	Vinyl 35.5 oz.	23-114-15	54"	0441 AB4	0441 AQ4	0441 VR6	0441 VT6
4	Vinyl 35.5 oz.	23-114-15	54"	*0487 AB8	*0487 AQ8	*0487 AR5	*0487 AT8

ITEM	TYPE OF MATERIAL	PART TYPE CODE	MAT'L WIDTH	PART NUMBERS AND COLORS GOLD			
2	Vinyl 35.5 oz.	23-114-15	54"	0464 AY8			
3	Vinyl 35.5 oz.	23-114-15	54"	0441 AY3			
4	Vinyl 35.5 oz.	23-114-15	54"	*0487 AY8			

Distribution Drawing Legend Page Appears Following Illustration Section

1965 BELVEDERE II R1-H, R2-H 2 DOOR HARDTOP
CLOTH AND VINYL TRIM
CODES H1B, H1Q, H1R, H1T, H1Y

MyMopar.com

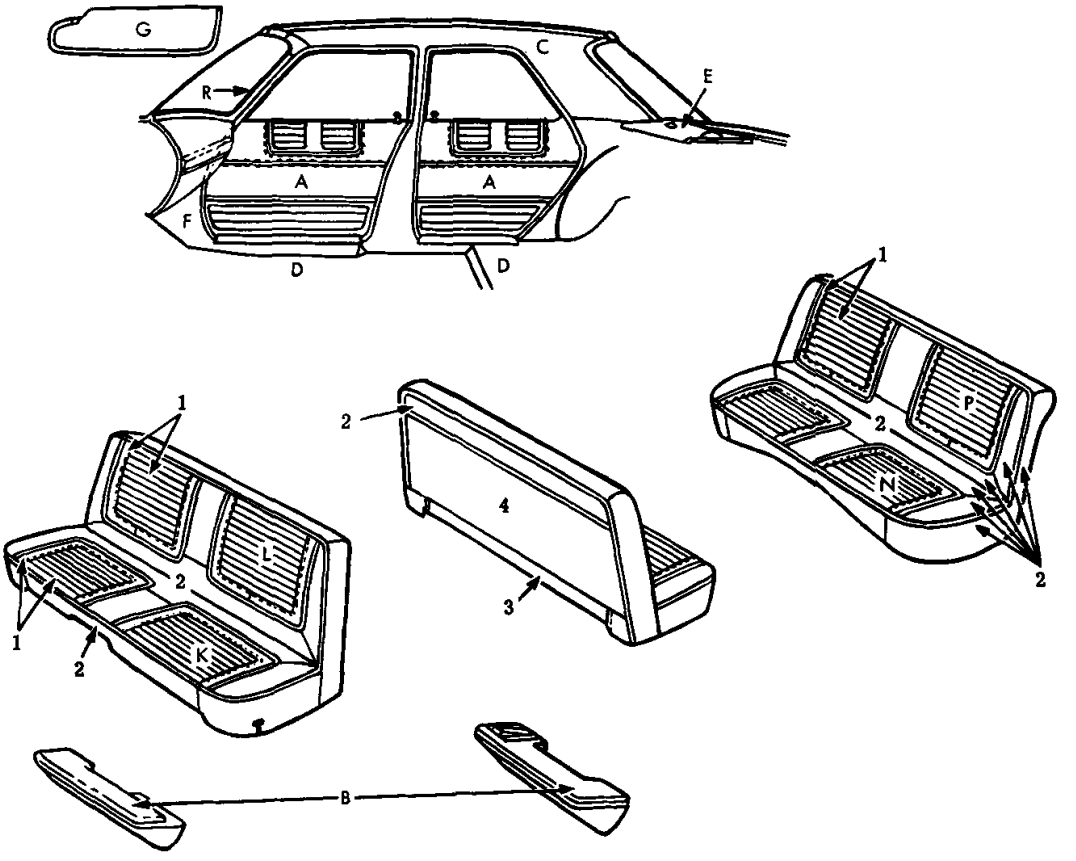

19T0175A

ITEM	TYPE OF MATERIAL	PART TYPE CODE	MAT'L WIDTH	PART NUMBERS AND COLORS BLUE	TURQUOISE	RED	TAN
1	Vinyl	23-114-15		Not Serviced			
2	Vinyl 35.5 oz.	23-114-15	54"	0441 AB4	0441 AQ4	0441 VR6	0441 VT6
3	Vinyl 35.5 oz.	23-114-15	54"	0441 AB8	0441 AQ8	0441 AR5	0441 VT8
4	Vinyl 21 oz.	23-114-15	54"	0487 AB8	0487 AQ8	0487 AR5	0487 AT8

ITEM	TYPE OF MATERIAL	PART TYPE CODE	MAT'L WIDTH	PART NUMBERS AND COLORS GOLD			
2	Vinyl 35.5 oz.	23-114-15	54"	0441 AY3			
3	Vinyl 35.5 oz.	23-114-15	54"	0441 AY8			
4	Vinyl 21 oz.	23-114-15	54"	0487 AY8			

Distribution Drawing Legend Page Appears Following Illustration Section

1965 BELVEDERE II R1-H, R2-H 4 DOOR SEDAN
VINYL TRIM
CODES H4B, H4Q, H4R, H4T, H4Y

MyMopar.com

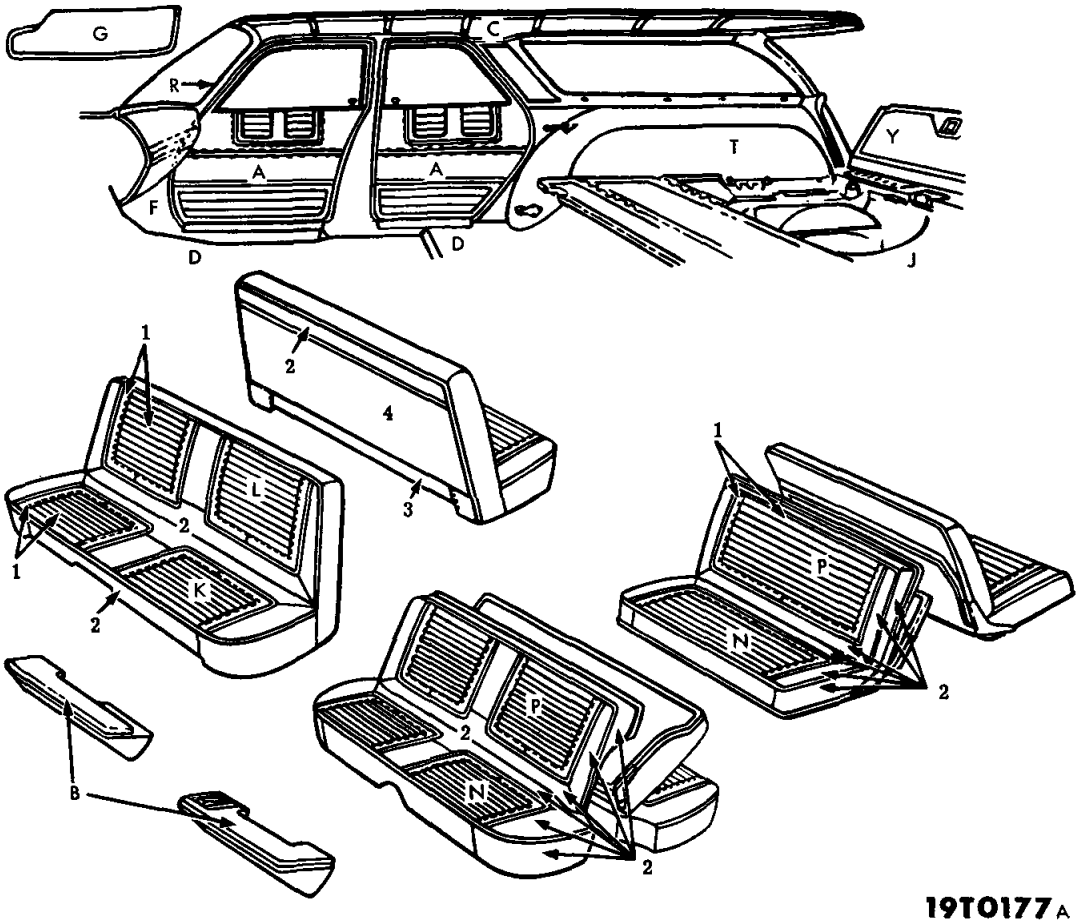

19T0177A

ITEM	TYPE OF MATERIAL	PART TYPE CODE	MAT'L WIDTH	PART NUMBERS AND COLORS BLUE	TURQUOISE	RED	TAN
1	Vinyl 35.5 oz.	23-114-15		Not Serviced			
2	Vinyl 35.5 oz.	23-114-15	54"	0441 AB4	0441 AQ4	0441 VR6	0441 VT6
3	Vinyl 35.5 oz.	23-114-15	54"	0441 AB8	0441 AQ8	0441 AR5	0441 VT8
4	Vinyl 21 oz.	23-114-15	54"	0487 AB8	0487 AQ8	0487 AR5	0487 AT8

ITEM	TYPE OF MATERIAL	PART TYPE CODE	MAT'L WIDTH	PART NUMBERS AND COLORS GOLD			
2	Vinyl 35.5 oz.	23-114-15	54"	0441 AY3			
3	Vinyl 35.5 oz.	23-114-15	54"	0441 AY8			
4	Vinyl 21 oz.	23-114-15	54"	0487 AY8			

Distribution Drawing Legend Page Appears Following Illustration Section

1965 BELVEDERE II R1-H, R2-H STATION WAGON
VINYL TRIM
CODES H4B, H4Q, H4R, H4T, H4X, H4Y

MyMopar.com

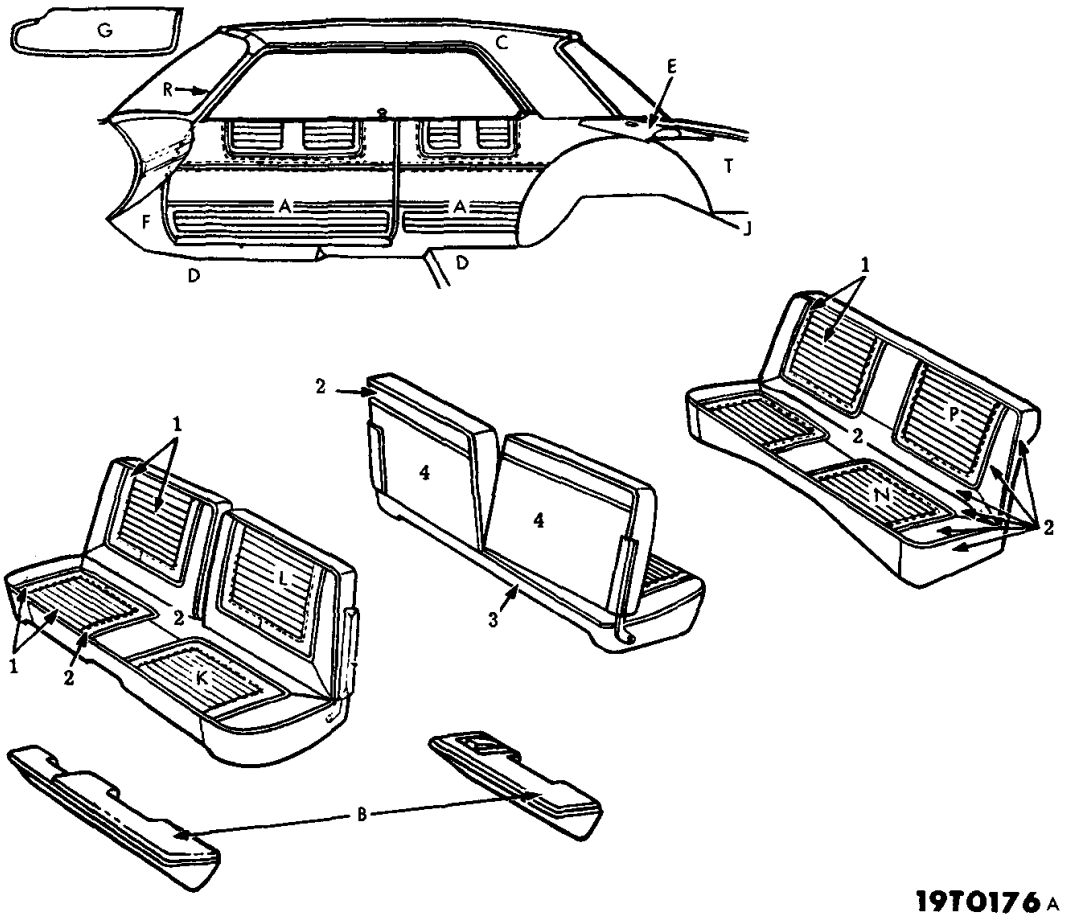

19T0176 A

ITEM	TYPE OF MATERIAL	PART TYPE CODE	MAT'L WIDTH	PART NUMBERS AND COLORS BLUE	TURQUOISE	RED	BLACK
1	Vinyl 35.5	23-114-15		Not Serviced			
2	Vinyl 35.5 oz.	23-114-15	54"	0441 AB4	0441 AQ4	0441 VR6	0441 VX9
3	Vinyl 35.5 oz.	23-114-15	54"	0441 AB8	0441 AQ8	0441 AR5	0441 VX9
4	Vinyl 21 oz.	23-114-15	54"	0487 AB8	0487 AQ8	0487 AR5	0487 AX9

ITEM	TYPE OF MATERIAL	PART TYPE CODE	MAT'L WIDTH	PART NUMBERS AND COLORS GOLD			
2	Vinyl 35.5 oz.	23-114-15	54"	0441 AY3			
3	Vinyl 35.5 oz.	23-114-15	54"	0441 AY8			
4	Vinyl 21 oz.	23-114-15	54"	0487 AY8			

Distribution Drawing Legend Page Appears Following Illustration Section

1965 BELVEDERE II R1-H, R2-H 2 DOOR HARDTOP
VINYL TRIM
CODES H4B, H4Q, H4R, H4T, H4X, H4Y

★ Indicates use as required.
⊟ Indicates parts not listed in any previous parts book.
May 1965, Supersedes Sept. 4, 1964.

Printed in U.S.A.
Prices and specifications subject to change without notice.
* Indicates change or addition.

MyMopar.com

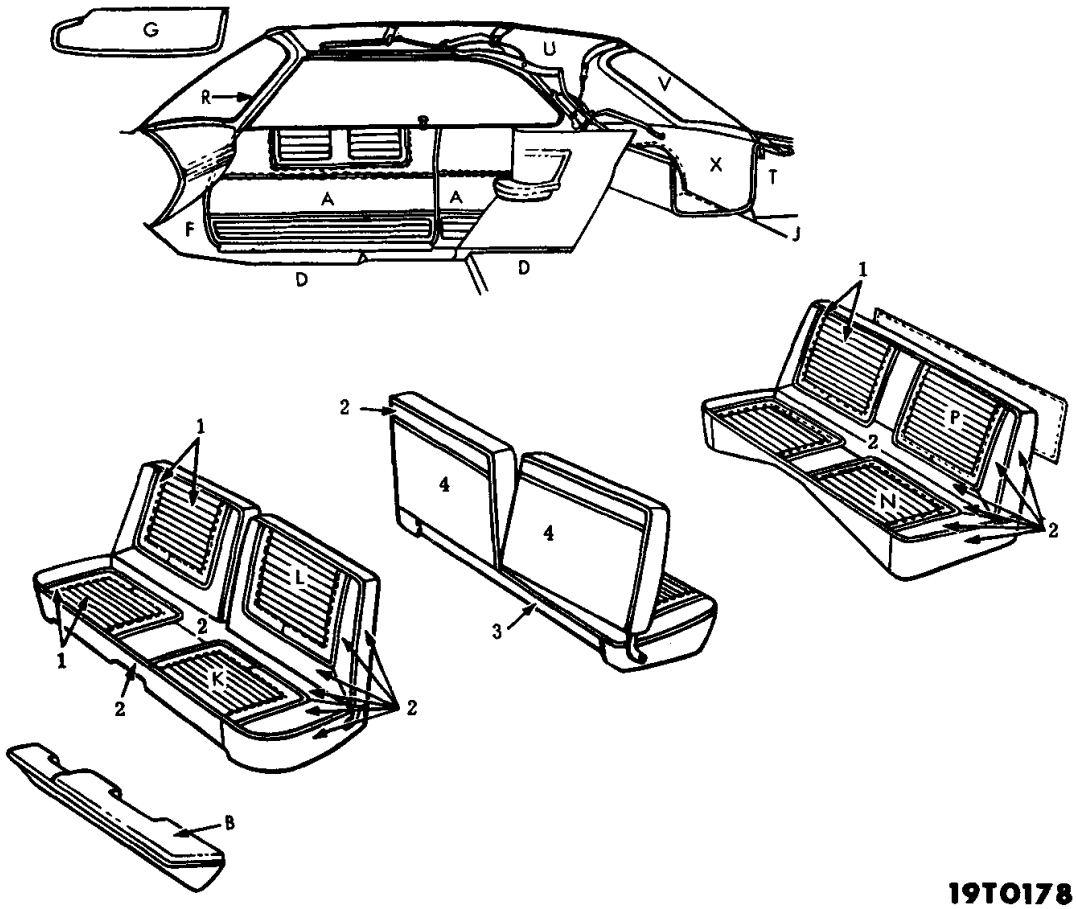

19T0178 A

ITEM	TYPE OF MATERIAL	PART TYPE CODE	MAT'L WIDTH	PART NUMBERS AND COLORS BLUE	TURQUOISE	RED	BLACK
1	Vinyl	23-114-15		Not Serviced			
2	Vinyl 35.5 oz.	23-114-15	54"	0441 AB4	0441 AQ4	0441 VR6	0441 VX9
3	Vinyl 35.5 oz.	23-114-15	54"	0441 AB8	0441 AQ8	0441 AR5	0441 VX9
4	Vinyl 21 oz.	23-114-15	54"	0487 AB8	0487 AQ8	0487 AR5	0487 AX9

ITEM	TYPE OF MATERIAL	PART TYPE CODE	MAT'L WIDTH	PART NUMBERS AND COLORS GOLD			
2	Vinyl 35.5 oz.	23-114-15	54"	0441 AY3			
3	Vinyl 35.5 oz.	23-114-15	54"	0441 AY8			
4	Vinyl 21 oz.	23-114-15	54"	0487 AY8			

Distribution Drawing Legend Page Appears Following Illustration Section

1965 BELVEDERE II R1-H, R2-H CONVERTIBLE
VINYL TRIM
CODES H4B, H4Q, H4R, H4T, H4X, H4Y

★ Indicates use as required.
⊖ Indicates parts not listed in any previous parts book.
* Indicates change or addition.

MyMopar.com

Printed in U.S.A.
Prices and specifications subject to change without notice.
May 1965, Supersedes Sept. 4, 1964.

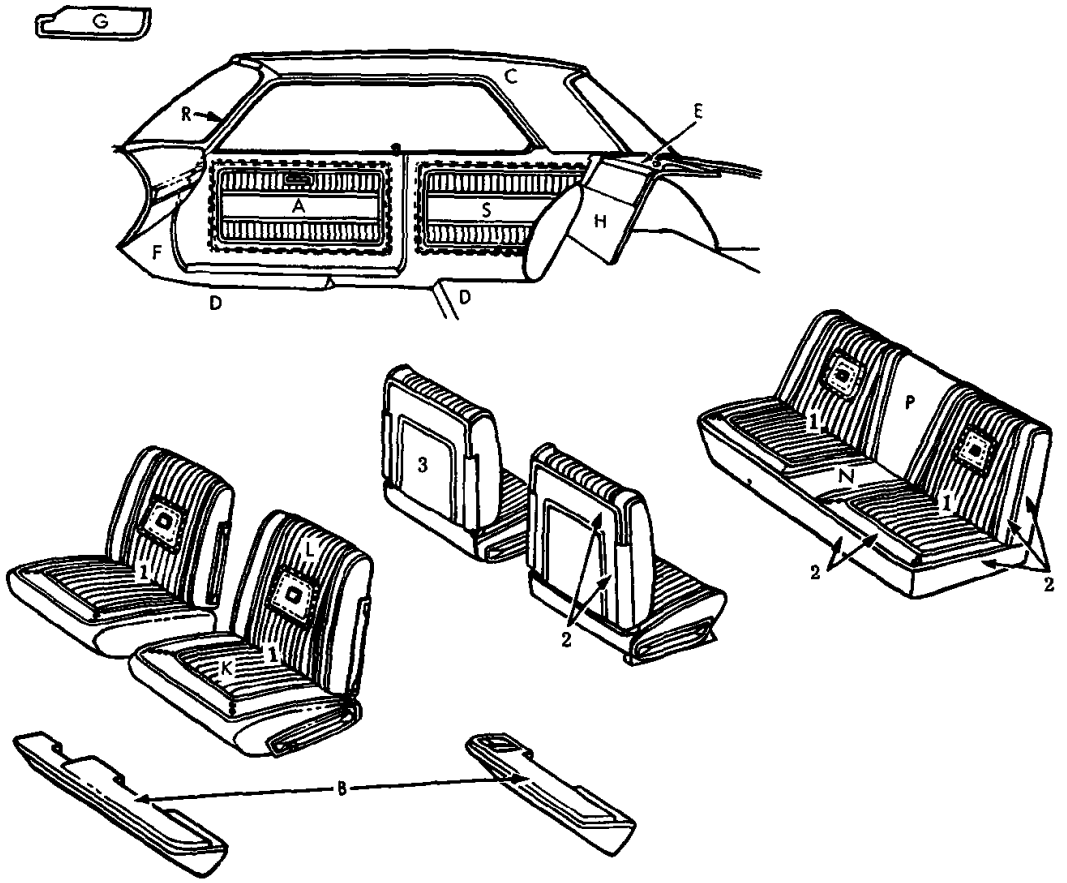

19T0179A

ITEM	TYPE OF MATERIAL	PART TYPE CODE	MAT'L WIDTH	PART NUMBERS AND COLORS BLUE	TURQUOISE	RED	BLACK
1	Vinyl	23-114-15		Not Serviced			
2	Vinyl 35.5 oz.	23-114-15	54"	0441 AB4	0441 AQ4	0441 VR6	0441 VX9
3	Vinyl 35.5 oz.	23-114-15	54"	0441 AB8	0441 AQ8	0441 AR5	0441 VX9

ITEM	TYPE OF MATERIAL	PART TYPE CODE	MAT'L WIDTH	PART NUMBERS AND COLORS GOLD			
2	Vinyl 35.5 oz.	23-114-15	54"	0441 AY3			
3	Vinyl 35.5 oz.	23-114-15	54"	0441 AY8			

Distribution Drawing Legend Page Appears Following Illustration Section

1965 SATELLITE R2-P 2 DOOR HARDTOP
VINYL TRIM
CODES P4B, P4Q, P4R, P4X, P4Y

MyMopar.com

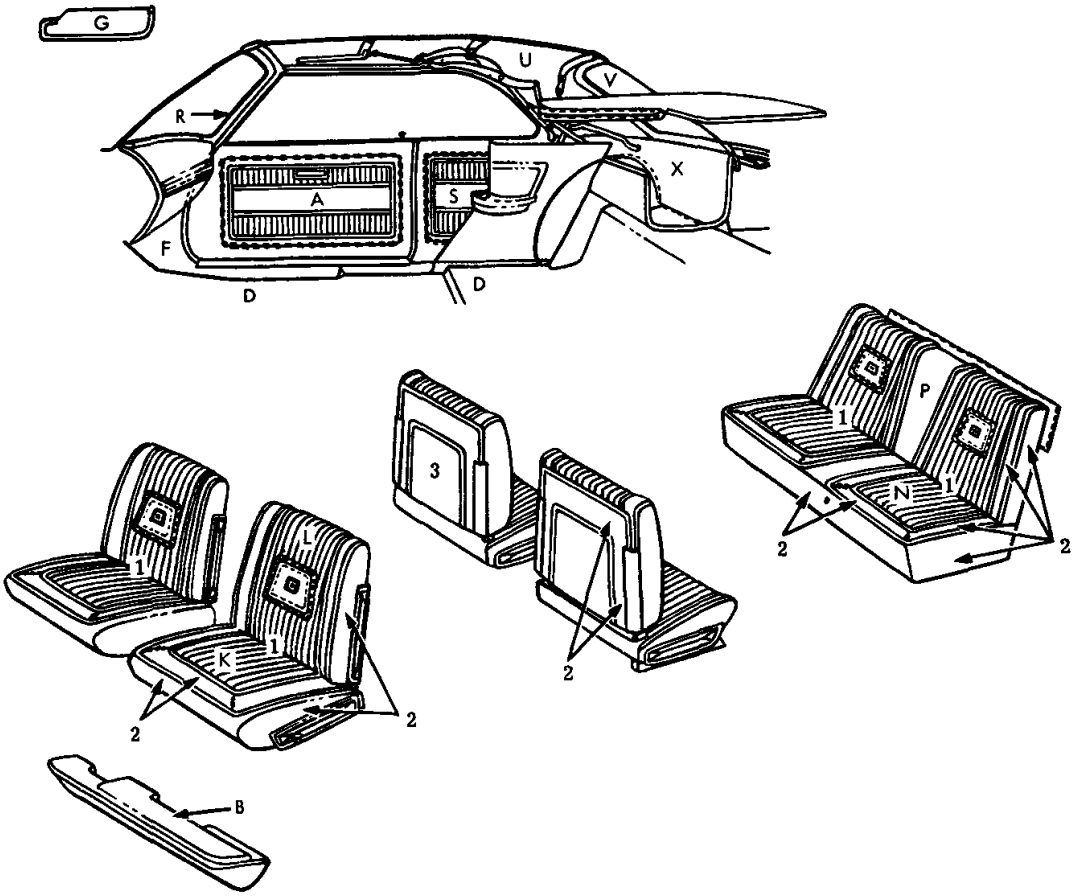

19T0180 A

ITEM	TYPE OF MATERIAL	PART TYPE CODE	MAT'L WIDTH	PART NUMBERS AND COLORS BLUE	TURQUOISE	RED	BLACK
1	Vinyl	23-114-15		Not Serviced			
2	Vinyl 35.5 oz.	23-114-15	54"	0441 AB4	0441 AQ4	0441 VR6	0441 VX9
3	Vinyl 35.5 oz.	23-114-15	54"	0441 AB8	0441 AQ8	0441 AR5	0441 VX9

ITEM	TYPE OF MATERIAL	PART TYPE CODE	MAT'L WIDTH	PART NUMBERS AND COLORS GOLD			
2	Vinyl 35.5 oz.	23-114-15	54"	0441 AY3			
3	Vinyl 35.5	23-114-15	54"	0441 AY8			

Distribution Drawing Legend Page Appears Following Illustration Section

1965 SATELLITE R2-P CONVERTIBLE
VINYL TRIM
CODES P4B, P4Q, P4R, P4X, P4Y

★ Indicates use as required.
B Indicates parts not listed in any previous parts book.
* Indicates change or addition.

Printed in U.S.A.
Prices and specifications subject to change without notice.
May 1965, Supersedes Sept. 4, 1964.

MyMopar.com

1965 PLYMOUTH - A SERIES

Distribution Drawing Legend

See Illustration For Letter Identification

Letter	Description	Code
A	Panel, Door Trim	23-92-5
B	Arm Rest, Door, Front	23-76-3
	Center, Front Seat	23-76-34
	Door, Rear	23-76-59
	Quarter Panel	23-76-66
C	Headlining	23-86-3
D	Floor Cover, Front, Carpet	23-79-3
	Rubber	23-20-8
	Rear, Carpet	23-79-33
	Rubber	23-20-41
E	Panel, Shelf Trim	23-102-3
F	Panel, Cowl Trim	23-91-6
G	Visor	23-103-3
H	Panel, Luggage Compartment Front	23-96-3
J	Cover, Luggage Compartment Floor	23-20-29
K	Cover, Front Seat Cushion	23-108-5
L	Cover, Front Seat Back	23-108-16
M	Cover, Front Seat Hinge	23-108-84
N	Cover, Rear Seat Cushion	23-109-36
P	Cover, Rear Seat Back	23-109-4
Q	Cover, Rear Seat Cushion Bottom Panel	23-109-40
R	Weathercord, Door	23-113-2
	Hinge Pillar	23-113-25
	Lock Pillar	23-113-30
	w/Weatherstrip	23-66-33
S	Panel, Quarter Trim	23-101-3
T	Cover, Wheelhouse	23-96-8
U	Top Deck and Side Quarter	23-112-108
V	Curtain, Folding Top Back	23-112-45
W	Cover, Center Pillar	23-99-4
X	Panel, Folding Top Well Pocket	23-112-153
Y	Cover, Tailgate Inside Panel	23-79-79
Z	Cover, Rear Seat Back Panel	23-109-5

MyMopar.com

BODY CODE	COLUMN LEGEND
	BELVEDERE I (AR1-L) AND (AR2-L)
R-11 (21)	2 D. Sedan
R-13 (41)	4 D. Sedan
R-56 (45)	Station Wagon (2 Seat)
R-83 (41)	4 D. Sedan (Taxi)
R-91 (21)	2 D. Sedan (Police)
R-93 (41)	4 D. Sedan (Police)
R-96 (45)	Station Wagon (Police-2 Seat)
	BELVEDERE II (AR1-H) AND (AR2-H)
R-32 (23)	2 D. Hard Top
R-35 (27)	Convertible
R-33 (41)	4 D. Sedan
R-76 (45)	Station Wagon (2 Seat)
R-77 (46)	Station Wagon (3 Seat)
	SATELLITE (AR2-P)
R-42 (23)	2 D. Hard Top
R-45 (27)	Convertible
	FURY I (AP1-L) AND (AP2-L)
P-11 (21)	2 D. Sedan
P-13 (41)	4 D. Sedan
P-56 (45)	Station Wagon (2 Seat)
P-83 (41)	4 D. Sedan (Taxi)
P-91 (21)	2 D. Sedan (Police)
P-93 (41)	4 D. Sedan
P-96 (45)	Station Wagon (2 Seat)
	FURY II (AP1-M)
P-21 (21)	2 D. Sedan
P-23 (41)	4 D. Sedan
	FURY II (AP2-M)
P-21 (21)	2 D. Sedan
P-23 (41)	4 D. Sedan
P-66 (45)	Station Wagon (2 Seat)
P-67 (46)	Station Wagon (3 Seat)
	FURY III (AP1-H)
P-32 (23)	2 D. Hard Top
P-33 (41)	4 D. Sedan
	FURY III (AP2-H)
P-32 (23)	2 D. Hard Top
P-35 (27)	Convertible
P-33 (41)	4 D. Sedan
P-34 (43)	4 D. Hard Top
P-76 (45)	Station Wagon (2 Seat)
P-77 (46)	Station Wagon (3 Seat)
	SPORT FURY (AP2-P)
P-42 (23)	2 D. Hard Top
P-45 (27)	Convertible

★ Indicates use as required.
B Indicates parts not listed in any previous parts book.

Printed in U.S.A.
Prices and specifications subject to change without notice.
September 4, 1964.

MyMopar.com

CONVERTIBLE TOP COLOR LEGEND

0 Black	2 White	1 Blue

STARTING SERIAL NUMBERS

		Detroit	Los Angeles	Delaware	St. Louis
R1-L	(Belvedere I)	3151-100001	3155-100001		3157-100001
R1-L	(Belvedere I Sta. Wgn.)	3551-100001	3555-100001		3557-100001
R1-H	(Belvedere II)	3351-100001	3355-100001		3357-100001
R1-H	(Belvedere II Sta. Wgn.	3751-100001	3755-100001		3757-100001
R2-L	(Belvedere I)	R151-100001	R155-100001		R157-100001
R2-L	(Belvedere I Sta. Wgn.)	R551-100001	R555-100001		R557-100001
R2-H	(Belvedere II)	R351-100001	R355-100001		R357-100001
R2-H	(Belvedere II Sta. Wgn.)	R751-100001	R755-100001		R757-100001
R2-P	(Satellite)	R451-100001	R455-100001		R457-100001
P1-L	(Fury I)	5152-100001		5156-100001	
P1-L	(Fury I Sta. Wgn.)	5552-100001		5556-100001	
P1-M	(Fury II)	5252-100001		5256-100001	
P1-H	(Fury III)	5352-100001		5356-100001	
P2-L	(Fury I)	P152-100001		P156-100001	
P2-L	(Fury I Sta. Wgn.)	P552-100001		P556-100001	
P2-M	(Fury II)	P252-100001		P256-100001	
P2-M	(Fury II Sta. Wgn.)	P652-100001		P656-100001	
P2-H	(Fury III)	P352-100001		P356-100001	
P2-H	(Fury III Sta. Wgn.)	P752-100001		P756-100001	
P2-P	(Sport Fury)	P452-100001		P456-100001	

TRIM CODE	MODEL	MATERIAL: Cloth	Vinyl	Leather	COLOR	6 W.D. SED.	SED.	4D H.T	STA. WGN.	2D H.T	CV. CP.
L1B, K1B	R1-L, R2-L	★	★	-	Blue	-	★	-	-	-	-
L1R, K1R	R1-L, R2-L	★	★	-	Red	-	★	-	-	-	-
L1T, K1T, L2T, K2T	R1-L, R2-L	★	★	-	Tan	-	★	-	-	-	-
L4B, K4B	R1-L, R2-L	-	★	-	Blue	-	-	-	★	-	-
L4R, K4R	R1-L, R2-L	-	★	-	Red	-	-	-	★	-	-
L4T, K4T	R1-L, R2-L	-	★	-	Tan	-	-	-	★	-	-
L8T, K8T, T8T	R1-L, R2-L	-	★	-	Tan	-	★	-	-	-	-
L5B	R1-L, R2-L	-	★	-	Blue	-	★	-	-	-	-
L5R	R1-L, R2-L	-	★	-	Red	-	★	-	-	-	-
L5T	R1-L, R2-L	-	★	-	Tan	-	★	-	-	-	-
H1B, H4B	R1-H, R2-H	-	★	-	Blue	-	★	-	-	-	-
H1Q, H4Q	R1-H, R2-H	-	★	-	Turquoise	-	★	-	-	-	-
H1R, H4R	R1-H, R2-H	-	★	-	Red	-	★	-	-	-	-
H1T, H4T	R1-H, R2-H	-	★	-	Tan	-	★	-	-	-	-
H4X	R1-H, R2-H	-	★	-	Black	-	-	-	-	★	★
H1Y	R1-H, R2-H	-	★	-	Gold	-	★	-	-	★	★
H4B	R1-H, R2-H	-	★	-	Blue	-	-	-	★	★	★
H4Q	R1-H, R2-H	-	★	-	Turquoise	-	-	-	★	★	★
H4R	R1-H, R2-H	-	★	-	Red	-	-	-	★	★	★
H4T	R1-H, R2-H	-	★	-	Tan	-	-	-	★	-	-
H4Y	R1-H, R2-H	-	★	-	Gold	-	-	-	★	★	★
P4B	R2-P	-	★	-	Blue	-	-	-	-	★	★
P4Q	R2-P	-	★	-	Turquoise	-	-	-	-	★	★
P4R	R2-P	-	★	-	Red	-	-	-	-	★	★
P4X	R2-P	-	★	-	Black	-	-	-	-	★	★
P4Y	R2-P	-	★	-	Gold	-	-	-	-	★	★

★ Indicates use as required.
⊟ Indicates parts not listed in any previous parts book.
September 4, 1964.

Printed in U.S.A.
Prices and specifications subject to change without notice.

MyMopar.com

TRIM CODE	MODEL	MATERIAL Cloth	Vinyl	Leather	COLOR	6 WD.SED	SED.	4D H.T	STA. WGN.	2D H.T	CV. CP.
L1B, K1B	P1-L, P2-L	★	★	-	Blue	-	★	-	-	-	-
L1R, K1R	P1-L, P2-L	★	★	-	Red	-	★	-	-	-	-
L1T, K1T	P1-L, P2-L	★	★	-	Tan	-	★	-	-	-	-
L2T, K2T	P1-L, P2-L	★	★	-	Tan	-	★	-	-	-	-
L4B, K4B	P1-L, P2-L	-	★	-	Blue	-	-	-	★	-	-
L4R, K4R	P1-L, P2-L	-	★	-	Red	-	-	-	★	-	-
L4T, K4T	P1-L, P2-L	-	★	-	Tan	-	-	-	★	-	-
L5B	P1-L, P2-L	-	★	-	Blue	-	★	-	-	-	-
L5R	P1-L, P2-L	-	★	-	Red	-	★	-	-	-	-
L5T	P1-L, P2-L	-	★	-	Tan	-	★	-	-	-	-
L8T, K8T, T8T	P1-L, P2-L	-	★	-	Tan	-	★	-	-	-	-
M1B	P1-M, P2-M	★	★	-	Blue	-	★	-	-	-	-
M1Q	P1-M, P2-M	★	★	-	Turquoise	-	★	-	-	-	-
M1R	P1-M, P2-M	★	★	-	Red	-	★	-	-	-	-
M1T	P1-M, P2-M	★	★	-	Tan	-	★	-	-	-	-
M4B	P1-M, P2-M	-	★	-	Blue	-	-	-	★	-	-
M4Q	P1-M, P2-M	-	★	-	Turquoise	-	-	-	★	-	-
M4R	P1-M, P2-M	-	★	-	Red	-	-	-	★	-	-
M4T	P1-M, P2-M	-	★	-	Tan	-	-	-	★	-	-
M5B	P1-M, P2-M	-	★	-	Blue	-	★	-	-	-	-
M5R	P1-M, P2-M	-	★	-	Red	-	★	-	-	-	-
M5T	P1-M, P2-M	-	★	-	Tan	-	★	-	-	-	-
H1B	P1-H, P2-H	★	★	-	Blue	-	★	-	-	-	-
H1Q	P1-H, P2-H	★	★	-	Turquoise	-	★	-	-	-	-
H1R	P1-H, P2-H	★	★	-	Red	-	★	-	-	-	-
H1T	P1-H, P2-H	★	★	-	Tan	-	★	-	-	-	-
H1Y	P1-H, P2-H	★	★	-	Gold	-	★	-	-	-	-
H1B	P2-H	★	★	-	Blue	-	-	★	-	-	-
H1Q	P2-H	★	★	-	Turquoise	-	-	★	-	-	-
H1R	P2-H	★	★	-	Red	-	-	★	-	-	-
H1T	P2-H	★	★	-	Tan	-	-	★	-	-	-
H1Y	P2-H	★	★	-	Gold	-	-	★	-	-	-
H2B	P2-H	★	★	-	Blue	-	-	-	-	★	-
H2Q	P2-H	★	★	-	Turquoise	-	-	-	-	★	-
H2R	P2-H	★	★	-	Red	-	-	-	-	★	-
H2T	P2-H	★	★	-	Tan	-	-	-	-	★	-
H2Y	P2-H	★	★	-	Gold	-	-	-	-	★	-
H5B	P1-H, P2-H	-	★	-	Blue	-	★	-	-	★	-
H5Q	P1-H, P2-H	-	★	-	Turquoise	-	★	-	-	★	-
H5R	P1-H, P2-H	-	★	-	Red	-	★	-	-	★	-
H5X	P1-H, P2-H	-	★	-	Black	-	★	-	-	★	-
H5Y	P1-H, P2-H	-	★	-	Gold	-	★	-	-	★	-
H5B	P2-H	-	★	-	Blue	-	-	★	-	-	★
H5Q	P2-H	-	★	-	Turquoise	-	-	★	-	-	★
H5R	P2-H	-	★	-	Red	-	-	★	-	-	★
H5X	P2-H	-	★	-	Black	-	-	★	-	-	★
H5Y	P2-H	-	★	-	Gold	-	-	★	-	-	★
H4B	P2-H	-	★	-	Blue	-	-	-	★	-	-
H4Q	P2-H	-	★	-	Turquoise	-	-	-	★	-	-
H4R	P2-H	-	★	-	Red	-	-	-	★	-	-
H4T	P2-H	-	★	-	Tan	-	-	-	★	-	-
H4Y	P2-H	-	★	-	Gold	-	-	-	★	-	-
P4B	P2-P	-	★	-	Blue	-	-	-	-	★	★
P4Q	P2-P	-	★	-	Turquoise	-	-	-	-	★	★
P4R	P2-P	-	★	-	Red	-	-	-	-	★	★
P4U	P2-P	-	★	-	Black & Copper	-	-	-	-	★	★
P4X	P2-P	-	★	-	Black	-	-	-	-	★	★
P4Y	P2-P	-	★	-	Gold	-	-	-	-	★	★

★ Indicates use as required.
B Indicates parts not listed in any previous parts book.

Printed in U.S.A.
Prices and specifications subject to change without notice.
September 4, 1964.

MyMopar.com

NOTE: RIGHT HAND AND LEFT HAND PARTS LISTED ON THE SAME LINE. Whenever right and left hand parts are identified by consecutive part numbers, they will be listed as in the following example: PANEL, Door Trim 3182-3 ABB
Interpreted, this indicates that Panel, right is Part No. 3182 ABB and Panel, left is Part No. 3183 ABB.

	CODE	REMARKS	PER CAR	SED.	4D H.T	STA. WGN.	2D H.T	CV. CP.
23-71-1	CARPET and FOUNDATION, Floor Console Side R2-P (panel)							
	(code P4B)	Right	1	---- ---	---- ---	---- ---	6917 AB8	6917 AB8
		Left	1	---- ---	---- ---	---- ---	6920 AB8	6920 AB8
	(code P4Q)	Right	1	---- ---	---- ---	---- ---	6917 AQ8	6917 AQ8
		Left	1	---- ---	---- ---	---- ---	6920 AQ8	6920 AQ8
	(code P4R)	Right	1	---- ---	---- ---	---- ---	6917 AR7	6917 AR7
		Left	1	---- ---	---- ---	---- ---	6920 AR7	6920 AR7
	(code P4X)	Right	1	---- ---	---- ---	---- ---	6917 AX8	6917 AX8
		Left	1	---- ---	---- ---	---- ---	6920 AX8	6920 AX8
	(code P4Y)	Right	1	---- ---	---- ---	---- ---	6917 AY3	6917 AY3
		Left	1	---- ---	---- ---	---- ---	6920 AY3	6920 AY3
	(carpet) Side and Rear							
	(code P4B)		1	---- ---	---- ---	---- ---	*7301 AB8	*7301 AB8
	(code P4Q)		1	---- ---	---- ---	---- ---	7368 AQ8	7368 AQ8
	(code P4R)		1	---- ---	---- ---	---- ---	7368 AR7	7368 AR7
	(code P4X)		1	---- ---	---- ---	---- ---	7368 AX8	7368 AX8
	(code P4Y)		1	---- ---	---- ---	---- ---	7368 AY3	7368 AY3
	P2-P (carpet) (side front)	Left						
	(code P4B)		1	---- ---	---- ---	---- ---	6925 AB8	6925 AB8
	(code P4Q)		1	---- ---	---- ---	---- ---	6925 AQ8	6925 AQ8
	(code P4R)		1	---- ---	---- ---	---- ---	6925 AR7	6925 AR7
	(codes P4X, P4U)		1	---- ---	---- ---	---- ---	6925 AX8	6925 AX8
	(code P4Y)		1	---- ---	---- ---	---- ---	6925 AY3	6925 AY3
	(code P4B)		1	---- ---	---- ---	---- ---	7370 AB8	7370 AB8
	(code P4Q)		1	---- ---	---- ---	---- ---	7370 AQ8	7370 AQ8
	(code P4R)		1	---- ---	---- ---	---- ---	7370 AR7	7370 AR7
	(code P4Y)		1	---- ---	---- ---	---- ---	7370 AY8	7370 AY8
	(codes P4X, P4U)		1	---- ---	---- ---	---- ---	7370 AX8	7370 AX8
	(side rear)							
	(code P4B)		1	---- ---	---- ---	---- ---	*7301 AB8	*7301 AB8
	(code P4Q)		1	---- ---	---- ---	---- ---	7368 AQ8	7368 AQ8
	(code P4R)		1	---- ---	---- ---	---- ---	7368 AR7	7368 AR7
	(codes P4X, P4U)		1	---- ---	---- ---	---- ---	7368 AX8	7368 AX8
	(code P4Y)		1	---- ---	---- ---	---- ---	7368 AY8	7368 AY8
	Fastener		★	---- ---	---- ---	---- ---	6001 560	6001 560
	P2-P	Right						
	(code P4B)		1	---- ---	---- ---	---- ---	7366 AB8	7366 AB8
	(code P4Q)		1	---- ---	---- ---	---- ---	7366 AQ8	7366 AQ8
	(code P4R)		1	---- ---	---- ---	---- ---	7366 AR7	7366 AR7
	(code P4Y)		1	---- ---	---- ---	---- ---	7366 AY8	7366 AY8
	(codes P4X, P4U)		1	---- ---	---- ---	---- ---	7366 AX8	7366 AX8
		Left						
	(code P4B)		1	---- ---	---- ---	---- ---	7371 AB8	7371 AB8
	(code P4Q)		1	---- ---	---- ---	---- ---	7371 AQ8	7371 AQ8
	(code P4R)		1	---- ---	---- ---	---- ---	7371 AR7	7371 AR7
	(code P4Y)		1	---- ---	---- ---	---- ---	7371 AY8	7371 AY8
	(codes P4X, P4U)		1	---- ---	---- ---	---- ---	7371 AX8	7371 AX8

★ Indicates use as required.
B Indicates parts not listed in any previous parts book.
April 1966, Supersedes May 1965.

MyMopar.com

Printed in U.S.A.
Prices and specifications subject to change without notice.
Right and left part numbers are on same line, first number is right, second number is left.
* Indicates change or addition.

CODE	REMARKS	PER CAR	SED.	4D H.T	STA. WGN.	2D H.T	CV. CP.
23-71-1	CARPET and FOUNDATION, Floor Console Side - Cont'd P2-P						
	(side carpet - formed) (floor mounted shift)						
	(code P4B)	1	---- ---	---- ---	---- ---	7383 AB8	7383 AB8
	(code P4Q)	1	---- ---	---- ---	---- ---	7383 AQ8	7383 AQ8
	(code P4R)	1	---- ---	---- ---	---- ---	7383 AR7	7383 AR7
	(code P4Y)	1	---- ---	---- ---	---- ---	7383 AY8	7383 AY8
	(codes P4X, P4U)	1	---- ---	---- ---	---- ---	7383 AX8	7383 AX8
	(carpet - formed) (4 speed trans. w/console)						
	(code P4B)	1	---- ---	---- ---	---- ---	4434 AB8	4434 AB8
	(code P4Q)	1	---- ---	---- ---	---- ---	4434 AQ8	4434 AQ8
	(code P4R)	1	---- ---	---- ---	---- ---	4434 AR7	4434 AR7
	(code P4Y)	1	---- ---	---- ---	---- ---	4434 AY8	4434 AY8
	(codes P4X, P4U)	1	---- ---	---- ---	---- ---	4434 AX8	4434 AX8
	Fastener	5	---- ---	---- ---	---- ---	*6002 072	*6002 072
	COVER, Console Side (floor mounted shift) P2-P (plastic)	1	---- ---	---- ---	---- ---	2572 543	2572 543
23-71-3	LID, Console R2-P						
	(code P4B)	1	---- ---	---- ---	---- ---	4460 AB4	4460 AB4
	(code P4Q)	1	---- ---	---- ---	---- ---	4460 AQ4	4460 AQ4
	(code P4R)	1	---- ---	---- ---	---- ---	4460 AR6	4460 AR6
	(code P4X)	1	---- ---	---- ---	---- ---	4460 AX9	4460 AX9
	(code P4Y)	1	---- ---	---- ---	---- ---	4460 AY3	4460 AY3
	P2-P						
	(code P4B)	1	---- ---	---- ---	---- ---	4460 AB8	4460 AB8
	(code P4Q)	1	---- ---	---- ---	---- ---	4460 AQ8	4460 AQ8
	(code P4R)	1	---- ---	---- ---	---- ---	4460 AR7	4460 AR7
	(codes P4U, P4X)	1	---- ---	---- ---	---- ---	4460 AX9	4460 AX9
	(code P4Y)	1	---- ---	---- ---	---- ---	4460 AY3	4460 AY3
23-71-7	COVER, Console Floor Pan Filler R2-P						
	(code P4B)	1	---- ---	---- ---	---- ---	4832 VB8	4832 VB8
	(code P4Q)	1	---- ---	---- ---	---- ---	4832 VQ8	4832 VQ8
	(code P4R)	1	---- ---	---- ---	---- ---	4832 AR7	4832 AR7
	(code P4X)	1	---- ---	---- ---	---- ---	4832 AX8	4832 AX8
	(code P4Y)	1	---- ---	---- ---	---- ---	4832 AY3	4832 AY3
	P2-P						
	(code P4R)	1	---- ---	---- ---	---- ---	4832 AR7	4832 AR7
	(code P4X)	1	---- ---	---- ---	---- ---	4832 AX8	4832 AX8
	(code P4Y)	1	---- ---	---- ---	---- ---	4832 AY3	4832 AY3
23-76-9	BASE, Door and Quarter Arm Rest R1, R2 (short)						
	(codes L1B, K1B, L4B, K4B, L5B)	1	1208-9 AB4	---- ---	1208-9 AB4		
	(codes L1R, K1R, L5R, L4R, K4R)	1	1208-9 VR6	---- ---	1208-9 VR6		
	(codes L1T, K1T, L5T, L4T, K4T, L2T, K2T, L8T, K8T, T8T)	1	1208-9 VT6	---- ---	1208-9 VT6		
	R1-H, R2-H (short) (chrome)	1	1208-9 VZ1	---- ---	1208-9 VZ1		
	P1-L, P2-L (short) (chrome)	1	1208-9 VZ1	---- ---	1208-9 VZ1		

★ Indicates use as required.
⊟ Indicates parts not listed in any previous parts book.
Right and left part numbers are on same line, first number is right, second number is left.
* Indicates change or addition.

Printed in U.S.A.
Prices and specifications subject to change without notice.
April 1966, Supersedes May 1965.

MyMopar.com

CODE	REMARKS	PER CAR	SED.	4D H.T	STA. WGN.	2D H.T	CV. CP.
23-76-9	BASE, Front Door Arm Rest						
	R1, R2 (long)						
	(chrome)	1	---- ---	---- ---	---- ---	1212-3 VZ1	1212-3 VZ1
	P1-H, P2-H, P2-P (long)						
	(chrome)	1	1212-3 VZ1	1212-3 VZ1	1212-3 VZ1	1212-3 VZ1	1212-3 VZ1
	P1, P2 (medium)						
	(chrome)	1	1210-1 VZ1	---- ---	1210-1 VZ1		
	BASE, Rear Quarter Arm Rest						
	R1, R2 (short)						
	(codes L1B, K1B)	1	1208-9 AB4				
	(codes L1R, K1R)	1	1208-9 VR6				
	(codes L1T, K1T, L2T, K2T, L8T, K8T)	1	1208-9 VT6				
	R1-H, R2-H (short)						
	(chrome)	1	---- ---	---- ---	---- ---	1208-9 VZ1	
	P1, P2 (short)						
	(chrome)	1	1208-9 VZ1	---- ---	---- ---	1208-9 VZ1	
	R2-P (medium)						
	(chrome)	1	---- ---	---- ---	---- ---	1210-1 VZ1	
	P1-H, P2-H, P2-P (medium)						
	(chrome)	1	---- ---	---- ---	---- ---	1210-1 VZ1	
	BASE, Rear Door Arm Rest						
	R1, R2 (short)						
	(codes L1B, K1B, L4B, K4B, L5B)	1	1208-9 AB4	---- ---	1208-9 AB4		
	(codes L1R, K1R, L5R, L4R, K4R)	1	1208-9 VR6	---- ---	1208-9 VR6		
	(codes L1T, K1T, L5T, L4T, K4T, L2T, K2T, L8T, K8T, T8T)	1	1208-9 VT6	---- ---	1208-9 VT6		
	R1-H, R2-H (short)						
	(chrome)	1	1208-9 VZ1	---- ---	1208-9 VZ1		
	P1, P2 (short)						
	(chrome)	1	1208-9 VZ1	1208-9 VZ1	1208-9 VZ1		
23-76-11	PAD and PLATE, Front Door Arm Rest (w/o ash receiver)						
	R1, R2 (short)						
	(codes L1B, K1B, L5B, L4B, K4B, H1B, H4B)	1	1216-7 AB4	---- ---	1216-7 AB4		
	(codes H1Q, H4Q)	1	1216-7 AQ4	---- ---	1216-7 AQ4		
	(codes H1Y, H4Y)	1	1216-7 AY3	---- ---	1216-7 AY3		
	(codes L1R, K1R, L5R, L4R, K4R, H1R, H4R)	1	1216-7 VR6	---- ---	1216-7 VR6		
	(codes L1T, K1T, L8T, K8T, T8T, L2T, K2T, L5T, L4T, K4T, H1T, H4T)	1	1216-7 VT6	---- ---	1216-7 VT6		
	P1, P2 (short) (w/o ash receiver)						
	(codes L1B, K1B, L4B, K4B, L5B)	1	1216-7 AB8	---- ---	1216-7 AB8		
	(codes L1R, K1R, L4R, K4R, L5R)	1	1216-7 AR7	---- ---	1216-7 AR7		
	(codes L1T, K1T, L2T, K2T, L8T, K8T, T8T, L4T, K4T, L5T)	1	1216-7 AT8	---- ---	1216-7 AT8		

★ Indicates use as required.
B Indicates parts not listed in any previous parts book.

Printed in U.S.A.
Prices and specifications subject to change without notice.
Right and left part numbers are on same line, first number is right, second number is left.
* Indicates change or addition.

MyMopar.com

CODE	REMARKS	PER CAR	SED.	4D H.T	STA. WGN.	2D H.T	CV. CP.
23-76-11	PAD and PLATE, Front Door Arm Rest - Cont'd						
	R1-H, R2-H (medium and long)						
	(codes H1B, H4B)	1	---- ---	---- ---	---- ---	1222-3 AB4	1222-3 AB4
	(codes H1Q, H4Q)	1	---- ---	---- ---	---- ---	1222-3 AQ4	1222-3 AQ4
	(codes H1R, H4R)	1	---- ---	---- ---	---- ---	1222-3 VR6	1222-3 VR6
	(code H1T)	1	---- ---	---- ---	---- ---	1222-3 VT6	
	(code H4X)	1	---- ---	---- ---	---- ---	1222-3 VX9	1222-3 VX9
	(codes H1Y, H4Y)	1	---- ---	---- ---	---- ---	1222-3 AY3	1222-3 AY3
	R2-P						
	(code P4B)	1	---- ---	---- ---	---- ---	*1222-3 AB4	*1222-3 AB4
	(code P4Q)	1	---- ---	---- ---	---- ---	1222-3 AQ8	1222-3 AQ8
	(code P4R)	1	---- ---	---- ---	---- ---	*1222-3 VR6	*1222-3 VR6
	(code P4X)	1	---- ---	---- ---	---- ---	1222-3 VX9	1222-3 VX9
	(code P4Y)	1	---- ---	---- ---	---- ---	1222-3 VY5	1222-3 VY5
	(codes H1Y, H2Y, H4Y, H5Y)	1	1222-3 AY3	1222-3 AY3	1222-3 AY3	1222-3 AY3	1222-3 AY3
	(code H5X)	1	1222-3 VX9	1222-3 VX9	---- ---	1222-3 VX9	1222-3 VX9
	P2-P (medium and long)						
	(code P4B)	1	---- ---	---- ---	---- ---	1222-3 AB8	1222-3 AB8
	(code P4Q)	1	---- ---	---- ---	---- ---	1222-3 AQ8	1222-3 AQ8
	(code P4R)	1	---- ---	---- ---	---- ---	1222-3 VR7	1222-3 VR7
	(codes P4X, P4U)	1	---- ---	---- ---	---- ---	1222-3 VX9	1222-3 VX9
	(code P4Y)	1	---- ---	---- ---	---- ---	1222-3 AY3	1222-3 AY3
	P1, P2 (medium and long) (w/o ash receiver)						
	(codes M1B, M4B, M5B, H1B, H2B, H4B, H5B)	1	1222-3 AB4	1222-3 AB4	1222-3 AB4	1222-3 AB4	1222-3 AB4
	(codes M1Q, M4Q, H1Q, H2Q, H4Q, H5Q)	1	1222-3 AQ4	1222-3 AQ4	1222-3 AQ4	1222-3 AQ4	1222-3 AQ4
	(codes M1R, M4R, M5R, H1R, H2R, H4R, H5R)	1	1222-3 VR7	1222-3 VR7	1222-3 VR7	1222-3 VR7	1222-3 VR7
	(codes M1T, M4T, M5T, H1T, H2T, H4T)	1	1222-3 VT6	1222-3 VT6	1222-3 VT6	1222-3 VT6	1222-3 VT6
23-76-16	NUT, Door and Quarter Arm Rest Attaching R1, R2, P1, P2	4	1280 134	1280 134	1280 134		
23-76-63	PAD and PLATE, Rear Door Arm Rest (w/ash receiver)						
	R1, R2						
	(codes L1B, K1B, L5B, L4B, K4B, H1B, H4B)	1	1214-5 AB4	---- ---	1214-5 AB4		
	(codes H1Q, H4Q)	1	1214-5 AQ4	---- ---	1214-5 AQ4		
	(codes L1R, K1R, L5R, L4R, K4R, H1R, H4R)	1	1214-5 VR6	---- ---	1214-5 VR6		
	(codes L1T, K1T, L2T, K2T, L8T, K8T, T8T, L5T, L4T, K4T, H1T, H4T)	1	1214-5 VT6	---- ---	1214-5 VT6		
	(codes H1Y, H4Y)	1	1214-5 AY3	---- ---	1214-5 AY3		
	P1, P2 (short)						
	(codes L1B, K1B, L4B, K4B, L5B)	1	1214-5 AB8	---- ---	1214-5 AB8		
	(codes M1B, M5B, M4B, H1B, H4B, H5B)	1	1214-5 AB4	1214-5 AB4	1214-5 AB4		
	(codes M1Q, M4Q, H1Q, H4Q, H5Q)	1	1214-5 AQ4	1214-5 AQ4	1214-5 AQ4		

★ Indicates use as required.
⊟ Indicates parts not listed in any previous parts book.
Right and left part numbers are on same line, first number is right, second number is left.
* Indicates change or addition.

MyMopar.com

Printed in U.S.A.
Prices and specifications subject to change without notice.
April 1966, Supersedes May 1965.

CODE	REMARKS	PER CAR	SED.	4D H.T	STA. WGN.	2D H.T	CV. CP.
23-76-63	PAD and PLATE, Rear Door Arm Rest - Cont'd (w/ash receiver)						
	P1, P2 (short)						
	(codes L1R, K1R, L4R, L5R, K4R, M1R, M5R, M4R, H1R, H4R, H5R)	1	1214-5 AR7	1214-5 AR7	1214-5 AR7		
	(codes L1T, K1T, L2T, K2T, L8T, K8T, T8T, L4T, K4T, L5T)	1	1214-5 AT8	---- ---	1214-5 AT8		
	(codes M1T, M4T, M5T, H1T, H4T)	1	1214-5 VT6	---- ---	1214-5 VT6		
	(codes H1Y, H4Y, H5Y)	1	1214-5 AY3	---- ---	1214-5 AY3		
	(code H5X)	1	1214-5 VX9	---- ---	1214-5 VX9		
23-76-76	PAD and PLATE, Rear Quarter Arm Rest (w/ash receiver)						
	P1, P2 (short)						
	(codes L1B, K1B)	1	1214-5 AB8				
	(code M1B)	1	1214-5 AB4				
	(code M1Q)	1	1214-5 AQ4				
	(codes L1R, K1R, M1R)	1	1214-5 AR7				
	(codes L1T, K1T, L2T, K2T, L8T, K8T)	1	1214-5 AT8				
	(code M1T)	1	1214-5 VT6				
	R1, R2						
	(codes L1B, K1B, H1B, H4B)	1	1214-5 AB4	---- ---	---- ---	1214-5 AB4	
	(codes H1Q, H4Q)	1	1214-5 AQ4	---- ---	---- ---	1214-5 AQ4	
	(codes L1R, K1R, H1R, H4R)	1	1214-5 VR6	---- ---	---- ---	1214-5 VR6	
	(codes L1T, K1T, L2T, K2T, L8T, K8T, H1T, H4T)	1	1214-5 VT6	---- ---	---- ---	1214-5 VT6	
	(codes H1Y, H4Y)	1	1214-5 AY3	---- ---	---- ---	1214-5 AY3	
	(code H4X)	1	1214-5 VX9	---- ---	---- ---	1214-5 VX9	
	R-P						
	(code P4B)	1	---- ---	---- ---	---- ---	*1224-5 AB8	
	(code P4Q)	1	---- ---	---- ---	---- ---	*1224-5 AQ8	
	(code P4R)	1	---- ---	---- ---	---- ---	*1224-5 AR5	
	(code P4Y)	1	---- ---	---- ---	---- ---	*1224-5 AY3	
	P1-H, P2-H, P2-P (pad w/ash receiver)						
	(codes H2B, H5B)	1	---- ---	---- ---	---- ---	1224-5 AB4	
	(code P4B)	1	---- ---	---- ---	---- ---	1224-5 AB8	
	(codes H2Q, H5Q)	1	---- ---	---- ---	---- ---	1224-5 AQ4	
	(code P4Q)	1	---- ---	---- ---	---- ---	1224-5 AQ8	
	(codes H2R, H5R, P4R)	1	---- ---	---- ---	---- ---	*1224-5 AR7	
	(codes H2Y, H5Y, P4Y)	1	---- ---	---- ---	---- ---	*1224-5 AY3	
	(code H2T)	1	---- ---	---- ---	---- ---	1224-5 VT6	
	(codes H5X, P4X, P4U)	1	---- ---	---- ---	---- ---	1224-5 VX9	
	Screw	4	161 904	---- ---	---- ---	161 904	
23-77-3	STRAP, Assist						
	R1-L, R2-L, P1, P2						
	(code T8T)	2	4312 AT6				
	Bolt	2	*6025 693				
	Eyelet	2	6000 272				
23-77-8	COVER, Tailgate Assist Strap Joint						
	P2 (inner)	1	---- ---	---- ---	*2656 704		
	(outer)	1	---- ---	---- ---	*2656 702		

★ Indicates use as required.
⊟ Indicates parts not listed in any previous parts book.

MyMopar.com

Printed in U.S.A.
Prices and specifications subject to change without notice.
Right and left part numbers are on same line, first number is right, second number is left.
* Indicates change or addition.

CODE	REMARKS	PER CAR	SED.	4D H.T	STA. WGN.	2D H.T	CV. CP.
23-77-9	BRACKET, Tailgate Assist Strap P2	1	---- ---	---- ---	*2656 703		
23-77-17	SPACER, Center Pillar Assist Strap Mldg. R1-L, R2-L	2	2292 201				
23-79-3	CARPET, Front Floor R1-H, R2-H						
	(codes H1B, H5B)	1	*2807 530	---- ---	*2807 530	*2807 530	*2807 530
	(codes H1Q, H4Q)	1	1730 VQ8	---- ---	1730 VQ8	1730 VQ8	1730 VQ8
	(codes H1R, H4R)	1	1730 AR7	---- ---	1730 AR7	1730 AR7	1730 AR7
	(codes H1T, H4T)	1	1730 VT8	---- ---	1730 VT8	1730 VT8	1730 VT8
	(codes H1Y, H4Y)	1	1730 AY3	---- ---	1730 AY3	1730 AY3	1730 AY3
	(code H4X)	1	---- ---	---- ---	---- ---	1730 AX8	1730 AX8
	(manual 4 speed trans.)(floor mounted shift)						
	(codes L1R, L4R, L5R, H1R, H4R)	1	1734 AR7	---- ---	1734 AR7	1734 AR7	1734 AR7
	(codes H1Y, H4Y)	1	*1734 AY3	---- ---	*1734 AY3	*1734 AY3	*1734 AY3
	(code H4X)	1	1734 AX8	---- ---	1734 AX8	1734 AX8	1734 AX8
	(codes L1B, L4B, L5B, H1B, H4B)	1	1734 VB8	---- ---	1734 VB8	1734 VB8	1734 VB8
	(codes H1Q, H4Q)	1	1734 VQ8	---- ---	1734 VQ8	1734 VQ8	1734 VQ8
	(codes L1T, L2T, L4T, L8T, L5T, H1T, H4T)	1	1734 VT8	---- ---	1734 VT8	1734 VT8	1734 VT8
	R2-P (bucket seat w/console)						
	(code P4B)	1	---- ---	---- ---	---- ---	1748 VB8	1748 VB8
	(code P4Q)	1	---- ---	---- ---	---- ---	1748 VQ8	1748 VQ8
	(code P4R)	1	---- ---	---- ---	---- ---	1748 AR7	1748 AR7
	(code P4Y)	1	---- ---	---- ---	---- ---	1748 AY3	1748 AY3
	(code P4X)	1	---- ---	---- ---	---- ---	1748 AX8	1748 AX8
	(console w/std. trans. floor shift)						
	(code P4B)	1	---- ---	---- ---	---- ---	*1749 VB8	*1749 VB8
	(code P4Q)	1	---- ---	---- ---	---- ---	*1749 VQ8	*1749 VQ8
	(code P4R)	1	---- ---	---- ---	---- ---	*1749 AR7	*1749 AR7
	(code P4X)	1	---- ---	---- ---	---- ---	*1749 AX8	*1749 AX8
	(code P4Y)	1	---- ---	---- ---	---- ---	*1749 AY3	*1749 AY3
	P1-L, P2-L						
	(codes L1B, L4B, L5B)	1	1731 AB8	---- ---	1731 AB8		
	(codes L1R, L4R, L5R)	1	1731 AR7	---- ---	1731 AR7		
	(codes L1T, L2T, L8T, L4T, L5T)	1	1731 AT8	---- ---	1731 AT8		
	P1-L, P2-L (floor mounted shift)						
	(codes L1B, L4B, L5B)	1	1732 AB8	---- ---	1732 AB8		
	(codes L1R, L4R, L5R)	1	1732 AR7	---- ---	1732 AR7		
	(codes L1T, L2T, L8T, L4T, L5T)	1	1732 AT8	---- ---	1732 AT8		
	P1-M, P2-M						
	(codes M1B, M4B, M5B)	1	1731 AB8	---- ---	1731 AB8		
	(codes M1Q, M4Q)	1	1731 AQ8	---- ---	1731 AQ8		
	(codes M1R, M4R, M5R)	1	1731 AR7	---- ---	1731 AR7		
	(codes M1T, M4T, M5T)	1	1731 AT8	---- ---	1731 AT8		
	P1-M, P2-M (floor mounted shift)						
	(codes M1B, M4B, M5B)	1	1732 AB8	---- ---	1732 AB8		
	(codes M1Q, M4Q)	1	1732 AQ8	---- ---	1732 AQ8		
	(codes M1R, M4R, M5R)	1	1732 AR7	---- ---	1732 AR7		
	(codes M1T, M4T, M5T)	1	1732 AT8	---- ---	1732 AT8		

★ Indicates use as required.
⊟ Indicates parts not listed in any previous parts book.
Right and left part numbers are on same line, first number is right, second number is left.
* Indicates change or addition.

MyMopar.com

Printed in U.S.A.
Prices and specifications subject to change without notice.
April 1966, Supersedes May 1965.

CODE	REMARKS	PER CAR	SED.	4D H.T	STA. WGN.	2D H.T	CV. CP.
23-79-3	CARPET, Front Floor - Cont'd						
	P1-H, P2-H						
	(codes H1B, H2B, H4B, H5B)	1	1731 AB8	1731 AB8	1731 AB8	1731 AB8	1731 AB8
	(codes H1Q, H2Q, H4Q, H5Q)	1	1731 AQ8	1731 AQ8	1731 AQ8	1731 AQ8	1731 AQ8
	(codes H1R, H2R, H4R, H5R)	1	1731 AR7	1731 AR7	1731 AR7	1731 AR7	1731 AR7
	(codes H1T, H2T, H4T)	1	1731 AT8	1731 AT8	1731 AT8	1731 AT8	1731 AT8
	(codes H1Y, H2Y, H4Y, H5Y)	1	1731 AY8	1731 AY8	1731 AY8	1731 AY8	1731 AY8
	(code H5X)	1	1731 AX8	1731 AX8	---- ---	1731 AX8	1731 AX8
	P1-H, P2-H (floor mounted shift)						
	(codes H1B, H2B, H4B, H5B)	1	1732 AB8	1732 AB8	1732 AB8	1732 AB8	1732 AB8
	(codes H1Q, H2Q, H4Q, H5Q)	1	1732 AQ8	1732 AQ8	1732 AQ8	1732 AQ8	1732 AQ8
	(codes H1R, H2R, H4R, H5R)	1	1732 AR7	1732 AR7	1732 AR7	1732 AR7	1732 AR7
	(codes H1T, H2T, H4T)	1	1732 AT8	1732 AT8	1732 AT8	1732 AT8	1732 AT8
	(codes H1Y, H2Y, H4Y, H5Y)	1	1732 AY8	1732 AY8	1732 AY8	1732 AY8	1732 AY8
	(code H5X)	1	1732 AX8	1732 AX8	---- ---	1732 AX8	1732 AX8
	P2-P						
	(code P4B)	1	---- ---	---- ---	---- ---	1761 AB8	1761 AB8
	(code P4Q)	1	---- ---	---- ---	---- ---	1761 AQ8	1761 AQ8
	(code P4R)	1	---- ---	---- ---	---- ---	1761 AR7	1761 AR7
	(codes P4X, P4U)	1	---- ---	---- ---	---- ---	1761 AX8	1761 AX8
	(code P4Y)	1	---- ---	---- ---	---- ---	1761 AY8	1761 AY8
	P2-P (manual 4 speed trans.) (w/floor console)						
	(code P4B)	1	---- ---	---- ---	---- ---	1737 AB8	1737 AB8
	(code P4Q)	1	---- ---	---- ---	---- ---	1737 AQ8	1737 AQ8
	(code P4R)	1	---- ---	---- ---	---- ---	1737 AR7	1737 AR7
	(codes P4X, P4U)	1	---- ---	---- ---	---- ---	1737 AX8	1737 AX8
	(code P4Y)	1	---- ---	---- ---	---- ---	1737 AY8	1737 AY8
23-79-33	CARPET, Rear Floor (floor mounted shift)						
	R1-L, R1-H, R2-L, R2-H						
	(codes L1B, L4B, L5B, H1B, H4B)	1	1703 AB8	---- ---	1703 AB8		
	(codes H1Q, H4Q)	1	1703 AQ8	---- ---	1703 AQ8		
	(codes L1R, L4R, L5R, H1R, H4R)	1	1703 AR7	---- ---	1703 AR7		
	(codes L1T, L2T, L8T, L4T, L5T, H1T, H4T)	1	1703 AT8	---- ---	1703 AT8		
	(codes H1Y, H4Y)	1	1703 AY3	---- ---	1703 AY3		
	R1, R2 (center floor pan cover panel insert)						
	(codes L4B, K4B, H4B)	1	---- ---	---- ---	1800 AB8		
	(code H4Q)	1	---- ---	---- ---	1800 AQ8		
	(codes L4R, K4R, H4R)	1	---- ---	---- ---	1800 AR7		
	(codes L4T, K4T, H4T)	1	---- ---	---- ---	1800 AT8		
	(code H4Y)	1	---- ---	---- ---	1800 AY8		
	R1, R2 (rear floor pan insert)						
	(codes L4B, K4B, H4B)	1	---- ---	---- ---	1801 AB8		
	(code H4Q)	1	---- ---	---- ---	1801 AQ8		
	(codes L4R, K4R, H4R)	1	---- ---	---- ---	1801 AR7		
	(codes L4T, K4T, H4T)	1	---- ---	---- ---	1801 AT8		
	(code H4Y)	1	---- ---	---- ---	1801 AY8		
	R1, R2 (rear floor pan cover panel insert)						
	(codes L4B, K4B, H4B)	1	---- ---	---- ---	1802 AB8		
	(code H4Q)	1	---- ---	---- ---	1802 AQ8		
	(codes L4R, K4R, H4R)	1	---- ---	---- ---	1802 AR7		
	(codes L4T, K4T, H4T)	1	---- ---	---- ---	1802 AT8		
	(code H4Y)	1	---- ---	---- ---	1802 AY8		
	Screw and Washer (attaching)	●	---- ---	---- ---	6024 678		

★ Indicates use as required.
⊟ Indicates parts not listed in any previous parts book.
April 1966, Supersedes May 1965.

Printed in U.S.A.
Prices and specifications subject to change without notice.
Right and left part numbers are on same line, first number is right, second number is left.
* Indicates change or addition.

MyMopar.com

CODE	REMARKS	PER CAR	SED.	4D H.T	STA. WGN.	2D H.T	CV. CP.
23-79-33	CARPET, Rear Floor - Cont'd						
	R1, R2 (floor pan axle kick-up front trim)						
	(paint as required)	1	---- ---	---- ---	2292 901		
	R2-P (bucket seat with console)						
	(code P4B)	1	---- ---	---- ---	---- ---	1744 AB8	1745 AB8
	(code P4Q)	1	---- ---	---- ---	---- ---	1744 AQ8	1745 AQ8
	(code P4R)	1	---- ---	---- ---	---- ---	1744 AR7	1745 AR7
	(code P4X)	1	---- ---	---- ---	---- ---	1744 AX8	1745 AX8
	(code P4Y)	1	---- ---	---- ---	---- ---	1744 AY3	1745 AY3
	(code P4T)	1	---- ---	---- ---	---- ---	---- ---	1745 AT8
	R1-H, R2-H						
	(codes H1B, H4B)	1	---- ---	---- ---	---- ---	1705 AB8	1704 AB8
	(codes H1Q, H4Q)	1	---- ---	---- ---	---- ---	1705 AQ8	1704 AQ8
	(codes H1R, H4R)	1	---- ---	---- ---	---- ---	1705 AR7	1704 AR7
	(code H1T)	1	---- ---	---- ---	---- ---	1705 AT8	
	(codes H1Y, H4Y)	1	---- ---	---- ---	---- ---	1705 AY3	1704 AY3
	(code H4X)	1	---- ---	---- ---	---- ---	1705 AX8	1704 AX8
	P1, P2 (center floor pan cover panel) (2 seater) (vinoleum)						
	(codes L4B, K4B, M4B, H4B)	1	---- ---	---- ---	1810 AB8		
	(codes M4Q, H4Q)	1	---- ---	---- ---	1810 AQ8		
	(codes L4R, K4R, M4R, H4R)	1	---- ---	---- ---	1810 AR7		
	(codes L4T, K4T, M4T, H4T)	1	---- ---	---- ---	1810 AT8		
	(code H4Y)	1	---- ---	---- ---	1810 AY8		
	Screw (attaching)	2	---- ---	---- ---	6024 678		
	P1, P2 (rear floor pan cover panel) (2 seater)						
	(codes L4B, K4B, M4B, H4B)	1	---- ---	---- ---	1819 AB8		
	(codes L4R, K4R, M4R, H4R)	1	---- ---	---- ---	1819 AR7		
	(codes L4T, H4T, M4T, K4T)	1	---- ---	---- ---	1819 AT8		
	(code H4Y)	1	---- ---	---- ---	1819 AY8		
	P1, P2 (rear floor pan cover panel) (3 seater) (vinoleum)						
	(codes M4B, H4B)	1	---- ---	---- ---	1810 AB8		
	(codes M4R, H4R)	1	---- ---	---- ---	1810 AR7		
	(codes M4T, H4T)	1	---- ---	---- ---	1810 AT8		
	(code H4Y)	1	---- ---	---- ---	1810 AY8		
	Screw and Washer	6	---- ---	---- ---	6024 678		
	P1, P2 (2 D.)						
	(codes L1B, M1B, H2B, H5B)	1	1717 AB8	---- ---	---- ---	1717 AB8	1717 AB8
	(codes M1Q, H2Q, H5Q)	1	1717 AQ8	---- ---	---- ---	1717 AQ8	1717 AQ8
	(codes M1R, H2R, H5R)	1	1717 AR7	---- ---	---- ---	1717 AR7	1717 AR7
	(codes L1T, L2T, L8T, M1T, H2T)	1	1717 AT8	---- ---	---- ---	1717 AT8	1717 AT8
	(codes H2Y, H5Y)	1	---- ---	---- ---	---- ---	1717 AY8	1717 AY8
	(code H5X)	1	---- ---	---- ---	---- ---	1717 AX8	1717 AX8
	P1, P2						
	(codes L4B, M4B, H4B)	1	---- ---	---- ---	1721 AB8		
	(codes M4Q, H4Q)	1	---- ---	---- ---	1721 AQ8		
	(codes L4R, M4R, H4R)	1	---- ---	---- ---	1721 AR7		
	(codes L4T, M4T, H4T)	1	---- ---	---- ---	1721 AT8		
	(code H4Y)	1	---- ---	---- ---	1721 AY8		
	P1, P2 (4 D.)						
	(codes L1B, L5B, M1B, M5B, H1B, H5B)	1	1718 AB8	1718 AB8			
	(codes M1Q, H1Q, H5Q)	1	1718 AQ8	1718 AQ8			

★ Indicates use as required.
∃ Indicates parts not listed in any previous parts book.
Right and left part numbers are on same line, first number is right, second number is left.
* Indicates change or addition.

MyMopar.com

CODE	REMARKS	PER CAR	SED.	4D H.T	STA. WGN.	2D H.T	CV. CP.
23-79-33	CARPET, Rear Floor - Cont'd						
	P1, P2 (4 D.)						
	(codes L1R, L5R, M1R, M5R, H1R, H5R)	1	1718 AR7	1718 AR7			
	(codes L1T, L2T, L8T, L5T, M1T, M5T, H1T)	1	1718 AT8	1718 AT8			
	(codes H1Y, H5Y)	1	1718 AY8	1718 AY8			
	(code H5X)	1	1718 AX8	1718 AX8			
	P2-M, P2-H (axle kick-up rear floor pan panel) (paint as required)	1	---- ---	---- ---	4319 AT8		
	P2 (axle kick-up center floor pan panel) (paint as required)	1	---- ---	---- ---	4320 AT8		
	P2-M, P2-H (rear floor well side cover)						
	(codes M4B, H4B)	1	---- ---	---- ---	2088-9 AB4		
	(codes M4Q, H4Q)	1	---- ---	---- ---	2086-7 AQ4		
	(codes M4R, H4R)	1	---- ---	---- ---	2088-9 AR7		
	(codes M4T, H4T)	1	---- ---	---- ---	2088-9 AT6		
	(code H4Y)	1	---- ---	---- ---	2086-7 AY3		
	P2-P						
	(code P4B)	1	---- ---	---- ---	---- ---	1701 AB8	1701 AB8
	(code P4Q)	1	---- ---	---- ---	---- ---	1701 AQ8	1701 AQ8
	(code P4R)	1	---- ---	---- ---	---- ---	1701 AR7	1701 AR7
	(codes P4X, P4U)	1	---- ---	---- ---	---- ---	1701 AX8	1701 AX8
	(code P4Y)	1	---- ---	---- ---	---- ---	1701 AY8	1701 AY8
23-79-62	INSERT, Second Seat Back Support						
	P1, P2						
	(codes L4B, K4B, M4B, H4B)	1	---- ---	---- ---	1825 AB8		
	(codes L4R, K4R, M4R, H4R)	1	---- ---	---- ---	1825 AR7		
	(codes M4T, L4T, K4T, H4T)	1	---- ---	---- ---	1825 AT8		
	(codes M4Q, H4Q)	1	---- ---	---- ---	1825 AQ8		
	(code H4Y)	1	---- ---	---- ---	1825 AY8		
	Screw (attaching)	4	---- ---	---- ---	6024 678		
23-79-64	COVER, Spare Tire						
	P1, P2						
	(codes L4B, M4B, H4B)	1	---- ---	---- ---	*3584 AB4	2581 611	2581 611
	(codes M4Q, H4Q)	1	---- ---	---- ---	*3584 AQ4		
	(codes L4R, M4R, H4R)	1	---- ---	---- ---	*3584 AR7	*3584 AR7	
	(codes L4T, M4T, H4T)	1	---- ---	---- ---	*4181 AT6		
	(code H4Y)	1	---- ---	---- ---	4498 AY3		
23-79-67	HANDLE, Spare Tire Cover						
	P1, P2	1	---- ---	---- ---	4183 AX9		
23-79-68	GROMMET, Spare Tire Cover Latching						
	P1, P2	2	---- ---	---- ---	2656 731		
23-79-79	INSERT, Tailgate Access Hole Cover						
	R1, R2						
	(codes L4B, K4B, H4B)	1	---- ---	---- ---	1803 AB8		
	(code H4Q)	1	---- ---	---- ---	1803 AQ8		
	(codes L4R, K4R, H4R)	1	---- ---	---- ---	1803 AR7		
	(codes L4T, K4T, H4T)	1	---- ---	---- ---	1803 AT8		
	(code H4Y)	1	---- ---	---- ---	1803 AY8		
	Screw and Washer (attaching)	10	---- ---	---- ---	6024 678		

★ Indicates use as required.
⊟ Indicates parts not listed in any previous parts book.

Printed in U.S.A.
Prices and specifications subject to change without notice.
Right and left part numbers are on same line, first number is right, second number is left.
* Indicates change or addition.

MyMopar.com

CODE	REMARKS	PER CAR	SED.	4D H.T	STA. WGN.	2D H.T	CV. CP.
23-79-79	INSERT, Tailgate Access Hole Cover - Cont'd						
	P1, P2						
	(codes L4B, K4B, M4B, H4B)	1	---- ---	---- ---	1823 AB8		
	(codes M4Q, H4Q)	1	---- ---	---- ---	1823 AQ8		
	(codes L4R, K4R, M4R, H4R)	1	---- ---	---- ---	1823 AR7		
	(codes L4T, K4T, M4T, H4T)	1	---- ---	---- ---	1823 AT8		
	(code H4Y)	1	---- ---	---- ---	1823 AY8		
	P1, P2 (tailgate sill to tailgate cover panel)						
	(codes L4B, K4B, M4B, H4B)	1	---- ---	---- ---	1824 AB8		
	(codes M4Q, H4Q)	1	---- ---	---- ---	1824 AQ8		
	(codes L4R, K4R, M4R, H4R)	1	---- ---	---- ---	1824 AR7		
	(codes L4T, K4T, M4T, H4T)	1	---- ---	---- ---	1824 AT8		
	(code H4Y)	1	---- ---	---- ---	1824 AY8		
	Screw (attaching)	4	---- ---	---- ---	6025 540		
	P1, P2 (tailgate inside panel insert)						
	(codes L4B, M4B, K4B, H4B)	1	---- ---	---- ---	1820 AB8		
	(codes L4R, M4R, K4R, H4R)	1	---- ---	---- ---	1820 AR7		
	(codes L4T, M4T, K4T, H4T)	1	---- ---	---- ---	1820 AT8		
	(codes M4Q, H4Q)	1	---- ---	---- ---	1820 AQ8		
	(code H4Y)	1	---- ---	---- ---	1820 AY8		
23-81-3	HANDLE, Rear Door Pull-To						
	R1, R2, P1, P2	1	*1697 413				
23-82-30	HOOK, Coat Hanger						
	R1, R2	2	2581 908	---- ---	2581 908	2581 908	
	P1, P2	2	2581 908	2581 908	2581 908	2581 908	
23-82-39	BRACKET, Coat Hook Support						
	R1, R2	2	2481 175	---- ---	2482 876	2482 876	
	P1, P2	2	---- ---	2527 098	2573 143	2527 098	
23-84-3	PAD, Instrument Panel Trim						
	R1, R2 LHD.						
	(blue)	1	4219 AB8	---- ---	4219 AB8	4219 AB8	4219 AB8
	(turquoise)	1	4219 AQ8	---- ---	4219 AQ8	4219 AQ8	4219 AQ8
	(red)	1	4219 AR7	---- ---	4219 AR7	4219 AR7	4219 AR7
	(tan)	1	4219 AT8	---- ---	4219 AT8	4219 AT8	
	(gold)	1	*4219 AY8	---- ---	*4219 AY8	4219 AY8	4219 AY8
	(black)	1	---- ---	---- ---	---- ---	4219 AX8	4219 AX8
	Retainer	★	6000 137	6000 137	6000 137	6000 137	6000 137
	Stud and Retainer (end attaching)	2	6000 700	6000 700	6000 700	6000 700	6000 700
	Clip (pad to inst. panel)	1	*6001 427	*6001 427	*6001 427	*6001 427	*6001 427
	P1, P2 LHD.						
	(blue)	1	4261 AB8	4261 AB8	4261 AB8	4261 AB8	4261 AB8
	(turquoise)	1	4261 AQ8	4261 AQ8	4261 AQ8	4261 AQ8	4261 AQ8
	(red)	1	4261 AR7	4261 AR7	4261 AR7	4261 AR7	4261 AR7
	(tan)	1	4261 AT8	4261 AT8	4261 AT8	4261 AT8	4261 AT8
	(black)	1	4261 AX8	4261 AX8	---- ---	4261 AX8	4261 AX8
	(gold)	1	4261 AY8	4261 AY8	4261 AY8	4261 AY8	4261 AY8
	P2 RHD.						
	(codes L1B, L4B, L5B, K1B, M1B, M4B, M5B, H1B, H5B)	1	4262 AB8	4262 AB8	4262 AB8	---- ---	4262 AB8
	(codes L1R, L4R, L5R, K1R, K4R, M1R, M4R, M5R, H1R, H5R)	1	4262 AR7	4262 AR7	4262 AR7	--------	4262 AR7

★ Indicates use as required.
⊟ Indicates parts not listed in any previous parts book.
Right and left part numbers are on same line, *first number is right, second number is left.*
* Indicates change or addition.

Printed in U.S.A.
Prices and specifications subject to change without notice.
April 1966, Supersedes May 1965.

MyMopar.com

CODE	REMARKS	PER CAR	SED.	4D H.T	STA. WGN.	2D H.T	CV. CP.
23-84-3	PAD, Instrument Panel Trim - Cont'd						
	P2 RHD.						
	(codes L1T, L2T, L4T, L5T, K1T, K2T, K4T, K8T, T8T, L8T, M1T, M4T, M5T, H1T)	1	4262 AT8	4262 AT8	4262 AT8	---- ---	4262 AT8
	Fasteners	6	6008 222	6008 222	6008 222	---- ---	6008 222
	Stud and Retainer (inst. panel pad end attaching)	2	6000 700	6000 700	6000 700	---- ---	6000 700
	Fastener	★	6024 274	6924 274	6024 274	6024 274	6024 274
23-84-11	RETAINER, Instrument Panel Trim Pad (clip)						
	R1, R2	8	2571 275	---- ---	2571 275	2571 275	2571 275
	P1, P2	8	2571 275	2571 275	2571 275	2571 275	2571 275
23-86-2	COVER, Roof Outside (vinyl)						
	R1, R2						
	(black)	1	---- ---	---- ---	---- ---	6109 VX8	
	(white)	1	---- ---	---- ---	---- ---	6109 VW1	
	P1, P2						
	(black)	1	---- ---	---- ---	---- ---	7199 AX8	
	(white)	1	---- ---	---- ---	---- ---	7199 AW1	
23-86-3	HEADLINING and LISTING						
	R1, R2						
	(codes L1B, K1B, L5B, H1B, H4B, P4B)	1	7130 AB3	---- ---	---- ---	7146 AB3	
	(codes H1Q, H4Q, P4Q)	1	7130 AQ3	---- ---	---- ---	7146 AQ3	
	(codes L1R, K1R, L5R, H1R, H4R, P4R)	1	7130 AW2	---- ---	---- ---	7146 AW2	
	(codes L1T, K1T, L2T, K2T, L8T, K8T, T8T, L5T, H1T, H4T)	1	7130 AT3				
	(codes H1Y, H4Y, P4Y)	1	7130 AY3	---- ---	---- ---	7146 AY3	
	(codes H4X, P4X)	1	---- ---	---- ---	---- ---	7146 AX9	
	(screen embossed hardboard) (codes L4B, L4R, L4T, K4B, K4R, K4T, H4B, H4Q, H4R, H4T, H4Y)						
	(No. 1)	1	---- ---	---- ---	1027 AW2		
	(No. 2)	1	---- ---	---- ---	1028 AW2		
	(No. 3)	1	---- ---	---- ---	1004 AW2		
	(No. 4)	1	---- ---	---- ---	1005 AW2		
	(No. 5)	1	---- ---	---- ---	1006 AW2		
	(No. 6)	1	---- ---	---- ---	1007 AW2		
	(No. 7)	1	---- ---	---- ---	1008 AW2		
	(smooth finished hardboard) (codes L4B, L4R, L4T, K4B, K4R, K4T, H4B, H4Q, H4R, H4T, H4Y)						
	(No. 1)	1	---- ---	---- ---	*1027 AWW		
	(No. 2)	1	---- ---	---- ---	*1028 AWW		
	(No. 3)	1	---- ---	---- ---	*1004 AWW		
	(No. 4)	1	---- ---	---- ---	*1005 AWW		
	(No. 5)	1	---- ---	---- ---	*1006 AWW		
	(No. 6)	1	---- ---	---- ---	*1007 AWW		
	(No. 7)	1	---- ---	---- ---	*1008 AWW		

★ Indicates use as required.
⊟ Indicates parts not listed in any previous parts book.
April 1966, Supersedes May 1965.

Printed in U.S.A.
Prices and specifications subject to change without notice.
Right and left part numbers are on same line, first number is right, second number is left.
* Indicates change or addition.

MyMopar.com

CODE	REMARKS	PER CAR	SED.	4D H.T	STA. WGN.	2D H.T	CV. CP.
23-86-3	HEADLINING and LISTING - Cont'd						
	P1, P2						
	(codes L1B, K1B, L5B, M1B, M5B, H1B, H5B)	1	7132 AB3	7132 AB3			
	(codes M1Q, H1Q, H5Q)	1	7132 AQ3	7132 AQ3			
	(codes L1R, K1R, L5R, M1R, M5R, H1R, H5R)	1	7132 AR7	7132 AR7			
	(codes L1T, L2T, L5T, M1T, M5T, K1T, K2T, K8T, T8T, H1T)	1	7132 AT3	7132 AT3			
	(codes H1Y, H5Y)	1	7132 AY3	7132 AY3			
	(code H5X)	1	7132 AX9	7132 AX9			
	(codes H2B, H5B, P4B)	1	---- ---	---- ---	---- ---	7135 AB3	
	(codes H2Q, H5Q, P4Q)	1	---- ---	---- ---	---- ---	7135 AQ3	
	(codes H2R, H5R, P4R)	1	---- ---	---- ---	---- ---	7135 AR7	
	(code H2T)	1	---- ---	---- ---	---- ---	7135 AT3	
	(codes H2Y, H5Y, P4Y)	1	---- ---	---- ---	---- ---	7135 AY3	
	(codes H5X, P4X, P4U)	1	---- ---	---- ---	---- ---	7135 AX9	
	P1, P2, (screen embossed hardboard)						
	(codes L4B, K4B, M4B, H4B)						
	(No. 1)	1	---- ---	---- ---	1051 AB3		
	(No. 2)	1	---- ---	---- ---	1052 AB3		
	(No. 3)	1	---- ---	---- ---	1054 AB3		
	(No. 4)	1	---- ---	---- ---	1054 AB3		
	(No. 5)	1	---- ---	---- ---	1055 AB3		
	(No. 6)	1	---- ---	---- ---	1056 AB3		
	(No. 7)	1	---- ---	---- ---	1057 AB3		
	(codes M4Q, H4Q)						
	(No. 1)	1	---- ---	---- ---	1051 AQ3		
	(No. 2)	1	---- ---	---- ---	1052 AQ3		
	(No. 3)	1	---- ---	---- ---	1054 AQ3		
	(No. 4)	1	---- ---	---- ---	1054 AQ3		
	(No. 5)	1	---- ---	---- ---	1055 AQ3		
	(No. 6)	1	---- ---	---- ---	1056 AQ3		
	(No. 7)	1	---- ---	---- ---	1057 AQ3		
	(codes L4R, K4R, M4R, H4R)						
	(No. 1)	1	---- ---	---- ---	1051 AR7		
	(No. 2)	1	---- ---	---- ---	1052 AR7		
	(No. 3)	1	---- ---	---- ---	1054 AR7		
	(No. 4)	1	---- ---	---- ---	1054 AR7		
	(No. 5)	1	---- ---	---- ---	1055 AR7		
	(No. 6)	1	---- ---	---- ---	1056 AR7		
	(No. 7)	1	---- ---	---- ---	1057 AR7		
	(codes L4T, K4T, M4T, H4T)						
	(No. 1)	1	---- ---	---- ---	1051 AT3		
	(No. 2)	1	---- ---	---- ---	1052 AT3		
	(No. 3)	1	---- ---	---- ---	1054 AT3		
	(No. 4)	1	---- ---	---- ---	1054 AT3		
	(No. 5)	1	---- ---	---- ---	1055 AT3		
	(No. 6)	1	---- ---	---- ---	1056 AT3		
	(No. 7)	1	---- ---	---- ---	1057 AT3		
	(code H4Y)						
	(No. 1)	1	---- ---	---- ---	1051 AY3		
	(No. 2)	1	---- ---	---- ---	1052 AY3		
	(No. 3)	1	---- ---	---- ---	1054 AY3		
	(No. 4)	1	---- ---	---- ---	1054 AY3		
	(No. 5)	1	---- ---	---- ---	1055 AY3		
	(No. 6)	1	---- ---	---- ---	1056 AY3		
	(No. 7)	1	---- ---	---- ---	1057 AY3		

★ Indicates use as required.
⊟ Indicates parts not listed in any previous parts book.
Right and left part numbers are on same line, first number is right, second number is left.
* Indicates change or addition.

MyMopar.com

Printed in U.S.A.
Prices and specifications subject to change without notice.
April 1966, Supersedes May 1965.

CODE	REMARKS	PER CAR	SED.	4D H.T	STA. WGN.	2D H.T	CV. CP.
23-86-3	HEADLINING and LISTING - Cont'd.						
	P1, P2 (w/air conditioning) (codes L4B, L4T, K4B, K4T, M4B, M4Q, M4T, H4B, H4Q, H4T, H4Y)						
	(No. 1)	1	---- ---	---- ---	1051 AW2		
	(No. 2)	1	---- ---	---- ---	1052 AW2		
	(No. 3)	1	---- ---	---- ---	1054 AW2		
	(No. 4)	1	---- ---	---- ---	1054 AW2		
	(No. 5)	1	---- ---	---- ---	1055 AW2		
	(No. 6)	1	---- ---	---- ---	1056 AW2		
	(No. 7)	1	---- ---	---- ---	1057 AW2		
	P1, P2 (smooth finish hardboard) (codes L4B, K4B, M4B, H4B)						
	(No. 1)	1	---- ---	---- ---	*1051 ABB		
	(No. 2)	1	---- ---	---- ---	*1052 ABB		
	(No. 3)	1	---- ---	---- ---	*1054 ABB		
	(No. 4)	1	---- ---	---- ---	*1054 ABB		
	(No. 5)	1	---- ---	---- ---	*1055 ABB		
	(No. 6)	1	---- ---	---- ---	*1056 ABB		
	(No. 7) (w or w/o domelight cutout)	1	---- ---	---- ---	*1057 ABB		
	(codes M4Q, H4Q)						
	(No. 1)	1	---- ---	---- ---	*1051 AQQ		
	(No. 2)	1	---- ---	---- ---	*1052 AQQ		
	(No. 3)	1	---- ---	---- ---	*1054 AQQ		
	(No. 4)	1	---- ---	---- ---	*1054 AQQ		
	(No. 5)	1	---- ---	---- ---	*1055 AQQ		
	(No. 6)	1	---- ---	---- ---	*1056 AQQ		
	(No. 7) (w or w/o domelight cutout)	1	---- ---	---- ---	*1057 AQQ		
	(codes L4R, K4R, M4R, H4R)						
	(No. 1)	1	---- ---	---- ---	*1051 ARR		
	(No. 2)	1	---- ---	---- ---	*1052 ARR		
	(No. 3)	1	---- ---	---- ---	*1054 ARR		
	(No. 4)	1	---- ---	---- ---	*1054 ARR		
	(No. 5)	1	---- ---	---- ---	*1055 ARR		
	(No. 6)	1	---- ---	---- ---	*1056 ARR		
	(No. 7) (w or w/o domelight cutout)	1	---- ---	---- ---	*1057 ARR		
	(codes L4T, K4T, M4T, H4T)						
	(No. 1)	1	---- ---	---- ---	*1051 ATT		
	(No. 2)	1	---- ---	---- ---	*1052 ATT		
	(No. 3)	1	---- ---	---- ---	*1054 ATT		
	(No. 4)	1	---- ---	---- ---	*1054 ATT		
	(No. 5)	1	---- ---	---- ---	*1055 ATT		
	(No. 6)	1	---- ---	---- ---	*1056 ATT		
	(No. 7) (w or w/o domelight cutout)	1	---- ---	---- ---	*1057 ATT		
	(code H4Y)						
	(No. 1)	1	---- ---	---- ---	*1051 AYY		
	(No. 2)	1	---- ---	---- ---	*1052 AYY		
	(No. 3)	1	---- ---	---- ---	*1054 AYY		
	(No. 4)	1	---- ---	---- ---	*1054 AYY		
	(No. 5)	1	---- ---	---- ---	*1055 AYY		
	(No. 6)	1	---- ---	---- ---	*1056 AYY		
	(No. 7) (w or w/o domelight cutout)	1	---- ---	---- ---	*1057 AYY		

★ Indicates use as required.
B Indicates parts not listed in any previous parts book.
April 1966, Supersedes May 1965.

Printed in U.S.A.
Prices and specifications subject to change without notice.
Right and left part numbers are on same line, first number is right, second number is left.
* Indicates change or addition.

MyMopar.com

CODE	REMARKS	PER CAR	SED.	4D H.T	STA. WGN.	2D H.T	CV. CP.
23-86-3	HEADLINING and LISTING - Cont'd						
	P1, P2 (smooth finish hardboard) (w/air cond.) (codes L4B, K4B, L4T, K4T, M4B, M4Q, M4T, H4B, H4Q, H4T, H4Y)						
	(No. 1)	1	---- ---	---- ---	*1051 AWW		
	(No. 2)	1	---- ---	---- ---	*1052 AWW		
	(No. 3)	1	---- ---	---- ---	*1054 AWW		
	(No. 4)	1	---- ---	---- ---	*1054 AWW		
	(No. 5)	1	---- ---	---- ---	*1055 AWW		
	(No. 6)	1	---- ---	---- ---	*1056 AWW		
	(No. 7) (w or w/o dome light cutout)	1	---- ---	---- ---	*1057 AWW		
	PANEL, Rear Quarter Upper Headlining Trim						
	P1-H, P2-H, P1-P, P2-P						
	(codes H2B, H5B, P4B)	1	---- ---	---- ---	---- ---	2090-1 AB3	
	(codes H2Q, H5Q, P4Q)	1	---- ---	---- ---	---- ---	2090-1 AQ3	
	(codes H2R, H5R, P4R)	1	---- ---	---- ---	---- ---	2090-1 AR7	
	(code H2T)	1	---- ---	---- ---	---- ---	2090-1 AT3	
	(codes H2Y, H5Y, P4Y)	1	---- ---	---- ---	---- ---	2090-1 AY3	
	(code H5X, P4X, P4U)	1	---- ---	---- ---	---- ---	2090-1 AX9	
23-86-8	RETAINER, Roof Panel Cover						
	R1, R2						
	Side Front	1	---- ---	---- ---	---- ---	2573 042-3	
	Rear	1	---- ---	---- ---	---- ---	2573 040-1	
	P2-P						
	Side Front	1	---- ---	---- ---	---- ---	2603 276-7	
	Screw	★	---- ---	---- ---	---- ---	*6024 271	
23-86-10	BOW, Roof Support						
	R1, R2						
	(No. 1)	1	2424 804	---- ---	2424 804	2424 500	
	(Nos. 2 and 3) (2 D.)	2	2528 882				
	(Nos. 2 and 3) (4 D.)	2	2424 805				
	(No. 2)	1	---- ---	---- ---	2480 973		
	(Nos. 3 and 4)	2	---- ---	---- ---	2480 974		
	P1, P2						
		1	2482 270	2482 270	---- ---	2482 273	
	(Nos. 1 and 2)	2	---- ---	---- ---	2483 992		
	(No. 3)	1	---- ---	---- ---	2482 279		
	(No. 4)	1	---- ---	---- ---	2483 862		
23-86-11	RETAINER, Roof Side Rail Roof Bow						
	P1, P2						
		4	2482 581				
		2	---- ---	---- ---	---- ---	2482 581	
		8	---- ---	---- ---	2482 581		
	(folding top rear bow moulding)	1	---- ---	---- ---	---- ---	---- ---	2581 893
23-86-14	PAD, Air Conditioning Evap. Unit Trim						
	P1, P2						
		1	---- ---	---- ---	*2485 395		
23-86-19	STRIP, Roof Headlining Retaining						
	R1, R2	1	---- ---	---- ---	---- ---	2483 408-9	
	Front	1	2483 406-7				
	Rear	1	2255 430-1				
	Side	1	2481 750-1				
	Upper	1	2481 752				

★ Indicates use as required.
⊟ Indicates parts not listed in any previous parts book.
Right and left part numbers are on same line, first number is right, second number is left.
* Indicates change or addition.

MyMopar.com

Printed in U.S.A.
Prices and specifications subject to change without notice.
April 1966, Supersedes May 1965.

CODE	REMARKS	PER CAR	SED.	4D H.T	STA. WGN.	2D H.T	CV. CP.
23-86-19	STRIP, Roof Headlining Retaining - Cont'd						
	R1, R2						
	Front Side	1	---- ---	---- ---	2483 632-3		
	Rear	1	---- ---	---- ---	2251 448		
	Side Rear	1	---- ---	---- ---	2251 446-7		
	Rear Corner	1	---- ---	---- ---	2251 444-5		
	Screw (retaining) (front strip)	2	125 978				
	P1, P2						
	Front	1	2482 370-1				
	Rear	1	2482 376-7				
	Side Front	1	---- ---	---- ---	2482 374-5		
	Rear	1	---- ---	---- ---	2482 309		
	Rear Side	1	---- ---	---- ---	*2602 136-7		
	Rear Corner	1	---- ---	---- ---	2482 382-3		
	RETAINER, Rear Window Headlining						
	P1, P2						
	Upper	1	2483 204-5	---- ---	---- ---	2527 803	
	Side	1	2483 204-5	---- ---	---- ---	2527 822-3	
	Fastener	9	6000 922	---- ---	6000 922	6000 922	
	RETAINER, Headlining Listing						
	(short) (red)	★	2581 273	2581 273	---- ---	2581 273	
	(medium) (aluminum)	★	2581 274	2581 274	---- ---	2581 274	
	(long) (yellow)	★	2581 275	2581 275	---- ---	2581 275	
	RETAINER, Roof Headlining and Garnish Moulding						
	P1, P2						
	Front	1	---- ---	2483 224-5	---- ---	2527 804-5	
	Rear	1	---- ---	2483 226-7	---- ---	2527 806-7	
23-86-24	RETAINER, Roof Inside Finish Moulding						
	R1, R2						
	(Nos. 1, 4 and 5)	3	---- ---	---- ---	2499 084		
	(Nos. 2 and 3)	2	---- ---	---- ---	2499 083		
	(No. 6)	1	---- ---	---- ---	2499 086		
	P1, P2						
	(Nos. 1 thru 6)	6	---- ---	---- ---	2581 461		
23-86-35	MOULDING, Roof Inside Finish						
	R1, R2 (rear window)						
	(codes L1B, K1B, L5B, H1B, H4B)	2	3700 AB3				
	(codes H1Q, H4Q)	2	3700 AQ3				
	(codes L1T, K1T, L2T, K2T, L8T, K8T, T8T, L5T, H1T, H4T)	2	3700 AT3				
	(codes L1R, K1R, L5R, H1R, H4R)	2	3700 AW2				
	(codes H1Y, H4Y)	2	3700 AY3				
	P1, P2						
	(codes L1B, K1B, L5B, M1B, M5B, H1B, H5B)	2	3713 AB3	3713 AB3			
	(codes M1Q, H1Q, H4Q)	2	3713 AQ3	3713 AQ3			
	(codes L1T, K1T, L2T, K2T, L5T, L8T, T8T, M1T, M5T, H1T)	2	3713 AT3	3713 AT3			
	(codes H1Y, H5Y)	2	3713 AY3	3713 AY3			

★ Indicates use as required.
⊟ Indicates parts not listed in any previous parts book.

MyMopar.com

Printed in U.S.A.
Prices and specifications subject to change without notice.
Right and left part numbers are on same line, first number is right, second number is left.
● Indicates change on addition

CODE	REMARKS	PER CAR	SED.	4D H.T	STA. WGN.	2D H.T	CV. CP.
23-86-35	MOULDING, Roof Inside Finish - Cont'd						
	P1, P2						
	(codes H1R, H5R)	2	3713 AR7	3713 AR7			
	(code H5X)	2	3713 AX9	3713 AX9			
	(folding top rear bow)	1	---- ---	---- ---	---- ---	---- ---	2581 892
	Screw (attaching)	2	---- ---	---- ---	---- ---	---- ---	6025 692
	(white)	6	---- ---	---- ---	*1047 VW2		
	P1, P2	6	---- ---	---- ---	2440 144		
23-86-36	CAP, Rear Window Headlining Trim Moulding Center						
	R1, R2						
	(codes L1B, K1B, L5B, H1B, H4B)	1	3711 AB3				
	(codes H1Q, H4Q)	1	3711 AQ3				
	(codes L1R, K1R, L5R, H1R, H4R)	1	3711 AW2				
	(codes L1T, K1T, L2T, K2T, L8T, K8T, T8T, L5T, H1T, H4T)	1	3711 AT3				
	(codes H1Y, H4Y)	1	3711 AY3				
	R1, R2						
	(roof side retaining strip)	1	---- ---	---- ---	2251 808-9		
	P1, P2						
	(codes L1B, K1B, L5B, M1B, M5B, H1B, H5B)	1	3711 AB3	3711 AB3			
	(codes M1Q, H1Q, H5Q)	1	3711 AQ3	3711 AQ3			
	(codes L1R, K1R, M1R, M5R, L5R)	1	3711 AW2	3711 AW2			
	(codes H1R, H5R)	1	3711 AR7	3711 AR7			
	(codes L1T, K1T, L2T, K2T, L5T, L8T, K8T, T8T, M1T, M5T, H1T)	1	3711 AT3	3711 AT3			
	(codes H1Y, H5Y)	1	3711 AY3	3711 AY3			
	(code H5X)	1	3711 AX9	3711 AX9			
	(code X1P) RHD.	1	3711 AX9				
	(finish moulding)	12	---- ---	---- ---	1759 636		
23-91-6	PANEL, Cowl Trim						
	R1, R2						
	(codes L1B, K1B, L5B, L4B, K4B, H1B, P4B)	1	1410-1 AB8	---- ---	1410-1 AB8	1410-1 AB8	1410-1 AB8
	(codes H1Q, H4Q, P4Q)	1	1410-1 AQ8	---- ---	1410-1 AQ8	1410-1 AQ8	1410-1 AQ8
	(codes L1R, K1R, L5R, L4R, K4R, H1R, H4R, P4R)	1	1410-1 VR6	---- ---	1410-1 VR6	1410-1 VR6	1410-1 VR6
	(codes L1T, K1T, L2T, K2T, L8T, K8T, L5T, T8T, L4T, K4T, H1T, H4T)	1	1410-1 VT6	---- ---	1410-1 VT6	1410-1 VT6	1410-1 VT6
	(codes H4X, P4X)	1	---- ---	---- ---	---- ---	1410-1 VX9	1410-1 VX9
	(code P4Y)	1	---- ---	---- ---	---- ---	1410-1 AY3	1410-1 AY3
	Screw and Seal (attaching)	1	*6023 388	---- ---	*6023 388	*6023 388	*6023 388
	P1-L, P2-L						
	(codes L1B, K1B, L3B, L4B, K4B, L5B)	1	1422-3 AB8	1422-3 AB8	1422-3 AB8	1422-3 AB8	
	(codes L1R, K1R, L3R, L4R, K4R, L5R)	1	1422-3 AR8	1422-3 AR8	1422-3 AR8	1422-3 AR8	
	(codes L1T, K1T, L2T, K2T, L8T, K8T, T8T, L3T, L4T, K4T, L5T)	1	1422-3 AT8	1422-3 AT8	1422-3 AT8	1422-3 AT8	
	(codes L3X, L4X)	1	1422-3 AX9	1422-3 AX9	1422-3 AX9	1422-3 AX9	

★ Indicates use as required.
Indicates parts not listed in any previous parts book.
Right and left part numbers are on same line, first number is right, second number is left.
* Indicates change or addition.

MyMopar.com

Printed in U.S.A.
Prices and specifications subject to change without notice.
April 1966, Supersedes May 1965.

CODE	REMARKS	PER CAR	SED.	4D H.T	STA. WGN.	2D H.T	CV. CP.
23-91-6	PANEL, Cowl Trim - Cont'd						
	P1-M, P2-M, P1-H, P2-H						
	(codes M1B, M4B, M5B, H1B)	1	1422-3 AB8	1422-3 AB8	1422-3 AB8	1422-3 AB8	1422-3 AB8
	(codes M1Q, M4Q, H1Q, H2Q, H4Q, H5Q)	1	1422-3 AQ8	1422-3 AQ8	1422-3 AQ8	1422-3 AQ8	1422-3 AQ8
	(codes M1R, M4R, M5R, H1R, H2R, H4R, H5R)	1	1420-1 AR7	1420-1 AR7	1420-1 AR7	1420-1 AR7	1420-1 AR7
	(codes M1T, M4T, M5T, H1T, H2T, H4T)	1	1422-3 AT8	1422-3 AT8	1422-3 AT8	1422-3 AT8	1422-3 AT8
	(codes H1Y, H2Y, H4Y, H5Y)	1	1422-3 AY8	1422-3 AY8	1422-3 AY8	1422-3 AY8	1422-3 AY8
	(code H5X)	1	1422-3 AX9	1422-3 AX9	1422-3 AX9	1422-3 AX9	1422-3 AX9
	P2-P						
	(code P4B)	1	---- ---	---- ---	---- ---	1422-3 AB8	1422-3 AB8
	(code P4Q)	1	---- ---	---- ---	---- ---	1422-3 AQ8	1422-3 AQ8
	(code P4R)	1	---- ---	---- ---	---- ---	1420-1 AR7	1420-1 AR7
	(codes P4X, P4U)	1	---- ---	---- ---	---- ---	1422-3 AX9	1422-3 AX9
	(code P4Y)	1	---- ---	---- ---	---- ---	1422-3 AY8	1422-3 AY8
	P2-P (carpet)						
	(code P4B)	1	---- ---	---- ---	---- ---	1432-3 AB8	1432-2 AB8
	(code P4Q)	1	---- ---	---- ---	---- ---	1432-3 AQ8	1432-3 AQ8
	(code P4R)	1	---- ---	---- ---	---- ---	1432-3 AR7	1432-3 AR7
	(codes P4X, P4U)	1	---- ---	---- ---	---- ---	1432-3 AX8	1432-3 AX8
	(code P4Y)	1	---- ---	---- ---	---- ---	1432-3 AY8	1432-3 AY8
	Screw and Washer (attaching)	1	6023 388	6023 388	6023 388	6023 388	6023 388
	Screw	4	*9415 214	*9415 214	*9415 214	*9415 214	*9415 214
	P1, P2 (paint as required) (extension)	1	---- ---	1428-9 AX9	---- ---	1428-9 AX9	1428-9 AX9
	EXTENSION, Cowl Side Trim Panel (paint as required)						
	P1, P2	1	---- ---	1428-9 AX9	---- ---	1428-9 AX9	1428-9 AX9
23-91-20	RETAINER, Cowl Side Trim						
	P1, P2 (upper)	2	*2664 466	*2664 466	*2664 466	*2664 466	*2664 466
	P2-P	1	---- ---	---- ---	---- ---	2588 124-5	2588 124-5
23-92-5	PANEL, Door Trim						
	R1-L, R2-L (2 D.)						
	(codes L1B, K1B)	1	3182-3 ABB				
	(codes L1R, K1R)	1	3182-3 ARR				
	(codes L1T, K1T, L2T, K2T, L8T, K8T)	1	3182-3 ATT				
	R1-L, R2-L (4 D.)						
	(codes L1B, K1B, L4B, K4B, L5B) Front	1	3180-1 ABB	---- ---	3180-1 ABB		
	Rear	1	3252-3 ABB	---- ---	3252-3 ABB		
	(codes L1R, K1R, L4R, K4R, L5R) Front	1	3180-1 ARR	---- ---	3180-1 ARR		
	Rear	1	3252-3 ARR	---- ---	3252-3 ARR		
	(codes L1T, K1T, L4T, K4T, L2T, K2T, L5T, L8T, K8T, T8T) Front	1	3180-1 ATT	---- ---	3180-1 ATT		
	Rear	1	3252-3 ATT	---- ---	3252-3 ATT		
	Screw and Washer (attaching)	4	6023 381	---- ---	6023 381		
	R1-H, R2-H						
	(codes H1B, H4B) Front	1	3176-7 ABB	---- ---	3176-7 ABB		
	Rear	1	3248-9 ABB	---- ---	3248-9 ABB		
	(codes H1Q, H4Q) Front	1	3176-7 AQQ	---- ---	3176-7 AQQ		
	Rear	1	3248-9 AQQ	---- ---	3248-9 AQQ		
	(codes H1R, H4R) Front	1	3176-7 ARR	---- ---	3176-7 ARR		
	Rear	1	3248-9 ARR	---- ---	3248-9 ARR		

★ Indicates use as required.
⊟ Indicates parts not listed in any previous parts book.
April 1966, Supersedes May 1965.

Printed in U.S.A.
Prices and specifications subject to change without notice.
Right and left part numbers are on same line, first number is right, second number is left.
* Indicates change or addition.

MyMopar.com

CODE	REMARKS		PER CAR	SED.	4D H.T	STA. WGN.	2D H.T	CV. CP.
23-92-5	PANEL, Door Trim - Cont'd							
	R1-H, R2-H							
	(codes H1T, H4T)	Front	1	3176-7 ATT	---- ---	3176-7 ATT		
		Rear	1	3248-9 ATT	---- ---	3248-9 ATT		
	(codes H1Y, H4Y)	Front	1	3176-7 AYY	---- ---	3176-7 AYY		
		Rear	1	3248-9 AYY	---- ---	3248-9 AYY		
	R1-H, R2-H							
	(codes H1B, H4B)		1	---- ---	---- ---	---- ---	3190-1 ABB	3190-1 ABB
	(codes H1Q, H4Q)		1	---- ---	---- ---	---- ---	3190-1 AQQ	3190-1 AQQ
	(codes H1R, H4R)		1	---- ---	---- ---	---- ---	3190-1 ARR	3190-1 ARR
	(code H1T)		1	---- ---	---- ---	---- ---	3190-1 ATT	
	(codes H1Y, H4Y)		1	---- ---	---- ---	---- ---	3190-1 AYY	3190-1 AYY
	(code H4X)		1	---- ---	---- ---	---- ---	3190-1 AOX	3190-1 AOX
	R2-P (w/concave moulding)							
	(code P4B)		1	---- ---	---- ---	---- ---	3188-9 ABB	3188-9 ABB
	(code P4Q)		1	---- ---	---- ---	---- ---	3188-9 AQQ	3188-9 AQQ
	(code P4R)		1	---- ---	---- ---	---- ---	3188-9 ARR	3188-9 ARR
	(code P4X)		1	---- ---	---- ---	---- ---	3188-9 AOX	3188-9 AOX
	(code P4Y)		1	---- ---	---- ---	---- ---	3188-9 AYY	3188-9 AYY
	(w/oval moulding)							
	(code P4B)		1	---- ---	---- ---	---- ---	3138-9 ABB	3138-9 ABB
	(code P4Q)		1	---- ---	---- ---	---- ---	3138-9 AQQ	3138-9 AQQ
	(code P4R)		1	---- ---	---- ---	---- ---	3138-9 ARR	3138-9 ARR
	(code P4X)		1	---- ---	---- ---	---- ---	3138-9 AOX	3138-9 AOX
	(code P4Y)		1	---- ---	---- ---	---- ---	3138-9 AYY	3138-9 AYY
	Screw and Washer (attaching)		4	6023 381	---- ---	6023 381	6023 381	6023 381
	P1-L, P2-L (2 D.)							
	(codes L1B, K1B)		1	3418-9 ABB				
	(codes L1R, K1R)		1	3418-9 AOR				
	(codes L1T, K1T, L2T, K2T, L8T, K8T)		1	3418-9 ATT				
	P1-L, P2-L (4 D.)							
	(codes L1B, L4B, K4B, K1B, L5B)	Front	1	3414-5 ABB	---- ---	3414-5 ABB		
	(codes L1B, K1B, L5B)	Rear	1	3270-1 ABB				
	(codes L4B, K4B)	Rear	1	---- ---	---- ---	3290-1 ABB		
	(codes L1R, L4R, K4R, K1R, L5R)	Front	1	3414-5 AOR	---- ---	3414-5 AOR		
	(codes L1R, K1R, L5R)	Rear	1	3270-1 AOR				
	(codes L4B, K4B)	Rear	1	---- ---	---- ---	3290-1 AOR		
	(codes L1T, L4T, K4T, K1T, L2T, K2T, L8T, T8T, L5T)	Front	1	3414-5 ATT	---- ---	3414-5 ATT		
	(codes L1T, K1T, L2T, K2T, L8T, K8T, T8T, L5T)	Rear	1	3270-1 ATT				
	(codes L4T, K4T)	Rear	1	---- ---	---- ---	3290-1 ATT		
	P1-M, P2-M							
	(codes M1B, M4B, M5B)	Front	1	3422-3 ABB	---- ---	3422-3 ABB		
	(codes M1B, M5B)	Rear	1	3274-5 ABB				
	(code M4B)	Rear	1	---- ---	---- ---	3292-3 ABB		
	(codes M1Q, M4Q)	Front	1	3422-3 AQQ	---- ---	3422-3 AQQ		
	(code M1Q)	Rear	1	3274-5 AQQ				
	(code M4Q)	Rear	1	---- ---	---- ---	3292-3 AQQ		

★ Indicates use as required.
⊟ Indicates parts not listed in any previous parts book.
Right and left part numbers are on same line, first number is right, second number is left.
* Indicates change or addition.

MyMopar.com

Printed in U.S.A.
Prices and specifications subject to change without notice.
April 1966, Supersedes May 1965.

CODE	REMARKS	PER CAR	SED.	4D H.T	STA. WGN.	2D H.T	CV. CP.
23-92-5	PANEL, Door Trim - Cont'd						
	P1-M, P2-M						
	(codes M1R, M4R, M5R)						
	Front	1	3422-3 ARR	---- ---	3422-3 ARR		
	(codes M1R, M5R) Rear	1	3274-5 ARR				
	(code M4R) Rear	1	---- ---	---- ---	3292-3 ARR		
	(codes M1T, M4T, M5T)						
	Front	1	3422-3 ATT	---- ---	3422-3 ATT		
	(codes M1T, M5T) Rear	1	3274-5 ATT				
	(code M4T) Rear	1	---- ---	---- ---	3292-3 ATT		
	P1-M, P2-M (2 D.)						
	(code M1B)	1	3424-5 ABB				
	(code M1Q)	1	3424-5 AQQ				
	(code M1R)	1	3424-5 ARR				
	(code M1T)	1	3424-5 ATT				
	P1-H, P2-H						
	(codes H1B, H5B, H4B)						
	Front	1	3428-9 ABB	3430-1 ABB	3428-9 ABB		
	(codes H1B, H5B) Rear	1	3276-7 ABB	3278-9 ABB			
	(code H4B) Rear	1	---- ---	---- ---	3272-3 ABB		
	(codes H1Q, H5Q, H4Q)						
	Front	1	3428-9 AQQ	3430-1 AQQ	3428-9 AQQ		
	(codes H1Q, H5Q) Rear	1	3276-7 AQQ	3278-9 AQQ			
	(code H4Q) Rear	1	---- ---	---- ---	3272-3 AQQ		
	(codes H1R, H5R, H4R)						
	Front	1	3428-9 ARR	3430-1 ARR	3428-9 ARR		
	(codes H1R, H5R) Rear	1	3276-7 ARR	3278-9 ARR			
	(code H4R) Rear	1	---- ---	---- ---	3272-3 ARR		
	(codes H1T, H4T) Front	1	3428-9 ATT	3430-1 ATT	3428-9 ATT		
	(code H1T) Rear	1	3276-7 ATT	3278-9 ATT			
	(code H4T) Rear	1	---- ---	---- ---	3272-3 ATT		
	(codes H1Y, H5Y, H4Y)						
	Front	1	3428-9 AYY	3430-1 AYY	3428-9 AYY		
	(codes H1Y, H5Y) Rear	1	3276-7 AYY	3278-9 AYY			
	(code H4Y) Rear	1	---- ---	---- ---	3272-3 AYY		
	(code H5X) Front	1	3428-9 AOX	3430-1 AOX			
	(code H5X) Rear	1	3276-7 AOX	3278-9 AOX			
	(codes H2B, H5B)	1	---- ---	---- ---	---- ---	3432-3 ABB	3432-3 ABB
	(codes H2Q, H5Q)	1	---- ---	---- ---	---- ---	3432-3 AQQ	3432-3 AQQ
	(codes H2R, H5R)	1	---- ---	---- ---	---- ---	3432-3 ARR	3432-3 ARR
	(code H2T)	1	---- ---	---- ---	---- ---	3432-3 ATT	
	(code H5X)	1	---- ---	---- ---	---- ---	3432-3 AOX	3432-3 AOX
	(codes H2Y, H5Y)	1	---- ---	---- ---	---- ---	3432-3 AYY	3432-3 AYY
	P2-P						
	(code P4B)	1	---- ---	---- ---	---- ---	3434-5 AOB	3434-5 AOB
	(code P4Q)	1	---- ---	---- ---	---- ---	3434-5 AOQ	3434-5 AOQ
	(code P4R)	1	---- ---	---- ---	---- ---	3434-5 AOR	3434-5 AOR
	(code P4X)	1	---- ---	---- ---	---- ---	3434-5 AOX	3434-5 AOX
	(code P4Y)	1	---- ---	---- ---	---- ---	3434-5 AYY	3434-5 AYY
	(code P4U)	1	---- ---	---- ---	---- ---	3434-5 AXU	3434-5 AXU
	Fastener	★	6000 365	6000 365	6000 365	6000 365	6000 365
23-96-3	PANEL, Luggage Compartment						
	Front Lining						
	R1, R2	1	*2499 117	---- ---	---- ---	*2499 117	2440 963
	Fastener (to seat back support)	3	---- ---	---- ---	---- ---	---- ---	*6000 903
	P1, P2	1	*2657 868	*2657 868	---- ---	2581 731	2581 895
	Fastener (attaching)	2	---- ---	---- ---	---- ---	6001 425	
	FILLER, Luggage Compartment						
	Floor to Quarter						
	R1, R2	1	2490 574-5	---- ---	---- ---	2490 574-5	2490 574-5

● Indicates use as required.
B Indicates parts not listed in any previous parts book.
April 1966, Supersedes May 1965.

Printed in U.S.A.
Prices and specifications subject to change without notice.
Right and left part numbers are on same line, first number is right, second number is left.
* Indicates change or addition.

MyMopar.com

CODE	REMARKS	PER CAR	SED.	4D H.T	STA. WGN.	2D H.T	CV. CP.
23-96-8	COVER, Wheelhouse and Lower Quarter Trim Panel						
	R1, R2 (paint as required)						
	(2 seater)	1	---- ---	---- ---	2056-7 VT6		
	(3 seater)	1	---- ---	---- ---	2058-9 VT6		
	P1, P2						
	(codes L4B, K4B, M4B, H4B)	1	---- ---	---- ---	2026-7 AB4		
	(codes M4Q, H4Q)	1	---- ---	---- ---	2026-7 AQ4		
	(codes L4R, K4R, M4R, H4R)	1	---- ---	---- ---	2026-7 AR7		
	(codes L4T, K4T, M4T, H4T)	1	---- ---	---- ---	2026-7 AT6		
	(code H4Y)	1	---- ---	---- ---	2026-7 AY3		
	(w/air conditioning)						
	(codes L4B, K4B, M4B, H4B)	1	---- ---	---- ---	3531 AB4		
	(codes M4Q, H4Q)	1	---- ---	---- ---	3531 AQ4		
	(codes L4R, K4R, M4R, H4R)	1	---- ---	---- ---	3531 AR7		
	(codes L4T, K4T, M4T, H4T)	1	---- ---	---- ---	3531 AT6		
	(code H4Y)	1	---- ---	---- ---	3531 AY3		
	Screw	14	---- ---	---- ---	*6026 221		
	EXTENSION, Wheelhouse and Quarter Trim Cover						
	R1, R2						
	(code H4B)	1	---- ---	---- ---	2042-3 AB4		
	(code H4Q)	1	---- ---	---- ---	2042-3 AQ4		
	(code H4R)	1	---- ---	---- ---	2042-3 AR5		
	(code H4Y)	1	---- ---	---- ---	2042-3 AY3		
23-99-9	RETAINER, Body Rear Lock Pillar Quarter						
	R1, R2	1	---- ---	---- ---	2162 508-9		
23-99-17	RETAINER, Tailgate Opening Pillar Cover Upper						
	P1, P2	2	---- ---	---- ---	2656 924		
23-99-41	COVER, Tailgate Opening Pillar (paint as required)						
	P1, P2						
	Upper	1	---- ---	---- ---	2810-1 AT6		
	Lower Right	1	---- ---	---- ---	2812 AT6		
23-101-3	PANEL, Rear Quarter Trim						
	R1-L (2 D.)						
	(codes L1B, K1B)	1	3352-3 ABB				
	(codes L1R, K1R)	1	3352-3 ARR				
	(codes L1T, K1T, L2T, K2T, L8T, K3T)	1	3352-3 ATT				
	R1, R2 (4 D.)						
	Lower						
	(codes L1B, K1B, L5B, H1B, H4B)	1	7588-9 AB4				
	(codes H1Q, H4Q)	1	7588-9 AQ4				
	(codes H1Y, H4Y)	1	7588-9 AY3				
	(code L1R)	1	7588-9 VR6				
	Upper						
	(codes L1B, K1B, L5B, H1B, H4B)	1	7584-5 AB4				
	(codes H1Q, H4Q)	1	7584-5 AQ4				
	(codes H1Y, H4Y)	1	7584-5 AY3				
	(code L1R)	1	7584-5 VR6				
	(code L1T)	1	*7584-5 VT6				

★ Indicates use as required.
⊟ Indicates parts not listed in any previous parts book. Right and left part numbers are on same line, first number is right, second number is left.
* Indicates change or addition.

MyMopar.com

CODE	REMARKS	PER CAR	SED.	4D H.T	STA. WGN.	2D H.T	CV. CP.
23-101-3	PANEL, Rear Quarter Trim - Cont'd						
	R1-H, R2-H						
	(codes H1B, H4B)	1	---- ---	---- ---	---- ---	3362-3 ABB	3364-5 ABB
	(codes H1Q, H4Q)	1	---- ---	---- ---	---- ---	3362-3 AQQ	3364-5 AQQ
	(codes H1R, H4R)	1	---- ---	---- ---	---- ---	3362-3 ARR	3364-5 ARR
	(code H1T)	1	---- ---	---- ---	---- ---	3362-3 ATT	
	(codes H1Y, H4Y)	1	---- ---	---- ---	---- ---	3362-3 AYY	3364-5 AYY
	(code H4X)	1	---- ---	---- ---	---- ---	3362-3 AOX	3364-5 AOX
	R2-P (w/concave moulding)						
	(code P4B)	1	---- ---	---- ---	---- ---	3358-9 ABB	3360-1 ABB
	(code P4Q)	1	---- ---	---- ---	---- ---	3358-9 AQQ	3360-1 AQQ
	(code P4R)	1	---- ---	---- ---	---- ---	3358-9 ARR	3360-1 ARR
	(code P4X)	1	---- ---	---- ---	---- ---	3358-9 AOX	3360-1 AOX
	(code P4Y)	1	---- ---	---- ---	---- ---	3358-9 AYY	3360-1 AYY
	(w/oval moulding)						
	(code P4B)	1	---- ---	---- ---	---- ---	3392-3 ABB	3394-5 ABB
	(code P4Q)	1	---- ---	---- ---	---- ---	3392-3 AQQ	3394-5 AQQ
	(code P4R)	1	---- ---	---- ---	---- ---	3392-3 ARR	3394-5 ARR
	(code P4X)	1	---- ---	---- ---	---- ---	3392-3 AOX	3394-5 AOX
	(code P4Y)	1	---- ---	---- ---	---- ---	3392-3 AYY	3394-5 AYY
	Screw and Washer (attaching)	★	---- ---	---- ---	---- ---	6023 476	6023 476
	Screw and Washer (attaching) (2 D.)	4	6023 381	---- ---	---- ---	6023 381	
	P1-L, P2-L (2 D.)						
	(codes L1B, K1B)	1	3376-7 ABB				
	(codes L1R, K1R)	1	3376-7 AOR				
	(codes L1T, K1T, L2T, K2T, L8T, K8T)	1	3376-7 ATT				
	(code M1B)	1	3380-1 ABB				
	(code M1Q)	1	3380-1 AQQ				
	(code M1R)	1	3380-1 ARR				
	(code M1T)	1	3380-1 ATT				
	Screw and Washer (attaching)	2	6023 476				
	P1, P2 (4 D.)						
	(codes L1B, K1B, L5B, M1B, M5B, H1B, H5B)	1	2060-1 AB4	2060-1 AB4			
	(codes M1Q, H1Q, H5Q)	1	2060-1 AQ4	2060-1 AQ4			
	(codes L1R, K1R, L5R, M1R, M5R, H1R, H5R)	1	2060-1 AR7	2060-1 AR7			
	(codes L1T, K1T, L2T, K2T, L8T, K8T, T8T, L5T, M1T, M5T, H1T)	1	2060-1 AT6	2060-1 AT6			
	(code H5X)	1	2060-1 AX9	2060-1 AX9			
	(codes H1Y, H5Y)	1	2060-1 AY3	2060-1 AY3			
	P1-H, P2-H						
	(codes H2B, H5B)	1	---- ---	---- ---	---- ---	3384-5 ABB	3386-7 ABB
	(codes H2Q, H5Q)	1	---- ---	---- ---	---- ---	3384-5 AQQ	3386-7 AQQ
	(codes H2R, H5R)	1	---- ---	---- ---	---- ---	3384-5 ARR	3386-7 ARR
	(code H2T)	1	---- ---	---- ---	---- ---	3384-5 ATT	
	(code H5X)	1	---- ---	---- ---	---- ---	3384-5 AOX	3386-7 AOX
	(codes H2Y, H5Y)	1	---- ---	---- ---	---- ---	3384-5 AYY	3386-7 AYY
	P2-P						
	(code P4B)	1	---- ---	---- ---	---- ---	3388-9 AOB	3390-1 AOB
	(code P4Q)	1	---- ---	---- ---	---- ---	3388-9 AOQ	3390-1 AOQ
	(code P4R)	1	---- ---	---- ---	---- ---	3388-9 AOR	3390-1 AOR
	(code P4X)	1	---- ---	---- ---	---- ---	3388-9 AOX	3390-1 AOX
	(code P4Y)	1	---- ---	---- ---	---- ---	3388-9 AYY	3390-1 AYY
	(code P4U)	1	---- ---	---- ---	---- ---	3388-9 AXU	3390-1 AXU
	Fastener	★	6000 365	6000 365	---- ---	6000 365	6000 365

★ Indicates use as required.
⊟ Indicates parts not listed in any previous parts book.
April 1966, Supersedes May 1965.

Printed in U.S.A.
Prices and specifications subject to change without notice.
Right and left part numbers are on same line, first number is right, second number is left.
* Indicates change or addition.

MyMopar.com

CODE	REMARKS	PER CAR	SED.	4D H.T	STA. WGN.	2D H.T	CV. CP.
23-101-14	COVER, Upper Quarter Front Trim (paint as required) R1, R2	1	---- ---	---- ---	2044-5VT6		
23-101-33	BRACKET, Quarter Trim Panel Support R1, R2	2	---- ---	---- ---	---- ---	---- ---	2490 484
23-102-3	PANEL, Shelf Trim R1, R2 (paint as required)	1	1319 AT6	---- ---	---- ---	1318 AT6	
	Fastener	2	6000 903	---- ---	---- ---	6000 903	
	P1, P2 (paint as required)	1	---- ---	---- ---	---- ---	*1314 AT6	
	(w/o speaker)	1	1315 AT6	1315 AT6	---- ---	1314 AT6	
	(w/speaker)	1	1311 AT6	1311 AT6			
	Fastener	4	6000 365	6000 365	---- ---	6000 365	
23-103-3	PANEL, Visor Trim R1, R2	2	---- ---	---- ---	1131 AW2		
	(codes L1B, K1B, L5B)	2	1118 AB3				
	(codes L1T, K1T, K2T, L5T, L8T, K8T, T8T)	2	1118 AT3				
	(codes L1R, K1R, L5R)	2	1118 AW2				
	(codes H1B, H4B, P4B)	2	1119 AB3	---- ---	---- ---	1119 AB3	
	(codes H1Q, H4Q, P4Q)	2	1119 AQ3	---- ---	---- ---	1119 AQ3	
	(code H1T)	2	1119 AT3	---- ---	---- ---	1119 AT3	
	(codes H1R, H4R, P4R)	2	1119 AW2	---- ---	---- ---	1119 AW2	
	(codes H1Y, H4Y, P4Y)	2	1119 AY3	---- ---	---- ---	1119 AY3	
	(codes H4X, P4X)	2	---- ---	---- ---	---- ---	1119 AX9	
	(codes H4B, P4B)	2	---- ---	---- ---	---- ---	---- ---	1120 AB4
	(codes H4Q, P4Q)	2	---- ---	---- ---	---- ---	---- ---	1120 AQ4
	(codes H4Y, P4Y)	2	---- ---	---- ---	---- ---	---- ---	1120 AY3
	(codes H4R, P4R)	2	---- ---	---- ---	---- ---	---- ---	1120 VR6
	(codes H4X, P4X)	2	---- ---	---- ---	---- ---	---- ---	1120 VX9
	P2-L, P2-M (code X1P)	2	1116 AX9				
	P1, P2 (embossed cardboard) (codes L1B, K1B, L5B, M1B, M5B, H1B, H5B)	2	1109 AB3				
	(codes M1Q, H1Q, H5Q)	2	1109 AQ3				
	(codes L1R, K1R, L5R, M1R, M5R)	2	1109 AR7				
	(codes L1T, K1T, L2T, K2T, L8T, K8T, T8T, L5T, M1T, M5T, H1T)	2	1109 AT3				
	(codes H1Y, H5Y)	2	1109 AY3				
	(codes H1R, H5R)	2	1109 AR7				
	(code H5X)	2	1109 AX9				
	(code X1P)	2	*1113 AA2				
	P1-H, P2-H, P2-P (vinyl covered)						
	(codes H2B, H5B, P4B)	2	---- ---	1104 AB3	---- ---	1104 AB3	
	(codes H2Q, H5Q, P4Q)	2	---- ---	1104 AQ3	---- ---	1104 AQ3	
	(codes H2R, H5R, P4R)	2	---- ---	1104 AR7	---- ---	1104 AR7	
	(codes H2Y, H5Y, P4Y)	2	---- ---	1104 AY3	---- ---	1104 AY3	
	(codes H5X, P4X, P4U)	2	---- ---	1104 AX9	---- ---	1104 AX9	
	(code H2T)	2	---- ---	---- ---	---- ---	1104 AT3	

★ Indicates use as required.
⊟ Indicates parts not listed in any previous parts book. Right and left part numbers are on same line, first number is right, second number is left.
* Indicates change or addition.

MyMopar.com

Printed in U.S.A.
Prices and specifications subject to change without notice.
April 1966, Supersedes May 1965.

CODE	REMARKS	PER CAR	SED.	4D H.T	STA. WGN.	2D H.T	CV. CP.
23-103-3	PANEL, Visor Trim - Cont'd						
	P1, P2 (perforated cardboard) (w/o air conditioning)						
	(codes L4B, K4B, M4B, H4B)	2	---- ---	---- ---	*1111 AB3		
	(codes M4Q, H4Q)	2	---- ---	---- ---	*1111 AQ3		
	(codes L4R, K4R, M4R, H4R)	2	---- ---	---- ---	*1111 AR7		
	(codes L4T, K4T, M4T, H4T)	2	---- ---	---- ---	*1111 AT3		
	(code H4Y)	2	---- ---	---- ---	*1111 AY3		
	P1, P2 (perforated cardboard) (w/air conditioning) (w/extruded vinyl binding)	2	---- ---	---- ---	1112 AW2		
	P2-H						
	(code H5B)	2	---- ---	---- ---	---- ---	---- ---	1107 AB4
	(code H5Q)	2	---- ---	---- ---	---- ---	---- ---	1107 AQ4
	(code H5R)	2	---- ---	---- ---	---- ---	---- ---	1107 AR7
	(code H5X)	2	---- ---	---- ---	---- ---	---- ---	1107 AX9
	(code H5Y)	2	---- ---	---- ---	---- ---	---- ---	1107 AY3
	P2-P						
	(code P4B)	2	---- ---	---- ---	---- ---	---- ---	1107 AB8
	(code P4Q)	2	---- ---	---- ---	---- ---	---- ---	1107 AQ8
	(code P4R)	2	---- ---	---- ---	---- ---	---- ---	1107 AR7
	(codes P4X, P4U)	2	---- ---	---- ---	---- ---	---- ---	1107 AX9
	(code P4Y)	2	---- ---	---- ---	---- ---	---- ---	1107 AY3
23-103-10	ARM and BRACKET, Visor R1, R2 (chrome)	1	2490 788-9	---- ---	2490 788-9	2490 788-9	2483 082-3
	ARM and BRACKET, Windshield Visor P1, P2 (chrome)	1	---- ---	2581 292-3	2581 292-3	2581 292-3	
	Washer	2	6000 106	6000 106	6000 106	6000 106	
23-103-18	SPACER, Windshield Wiper Bracket R1, R2	2	---- ---	---- ---	2581 373		
23-103-48	SUPPORT, Visor Inner P1, P2 (use w/padded visor)	2	2162 628	2162 628	2162 628	2162 628	
23-108-4	CUSHION, Front Seat R1-L, R2-L (2 D.)						
	(code L1B)	1	5357 A1B				
	(code L1R)	1	5357 A1R				
	(code L1T)	1	5357 A1T				
	(code L2T)	1	5380 A2T				
	(code L8T)	1	5389 A8T				
	R1-L, R2-L (4 D.)						
	(codes L1B, L4B)	1	5352 A1B	---- ---	5366 A4B		
	(codes L1R, L4R)	1	5352 A1R	---- ---	5366 A4R		
	(codes L1T, L4T)	1	5352 A1T	---- ---	5366 A4T		
	(code L5B)	1	5369 A4B	---- ---			
	(code L5R)						
	UP TO Serial No. 57-154604	1	5369 A4R				
	AFTER Serial No. 57-154604	1	5369 A5R				
	(code L5T)	1	5369 A4T				
	(code L2T)	1	5383 A2T				
	(code L8T)	1	5386 A8T				

★ Indicates use as required.
B Indicates parts not listed in any previous parts book.
April 1966, Supersedes May 1965.

Printed in U.S.A.
Prices and specifications subject to change without notice.
Right and left part numbers are on same line, first number is right, second number is left.
• Indicates change or addition.

MyMopar.com

CODE	REMARKS	PER CAR	SED.	4D H.T	STA. WGN.	2D H.T	CV. CP.
23-108-4	CUSHION. Front Seat - Cont'd						
	R1-L, R2-L (2 D.) (w/airfoam pad)						
	(code L1B)	1	5358 A1B				
	(code L1R)	1	5358 A1R				
	(code L1T)	1	5358 A1T				
	(code L2T)	1	5381 A2T				
	(code L8T)	1	5409 A8T				
	R1-L, R2-L (4 D.) (w/airfoam pad)						
	(codes L1B, L4B)	1	5353 A1B	---- ---	5367 A4B		
	(codes L1R, L4R)	1	5353 A1R	---- ---	5367 A4R		
	(codes L1T, L4T)	1	5353 A1T	---- ---	5367 A4T		
	(code L2T)	1	5384 A2T				
	(code L8T)	1	5387 A8T				
	R1-L, R2-L (2 D.) (w/airfoam pad and heavy duty spring)						
	(codes L1B, K1B)	1	5359 A1B				
	(codes L1R, K1R)	1	5359 A1R				
	(codes L1T, K1T)	1	5359 A1T				
	(codes L2T, K2T)	1	5382 A2T				
	(codes L8T, K8T)	1	5410 A8T				
	R1-L, R2-L (4 D.) (w/airfoam pad and heavy duty spring)						
	(codes L1B, K1B, L4B, K4B)	1	5354 A1B	---- ---	5368 A4B		
	(codes L1R, K1R, L4R, K4R)	1	5354 A1R	---- ---	5368 A4R		
	(codes L1T, K1T, L4T, K4T)	1	5354 A1T	---- ---	5368 A4T		
	(codes L2T, K2T)	1	5385 A2T				
	(codes L8T, K8T)	1	5388 A8T				
	R1-H, R2-H						
	(code H1B)	1	5362 A1B				
	(code H1Q)	1	5362 A1Q				
	(code H1R)	1	5362 A1R				
	(code H1T)	1	5362 A1T				
	(code H1Y)	1	5362 A1Y				
	(code H4B)	1	5369 A4B	---- ---	5369 A4B	5371 A4B	5371 A4B
	(code H4Q)	1	5369 A4Q	---- ---	5369 A4Q	5371 A4Q	5371 A4Q
	(code H4R)						
	UP TO Serial Nos. 57-154604, 57-132009, 57-146588	1	5369 A4R	---- ---	5369 A4R	5371 A4R	5371 A4R
	AFTER Serial Nos. 57-154604, 57-132009, 57-146588	1	5369 A5R	---- ---	5369 A5R	5371 A5R	5371 A5R
	(code H4T)	1	5369 A4T	---- ---	5369 A4T		
	(code H4Y)	1	5369 A4Y	---- ---	5369 A4Y	5371 A4Y	5371 A4Y
	(code H4X)	1	5369 V4X	---- ---	5369 V4X	5371 A4X	5371 A4X
	R2-P						
	(code P4B)	2	---- ---	---- ---	---- ---	*5378 A4B	*5378 A4B
	(code P4Q)	2	---- ---	---- ---	---- ---	*5378 A4Q	*5378 A4Q
	(code P4R)						
	UP TO Serial No. 57-151401	2	---- ---	---- ---	---- ---	5378 A4R	5378 A4R
	AFTER Serial No. 57-151401	2	---- ---	---- ---	---- ---	5378 A5R	5378 A5R
	(code P4X)	2	---- ---	---- ---	---- ---	*5378 A4X	*5378 A4X
	(code P4Y)	2	---- ---	---- ---	---- ---	*5378 A4Y	*5378 A4Y
	P1-L, P2-L (2 D.)						
	(code L1B)	1	5421 A1B				
	(code L1R)	1	5421 A1R				

★ Indicates use as required.
⊟ Indicates parts not listed in any previous parts book.
Right and left part numbers are on same line, first number is right, second number is left.
* Indicates change or addition.

Printed in U.S.A.
Prices and specifications subject to change without notice.
April 1966, Supersedes May 1965.

MyMopar.com

CODE	REMARKS	PER CAR	SED.	4D H.T	STA. WGN.	2D H.T	CV. CP.
23-108-4	CUSHION, Front Seat - Cont'd						
	P1-L, P2-L (2 D.)						
	(code L1T)	1	5421 A1T				
	(code L2T)	1	7435 A2T				
	(code L8T)	1	7475 A8T				
	P1-L, P2-L (4 D.)						
	(codes L1B, L4B)	1	5418 A1B	---- ---	5444 A4B		
	(codes L1R, L4R)	1	5418 A1R	---- ---	5444 A4R		
	(codes L1T, L4T)	1	5418 A1T	---- ---	5444 A4T		
	(code L5B)	1	5438 A5B				
	(code L5R)	1	5438 A5R				
	(code L5T)	1	5438 A5T				
	P1-L, P2-L (2 D.) (w/airfoam pad)						
	(code L1B)	1	5422 A1B				
	(code L1R)	1	5422 A1R				
	(code L1T)	1	5422 A1T				
	(code L2T)	1	7436 A2T				
	(code L8T)	1	7476 A8T				
	P1-L, P2-L (4 D.) (w/airfoam pad)						
	(codes L1B, L4B)	1	5419 A1B	---- ---	5445 A4B		
	(codes L1R, L4R)	1	5419 A1R	---- ---	5445 A4R		
	(codes L1T, L4T)	1	5419 A1T	---- ---	5445 A4T		
	P1-L, P2-L (2 D.) (w/airfoam pad and heavy duty spring)						
	(codes L1B, K1B)	1	5423 A1B				
	(codes L1R, K1R)	1	5423 A1R				
	(codes L1T, K1T)	1	5423 A1T				
	(codes L2T. K2T)	1	7437 A2T				
	(codes L8T, K8T)	1	7477 A8T				
	P1-L, P2-L (4 D.) (w/airfoam pad and heavy duty spring)						
	(codes L1B, K1B, L4B, K4B)	1	5420 A1B	---- ---	5448 A4B		
	(codes L1R, K1R, L4R, K4R)	1	5420 A1R	---- ---	5448 A4R		
	(codes L1T, K1T, L4T, K4T)	1	5420 A1T	---- ---	5448 A4T		
	P1-M, P2-M (2 D.)						
	(code M1B)	1	5360 A1B				
	(code M1Q)	1	5360 A1Q				
	(code M1R)	1	5360 A1R				
	(code M1T)	1	5360 A1T				
	P1-M, P2-M (4 D.)						
	(codes M1B, M4B)	1	5355 A1B	---- ---	5373 A4B		
	(codes M1Q, M4Q)	1	5355 A1Q	---- ---	5373 A4Q		
	(codes M1R, M4R)	1	5355 A1R	---- ---	5373 A4R		
	(codes M1T, M4T)	1	5355 A1T	---- ---	5373 A4T		
	P1-H, P2-H (elec. 6 way)						
	(codes H1B, H4B, H2B)	1	7519 A1B	7519 A1B	7529 A4B	5374 A2B	
	(codes H1Q, H4Q, H2Q)	1	7519 A1Q	7519 A1Q	7529 A4Q	5374 A2Q	
	(codes H1R, H4R, H2R)	1	7519 A1R	7519 A1R	7529 A4R	5374 A2R	
	(codes H1T, H4T, H2T)	1	7519 A1T	7519 A1T	7529 A4T	5374 A2T	
	(codes H1Y, H4Y, H2Y)	1	7519 A1Y	7519 A1Y	7529 A4Y	5374 A2Y	
	(code H5B)	1	5325 A5B	5325 A5B	---- ---	5351 A5B	5351 A5B
	(code H5Q)	1	5325 A5Q	5325 A5Q	---- ---	5351 A5Q	5351 A5Q
	(code H5R)	1	5325 A5R	5325 A5R	---- ---	5351 A5R	5351 A5R
	(code H5X)	1	5325 A5X	5325 A5X	---- ---	5351 A5X	5351 A5X
	(code H5Y)	1	5325 A5Y	5325 A5Y	---- ---	5351 A5Y	5351 A5Y

★ Indicates use as required.
⊟ Indicates parts not listed in any previous parts book.

MyMopar.com

Printed in U.S.A.
Prices and specifications subject to change without notice.
Right and left part numbers are on same line, first number is right, second number is left.
* Indicates change or addition.

CODE	REMARKS	PER CAR	SED.	4D H.T	STA. WGN.	2D H.T	CV. CP.
23-108-4	CUSHION, Front Seat - Cont'd						
	P1-H, P2-H (manual)						
	(codes H1B, H4B, H2B)	1	*7518 A1B	*7518 A1B	*7528 A4B	*5356 A2B	
	(codes H1Q, H4Q, H2Q)	1	7518 A1Q	7518 A1Q	7528 A4Q	5356 A2Q	
	(codes H1R, H4R, H2R)	1	7518 A1R	7518 A1R	7528 A4R	5356 A2R	
	(codes H1T, H4T, H2T)	1	7518 A1T	7518 A1T	7528 A4T	5356 A2T	
	(codes H1Y, H4Y, H2Y)	1	7518 A1Y	7518 A1Y	7528 A4Y	5356 A2Y	
	(code H5B)	1	*7523 A5B	*7523 A5B	---- ---	5350 A5B	5350 A5B
	(code H5Q)	1	*7523 A5Q	*7523 A5Q	---- ---	5350 A5Q	5350 A5Q
	(code H5R)	1	*7523 A5R	*7523 A5R	---- ---	5350 A5R	5350 A5R
	(code H5X)	1	*7523 A5X	*7523 A5X	---- ---	5350 A5X	5350 A5X
	(code H5Y)	1	*7523 A5Y	*7523 A5Y	---- ---	5350 A5Y	5350 A5Y
	Push-Nut	★	---- ---	---- ---	---- ---	6024 203	6024 203
	P2-P						
	(code P4B)	1	---- ---	---- ---	---- ---	7254-5 A4B	7254-5 A4B
	(code P4Q)	1	---- ---	---- ---	---- ---	7254-5 A4Q	7254-5 A4Q
	(code P4R)	1	---- ---	---- ---	---- ---	7254-5 A4R	7254-5 A4R
	(code P4X)	1	---- ---	---- ---	---- ---	7254-5 A4X	7254-5 A4X
	(code P4Y)	1	---- ---	---- ---	---- ---	7254-5 A4Y	7254-5 A4Y
	(code P4U)	1	---- ---	---- ---	---- ---	7254-5 A4U	7254-5 A4U
	P2-P (power seats)						
	(code P4B)	1	---- ---	---- ---	---- ---	7632-3 A4B	7632-3 A4B
	(code P4Q)	1	---- ---	---- ---	---- ---	7632-3 A4Q	7632-3 A4Q
	(code P4R)	1	---- ---	---- ---	---- ---	7632-3 A4R	7632-3 A4R
	(code P4X)	1	---- ---	---- ---	---- ---	7632-3 A4X	7632-3 A4X
	(code P4Y)	1	---- ---	---- ---	---- ---	7632-3 A4Y	7632-3 A4Y
	(code P4U)	1	---- ---	---- ---	---- ---	7632-3 A4U	7632-3 A4U
23-108-5	COVER, Front Seat Cushion						
	R1-L, R2-L (2 D.)						
	(codes L1B, K1B)	1	5825 A1B				
	(codes L1R, K1R)	1	5825 A1R				
	(codes L1T, K1T)	1	5825 A1T				
	(codes L2T, K2T)	1	5836 A2T				
	(codes L8T, K8T)	1	5838 A8T				
	R1-L, R2-L (4 D.)						
	(codes L1B, K1B, L4B, K4B)	1	5823 A1B	---- ---	5829 A4B		
	(codes L1R, K1R, L4R, K4R)	1	5823 A1R	---- ---	5829 A4R		
	(codes L1T, K1T, L4T, K4T)	1	5823 A1T	---- ---	5829 A4T		
	(code L5B)	1	5830 A4B				
	(code L5R)						
	UP TO Serial No. 57-154604	1	5830 A4R				
	AFTER Serial No. 57-154604	1	5830 A5R				
	(code L5T)	1	5830 A4T				
	(codes L2T, K2T)	1	5835 A2T				
	(codes L8T, K8T, T8T)	1	5837 A8T				
	R1-H, R2-H						
	(code H1B)	1	5827 A1B	---- ---	---- ---	5828 A1B	
	(code H1Q)	1	5827 A1Q	---- ---	---- ---	5828 A1Q	
	(code H1R)	1	5827 A1R	---- ---	---- ---	5828 A1R	
	(code H1T)	1	5827 A1T	---- ---	---- ---	5828 A1T	
	(code H1Y)	1	5827 A1Y	---- ---	---- ---	5828 A1Y	
	(code H4B)	1	5830 A4B	---- ---	5830 A4B	5831 A4B	5831 A4B
	(code H4Q)	1	5830 A4Q	---- ---	5830 A4Q	5831 A4Q	5831 A4Q
	(code H4R)						
	UP TO Serial Nos. 57-154604, 57-32009, 57-146588	1	5830 A4R	---- ---	5830 A4R	5831 A4R	5831 A4R
	AFTER Serial Nos. 57-154604, 57-132009, 57-146588	1	5830 A5R	---- ---	5830 A5R	5831 A5R	5831 A5R
	(code H4T)	1	5830 A4T	---- ---	5830 A4T		
	(code H4Y)	1	5830 A4Y	---- ---	5830 A4Y	5831 A4Y	5831 A4Y
	(code H4X)	1	---- ---	---- ---	---- ---	5831 A4X	5831 A4X

★ Indicates use as required.
⊟ Indicates parts not listed in any previous parts book.
Right and left part numbers are on same line, first number is right, second number is left.
* Indicates change or addition.

MyMopar.com

Printed in U.S.A.
Prices and specifications subject to change without notice.
April 1966, Supersedes May 1965.

CODE	REMARKS	PER CAR	SED.	4D H.T	STA. WGN.	2D H.T	CV. CP.
23-108-5	COVER, Front Seat Cushion - Cont'd						
	R2-P						
	(code P4B)	2	---- ---	---- ---	---- ---	5834 A4B	5834 A4B
	(code P4Q)	2	---- ---	---- ---	---- ---	5834 A4Q	5834 A4Q
	(code P4R)	2	---- ---	---- ---	---- ---	5834 A4R	5834 A4R
	(code P4X)	2	---- ---	---- ---	---- ---	5834 A4X	5834 A4X
	(code P4Y)	2	---- ---	---- ---	---- ---	5834 A4Y	5834 A4Y
	(code P4R)						
	UP TO Serial No. 57-151401	2	---- ---	---- ---	---- ---	5834 A4R	5834 A4R
	AFTER Serial No. 57-151401	2	---- ---	---- ---	---- ---	5834 A5R	5834 A5R
	P1-L, P2-L (2 D.)						
	(codes L1B, K1B)	1	5841 A1B				
	(codes L1R, K1R)	1	5841 A1R				
	(codes L1T, K1T)	1	5841 A1T				
	(codes L2T, K2T)	1	7438 A2T				
	(codes L8T, K8T)	1	7478 A8T				
	P1-L, P2-L (4 D.)						
	(codes L1B, K1B)	1	5840 A1B				
	(codes L1R, K1R)	1	5840 A1R				
	(codes L1T, K1T)	1	5840 A1T				
	(codes L2T, K2T)	1	7434 A2T				
	(codes L8T, K8T, T8T)	1	7356 A8T				
	(codes L5B, L4B, K4B)	1	5861 A5B	---- ---	5842 A4B		
	(codes L5R, L4R, K4R)	1	5861 A5R	---- ---	5842 A4R		
	(codes L5T, L4T, K4T)	1	5861 A5T	---- ---	5842 A4T		
	P1-M, P2-M (2 D.)						
	(code M1B)	1	5826 A1B				
	(code M1Q)	1	5826 A1Q				
	(code M1R)	1	5826 A1R				
	(code M1T)	1	5826 A1T				
	P1-M, P2-M (4 D.)						
	(codes M1B, M4B)	1	5824 A1B	---- ---	5832 A4B		
	(codes M1Q, M4Q)	1	5824 A1Q	---- ---	5832 A4Q		
	(codes M1R, M4R)	1	5824 A1R	---- ---	5832 A4R		
	(codes M1T, M4T)	1	5824 A1T	---- ---	5832 A4T		
	(code M5B)	1	5861 A5B				
	(code M5R)	1	5861 A5R				
	(code M5T)	1	5861 A5T				
	P1-H, P2-H						
	(codes H1B, H4B, H2B)	1	7517 A1B	7517 A1B	7527 A4B	5821 A2B	
	(codes H1Q, H4Q, H2Q)	1	7517 A1Q	7517 A1Q	7527 A4Q	5821 A2Q	
	(codes H1R, H4R, H2R)	1	7517 A1R	7517 A1R	7527 A4R	5821 A2R	
	(codes H1T, H4T, H2T)	1	7517 A1T	7517 A1T	7527 A4T	5821 A2T	
	(codes H1Y, H4Y, H2Y)	1	7517 A1Y	7517 A1Y	7527 A4Y	5821 A2Y	
	(code H5B)	1	7522 A5B	7522 A5B	---- ---	5856 A5B	5856 A5B
	(code H5Q)	1	7522 A5Q	7522 A5Q	---- ---	5856 A5Q	5856 A5Q
	(code H5R)	1	7522 A5R	7522 A5R	---- ---	5856 A5R	5856 A5R
	(code H5X)	1	7522 A5X	7522 A5X	---- ---	5856 A5X	5856 A5X
	(code H5Y)	1	7522 A5Y	7522 A5Y	---- ---	5856 A5Y	5856 A5Y
	P2-P						
	(code P4B)	1	---- ---	---- ---	---- ---	7253 A4B	7253 A4B
	(code P4Q)	1	---- ---	---- ---	---- ---	7253 A4Q	7253 A4Q
	(code P4R)	1	---- ---	---- ---	---- ---	7253 A4R	7253 A4R
	(code P4X)	1	---- ---	---- ---	---- ---	7253 A4X	7253 A4X
	(code P4Y)	1	---- ---	---- ---	---- ---	7253 A4Y	7253 A4Y
	(code P4U)	1	---- ---	---- ---	---- ---	7253 A4U	7253 A4U

★ Indicates use as required.
⊟ Indicates parts not listed in any previous parts book.
April 1966, Supersedes May 1965.

Printed in U.S.A.
Prices and specifications subject to change without notice.
Right and left part numbers are on same line, first number is right, second number is left.
* Indicates change or addition.

MyMopar.com

CODE	REMARKS	PER CAR	SED.	4D H.T	STA. WGN.	2D H.T	CV. CP.
23-108-6	FLAP, Front Cushion Rear						
	P2-P						
	(code P4B)	2	---- ---	---- ---	---- ---	*4112 AB8	*4112 AB8
	(code P4Q)	2	---- ---	---- ---	---- ---	*4112 AQ8	*4112 AQ8
	(code P4R)	2	---- ---	---- ---	---- ---	*4112 AR7	*4112 AR7
	(codes P4X, P4U)	2	---- ---	---- ---	---- ---	*4112 AX9	*4112 AX9
	(code P4Y)	2	---- ---	---- ---	---- ---	*4112 AY8	*4112 AY8
23-108-12	BACK, Front Seat						
	R1-L, R2-L (2 D.)						
	(code L1B)	1	5552-3 A1B				
	(code L1R)	1	5552-3 A1R				
	(code L1T)	1	5552-3 A1T				
	R1-L, R2-L (4 D.)						
	(codes L1B, L4B)	1	5547 A1B	---- ---	5562 A4B		
	(codes L1R, L4R)	1	5547 A1R	---- ---	5562 A4R		
	(codes L1T, L4T)	1	5547 A1T	---- ---	5562 A4T		
	(code L5B)	1	5569 A4B				
	(code L5R)						
	UP TO Serial No. 57-154604	1	5569 A4R				
	AFTER Serial No. 57-154604	1	5569 A5R				
	(code L5T)	1	5569 A4T				
	(w/heavy duty spring and airfoam pad)						
	(codes L1B, K1B)	1	5549 A1B				
	(codes L1R, K1R)	1	5549 A1R				
	(codes L1T, K1T)	1	5549 A1T				
	(w/heavy duty spring)						
	(codes L2T, K2T)	1	5574 A2T				
	(codes L4B, K4B)	1	---- ---	---- ---	5563 A4B		
	(codes L4R, K4R)	1	---- ---	---- ---	5563 A4R		
	(codes L4T, K4T)	1	---- ---	---- ---	5563 A4T		
	R1-H, R2-H						
	(code H1B)	1	5548 A1B	---- ---	---- ---	5554-5 A1B	
	(code H1Q)	1	5548 A1Q	---- ---	---- ---	5554-5 A1Q	
	(code H1R)	1	5548 A1R	---- ---	---- ---	5554-5 A1R	
	(code H1T)	1	5548 A1T	---- ---	---- ---	5554-5 A1T	
	(code H1Y)	1	5548 A1Y	---- ---	---- ---	5554-5 A1Y	
	(code H4B)	1	5569 A4B	---- ---	5569 A4B	5566-7 A4B	5566-7 A4B
	(code H4Q)	1	5569 A4Q	---- ---	5569 A4Q	5566-7 A4Q	5566-7 A4Q
	(code H4R)						
	UP TO Serial Nos. 57-154604, 57-132009, 57-146588	1	5569 A4R	---- ---	5569 A4R	5566-7 A4R	5566-7 A4R
	AFTER Serial Nos. 57-154604, 57-132009, 57-146588	1	5569 A5R	---- ---	5569 A5R	5566-7 A5R	5566-7 A5R
	(code H4T)	1	5569 A4T	---- ---	5569 A4T		
	(code H4Y)	1	5569 A4Y	---- ---	5569 A4Y	5566-7 A4Y	5566-7 A4Y
	(code H4X)	1	---- ---	---- ---	---- ---	*5566-7 A4X	*5566-7 A4X
	Push-Nut (back to cushion)	2	6024 203	---- ---	---- ---	6024 203	6024 203
	P1-L, P2-L (2 D.)						
	(code L1B)	1	5590-1 A1B				
	(code L1R)	1	5590-1 A1R				
	(code L1T)	1	5590-1 A1T				
	(code L2T)	1	7442-3 A2T				
	(code L8T)	1	7422-3 A8T				
	P1-L, P2-L (4 D.)						
	(codes L1B, L4B)	1	5583 A1B	---- ---	5624 A4B		
	(codes L1R, L4R)	1	5583 A1R	---- ---	5624 A4R		
	(codes L1T, L4T)	1	5583 A1T	---- ---	5624 A4T		

★ Indicates use as required.
⊟ Indicates parts not listed in any previous parts book.
Right and left part numbers are on same line, first number is right, second number is left.
* Indicates change or addition.

MyMopar.com

Printed in U.S.A.
Prices and specifications subject to change without notice.
April 1966, Supersedes May 1965.

CODE	REMARKS	PER CAR	SED.	4D H.T	STA. WGN.	2D H.T.	CV. CP.
23-108-12	Back, Front Seat - Cont'd						
	P1-L, P2-L (4 D.)						
	UP TO Serial No. 107818 except, Trim Code L5R UP TO Serial No. 134088						
	(code L5B)	1	5642 A5B				
	(code L5R)	1	5642 A5R				
	(code L5T)	1	5642 A5T				
	AFTER Serial No. 107818 except, Trim Code L5R AFTER Serial No. 134088						
	(code L5B)	1	7749 A5B				
	(code L5R)	1	7749 A5R				
	(code L5T)	1	7749 A5T				
	P1-L, P2-L (2 D.) (w/heavy duty spring)						
	(codes L1B, K1B)	1	5592-3 A1B				
	(codes L1R, K1R)	1	5592-3 A1R				
	(codes L1T, K1T)	1	5592-3 A1T				
	(codes L2T, K2T)	1	7444-5 A2T				
	(codes L8T, K8T)	1	7424-5 A8T				
	P1-L, P2-L (4 D.) (w/heavy duty spring)						
	(codes L1B, L4B, K1B, K4B)	1	5587 A1B	---- ---	5625 A4B		
	(codes L1R, L4R, K1R, K4R)	1	5587 A1R	---- ---	5625 A4R		
	(codes L1T, L4T, K1T, K4T)	1	5587 A1T	---- ---	5625 A4T		
	UP TO Serial No. 107818 except, Trim Code L5R UP TO Serial No. 134088						
	(code L5B)	1	5643 A5B				
	(code L5R)	1	5643 A5R				
	(code L5T)	1	5643 A5T				
	AFTER Serial No. 107818 except, Trim Code L5R UP TO Serial No. 134088						
	(code L5B)	1	7776 A5B				
	(code L5R)	1	7776 A5R				
	(code L5T)	1	7776 A5T				
	P1-M, P2-M (2 D.)						
	UP TO Serial No. 107818 except, Trim Code M1R UP TO Serial No. 134088						
	(code M1B)	1	5558-9 A1B				
	(code M1Q)	1	5558-9 A1Q				
	(code M1R)	1	5558-9 A1R				
	(code M1T)	1	5558-9 A1T				
	Trim Code M1R AFTER Serial No. 107818 except, No. 134088						
	(code M1B)	1	7750-1 A1B				
	(code M1Q)	1	7750-1 A1Q				
	(code M1R)	1	7750-1 A1R				
	(code M1T)	1	7750-1 A1T				
	P1-M, P2-M						
	(codes M1B, M4B)	1	5550 A1B	---- ---	5565 A4B		
	(codes M1Q, M4Q)	1	5550 A1Q	---- ---	5565 A4Q		
	(codes M1R, M4R)	1	5550 A1R	---- ---	5565 A4R		
	(codes M1T, M4T)	1	5550 A1T	---- ---	5565 A4T		
	(code M5B)	1	5642 A5B				
	(code M5R)	1	5642 A5R				
	(code M5T)	1	5642 A5T				

★ Indicates use as required.
⊟ Indicates parts not listed in any previous parts book.
April 1966, Supersedes May 1965.

MyMopar.com

Printed in U.S.A.
Prices and specifications subject to change without notice.
Right and left part numbers are on same line, first number is right, second number is left.
* Indicates change or addition.

CODE	REMARKS	PER CAR	SED.	4D H.T	STA. WGN.	2D H.T	CV. CP.
23-108-12	BACK, Front Seat - Cont'd						
	P1-L, P2-L (2 D.)						
	AFTER Serial No. 107818 except, Trim Codes M1R, M4R, M5R AFTER Serial No. 134088						
	(codes M1B, M4B)	1	7745 A1B	---- ---	7757 A4B		
	(codes M1Q, M4Q)	1	7745 A1Q	---- ---	7757 A4Q		
	(codes M1R, M4R)	1	7745 A1R	---- ---	7757 A4R		
	(codes M1T, M4T)	1	7745 A1T	---- ---	7757 A4T		
	(code M5B)	1	7776 A5B				
	(code M5R)	1	7776 A5R				
	(code M5T)	1	7776 A5T				
	P1-H, P2-H						
	(codes H1B, H4B, H2B)	1	7521 A1B	7521 A1B	7531 A4B	5518-9 A2B	
	(codes H1Q, H4Q, H2Q)	1	7521 A1Q	7521 A1Q	7531 A4Q	5518-9 A2Q	
	(codes H1R, H4R, H2R)	1	7521 A1R	7521 A1R	7531 A4R	5518-9 A2R	
	(codes H1T, H4T, H2T)	1	7521 A1T	7521 A1T	7531 A4T	5518-9 A2T	
	(codes H1Y, H4Y, H2Y)	1	7521 A1Y	7521 A1Y	7531 A4Y	5518-9 A2Y	
	P1-H, P2-H						
	(code H5B)	1	7526 A5B	7526 A5B	---- ---	5630-1 A5B	5630-1 A5B
	(code H5Q)	1	7526 A5Q	7526 A5Q	---- ---	5630-1 A5Q	5630-1 A5Q
	(code H5R)	1	7526 A5R	7526 A5R	---- ---	5630-1 A5R	5630-1 A5R
	(code H5X)	1	7526 A5X	7526 A5X	---- ---	5630-1 A5X	5630-1 A5X
	(code H5Y)	1	7526 A5Y	7526 A5Y	---- ---	5630-1 A5Y	5630-1 A5Y
23-108-15	SPRING and COVER, Front Seat Back						
	R2-P						
	(code P4B)	2	---- ---	---- ---	---- ---	5726 A4B	5726 A4B
	(code P4Q)	2	---- ---	---- ---	---- ---	5726 A4Q	5726 A4Q
	(code P4R)	2	---- ---	---- ---	---- ---	*5726 A4R	5726 A4R
	(code P4X)	2	---- ---	---- ---	---- ---	5726 A4X	5726 A4X
	(code P4Y)	2	---- ---	---- ---	---- ---	5726 A4Y	5726 A4Y
	P2-P						
	(code P4B)	2	---- ---	---- ---	---- ---	7257 A4B	7257 A4B
	(code P4Q)	2	---- ---	---- ---	---- ---	7257 A4Q	7257 A4Q
	(code P4R)	2	---- ---	---- ---	---- ---	7257 A4R	7257 A4R
	(code P4X)	2	---- ---	---- ---	---- ---	7257 A4X	7257 A4X
	(code P4Y)	2	---- ---	---- ---	---- ---	7257 A4Y	7257 A4Y
	(code P4U)	2	---- ---	---- ---	---- ---	7257 A4U	7257 A4U
	Screw (back to cushion wedge spring)	2	---- ---	---- ---	---- ---	6016 005	6016 005
23-108-16	COVER, Front Seat Back						
	R1-L, R2-L (2 D.)						
	(codes L1B, K1B)	1	5954-5 A1B				
	(codes L1R, K1R)	1	5954-5 A1R				
	(codes L1T, K1T)	1	5954-5 A1T				
	(codes L2T, K2T)	1	5968-9 A2T				
	(codes L8T, K8T)	1	5972-3 A8T				
	R1-L, R2-L (4 D.)						
	(codes L1B, K1B, L4B)	1	5951 A1B	---- ---	5953 A4B		
	(codes L1R, K1R, L4R)	1	5951 A1R	---- ---	5953 A4R		
	(codes L1T, K1T, L4T)	1	5951 A1T	---- ---	5953 A4T		
	(code L5B)	1	5965 A4B				
	(code L5R)						
	UP TO Serial No. 57-154604	1	5965 A4R				
	AFTER Serial No. 57-154604	1	5965 A5R				
	(code L5T)	1	5965 A4T				
	(codes L2T, K2T)	1	5967 A2T				
	(codes L8T, K8T, T8T)	1	5970 A8T				

★ Indicates use as required.
⊖ Indicates parts not listed in any previous parts book.
Right and left part numbers are on same line, first number is right, second number is left.
* Indicates change or addition.

MyMopar.com

Printed in U.S.A.
Prices and specifications subject to change without notice.
April 1966, Supersedes May 1965.

CODE	REMARKS	PER CAR	SED.	4D H.T	STA. WGN.	2D H.T.	CV. CP.
23-108-16	COVER, Front Seat Back - Cont'd						
	R1-H, R2-H						
	(code H1B)	1	5960 A1B	---- ---	---- ---	5958-9 A1B	
	(code H1Q)	1	5960 A1Q	---- ---	---- ---	5958-9 A1Q	
	(code H1R)	1	5960 A1R	---- ---	---- ---	5958-9 A1R	
	(code H1T)	1	5960 A1T	---- ---	---- ---	5958-9 A1T	
	(code H1Y)	1	5960 A1Y	---- ---	---- ---	5958-9 A1Y	
	(code H4B)	1	5965 A4B	---- ---	5965 A4B	5962-3 A4B	5962-3 A4B
	(code H4Q)	1	5965 A4Q	---- ---	5965 A4Q	5962-3 A4Q	5962-3 A4Q
	(code H4R)						
	UP TO Serial Nos. 57-154604, 57-132009, 57-146588	1	*5965 A4R	---- ---	*5965 A4R	*5962-3 A4R	*5962-3 A4R
	AFTER Serial Nos. 57-154604, 57-132009, 57-146588	1	⊟5965 A5R	---- ---	⊟5965 A5R	⊟5962-3 A5R	⊟5962-3 A5R
	(code H4T)	1	5965 A4T	---- ---	5965 A4T		
	(code H4Y)	1	5965 A4Y	---- ---	5965 A4Y	5962-3 A4Y	5962-3 A4Y
	(code H4X)	1	---- ---	---- ---	---- ---	5962-3 A4X	5962-3 A4X
	R2-P						
	(code P4B)	2	---- ---	---- ---	---- ---	5966 A4B	5966 A4B
	(code P4Q)	2	---- ---	---- ---	---- ---	5966 A4Q	5966 A4Q
	(code P4R)						
	UP TO Serial No. 57-151401	2	---- ---	---- ---	---- ---	5966 A4R	5966 A4R
	AFTER Serial No. 57-151401	2	---- ---	---- ---	---- ---	5966 A5R	5966 A5R
	(code P4X)	2	---- ---	---- ---	---- ---	5966 A4X	5966 A4X
	(code P4Y)	2	---- ---	---- ---	---- ---	5966 A4Y	5966 A4Y
	P1-L, P2-L (2 D.)						
	(codes L1B, K1B)	1	5974-5 A1B				
	(codes L1R, K1R)	1	5974-5 A1R				
	(codes L1T, K1T)	1	5974-5 A1T				
	(code L2T)	1	7446-7 A2T				
	(code L8T)	1	7426-7 A8T				
	P1-L, P2-L (4 D.)						
	(codes L1B, K1B, L4B)	1	5976 A1B	---- ---	5977 A4B		
	(codes L1R, K1R, L4R)	1	5976 A1R	---- ---	5977 A4R		
	(codes L1T, K1T, L4T)	1	5976 A1T	---- ---	5977 A4T		
	UP TO Serial No. 107818 except, Trim Code L5R UP TO Serial No. 134088						
	(code L5B)	1	6030 A5B				
	(code L5R)	1	6030 A5R				
	(code L5T)	1	6030 A5T				
	AFTER Serial No. 107818 except, Trim Code L5R AFTER Serial No. 134088						
	(code L5B)	1	7754 A5B				
	(code L5R)	1	7754 A5R				
	(code L5T)	1	7754 A5T				
	(codes L2T, K2T)	1	7430 A2T				
	(codes L8T, K8T, T8T)	1	5985 A8T				
	P1-M, P2-M (2 D.)						
	UP TO Serial No. 107818 except, Trim Code M1R UP TO Serial No. 134088						
	(code M1B)	1	5956-7 A1B				
	(code M1Q)	1	5956-7 A1Q				
	(code M1R)	1	5956-7 A1R				
	(code M1T)	1	5956-7 A1T				

★ Indicates use as required.
⊟ Indicates parts not listed in any previous parts book.

Printed in U.S.A.
Prices and specifications subject to change without notice.
Right and left part numbers are on same line, first number is right, second number is left.
* Indicates change or addition.
MyMopar.com

CODE	REMARKS	PER CAR	SED.	4D H.T	STA. WGN.	2D H.T	CV. CP.
23-108-16	COVER, Front Seat Back - Cont'd						
	P1-M, P2-M (2 D.)						
	AFTER Serial No. 107818 except, Trim Code M1R AFTER Serial No. 134088						
	(code M1B)	1	*7578-9 A1B				
	(code M1Q)	1	7752-3 A1Q				
	(code M1R)	1	7752-3 A1R				
	(code M1T)	1	7752-3 A1T				
	UP TO Serial No. 107818 except, Trim Codes M1R, M4R, M5R, UP TO Serial No. 134088						
	P1-M, P2-M (4 D.)						
	(codes M1B, M4B)	1	5952 A1B	---- ---	*7758 A4B		
	(codes M1Q, M4Q)	1	5952 A1Q	---- ---	*7758 A4Q		
	(codes M1R, M4R)	1	*7746 A1R	---- ---	*5964 A4R		
	(codes M1T, M4T)	1	5952 A1T	---- ---	5964 A4T		
	(code M5B)	1	6030 A5B				
	(code M5R)	1	6030 A5R				
	(code M5T)	1	6030 A5T				
	AFTER Serial No. 107818 except, Trim Codes M1R, M4R, M5R AFTER Serial No. 134088						
	(codes M1B, M4B)	1	7746 A1B	---- ---	7758 A4B		
	(codes M1Q, M4Q)	1	7746 A1Q	---- ---	7758 A4Q		
	(codes M1R, M4R)	1	7746 A1R	---- ---	7758 A4R		
	(codes M1T, M4T)	1	7746 A1T	---- ---	7758 A4T		
	(code M5B)	1	7754 A5B				
	(code M5R)	1	7754 A5R				
	(code M5T)	1	7754 A5T				
	P1-H, P2-H						
	(codes H1B, H4B, H2B)	1	7520 A1B	7520 A1B	7530 A4B	5912-3 A2B	
	(codes H1Q, H4Q, H2Q)	1	7520 A1Q	7520 A1Q	7530 A4Q	5912-3 A2Q	
	(codes H1R, H4R, H2R)	1	7520 A1R	7520 A1R	7530 A4R	5912-3 A2R	
	(codes H1T, H4T, H2T)	1	7520 A1T	7520 A1T	7530 A4T	5912-3 A2T	
	(codes H1Y, H4Y, H2Y)	1	7520 A1Y	7520 A1Y	7530 A4Y	5912-3 A2Y	
	(code H5B)	1	7525 A5B	7525 A5B	---- ---	5982-3 A5B	5982-3 A5B
	(code H5Q)	1	7525 A5Q	7525 A5Q	---- ---	5982-3 A5Q	5982-3 A5Q
	(code H5R)	1	7525 A5R	7525 A5R	---- ---	5982-3 A5R	5982-3 A5R
	(code H5X)	1	7525 A5X	7525 A5X	---- ---	5982-3 A5X	5982-3 A5X
	(code H5Y)	1	7525 A5Y	7525 A5Y	---- ---	5982-3 A5Y	5982-3 A5Y
	P2-P						
	(code P4B)	1	---- ---	---- ---	---- ---	7258 A4B	7258 A4B
	(code P4Q)	1	---- ---	---- ---	---- ---	7258 A4Q	7258 A4Q
	(code P4R)	1	---- ---	---- ---	---- ---	7258 A4R	7258 A4R
	(code P4X)	1	---- ---	---- ---	---- ---	7258 A4X	7258 A4X
	(code P4Y)	1	---- ---	---- ---	---- ---	7258 A4Y	7258 A4Y
	(code P4U)	1	---- ---	---- ---	---- ---	7258 A4U	7258 A4U
23-108-32	BACK, Back of Front Seat						
	R2-P						
	(code P4B)	2	---- ---	---- ---	---- ---	6122 A4B	6122 A4B
	(code P4Q)	2	---- ---	---- ---	---- ---	6122 A4Q	6122 A4Q
	(code P4R)	2	---- ---	---- ---	---- ---	6122 A4R	6122 A4R
	(code P4X)	2	---- ---	---- ---	---- ---	6122 A4X	6122 A4X
	(code P4Y)	2	---- ---	---- ---	---- ---	6122 A4Y	6122 A4Y
	P2-P						
	(code P4B)	2	---- ---	---- ---	---- ---	7259 A4B	
	(code P4Q)	2	---- ---	---- ---	---- ---	7259 A4Q	
	(code P4R)	2	---- ---	---- ---	---- ---	7259 A4R	
	(codes P4X, P4U)	2	---- ---	---- ---	---- ---	7259 A4X	
	(code P4Y)	2	---- ---	---- ---	---- ---	7259 A4Y	

★ *Indicates use as required.*
⊟ Indicates parts not listed in any previous parts book.
Right and left part numbers are on same line, first number is right, second number is left.
* Indicates change or addition.

MyMopar.com

Printed in U.S.A.
Prices and specifications subject to change without notice.
April 1966, Supersedes May 1965.

CODE	REMARKS	PER CAR	SED.	4D H.T	STA. WGN.	2D H.T	CV. CP.
23-108-57	NUT, Front Seat Cushion Bumper to Rear Rail Head						
	R1-L, R2-L, P1-L, P2-L	4	2094 869				
23-108-84	COVER, Front Seat Back Side Hinge (paint as required)						
	R1, R2 Right	1	4338 VT6	---- ---	---- ---	4338 VT6	4338 VT6
	Left	1	4337 VX9	---- ---	---- ---	4337 VX9	4337 VX9
	P1, P2 (paint as required) (2D)	1	4440-1AT6				
	R2-P, P2-P (paint as required)	4	---- ---	---- ---	---- ---	4390 VT6	4390 VT6
	Clip (attaching)	2	6008 221	---- ---	---- ---	6008 221	6008 221
23-108-98	SHIELD, Front Seat Side						
	R1-H, R2-H (back)	2	---- ---	---- ---	---- ---	2494 106	2494 106
	R2-P (back)	2	---- ---	---- ---	---- ---	2440 219	2440 219
	(cushion)	2	---- ---	---- ---	---- ---	2440 340	2440 340
	P2-H, P2-P (back)	4	---- ---	---- ---	---- ---	2440 219	2440 219
	(cushion)	2	---- ---	---- ---	---- ---	2440 340	2440 340
	P1-H, P2-H						
	(side shield comp.) Right	1	2577 206	2577 206	2577 206		
	(manual) Left	1	2577 207	2577 207	2577 207		
	(power) Left	1	2577 209	2577 209	2577 209		
	(cushion) Right	1	---- ---	---- ---	---- ---	2577 202	2577 202
	(manual) Left	1	---- ---	---- ---	---- ---	2577 203	2577 203
	(power) Left	1	---- ---	---- ---	---- ---	2577 205	2577 205
23-109-3	BACK, Rear Seat						
	R1-L, R2-L (2nd seat)						
	(codes L1B, L4B)	1	6548 A1B	---- ---	6556 A4B		
	(codes L1R, L4R)	1	6548 A1R	---- ---	6556 A4R		
	(codes L1T, L4T)	1	6548 A1T	---- ---	6556 A4T		
	(code L5B)	1	6562 A4B				
	(code L5R)						
	UP TO Serial No. 57-154604	1	6562 A4R				
	AFTER Serial No. 57-154604	1	6562 A5R				
	(code L5T)	1	6562 A4T				
	(code L2T)	1	6566 A2T				
	(code L8T)	1	6568 A8T				
	R1-L, R2-L (w/heavy duty spring)						
	(codes L1B, K1B)	1	6549 A1B				
	(codes L1R, K1R)	1	6549 A1R				
	(codes L1T, K1T)	1	6549 A1T				
	(codes L2T, K2T)	1	6567 A2T				
	(codes L8T, K8T, T8T)	1	6569 A8T				
	R1-H, R2-H						
	(code H1B)	1	6554 A1B	---- ---	---- ---	6555 A1B	
	(code H1Q)	1	6554 A1Q	---- ---	---- ---	6555 A1Q	
	(code H1R)	1	6554 A1R	---- ---	---- ---	6555 A1R	
	(code H1T)	1	6554 A1T	---- ---	---- ---	6555 A1T	
	(code H1Y)	1	6554 A1Y	---- ---	---- ---	6555 A1Y	
	(code H4B)	1	6562 A4B	---- ---	---- ---	6559 A4B	6570 A4B
	(code H4Q)	1	6562 A4Q	---- ---	---- ---	6559 A4Q	6570 A4Q
	(code H4R)						
	UP TO Serial Nos. 57-154604 and 57-146588	1	6562 A4R	---- ---	---- ---	6559 A4R	6570 A4R
	AFTER Serial Nos. 57-154604 and 57-146588	1	6562 A5R	---- ---	---- ---	6559 A5R	6570 A5R
	(code H4X)	1	---- ---	---- ---	---- ---	6559 A4X	6570 A4X
	(code H4Y)	1	6562 A4Y	---- ---	---- ---	6559 A4Y	6570 A4Y

★ Indicates use as required.
⊟ Indicates parts not listed in any previous parts book.
April 1966, Supersedes May 1965.

MyMopar.com

Printed in U.S.A.
Prices and specifications subject to change without notice.
Right and left part numbers are on same line first number is right, second number is left.
* Indicates change or addition.

CODE	REMARKS	PER CAR	SED.	4D H.T	STA. WGN.	2D H.T	CV. CP.
23-109-3	BACK, Rear Seat - Cont'd						
	R1-H, R2-H (2nd. seat)						
	(spring and cover)						
	(code H4B)	1	---- ---	---- ---	6558 A4B		
	(code H4Q)	1	---- ---	---- ---	6558 A4Q		
	(code H4R)						
	UP TO Serial No. 57-132009	1	---- ---	---- ---	6558 A4R		
	AFTER Serial No. 57-132009	1	---- ---	---- ---	6558 A5R		
	(code H4T)	1	---- ---	---- ---	6558 A4T		
	(code H4Y)	1	---- ---	---- ---	6558 A4Y		
	R1-H, R2-H (3rd. seat)						
	(spring and cover)						
	(code H4B)	1	---- ---	---- ---	7018 A4B		
	(code H4Q)	1	---- ---	---- ---	7018 A4Q		
	(code H4R)						
	UP TO Serial No. 57-151401	1	---- ---	---- ---	7018 A4R		
	AFTER Serial No. 57-151401	1	---- ---	---- ---	7018 A5R		
	(code H4T)	1	---- ---	---- ---	7018 A4T		
	(code H4Y)	1	---- ---	---- ---	7018 A4Y		
	Screw w/Washer (attaching)	4	---- ---	---- ---	6025 292		
	R2-P						
	(code P4B)	1	---- ---	---- ---	---- ---	6564 A4B	6565 A4B
	(code P4Q)	1	---- ---	---- ---	---- ---	6564 A4Q	6565 A4Q
	(code P4R)	1	---- ---	---- ---	---- ---	6564 A4R	6565 A4R
	(code P4X)	1	---- ---	---- ---	---- ---	6564 A4X	6565 A4X
	(code P4Y)	1	---- ---	---- ---	---- ---	6564 A4Y	6565 A4Y
	P1-L, P2-L						
	(code L1B)	1	6542 A1B				
	(code L1R)	1	6542 A1R				
	(code L1T)	1	6542 A1T				
	(code L5B)	1	*7755 A5B				
	(code L5R)	1	7755 A5R				
	(code L5T)	1	7755 A5T				
	(code L2T)	1	7451 A2T				
	(code L8T)	1	7414 A8T				
	P1-L, P2-L						
	(w/heavy duty spring)						
	(codes L1B,K1B)	1	6543 A1B				
	(codes L1R,K1R)	1	6543 A1R				
	(codes L1T,K1T)	1	6543 A1T				
	(code L5B)	1	7777 A5B				
	(code L5R)	1	7777 A5R				
	(code L5T)	1	7777 A5T				
	(codes L2T,K2T)	1	7452 A2T				
	(codes L8T,K8T,T8T)	1	7415 A8T				
	P1-L, P2-L (2nd. seat)						
	(spring and cover)						
	(codes L4B,K4B)	1	---- ---	---- ---	6576 A4B		
	(codes L4R,K4R)	1	---- ---	---- ---	6576 A4R		
	(codes L4T,K4T)	1	---- ---	---- ---	6576 A4T		
	P1-M, P2-M						
	(code M1B)	1	*7747 A1B				
	(code M1Q)	1	*7747 A1Q				
	(code M1R)	1	*7747 A1R				
	(code M1T)	1	*7747 A1T				
	(code M5B)	1	7755 A5B				
	(code M5R)	1	7755 A5R				
	(code M5T)	1	7755 A5T				
	(2nd. seat)						
	(spring and cover)						
	(code M4B)	1	---- ---	---- ---	7760 A4B		
	(code M4Q)	1	---- ---	---- ---	7760 A4Q		
	(code M4R)	1	---- ---	---- ---	7760 A4R		
	(code M4T)	1	---- ---	---- ---	7760 A4T		

★ Indicates use as required.
⊟ Indicates parts not listed in any previous parts book.
Right and left part numbers are on same line, first number is right, second number is left.

MyMopar.com

Printed in U.S.A.
Prices and specifications subject to change without notice.
April 1966, Supersedes May 1965.

CODE	REMARKS	PER CAR	SED.	4D H.T	STA. WGN.	2D H.T	CV. CP.
23-109-3	BACK, Rear Seat - Cont'd						
	P1-M, P2-M						
	(3rd. seat)						
	(spring and cover)						
	(code M4B)	1	---- ---	---- ---	7763 A4B		
	(code M4Q)	1	---- ---	---- ---	7763 A4Q		
	(code M4R)	1	---- ---	---- ---	7763 A4R		
	(code M4T)	1	---- ---	---- ---	7763 A4T		
	P1-M, P2-M						
	(2nd. seat)						
	(spring and cover)						
	(code M4B)	1	---- ---	---- ---	7760 A4B		
	(code M4Q)	1	---- ---	---- ---	7760 A4Q		
	(code M4R)	1	---- ---	---- ---	7760 A4R		
	(code M4T)	1	---- ---	---- ---	7760 A4T		
	(3rd. seat)						
	(spring and cover)						
	(code M4B)	1	---- ---	---- ---	7763 A4B		
	(code M4Q)	1	---- ---	---- ---	7763 A4Q		
	(code M4R)	1	---- ---	---- ---	7763 A4R		
	(code M4T)	1	---- ---	---- ---	7763 A4T		
	P1-H, P2-H (3rd. seat)						
	(codes H1B, H4B)	1	6541 A1B	6541 A1B	7028 A4B		
	(codes H1Q, H4Q)	1	6541 A1Q	6541 A1Q	7028 A4Q		
	(codes H1R, H4R)	1	6541 A1R	6541 A1R	7028 A4R		
	(codes H1T, H4T)	1	6541 A1T	6541 A1T	7028 A4T		
	(codes H1Y, H4Y)	1	6541 A1Y	6541 A1Y	7028 A4Y		
	(code H5B)	1	6540 A5B	6540 A5B			
	(code H5Q)	1	6540 A5Q	6540 A5Q			
	(code H5R)	1	6540 A5R	6540 A5R			
	(code H5X)	1	6540 A5X	6540 A5X			
	(code H5Y)	1	6540 A5Y	6540 A5Y			
	P2-H (2nd. seat)						
	(spring and cover)						
	(codes H4B, H5B)	1	---- ---	---- ---	6575 A4B	---- ---	6553 A5B
	(codes H4Q, H5Q)	1	---- ---	---- ---	6575 A4Q	---- ---	6553 A5Q
	(codes H4R, H5R)	1	---- ---	---- ---	6575 A4R	---- ---	6553 A5R
	(code H4T)	1	---- ---	---- ---	6575 A4T		
	(code H4Y, H5Y)	1	---- ---	---- ---	6575 A4Y	---- ---	6553 A5Y
	(code H5X)	1	---- ---	---- ---	---- ---	---- ---	6553 A5X
	P1-H, P2-H						
	(code H2B)	1	---- ---	---- ---	---- ---	6573 A2B	
	(code H2Q)	1	---- ---	---- ---	---- ---	6573 A2Q	
	(code H2R)	1	---- ---	---- ---	---- ---	6573 A2R	
	(code H2T)	1	---- ---	---- ---	---- ---	6573 A2T	
	(code H2Y)	1	---- ---	---- ---	---- ---	6573 A2Y	
	(code H5B	1	---- ---	---- ---	---- ---	6574 A5B	
	(code H5Q)	1	---- ---	---- ---	---- ---	6574 A5Q	
	(code H5R)	1	---- ---	---- ---	---- ---	6574 A5R	
	(code H5X)	1	---- ---	---- ---	---- ---	6574 A5X	
	(code H5Y)	1	---- ---	---- ---	---- ---	6574 A5Y	
	P2-P						
	(code P4B)	1	---- ---	---- ---	---- ---	6524 A4B	6608 A4B
	(code P4Q)	1	---- ---	---- ---	---- ---	6524 A4Q	6608 A4Q
	(code P4R)	1	---- ---	---- ---	---- ---	6524 A4R	6608 A4R
	(code P4U)	1	---- ---	---- ---	---- ---	6524 A4U	6608 A4U
	(code P4X)	1	---- ---	---- ---	---- ---	6524 A4X	6608 A4X
	(code P4Y)	1	---- ---	---- ---	---- ---	6524 A4Y	6608 A4Y
	Screw and Washer						
	(spring attaching)	2	6023 545	6023 545	---- ---	6023 545	6023 545

★ Indicates use as required.
⊟ Indicates parts not listed in any previous parts book.
April 1966, Supersedes May 1965.

Printed in U.S.A.
Prices and specifications subject to change without notice.
Right and left part numbers are on same line, first number is right, second number is left.
* Indicates change or addition.

MyMopar.com

CODE	REMARKS	PER CAR	SED.	4D H.T	STA. WGN.	2D H.T	CV. CP.
23-109-4	COVER, Rear Seat Back (2nd. seat)						
	R1-L, R2-L						
	(codes L1B, K1B, L4B, K4B)	1	6750 A1B	---- ---	6755 A4B		
	(codes L1R, K1R, L4R, K4R)	1	6750 A1R	---- ---	6755 A4R		
	(codes L1T, K1T, L4T, K4T)	1	6750 A1T	---- ---	6755 A4T		
	(codes L2T, K2T)	1	6764 A2T				
	(codes L8T, K8T, T8T)	1	6765 A8T				
	(code L5B)	1	6761 A4B				
	(code L5R)						
	UP TO Serial No. 57-154604	1	6761 A4R				
	AFTER Serial No. 57-154604	1	6761 A5R				
	(code L5T)	1	6761 A4T				
	R1-H, R2-H (2nd. seat)						
	(code H1B)	1	6753 A1B	---- ---	---- ---	6754 A1B	
	(code H1Q)	1	6753 A1Q	---- ---	---- ---	6754 A1Q	
	(code H1R)	1	6753 A1R	---- ---	---- ---	6754 A1R	
	(code H1T)	1	6753 A1T	---- ---	---- ---	6754 A1T	
	(code H1Y)	1	6753 A1Y	---- ---	---- ---	6754 A1Y	
	(code H4B)	1	6761 A4B	---- ---	6757 A4B	6758 A4B	6759 A4B
	(code H4Q)	1	6761 A4Q	---- ---	6757 A4Q	6758 A4Q	6759 A4Q
	(code H4R)						
	UP TO Serial Nos. 57-154604, 57-132009, 57-146588	1	6761 A4R	---- ---	6757 A4R	6758 A4R	6759 A4R
	AFTER Serial Nos. 57-154604, 57-132009, 57-146588	1	6761 A5R	---- ---	6757 A5R	6758 A5R	6759 A5R
	(code H4T)	1	6761 A4T	---- ---	6757 A4T		
	(code H4Y)	1	6761 A4Y	---- ---	6757 A4Y	6758 A4Y	6759 A4Y
	(code H4X)	1	---- ---	---- ---	---- ---	6758 A4X	6759 A4X
	R1-H, R2-H (3rd. seat)						
	(code H4B)	1	---- ---	---- ---	7019 A4B		
	(code H4Q)	1	---- ---	---- ---	7019 A4Q		
	(code H4R)						
	UP TO Serial No. 57-151401	1	---- ---	---- ---	7019 A4R		
	AFTER Serial No. 57-151401	1	---- ---	---- ---	7019 A5R		
	(code H4T)	1	---- ---	---- ---	7019 A4T		
	(code H4Y)	1	---- ---	---- ---	7019 A4Y		
	R2-P						
	(code P4B)	1	---- ---	---- ---	---- ---	6762 A4B	6763 A4B
	(code P4Q)	1	---- ---	---- ---	---- ---	6762 A4Q	6763 A4Q
	(code P4R)	1	---- ---	---- ---	---- ---	6762 A5R	6763 A5R
	(code P4X)	1	---- ---	---- ---	---- ---	6762 A4X	6763 A4X
	(code P4Y)	1	---- ---	---- ---	---- ---	6762 A4Y	6763 A4Y
	P1-L, P2-L (2nd. seat)						
	(codes L1B, K1B, L4B, K4B)	1	6713 A1B	---- ---	6771 A4B		
	(codes L1R, K1R, L4R, K4R)	1	6713 A1R	---- ---	6771 A4R		
	(codes L1T, K1T, L4T, K4T)	1	6713 A1T	---- ---	6771 A4T		
	(codes L2T, K2T)	1	7453 A2T				
	P1-L, P2-L						
	(codes L8T, K8T, T8T)	1	7416 A8T				
	UP TO Serial No. 107818 except, Trim Code L5R						
	UP TO Serial No. 134088						
	(code L5B)	1	6714 A5B				
	(code L5R)	1	6714 A5R				
	(code L5T)	1	6714 A5T				
	AFTER Serial No. 107818 except, Trim Code L5R						
	AFTER Serial No. 134088						
	(code L5B)	1	7756 A5B				
	(code L5R)	1	7756 A5R				
	(code L5T)	1	7756 A5T				

★ Indicates use as required.
⊟ Indicates parts not listed in any previous parts book. Right and left part numbers are on same line, first number is right, second number is left.
* Indicates change or addition.

MyMopar.com

Printed in U.S.A.
Prices and specifications subject to change without notice.
April 1966, Supersedes May 1965.

CODE	REMARKS	PER CAR	SED.	4D H.T	STA. WGN.	2D H.T	CV. CP.
23-109-4	COVER, Rear Seat Back - Cont'd						
	P1-M, P2-M (2nd. seat)						
	UP TO Serial No. 107818 except, Trim Codes M1R, M4R, M5R						
	UP TO Serial No. 134088						
	(codes M1B, M4B)	1	6751 A1B	---- ---	6772 A4B		
	(codes M1Q, M4Q)	1	6751 A1Q	---- ---	*7761 A4Q		
	(codes M1R, M4R)	1	6751 A1R	---- ---	6772 A4R		
	(codes M1T, M4T)	1	6751 A1T	---- ---	6772 A4T		
	(code M5B)	1	6714 A5B				
	(code M5R)	1	6714 A5R				
	(code M5T)	1	6714 A5T				
	(3rd. seat)						
	(code M4B)	1	---- ---	---- ---	7764 A4B		
	(code M4Q)	1	---- ---	---- ---	7040 A4Q		
	(code M4R)	1	---- ---	---- ---	7040 A4R		
	(code M4T)	1	---- ---	---- ---	7040 A4T		
	P1-M, P2-M (2nd. seat)						
	AFTER Serial No. 107818 except, Trim Codes M1R, M4R, M5R						
	AFTER Serial No. 134088						
	(codes M1B, M4B)	1	7748 A1B	---- ---	7761 A4B		
	(codes M1Q, M4Q)	1	7748 A1Q	---- ---	7761 A4Q		
	(codes M1R, M4R)	1	7748 A1R	---- ---	7761 A4R		
	(codes M1T, M4T)	1	7748 A1T	---- ---	7761 A4T		
	(code M5B)	1	7756 A5B				
	(code M5R)	1	7756 A5R				
	(code M5T)	1	7756 A5T				
	(3rd. seat)						
	(code M4B)	1	---- ---	---- ---	7764 A4B		
	(code M4Q)	1	---- ---	---- ---	7764 A4Q		
	(code M4R)	1	---- ---	---- ---	7764 A4R		
	(code M4T)	1	---- ---	---- ---	7764 A4T		
	P1-H, P2-H (2nd. seat)						
	(codes H1B, H2B, H4B)	1	6712 A1B	6712 A1B	6770 A4B	6768 A2B	
	(codes H1Q, H2Q, H4Q)	1	6712 A1Q	6712 A1Q	6770 A4Q	6768 A2Q	
	(codes H1R, H2R, H4R)	1	6712 A1R	6712 A1R	6770 A4R	6768 A2R	
	(codes H1T, H2T, H4T)	1	6712 A1T	6712 A1T	6770 A4T	6768 A2T	
	(codes H1Y, H2Y, H4Y)	1	6712 A1Y	6712 A1Y	6770 A4Y	6768 A2Y	
	(code H5B)	1	6711 A5B	6711 A5B	---- ---	6769 A5B	6774 A5B
	(code H5Q)	1	6711 A5Q	6711 A5Q	---- ---	6769 A5Q	6774 A5Q
	(code H5R)	1	6711 A5R	6711 A5R	---- ---	6769 A5R	6772 A5R
	(code H5X)	1	6711 A5X	6711 A5X	---- ---	6769 A5X	6774 A5X
	(code H5Y)	1	6711 A5Y	6711 A5Y	---- ---	6769 A5Y	6774 A5Y
	P2-H (3rd. seat)						
	(code H4B)	1	---- ---	---- ---	7029 A4B		
	(code H4Q)	1	---- ---	---- ---	7029 A4Q		
	(code H4R)	1	---- ---	---- ---	7029 A4R		
	(code H4T)	1	---- ---	---- ---	7029 A4T		
	(code H4Y)	1	---- ---	---- ---	7029 A4Y		
	P2-P						
	(code P4B)	1	---- ---	---- ---	---- ---	6737 A4B	6721 A4B
	(code P4Q)	1	---- ---	---- ---	---- ---	6737 A4Q	6721 A4Q
	(code P4R)	1	---- ---	---- ---	---- ---	6737 A4R	6721 A4R
	(code P4U)	1	---- ---	---- ---	---- ---	6737 A4U	6721 A4U
	(code P4X)	1	---- ---	---- ---	---- ---	6737 A4X	6721 A4X
	(code P4Y)	1	---- ---	---- ---	---- ---	6737 A4Y	6721 A4Y

★ Indicates use as required.
⊟ Indicates parts not listed in any previous parts book.
April 1966, Supersedes May 1965.

Printed in U.S.A.
Prices and specifications subject to change without notice.
Right and left part numbers are on same line, first number is right, second number is left.
* Indicates change or addition.

MyMopar.com

CODE	REMARKS	PER CAR	SED.	4D H.T	STA. WGN.	2D H.T	CV. CP.
23-109-5	INSERT or COVER, Rear Seat Back Rear Panel						
	R1, R2 (2nd. seat)						
	(codes L4B, K4B, H4B)	1	---- ---	---- ---	1804 AB8		
	(code H4Q)	1	---- ---	---- ---	1804 AQ8		
	(codes L4R, K4R, H4R)	1	---- ---	---- ---	1804 AR7		
	(codes L4T, K4T, H4T)	1	---- ---	---- ---	1804 AT8		
	(code H4Y)	1	---- ---	---- ---	1804 AY8		
	R1-H, R2-H (3rd. seat back panel)						
	(code H4B)	1	---- ---	---- ---	1805 AB8		
	(code H4Q)	1	---- ---	---- ---	1805 AQ8		
	(code H4R)	1	---- ---	---- ---	1805 AR7		
	(code H4T)	1	---- ---	---- ---	1805 AT8		
	(code H4Y)	1	---- ---	---- ---	1805 AY8		
	Screw (attaching)	4	---- ---	---- ---	6024 678		
	P1, P2 (2nd. seat back panel)						
	(codes L4B, K4B, M4B, H4B)	1	---- ---	---- ---	1816 AB8		
	(codes M4Q, H4Q)	1	---- ---	---- ---	1816 AQ8		
	(codes L4R, K4R, M4R, H4R)	1	---- ---	---- ---	1816 AR7		
	(codes L4T, K4T, M4T, H4T)	1	---- ---	---- ---	1816 AT8		
	(code H4Y)	1	---- ---	---- ---	1816 AY8		
	(2nd. seat back support panel insert) (5" wide)						
	(codes L4B, K4B, M4B, H4B)	1	---- ---	---- ---	1825 AB8		
	(codes M4Q, H4Q)	1	---- ---	---- ---	1825 AQ8		
	(codes L4R, K4R, M4R, H4R)	1	---- ---	---- ---	1825 AR7		
	(codes L4T, K4T, M4T, H4T)	1	---- ---	---- ---	1825 AT8		
	(code H4Y)	1	---- ---	---- ---	1825 AY8		
	(2nd. seat back support panel insert) (12 3/8" wide)						
	(codes L4B, K4B, M4B, H4B)	1	---- ---	---- ---	1821 AB8		
	(codes L4Q, H4Q)	1	---- ---	---- ---	1821 AQ8		
	(codes L4R, K4R, M4R, H4R)	1	---- ---	---- ---	1821 AR7		
	(codes L4T, K4T, M4T, H4T)	1	---- ---	---- ---	1821 AT8		
	(code H4Y)	1	---- ---	---- ---	1821 AY8		
	(3rd. seat back panel)						
	(codes M4B, H4B)	1	---- ---	---- ---	1815 AB8		
	(codes M4Q, H4Q)	1	---- ---	---- ---	1815 AQ8		
	(codes M4R, H4R)	1	---- ---	---- ---	1815 AR7		
	(codes M4T, H4T)	1	---- ---	---- ---	1815 AT8		
	(code H4Y)	1	---- ---	---- ---	1815 AY8		
	(3rd. seat back support panel insert)						
	(codes M4B, H4B)	1	---- ---	---- ---	1822 AB8		
	(codes M4Q, H4Q)	1	---- ---	---- ---	1822 AQ8		
	(codes M4R, H4R)	1	---- ---	---- ---	1822 AR7		
	(codes M4T, H4T)	1	---- ---	---- ---	1822 AT8		
	(code H4Y)	1	---- ---	---- ---	1822 AY8		
	Screw (attaching)	4	---- ---	---- ---	6024 678		
	R1-H, R2-H (3rd. seat back support panel)						
	(code H4B)	1	---- ---	---- ---	1806 AB8		
	(code H4Q)	1	---- ---	---- ---	1806 AQ8		
	(code H4R)	1	---- ---	---- ---	1806 AR7		
	(code H4T)	1	---- ---	---- ---	1806 AT8		
	(code H4Y)	1	---- ---	---- ---	1806 AY8		

★ Indicates use as required.
B Indicates parts not listed in any previous parts book.
Right and left part numbers are on same line, first number is right, second number is left.
* Indicates change or addition.

MyMopar.com

Printed in U.S.A.
Prices and specifications subject to change without notice.
April 1966, Supersedes May 1965.

CODE	REMARKS	PER CAR	SED.	4D H.T	STA. WGN.	2D H.T.	CV. CP.
23-109-6	FOUNDATION, Back of Rear Back Upper (paint as required)						
	R1, R2	1	---- ---	---- ---	---- ---	---- ---	4364 AX9
	(paint as required)						
	P2 (back of rear seat back)	1	---- ---	---- ---	---- ---	---- ---	4472 AX9
	(less radio speaker)	1	---- ---	---- ---	---- ---	---- ---	4473 AX9
23-109-10	FILLER and BRACKET, Rear Seat Back Cushion (paint as required)						
	P2-P	1	---- ---	---- ---	---- ---	4462-3 AX9	
	Screw (attaching)	6	---- ---	---- ---	---- ---	6023 776	
23-109-11	SHROUD, Rear Seat (paint as required)						
	P2-P	1	---- ---	---- ---	---- ---	4491 AX9	
	Fastener (bracket to body)	4	---- ---	---- ---	---- ---	6000 365	
23-109-12	EXTENSION, Rear Seat Shroud Side Filler						
	P2-P (paint as required)	1	---- ---	---- ---	---- ---	4484-5 AX9	
	Screw and Washer	3	---- ---	---- ---	---- ---	6025 583	
	Screw (filler Bracket to floor)	6	---- ---	---- ---	---- ---	6023 776	
23-109-35	CUSHION, Rear Seat						
	R1, R2						
	(code L1B)	1	6251 A1B				
	(code L1R)	1	6251 A1R				
	(code L1T)	1	6251 A1T				
	(code L2T)	1	6280 A2T				
	(code L8T)	1	6284 A8T				
	R1, R2 (2nd. seat)						
	(codes L1B, L4B)	1	6251 A1B	---- ---	6265 A4B		
	(codes L1R, L4R)	1	6251 A1R	---- ---	6265 A4R		
	(codes L1T, L4T)	1	6251 A1T	---- ---	6265 A4T		
	R1, R2						
	(code H1B)	1	6261 A1B	---- ---	---- ---	6263 A1B	
	(code H1Q)	1	6261 A1Q	---- ---	---- ---	6263 A1Q	
	(code H1R)	1	6261 A1R	---- ---	---- ---	6263 A1R	
	(code H1T)	1	6261 A1T	---- ---	---- ---	6263 A1T	
	(code H1Y)	1	6261 A1Y	---- ---	---- ---	6263 A1Y	
	R1, R2 (2nd. seat)						
	(codes L4B, L5B, H4B)	1	6274 A4B	---- ---	6268 A4B	6269 A4B	6271 A4B
	(code H4Q)	1	6274 A4Q	---- ---	6268 A4Q	6269 A4Q	6271 A4Q
	(code L4R)	1	---- ---	---- ---	6268 A5R		
	(codes L5R, H4R)						
	UP TO Serial Nos. 57-154604, 57-132009, 57-146588	1	6274 A4R	---- ---	6268 A4R	6269 A4R	6271 A4R
	AFTER Serial Nos. 57-154604, 57-132009, 57-146588	1	6274 A4R	---- ---	6268 A5R	6269 A5R	6271 A5R
	(codes L4T, L5T, H4T)	1	6274 A4T	---- ---	6268 A4T		
	(code H4Y)	1	6274 A4Y	---- ---	6268 A4Y	6269 A4Y	6271 A4Y
	(code H4X)	1	---- ---	---- ---	---- ---	6269 A4X	6271 A4X
	R1-H, R2-H (3rd. seat)						
	(code H4B)	1	---- ---	---- ---	7016 A4B		
	(code H4Q)	1	---- ---	---- ---	7016 A4Q		
	(code H4R)	1	---- ---	---- ---	7016 A4R		
	(code H4T)	1	---- ---	---- ---	7016 A4T		
	(code H4Y)	1	---- ---	---- ---	7016 A4Y		

★ Indicates use as required.
⊟ Indicates parts not listed in any previous parts book.
April 1966, Supersedes May 1965.

Printed in U.S.A.
Prices and specifications subject to change without notice.
Right and left part numbers are on same line, first number is right, second number is left.
• Indicates change or addition.

MyMopar.com

CODE	REMARKS	PER CAR	SED.	4D H.T	STA. WGN.	2D H.T	CV. CP.
23-109-35	CUSHION, Rear Seat - Cont'd						
	R2-P						
	(code P4B)	1	---- ---	---- ---	---- ---	6278 A4B	6279 A4B
	(code P4Q)	1	---- ---	---- ---	---- ---	6278 A4Q	6279 A4Q
	(code P4R)						
	UP TO Serial No. 57-151401	1	---- ---	---- ---	---- ---	6278 A4R	6279 A4R
	AFTER Serial No. 57-151401	1	---- ---	---- ---	---- ---	6278 A5R	6279 A5R
	(code P4X)	1	---- ---	---- ---	---- ---	6278 A4X	6279 A4X
	(code P4Y)	1	---- ---	---- ---	---- ---	6278 A4Y	6279 A4Y
	R1, R2 (w/heavy duty spring)						
	(codes L1B, K1B)	1	6253 A1B				
	(codes L1R, K1R)	1	6253 A1R				
	(codes L1T, K1T)	1	6253 A1T				
	(codes L2T, K2T)	1	6282 A2T				
	(codes L8T, K8T, T8T)	1	6286 A8T				
	P1, P2 (2nd. seat)						
	(codes L1B, K1B, L4B, K4B)	1	6219 A1B	---- ---	6337 A4B		
	(codes L1R, K1R, L4R, K4R)	1	6219 A1R	---- ---	6337 A4R		
	(codes L1T, K1T, L4T, K4T)	1	6219 A1T	---- ---	6337 A4T		
	P1, P2						
	(codes L5B, M5B)	1	6390 A5B				
	(codes L5R, M5R)	1	6390 A5R				
	(codes L5T, M5T)	1	6390 A5T				
	P1, P2 (2nd. seat) (4 D.)						
	(codes M1B, M4B)	1	6256 A1B	---- ---	6273 A4B		
	(codes M1Q, M4Q)	1	6256 A1Q	---- ---	6273 A4Q		
	(codes M1R, M4R)	1	6256 A1R	---- ---	6273 A4R		
	(codes M1T, M4T)	1	6256 A1T	---- ---	6273 A4T		
	(2 D)						
	(code M1B)	1	*7421 A1B				
	(code M1Q)	1	*7421 A1Q				
	(code M1R)	1	*7421 A1R				
	(code M1T)	1	*7421 A1T				
	P1, P2 (3rd. seat)						
	(code M4B)	1	---- ---	---- ---	7030 A4B		
	(code M4Q)	1	---- ---	---- ---	7030 A4Q		
	(code M4R)	1	---- ---	---- ---	7030 A4R		
	(code M4T)	1	---- ---	---- ---	7030 A4T		
	P1, P2 (2nd. seat)						
	(codes H1B, H4B)	1	6222 A1B	6222 A1B	6339 A4B		
	(codes H1Q, H4Q)	1	6222 A1Q	6222 A1Q	6339 A4Q		
	(codes H1R, H4R)	1	6222 A1R	6222 A1R	6339 A4R		
	(codes H1T, H4T)	1	6222 A1T	6222 A1T	6339 A4T		
	(codes H1Y, H4Y)	1	6222 A1Y	6222 A1Y	6339 A4Y		
	P2-H (3rd. seat)						
	(code H4B)	1	---- ---	---- ---	7026 A4B		
	(code H4Q)	1	---- ---	---- ---	7026 A4Q		
	(code H4R)	1	---- ---	---- ---	7026 A4R		
	(code H4T)	1	---- ---	---- ---	7026 A4T		
	(code H4Y)	1	---- ---	---- ---	7026 A4Y		
	P1, P2						
	(code H5B)	1	6241 A5B	6241 A5B	---- ---	6343 A5B	6259 A5B
	(code H5Q)	1	6241 A5Q	6241 A5Q	---- ---	6343 A5Q	6259 A5Q
	(code H5R)	1	6241 A5R	6241 A5R	---- ---	6343 A5R	6259 A5R
	(code H5X)	1	6241 A5X	6241 A5X	---- ---	6343 A5X	6259 A5X
	(code H5Y)	1	6241 A5Y	6241 A5Y	---- ---	6343 A5Y	6259 A5Y
	(code H2B)	1	---- ---	---- ---	---- ---	6345 A2B	
	(code H2Q)	1	---- ---	---- ---	---- ---	6345 A2Q	

★ Indicates use as required.
⊟ Indicates parts not listed in any previous parts book.
Right and left part numbers are on same line, first number is right, second number is left.
* Indicates change or addition.

MyMopar.com

CODE	REMARKS	PER CAR	SED.	4D H.T	STA. WGN.	2D H.T	CV. CP.
23-109-35	CUSHION, Rear Seat - Cont'd						
	P-1, P-2						
	(code H2R)	1	---- ---	---- ---	---- ---	6345 A2R	
	(code H2T)	1	---- ---	---- ---	---- ---	6345 A2T	
	(code H2Y)	1	---- ---	---- ---	---- ---	6345 A2Y	
	P2-P						
	(code P4B)	1	---- ---	---- ---	---- ---	6260 A4B	6326 A4B
	(code P4Q)	1	---- ---	---- ---	---- ---	6260 A4Q	6326 A4Q
	(code P4R)	1	---- ---	---- ---	---- ---	6260 A4R	6326 A4R
	(code P4U)	1	---- ---	---- ---	---- ---	6260 A4U	6326 A4U
	(code P4X)	1	---- ---	---- ---	---- ---	6260 A4X	6326 A4X
	(code P4Y)	1	---- ---	---- ---	---- ---	6260 A4Y	6326 A4Y
	P1, P2 (w/heavy duty spring)						
	(codes L1B,K1B)	1	6220 A1B				
	(codes L1R,K1R)	1	6220 A1R				
	(codes L1T,K1T)	1	6220 A1T				
	(code L5B)	1	6392 A5B				
	(code L5R)	1	6392 A5R				
	(code L5T)	1	6392 A5T				
23-109-36	COVER, Rear Cushion						
	R1-L, R2-L (2nd. seat)						
	(codes L1B,K1B,L4B,K4B)	1	6422 A1B	---- ---	6426 A4B		
	(codes L1R,K1R,L4R,K4R)	1	6422 A1R	---- ---	6426 A4R		
	(codes L1T,K1T,L4T,K4T)	1	6422 A1T	---- ---	6426 A4T		
	(codes L2T,K2T)	1	6436 A2T				
	(codes L8T,K8T,T8T)	1	6437 A8T				
	(code L5B)	1	6433 A4B				
	(code L5R)						
	UP TO Serial No. 57-154604	1	6433 A4R				
	AFTER Serial No. 57-154604	1	6433 A5R				
	(code L5T)	1	6433 A4T				
	R1-H, R2-H						
	(code H1B)	1	6425 A1B	---- ---	---- ---	6428 A1B	
	(code H1Q)	1	6425 A1Q	---- ---	---- ---	6428 A1Q	
	(code H1R)	1	6425 A1R	---- ---	---- ---	6428 A1R	
	(code H1T)	1	6425 A1T	---- ---	---- ---	6428 A1T	
	(code H1Y)	1	6425 A1Y	---- ---	---- ---	6428 A1Y	
	R1-H, R2-H (2nd. seat)						
	(code H4B)	1	6433 A4B	---- ---	6429 A4B	6430 A4B	6431 A4B
	(code H4Q)	1	6433 A4Q	---- ---	6429 A4Q	6430 A4Q	6431 A4Q
	(code H4R)						
	UP TO Serial Nos. 57-154604, 57-132009, 57-146588	1	6433 A4R	---- ---	6429 A4R	6430 A4R	6431 A4R
	AFTER Serial Nos. 57-154604, 57-132009, 57-146588	1	6433 A5R	---- ---	6429 A5R	6430 A5R	6431 A5R
	(code H4T)	1	6433 A4T	---- ---	6429 A4T		
	(code H4Y)	1	6433 A4Y	---- ---	6429 A4Y	6430 A4Y	6431 A4Y
	(code H4X)	1	---- ---	---- ---	---- ---	6430 A4X	6431 A4X
	R1-H, R2-H (3rd. seat)						
	(code H4B)	1	---- ---	---- ---	7017 A4B		
	(code H4Q)	1	---- ---	---- ---	7017 A4Q		
	(code H4R)						
	UP TO Serial No. 57-151401	1	---- ---	---- ---	7017 A4R		
	AFTER Serial No. 57-151401	1	---- ---	---- ---	7017 A5R		
	(code H4T)	1	---- ---	---- ---	7017 A4T		
	(code H4Y)	1	---- ---	---- ---	7017 A4Y		

★ Indicates use as required.
⊟ Indicates parts not listed in any previous parts book.
April 1966, Supersedes May 1965.

Printed in U.S.A.
Prices and specifications subject to change without notice.
Right and left part numbers are on same line, first number is right, second number is left.
* Indicates change or addition.

MyMopar.com

CODE	REMARKS	PER CAR	SED.	4D H.T	STA. WGN.	2D H.T	CV. CP.
23-109-36	COVER, Rear Cushion - Cont'd						
	R2-P						
	(code P4B)	1	---- ---	---- ---	---- ---	6434 A4B	6435 A4B
	(code P4Q)	1	---- ---	---- ---	---- ---	6434 A4Q	6435 A4Q
	(code P4R)	1	---- ---	---- ---	---- ---	6434 A5R	6435 A5R
	(code P4X)	1	---- ---	---- ---	---- ---	6434 A4X	6435 A4X
	(code P4Y)	1	---- ---	---- ---	---- ---	6434 A4Y	6435 A4Y
	P1-L, P2-L (2 D.)						
	(codes L1B, K1B)	1	7400 A1B				
	(codes L1R, K1R)	1	7400 A1R				
	(codes L1T, K1T)	1	7400 A1T				
	(codes L2T, K2T)	1	7450 A2T				
	(codes L8T, K8T)	1	7405 A8T				
	P1-L, P2-L (4 D.)						
	(code L5B)	1	6421 A5B				
	(code L5R)	1	6421 A5R				
	(code L5T)	1	6421 A5T				
	(codes L1B, K1B)	1	6409 A1B				
	(codes L1R, K1R)	1	6409 A1R				
	(codes L1T, K1T)	1	6409 A1T				
	(codes L8T, K8T, T8T)	1	7408 A8T				
	(codes L2T, K2T)	1	7441 A2T				
	P1-L, P2-L (2nd. seat)						
	(codes L4B, K4B)	1	---- ---	---- ---	7032 A4B		
	(codes L4R, K4R)	1	---- ---	---- ---	7032 A4R		
	(codes L4T, K4T)	1	---- ---	---- ---	7032 A4T		
	P1-M, P2-M (2 D.)						
	(code M1B)	1	7420 A1B				
	(code M1Q)	1	7420 A1Q				
	(code M1R)	1	7420 A1R				
	(code M1T)	1	7420 A1T				
	P1-M, P2-M (4 D.) (2nd. seat)						
	(codes M1B, M4B)	1	6423 A1B	---- ---	6432 A4B		
	(codes M1Q, M4Q)	1	6423 A1Q	---- ---	6432 A4Q		
	(codes M1R, M4R)	1	6423 A1R	---- ---	6432 A4R		
	(codes M1T, M4T)	1	6423 A1T	---- ---	6432 A4T		
	P1-M, P2-M (3rd. seat)						
	(code M4B)	1	---- ---	---- ---	7031 A4B		
	(code M4Q)	1	---- ---	---- ---	7031 A4Q		
	(code M4R)	1	---- ---	---- ---	7031 A4R		
	(code M4T)	1	---- ---	---- ---	7031 A4T		
	P1-M, P2-M						
	(code M5B)	1	6421 A5B				
	(code M5R)	1	6421 A5R				
	(code M5T)	1	6421 A5T				
	P1-H, P2-H (2nd. seat)						
	(codes H1B, H4B, H2B)	1	6411 A1B	6411 A1B	7034 A4B	6499 A2B	
	(codes H1Q, H4Q, H2Q)	1	6411 A1Q	6411 A1Q	7034 A4Q	6499 A2Q	
	(codes H1R, H4R, H2R)	1	6411 A1R	6411 A1R	7034 A4R	6499 A2R	
	(codes H1T, H4T, H2T)	1	6411 A1T	6411 A1T	7034 A4T	6499 A2T	
	(codes H1Y, H4Y, H2Y)	1	6411 A1Y	6411 A1Y	7034 A4Y	6499 A2Y	
	P1-H, P2-H (3rd. seat)						
	(code H4B)	1	---- ---	---- ---	7027 A4B		
	(code H4Q)	1	---- ---	---- ---	7027 A4Q		
	(code H4R)	1	---- ---	---- ---	7027 A4R		
	(code H4T)	1	---- ---	---- ---	7027 A4T		
	(code H4Y)	1	---- ---	---- ---	7027 A4Y		

★ Indicates use as required.
⊟ Indicates parts not listed in any previous parts book.
Right and left part numbers are on same line, first number is right, second number is left.
• Indicates change or addition.

MyMopar.com

CODE	REMARKS	PER CAR	SED.	4D H.T	STA. WGN.	2D H.T	CV. CP.
23-109-36	COVER, Rear Cushion - Cont'd						
	P1-H, P2-H						
	(code H5B)	1	6410 A5B	6410 A5B	---- ---	6498 A5B	6424 A5B
	(code H5Q)	1	6410 A5Q	6410 A5Q	---- ---	6498 A5Q	6424 A5Q
	(code H5R)	1	6410 A5R	6410 A5R	---- ---	6498 A5R	6424 A5R
	(code H5X)	1	6410 A5X	6410 A5X	---- ---	6498 A5X	6424 A5X
	(code H5Y)	1	6410 A5Y	6410 A5Y	---- ---	6498 A5Y	6424 A5Y
	P2-P						
	(code P4B)	1	---- ---	---- ---	---- ---	6438 A4B	6457 A4B
	(code P4Q)	1	---- ---	---- ---	---- ---	6438 A4Q	6457 A4Q
	(code P4R)	1	---- ---	---- ---	---- ---	6438 A4R	6457 A4R
	(code P4X)	1	---- ---	---- ---	---- ---	6438 A4X	6457 A4X
	(code P4Y)	1	---- ---	---- ---	---- ---	6438 A4Y	6457 A4Y
	(code P4U)	1	---- ---	---- ---	---- ---	6438 A4U	6457 A4U
23-109-38	RETAINER, Rear Floor Pan Third Seat Cushion						
	R1-H, R2-H, P2						
	Front	2	---- ---	---- ---	2577 071		
	Rear	2	---- ---	---- ---	2482 956		
23-109-47	BAFFLE, Rear Seat Cushion Spring Bottom						
	P2-P	2	---- ---	---- ---	---- ---	*2577 426	
23-111-37	STRIP, Folding Top Tacking						
	R1, R2						
	(Nos. 1 and 2)	4	---- ---	---- ---	---- ---	---- ---	2424 591
	(Rear Bow Center)	1	---- ---	---- ---	---- ---	---- ---	2424 607
	(Rear Bow End)	2	---- ---	---- ---	---- ---	---- ---	2481 374
	P1, P2						
	(Nos. 1 and 2)	2	---- ---	---- ---	---- ---	---- ---	2528 254
	(No. 3)	1	---- ---	---- ---	---- ---	---- ---	2603 557
	(Rear Bow)	1	---- ---	---- ---	---- ---	---- ---	2424 607
	(Center)	1	---- ---	---- ---	---- ---	---- ---	2528 264
23-112-12	BOOT, Folding Top Dust						
	R1, R2						
	(codes H4B, P4B)	1	---- ---	---- ---	---- ---	---- ---	1915 AB4
	(codes H4Q, P4Q)	1	---- ---	---- ---	---- ---	---- ---	1915 AQ4
	(codes H4Y, P4Y)	1	---- ---	---- ---	---- ---	---- ---	1915 AY3
	(code H4R)	1	---- ----	---- ---	---- ---	---- ---	*1915 VR6
	Socket (to belt moulding)	8	---- ---	---- ---	---- ---	---- ---	141 998
	Cap Fastener	8	---- ---	---- ---	---- ---	---- ---	6000 434
	(code P4R)	1	---- ---	---- ---	---- ---	---- ---	*1915 AR6
	(codes H4T, P4T)	1	---- ---	---- ---	---- ---	---- ---	1915 VT6
	(code P4X)	1	---- ---	---- ---	---- ---	---- ---	1915 VX9
	Stud Fastener (to quarter panel)	4	---- ---	---- ---	---- ---	---- ---	6000 432
	Eyelet	2	---- ---	---- ---	---- ---	---- ---	141 991
	P2-H, P2-P						
	(code H5B)	1	---- ---	---- ---	---- ---	---- ---	1939 AB4
	(code P4B)	1	---- ---	---- ---	---- ---	---- ---	1939 AB8
	(code H5Q)	1	---- ---	---- ---	---- ---	---- ---	1939 AQ4
	(code P4Q)	1	---- ---	---- ---	---- ---	---- ---	1939 AQ8
	(codes H5R, P4R)	1	---- ---	---- ---	---- ---	---- ---	1939 AR7
	(codes H5X, P4X, P4U)	1	---- ---	---- ---	---- ---	---- ---	1939 AX9
	(codes H5Y, P4Y)	1	---- ---	---- ---	---- ---	---- ---	1939 AY3
	Fastener (to pocket panel)	4	---- ---	---- ---	---- ---	---- ---	6000 432
23-112-18	RETAINER, Rear Seat Back Dust Boot						
	R1, R2	1	---- ---	---- ---	---- ---	---- ---	2577 276
	P2	1	---- ---	---- ---	---- ---	---- ---	2577 277

★ Indicates use as required.
⊟ Indicates parts not listed in any previous parts book.
April 1966, Supersedes May 1965.

Printed in U.S.A.
Prices and specifications subject to change without notice.
Right and left part numbers are on same line, first number is right, second number is left.
* Indicates change or addition.

MyMopar.com

CODE	REMARKS	PER CAR	SED.	4D H.T	STA. WGN.	2D H.T	CV. CP.
23-112-21	EYELET, Folding Top Dust Boot to Belt Moulding						
	R1, R2, P1, P2	23	---- ---	---- ---	---- ---	---- ---	2581 193
	Fastener and Plate	23	---- ---	---- ---	---- ---	---- ---	2572 131
23-112-45	CURTAIN, Folding Top Rear						
	R1, R2						
	(blue)	1	---- ---	---- ---	---- ---	---- ---	1925 AB1
	(white)	1	---- ---	---- ---	---- ---	---- ---	1925 VW1
	(black)	1	---- ---	---- ---	---- ---	---- ---	1925 TX9
	P2						
	(blue)	1	---- ---	---- ---	---- ---	---- ---	1910 AB1
	(white)	1	---- ---	---- ---	---- ---	---- ---	1910 AW1
	(black)	1	---- ---	---- ---	---- ---	---- ---	1910 AX9
	(backlite)						
	R1, R2						
	(blue)	1	---- ---	---- ---	---- ---	---- ---	1926 AB1
	(white)	1	---- ---	---- ---	---- ---	---- ---	1926 VW1
	(black)	1	---- ---	---- ---	---- ---	---- ---	1926 TX9
	P1, P2						
	(blue)	1	---- ---	---- ---	---- ---	---- ---	1911 AB1
	(white)	1	---- ---	---- ---	---- ---	---- ---	1911 AW1
	(black)	1	---- ---	---- ---	---- ---	---- ---	1911 AX9
23-112-46	ZIPPER, Folding Top Rear Curtain Full						
	R1, R2 (white)	1	---- ---	---- ---	---- ---	---- ---	*1923 VW2
	(black)	1	---- ---	---- ---	---- ---	---- ---	1923 TX8
	P2						
	(white)	1	---- ---	---- ---	---- ---	---- ---	1913 AW2
	(black)	1	---- ---	---- ---	---- ---	---- ---	1913 AX8
23-112-50	TAPE, Folding Top Side Cover to Rear Curtain						
	R1, R2, P2						
	(black)	1	---- ---	---- ---	---- ---	---- ---	1933 TX8
	(white)	1	---- ---	---- ---	---- ---	---- ---	1933 VW2
	(rear curtain to top closure)						
	(black)	1	---- ---	---- ---	---- ---	---- ---	1934 TX8
	(white)	1	---- ---	---- ---	---- ---	---- ---	1934 VW2
23-112-70	RETAINER, Folding Top to Belt Bar						
	R2						
	Side	1	---- ---	---- ---	---- ---	---- ---	*2421 944-5
	(quarter belt bar trim)	2	---- ---	---- ---	---- ---	---- ---	2252 610
	Screw	2	---- ---	---- ---	---- ---	---- ---	6023 381
	Side	1	---- ---	---- ---	---- ---	---- ---	2482 436-7
	Center	1	---- ---	---- ---	---- ---	---- ---	2482 438
	Corner	1	---- ---	---- ---	---- ---	---- ---	2526 966-7
23-112-75	TIP, 5/8″ Wire-on Binding End						
	R1, R2, P1, P2	1	---- ---	---- ---	---- ---	---- ---	1158 976-7
	Screw (attaching)	2	---- ---	---- ---	---- ---	---- ---	6024 438
23-112-88	CABLE, Folding Top to Rear Bow Tension						
	R1, R2						
	(black)	2	---- ---	---- ---	---- ---	---- ---	1970 VX8
	(white)	2	---- ---	---- ---	---- ---	---- ---	1970 VW2
	P2						
	(black)	2	---- ---	---- ---	---- ---	---- ---	1979 AX8
	Clip (adj. nut)	2	---- ---	---- ---	---- ---	---- ---	6025 729
	Nut (adjusting)	2	---- ---	---- ---	---- ---	---- ---	6025 727

★ Indicates use as required.
⊟ Indicates parts not listed in any previous parts book.
Right and left part numbers are on same line, first number is right, second number is left.
* Indicates change or addition.

Printed in U.S.A.
Prices and specifications subject to change without notice.
April 1966, Supersedes May 1965.

MyMopar.com

CODE	REMARKS	PER CAR	SED.	4D H.T	STA. WGN.	2D H.T	CV. CP.
23-112-88	CABLE, Folding Top to Rear Bow Tension - Cont'd (side cover)						
	R1, R2	2	---- ---	---- ---	---- ---	---- ---	2525 852
	P1, P2 (w/bracket)	1	---- ---	---- ---	---- ---	---- ---	2589 026-7
	Bolt (attaching)	2	---- ---	---- ---	---- ---	---- ---	6022 169
	Nut	2	---- ---	---- ---	---- ---	---- ---	6025 727
23-112-108	DECK and SIDE QUARTER, Folding Top						
	R1-H, R2-H, R2-P						
	(blue)	1	---- ---	---- ---	---- ---	---- ---	1937 AB1
	(white)	1	---- ---	---- ---	---- ---	---- ---	1937 VW1
	(black)	1	---- ---	---- ---	---- ---	---- ---	1937 VX9
	P2-H, P2-P						
	(blue)	1	---- ---	---- ---	---- ---	---- ---	1905 AB1
	(white)	1	---- ---	---- ---	---- ---	---- ---	1905 AW1
	(black)	1	---- ---	---- ---	---- ---	---- ---	1905 AX9
23-112-112	PAD, Folding Top Side Quarter Stay						
	R1, R2						
	(white)	1	---- ---	---- ---	---- ---	---- ---	1952-3 VW1
	(black)	1	---- ---	---- ---	---- ---	---- ---	1952-3 VX9
	P2-H, P2-P						
	(white)	1	---- ---	---- ---	---- ---	---- ---	1906-7 AW1
	(black)	1	---- ---	---- ---	---- ---	---- ---	1906-7 AX9
	Screw (to header)	7	---- ---	---- ---	---- ---	---- ---	6023 247
23-112-153	COVER or PANEL, Folding Top Pocket Panel						
	R1, R2 (well cover)						
	(codes H4B, P4B)	1	---- ---	---- ---	---- ---	---- ---	1942 AB4
	(codes H4Q, P4Q)	1	---- ---	---- ---	---- ---	---- ---	1942 AQ4
	(codes H4Y, P4Y)	1	---- ---	---- ---	---- ---	---- ---	1942 AY3
	Screw	2	---- ---	---- ---	---- ---	---- ---	6023 381
	Cap Fastener	2	---- ---	---- ---	---- ---	---- ---	6000 434
	P2 (well cover)						
	(code H5B)	1	---- ---	---- ---	---- ---	---- ---	1944 AB4
	(code P4B)	1	---- ---	---- ---	---- ---	---- ---	1944 AB8
	(code H5Q	1	---- ---	---- ---	---- ---	---- ---	1944 AQ4
	(code P4Q)	1	---- ---	---- ---	---- ---	---- ---	1944 AQ8
	(codes H4R, P4R)	1	---- ---	---- ---	---- ---	---- ---	1944 AR7
	(codes H5X, P4X, P4U)	1	---- ---	---- ---	---- ---	---- ---	1944 AX9
	(codes H5Y, P4Y)	1	---- ---	---- ---	---- ---	---- ---	1944 AY3
	Cap Fastener	2	---- ---	---- ---	---- ---	---- ---	6000 434
	(pocket panel) (paint as required)						
	R1-H, R2-H, R2-P	1	---- ---	---- ---	---- ---	---- ---	2084-5 AT6
	P2-H, P2-P	1	---- ---	---- ---	---- ---	---- ---	2000-1 AT8
23-112-160	PAD, Folding Top Pocket Panel Arm Rest						
	R1-H, R2-H						
	(code H4B)	1	---- ---	---- ---	---- ---	---- ---	1202-3 AB4
	(code H4Q)	1	---- ---	---- ---	---- ---	---- ---	1202-3 AQ4
	(code H4R)	1	---- ---	---- ---	---- ---	---- ---	1202-3 VR6
	(code H4Y)	1	---- ---	---- ---	---- ---	---- ---	1202 AY3
	(codes H4X, P4X)	1	---- ---	---- ---	---- ---	---- ---	1202-3 VX9
	R2-P						
	(code P4B)	1	---- ---	---- ---	---- ---	---- ---	1202-3 AB4
	(code P4Q)	1	---- ---	---- ---	---- ---	---- ---	1202-3 AQ4
	(code P4R)	1	---- ---	---- ---	---- ---	---- ---	1202-3 AR5
	(code P4Y)	1	---- ---	---- ---	---- ---	---- ---	1202-3 AY3

★ Indicates use as required.
⊟ Indicates parts not listed in any previous parts book.
April 1966, Supersedes May 1965.

Printed in U.S.A.
Prices and specifications subject to change without notice.
Right and left part numbers are on same line first number is right, second number is left.
* Indicates change or addition.

MyMopar.com

CODE	REMARKS	PER CAR	SED.	4D H.T	STA. WGN.	2D H.T	CV. CP.
23-112-60	PAD, Folding Top Pocket Panel Arm Rest - Cont'd						
	P2-H						
	(code H5B)	1	---- ---	---- ---	---- ---	---- ---	1244-5 AB4
	(code H5Q)	1	---- ---	---- ---	---- ---	---- ---	1244-5 AQ8
	(code H5R)	1	---- ---	---- ---	---- ---	---- ---	1244-5 AR7
	(code H5X)	1	---- ---	---- ---	---- ---	---- ---	1244-5 AX9
	(code H5Y)	1	---- ---	---- ---	---- ---	---- ---	1244-5 AY3
	P2-P						
	(code P4B)	1	---- ---	---- ---	---- ---	---- ---	1244-5 AB8
	(code P4Q)	1	---- ---	---- ---	---- ---	---- ---	1244-5 AQ8
	(code P4R)	1	---- ---	---- ---	---- ---	---- ---	1244-5 AR7
	(codes P4U, P4X)	1	---- ---	---- ---	---- ---	---- ---	1244-5 AX9
	(code P4Y)	1	---- ---	---- ---	---- ---	---- ---	1244-5 AY3
23-113-2	WEATHERCORD, Door and Quarter Window						
	P1, P2 (sold by the inch)						
	(codes L1B, L5B, K1B, K4B, M1B, M4B, M5B, H1B, H4B, H5B, P4B)	★	1536 AB4	1536 AB4	1536 AB4	1536 AB4	1536 AB4
	(codes M1Q, H1Q, H4Q, H5Q, P4Q)	★	1536 AQ4	1536 AQ4	1536 AQ4	1536 AQ4	1536 AQ4
	(codes L1R, L5R, K1R, K4R, M1R, M4R, M5R, H1R, H4R, H5R, P4R)	★	1536 AR5	1536 AR5	1536 AR5	1536 AR5	1536 AR5
	(codes L1T, L2T, K1T, K2T, L8T, K8T, T8T, L5T, M1T, M5T, H1T, H4T)	★	1536 AT6	1536 AT6	1536 AT6	1536 AT6	1536 AT6
	(codes H5X, P4X, P4U)	★	1536 AX8	1536 AX8	1536 AX8	1536 AX8	1536 AX8
	(codes H1Y, H4Y, H5Y)	★	1536 AY3	1536 AY3	1536 AY3	1536 AY3	1536 AY3
23-113-31	RETAINER, Weathercord						
	P1, P2						
	(door)	★	2572 133	2572 133	2572 133	2572 133	2572 133
	(center pillar-upper)	★	---- ---	---- ---	2581 726-7		
23-113-45	WEATHERCORD, Quarter Window Opening						
	R1, R2 (2 D.)						
	(codes L1B, K1B)	2	1515 AB4				
	(codes L1R, K1R)	2	1515 TR6				
	(codes L1T, K1T, L2T, K2T, L8T, K8T)	2	1515 VT6				
23-113-52	STRIP, Instrument Panel to Windshield Glass						
	P1, P2						
	(codes L1B, K1B, L5B, L4B, K4B, M1B, M4B, M5B, H1B, H2B, H4B, H5B, P4B)	1	3710 AB8	3710 AB8	3710 AB8	3710 AB8	3710 AB8
	(codes M1Q, M4Q, H1Q, H2Q, H4Q, H5Q, P4Q)	1	3710 AQ8	3710 AQ8	3710 AQ8	3710 AQ8	3710 AQ8
	(codes L1R, K1R, L5R, L4R, K4R, M1R, M4R, M5R, H1R, H2R, H4R, H5R, P4R)	1	3710 AR9	3710 AR9	3710 AR9	3710 AR9	3710 AR9
	(codes L1T, K1T, L2T, K2T, L8T, K8T, T8T, L5T, L4T, K4T, M1T, M4T, M5T, H1T, H2T, H4T)	1	3710 AT8	3710 AT8	3710 AT8	3710 AT8	
	(codes H5X, P4X, P4U)	1	3710 AX9	3710 AX9	---- ---	3710 AX9	3710 AX9
	(codes H1Y, H2Y, H4Y, H5Y, P4Y)	1	3710 AY8	3710 AY8	3710 AY8	3710 AY8	3710 AY8

● Indicates use as required.
⊟ Indicates parts not listed in any previous parts book. Right and left part numbers are on same line, first number is right, second number is left.
* Indicates change or addition.

Printed in U.S.A.
Prices and specifications subject to change without notice.
April 1966, Supersedes May 1965.

MyMopar.com

CODE	REMARKS	PER CAR	SED.	4D H.T	STA. WGN.	2D H.T	CV. CP.
23-113-56	WEATHERCORD, Folding Top Header R1, R2 (black)	1	---- ---	---- ---	---- ---	---- ---	1946 VX9
23-113-58	RETAINER, Instrument Panel to Windshield Glass Finish Strip P1, P2	1	2571 683	2571 683	2571 683	2571 683	2571 683
23-113-84	WELT, Folding Top Header R1, R2 (black)	1	---- ---	---- ---	---- ---	---- ---	1959 VX8
	(white)	1	---- ---	---- ---	---- ---	---- ---	1959 VW2
	R1, R2, P1, P2 (dust boot filler channel)	★	---- ---	---- ---	---- ---	---- ---	2572 166
23-114-2	NOTE: For Specific Reference to Body Cloth see Illustrated Section.						
23-114-10	BINDING, Wire-on (5/8") R1, R2 (blue)	1	---- ---	---- ---	---- ---	---- ---	1903 VB1
	(white)	1	---- ---	---- ---	---- ---	---- ---	1903 VW1
	(black)	1	---- ---	---- ---	---- ---	---- ---	*1903 TX8
23-114-15	NOTE: For Specific Reference to Vinyl Material see Illustrated Section.						
23-115-4	PUSH NUT, Front Seat Back to Cushion R1, R2, P2	4	---- ---	---- ---	2410 102	---- ---	2410 102
	RETAINER, 3rd Seat Hinge Support R1, R2, P2	2	---- ---	---- ---	2410 102		
23-115-6	CLIP, Tailgate Opening Pillar Cover Upper Retaining P1, P2	6	---- ---	---- ---	2581 395		
	PIN, Front Seat Back Frame to Cushion Frame Mounting R1, R2, P2	4	---- ---	---- ---	---- ---	2410 054	2410 054
	CLIP, Front Seat Outer Hinge Arm Cover R1, R2	2	*2494 114	---- ---	---- ---	*2494 114	*2494 114
23-115-8	CLIP, Wheelhouse Cover P1, P2	13	---- ---	---- ---	2572 142		
	(belt bar to spare tire cover)	2	---- ---	---- ---	2581 718		

NOTES

★ Indicates use as required.
⊟ Indicates parts not listed in any previous parts book.
April 1966, Supersedes May 1965.

Printed in U.S.A.
Prices and specifications subject to change without notice.
Right and left part numbers are on same line, first number is right, second number is left.
* Indicates change or addition.

MyMopar.com

1965 VALIANT

INTERIOR TRIM

HOW TO USE INTERIOR TRIM ILLUSTRATIONS

The illustrations in this section are actual and each body style showing the Interior Trim is included.

The letters shown on the illustration indicate the description of the part and the part type code when referred to the legend which appears preceding the listing of the parts. The letters are consistent throughout the illustrations as "A" is always a Door Trim Panel, Code 23-92-5.

The numbers on the illustration indicate the distribution of material and type of material used. The numbers may vary with each illustration. The legend appears on the illustration.

Appearing throughout this section are part numbers containing both letters and numbers. These are good serviceable part numbers. The combination of letters and numbers merely indicates the parts are keyed to the interior color of the vehicles on which they are used.

For complete information on "How to Order" Trim Parts, see Master Parts Price List.

MyMopar.com

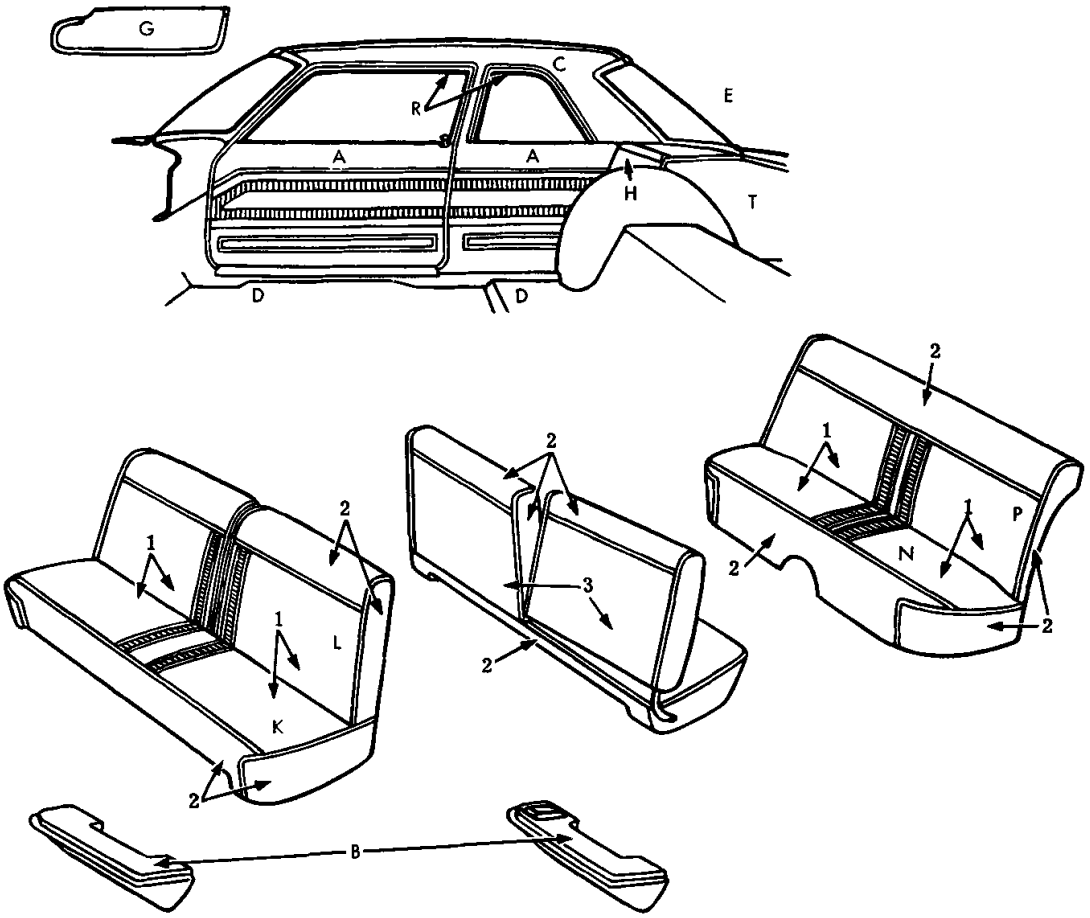

19T0109

ITEM	TYPE OF MATERIAL	PART TYPE CODE	MAT'L WIDTH	PART NUMBERS AND COLORS BLUE	RED	TAN	
1	Vinyl 32 oz.	23-114-15	54″	0491 ABB	0491 ARR	0491 ATT	
2	Vinyl 30 oz.	23-114-15	54″	0405 AB4	*0441 VR6	0405 VT6	
3	Vinyl 37 oz.	23-114-15	58″	0417 AB4	0417 VR6	0417 VT6	

Distribution Drawing Legend Page Appears Following Illustration Section

1965 VALIANT AV1-L, AV2-L 2 DOOR SEDAN
VINYL TRIM
CODES L4B, L4R, L4T

MyMopar.com

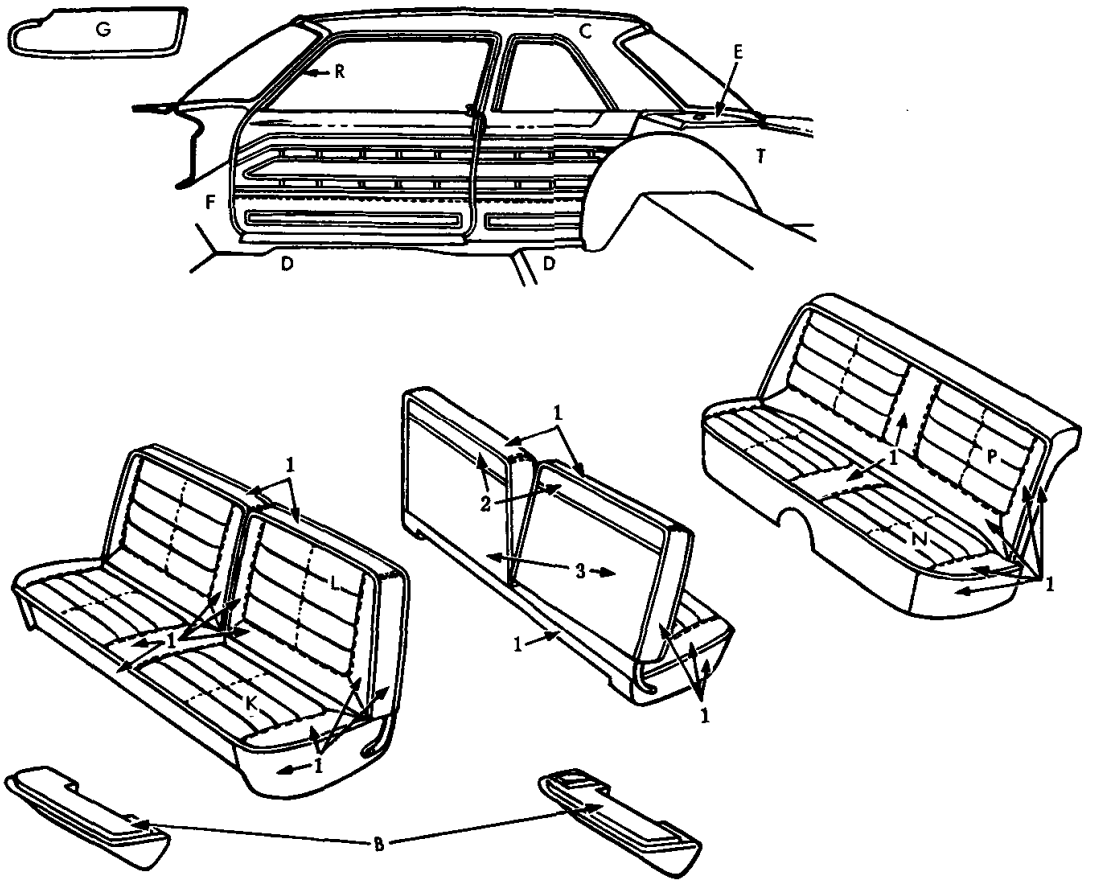

19T0112

ITEM	TYPE OF MATERIAL	PART TYPE CODE	MAT'L WIDTH	PART NUMBERS AND COLORS BLUE	TURQUOISE	RED	TAN
1	Vinyl 32 oz.	23-114-15	54″	0405 AB4	0405 AQ4	*0441 VR6	0405 VT6
2	Vinyl 37 oz.	23-114-15	58″	0417 AB4	0417 AQ4	0417 VR6	0417 VT6
3	Vinyl 37 oz.	23-114-15	58″	0489 ABB	0489 AQQ	0489 ARR	0489 ATT

Distribution Drawing Legend Page Appears Following Illustration Section

1965 VALIANT AV1-H, AV2-H 2 DOOR SEDAN
CLOTH AND VINYL TRIM
CODES H1B, H1Q, H1R, H1T

MyMopar.com

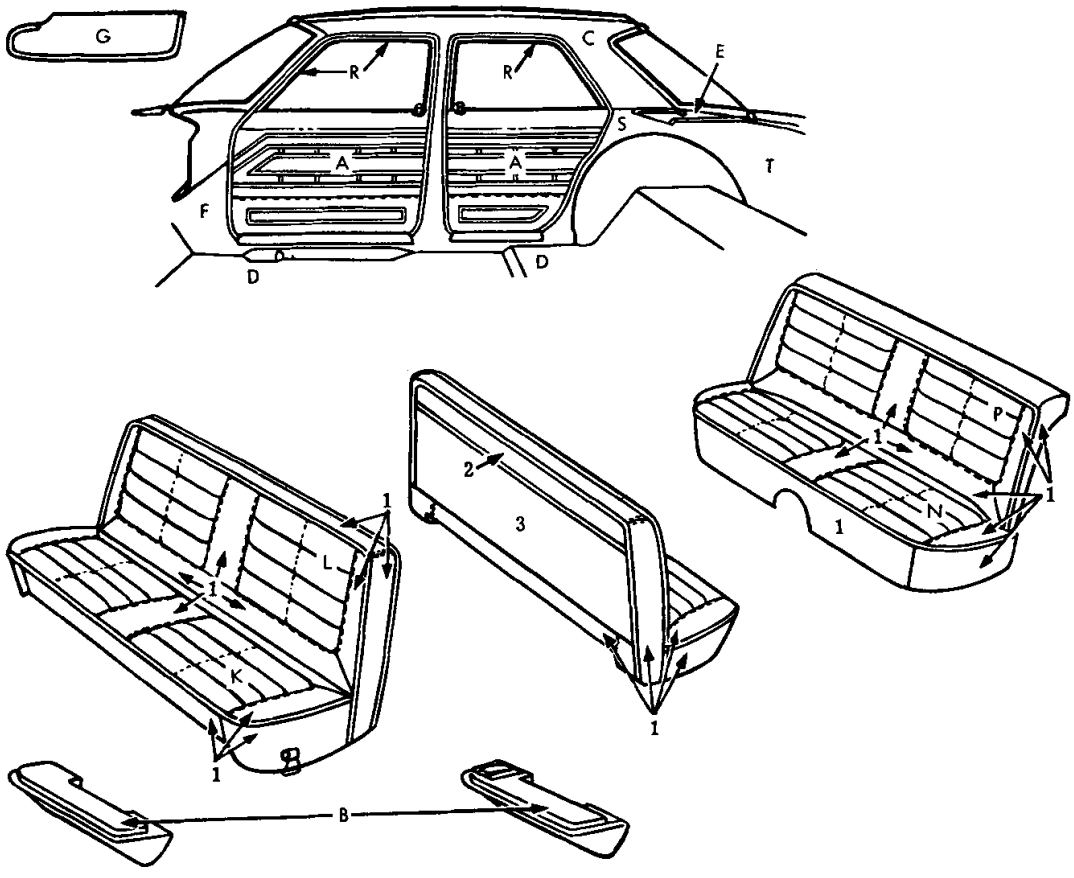

19T0113

ITEM	TYPE OF MATERIAL	PART TYPE CODE	MAT'L WIDTH	PART NUMBERS AND COLORS BLUE	TURQUOISE	RED	TAN
1	Vinyl 32 oz.	23-114-15	54″	0405 AB4	0405 AQ4	*0441 VR6	0405 VT6
2	Vinyl 37 oz.	23-114-15	58″	0417 AB4	0417 AQ4	0417 VR6	0417 VT6
3	Vinyl 37 oz.	23-114-15	58″	0489 ABB	0489 AQQ	⊟0489 ARR	0489 ATT

Distribution Drawing Legend Page Appears Following Illustration Section

1965 VALIANT AV1-H, AV2-H 4 DOOR SEDAN
CLOTH AND VINYL TRIM
CODES H1B, H1Q, H1R, H1T

★ Indicates use as required.
⊟ Indicates parts not listed in any previous parts book.
May 1965, Supersedes Sept. 4, 1964.

Printed in U.S.A.
Prices and specifications subject to change without notice.
* Indicates change or addition.
MyMopar.com

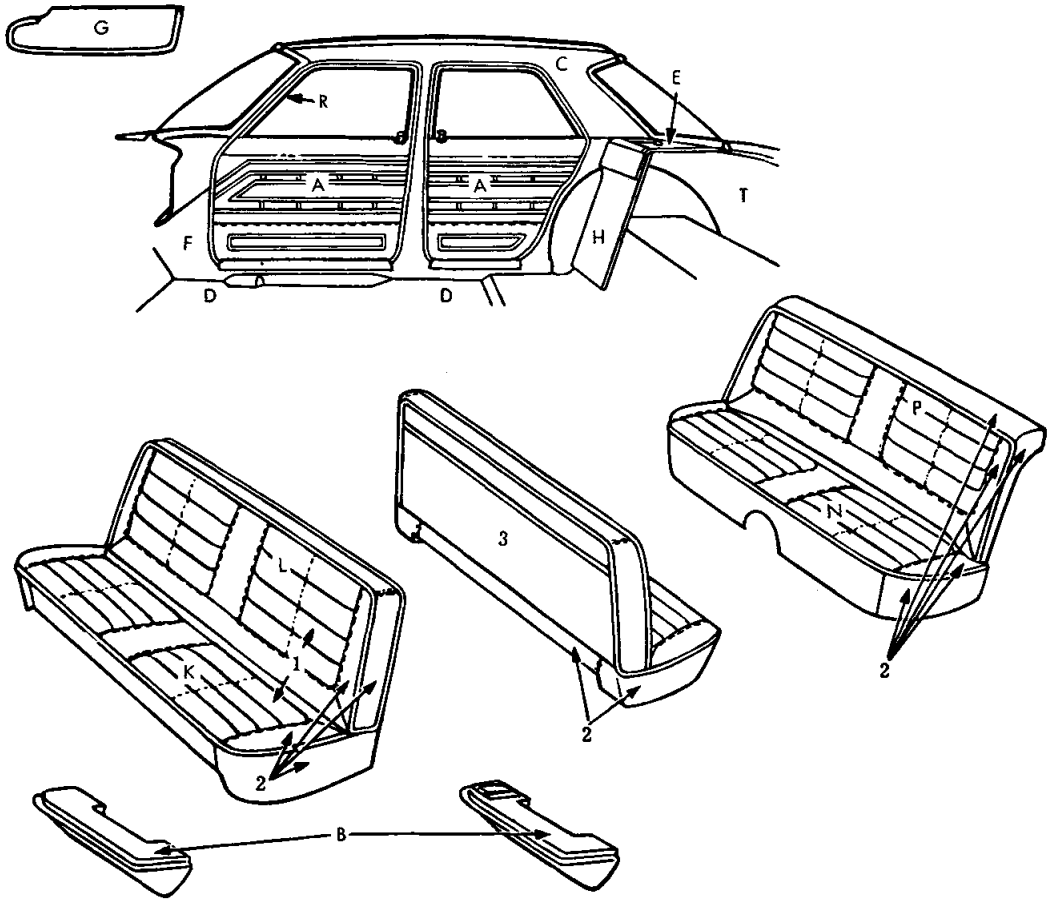

19T0116A

ITEM	TYPE OF MATERIAL	PART TYPE CODE	MAT'L WIDTH	PART NUMBERS AND COLORS BLUE	TURQUOISE	RED	TAN
1	Vinyl 35.5 oz.	23-114-15	54"	0441 AB8	0441 AQ8	0441 AR5	*0441 VT6
2	Vinyl 32 oz.	23-114-15	54"	0405 AB4	0405 AQ4	*0441 VR6	0405 VT6
3	Vinyl 37 oz.	23-114-15	54"	0417 AB4	0417 AQ4	0417 VR6	0417 VT6

Distribution Drawing Legend Page Appears Following Illustration Section

1965 VALIANT AV1-H, AV2-H 4 DOOR SEDAN
VINYL TRIM
CODES H4B, H4Q, H4R, H4T

MyMopar.com

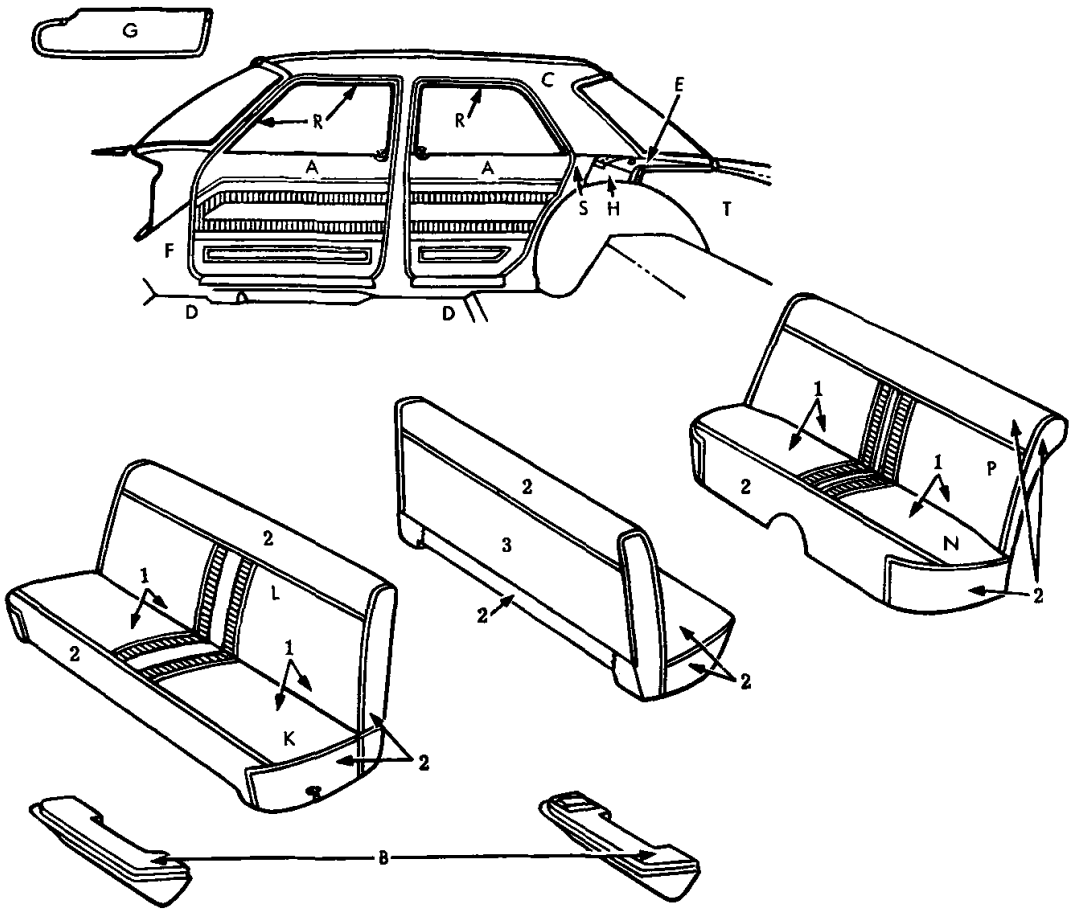

19T0110

ITEM	TYPE OF MATERIAL	PART TYPE CODE	MAT'L WIDTH	PART NUMBERS AND COLORS BLUE	RED	TAN	
1	Vinyl 32 oz.	23-114-15	54"	0491 ABB	0491 ARR	0491 ATT	
2	Vinyl 30 oz.	23-114-15	54"	0405 AB4	*0441 VR6	0405 VT6	
3	Vinyl 37 oz.	23-114-15	58"	0417 AB4	0417 VR6	0417 VT6	

Distribution Drawing Legend Page Appears Following Illustration Section

1965 VALIANT AV1-L, AV2-L 4 DOOR SEDAN
VINYL TRIM
CODES L4B, L4R, L4T

★ Indicates use as required.
⊟ Indicates parts not listed in any previous parts book.
May 1965, Supersedes Sept. 4, 1964.

Printed in U.S.A.
Prices and specifications subject to change without notice.
*Indicates change or addition.

MyMopar.com

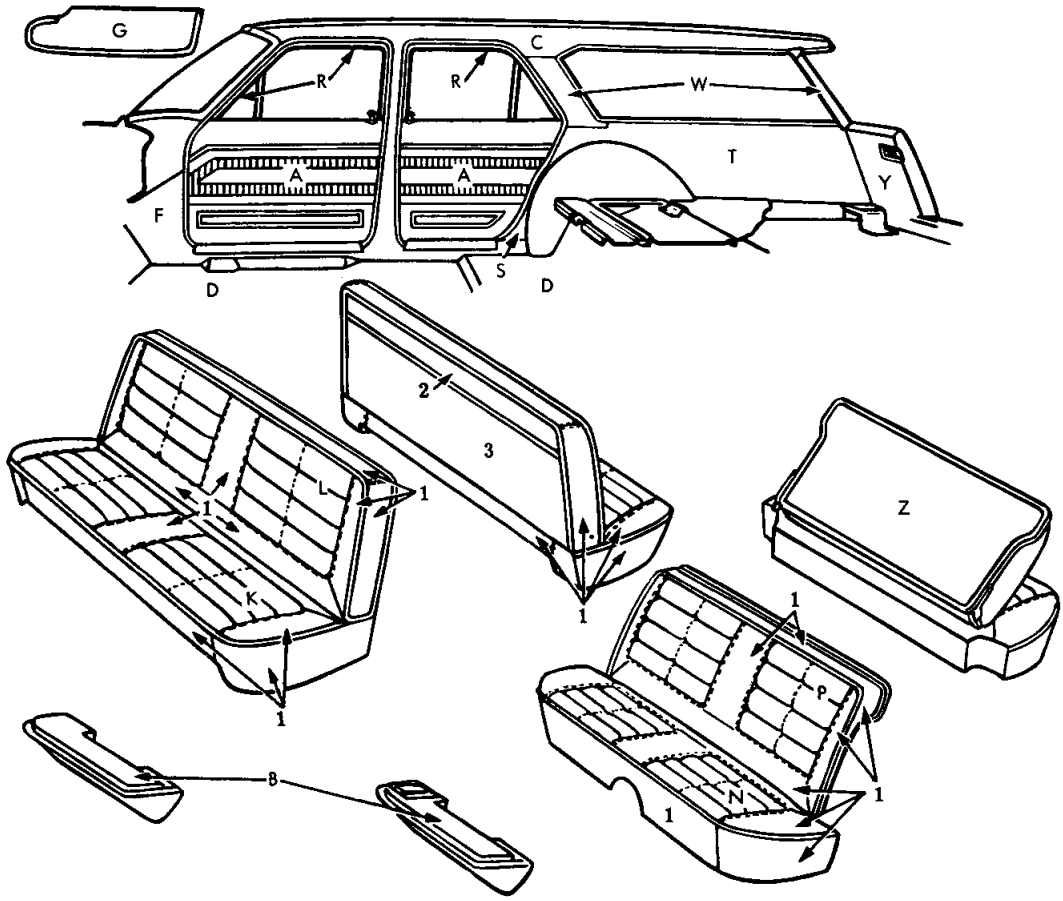

19T0114

ITEM	TYPE OF MATERIAL	PART TYPE CODE	MAT'L WIDTH	PART NUMBERS AND COLORS BLUE	TURQUOISE	RED	TAN
1	Vinyl 32 oz.	23-114-15	54"	0405 AB4	0405 AQ4	*0441 VR6	0405 VT6
2	Vinyl 37 oz.	23-114-15	58"	0417 AB4	0417 AQ4	0417 VR6	0417 VT6
3	Vinyl 37 oz.	23-114-15	58"	0489 ABB	0489 AQQ	0489 ARR	0489 ATT

Distribution Drawing Legend Page Appears Following Illustration Section

1965 VALIANT AV1-H, AV2-H STATION WAGON
CLOTH AND VINYL TRIM
CODES H1B, H1Q, H1R, H1T

MyMopar.com

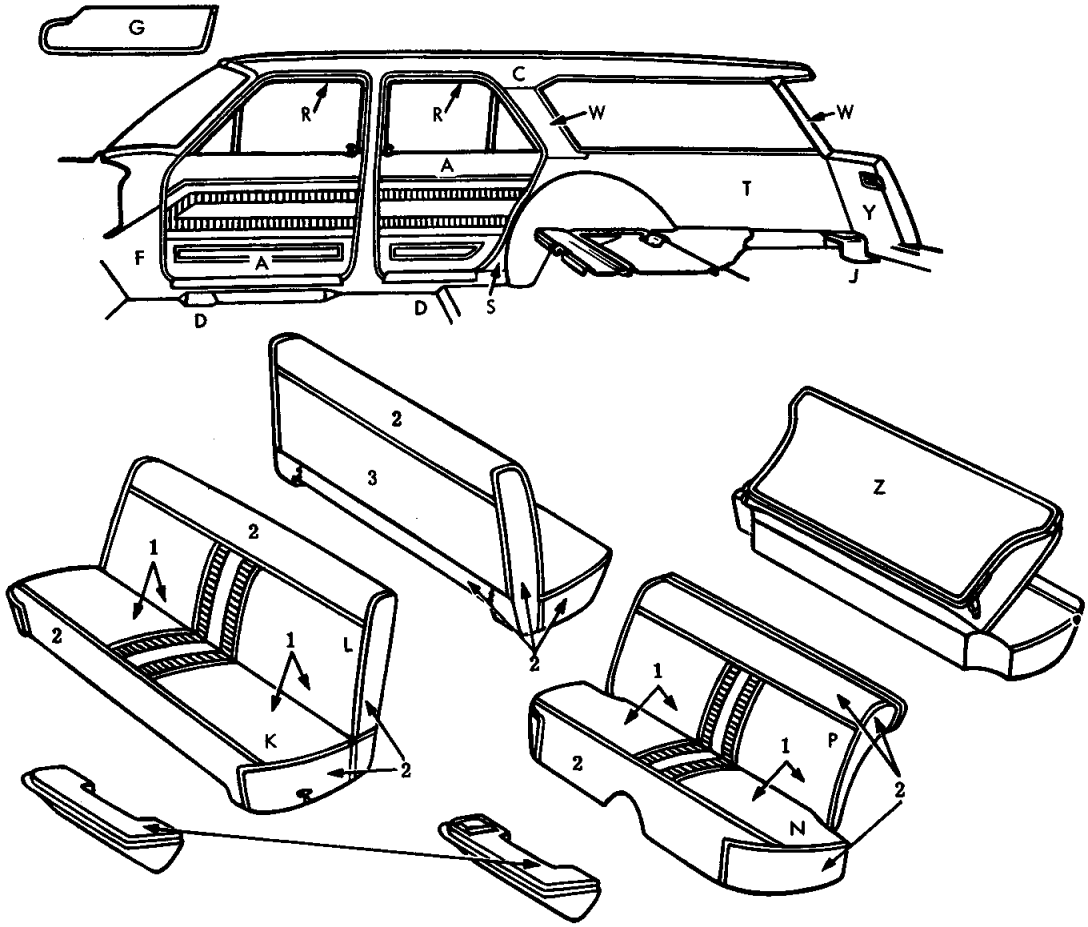

19T0111

ITEM	TYPE OF MATERIAL	PART TYPE CODE	MAT'L WIDTH	PART NUMBERS AND COLORS BLUE	RED	TAN	
1	Vinyl 32 oz.	23-114-15	54"	0491 ABB	0491 ARR	0491 ATT	
2	Vinyl 30 oz.	23-114-15	54"	0405 AB4	*0441 VR6	0405 VT6	
3	Vinyl 37 oz.	23-114-15	58"	0417 AB4	0417 VR6	0417 VT6	

Distribution Drawing Legend Page Appears Following Illustration Section

1965 VALIANT AV1-L, AV2-L STATION WAGON
VINYL TRIM
CODES L4B, L4R, L4T

MyMopar.com

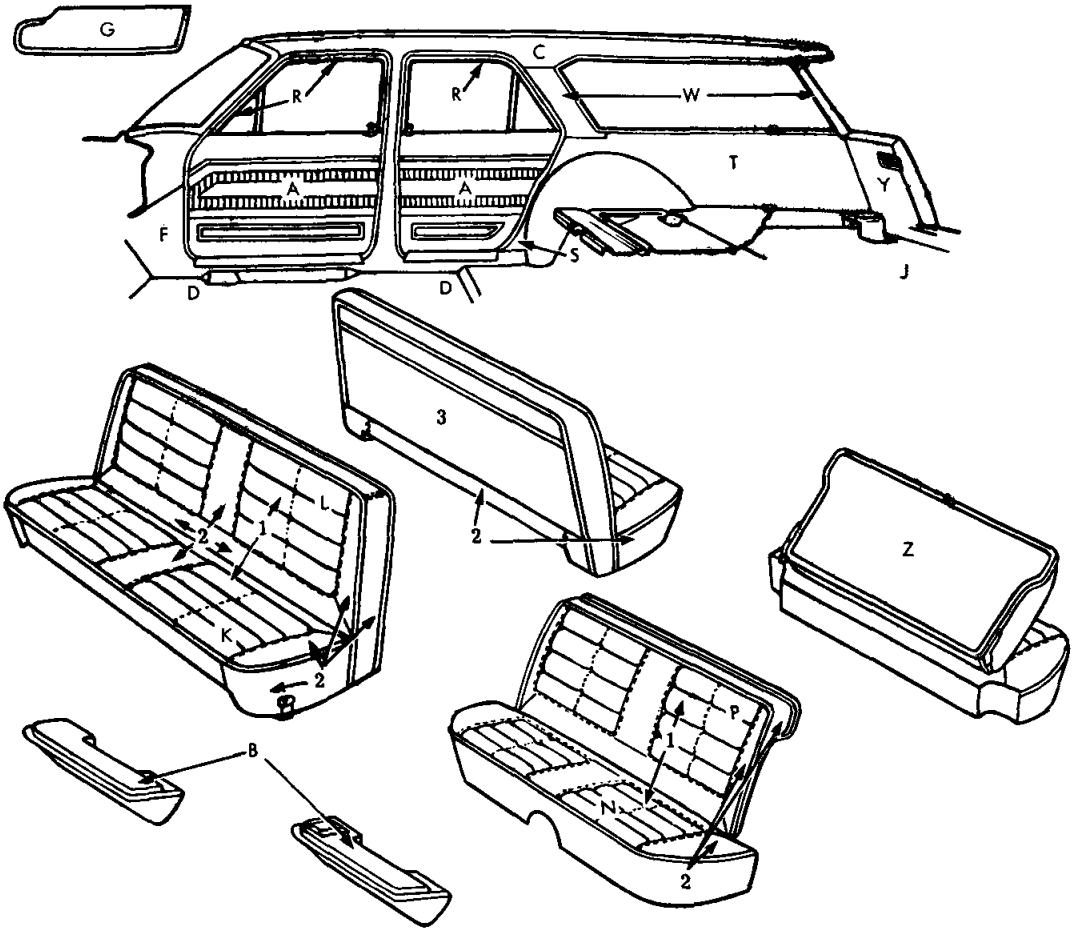

19T0117 A

ITEM	TYPE OF MATERIAL	PART TYPE CODE	MAT'L WIDTH	PART NUMBERS AND COLORS BLUE	TURQUOISE	RED	TAN
1	Vinyl 35.5 oz.	23-114-15	54"	0441 AB8	0441 AQ8	0441 AR5	*0441 VT6
2	Vinyl 32 oz.	23-114-15	54"	0405 AB4	0405 AQ4	*0441 VR6	0405 VT6
3	Vinyl 37 oz.	23-114-15	54"	0417 AB4	0417 AQ4	0417 VR6	0417 VT6

Distribution Drawing Legend Page Appears Following Illustration Section

1965 VALIANT AV1-H, AV2-H STATION WAGON
VINYL TRIM
CODES H4B, H4Q, H4R, H4T

★ Indicates use as required.
B Indicates parts not listed in any previous parts book.
• Indicates change or addition.

Printed in U.S.A.
Prices and specifications subject to change without notice.
May 1965, Supersedes Sept. 4, 1964.

MyMopar.com

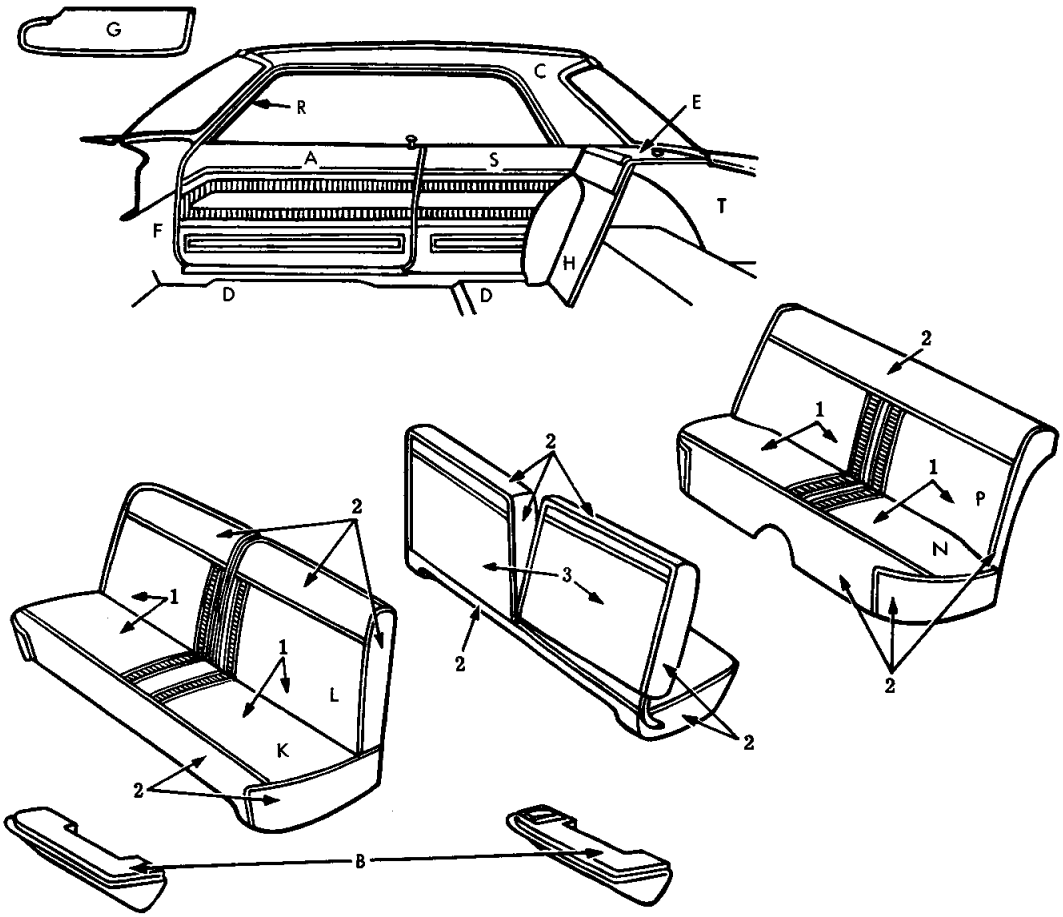

19T0108

ITEM	TYPE OF MATERIAL	PART TYPE CODE	MAT'L WIDTH	PART NUMBERS AND COLORS BLUE	RED	TAN	
1	Vinyl 32 oz.	23-114-15	54"	0491 ABB	0491 ARR	0491 ATT	
2	Vinyl 32 oz.	23-114-15	54"	0405 AB4	*0441 VR6	0405 VT6	
3	Vinyl 37 oz.	23-114-15	58"	0417 AB4	0417 VB6	0417 VT6	

Distribution Drawing Legend Page Appears Following Illustration Section

1965 VALIANT AV1-L 2 DOOR HARD TOP
VINYL TRIM
CODES L4B, L4R, L4T

★ Indicates use as required.
⊟ Indicates parts not listed in any previous parts book.
May 1965, Supersedes Sept. 4, 1964.

Printed in U.S.A.
Prices and specifications subject to change without notice.
• Indicates change or addition.
MyMopar.com

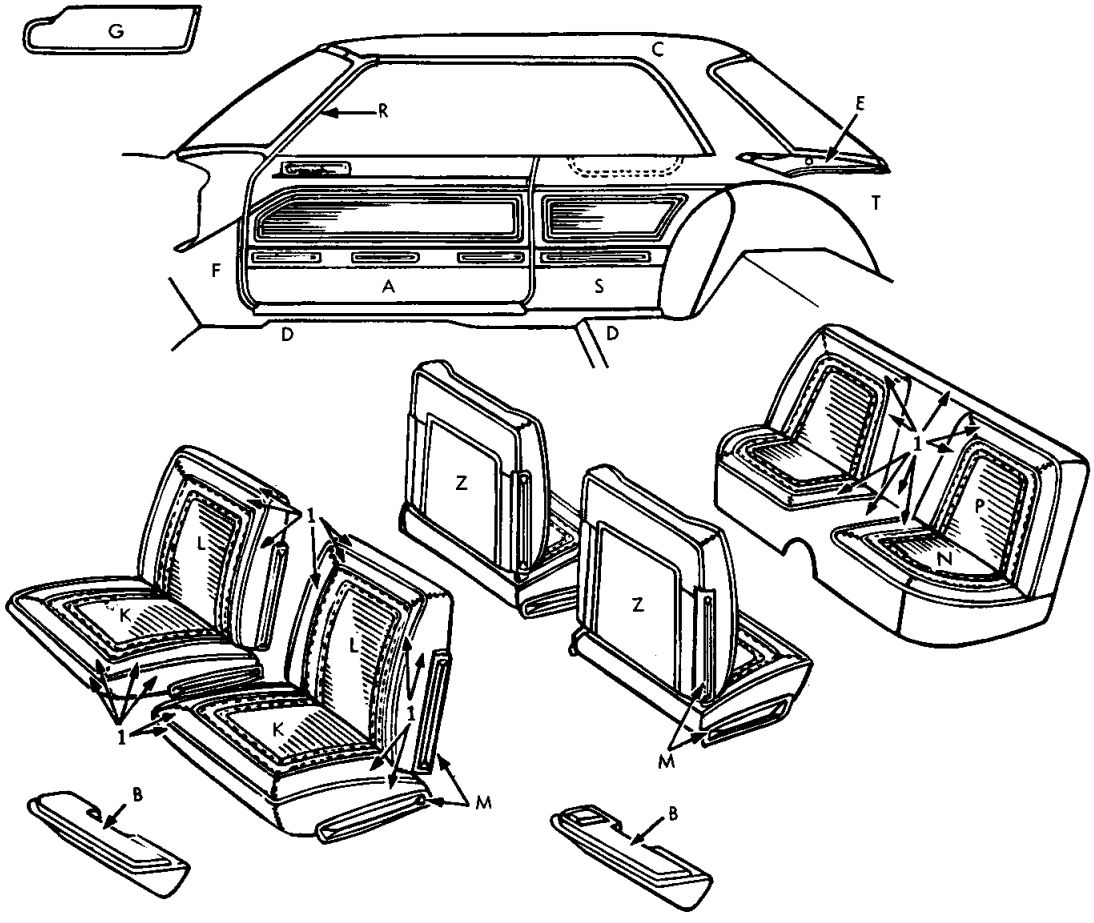

19T0118

ITEM	TYPE OF MATERIAL	PART TYPE CODE	MAT'L WIDTH	PART NUMBERS AND COLORS BLUE	RED	BLACK	GOLD
1	Vinyl 35.5 oz.	23-114-15	54"	⊟0441 AB4	0441 VR6	0441 VX9	⊟0441 AY3

Distribution Drawing Legend Page Appears Following Illustration Section

1965 VALIANT AV1-P, AV2-P 2 DOOR HARD TOP
VINYL TRIM
CODES P4B, P4R, P4X, P4Y

★ Indicates use as required.
⊟ Indicates parts not listed in any previous parts book.

Printed in U.S.A.
Prices and specifications subject to change without notice.
September 4, 1964.

MyMopar.com

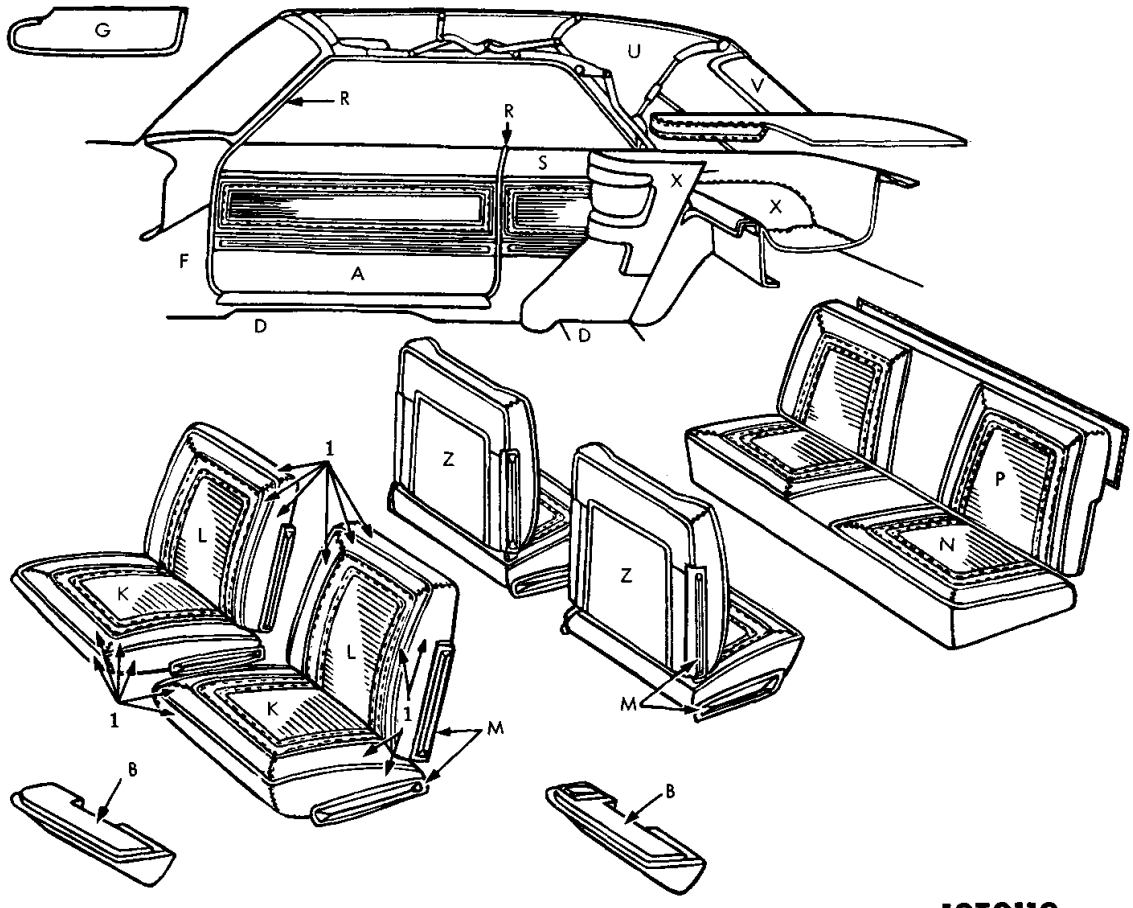

19T0119

ITEM	TYPE OF MATERIAL	PART TYPE CODE	MAT'L WIDTH	PART NUMBERS AND COLORS BLUE	RED	BLACK	GOLD
1	Vinyl 35.5 oz.	23-114-15	54"	⊟0441 AB4	0441 VR6	0441 VX9	⊟0441 AY3

Distribution Drawing Legend Page Appears Following Illustration Section

1965 VALIANT AV1-P, AV2-P CONVERTIBLE
VINYL TRIM
CODES P4B, P4R, P4X P4Y

★ Indicates use as required.
⊟ Indicates parts not listed in any previous parts book.
September 4, 1964.

Printed in U.S.A.
Prices and specifications subject to change without notice.
MyMopar.com

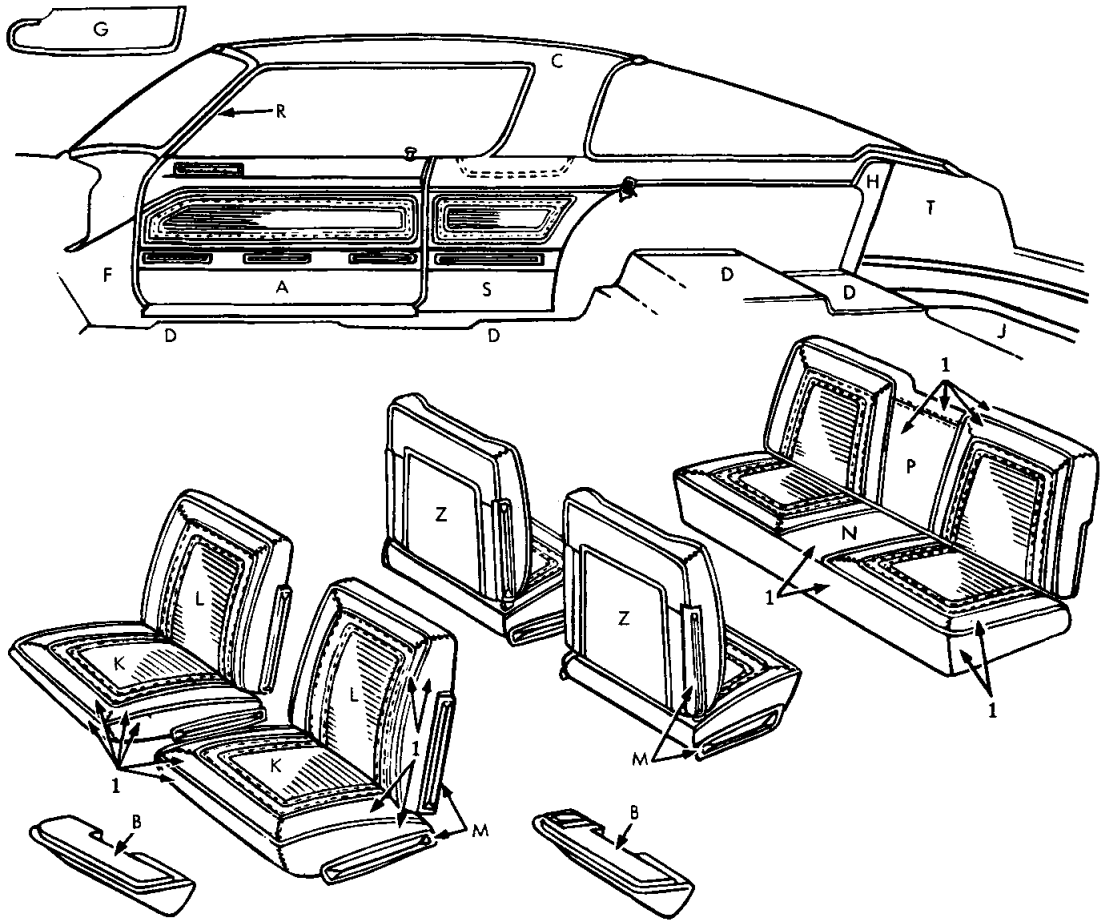

19T0120

ITEM	TYPE OF MATERIAL	PART TYPE CODE	MAT'L WIDTH	PART NUMBERS AND COLORS			
				BLUE	RED	BLACK	GOLD
1	Vinyl 35.5 oz.	23-114-15	54"	⊟0441 AB4	0441 VR6	0441 VX9	⊟0441 AY3

Distribution Drawing Legend Page Appears Following Illustration Section

1965 VALIANT AV1-P, AV2-P 2 DOOR HARD TOP
VINYL TRIM
CODES P4B, P4R, P4X, P4Y

★ Indicates use as required.
⊟ Indicates parts not listed in any previous parts book.

Printed in U.S.A.
Prices and specifications subject to change without notice.
September 4, 1964.

MyMopar.com

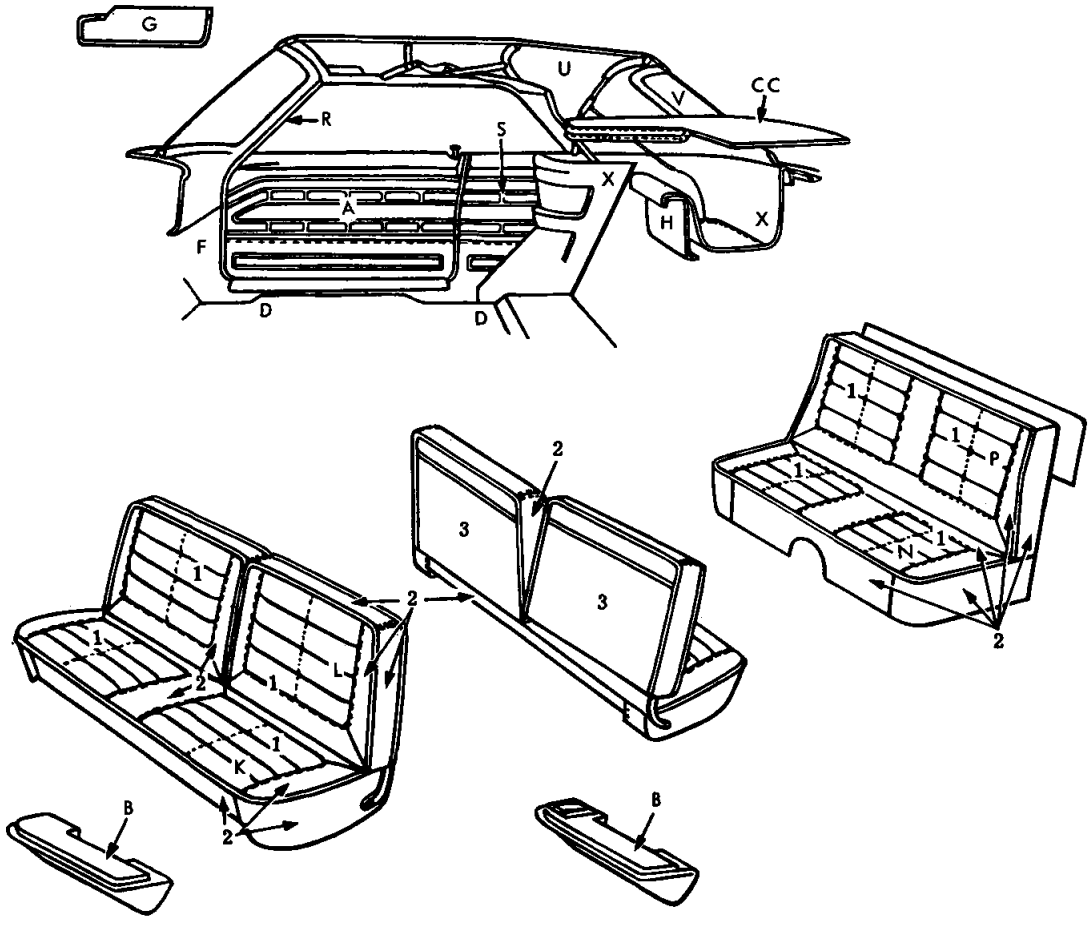

19T0115A

ITEM	TYPE OF MATERIAL	PART TYPE CODE	MAT'L WIDTH	PART NUMBERS AND COLORS BLUE	TURQUOISE	RED	TAN
1	Vinyl 35.5 oz.	23-114-15	54"	0441 AB8	0441 AQ8	0441 AR5	0441 AT8
2	Vinyl 32 oz.*	23-114-15	54"	0405 AB4	0405 AQ4	*0441 VR6	0405 VT6
3	Vinyl 37 oz.	23-114-15	54"	0417 AB4	0417 AQ4	0417 VR6	0417 VT6

Distribution Drawing Legend Page Appears Following Illustration Section

1965 VALIANT AV1-H, AV2-H CONVERTIBLE
VINYL TRIM
CODES H4B, H4Q, H4R, H4T

MyMopar.com

1965 VALIANT - A SERIES

Distribution Drawing Legend

See Illustration For Letter Identification

Letter	Description	Code
A	Panel, Door Trim	23-92-5
B	Arm Rest, Front Door Pad and Plate	23-76-11
	Base	23-76-9
	Arm Rest, Rear Door Pad and Plate	23-76-63
	Base	23-76-9
	Arm Rest, Rear Quarter	23-76-66
	Pad and Plate	23-76-76
	Base	23-76-9
C	Headlining	23-86-3
D	Floor Cover, Front, Carpet	23-79-3
	Rear, Carpet	23-79-33
E	Panel, Shelf Trim	23-102-3
F	Panel, Cowl Trim	23-91-6
G	Panel, Visor	23-103-3
H	Panel, Luggage Compartment, Front	23-96-3
J	Carpet, Luggage Compartment Floor	23-79-64
K	Cover, Front Seat Cushion	23-108-5
L	Cover, Front Seat Back	23-108-16
M	Shield, Front Seat Side or Back	23-108-98
N	Cover, Rear Seat Cushion	23-109-36
P	Cover, Rear Seat Back	23-109-4
Q	Insert, Rear Seat Cushion Bottom Panel	23-109-40
R	Weathercord, Door	23-113-2
	Hinge Pillar	23-113-25
	Lock Pillar	23-113-30
S	Panel, Quarter Trim	23-101-3
T	Panel or Cover, Luggage Compt. Side Lining	23-96-8
U	Top Deck and Side Quarter	23-112-108
V	Curtain, Folding Top Back	23-112-45
W	Cover, Center Pillar	23-99-4
	Cover, Rear Upper Pillar	23-99-38
X	Well Cover, Pocket Panel, Pocket Panel Cover, Folding Top	23-112-153

MyMopar.com

BODY CODE	COLUMN LEGEND
	AV1-L, AV2-L (V100)
V-11 (21)	2 D. Sedan
V-13 (41)	4 D. Sedan
V-56 (45)	Station Wagon (6 Pass.)
	AV1-H, AV2-H (V200)
V-31 (21)	2 D. Sedan
V-33 (41)	4 D. Sedan
V-35 (27)	Convertible
V-76 (45)	Station Wagon (6 Pass.)
	AV1-P, AV2-P (Signet 200)
V-42 (23)	2 D. Hard Top
V-45 (27)	Convertible
V-49 (29)	2 D. Special Hard Top

CONVERTIBLE TOP COLOR LEGEND

1 Blue 2 White 0 Black

STARTING SERIAL NUMBERS

		Detroit Built	St. Louis Built	Los Angeles Built
AV1-L	(V100)	1152-100001	1157-100001	1155-100001
AV2-L	(V100)	V152-100001	V157-100001	V155-100001
AV1-L	(V100 Station Wagon)	1552-100001	1557-100001	1555-100001
AV2-L	(V100 Station Wagon)	V552-100001	V557-100001	V555-100001
AV1-H	(V200)	1352-100001	1357-100001	1355-100001
AV2-H	(V200)	V352-100001	V357-100001	V355-100001
AV1-H	(V200 Station Wagon)	1752-100001	1757-100001	1755-100001
AV2-H	(V200 Station Wagon)	V752-100001	V757-100001	V755-100001
AV1-P	(Signet 200)	1452-100001	1457-100001	1455-100001
AV2-P	(Signet 200)	V452-100001	V457-100001	V455-100001

TRIM CODE	MODEL	MATERIAL			COLOR	6 WD. SED.	SED.	4D H.T	STA. WGN.	2D H.T	CV. CP.
		Cloth	Vinyl	Leather							
L4B	V1-L, V2-L	-	★	-	Blue	-	★	-	★	-	-
L4R	V1-L, V2-L	-	★	-	Red	-	★	-	★	-	-
L4T	V1-L, V2-L	-	★	-	Tan	-	★	-	★	-	-
L4B	V1-L, V2-L Export,	-	★	-	Blue	-	-	-	-	★	-
L4R	V1-L, V2-L Mexico	-	★	-	Red	-	-	-	-	★	-
L4T	V1-L, V2-L Job Only	-	★	-	Tan	-	-	-	-	★	-
H1B, H4B	V1-H, V2-H	★	★	-	Blue	-	★	-	★	-	★
H1R, H4R	V1-H, V2-H	★	★	-	Red	-	★	-	★	-	★
H1T, H4T	V1-H, V2-H	★	★	-	Tan	-	★	-	★	-	★
H1Q, H4Q	V1-H, V2-H	★	★	-	Turquoise	-	★	-	★	-	★
P4B	V1-P, V2-P	-	★	-	Blue	-	-	-	-	★	★
P4X	V1-P, V2-P	-	★	-	Black	-	-	-	-	★	★
P4Y	V1-P, V2-P	-	★	-	Gold	-	-	-	-	★	★
P4R	V1-P, V2-P	-	★	-	Red	-	-	-	-	★	★

● Indicates use as required.
⊟ Indicates parts not listed in any previous parts book.

Printed in U.S.A.
Prices and specifications subject to change without notice.
Right and left part numbers are on same line, first number is right, second number is left.

MyMopar.com

CODE	REMARKS	PER CAR	SED.	4D H.T	STA. WGN.	2D H.T	CV. CP.
	NOTE: RIGHT HAND AND LEFT HAND PARTS LISTED ON THE SAME LINE. Whenever right and left hand parts are identified by consecutive part numbers, they will be listed as in the following example: PANEL, Door Trim 3108-9V Interpreted, this indicates that Panel, right is Part No. 3108 V and Panel, left is Part No. 3109 V.						
23-76-9	BASE, Door and Quarter Arm Rest						
	V1, V2						
	(codes L4B, H1B, H4B)	2	*1208-9 AB4	---- ---	*1208-9 AB4	*1208-9 AB4	1208-9 VZ1
	(codes H1Q, H4Q)	2	⊟1208-9 AQ4	---- ---	⊟1208-9 AQ4	⊟1208-9 AQ4	1208-9 VZ1
	(codes L4T, H1T, H4T)	2	*1208-9 VT6	---- ---	*1208-9 VT6	*1208-9 VT6	1208-9 VZ1
	(codes L4R, H1R, H4R)	2	*1208-9 AR5	---- ---	*1208-9 AR5	*1208-9 AR5	1208-9 VZ1
	(codes P4B, P4R, P4X, P4Y)	2	---- ---	---- ---	---- ---	1210-1 VZ1	1210-1 VZ1
23-76-11	PAD, Front Door Arm Rest						
	V1-L, V2-L, V1-H, V2-H						
	(codes L4B, H1B, H4B)	1	*1216-7 AB4	---- ---	*1216-7 AB4	*1216-7 AB4	*1216-7 AB4
	(codes H1Q, H4Q)	1	*1216-7 AQ4	---- ---	*1216-7 AQ4	*1216-7 AQ4	*1216-7 AQ4
	(codes L4T, H1T, H4T)	1	*1216-7 VT6	---- ---	*1216-7 VT6	*1216-7 VT6	*1216-7 VT6
	(codes L4R, H1R, H4R)	1	1216-7 AR5	---- ---	1216-7 AR5	1216-7 AR5	1216-7 AR5
	V1-P, V2-P						
	(code P4B)	1	---- ---	---- ---	---- ---	1222-3 AB4	1222-3 AB4
	(code P4R)	1	---- ---	---- ---	---- ---	1222-3 VR6	*1222-3 VR6
	(code P4X)	1	---- ---	---- ---	---- ---	1222-3 VX9	1222-3 VX9
	(code P4Y)	1	---- ---	---- ---	---- ---	1222-3 AY3	1222-3 AY3
23-76-16	NUT, Door and Quarter Arm Rest Attaching						
	V1, V2						
	Rear	★	1280 134	---- ---	1280 134	1280 134	
23-76-63	PAD, Rear Door Arm Rest						
	V1, V2						
	(codes L4B, H1B, H4B)	1	*1214-5 AB4	---- ---	*1214-5 AB4		
	(codes H1Q, H4Q)	1	*1214-5 AQ4	---- ---	*1214-5 AQ4		
	(codes L1T, L4T, H1T, H4T)	1	*1214-5 VT6	---- ---	*1214-5 VT6		
	(codes L1R, L4R, H1R, H4R)	1	*1214-5 AR5	---- ---	*1214-5 AR5		
23-76-76	PAD, Quarter Arm Rest						
	V1, V2 (2 D.)						
	(codes L4B, H1B)	1	*1214-5 AB4	---- ---	---- ---	*1214-5 AB4	
	(code P4B)	1	---- ---	---- ---	---- ---	1214-5 AB4	
	(code H1Q)	1	*1214-5 AQ4				
	(codes L4T, H1T)	1	*1214-5 VT6	---- ---	---- ---	*1214-5 VT6	
	(codes L4R, H1R)	1	1214-5 AR5	---- ---	---- ---	1214-5 AR5	
	V1-P, V2-P						
	(code P4R)	1	---- ---	---- ---	---- ---	1214-5 VR6	
	(code P4X)	1	---- ---	---- ---	---- ---	1214-5 VX9	
	(code P4T)	1	---- ---	---- ---	---- ---	1214-5 VT6	
	(code P4Y)	1	---- ---	---- ---	---- ---	1214-5 AY3	
	Screw (attaching)	4	---- ---	---- ---	---- ---	161 904	
	V1-H, V2-H						
	(codes H1B, H4B)	1	1764 AB8	---- ---	1764 AB8	1764 AB8	1764 AB8
	(codes H1Q, H4Q)	1	1764 AQ8	---- ---	1764 AQ8	1764 AQ8	1764 AQ8
	(codes H1T, H4T)	1	1764 AT8	---- ---	1764 AT8	1764 AT8	1764 AT8
23-79-3	CARPET, Front Floor						
	V1, V2 (floor shift)						
	(codes L4B, H1B, H4B)	1	*1770 AB8	---- ---	*1770 AB8	*1770 AB8	*1770 AB8
	(codes H1Q, H4Q)	1	*1770 AQ8	---- ---	*1770 AQ8	*1770 AQ8	*1770 AQ8
	(codes L4R, H1R, H4R)	1	⊟1770 AR6	---- ---	⊟1770 AR6	⊟1770 AR6	⊟1770 AR6
	(codes L4T, H1T, H4T)	1	*1770 AT8	---- ---	*1770 AT8	*1770 AT8	*1770 AT8

★ Indicates use as required.
⊟ Indicates parts not listed in any previous parts book.
Right and left part numbers are on same line, first number is right, second number is left.
* Indicates change or addition.

MyMopar.com

CODE	REMARKS	PER CAR	SED.	4D H.T	STA. WGN.	2D H.T	CV. CP.
23-79-3	CARPET, Front Floor - Cont'd						
	V1-H, V2-H (automatic trans.)						
	(codes H1B, H4B)	1	*1764 AB8	---- ---	*1764 AB8	*1764 AB8	*1764 AB8
	(codes H1Q, H4Q)	1	*1764 AQ8	---- ---	*1764 AQ8	*1764 AQ8	*1764 AQ8
	(codes H1R, H4R)	1	⊟1764 AR6	---- ---	⊟1764 AR6	⊟1764 AR6	⊟1764 AR6
	(codes H1T, H4T)	1	*1764 AT8	---- ---	*1764 AT8	*1764 AT8	*1764 AT8
	V1-P, V2-P (4 speed, floor shift)						
	(code P4B)	1	---- ---	---- ---	---- ---	*1760 AB8	*1760 AB8
	(code P4R)	1	---- ---	---- ---	---- ---	*1760 AR6	*1760 AR6
	(code P4X)	1	---- ---	---- ---	---- ---	*1760 AX8	*1760 AX8
	(code P4Y)	1	---- ---	---- ---	---- ---	⊟1760 AY8	⊟1760 AY8
	(automatic trans. w/console)						
	(code P4B)	1	---- ---	---- ---	---- ---	*1759 AB8	*1759 AB8
	(code P4R)	1	---- ---	---- ---	---- ---	⊟1759 AR6	⊟1759 AR6
	(code P4X)	1	---- ---	---- ---	---- ---	*1759 AX8	*1759 AX8
	(code P4Y)	1	---- ---	---- ---	---- ---	⊟1759 AY8	⊟1759 AY8
	(automatic trans. w/o console)						
	(code P4B)	1	---- ---	---- ---	---- ---	*1766 AB8	*1766 AB8
	(code P4R)	1	---- ---	---- ---	---- ---	*1766 AR6	*1766 AR6
	(code P4X)	1	---- ---	---- ---	---- ---	*1766 AY8	*1766 AY8
	(code P4Y)	1	---- ---	---- ---	---- ---	*1766 AX8	*1766 AX8
23-79-4	PLATE, Front Floor Accelerator Pedal Scuff V1, V2	1	2499 135	---- ---	2499 135	2499 135	2499 135
23-79-33	CARPET, Rear Floor						
	V1-L, V2-L, V1-H, V2-H						
	(codes H1B, H4B, L4B)	1	1709 AB8	---- ---	1709 AB8	1709 AB8	1710 AB8
	(codes H1Q, H4Q)	1	1709 AQ8	---- ---	1709 AQ8	---- ---	1710 AQ8
	(codes L4T, H1T, H4T)	1	1709 AT8	---- ---	1709 AT8	1709 AT8	1710 AT8
	(codes L4R, H1R, H4R)	1	1709 AR6	---- ---	1709 AR6	1709 AR6	1710 AR6
	V1, V2 (axle kick-up front trim panel)	1	---- ---	---- ---	*4314 VX9		
	V1-P, V2-P						
	(code P4B)	1	---- ---	---- ---	---- ---	1711 AB8	1712 AB8
	(code P4R)	1	---- ---	---- ---	---- ---	1711 AR6	1712 AR6
	(code P4X)	1	---- ---	---- ---	---- ---	1711 AX8	1712 AX8
	(code P4Y)	1	---- ---	---- ---	---- ---	1711 AY8	1712 AY8
	V1-H, V2-H						
	(code H4B)	1	---- ---	---- ---	---- ---	---- ---	1710 AB8
	(code H4Q)	1	---- ---	---- ---	---- ---	---- ---	1710 AQ8
	(code H4R)	1	---- ---	---- ---	---- ---	---- ---	1710 AR6
	(code H4T)	1	---- ---	---- ---	---- ---	---- ---	1710 AT8
	V1-P, V2-P (Barracuda)						
	(code P4B)	1	---- ---	---- ---	---- ---	1750 AB8	
	(code P4R)	1	---- ---	---- ---	---- ---	1750 AR6	
	(code P4X)	1	---- ---	---- ---	---- ---	1750 AX8	
	(code P4Y)	1	---- ---	---- ---	---- ---	1750 AY8	
	(center floor pan cover)						
	(code P4B)	1	---- ---	---- ---	---- ---	6545 VB8	
	(code P4R)	1	---- ---	---- ---	---- ---	6545 VR6	
	(code P4X)	1	---- ---	---- ---	---- ---	⊟6545 AX8	
	(code P4Y)	1	---- ---	---- ---	---- ---	6545 VY8	

★ Indicates use as required.
⊟ Indicates parts not listed in any previous parts book.
May 1965 Supersedes Sept. 4, 1964.

MyMopar.com

Printed in U.S.A.
Prices and specifications subject to change without notice.
Right and left part numbers are on same line, first number is right, second number is left.
* Indicates change or addition.

CODE	REMARKS	PER CAR	SED.	4D H.T	STA. WGN.	2D H.T	CV. CP.
23-79-64	CARPET, Luggage Compartment Floor						
	V1-P, V2-P						
	(code P4B)	1	---- ---	---- ---	---- ---	6119 VB8	
	(code P4R)	1	---- ---	---- ---	---- ---	6119 VR6	
	(code P4X)	1	---- ---	---- ---	---- ---	6119 AX8	
	(code P4Y)	1	---- ---	---- ---	---- ---	6119 VY8	
23-82-30	HOOK, Coat Hanger						
	V1, V2	2	2581 908	---- ---	2581 908	2581 908	
23-82-39	BRACKET, Coat Hook Support						
	V1, V2	2	2481 175	---- ---	2481 175	2481 175	
	V1-P, V2-P (Barracuda)	2	---- ---	---- ---	---- ---	2528 314	
23-84-3	PAD, Instrument Panel Trim						
	V1, V2						
	(codes L4B, H1B, H4B, P4B)	1	4239 VB6	---- ---	4239 VB6	4239 VB6	4239 VB6
	(codes H1Q, H4Q)	1	4239 VQ6	---- ---	4239 VQ6	4239 VQ6	4239 VQ6
	(codes L1R, L4R, H1R, H4R, P4R)	1	4239 VR6	---- ---	4239 VR6	4239 VR6	4239 VR6
	(codes L1T, H1T, H4T, L4T)	1	4239 VT6	---- ---	4239 VT6	4239 VT6	4239 VT6
	(code P4Y)	1	---- ---	---- ---	---- ---	4239 VY6	4239 VY6
	(code P4X)	1	---- ---	---- ---	---- ---	4239 VX8	4239 VX8
23-86-2	COVER, Roof Outside						
	V1, V2 (white)	1	---- ---	---- ---	---- ---	4925 VW1	
	(black)	1	---- ---	---- ---	---- ---	4925 VX8	
	(Barracuda) (white)	1	---- ---	---- ---	---- ---	8026 AW1	
	(black)	1	---- ---	---- ---	---- ---	8026 AX8	
23-86-3	HEADLINING and LISTINGS						
	V1, V2						
	(codes L4B, H1B, H4B, P4B)	1	*7100 AB3	---- ---	*7102 AB3	*7100 AB3	
	(codes H1Q, H4Q)	1	7100 AQ3	---- ---	7102 AQ3	*7100 AQ3	
	(codes L4R, H1R, H4R, P4R)	1	*7100 AW2	---- ---	*7102 AW2	*7100 AW2	
	(codes L4T, H1T, H4T)	1	7100 AT3	---- ---	7102 AT3	*7100 AT3	
	(code P4Y)	1	---- ---	---- ---	---- ---	*7100 AY3	
	(code P4X)	1	---- ---	---- ---	---- ---	*7100 AX9	
	V1-P, V2-P (Barracuda)						
	(code P4B)	1	---- ---	---- ---	---- ---	7106 VB3	
	(code P4R)	1	---- ---	---- ---	---- ---	7106 VR6	
	(code P4Y)	1	---- ---	---- ---	---- ---	7106 VY3	
	(code P4X)	1	---- ---	---- ---	---- ---	7106 VX9	
23-86-8	RETAINER, Roof Outside Cover						
	V1-H, V2-H, V1-P, V2-P						
	(side front)	1	---- ---	---- ---	---- ---	2483 780-1	
	(side rear)	1	---- ---	---- ---	---- ---	2484 164-5	
	V1-P, V2-P (side)	1	---- ---	---- ---	---- ---	2603 956-7	
	(rear)	1	---- ---	---- ---	---- ---	2603 958	
23-86-10	SUPPORT, Roof Bow						
	V1, V2	2	2242 504	---- ---	---- ---	2242 504	
		3	---- ---	---- ---	2243 251		
	V1-P, V2-P (Barracuda)	1	---- ---	---- ---	---- ---	2526 775	
23-86-19	STRIP, Headlining Retaining						
	V1, V2 Front	1	2242 996-7	---- ---	2242 996-7		

★ Indicates use as required.
⊟ Indicates parts not listed in any previous parts book.
Right and left part numbers are on same line, first number is right, second number is left.
* Indicates change or addition.

MyMopar.com

Printed in U.S.A.
Prices and specifications subject to change without notice.
April 1966, Supersedes May 1965.

CODE	REMARKS	PER CAR	SED.	4D H.T	STA. WGN.	2D H.T	CV. CP.
23-86-19	STRIP, Headlining Retaining - Cont'd						
	V1, V2 (2 D.)						
	Rear	1	2243 668-9				
	(4 D.)						
	Rear	1	2243 224-5				
	V1-P, V2-P (Barracuda)	1	---- ---	---- ---	---- ---	2526 788-9	
	Screw (attaching)	2	---- ---	125 978			
	Screw (side attaching)	18	---- ---	---- ---	---- ---	6023 938	
	Screw (sealing)	★	---- ---	---- ---	---- ---	6024 568	
	Fastener	★	---- ---	---- ---	---- ---	6000 922	
23-86-31	PROTECTOR, Roof Panel Cover Rear Retaining Screw						
	V1-P, V2-P (Barracuda)	15	---- ---	---- ---	---- ---	⊟2483 767	
23-91-6	PANEL, Cowl Trim						
	V1, V2 (paint as required)	1	1402-3 VX8	---- ---	1402-3 VX8	1402-3 VX8	1402-3 VX8
23-92-5	PANEL, Door Trim						
	V1-L, V2-L, V1-H, V2-H (2 D.)						
	(code L4B)	1	3166-7 ABB	---- ---	---- ---	3166-7 ABB	
	(code L4R)	1	3166-7 ARR	---- ---	---- ---	3166-7 ARR	
	(code L4T)	1	3166-7 ATT	---- ---	---- ---	3166-7 ATT	
	(codes H1B, H4B)	1	3170-1 ABB	---- ---	---- ---	---- ---	3170-1 ABB
	(codes H1Q, H4Q)	1	3170-1 AQQ	---- ---	---- ---	---- ---	3170-1 AQQ
	(codes H1R, H4R)	1	3170-1 ARR	---- ---	---- ---	---- ---	3170-1 ARR
	(codes H1T, H4T)	1	3170-1 ATT	---- ---	---- ---	---- ---	3170-1 ATT
	(4 D.)						
	(code L4B) Front	1	3162-3 ABB	---- ---	3162-3 ABB		
	Rear	1	3240-1 ABB	---- ---	3240-1 ABB		
	(code L4R) Front	1	3162-3 ARR	---- ---	3162-3 ARR		
	Rear	1	3240-1 ARR	---- ---	3240-1 ARR		
	(code L4T) Front	1	3162-3 ATT	---- ---	3162-3 ATT		
	Rear	1	3240-1 ATT	---- ---	3240-1 ATT		
	(codes H1B, H4B) Front	1	3164-5 ABB	---- ---	3164-5 ABB		
	Rear	1	3242-3 ABB	---- ---	3242-3 ABB		
	V1-L, V2-L, V1-H, V2-H (4 D.)						
	Rear	1	3242-3 AQQ	---- ---	3242-3 AQQ		
	(codes H1R, H4R) Front	1	3164-5 ARR	---- ---	3164-5 ARR		
	Rear	1	3242-3 ARR	---- ---	3242-3 ARR		
	(codes H1T, H4T) Front	1	3164-5 ATT	---- ---	3164-5 ATT		
	Rear	1	3242-3 ATT	---- ---	3242-3 ATT		
	V1-P, V2-P						
	(code P4B)	1	---- ---	---- ---	---- ---	3172-3 AOB	3172-3 AOB
	(code P4R)	1	---- ---	---- ---	---- ---	*3172-3 VOR	*3172-3 VOR
	(code P4X)	1	---- ---	---- ---	---- ---	*3172-3 VOX	*3172-3 VOX
	(code P4Y)	1	---- ---	---- ---	---- ---	*3172-3 VOY	*3172-3 VOY
	Fastener	★	6000 365	---- ---	6000 365	6000 365	6000 365
23-96-3	PANEL, Luggage Compartment Front Lining						
	V1, V2	1	2419 102	---- ---	---- ---	2419 102	2440 956
	Clip (to seat back support)	2	6000 903	---- ---	---- ---	6000 903	6000 903
	Screw (attaching)	2	6024 229	---- ---	---- ---	6024 229	6024 229
	V1-P, V2-P (rear compartment security cover)						
	(code P4B)	1	---- ---	---- ---	---- ---	2951 VB8	
	(code P4R)	1	---- ---	---- ---	---- ---	2951 VR6	
	(code P4X)	1	---- ---	---- ---	---- ---	2951 AX8	
	(code P4Y)	1	---- ---	---- ---	---- ---	2951 VY8	

★ Indicates use as required.
⊟ Indicates parts not listed in any previous parts book.

MyMopar.com

CODE	REMARKS	PER CAR	SED.	4D H.T	STA. WGN.	2D H.T	CV. CP.
23-96-3	PANEL, Luggage Compartment Front Lining - Cont'd V1-P, V2-P (rear compartment security panel trimmed comp.)						
	(code P4B)	1	---- ---	---- ---	---- ---	⊟4858 V5B	
	(code P4R)	1	---- ---	---- ---	---- ---	⊟4858 V5R	
	(code P4X)	1	---- ---	---- ---	---- ---	⊟4858 A5X	
	(code P4Y)	1	---- ---	---- ---	---- ---	⊟4858 V5Y	
	(panel) (55 1/4" lgh.)	1	---- ---	---- ---	---- ---	⊟2528 894	
	(panel) (45 3/4" lgh.)	1	---- ---	---- ---	---- ---	⊟2602 109	
	(for Barracuda w/formula "S" package)						
	(code P4B)	1	---- ---	---- ---	---- ---	⊟8021 A4B	
	(code P4R)	1	---- ---	---- ---	---- ---	⊟8021 A4R	
	(code P4X)	1	---- ---	---- ---	---- ---	⊟8021 A4X	
	(code P4Y)	1	---- ---	---- ---	---- ---	⊟8021 A4Y	
	(panel)	1	---- ---	---- ---	---- ---	⊟2603 464	
23-96-8	CARPET, Wheelhouse V1-P, V2-P						
	(code P4B)	1	---- ---	---- ---	---- ---	⊟4452-3 VB8	
	(code P4R)	1	---- ---	---- ---	---- ---	⊟4452-3 VR6	
	(code P4X)	1	---- ---	---- ---	---- ---	⊟4452-3 AX8	
	(code P4Y)	1	---- ---	---- ---	---- ---	⊟4452-3 VY8	
23-96-10	PANEL, Luggage Compartment Deck Opening Lower V1-P, V2-P (paint as required) (black)	1	---- ---	---- ---	---- ---	4450 VX9	
	(cover, upper inner extension)	1	---- ---	---- ---	---- ---	⊟4448-9 VX9	
	Screw (attaching)	2	---- ---	---- ---	---- ---	6023 381	
23-96-16	COVER, Deck Lid Inner Panel Access Hole V1-P, V2-P (paint as required)	1	---- ---	---- ---	---- ---	⊟4107 VX8	
	Fastener	4	---- ---	---- ---	---- ---	*6000 903	
23-99-4	COVER, Center Pillar V1, V2						
	(codes L4B, H1B, H4B)	1	---- ---	---- ---	*2018-9 VB6		
	(codes H1Q, H4Q)	1	---- ---	---- ---	*2018-9 VQ6		
	(codes L4R, H4R)	1	---- ---	---- ---	*2018-9 AR7		
	(codes L4T, H1T, H4T)	1	---- ---	---- ---	*2018-9 VT6		
23-99-17	RETAINER, Body Front Pillar Cover V1-P, V2-P	1	---- ---	---- ---	---- ---	*2527 910-1	2527 910-1
	Screw	4	---- ---	---- ---	---- ---	*6024 271	
23-99-38	PANEL, Rear Upper Pillar Reinforcement Trim V1, V2						
	(codes L4B, H1B, H4B)	1	---- ---	---- ---	2016-7 VB6		
	(codes H1Q, H4Q, L4Q)	1	---- ---	---- ---	2016-7 VQ6		
	(codes L4T, H1T, H4T)	1	---- ---	---- ---	2016-7 VT6		
	(codes L4R, H1R, H4R)	1	---- ---	---- ---	2016-7 TR6		
23-101-3	PANEL, Rear Quarter Trim V1-H, V2-H (2 D.)						
	(code H1B)	1	3346-7 ABB				
	(code H1Q)	1	3346-7 AQQ				
	(code H1R)	1	3346-7 ARR				
	(code H1T)	1	3346-7 ATT				

★ Indicates use as required.
⊟ Indicates parts not listed in any previous parts book.
Right and left part numbers are on same line, first number is right, second number is left.
* Indicates change or addition.

MyMopar.com

Printed in U.S.A.
Prices and specifications subject to change without notice.
May 1965, Supersedes Sept. 4, 1964.

CODE	REMARKS	PER CAR	SED.	4D H.T	STA. WGN.	2D H.T	CV. CP.
23-101-3	PANEL, Rear Quarter Trim Cont'd						
	V1-L, V2-L (2 D.)						
	(code L4B)	1	3340-1 ABB	---- ---	---- ---	3340-1 ABB	
	(code L4R)	1	3340-1 ARR	---- ---	---- ---	3340-1 ARR	
	(code L4T)	1	3340-1 ATT	---- ---	---- ---	3340-1 ATT	
	V1, V2 (upper)						
	(codes L4B, H1B, H4B)	1	---- ---	---- ---	2018-9 VB6		
	(codes L4Q, H1Q, H4Q)	1	---- ---	---- ---	2018-9 VQ6		
	(codes L4R, H4R)	1	---- ---	---- ---	2018-9 AR7		
	(codes L4T, H4T, H1T)	1	---- ---	---- ---	2018-9 VT6		
	V1, V2 (lower) (paint as required) (codes L1B, L4B, H1B, H4B, L4Q, H1Q, H4Q, L4R, H4R, L4T, H1T, H4T)	1	2054-5 AT6	---- ---	2054-5 AT6		
	V1-P, V2-P						
	(code P4B)	1	---- ---	---- ---	---- ---	3342-3 AOB	3344-5 AOB
	(code P4R)	1	---- ---	---- ---	---- ---	3342-3 AOR	3344-5 AOR
	(code P4X)	1	---- ---	---- ---	---- ---	3342-3 AOX	3344-5 AOX
	(code P4Y)	1	---- ---	---- ---	---- ---	3342-3 AOY	3344-5 AOY
	(Barracuda)						
	(code P4B)	1	---- ---	---- ---	---- ---	4578-9 AOB	
	(code P4R)	1	---- ---	---- ---	---- ---	4578-9 VOR	
	(code P4X)	1	---- ---	---- ---	---- ---	4578-9 VOX	
	(code P4Y)	1	---- ---	---- ---	---- ---	4578-9 VOY	
	V1-H, V2-H						
	(code H4B)	1	---- ---	---- ---	---- ---	---- ---	3348-9 ABB
	(code H4Q)	1	---- ---	---- ---	---- ---	---- ---	3348-9 AQQ
	(code H4R)	1	---- ---	---- ---	---- ---	---- ---	3348-9 ARR
	(code H4T)	1	---- ---	---- ---	---- ---	---- ---	3348-9 ATT
	Screw (attaching)	2	6023 381	---- ---	6023 381		
23-102-3	PANEL, Shelf Trim						
	V1, V2 (paint as required)	1	1316 AT6	---- ---	---- ---	1316 AT6	
	Clip	2	6000 903	---- ---	---- ---	6000 903	
23-103-3	PANEL, Visor Trim						
	V1, V2						
	(codes L1B, L4B, L5B, H1B, H4B, H5B)	2	1101 AB3	---- ---	1101 AB3	1101 AB3	
	(codes L1Q, L4Q, H1Q, H4Q)	2	1101 AQ3	---- ---	1101 AQ3	1101 AQ3	
	(codes L1R, L4R, L5R, H1R, H4R, H5R)	2	1101 AW2	---- ---	1101 AW2	1101 AW2	
	(codes L1T, L4T, L5T, H1T, H4T, H5T)	2	1101 AT3	---- ---	1101 AT3	1101 AT3	
	V1-P, V2-P						
	(code P4B)	2	---- ---	---- ---	---- ---	1102 AB3	
	(code P4R)	2	---- ---	---- ---	---- ---	*1102 BW2	
	(code P4R) (Barracuda)	2	---- ---	---- ---	---- ---	1102 AR6	
	(code P4Y)	2	---- ---	---- ---	---- ---	1102 AY3	
	(code P4X)	2	---- ---	---- ---	---- ---	*1102 BX9	
	V1-H, V2-H, V1-P, V2-P						
	(codes H4B, P4B)	2	---- ---	---- ---	---- ---	---- ---	1100 AB4
	(codes H4R, P4R)	2	---- ---	---- ---	---- ---	---- ---	1100 VR6
	(code H4Q)	2	---- ---	---- ---	---- ---	---- ---	1100 AQ4
	(code H4T)	2	---- ---	---- ---	---- ---	---- ---	1100 VT6
	(code P4Y)	2	---- ---	---- ---	---- ---	---- ---	1100 AY3
	(code P4X)	2	---- ---	---- ---	---- ---	---- ---	1100 VX9

★ Indicates use as required.
⊟ Indicates parts not listed in any previous parts book.
April 1966, Supersedes May 1965.

Printed in U.S.A.
Prices and specifications subject to change without notice.
Right and left part numbers are on same line, first number is right, second number is left.
* Indicates change or addition.

MyMopar.com

CODE	REMARKS	PER CAR	SED.	4D H.T	STA. WGN.	2D H.T	CV. CP.
23-103-10	ARM and BRACKET, Visor V1, V2						
	(chrome)	1	2292 580-1	---- ---	2292 580-1	2292 580-1	
	Washer (tension spring)	2	6000 106	---- ---	6000 106	6000 106	
	Screw (bracket attaching)	6	187 709	---- ---	187 709	187 709	
23-103-48	SUPPORT, Visor Inner V1, V2	2	---- ---	---- ---	---- ---	---- ---	2162 628
23-108-4	CUSHION, Front Seat V1-L, V2-L (2 D.) (std. springs)						
	(code L4B)	1	5304 A4B	---- ---	---- ---	5304 A4B	
	(code L4R)	1	5304 A4R	---- ---	---- ---	5304 A4R	
	(code L4T)	1	5304 A4T	---- ---	---- ---	5304 A4T	
	(std. springs w/2 1/4" airfoam pad)						
	(code L4B)	1	5305 A4B	---- ---	---- ---	5305 A4B	
	(code L4R)	1	5305 A4R	---- ---	---- ---	5305 A4R	
	(code L4T)	1	5305 A4T	---- ---	---- ---	5305 A4T	
	(heavy duty springs)						
	(code L4B)	1	5306 A4B	---- ---	---- ---	5306 A4B	
	(code L4R)	1	5306 A4R	---- ---	---- ---	5306 A4R	
	(code L4T)	1	5306 A4T	---- ---	---- ---	5306 A4T	
	(heavy duty springs w/2 1/4" airfoam pad)						
	(code L4B)	1	5307 A4B	---- ---	---- ---	5307 A4B	
	(code L4R)	1	5307 A4R	---- ---	---- ---	5307 A4R	
	(code L4T)	1	5307 A4T	---- ---	---- ---	5307 A4T	
	V1-H, V2-H (2 D.) (std. springs w/2 1/4" airfoam pad)						
	(code H1B)	1	5311 A1B				
	(code H1Q)	1	5311 A1Q				
	(code H1R)	1	5311 A1R				
	(code H1T)	1	5311 A1T				
	(std. springs w/o airfoam pad)						
	(code H1B)	1	5310 A1B				
	(code H1Q)	1	5310 A1Q				
	(code H1R)	1	5310 A1R				
	(code H1T)	1	5310 A1T				
	V1-L, V2-L (4 D.) (std. springs w/o airfoam pad)						
	(code L4B)	1	5314 A4B	---- ---	5314 A4B		
	(code L4R)	1	5314 A4R	---- ---	5314 A4R		
	(code L4T)	1	5314 A4T	---- ---	5314 A4T		
	(std. springs w/airfoam pad)						
	(code L4B)	1	5315 A4B	---- ---	5315 A4B		
	(code L4R)	1	5315 A4R	---- ---	5315 A4R		
	(code L4T)	1	5315 A4T	---- ---	5315 A4T		
	(w/heavy duty springs)						
	(code L4B)	1	5316 A4B	---- ---	5316 A4B		
	(code L4R)	1	5316 A4R	---- ---	5316 A4R		
	(code L4T)	1	5316 A4T	---- ---	5316 A4T		

● Indicates use as required.
⊟ Indicates parts not listed in any previous parts book.
Right and left part numbers are on same line, first number is right, second number is left.
* Indicates change or addition.

MyMopar.com

Printed in U.S.A.
Prices and specifications subject to change without notice.
May 1965, Supersedes Sept. 4, 1964.

CODE	REMARKS	PER CAR	SED.	4D H.T	STA. WGN.	2D H.T	CV. CP.
23-108-4	CUSHION, Front Seat - Cont'd (heavy duty springs w/airfoam pad)						
	V1-L, V2-L (4 D.)						
	(code L4B)	1	5317 A4B	---- ---	5317 A4B		
	(code L4R)	1	5317 A4R	---- ---	5317 A4R		
	(code L4T)	1	5317 A4T	---- ---	5317 A4T		
	V1-H, V2-H (4 D.) (std. springs w/airfoam pad)						
	(code H1B)	1	5309 A1B	---- ---	5309 A1B		
	(code H1Q)	1	5309 A1Q	---- ---	5309 A1Q		
	(code H1R)	1	5309 A1R	---- ---	5309 A1R		
	(code H1T)	1	5309 A1T	---- ---	5309 A1T		
	(std. springs w/o airfoam pad)						
	(code H1B)	1	5308 A1B	---- ---	5308 A1B		
	(code H1Q)	1	5308 A1Q	---- ---	5308 A1Q		
	(code H1R)	1	5308 A1R	---- ---	5308 A1R		
	(code H1T)	1	5308 A1T	---- ---	5308 A1T		
	(std. springs w/3/4" airfoam pad)						
	(code H4B)	1	5318 A4B	---- ---	5318 A4B	---- ---	5320 A4B
	(code H4Q)	1	5318 A4Q	---- ---	5318 A4Q	---- ---	5320 A4Q
	(code H4R)	1	5318 A4R	---- ---	5318 A4R	---- ---	5320 A4R
	(code H4T)	1	5318 A4T	---- ---	5318 A4T	---- ---	5320 A4T
	(std. springs w/2 1/4" airfoam pad)						
	(code H4B)	1	5319 A4B	---- ---	5319 A4B	---- ---	5321 A4B
	(code H4Q)	1	5319 A4Q	---- ---	5319 A4Q	---- ---	5321 A4Q
	(code H4R)	1	5319 A4R	---- ---	5319 A4R	---- ---	5321 A4R
	(code H4T)	1	5319 A4T	---- ---	5319 A4T	---- ---	5321 A4T
	V1-P, V2-P						
	(code P4B)	1	---- ---	---- ---	---- ---	5134-5 A4B	
	(code P4R)	1	---- ---	---- ---	---- ---	5134-5 V5R	
	(code P4X)	1	---- ---	---- ---	---- ---	5134-5 A5X	
	(code P4Y)	1	---- ---	---- ---	---- ---	5134-5 V5Y	
23-108-5	COVER, Front Seat Cushion						
	V1-L, V2-L (2 D.)						
	(code L4B)	1	5801 A4B	---- ---	---- ---	5801 A4B	
	(code L4R)	1	5801 A4R	---- ---	---- ---	5801 A4R	
	(code L4T)	1	5801 A4T	---- ---	---- ---	5801 A4T	
	V1-H, V2-H (2 D.)						
	(code H1B)	1	5803 A1B				
	(code H1Q)	1	5803 A1Q				
	(code H1R)	1	5803 A1R				
	(code H1T)	1	5803 A1T				
	V1-L, V2-L (4 D.)						
	(code L4B)	1	5806 A4B	---- ---	5806 A4B		
	(code L4R)	1	5806 A4R	---- ---	5806 A4R		
	(code L4T)	1	5806 A4T	---- ---	5806 A4T		
	V1-H, V2-H (4 D.)						
	(code H1B)	1	5802 A1B	---- ---	5802 A1B		
	(code H1Q)	1	5802 A1Q	---- ---	5802 A1Q		
	(code H1R)	1	5802 A1R	---- ---	5802 A1R		
	(code H1T)	1	5802 A1T	---- ---	5802 A1T		

★ Indicates use as required.
⊟ Indicates parts not listed in any previous parts book.

MyMopar.com

Printed in U.S.A.
Prices and specifications subject to change without notice.
Right and left part numbers are on same line, first number is right, second number is left.
* Indicates change or addition.

CODE	REMARKS	PER CAR	SED.	4D H.T	STA. WGN.	2D H.T	CV. CP.
23-108-5	COVER, Front Seat Cushion - Cont'd						
	V1-H, V2-H						
	(code H4B)	1	5807 A4B	---- ---	5807 A4B	---- ---	5808 A4B
	(code H4Q)	1	5807 A4Q	---- ---	5807 A4Q	---- ---	5808 A4Q
	(code H4R)	1	5807 A4R	---- ---	5807 A4R	---- ---	5808 A4R
	(code H4T)	1	5807 A4T	---- ---	5807 A4T	---- ---	5808 A4T
	V1-P, V2-P						
	(code P4B)	2	---- ---	---- ---	---- ---	5809 A4B	5809 A4B
	(code P4R)	2	---- ---	---- ---	---- ---	5809 V5R	5809 V5R
	(code P4X)	2	---- ---	---- ---	---- ---	5809 A5X	5809 A5X
	(code P4Y)	2	---- ---	---- ---	---- ---	5809 V5Y	5809 V5Y
23-108-12	BACK, Front Seat						
	V1-H, V2-H (2 D.)						
	(code H1B)	1	5508-9 A1B				
	(code H1Q)	1	5508-9 A1Q				
	(code H1R)	1	5508-9 A1R				
	(code H1T)	1	5508-9 A1T				
	V1-L, V2-L (2 D.) (std. springs)						
	(code L4B)	1	5504-5 A4B	---- ---	---- ---	5504-5 A4B	
	(code L4R)	1	5504-5 A4R	---- ---	---- ---	5504-5 A4R	
	(code L4T)	1	5504-5 A4T	---- ---	---- ---	5504-5 A4T	
	(heavy duty springs)						
	(code L4B)	1	5506-7 A4B	---- ---	---- ---	5506-7 A4B	
	(code L4R)	1	5506-7 A4R	---- ---	---- ---	5506-7 A4R	
	(code L4T)	1	5506-7 A4T	---- ---	---- ---	5506-7 A4T	
	V1-L, V2-L (std. springs)						
	(code L4B)	1	5511 A4B	---- ---	5511 A4B		
	(code L4R)	1	5511 A4R	---- ---	5511 A4R		
	(code L4T)	1	5511 A4T	---- ---	5511 A4T		
	(heavy duty springs)						
	(code L4B)	1	5513 A4B	---- ---	5513 A4B		
	(code L4R)	1	5513 A4R	---- ---	5513 A4R		
	(code L4T)	1	5513 A4T	---- ---	5513 A4T		
	V1-H, V2-H						
	(code H1B)	1	5503 A1B	---- ---	5503 A1B		
	(code H1Q)	1	5503 A1Q	---- ---	5503 A1Q		
	(code H1R)	1	5503 A1R	---- ---	5503 A1R		
	(code H1T)	1	5503 A1T	---- ---	5503 A1T		
	(code H4B)	1	5516 A4B	---- ---	5516 A4B	---- ---	5514-5 A4B
	(code H4Q)	1	5516 A4Q	---- ---	5516 A4Q	---- ---	5514-5 A4Q
	(code H4R)	1	5516 A4R	---- ---	5516 A4R	---- ---	5514-5 A4R
	(code H4T)	1	5516 A4T	---- ---	5516 A4T	---- ---	5514-5 A4T
	Push-Nut	2	6024 203	---- ---	---- ---	---- ---	6024 203
	Screw (back to cushion wedge spring adjusting)	2	---- ---	---- ---	---- ---	6016 005	6016 005
	Nut (spring attaching)	6	---- ---	---- ---	---- ---	6000 234	6000 234
23-108-15	SPRING and COVER, Front Seat Back						
	V1-P, V2-P						
	(code P4B)	2	---- ---	---- ---	---- ---	*5701 A4B	*5701 A4B
	(code P4R)	2	---- ---	---- ---	---- ---	*5701 V5R	*5701 V5R
	(code P4X)	2	---- ---	---- ---	---- ---	*5701 V5X	*5701 V5X
	(code P4Y)	2	---- ---	---- ---	---- ---	*5701 V5Y	*5701 V5Y

★ Indicates use as required.
⊟ Indicates parts not listed in any previous parts book.
Right and left part numbers are on same line, first number is right, second number is left.
• Indicates change or addition.

MyMopar.com

Printed in U.S.A.
Prices and specifications subject to change without notice.
April 1966, Supersedes May 1965.

CODE	REMARKS	PER CAR	SED.	4D H.T	STA. WGN.	2D H.T	CV. CP.
23-108-16	COVER, Front Seat Back						
	V1-H, V2-H (2 D.)						
	(code H1B)	1	5904-5 A1B				
	(code H1Q)	1	5904-5 A1Q				
	(code H1R)	1	5904-5 A1R				
	(code H1T)	1	5904-5 A1T				
	V1-L, V2-L (2 D.)						
	(code L4B)	1	5902-3 A4B	---- ---	---- ---	5902-3 A4B	
	(code L4R)	1	5902-3 A4R	---- ---	---- ---	5902-3 A4R	
	(code L4T)	1	5902-3 A4T	---- ---	---- ---	5902-3 A4T	
	V1-H, V2-H (4 D.)						
	(code H1B)	1	5901 A1B	---- ---	5901 A1B		
	(code H1Q)	1	5901 A1Q	---- ---	5901 A1Q		
	(code H1R)	1	5901 A1R	---- ---	5901 A1R		
	(code H1T)	1	5901 A1T	---- ---	5901 A1T		
	V1-L, V2-L (4 D.)						
	(code L4B)	1	5907 A4B	---- ---	5907 A4B		
	(code L4R)	1	5907 A4R	---- ---	5907 A4R		
	(code L4T)	1	5907 A4T	---- ---	5907 A4T		
	V1-H, V2-H						
	(code H4B)	1	5910 A4B	---- ---	5910 A4B	---- ---	5908-9 A4B
	(code H4Q)	1	5910 A4Q	---- ---	5910 A4Q	---- ---	5908-9 A4Q
	(code H4R)	1	5910 A4R	---- ---	5910 A4R	---- ---	5908-9 A4R
	(code H4T)	1	5910 A4T	---- ---	5910 A4T	---- ---	5908-9 A4T
	V1-P, V2-P						
	(code P4B)	1	---- ---	---- ---	---- ---	5911 A4B	5911 A4B
	(code P4R)	1	---- ---	---- ---	---- ---	5911 V5R	5911 V5R
	(code P4X)	1	---- ---	---- ---	---- ---	5911 V5X	5911 V5X
	(code P4Y)	1	---- ---	---- ---	---- ---	5911 V5Y	5911 V5Y
23-108-32	PANEL or INSERT, Back of Front Seat Back						
	V1-P, V2-P						
	(code P4B)				-- ---	6102 A4B	6102 A4B
	(code P4R)	2	---- ---	---- ---	---- ---	6102 V5R	6102 V5R
	(code P4X)	2	---- ---	---- ---	---- ---	6102 V5X	6102 V5X
	(code P4Y)	2	---- ---	---- ---	---- ---	6102 V5Y	6102 V5Y
23-108-84	COVER, Front Seat Back Outer Hinge Arm						
	V1, V2 (2 D.)						
	(paint as required)						
	(codes H1R, H4R, H1T, H4T)	1	---- ---	*4326 BT6	---- ---	*4326 BT6	*4326 BT6
	V1-P, V2-P						
	(cushion on frame to back hinge post)	4	---- ---	---- ---	---- ---	4390 VT6	4390 VT6
23-108-98	SHIELD, Front Seat Side						
	V1-P, V2-P						
	(back frame)	4	---- ---	---- ---	---- ---	2440 219	2440 219
	(cushion side)	2	---- ---	---- ---	---- ---	2440 340	2440 340
23-109-3	BACK, Rear Seat						
	V1-L, V2-L						
	(std. springs)						
	(code L4B)	1	6500 A4B				
	(code L4R)	1	6500 A4R				
	(code L4T)	1	6500 A4T				

★ Indicates use as required.
⊟ Indicates parts not listed in any previous parts book.
April 1966, Supersedes May 1965.

Printed in U.S.A.
Prices and specifications subject to change without notice.
Right and left part numbers are on same line, first number is right, second number is left.
* Indicates change or addition.

MyMopar.com

CODE	REMARKS	PER CAR	SED.	4D H.T	STA. WGN.	2D H.T	CV. CP.
23-109-3	BACK, Rear Seat - Cont'd						
	V1-L, V2-L (heavy duty springs)						
	(code L4B)	1	6501 A4B				
	(code L4R)	1	6501 A4R				
	(code L4T)	1	6501 A4T				
	V1-L, V2-L (2nd. seat) (spring and cover)						
	(code L4B)	1	---- ---	---- ---	6505 A4B		
	(code L4R)	1	---- ---	---- ---	6505 A4R		
	(code L4T)	1	---- ---	---- ---	6505 A4T		
	V1-H, V2-H (2nd. seat) (spring and cover)						
	(code H1B)	1	6502 A1B	---- ---	6510 A1B		
	(code H1Q)	1	6502 A1Q	---- ---	6510 A1Q		
	(code H1R)	1	6502 A1R	---- ---	6510 A1R		
	(code H1T)	1	6502 A1T	---- ---	6510 A1T		
	(code H4B)	1	6506 A4B	---- ---	6507 A4B	---- ---	6512 A4B
	(code H4Q)	1	6506 A4Q	---- ---	6507 A4Q	---- ---	6512 A4Q
	(code H4R)	1	6506 A4R	---- ---	6507 A4R	---- ---	6512 A4R
	(code H4T)	1	6506 A4T	---- ---	6507 A4T	---- ---	6512 A4T
	Nut (spring attaching)	2	---- ---	---- ---	6000 234	----	
	V1-P, V2-P						
	(code P4B)	1	---- ---	---- ---	---- ---	⊟6503 A4B	
	(code P4R)	1	---- ---	---- ---	---- ---	⊟6503 A4R	
	(code P4X)	1	---- ---	---- ---	---- ---	⊟6503 A4X	
	(code P4Y)	1	---- ---	---- ---	---- ---	⊟6503 A4Y	
	(Barracuda)						
	(code P4B)	1	---- ---	---- ---	---- ---	*6514 A4B	*6511 A4B
	(code P4X)	1	---- ---	---- ---	---- ---	6514 A5X	6511 A4X
	(code P4R)	1	---- ---	---- ---	---- ---	6514 V5R	6511 A4R
	(code P4Y)	1	---- ---	---- ---	---- ---	6514 V5Y	6511 A4Y
23-109-4	COVER, Rear Seat Back						
	V1-L, V2-L (2nd. seat)						
	(code L4B)	1	6700 A4B	---- ---	6704 A4B	6700 A4B	
	(code L4R)	1	6700 A4R	---- ---	6704 A4R	6700 A4R	
	(code L4T)	1	6700 A4T	---- ---	6704 A4T	6700 A4T	
	V1-H, V2-H (2nd. seat)						
	(code H1B)	1	6701 A1B	---- ---	6708 A1B		
	(code H1Q)	1	6701 A1Q	---- ---	6708 A1Q		
	(code H1R)	1	6701 A1R	---- ---	6708 A1R		
	(code H1T)	1	6701 A1T	---- ---	6708 A1T		
	(code H4B)	1	6705 A4B	---- ---	6706 A4B	---- ---	6710 A4B
	(code H4Q)	1	6705 A4Q	---- ---	6706 A4Q	---- ---	6710 A4Q
	(code H4R)	1	6705 A4R	---- ---	6706 A4R	---- ---	6710 A4R
	(code H4T)	1	6705 A4T	---- ---	6706 A4T	---- ---	6710 A4T
	V1-P, V2-P						
	(code P4B)	1	---- ---	---- ---	---- ---	6702 A4B	6709 A4B
	(code P4R)	1	---- ---	---- ---	---- ---	6702 A4R	6709 A4R
	(code P4X)	1	---- ---	---- ---	---- ---	6702 A4X	6709 A4X
	(code P4Y)	1	---- ---	---- ---	---- ---	6702 A4Y	6709 A4Y
	(Barracuda)						
	(code P4B)	1	---- ---	---- ---	---- ---	6715 A4B	
	(code P4R)	1	---- ---	---- ---	---- ---	6715 V5R	
	(code P4X)	1	---- ---	---- ---	---- ---	6715 V5X	
	(code P4Y)	1	---- ---	---- ---	---- ---	6715 V5Y	

★ Indicates use as required.
⊟ Indicates parts not listed in any previous parts book.
Right and left part numbers are on same line, first number is right, second number is left.
• Indicates change or addition.

MyMopar.com

Printed in U.S.A.
Prices and specifications subject to change without notice.
May 1965, Supersedes Sept. 4, 1964.

CODE	REMARKS	PER CAR	SED.	4D H.T	STA. WGN.	2D H.T	CV. CP.
23-109-6	FOUNDATION, Back of Rear Seat Back						
	V1, V2 (paint as required)	1	---- ---	---- ---	---- ---	---- ---	⊟4410 AX9
	Fastener	10	---- ---	---- ---	---- ---	---- ---	6000 365
	(Barracuda) (foundation w/carpet)						
	(code P4B)	1	---- ---	---- ---	---- ---	*4859 VB8	
	(code P4R)	1	---- ---	---- ---	---- ---	*4859 VR6	
	(code P4X)	1	---- ---	---- ---	---- ---	⊟4859 AX8	
	(code P4Y)	1	---- ---	---- ---	---- ---	*4859 VY8	
23-109-35	CUSHION, Rear Seat						
	V1-L, V2-L (2nd. seat)						
	(code L4B)	1	6200 A4B	---- ---	6210 A4B	6200 A4B	
	(code L4R)	1	6200 A4R	---- ---	6210 A4R	6200 A4R	
	(code L4T)	1	6200 A4T	---- ---	6210 A4T	6200 A4T	
	V1-H, V2-H (2nd. seat)						
	(code H1B)	1	6204 A1B	---- ---	6205 A1B		
	(code H1Q)	1	6204 A1Q	---- ---	6205 A1Q		
	(code H1R)	1	6204 A1R	---- ---	6205 A1R		
	(code H1T)	1	6204 A1T	---- ---	6205 A1T		
	(code H4B)	1	6211 A4B	---- ---	6213 A4B	---- ---	6214 A4B
	(code H4Q)	1	6211 A4Q	---- ---	6213 A4Q	---- ---	6214 A4Q
	(code H4R)	1	6211 A4R	---- ---	6213 A4R	---- ---	6214 A4R
	(code H4T)	1	6211 A4T	---- ---	6213 A4T	---- ---	6214 A4T
	V1-P, V2-P						
	(code P4B)	1	---- ---	---- ---	---- ---	6206 A4B	6208 A4B
	(code P4R)	1	---- ---	---- ---	---- ---	6206 A4R	6208 A4R
	(code P4X)	1	---- ---	---- ---	---- ---	6206 A4X	6208 A4X
	(code P4Y)	1	---- ---	---- ---	---- ---	6206 A4Y	6208 A4Y
	(Barracuda)						
	(code P4B)	1	---- ---	---- ---	---- ---	*6207 A4B	
	(code P4R)	1	---- ---	---- ---	---- ---	*6207 V5R	
	(code P4X)	1	---- ---	---- ---	---- ---	*6207 V5X	
	(code P4Y)	1	---- ---	---- ---	---- ---	*6207 V5Y	
23-109-36	COVER, Rear Seat Cushion						
	V1-L, V2-L (2nd. seat)						
	(code L4B)	1	6400 A4B	---- ---	6404 A4B	6400 A4B	
	(code L4R)	1	6400 A4R	---- ---	6404 A4R	6400 A4R	
	(code L4T)	1	6400 A4T	---- ---	6404 A4T	6400 A4T	
	V1-H, V2-H (2nd. seat)						
	(code H1B)	1	6401 A1B	---- ---	6408 A1B		
	(code H1Q)	1	6401 A1Q	---- ---	6408 A1Q		
	(code H1R)	1	6401 A1R	---- ---	6408 A1R		
	(code H1T)	1	6401 A1T	---- ---	6408 A1T		
	(code H4B)	1	6405 A4B	---- ---	6406 A4B	---- ---	6407 A4B
	(code H4Q)	1	6405 A4Q	---- ---	6406 A4Q	---- ---	6407 A4Q
	(code H4R)	1	6405 A4R	---- ---	6406 A4R	---- ---	6407 A4R
	(code H4T)	1	6405 A4T	---- ---	6406 A4T	---- ---	6407 A4T
	(code H5B)	1	6420 A5B				
	(code H5R)	1	6420 A5R				
	(code H5T)	1	6420 A5T				
	V1-P, V2-P						
	(code P4B)	1	---- ---	---- ---	---- ---	6402 A4B	6403 A4B
	(code P4R)	1	---- ---	---- ---	---- ---	6402 A4R	6403 A4R
	(code P4X)	1	---- ---	---- ---	---- ---	6402 A4X	6403 A4X
	(code P4Y)	1	---- ---	---- ---	---- ---	6402 A4Y	6403 A4Y

★ Indicates use as required.
⊟ Indicates parts not listed in any previous parts book.
May 1965, Supersedes Sept. 4, 1964.

Printed in U.S.A.
Prices and specifications subject to change without notice.
Right and left part numbers are on same line, first number is right, second number is left.
• Indicates change or addition.

MyMopar.com

CODE	REMARKS	PER CAR	SED.	4D H.T	STA. WGN.	2D H.T	CV. CP.
23-109-36	COVER, Rear Seat Cushion Cont'd						
	V1-P, V2-P (Barracuda)						
	(code P4B)	1	---- ---	---- ---	---- ---	6215 A4B	
	(code P4R)	1	---- ---	---- ---	---- ---	6215 V5R	
	(code P4X)	1	---- ---	---- ---	---- ---	6215 V5X	
	(code P4Y)	1	---- ---	---- ---	---- ---	6215 V5Y	
23-109-38	RETAINER, Center Floor Pan Rear Seat Cushion V1, V2	2	1810 037	---- ---	1810 037	1810 037	1810 037
23-109-54	STRAP, Quarter Panel Rear Seat Back Hold-Down						
	V1-P, V2-P (Barracuda)						
	(code P4B)	1	---- ---	---- ---	---- ---	4454 VB4	
	(code P4R)	1	---- ---	---- ---	---- ---	4454 VR6	
	(code P4X)	1	---- ---	---- ---	---- ---	4454 VX9	
	(code P4Y)	1	---- ---	---- ---	---- ---	4454 VY3	
23-111-37	STRIP, Folding Top Bow Tacking V1, V2						
	(No. 1 bow)	2	---- ---	---- ---	---- ---	---- ---	2424 591
	(rear bow)	1	---- ---	---- ---	---- ---	---- ---	2424 607
	(rear bow end)	2	---- ---	---- ---	---- ---	---- ---	*2573 686
23-112-4	RETAINER, Folding Top Header Top Material V1, V2	1	---- ---	---- ---	---- ---	---- ---	2424 262-3
23-112-12	BOOT, Folding Top Dust V1, V2						
	(codes H4B, P4B)	1	---- ---	---- ---	---- ---	---- ---	1954 AB4
	(code H4Q)	1	---- ---	---- ---	---- ---	---- ---	1954 AQ4
	(code P4Y)	1	---- ---	---- ---	---- ---	---- ---	1954 AY3
	(codes H4R, P4R)	1	---- ---	---- ---	---- ---	---- ---	1954 VR6
	(code H4T)	1	---- ---	---- ---	---- ---	---- ---	1954 VT6
	(code P4X)	1	---- ---	---- ---	---- ---	---- ---	1954 VX9
	Socket (dust boot to panel) (dust boot to belt moulding)	★	---- ---	---- ---	---- ---	---- ---	141 998
23-112-18	RETAINER, Rear Seat Back Dust Boot V1, V2	1	---- ---	---- ---	---- ---	---- ---	2577 275
23-112-23	COVER, Folding Top Rear Bow to Link Joint V1, V2						
	(black)	2	---- ---	---- ---	---- ---	---- ---	1968 VX9
	(white)	2	---- ---	---- ---	---- ---	---- --	1968 VW2
23-112-45	CURTAIN, Folding Top Back V1, V2						
	(blue)	1	---- ---	---- ---	---- ---	---- ---	1929 AB1
	(white)	1	---- ---	---- ---	---- ---	---- ---	1929 AW1
	(black)	1	---- ---	---- ---	---- ---	---- ---	1929 AX9
	(backlite)						
	(blue)	1	---- ---	---- ---	---- ---	---- ---	1930 AB1
	(white)	1	---- ---	---- ---	---- ---	---- ---	1930 AW1
	(black)	1	---- ---	---- ---	---- ---	---- ---	1930 AX9

★ Indicates use as required.
⊟ Indicates parts not listed in any previous parts book.
Right and left part numbers are on same line, first number is right, second number is left.
* Indicates change or addition.

Printed in U.S.A.
Prices and specifications subject to change without notice.
April 1966, Supersedes May 1965.

MyMopar.com

CODE	REMARKS	PER CAR	SED.	4D H.T	STA. WGN.	2D H.T	CV. CP.
23-112-46	ZIPPER, Folding Top Rear Curtain V1, V2 (full)						
	(white)	1	---- ---	---- ---	---- ---	---- ---	1920 VW2
	(black)	1	---- ---	---- ---	---- ---	---- ---	1920 AX8
23-112-50	TAPE, Folding Top V1, V2 (sold by the inch)						
	(side rear closure loop)	★	---- ---	---- ---	---- ---	---- ---	1933 TX8
	(rear curtain closure hook)						
	(black)	★	---- ---	---- ---	---- ---	---- ---	1934 TX8
	(white)	●	---- ---	---- ---	---- ---	---- ---	1934 VW2
23-112-70	RETAINER, Folding Top to Belt Bar V1, V2						
	(side)	1	---- ---	---- ---	---- ---	---- ---	2448 101-2
	(center)	1	---- ---	---- ---	---- ---	---- ---	2448 100
23-112-75	TIP, Wire-On Binding End V1, V2	1	---- ---	---- ---	---- ---	---- ---	*1158 976-7
23-112-88	CABLE, Rear Bow Tension V1, V2						
	(black)	2	---- ---	---- ---	---- ---	---- ---	1970 VX8
	(white)	2	---- ---	---- ---	---- ---	---- ---	1970 VW2
	(top cover)	2	---- ---	---- ---	---- ---	---- ---	2525 851
	Bolt	2	---- ---	---- ---	---- ---	---- ---	6022 169
23-112-108	DECK and SIDE QUARTER, Folding Top V1, V2						
	(blue)	1	---- ---	---- ---	---- ---	---- ---	1935 AB1
	(white)	1	---- ---	---- ---	---- ---	---- ---	1935 AW1
	(black)	1	---- ---	---- ---	---- ---	---- ---	1935 AX9
23-112-112	PAD, Folding Top Side Quarter Stay V1, V2						
	(white)	1	---- ---	---- ---	---- ---	---- ---	*1948-9 AW1
	(black)	1	---- ---	---- ---	---- ---	---- ---	*1948-9 AX9
23-112-153	WELL, Well COVER, Pocket PANEL, Pocket Panel COVER, Pocket Shelf PANEL, Folding Top V1, V2						
	(pocket panel) (codes H4B, P4B, H4Q, H4R, P4R, H4T, P4T, P4X, P4Y)	1	---- ---	---- ---	---- ---	---- ---	2010-1 AT6
	(pocket panel cover)						
	(codes H4B, P4B)	1	---- ---	---- ---	---- ---	---- ---	*2022-3 VB6
	(code H4Q)	1	---- ---	---- ---	---- ---	---- ---	*2022-3 VQ6
	(codes H4R, P4R)	1	---- ---	---- ---	---- ---	---- ---	*2022-3 VR6
	(code H4T)	1	---- ---	---- ---	---- ---	---- ---	*2022-3 VT6
	(code H4X)	1	---- ---	---- ---	---- ---	---- ---	*2022-3 VX8
	(code H4Y)	1	---- ---	---- ---	---- ---	---- ---	⊟2022-3 AY6
	(pocket panel cover) (upper inner)						
	(codes P4R, H4R)	1	---- ---	---- ---	---- ---	---- ---	2020-1 VR6
	(code P4Y)	1	---- ---	---- ---	---- ---	---- ---	2020-1 AY6
	(code H4T)	1	---- ---	---- ---	---- ---	---- ---	2020-1 VT6
	(code P4X)	1	---- ---	---- ---	---- ---	---- ---	2020-1 VX8

★ Indicates use as required.
⊟ Indicates parts not listed in any previous parts book.

MyMopar.com

Printed in U.S.A.
Prices and specifications subject to change without notice.
Right and left part numbers are on same line, first number is right, second number is left.
* Indicates change or addition.

CODE	REMARKS	PER CAR	SED.	4D H.T	STA. WGN.	2D H.T	CV. CP.
23-112-153	WELL, Well COVER, Pocket PANEL, Pocket Panel COVER, Pocket Shelf PANEL, Folding Top - Cont'd						
	V1, V2						
	(well cover)						
	(codes H4B, P4B)	1	---- ---	---- ---	---- ---	---- ---	1940 AB4
	(code H4Q)	1	---- ---	---- ---	---- ---	---- ---	1940 AQ4
	(codes H4R, P4R)	1	---- ---	---- ---	---- ---	---- ---	1940 AR6
	(code H4T)	1	---- ---	---- ---	---- ---	---- ---	1940 AT6
	(code P4X)	1	---- ---	---- ---	---- ---	---- ---	1940 AX9
	(code P4Y)	1	---- ---	---- ---	---- ---	---- ---	1940 AY3
	Cap (well cover to folding top cover)	2	---- ---	---- ---	---- ---	---- ---	6000 434
23-112-160	PAD, Folding Top Pocket Panel Arm Rest						
	V1, V2						
	(codes H4B, P4B)	1	---- ---	---- ---	---- ---	---- ---	1204-5 AB4
	(codes H4R, P4R)	1	---- ---	---- ---	---- ---	---- ---	1204-5 VR6
	(code H4Q)	1	---- ---	---- ---	---- ---	---- ---	1204-5 AQ4
	(code H4T)	1	---- ---	---- ---	---- ---	---- ---	1204-5 VT6
	(code P4X)	1	---- ---	---- ---	---- ---	---- ---	1204-5 VX9
	(code P4Y)	1	---- ---	---- ---	---- ---	---- ---	1204-5 AY3
23-113-45	WEATHERCORD, Quarter Window Opening						
	V1-L, V2-L, V1-H, V2-H (2 D.)						
	(codes L4B, H1B)	2	*1515 AB4				
	(code H1Q)	2	1515 AQ4				
	(codes L1R, L4R, H1R)	2	*1515 TR6				
	(codes L4T, H1T)	2	*1515 VT6				
23-113-52	STRIP, Windshield Lower Inside Trim						
	V1-P, V2-P						
	(code P4Y)	1	---- ---	---- ---	---- ---	*4249 AY8	*4249 AY8
	(codes H4B, P4B)	1	---- ---	---- ---	---- ---	*4249 AB8	4249 AB8
	(code H4T)	1	---- ---	---- ---	---- ---	*4249 VT8	4249 VT8
	(code H4Q)	1	---- ---	---- ---	---- ---	*4249 AQ8	4249 AQ8
	(codes P4R, H4R)	1	---- ---	---- ---	---- ---	*4249 AR9	4249 AR9
23-113-56	WEATHERCORD, Folding Top Header						
	V1, V2 (sold by the inch)						
	(blue)	1	---- ---	---- ---	---- ---	---- ---	1947 AB1
	(white)	1	---- ---	---- ---	---- ---	---- ---	1947 AW1
23-113-84	WELT, Folding Top						
	V1, V2						
	(dust boot filler, channel attaching)	★	---- ---	---- ---	---- ---	---- ---	2572 166
	(folding top header)						
	(white)	1	---- ---	---- ---	---- ---	---- ---	1945 VW2
	(black)	1	---- ---	---- ---	---- ---	---- ---	1959 VX8
23-114-10	BINDING, 5/8" Wire-On						
	V1, V2						
	(blue)	1	---- ---	---- ---	---- ---	---- ---	*1903 VB1
	(white)	1	---- ---	---- ---	---- ---	---- ---	*1903 VW1
	(black)	1	---- ---	---- ---	---- ---	---- ---	*1903 TX8
23-115-4	PUSH NUT, Front Seat Back to Cushion Mounting						
	V1-P, V2-P	4	---- ---	---- ---	---- ---	2410 102	2410 102

★ Indicates use as required.
B Indicates parts not listed in any previous parts book.
Right and left part numbers are on same line, first number is right, second number is left.
* Indicates change or addition.

Printed in U.S.A.
Prices and specifications subject to change without notice.
May 1965.

MyMopar.com

CODE	REMARKS	PER CAR	SED.	4D H.T	STA. WGN.	2D H.T	CV. CP.
23-115-6	PIN, Front Seat Back Frame to Cushion Frame V1-P, V2-P	4	---- ---	---- ---	---- ---	2410 054	2410 054
	Clip (frt. seat back outer hinge arm cover	2	*2160 974	---- ---	---- ---	*2160 974	*2160 974

NOTES

★ Indicates use as required.
B Indicates parts not listed in any previous parts book.
May 1965.

Printed in U.S.A.
Prices and specifications subject to change without notice.
Right and left part numbers are on same line, first number is right, second number is left.
• Indicates change or addition.

MyMopar.com

1965 DODGE

INTERIOR TRIM

HOW TO USE INTERIOR TRIM ILLUSTRATIONS

The illustrations in this section are actual and each body style showing the Interior Trim is included.

The letters shown on the illustration indicate the description of the part and the part type code when referred to the legend which appears preceding the listing of the parts. The letters are consistent throughout the illustrations as "A" is always a Door Trim Panel, Code 23-92-5.

The numbers on the illustration indicate the distribution of material and type of material used. The numbers may vary with each illustration. The legend appears on the illustration.

Appearing throughout this section are part numbers containing both letters and numbers. These are good serviceable part numbers. The combination of letters and numbers merely indicates the parts are keyed to the interior color of the vehicles on which they are used.

For complete information on "How to Order" Trim Parts, see Master Parts Price List.

MyMopar.com

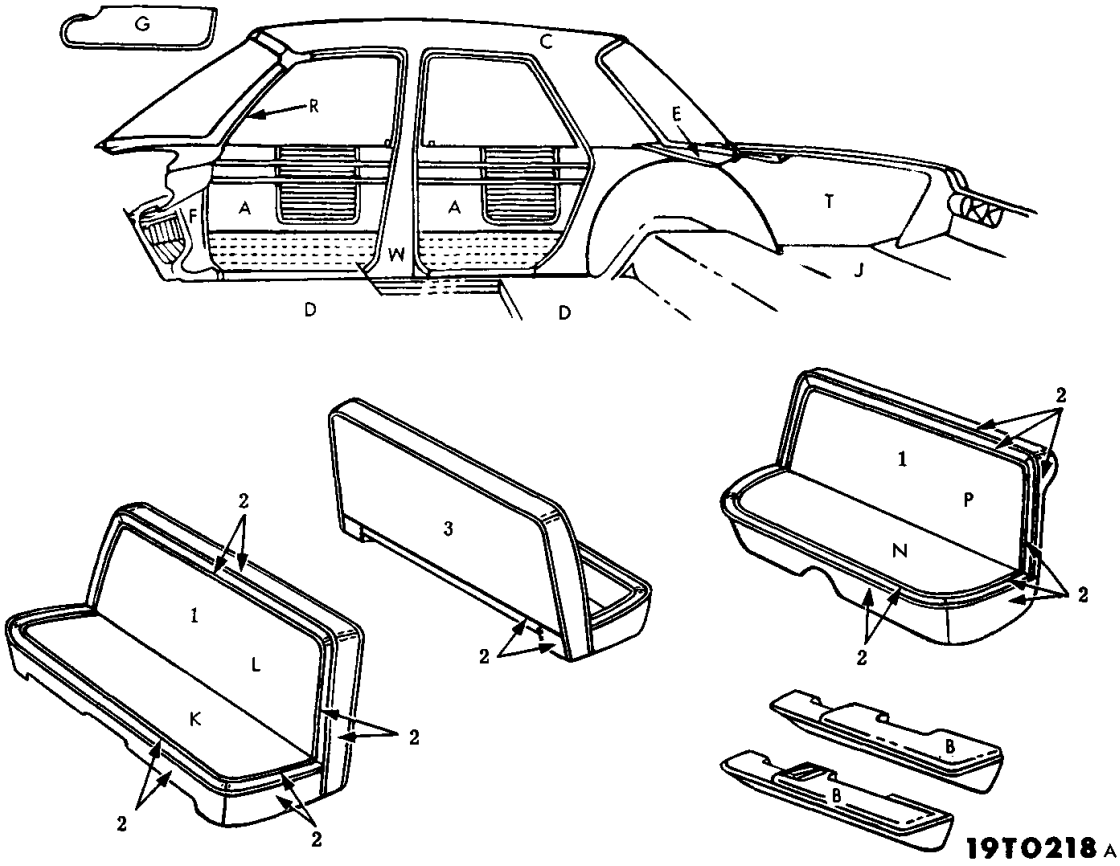

ITEM	TYPE OF MATERIAL	PART TYPE CODE	MAT'L WIDTH	PART NUMBERS AND COLORS BLUE	TURQUOISE	RED	TAN
1	Body Cloth	23-114-2	67"	0108 ABB	0108 AQQ	0108 ARR	0108 ATT
2	Vinyl 35.5 oz.	23-114-15	54"	0441 AB4	0441 AQ4	0441 VR7	0441 VT6
3	Vinyl 20 oz.	23-114-15	56"	*0478 AB4	*0478 AQ4	*0478 AR7	*0478 AT6

ITEM	TYPE OF MATERIAL	PART TYPE CODE	MAT'L WIDTH	PART NUMBERS AND COLORS GOLD			
1	Body Cloth	23-114-2	67"	0108 AYY			
2	Vinyl 35.5 oz.	23-114-15	54"	0441 AY3			
3	Vinyl 20 oz.	23-114-15	56"	*0478 AY3			

Distribution Drawing Legend Page Appears Following Illustration Section

TYPE "A"
1965 DODGE D2-L 4 DOOR SEDAN
CLOTH AND VINYL TRIM
CODES L1B, K1B, L1Q, K1Q, L1R, K1R, L1T, K1T, L1Y, K1Y

★ Indicates use as required.
Ⓑ Indicates parts not listed in any previous parts book.
May 1965, Supersedes Sept. 4, 1964.

MyMopar.com

Printed in U.S.A.
Prices and specifications subject to change without notice.
* Indicates change or addition.

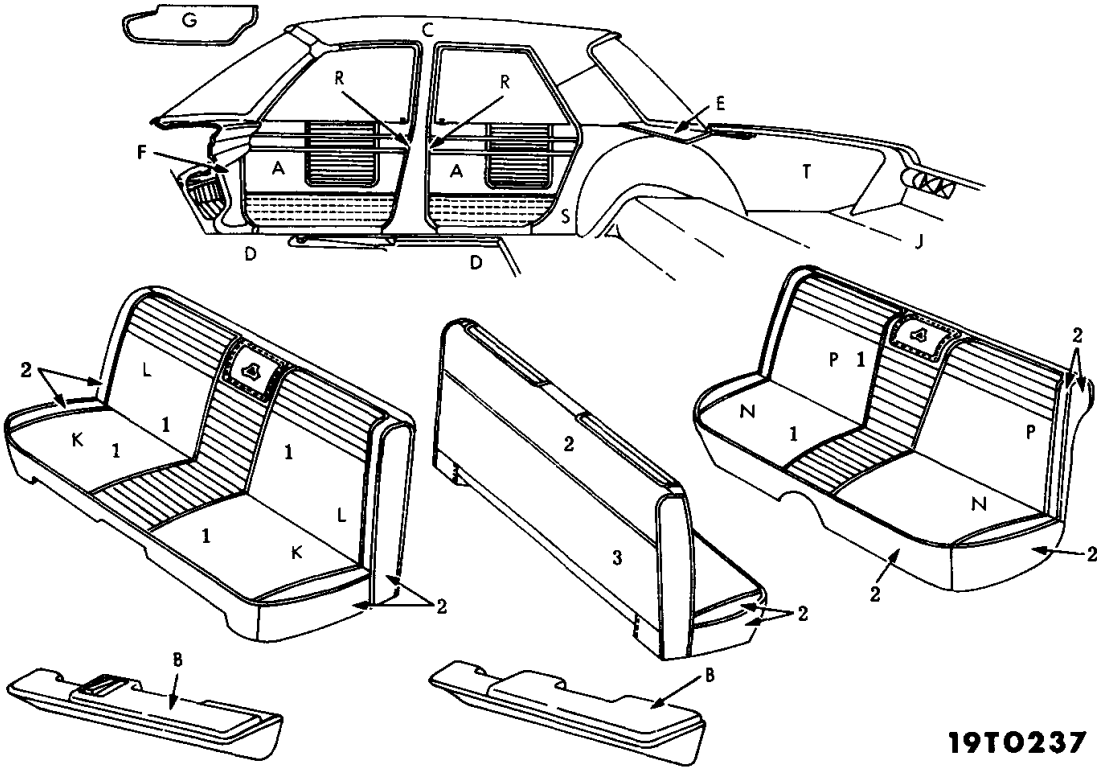

ITEM	TYPE OF MATERIAL	PART TYPE CODE	MAT'L WIDTH	PART NUMBERS AND COLORS BLUE	TURQUOISE	RED	TAN
1	Body Cloth	23-114-2	67"	*0109 ABB	*0109 AQQ	*0109 ARR	*0109 ATT
2	Vinyl 35. 5 oz.	23-114-15	54"	*0441 AB4	*0441 AQ4	*0441 VR7	*0441 VT6
3	Vinyl 20 oz.	23-114-15	56"	*0478 AB4	*0478 AQ4	*0478 AR7	*0478 AT6

ITEM	TYPE OF MATERIAL	PART TYPE CODE	MAT'L WIDTH	PART NUMBERS AND COLORS GOLD			
1	Body Cloth	23-114-2	67"	*0109 AYY			
2	Vinyl 35. 5 oz.	23-114-15	54"	*0441 AY3			
3	Vinyl 20 oz.	23-114-15	56"	*0478 AY3			

Distribution Drawing Legend Appears Following Illustration Section

TYPE "B"
1965 DODGE D2-L 4 DOOR SEDAN
CLOTH AND VINYL TRIM
CODES L1B, K1B, L1Q, K1Q, L1R, K1R, L1T, K1T, L1Y, K1Y

MyMopar.com

NOTES

★ Indicates use as required.
⊟ Indicates parts not listed in any previous parts book.
May 1965.

Printed in U.S.A.
Prices and specifications subject to change without notice

MyMopar.com

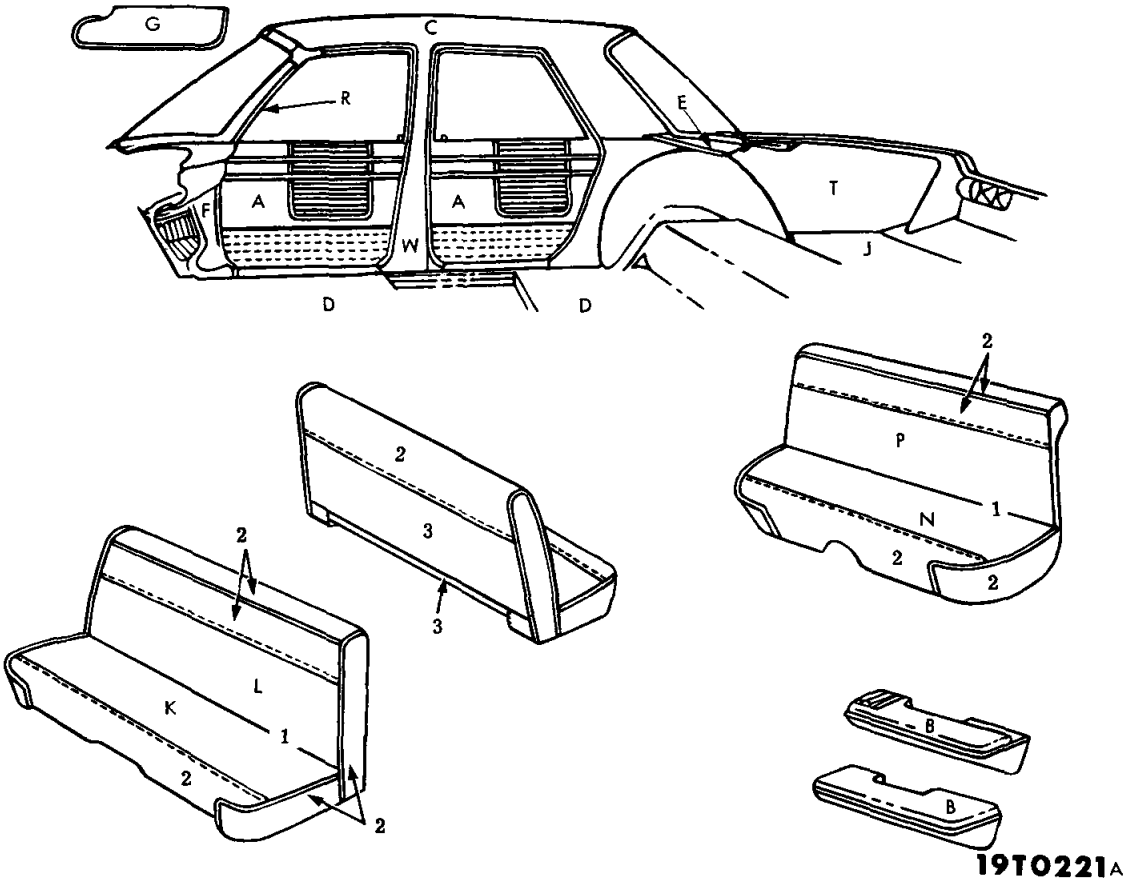

ITEM	TYPE OF MATERIAL	PART TYPE CODE	MAT'L WIDTH	PART NUMBERS AND COLORS TAN			
1	Body Cloth	23-114-2	52"	0104 ATT			
2	Vinyl 35.5 oz.	23-114-15	54"	0441 VT6			
3	Vinyl 35.5 oz.	23-114-15	54"	0441 VT8			

Distribution Drawing Legend Page Appears Following Illustration Section

1965 DODGE D2-L 4 DOOR SEDAN
CLOTH AND VINYL TRIM
·CODES L2T, K2T

MyMopar.com

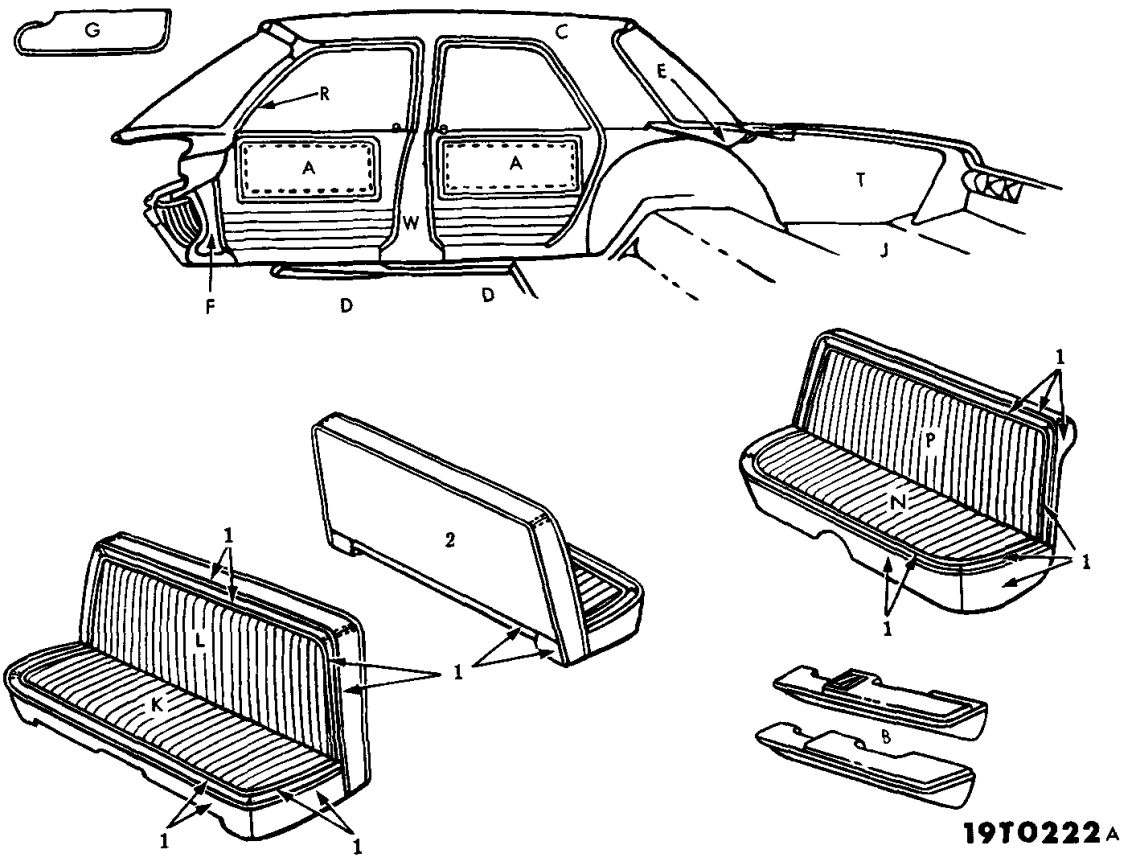

ITEM	TYPE OF MATERIAL	PART TYPE CODE	MAT'L WIDTH	PART NUMBERS AND COLORS BLUE	RED	TAN	
1	Vinyl 35.5 oz.	23-114-15	54"	*0441 AB4	*0441 VR7	*0441 VT6	
2	Vinyl 20 oz.	23-114-15	56"	*0478 AB4	*0478 AR7	*0478 AT6	

Distribution Drawing Legend Page Appears Following Illustration Section

1965 DODGE D2-L 4 DOOR SEDAN
VINYL TRIM
CODES L5B, L5R, L5T

★ Indicates use as required.
B Indicates parts not listed in any previous parts book.
May 1965, Supersedes Sept. 4, 1964.

MyMopar.com
Prices and specifications subject to change without notice.
Printed in U.S.A.
• Indicates change or addition.

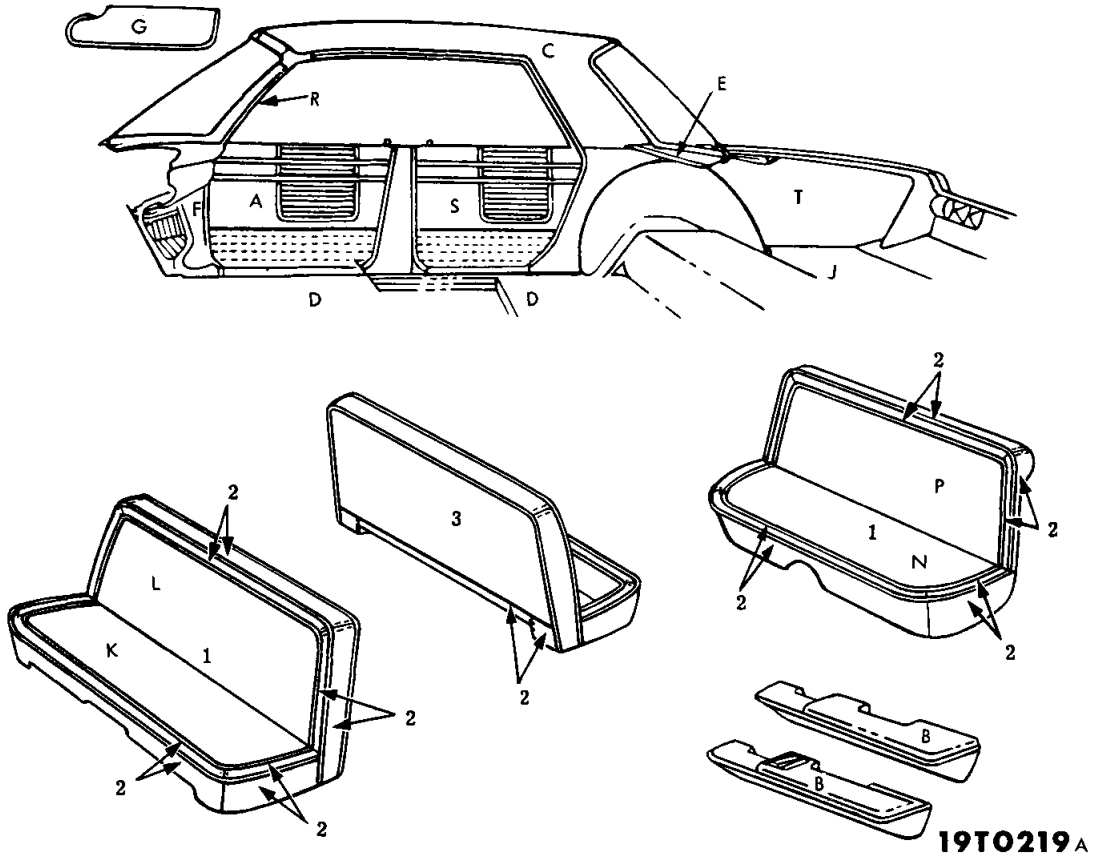

ITEM	TYPE OF MATERIAL	PART TYPE CODE	MAT'L WIDTH	PART NUMBERS AND COLORS BLUE	TURQUOISE	RED	TAN
1	Body Cloth	24-114-2	67"	0108 ABB	0108 AQQ	0108 ARR	0108 ATT
2	Vinyl 35.5 oz.	23-114-15	54"	0441 AB4	0441 AQ4	0441 VR7	0441 VT6
3	Vinyl 20 oz.	23-114-15	56"	0478 AB4	0478 AQ4	0478 AR7	0478 AT6

ITEM	TYPE OF MATERIAL	PART TYPE CODE	MAT'L WIDTH	PART NUMBERS AND COLORS GOLD			
1	Body Cloth	24-114-2	67"	0108 AYY			
2	Vinyl 35.5 oz.	23-114-15	54"	0441 AY3			
3	Vinyl 20 oz.	23-114-15	56"	0478 AY3			

Distribution Drawing Legend Page Appears Following Illustration Section

TYPE "A"
1965 DODGE D2-L 4 DOOR HARD TOP
CLOTH AND VINYL TRIM
CODES L1B, K1B, L1Q, K1Q, L1R, K1R, L1T, K1T, L1Y, K1Y

MyMopar.com

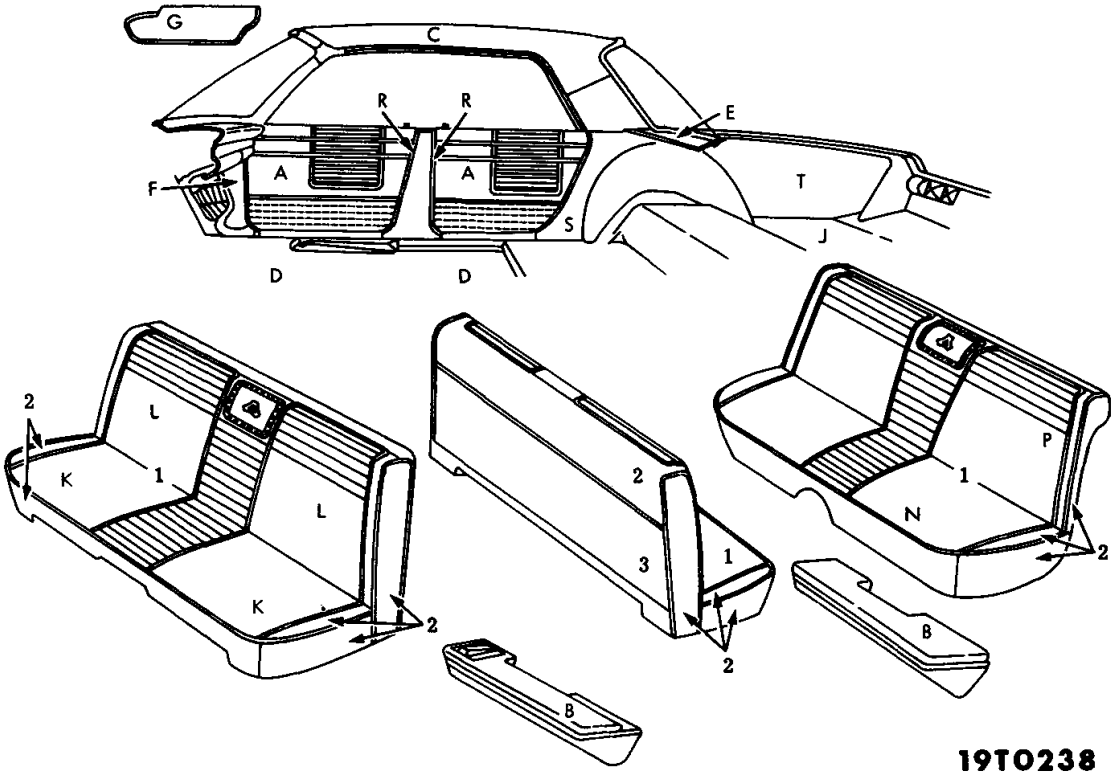

ITEM	TYPE OF MATERIAL	PART TYPE CODE	MAT'L WIDTH	PART NUMBERS AND COLORS BLUE	TURQUOISE	RED	TAN
1	Body Cloth	23-114-2	67"	*0109 ABB	*0109 AQQ	*0109 ARR	*0109 ATT
2	Vinyl 35.5 oz.	23-114-15	54"	*0441 AB4	*0441 AQ4	*0441 VR7	*0441 VT6
3	Vinyl 20 oz.	23-114-15	56"	*0478 AB4	*0478 AQ4	*0478 AR7	*0478 AT6

ITEM	TYPE OF MATERIAL	PART TYPE CODE	MAT'L WIDTH	PART NUMBERS AND COLORS GOLD			
1	Body Cloth	23-114-2	67"	*0109 AYY			
2	Vinyl 35.5 oz.	23-114-15	54"	*0441 AY3			
3	Vinyl 20 oz.	23-114-15	56"	*0478 AY3			

Distribution Drawing Legend Appears Following Illustration Section

TYPE "B"
1965 DODGE D2-L 4 DOOR HARD TOP
CLOTH AND VINYL TRIM
CODES L1B, K1B, L1Q, K1Q, L1R, K1R, L1T, K1T, L1Y, K1Y

★ Indicates use as required.
⊟ Indicates parts not listed in any previous parts book.
May 1965.

MyMopar.com

Printed in U.S.A.
Prices and specifications subject to change without notice.
• Indicates change or addition.

NOTES

★ Indicates use as required.
⊟ Indicates parts not listed in any previous parts book.

Printed in U.S.A.
Prices and specifications subject to change without notice.
May 1965.

MyMopar.com

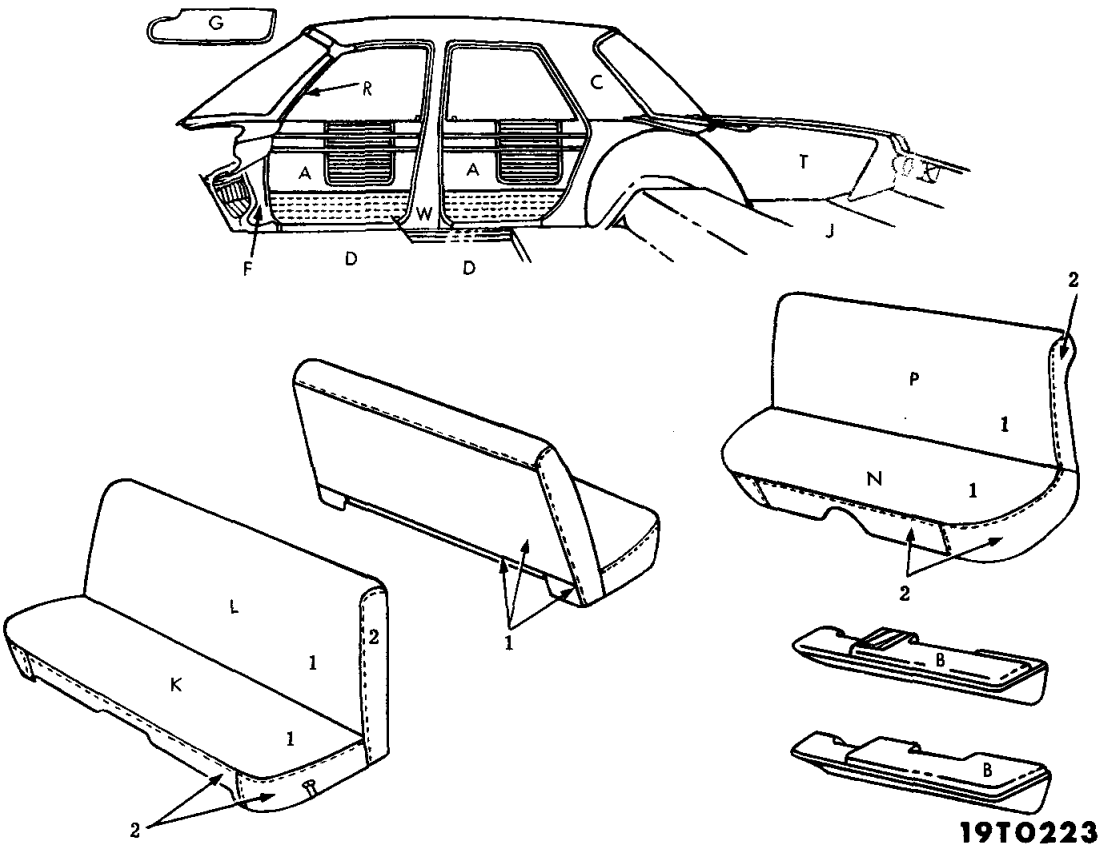

ITEM	TYPE OF MATERIAL	PART TYPE CODE	MAT'L WIDTH	PART NUMBERS AND COLORS: TAN			
1	Vinyl 37 oz.	23-114-15	50″	⊟0445 AT8			
2	Vinyl 35.5 oz.	23-114-15	54″	0441 VT8			

Distribution Drawing Legend Page Appears Following Illustration Section

1965 DODGE D2-L 4 DOOR SEDAN
VINYL TRIM
CODES L8T, K8T

★ Indicates use as required.
⊟ Indicates parts not listed in any previous parts book.
September 4, 1964.

MyMopar.com

Prices and specifications subject to change without notice.
Printed in U.S.A.

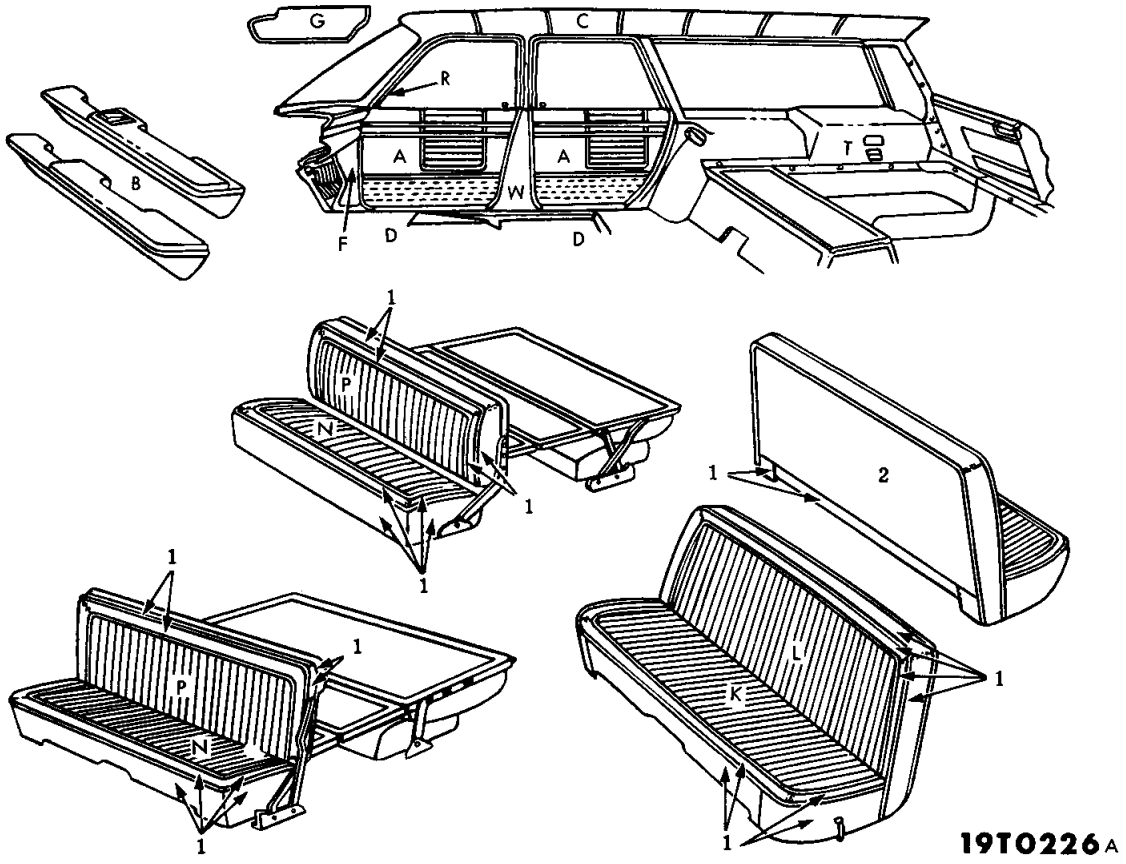

ITEM	TYPE OF MATERIAL	PART TYPE CODE	MAT'L WIDTH	PART NUMBERS AND COLORS BLUE	TURQUOISE	RED	TAN
1	Vinyl 35.5 oz.	23-114-15	54"	*0441 AB4	*0441 AQ4	*0441 VR7	*0441 VT6
2	Vinyl 20 oz.	23-114-15	56"	*0478 AB4	*0478 AQ4	*0478 AR7	*0478 AT6

ITEM	TYPE OF MATERIAL	PART TYPE CODE	MAT'L WIDTH	PART NUMBERS AND COLORS GOLD			
1	Vinyl 35.5 oz.	23-114-15	54"	*0441 AY3			
2	Vinyl 20 oz.	23-114-15	56"	*0478 AY3			

Distribution Drawing Legend Page Appears Following Illustration Section

1965 DODGE D2-L STATION WAGON
VINYL TRIM
CODES L4B, L4Q, L4R, L4T, L4Y

MyMopar.com

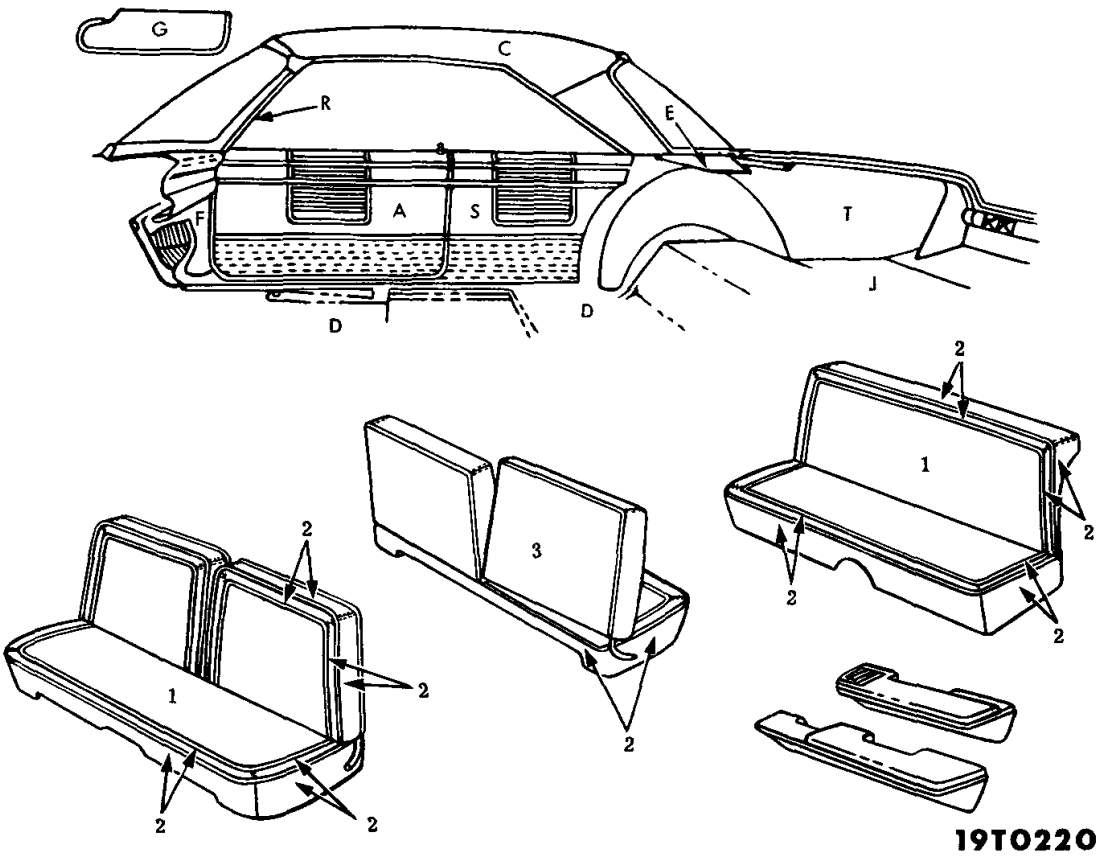

ITEM	TYPE OF MATERIAL	PART TYPE CODE	MAT'L WIDTH	PART NUMBERS AND COLORS BLUE	TURQUOISE	RED	TAN
1	Body Cloth	23-114-2	67"	0108 ABB	0108 AQQ	0108 ARR	0108 ATT
2	Vinyl 35.5 oz.	23-114-15	54"	0441 AB4	0441 AQ4	0441 VR7	0441 VT6
3	Vinyl 20 oz.	23-114-15	56"	*0478 AB4	*0478 AQ4	*0478 AR7	*0478 AT6

ITEM	TYPE OF MATERIAL	PART TYPE CODE	MAT'L WIDTH	PART NUMBERS AND COLORS GOLD			
1	Body Cloth	23-114-2	67"	0108 AYY			
2	Vinyl 35.5 oz.	23-114-15	54"	0441 AY3			
3	Vinyl 20 oz.	23-114-15	56"	*0478 AY3			

Distribution Drawing Legend Page Appears Following Illustration Section

TYPE "A"
1965 DODGE D2-L 2 DOOR HARD TOP
CLOTH AND VINYL TRIM
CODES L1B, K1B, L1Q, K1Q, L1R, K1R, L1T, K1T, L1Y, K1Y

MyMopar.com

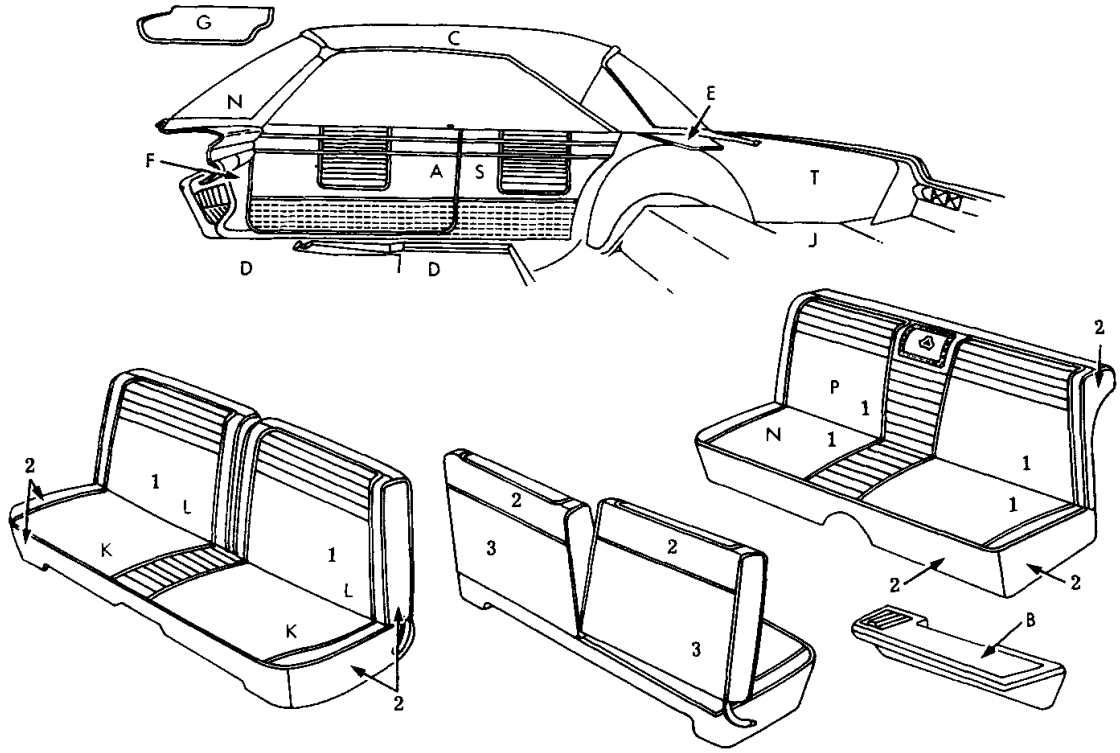

ITEM	TYPE OF MATERIAL	PART TYPE CODE	MAT'L WIDTH	PART NUMBERS AND COLORS BLUE	TURQUOISE	RED	TAN
1	Body Cloth	23-114-2	67"	*0109 ABB	*0109 AQQ	*0109 ARR	*0109 ATT
2	Vinyl 35.5 oz.	23-114-15	54"	*0441 AB4	*0441 AQ4	*0441 VR7	*0441 VT6
3	Vinyl 20 oz.	23-114-15	56"	*0478 AB4	*0478 AQ4	*0478 AR7	*0478 AT6

ITEM	TYPE OF MATERIAL	PART TYPE CODE	MAT'L WIDTH	PART NUMBERS AND COLORS GOLD			
1	Body Cloth	23-114-2	67"	*0109 AYY			
2	Vinyl 35.5 oz.	23-114-15	54"	*0441 AY3			
3	Vinyl 20 oz.	23-114-15	56"	*0478 AY3			

Distribution Drawing Legend Appears Following Illustration Section

TYPE "B"
1965 DODGE D2-L 2 DOOR HARD TOP
CLOTH AND VINYL TRIM
CODES L1B, K1B, L1Q, K1Q, L1R, K1R, L1T, K1T, L1Y, K1Y

● Indicates use as required.
Θ Indicates parts not listed in any previous parts book.
* Indicates change or addition.

MyMopar.com

Printed in U.S.A.
Prices and specifications subject to change without notice.
May 1965.

NOTES

★ Indicates use as required.
⊟ Indicates parts not listed in any previous parts book.

Printed in U.S.A.
Prices and specifications subject to change without notice.

MyMopar.com

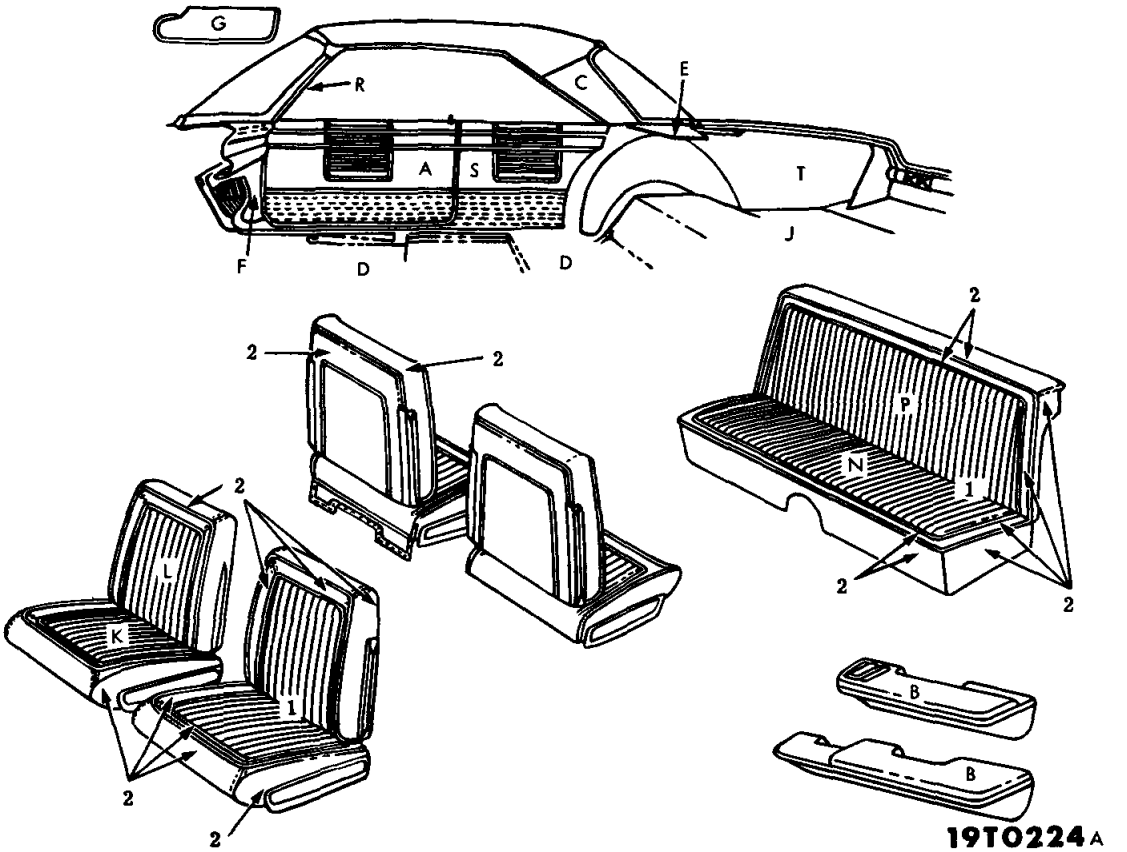

ITEM	TYPE OF MATERIAL	PART TYPE CODE	MAT'L WIDTH	PART NUMBERS AND COLORS BLUE	RED	BLACK	
1	Vinyl	23-114-15		Not Serviced			
2	Vinyl 35.5 oz.	23-114-15	54"	0441 AB4	0441 VR7	0441 VX9	

Distribution Drawing Legend Page Appears Following Illustration Section

1965 DODGE D2-L 2 DOOR HARDTOP
VINYL TRIM
CODES L9B, L9R, L9X

MyMopar.com

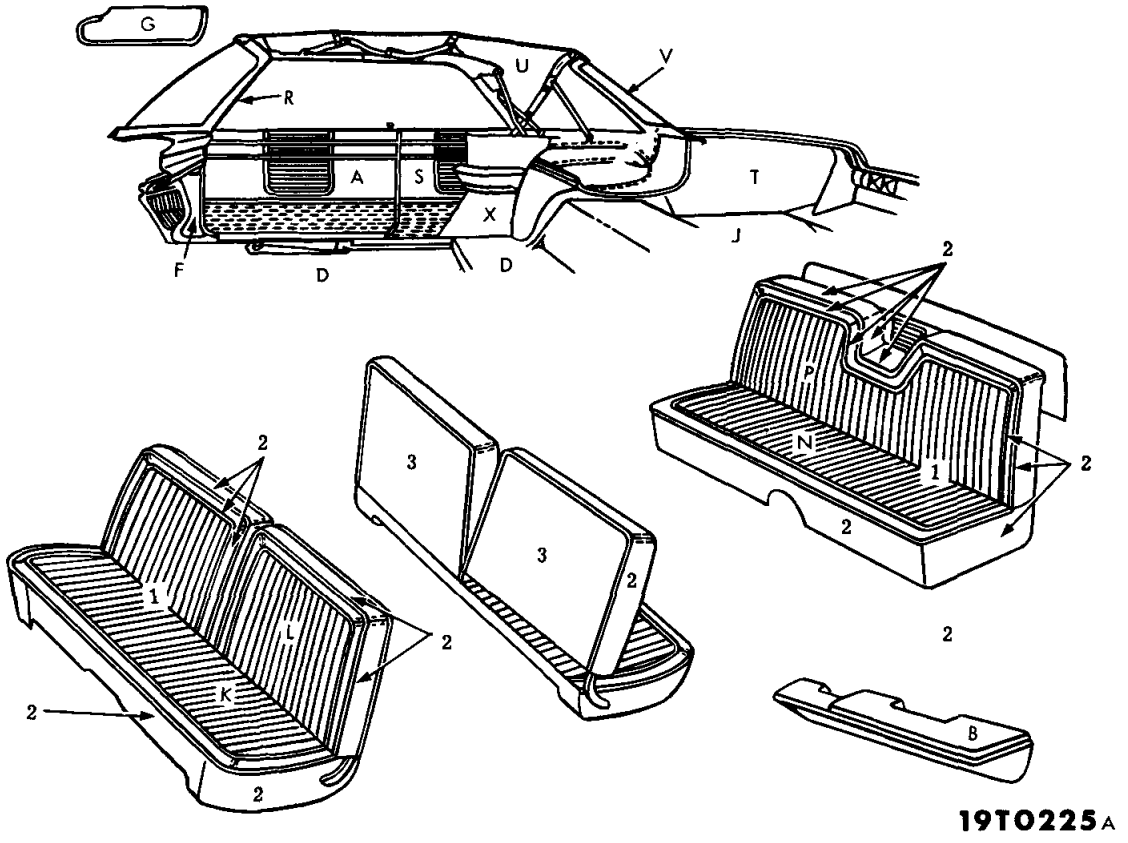

ITEM	TYPE OF MATERIAL	PART TYPE CODE	MAT'L WIDTH	PART NUMBERS AND COLORS BLUE	TURQUOISE	RED	TAN
1	Vinyl	23-114-15		Not Serviced			
2	Vinyl 35.5 oz.	23-114-15	54″	⊟0441 AB4	⊟0441 AQ4	0441 VR7	0441 VT6
3	Vinyl 20 oz.	23-114-15	56″	⊟0478 AB4	⊟0478 AQ4	⊟0478 AR7	⊟0478 AT6

ITEM	TYPE OF MATERIAL	PART TYPE CODE	MAT'L WIDTH	PART NUMBERS AND COLORS GOLD			
2	Vinyl 35.5 oz.	23-114-15	54″	⊟0441 AY3			
3	Vinyl 20 oz.	23-114-15	56″	⊟0478 AY3			

Distribution Drawing Legend Page Appears Following Illustration Section

1965 DODGE D2-L CONVERTIBLE
VINYL TRIM
CODES L4B, L4Q, L4R, L4T, L4Y

★ Indicates use as required.
⊟ Indicates parts not listed in any previous parts book.
May 1965, Supersedes Sept. 4, 1964.

Prices and specifications subject to change without notice.
Printed in U.S.A.
MyMopar.com

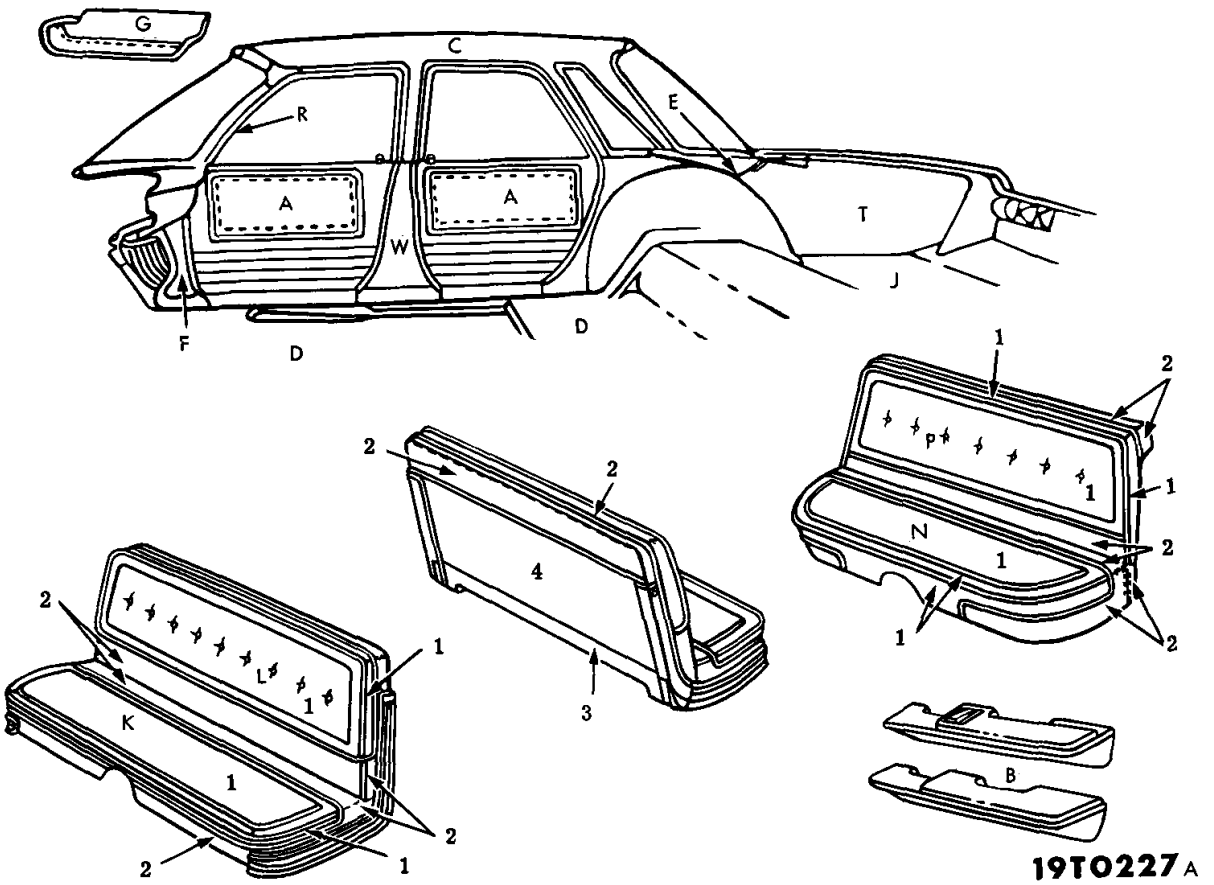

ITEM	TYPE OF MATERIAL	PART TYPE CODE	MAT'L WIDTH	PART NUMBERS AND COLORS BLUE	TURQUOISE	RED	TAN
1	Body Cloth	23-114-2	66″	0110 AB8	0110 AQ8	0110 AR8	0110 AT8
2	Vinyl 35.5 oz.	23-114-15	54″	0441 AB4	0441 AQ4	0441 VR7	0441 VT6
3	Vinyl 35.5 oz.	23-114-15	54″	0441 AB8	0441 AQ8	0441 AR8	0441 VT8
4	Vinyl 20 oz.	23-114-15	56″	0488 AB8	0488 AQ8	0488 AR8	0488 AT8

ITEM	TYPE OF MATERIAL	PART TYPE CODE	MAT'L WIDTH	PART NUMBERS AND COLORS GOLD			
1	Body Cloth	23-114-2	66″	*0110 AY8			
2	Vinyl 35.5 oz.	23-114-15	54″	0441 AY3			
3	Vinyl 35.5 oz.	23-114-15	54″	0441 AY8			
4	Vinyl 20 oz.	23-114-15	56″	0488 AY8			

Distribution Drawing Legend Page Appears Following Illustration Section

1965 DODGE D2-H 4 DOOR (6 WINDOW) SEDAN
VINYL TRIM
CODES H1B, H1Q, H1R, H1T, H1Y

★ Indicates use as required.
B Indicates parts not listed in any previous parts book.
● Indicates change or addition.

MyMopar.com

Printed in U.S.A.
Prices and specifications subject to change without notice.
April 1966, Supersedes May 1965.

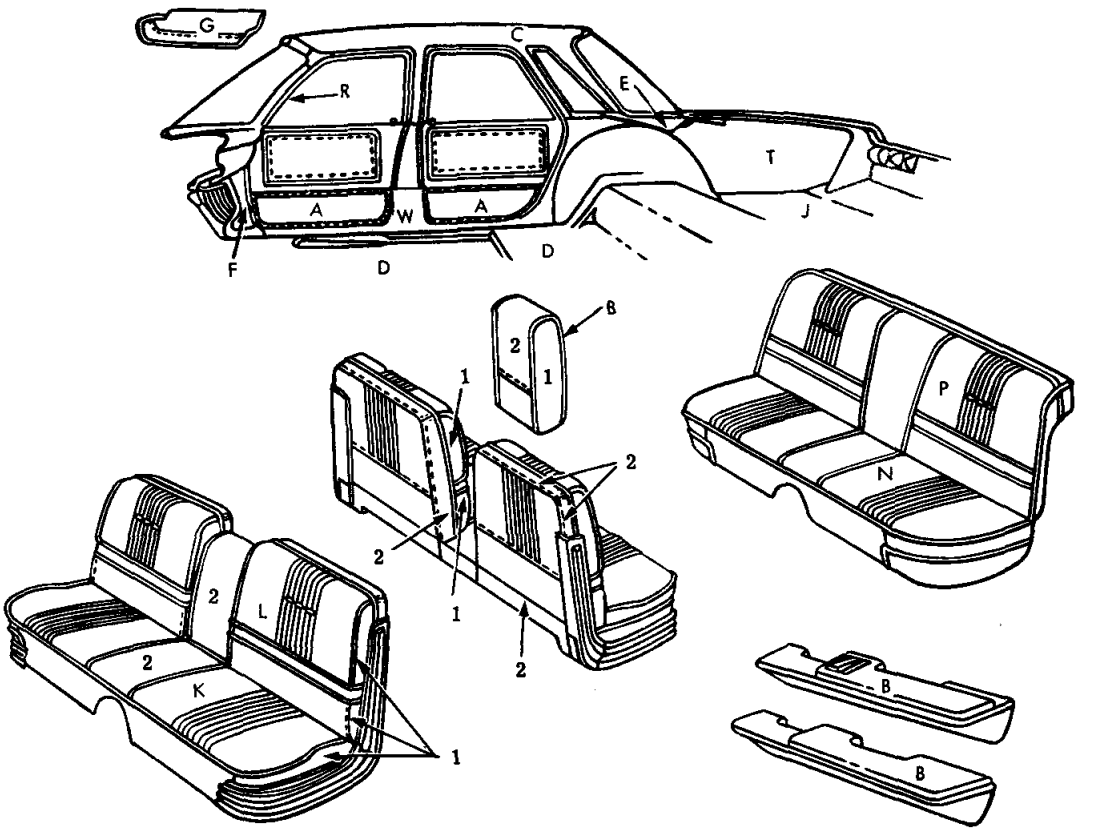

ITEM	TYPE OF MATERIAL	PART TYPE CODE	MAT'L WIDTH	PART NUMBERS AND COLORS BLUE	RED	TAN	
1	Vinyl 35.5 oz.	23-114-15	54"	0441 AB4	0441 VR7	0441 VT6	
2	Vinyl 35.5 oz.	23-114-15	54"	0441 AB8	0441 AR8	0441 VT8	

Distribution Drawing Page Appears Following Illustration Section

1965 DODGE D2-H 4 DOOR (6 WINDOW) SEDAN
VINYL TRIM
CODES H4B, H4R, H4T

★ Indicates use as required.
B Indicates parts not listed in any previous parts book.
May 1965, Supersedes Sept. 4, 1964.

MyMopar.com

Printed in U.S.A.
Data and specifications subject to change without notice.
* Indicates change or addition.

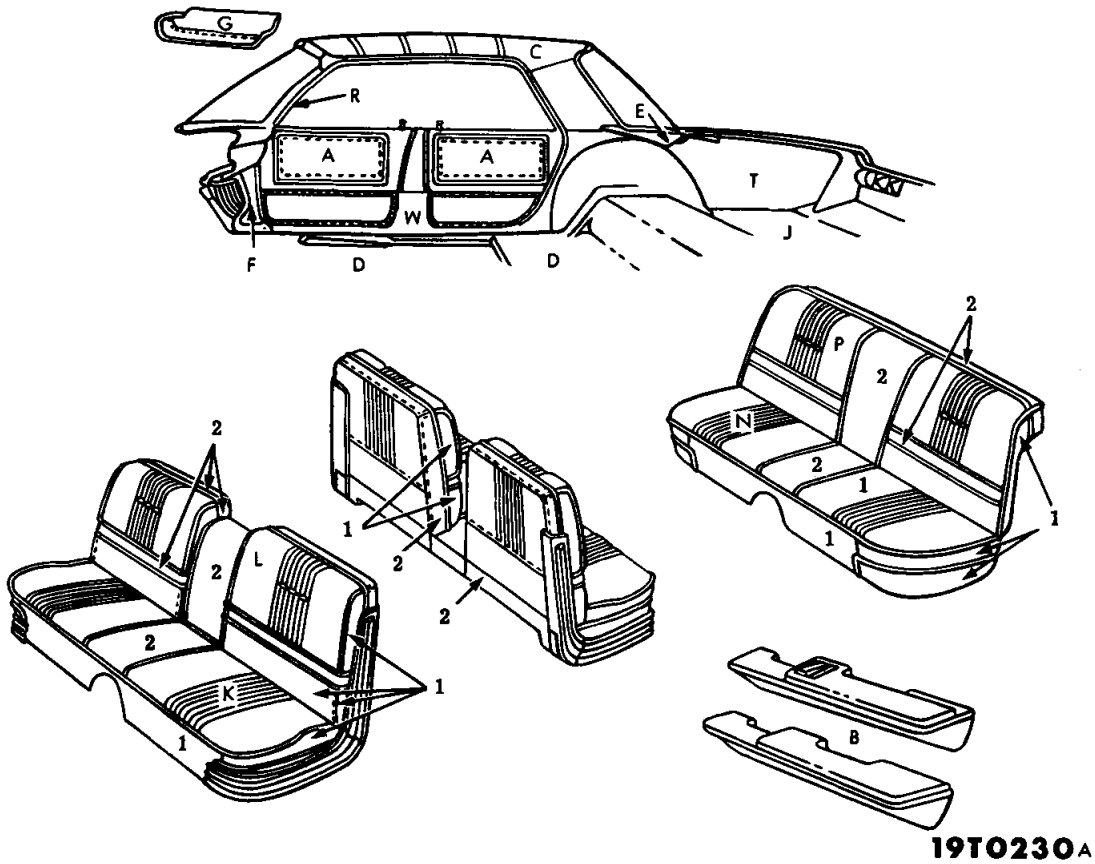

ITEM	TYPE OF MATERIAL	PART TYPE CODE	MAT'L WIDTH	PART NUMBERS AND COLORS BLUE	TURQUOISE	TAN	RED
1	Vinyl 35.5 oz.	23-114-15	54"	0441 AB4	0441 AQ4	0441 VT6	0441 VR7
2	Vinyl 35.5 oz.	23-114-15	54"	0441 AB8	0441 AQ8	0441 VT8	B0441 AR8

ITEM	TYPE OF MATERIAL	PART TYPE CODE	MAT'L WIDTH	PART NUMBERS AND COLORS BLACK	GOLD		
1	Vinyl 35.5 oz.	23-114-15	54"	0441 VX9	B0441 AY3		
2	Vinyl 35.5 oz.	23-114-15	54"	0441 VX9	B0441 AY8		

Distribution Drawing Legend Page Appears Following Illustration Section

1965 DODGE D2-H 4 DOOR HARDTOP
VINYL TRIM
CODES H4B, H4Q, H4R, H4T, H4X, H4Y

★ Indicates use as required.
B Indicates parts not listed in any previous parts book.
* Indicates change or addition.

MyMopar.com

Printed in U.S.A.
Prices and specifications subject to change without notice.
May 1965, Supersedes Sept. 4, 1964.

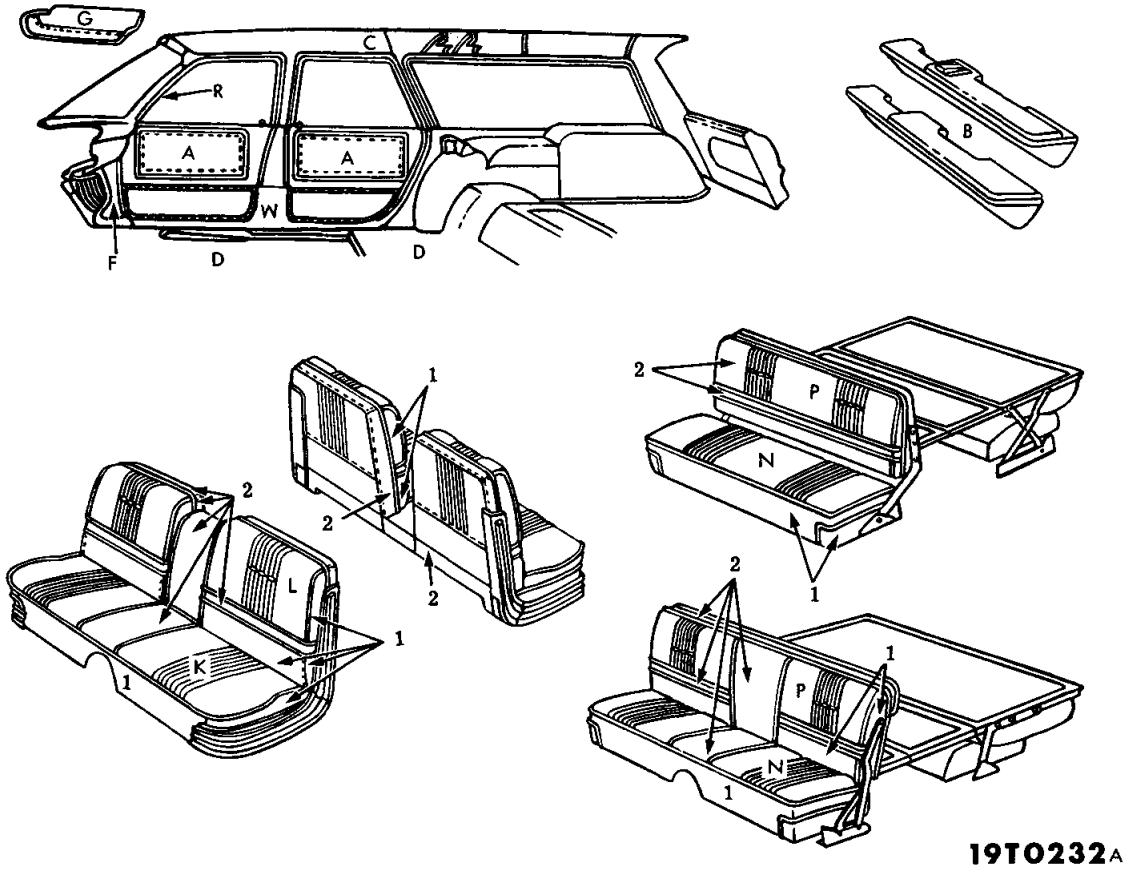

ITEM	TYPE OF MATERIAL	PART TYPE CODE	MAT'L WIDTH	PART NUMBERS AND COLORS BLUE	TURQUOISE	RED	TAN
1	Vinyl 35.5 oz.	23-114-15	54"	0441 AB4	0441 AQ4	0441 VR7	0441 VT6
2	Vinyl 35.5 oz.	23-113-15	54"	0441 AB8	0441 AQ8	0441 AR8	0441 VT8

ITEM	TYPE OF MATERIAL	PART TYPE CODE	MAT'L WIDTH	PART NUMBERS AND COLORS BLACK	GOLD		
1	Vinyl 35.5 oz.	23-114-15	54"	0441 VX9	0441 AY3		
2	Vinyl 35.5 oz.	23-114-15	54"	0441 VX9	0441 AY8		

Distribution Drawing Legend Page Appears Following Illustration Section

1965 DODGE D2-H STATION WAGON
VINYL TRIM
CODES H4B, H4Q, H4R, H4T, H4X, H4Y

MyMopar.com

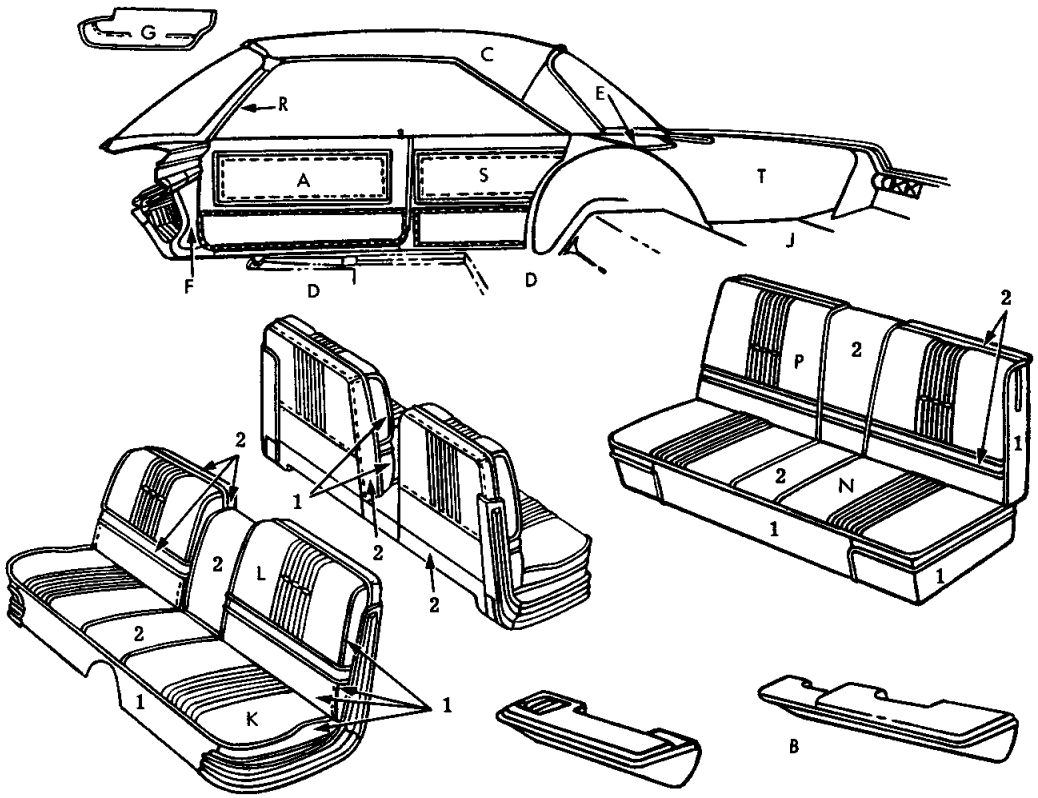

19T0229 A

ITEM	TYPE OF MATERIAL	PART TYPE CODE	MAT'L WIDTH	PART NUMBERS AND COLORS BLUE	TURQUOISE	TAN	RED
1	Vinyl 35.5 oz.	23-114-15	54"	0441 AB4	0441 AQ4	0441 VT6	0441 VR7
2	Vinyl 35.5 oz.	23-114-15	54"	0441 AB8	0441 AQ8	0441 VT8	0441 AR8

ITEM	TYPE OF MATERIAL	PART TYPE CODE	MAT'L WIDTH	PART NUMBERS AND COLORS BLACK	GOLD		
1	Vinyl 35.5 oz.	23-114-15	54"	0441 VX9	0441 AY3		
2	Vinyl 35.5 oz.	23-114-15	54"	0441 VX9	0441 AY8		

Distribution Drawing Legend Page Appears Following Illustration Section

1965 DODGE D2-H, 2 DOOR HARD TOP
VINYL TRIM
CODES H4B, H4Q, H4R, H4T, H4X, H4Y

MyMopar.com

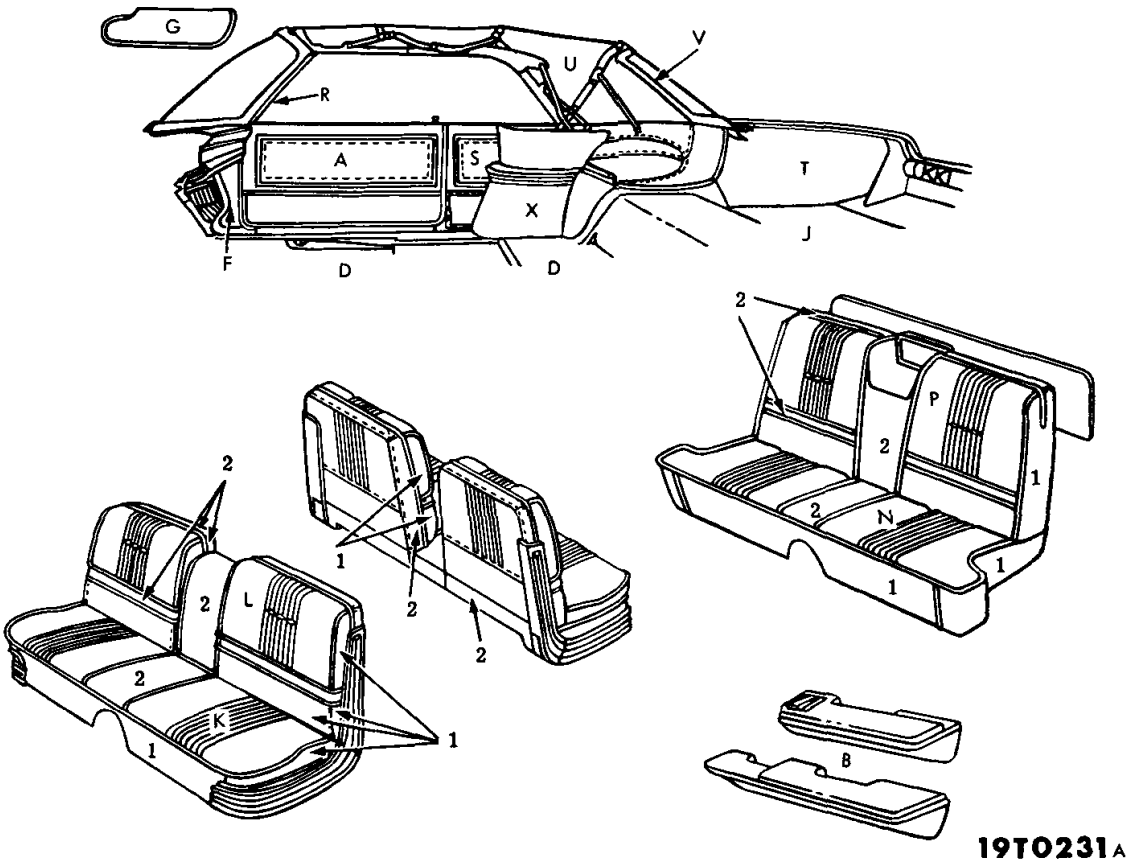

ITEM	TYPE OF MATERIAL	PART TYPE CODE	MAT'L WIDTH	PART NUMBERS AND COLORS BLUE	TURQUOISE	TAN	RED
1	Vinyl 35.5 oz.	23-114-15	54"	0441 AB4	0441 AQ4	0441 VT6	0441 VR7
2	Vinyl 35.5 oz.	23-114-15	54"	0441 AB8	0441 AQ8	0441 VT8	0441 AR8

ITEM	TYPE OF MATERIAL	PART TYPE CODE	MAT'L WIDTH	PART NUMBERS AND COLORS BLACK	GOLD		
1	Vinyl 35.5 oz.	23-114-15	54"	0441 VX9	0441 AY3		
2	Vinyl 35.5 oz.	23-114-15	54"	0441 VX9	0441 AY8		

Distribution Drawing Legend Page Appears Following Illustration Section

1965 DODGE D2-H CONVERTIBLE
VINYL TRIM
CODES H4B, H4Q, H4R, H4T, H4X, H4Y

MyMopar.com

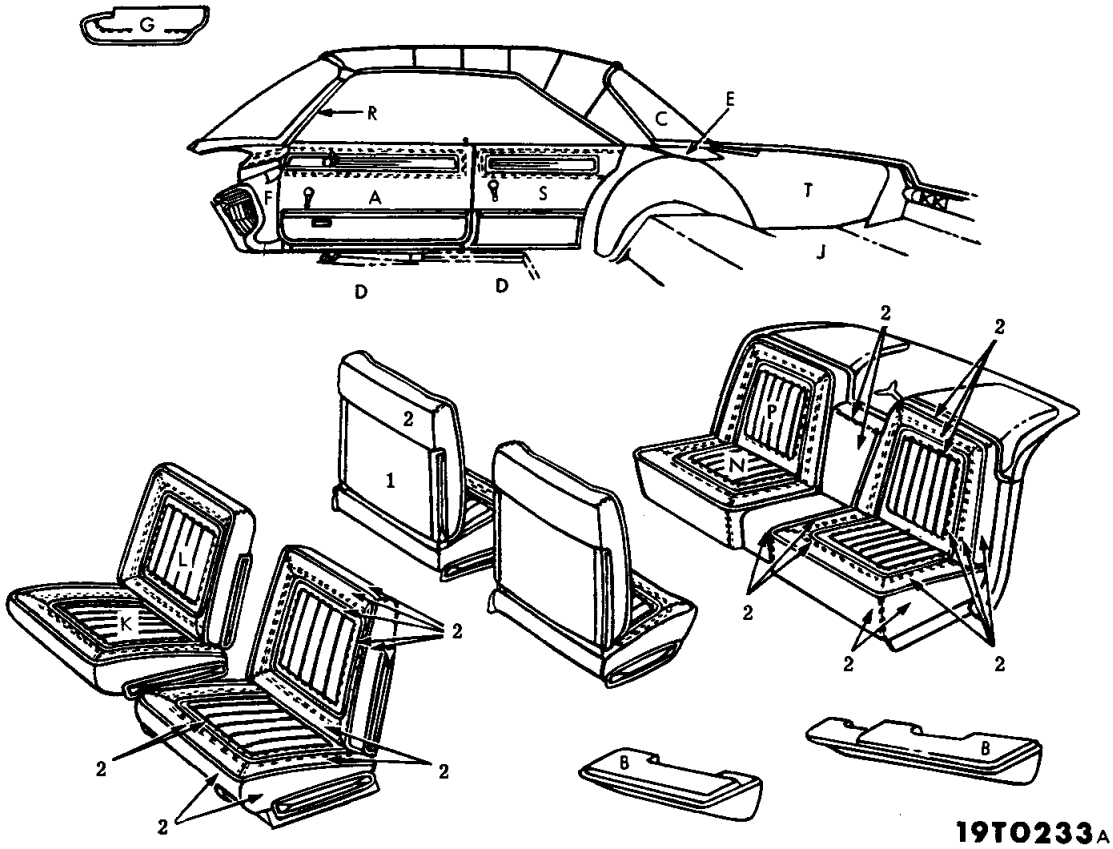

ITEM	TYPE OF MATERIAL	PART TYPE CODE	MAT'L WIDTH	PART NUMBERS AND COLORS BLUE	TURQUOISE		
1	Body Cloth	23-114-2	66"	0130 AB9	0130 AQ9		
2	Vinyl 35.5 oz.	23-114-15	54"	0441 AB4	0441 AQ4		

Distribution Drawing Legend Page Appears Following Illustration Section

1965 DODGE D2-P 2 DOOR HARD TOP
CLOTH AND VINYL TRIM
CODES P1B, P1Q

MyMopar.com

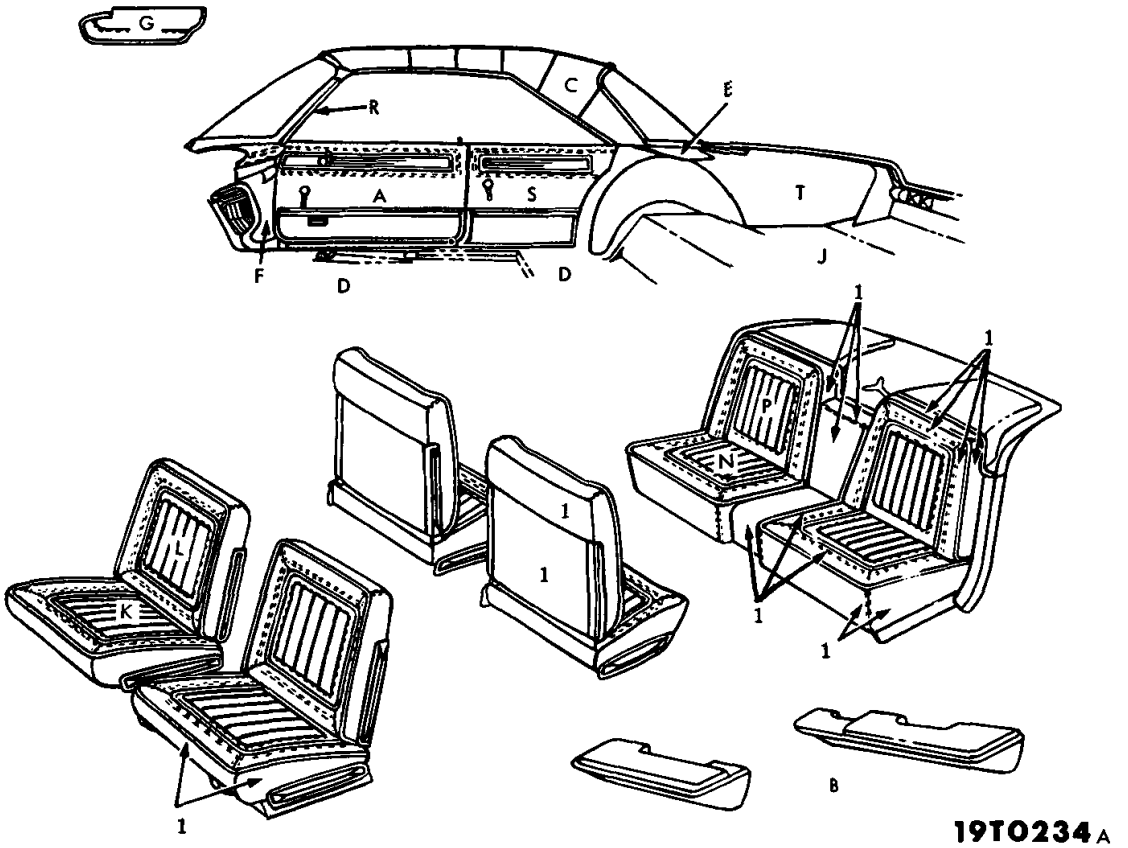

ITEM	TYPE OF MATERIAL	PART TYPE CODE	MAT'L WIDTH	PART NUMBERS AND COLORS RED	TAN	COPPER	BLACK
1	Vinyl 35.5 oz.	23-114-15	54"	0441 AR5	*0441 AT5	*0441 AU8	*0441 VX9

Distribution Drawing Legend Page Appears Following Illustration Section

1965 DODGE D2-P 2 DOOR HARD TOP
VINYL TRIM
CODES P4R, P4T, P4U, P4X

MyMopar.com

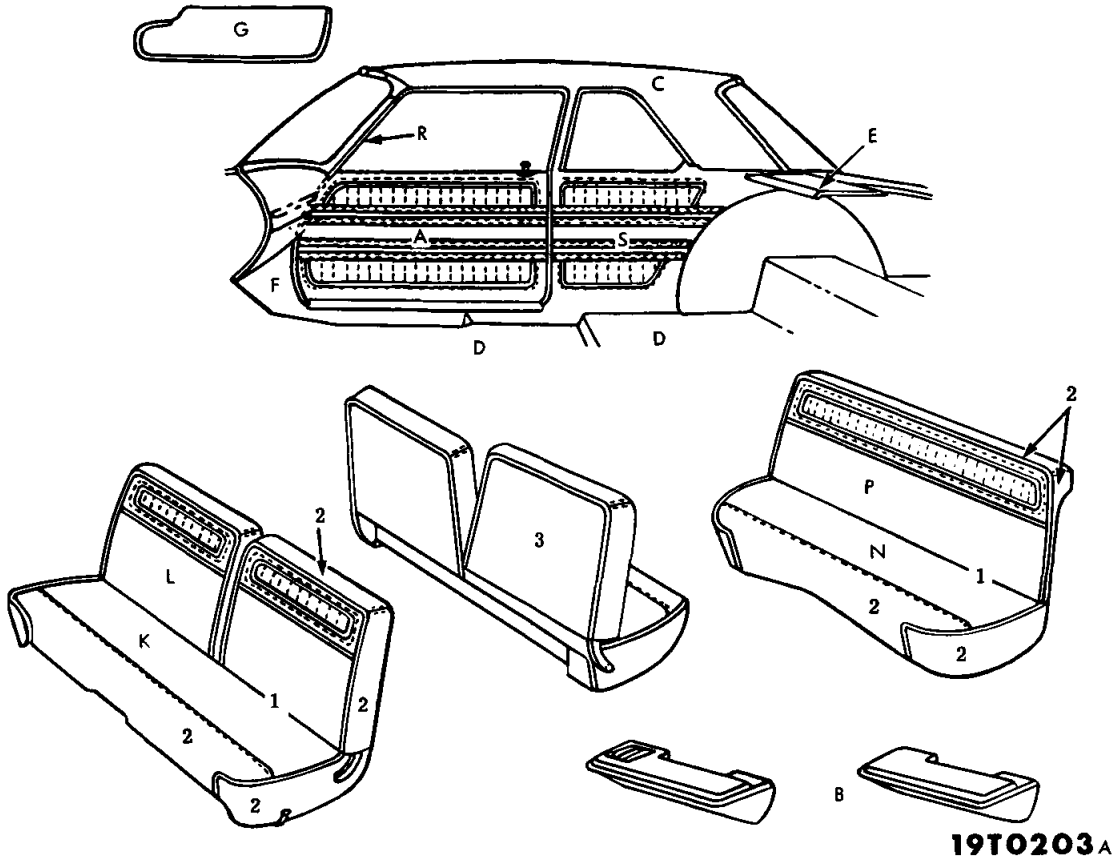

ITEM	TYPE OF MATERIAL	PART TYPE CODE	MAT'L WIDTH	PART NUMBERS AND COLORS BLUE	TURQUOISE	RED	TAN
1	Body Cloth	23-114-2	62"	⊟0127 AB8	⊟0127 AQ8	⊟0127 AR5	⊟0127 AT8
2	Vinyl 35.5 oz.	23-114-15	54"	⊟0441 AB4	⊟0441 AQ4	⊟0441 AR5	0441 VT3
3	Vinyl 20 oz.	23-114-15	56"	⊟0478 AB4	⊟0478 AQ4	⊟0478 AR5	⊟0478 AT6

Distribution Drawing Legend Page Appears Following Illustration Section

1965 CORONET W1-L, W2-L 2 DOOR SEDAN
CLOTH AND VINYL TRIM
CODES L1B, K1B, L1Q, K1Q, L1R, K1R, L1T, K1T

★ Indicates use as required.
⊟ Indicates parts not listed in any previous parts book.

MyMopar.com

Printed in U.S.A.
Prices and specifications subject to change without notice.
May 1965, Supersedes Sept. 4, 1964.

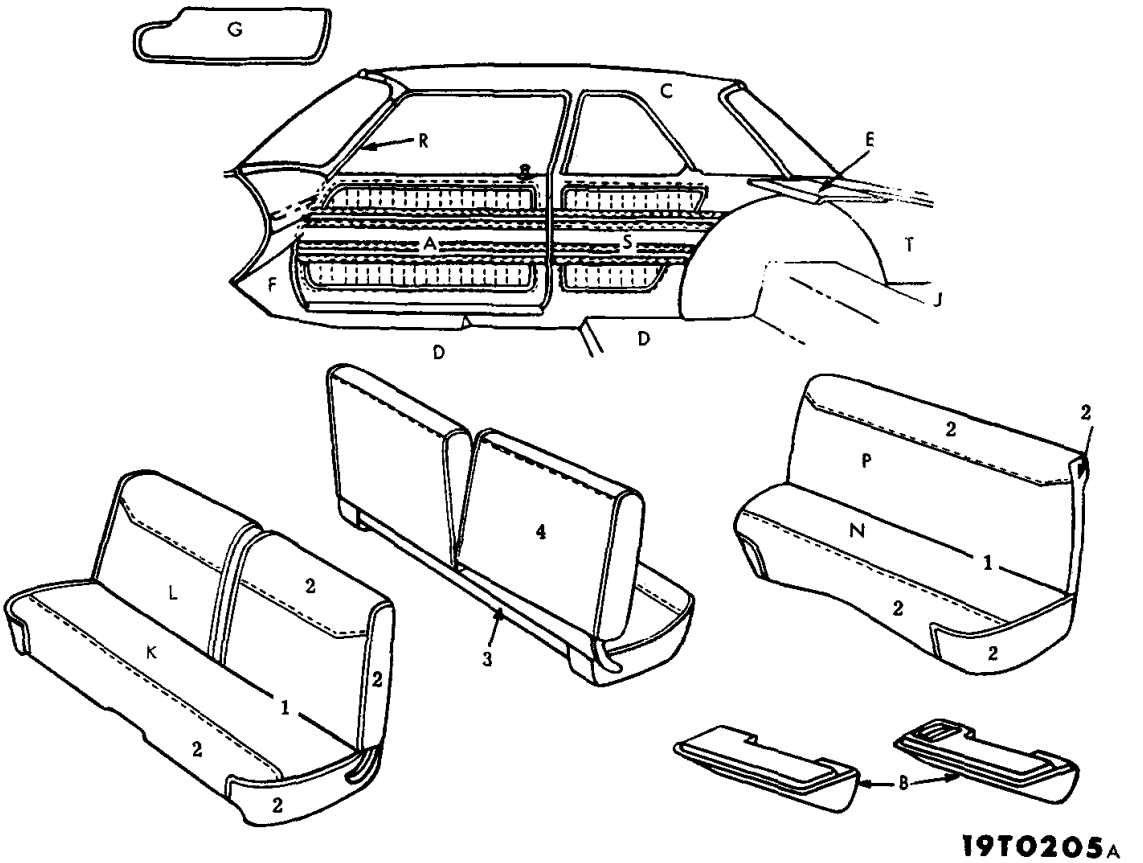

ITEM	TYPE OF MATERIAL	PART TYPE CODE	MAT'L WIDTH	TAN			
				*PART NUMBERS AND COLORS			
1	Body Cloth	23-114-2	52"	B0104 ATT			
2	Vinyl 35.5 oz.	23-114-15	54"	0441 VT6			
3	Vinyl 35.5 oz.	23-114-15	54"	0441 VT8			
4	Vinyl 21 oz.	23-114-15	54"	B0487 AT8			

Distribution Drawing Legend Page Appears Following Illustration Section

1965 CORONET W1-L, W2-L, 2 DOOR SEDAN
CLOTH AND VINYL TRIM
CODES L2T, K2T

★ Indicates use as required.
B Indicates parts not listed in any previous parts book.
May 1965, Supersedes Sept. 4, 1964.

Printed in U.S.A.
Prices and specifications subject to change without notice.
MyMopar.com

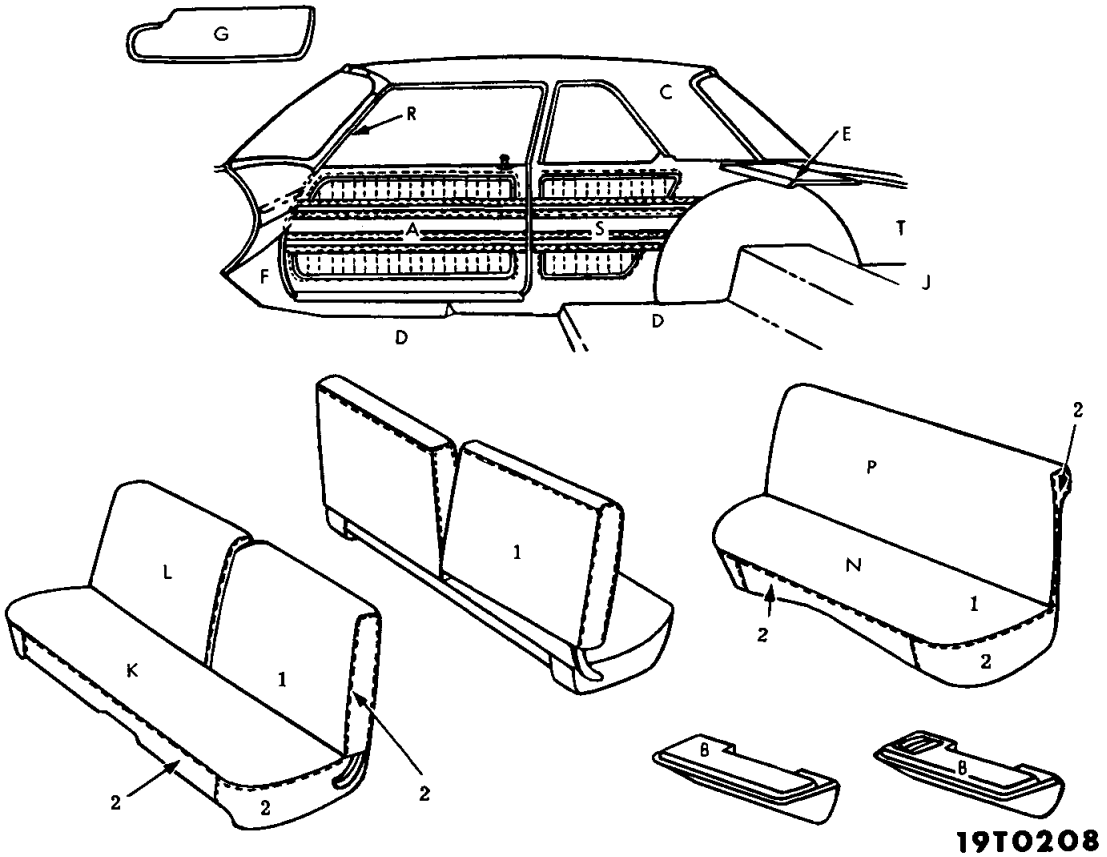

ITEM	TYPE OF MATERIAL	PART TYPE CODE	MAT'L WIDTH	PART NUMBERS AND COLORS TAN			
1	Vinyl 37 oz.	23-114-15	50″	⊟0445 AT8			
2	Vinyl 35.5 oz.	23-114-15	54″	0441 VT8			

Distribution Drawing Legend Page Appears Following Illustration Section

1965 CORONET W1-L, W2-L 2 DOOR SEDAN
VINYL TRIM
CODES L8T, K8T

★ Indicates use as required.
⊟ Indicates parts not listed in any previous parts book.

MyMopar.com

Printed in U.S.A.
Prices and specifications subject to change without notice.
September 4, 1964.

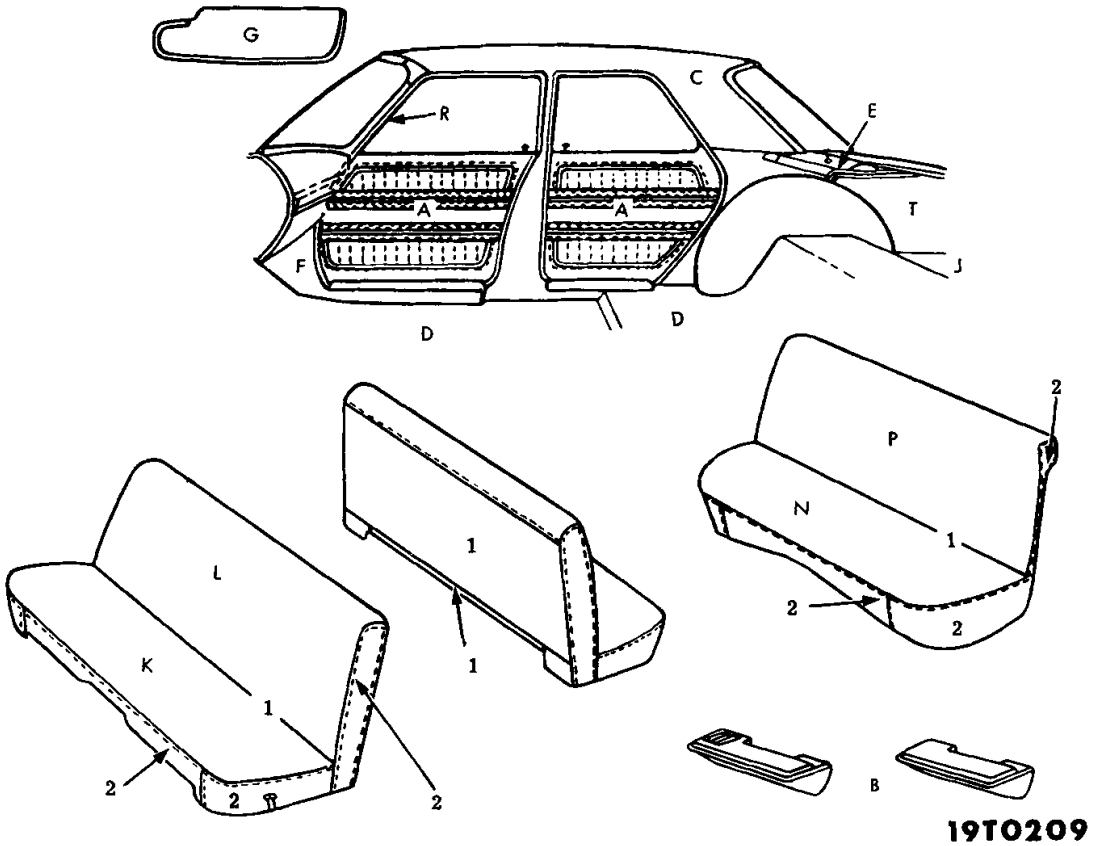

ITEM	TYPE OF MATERIAL	PART TYPE CODE	MAT'L WIDTH	PART NUMBERS AND COLORS TAN			
1	Vinyl 37 oz.	23-114-15	50″	0445 AT8			
2	Vinyl 35.5 oz.	23-114-15	54″	0441 VT8			

Distribution Drawing Legend Page Appears Following Illustration Section

1965 CORONET W1-L, W2-L 4 DOOR SEDAN
VINYL TRIM
CODES L8T, K8T, T8T

★ Indicates use as required.
⊟ Indicates parts not listed in any previous parts book.
September 4, 1964.

MyMopar.com

Printed in U.S.A.
Prices and specifications subject to change without notice.

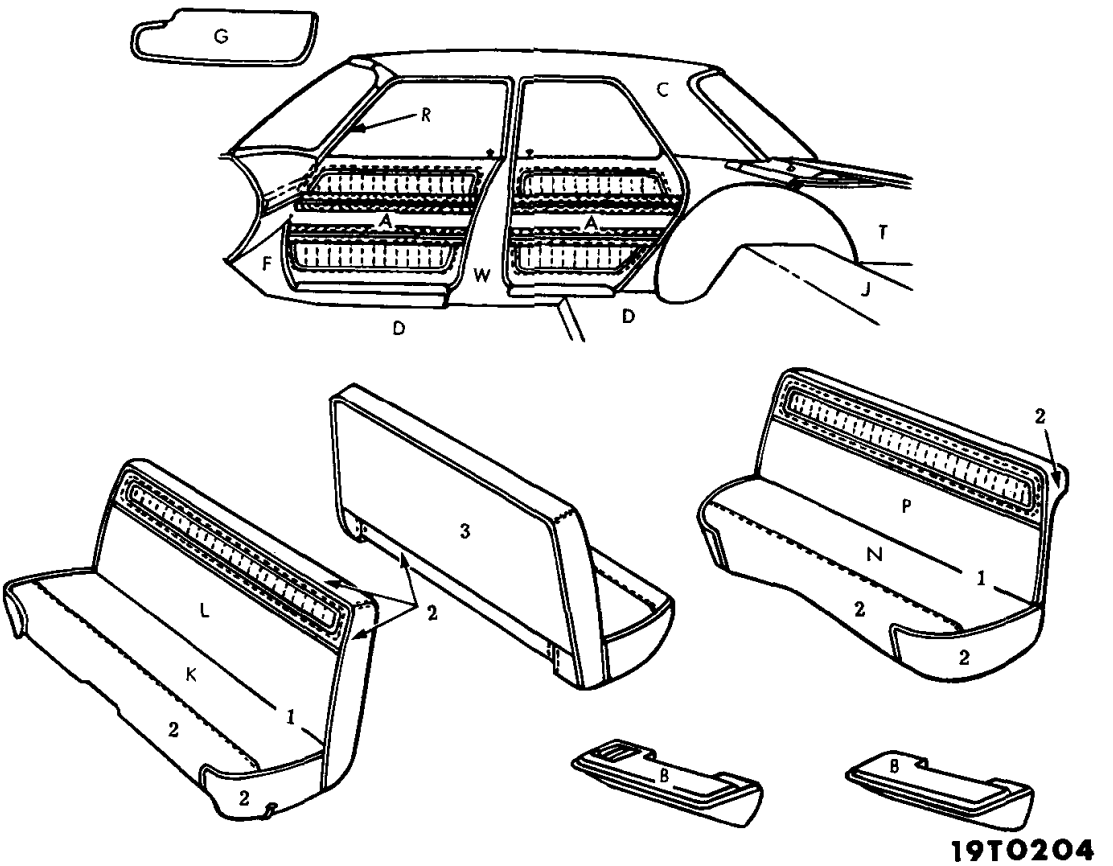

ITEM	TYPE OF MATERIAL	PART TYPE CODE	MAT'L WIDTH	PART NUMBERS AND COLORS			
				BLUE	TURQUOISE	RED	TAN
1	Body Cloth	23-114-2	62″	⊟0127 AB8	⊟0127 AQ8	⊟0127 AR5	⊟0127 AT8
2	Vinyl 35.5 oz.	23-114-15	54″	⊟0441 AB4	⊟0441 AQ4	⊟0441 AR5	0441 VT6
3	Vinyl 20 oz.	23-114-15	56″	⊟0478 AB4	⊟0478 AQ4	⊟0478 AR5	⊟0478 AT6

Distribution Drawing Legend Page Appears Following Illustration Section

1965 CORONET W1-L, W2-L 4 DOOR SEDAN
CLOTH AND VINYL TRIM
CODES L1B, K1B, L1Q, K1Q, L1R, K1R, L1T, K1T

MyMopar.com

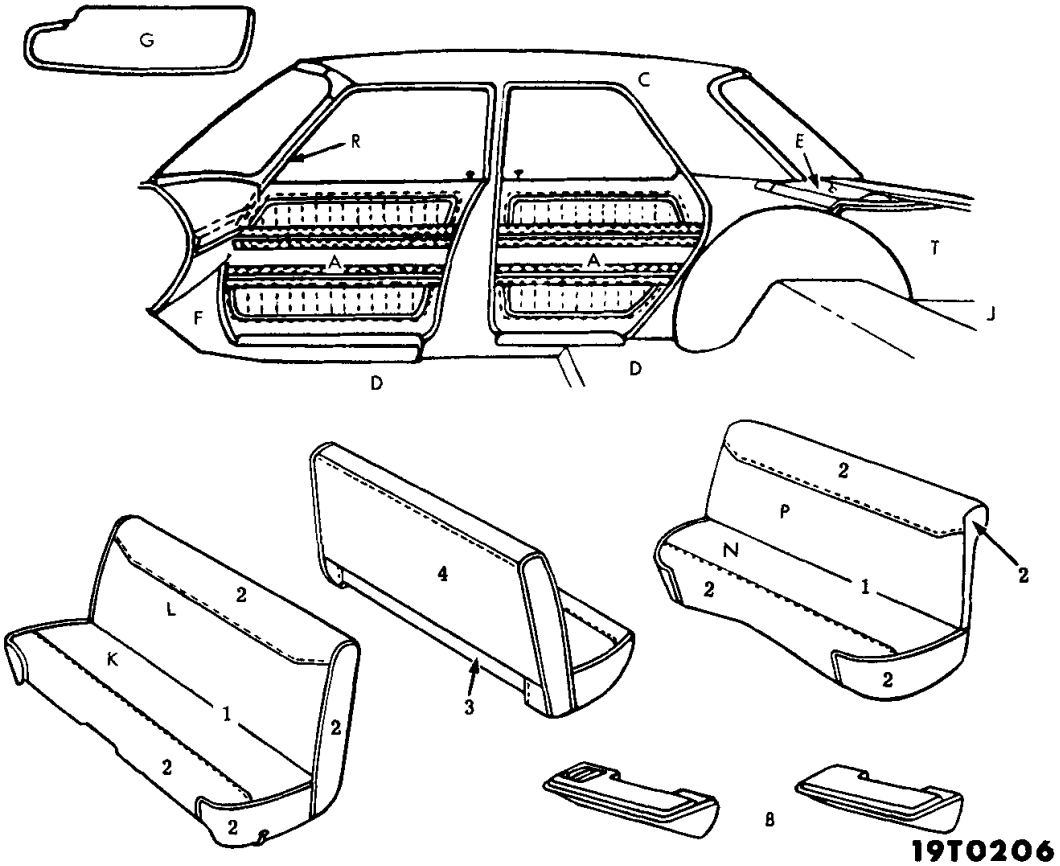

ITEM	TYPE OF MATERIAL	PART TYPE CODE	MAT'L WIDTH	PART NUMBERS AND COLORS TAN			
1	Body Cloth	23-114-2	52″	0104 ATT			
2	Vinyl 35.5 oz.	23-114-15	54″	0441 VT6			
3	Vinyl 35.5 oz.	23-114-15	54″	*0441 VT8			
4	Vinyl 21 oz.	23-114-15	54″	0487 AT8			

Distribution Drawing Legend Page Appears Following Illustration Section

1965 CORONET W1-L, W2-L 4 DOOR SEDAN
CLOTH AND VINYL TRIM
CODES L2T, K2T

MyMopar.com

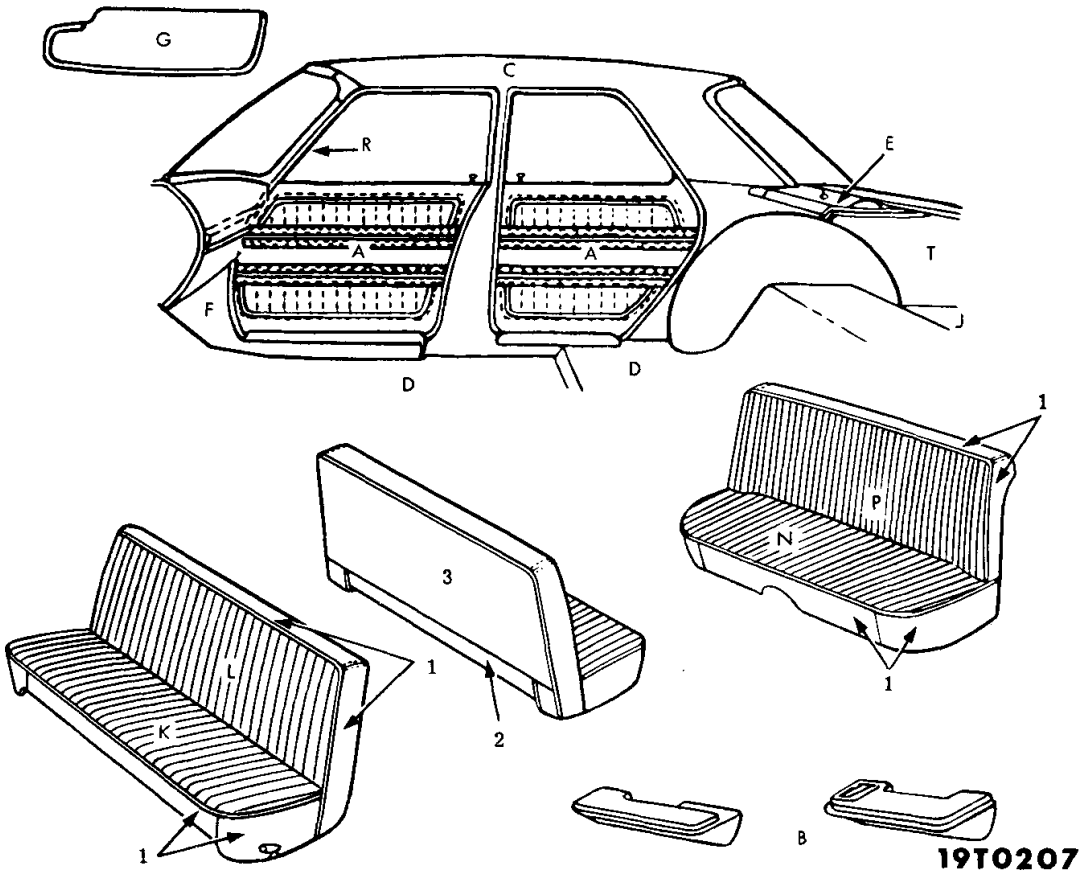

ITEM	TYPE OF MATERIAL	PART TYPE CODE	MAT'L WIDTH	PART NUMBERS AND COLORS BLUE	RED	TAN	
1	Vinyl 35.5 oz.	23-114-15	54"	⊟0441 AB4	⊟0441 AR5	0441 VT6	
2	Vinyl 35.5 oz.	23-114-15	54"	⊟0441 AB4	⊟0441 AR8	0441 VT6	
3	Vinyl 20 oz.	23-114-15	56"	⊟0478 AB4	⊟0478 AR8	⊟0478 AT6	

Distribution Drawing Legend Page Appears Following Illustration Section

1965 CORONET W1-L, W2-L 4 DOOR SEDAN
VINYL TRIM
CODES L5B, L5R, L5T

★ Indicates use as required.
⊟ Indicates parts not listed in any previous parts book.

MyMopar.com

Printed in U.S.A.
Prices and specifications subject to change without notice.
September 4, 1964.

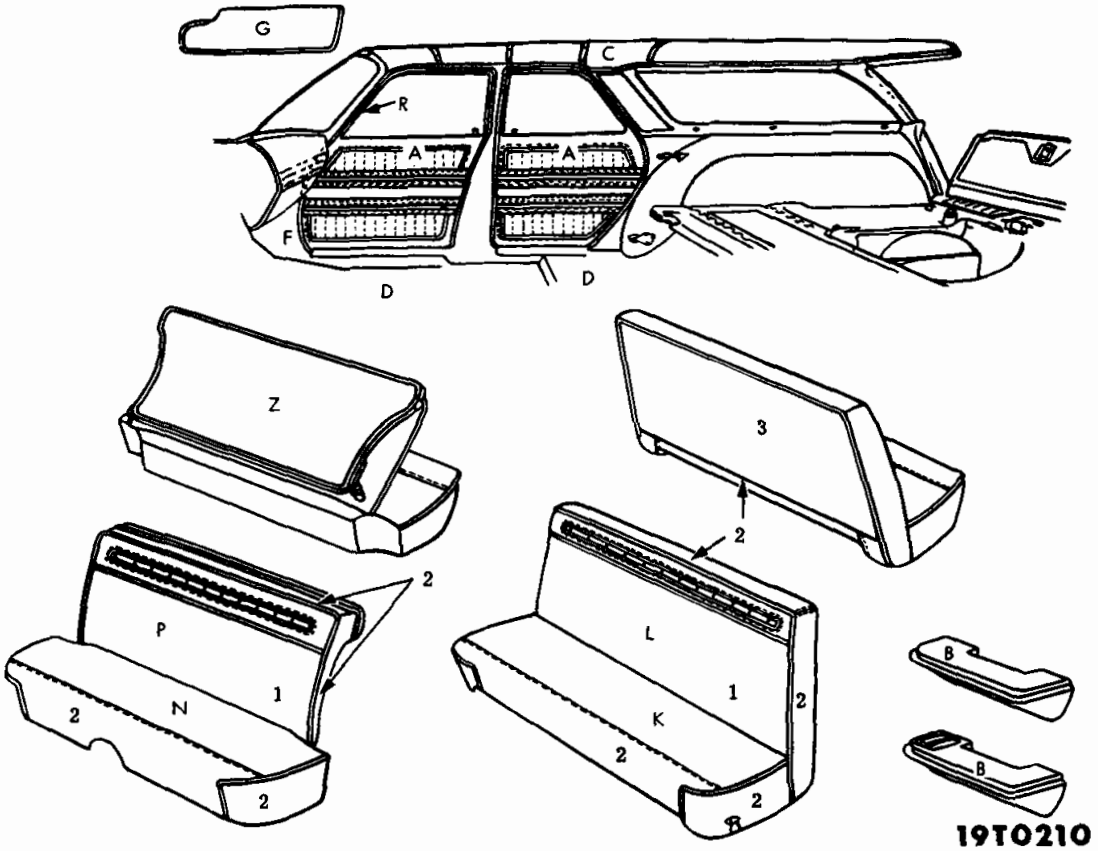

ITEM	TYPE OF MATERIAL	PART TYPE CODE	MAT'L WIDTH	PART NUMBERS AND COLORS BLUE	TURQUOISE	RED	TAN
1	Vinyl 43 oz.	23-114-15	61"	⊟0497 AB8	⊟0497 AQ8	⊟0497 AR5	⊟0497 AT8
2	Vinyl 35.5 oz.	23-114-15	54"	⊟0441 AB4	⊟0441 AQ4	⊟0441 AR5	0441 VT6
3	Vinyl 20 oz.	23-114-15	54"	⊟0478 AB4	⊟0478 AQ4	⊟0478 AR5	⊟0478 AT6

Distribution Drawing Legend Page Appears Following Illustration Section

1965 CORONET W1-L, W2-L STATION WAGON
VINYL TRIM
CODES L4B, K4B, L4Q, K4Q, L4R, K4R, L4T, K4T

★ Indicates use as required.
⊟ Indicates parts not listed in any previous parts book.
September 4, 1964.

Printed in U.S.A.
Prices and specifications subject to change without notice.
MyMopar.com

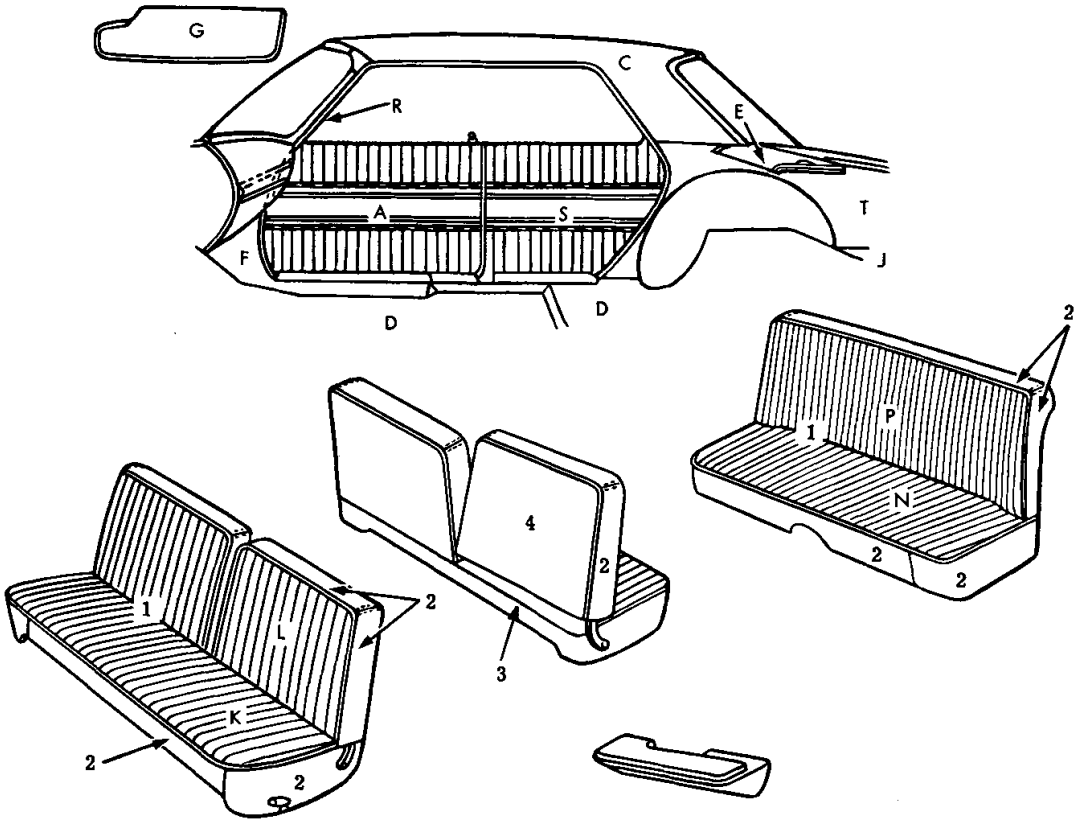

19T0211A

ITEM	TYPE OF MATERIAL	PART TYPE CODE	MAT'L WIDTH	PART NUMBERS AND COLORS BLUE	TURQUOISE	RED	TAN
1	Body Cloth	23-114-2		Not Serviced			
2	Vinyl 35.5 oz.	23-114-15	54"	0441 AB4	0441 AQ4	---- ---	0441 VT6
3	Vinyl 35.5 oz.	23-114-15	54"	---- ---	---- ---	0441 AR5	---- ---
4	Vinyl 35.5 oz.	23-114-15	54"	0441 AB4	0441 AQ4	0441 AR8	0441 VT6

Distribution Drawing Legend Page Appears Following Illustration Section

1965 CORONET 440 W1-H, W2-H 2 DOOR SEDAN
CLOTH AND VINYL TRIM
CODES H1B, H1Q, H1R, H1T

MyMopar.com

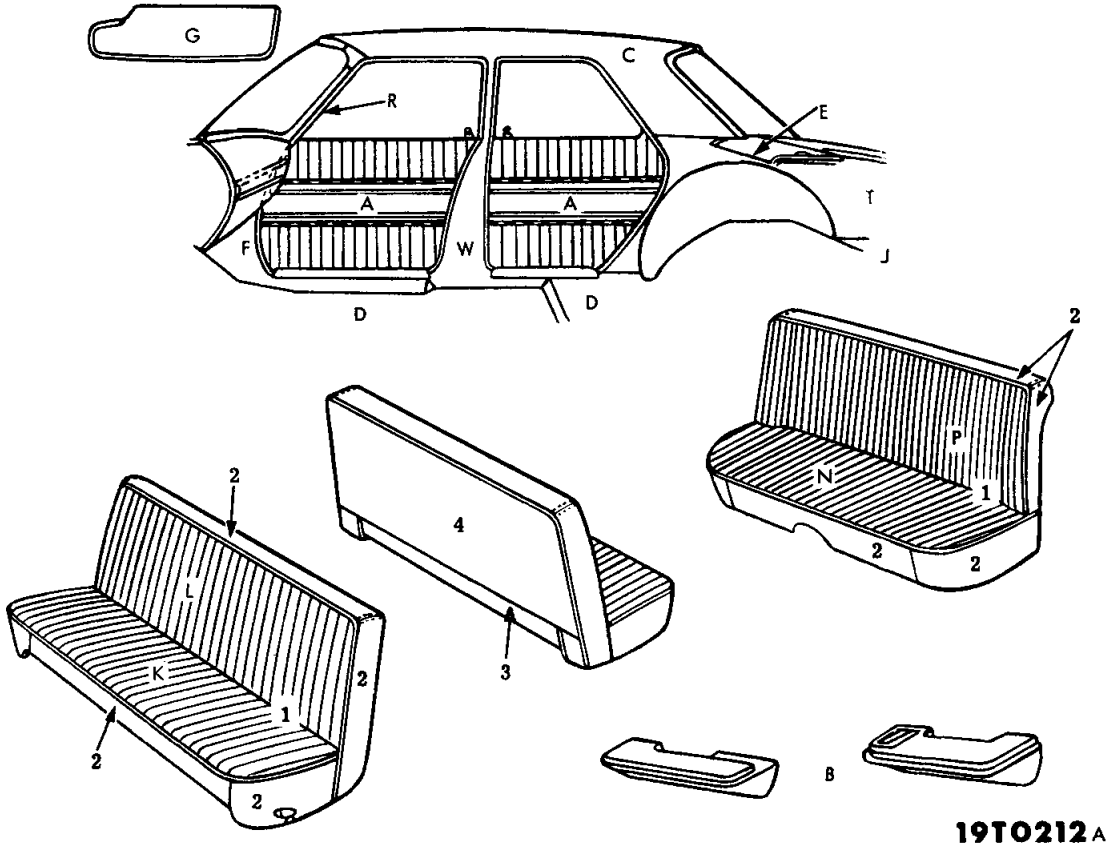

ITEM	TYPE OF MATERIAL	PART TYPE CODE	MAT'L WIDTH	PART NUMBERS AND COLORS BLUE	TURQUOISE	RED	TAN
1	Body Cloth	23-114-2		Not Serviced			
2	Vinyl 35.5 oz.	23-114-15	54"	⊟0441 AB4	⊟0441 AQ4	---- ---	0441 VT6
3	Vinyl 35.5 oz.	23-114-15	54"	---- ---	---- ---	⊟0441 AR5	---- ---
4	Vinyl 35.5 oz.	23-114-15	54"	⊟0441 AB4	⊟0441 AQ4	⊟0441 AR8	0441 VT6

Distribution Drawing Legend Page Appears Following Illustration Section

1965 CORONET 440 W1-H, W2-H 4 DOOR SEDAN

CLOTH AND VINYL TRIM
CODES H1B, H1Q, H1R, H1T

★ Indicates use as required.
⊟ Indicates parts not listed in any previous parts book.
May 1965, Supersedes Sept. 4, 1964.

Printed in U.S.A.
Prices and specifications subject to change without notice.

MyMopar.com

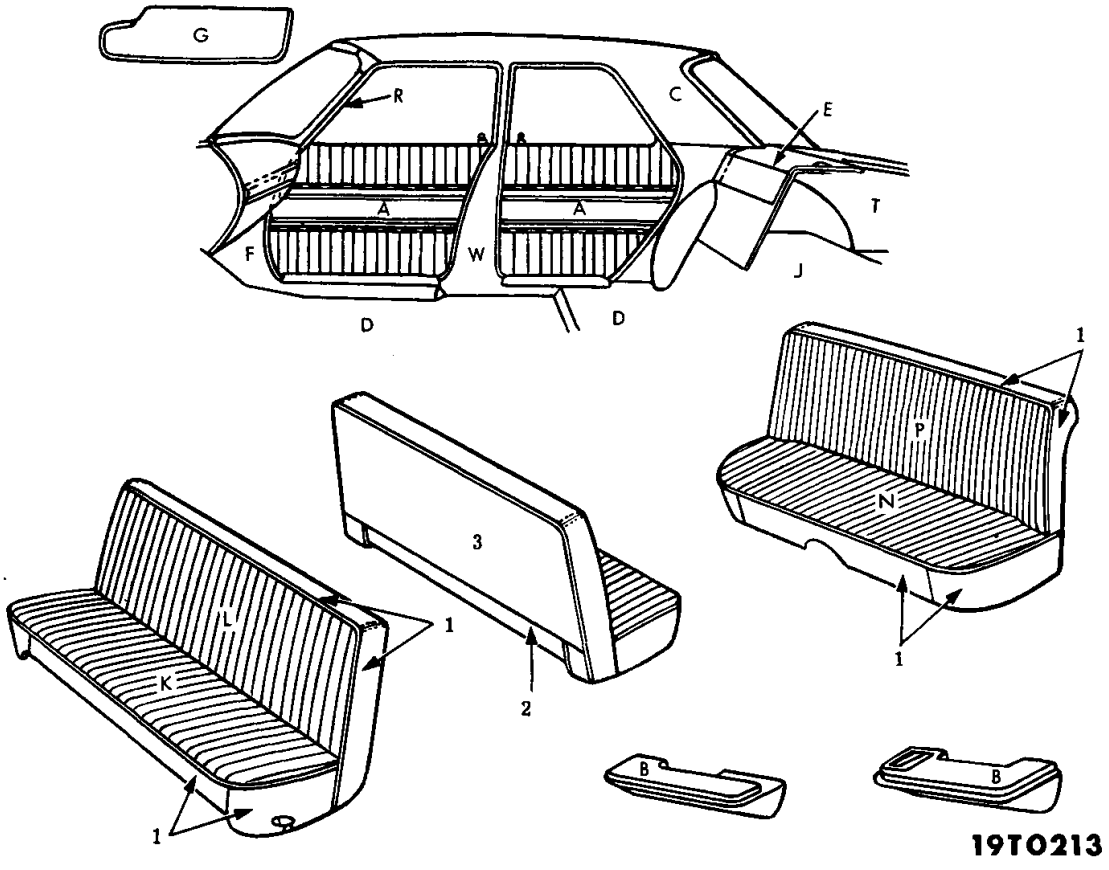

ITEM	TYPE OF MATERIAL	PART TYPE CODE	MAT'L WIDTH	PART NUMBERS AND COLORS BLUE	RED	TAN	
1	Vinyl 35.5 oz.	23-114-15	54″	0441 AB4	---- ---	0441 VT6	
2	Vinyl 35.5 oz.	23-114-15	54″	*0441 AB4	0441 AR5	*0441 VT6	
3	Vinyl 35.5 oz.	23-114-15	54″	0441 AB4	0441 AR8	0441 VT6	

Distribution Drawing Legend Page Appears Following Illustration Section

1965 CORONET 440 WH-1, WH-2 4 DOOR SEDAN
VINYL TRIM
CODES H5B, H5R, H5T

MyMopar.com

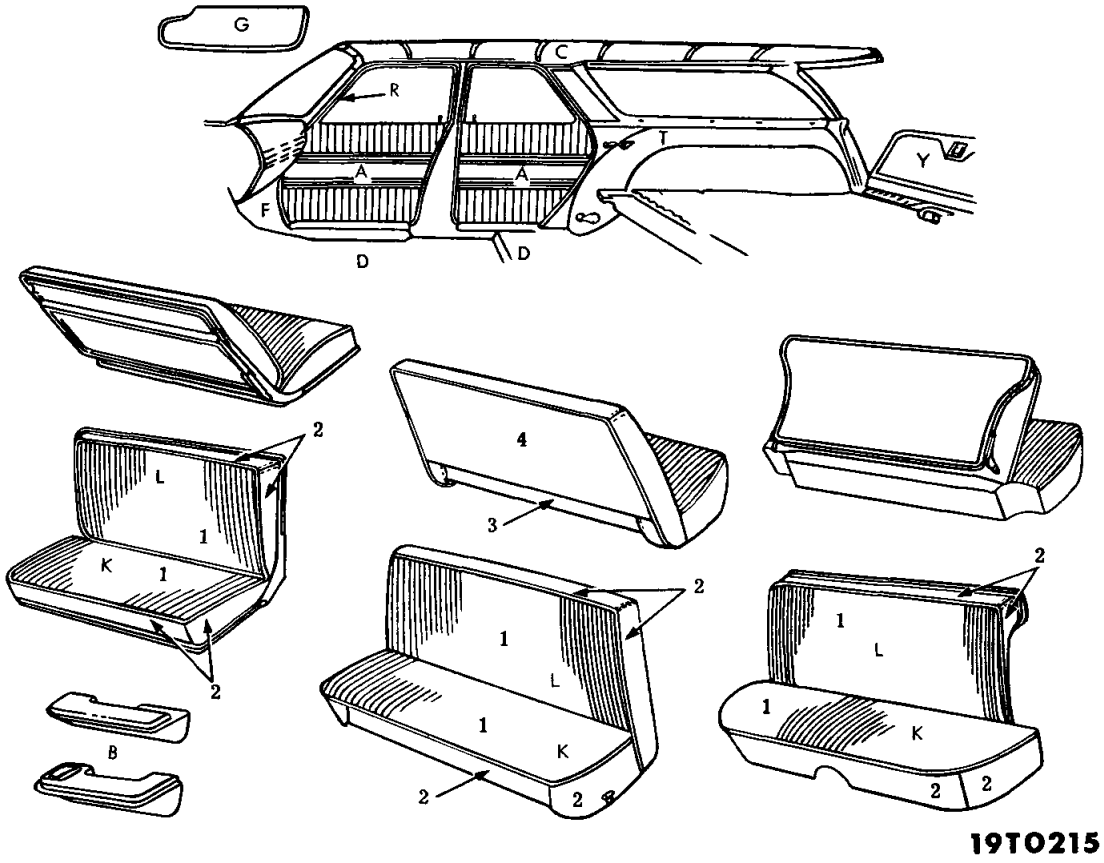

ITEM	TYPE OF MATERIAL	PART TYPE CODE	MAT'L WIDTH	PART NUMBERS AND COLORS BLUE	TURQUOISE	RED	TAN
1	Vinyl	23-114-15		Not Serviced			
2	Vinyl 35.5 oz.	23-114-15	54"	0441 AB4	0441 AQ4	*0441 AR5	0441 VT6
3	Vinyl 35.5 oz.	23-114-15	54"	---- ---	---- ---	0441 AR5	
4	Vinyl 35.5 oz.	23-114-15	54"	0441 AB4	0441 AQ4	0441 AR8	0441 VT6

Distribution Drawing Legend Page Appears Following Illustration Section

1965 CORONET 440 W1-H, W2-H STATION WAGON
VINYL TRIM
CODES H4B, H4Q, H4R, H4T

★ Indicates use as required.
⊟ Indicates parts not listed in any previous parts book.
May 1965, Supersedes Sept. 4, 1964.

Printed in U.S.A.
Prices and specifications subject to change without notice.
* Indicates change or addition.

MyMopar.com

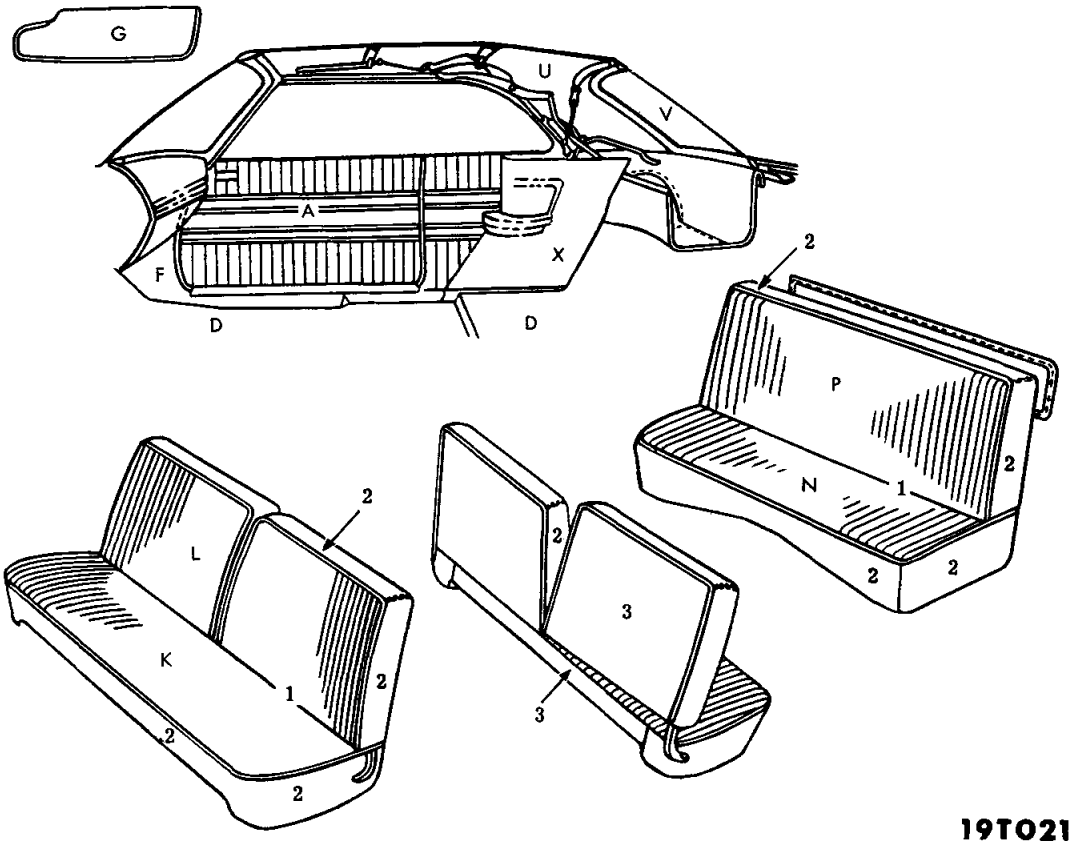

ITEM	TYPE OF MATERIAL	PART TYPE CODE	MAT'L WIDTH	PART NUMBERS AND COLORS BLUE	TURQUOISE	RED	TAN
1	Vinyl	23-114-15		Not Serviced			
2	Vinyl 35.5 oz.	23-114-15	54"	0441 AB4	0441 AQ4	*0441 AR5	0441 AR8
3	Vinyl 35.5 oz.	23-114-15	54"	*0441 AB4	*0441 AQ4	0441 AR8	*0441 VT6

Distribution Drawing Legend Page Appears Following Illustration Section

1965 CORONET 440 W1-H, W2-H CONVERTIBLE
VINYL TRIM
CODES H4B, H4Q, H4R, H4T

★ Indicates use as required.
⊟ Indicates parts not listed in any previous parts book.
* Indicates change or addition.

MyMopar.com

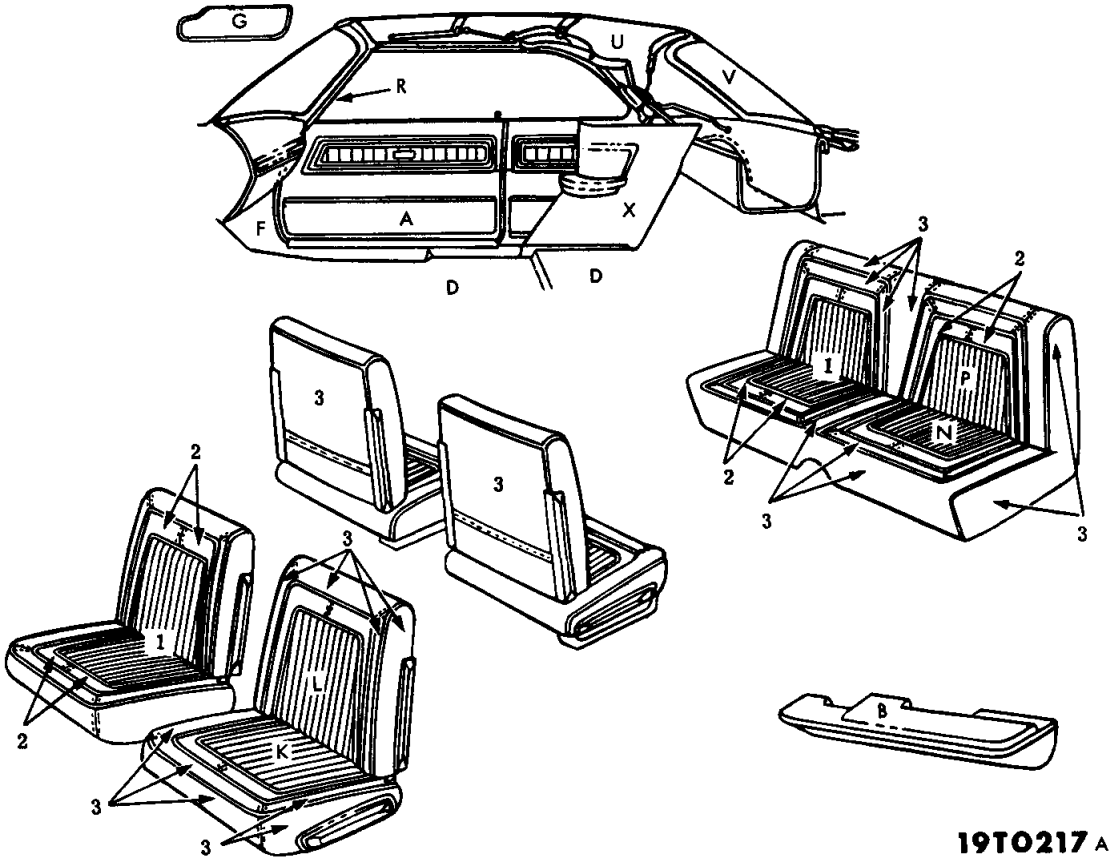

ITEM	TYPE OF MATERIAL	PART TYPE CODE	MAT'L WIDTH	PART NUMBERS AND COLORS BLUE	TURQUOISE	RED	TAN
1	Vinyl	23-114-15		Not Serviced			
2	Vinyl 35.5 oz.	23-114-15	54"	0479 AB9	0479 AQ9	0479 AR9	0479 AT8
3	Vinyl 35.5 oz.	23-114-15	54"	0441 AB4	0441 AQ4	0441 VR7	0441 VT6

ITEM	TYPE OF MATERIAL	PART TYPE CODE	MAT'L WIDTH	PART NUMBERS AND COLORS BLACK	GOLD		
2	Vinyl 35.5 oz.	23-114-15	54"	0464 AX9	0464 AW3		
3	Vinyl 35.5 oz.	23-114-15	54"	0441 VX9	0441 VW3		

Distribution Drawing Legend Page Appears Following Illustration Section

1965 CORONET 500 W1-P, W2-P CONVERTIBLE
VINYL TRIM
CODES P4B, P4Q, P4R, P4T, P4X, P4Y

★ Indicates use as required.
⊟ Indicates parts not listed in any previous parts book.
May 1965, Supersedes Sept. 4, 1964.

Printed in U.S.A.
Prices and specifications subject to change without notice.
* Indicates change or addition.
MyMopar.com

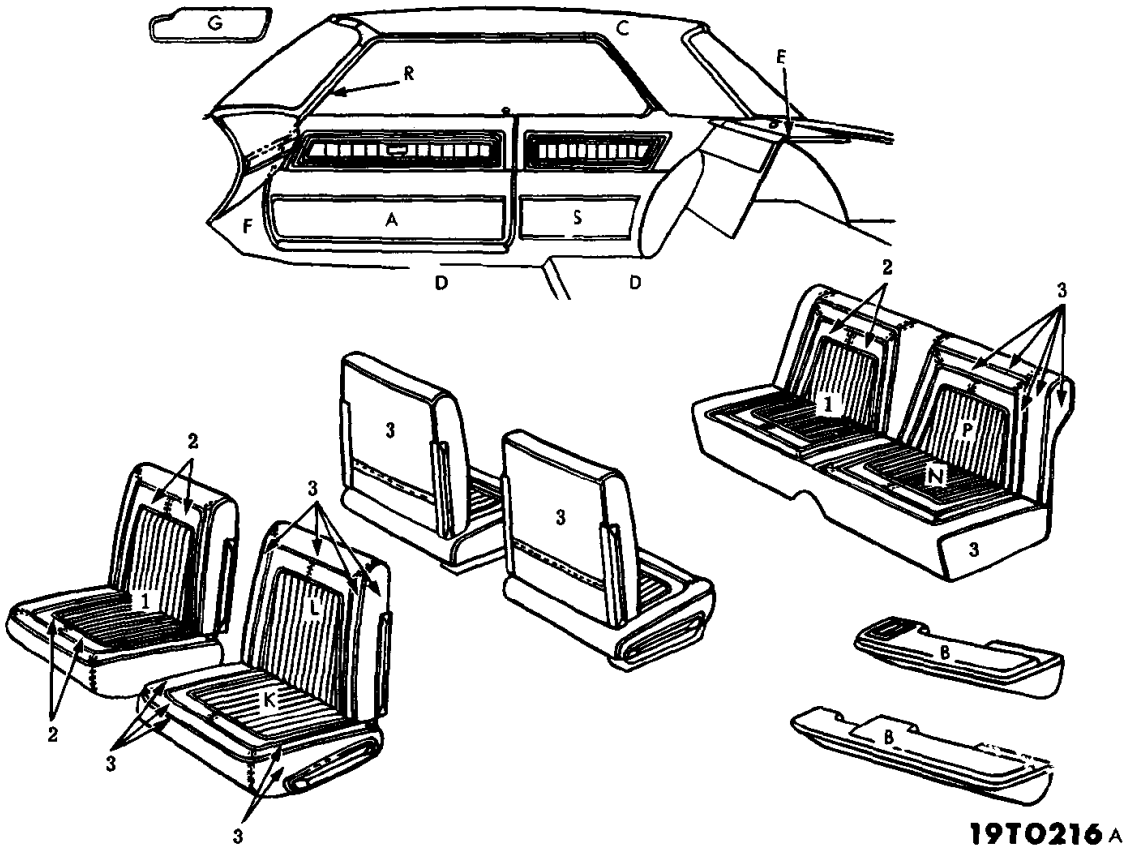

ITEM	TYPE OF MATERIAL	PART TYPE CODE	MAT'L WIDTH	PART NUMBERS AND COLORS BLUE	TURQUOISE	RED	TAN
1	Vinyl	23-114-15		Not Serviced			
2	Vinyl 35.5 oz.	23-114-15	54"	0479 AB9	0479 AQ9	0479 AR9	0479 AT8
3	Vinyl 35.5 oz.	23-114-15	54"	0441 AB4	0441 AQ4	0441 VR7	0441 VT6

ITEM	TYPE OF MATERIAL	PART TYPE CODE	MAT'L WIDTH	PART NUMBERS AND COLORS BLACK	GOLD		
2	Vinyl 35.5 oz.	23-114-15	54"	0464 AX9	0464 AW3		
3	Vinyl 35.5 oz.	23-114-15	54"	0441 VX9	0441 VW3		

Distribution Drawing Legend Page Appears Following Illustration Section

1965 CORONET 500 W1-P, W2-P 2 DOOR HARD TOP
VINYL TRIM
CODES P4B, P4Q, P4R, P4T, P4X, P4Y

MyMopar.com

1965 DODGE - A SERIES

Distribution Drawing Legend

See Illustration For Letter Identification

Letter	Description	Code
A	Panel, Door Trim	23-92-5
B	Arm Rest, Door, Front	23-76-3
	Center, Front Seat	23-76-34
	Door, Rear	23-76-59
	Quarter Panel	23-76-66
C	Headlining	23-86-3
D	Floor Cover, Front, Carpet	23-79-3
	Rubber	23-20-8
	Rear, Carpet	23-79-33
	Rubber	23-20-41
E	Panel, Shelf Trim	23-102-3
F	Panel, Cowl Trim	23-91-6
G	Visor	23-103-3
H	Panel, Luggage Compartment Front	23-96-3
J	Cover, Luggage Compartment Floor	23-20-29
K	Cover, Front Seat Cushion	23-108-5
L	Cover, Front Seat Back	23-108-16
M	Cover, Front Seat Hinge	23-108-84
N	Cover, Rear Seat Cushion	23-109-36
P	Cover, Rear Seat Back	23-109-4
Q	Cover, Rear Seat Cushion Bottom Panel	23-109-40
R	Weathercord, Door	23-113-2
	Hinge Pillar	23-113-25
	Lock Pillar	23-113-30
	w/Weatherstrip	23-66-33
S	Panel, Quarter Trim	23-101-3
T	Cover, Wheelhouse	23-96-8
U	Top Deck and Side Quarter	23-112-108
V	Curtain Folding Top Back	23-112-45
W	Cover, Center Pillar	23-99-4
X	Panel, Folding Top Well Pocket	23-112-153
Y	Cover, Tailgate Inside Panel	23-79-79
Z	Cover, Rear Seat Back Panel	23-109-5

MyMopar.com

BODY CODE	COLUMN LEGEND
	CORONET (AW1-L) (AW2-L)
W-11 (21)	2 D. Sedan
W-13 (41)	4 D. Sedan
W-56 (45)	Station Wagon (2 Seat)
W-83 (41)	4 D. Sedan (Taxi)
W-91 (21)	2 D. Sedan (Police)
W-93 (41)	4 D. Sedan (Police)
W-96 (45)	Station Wagon (2 Seat)
	CORONET 440 (AW1-H)
W-32 (23)	2 D. Hard Top
W-33 (41)	4 D. Sedan
W-76 (45)	Station Wagon (2 Seat)
	CORONET 440 (AW2-H)
W-32 (23)	2 D. Hard Top
W-35 (27)	Convertible
W-33 (41)	4 D. Sedan
W-76 (45)	Station Wagon (2 Seat)
W-77 (46)	Station Wagon (3 Seat)
	CORONET 500 (AW2-P)
W-42 (23)	2 D. Hard Top
	POLARA (AD2-L)
D-12 (23)	2 D. Hard Top
D-15 (27)	Convertible
D-13 (41)	4 D. Sedan
D-14 (43)	4 D. Hard Top
D-56 (45)	Station Wagon (2 Seat)
D-57 (46)	Station Wagon (3 Seat)
D-93 (41)	4 D. Sedan (Police)
	CUSTOM 880 (AD2-H)
D-32 (23)	2 D. Hard Top
D-35 (27)	Convertible
D-38 (42)	4 D. Sedan (6 Window)
D-34 (43)	4 D. Hard Top
D-76 (45)	Station Wagon (2 Seat)
D-77 (46)	Station Wagon (3 Seat)
	MONACO (AD2-P)
D-42 (23)	2 D. Hard Top

★ Indicates use as required.
⊟ Indicates parts not listed in any previous parts book.

Printed in U.S.A.
Prices and specifications subject to change without notice.
September 4, 1964.
MyMopar.com

CONVERTIBLE TOP COLOR LEGEND

0 Black 1 Blue 2 White

		Detroit	Los Angeles	Delaware	St. Louis
DODGE 117″					
W1-L	(Coronet)	4151-100001	4155-100001		4157-100001
W1-L	(Coronet Sta. Wgn.)	4551-100001	4555-100001		4557-100001
W1-H	(Coronet 440)	4351-100001	4355-100001		4357-100001
W1-H	(Coronet 440 Sta. Wgn.)	4751-100001	4755-100001		4757-100001
W2-L	(Coronet)	W151-100001	W155-100001		W157-100001
W2-L	(Coronet Sta. Wgn.)	W551-100001	W555-100001		W557-100001
W2-H	(Coronet 440)	W351-100001	W355-100001		W357-100001
W2-H	(Coronet 440 Sta. Wgn.)	W751-100001	W755-100001		W757-100001
W2-P	(Coronet 500)	W451-100001	W455-100001		W457-100001
DODGE 121.5″					
D2-L	(Polara)	D153-100001		D156-100001	
D2-L	(Polara Sta. Wgn.)	D553-100001		D556-100001	
D2-H	(Polara 880)	D353-100001		D356-100001	
D2-H	(Polara 880 Sta. Wgn.)	D753-100001		D756-100001	
D2-P	(Monaco)	D453-100001		D456-100001	

TRIM CODE	MODEL	MATERIAL Cloth	Vinyl	Leather	COLOR	6 WD.SED.	SED.	4D H.T	STA. WGN.	2D H.T	CV. CP.
L1B, K1B	W1-L, W2-L	★	★	-	Blue	-	★	-	-	-	-
L1Q, K1Q	W1-L, W2-L	★	★	-	Turquoise	-	★	-	-	-	-
L1R, K1R	W1-L, W2-L	★	★	-	Red	-	★	-	-	-	-
L1T, K1T, L2T, K2T	W1-L, W2-L	★	★	-	Tan	-	★	-	-	-	-
L4B, K4B	W1-L, W2-L	-	★	-	Blue	-	-	-	★	-	-
L4Q, K4Q	W1-L, W2-L	-	★	-	Turquoise	-	-	-	★	-	-
L4R, K4R	W1-L, W2-L	-	★	-	Red	-	-	-	★	-	-
L4T, K4T	W1-L, W2-L	-	★	-	Tan	-	-	-	★	-	-
L8T, K8T, T8T	W1-L, W2-L	-	★	-	Tan	-	★	-	-	-	-
L5B	W1-L, W2-L	-	★	-	Blue	-	★	-	-	-	-
L5R	W1-L, W2-L	-	★	-	Red	-	★	-	-	-	-
L5T	W1-L, W2-L	-	★	-	Tan	-	★	-	-	-	-
P1B	D2-P	-	★	-	Blue	-	-	-	-	★	-
P1Q	D2-P	-	★	-	Turquoise	-	-	-	-	★	-
P4R	D2-P	-	★	-	Red	-	-	-	-	★	-
P4T	D2-P	-	★	-	Tan	-	-	-	-	★	-
P4U	D2-P	-	★	-	Cordovan	-	-	-	-	★	-
P4X	D2-P	-	★	-	Black	-	-	-	-	★	-
P4W	D2-P	-	★	-	White	-	-	-	-	★	-
L1B, L3B, K1B	D2-L	★	★	-	Blue	-	★	★	-	★	-
L1Q, K1Q	D2-L	★	★	-	Turquoise	-	★	★	-	★	-
L1R, L3R, K1R	D2-L	★	★	-	Red	-	★	★	-	★	-
L1T, L3T, K1T	D2-L	★	★	-	Tan	-	★	★	-	★	-
L1Y, K1Y	D2-L	★	★	-	Gold	-	★	★	-	★	-
L2T, K2T	D2-L	★	★	-	Tan	-	★	-	-	-	-
L3X	D2-L	-	★	-	Black	-	-	★	-	-	-
L4B	D2-L	-	★	-	Blue	-	-	-	★	-	★
L4Q	D2-L	-	★	-	Turquoise	-	-	-	★	-	★
L4R	D2-L	-	★	-	Red	-	-	-	★	-	★
L4T	D2-L	-	★	-	Tan	-	-	-	★	-	★
L4Y	D2-L	-	★	-	Gold	-	-	-	★	-	★
L5B	D2-L	-	★	-	Blue	-	★	-	-	-	-
L5R	D2-L	-	★	-	Red	-	★	-	-	-	-
L5T	D2-L	-	★	-	Tan	-	★	-	-	-	-

★ Indicates use as required.
⊟ Indicates parts not listed in any previous parts book.

Printed in U.S.A.
Prices and specifications subject to change without notice.

MyMopar.com

TRIM CODE	MODEL	MATERIAL			COLOR	6WD. SED.	SED.	4D H.T	STA. WGN.	2D H.T	CV. CP.
		Cloth	Vinyl	Leather							
L8T, K8T	D2-L	-	★	-	Tan	-	★	-	-	-	-
L9B	D2-L	-	★	-	Blue	-	-	-	-	★	-
L9R	D2-L	-	★	-	Red	-	-	-	-	★	-
L9X	D2-L	-	★	-	Black	-	-	-	-	★	-
H1B	D2-H	-	★	-	Blue	★	-	-	-	-	-
H1Q	D2-H	-	★	-	Turquoise	★	-	-	-	-	-
H1R	D2-H	-	★	-	Red	★	-	-	-	-	-
H1T	D2-H	-	★	-	Tan	★	-	-	-	-	-
H1Y	D2-H	-	★	-	Gold	★	-	-	-	-	-
H4B	D2-H	-	★	-	Blue	★	-	★	★	★	★
H4Q	D2-H	-	★	-	Turquoise	-	-	★	★	★	★
H4R	D2-H	-	★	-	Red	★	-	★	★	★	★
H4T	D2-H	-	★	-	Tan	★	-	★	★	★	★
H4X	D2-H	-	★	-	Black	-	-	★	-	★	★
H4Y	D2-H	-	★	-	Gold	-	-	-	★	-	-
H1B	W1-H, W2-H	★	★	-	Blue	-	★	-	-	★	-
H1Q	W1-H, W2-H	★	★	-	Turquoise	-	★	-	-	★	-
H1R	W1-H, W2-H	★	★	-	Red	-	★	-	-	★	-
H1T	W1-H, W2-H	★	★	-	Tan	-	★	-	-	★	-
H4B	W1-H, W2-H	-	★	-	Blue	-	-	★	★	-	★
H4Q	W1-H, W2-H	-	★	-	Turquoise	-	-	★	★	-	★
H4R	W1-H, W2-H	-	★	-	Red	-	-	★	★	-	★
H4T	W1-H, W2-H	-	★	-	Tan	-	-	★	★	-	★
H5B	W1-H, W2-H	-	★	-	Blue	-	★	-	-	-	-
H5R	W1-H, W2-H	-	★	-	Red	-	★	-	-	-	-
H5T	W1-H, W2-H	-	★	-	Tan	-	★	-	-	-	-
P4B	W2-P	-	★	-	Blue	-	-	-	-	★	★
P4Q	W2-P	-	★	-	Turquoise	-	-	-	-	★	★
P4R	W2-P	-	★	-	Red	-	-	-	-	★	★
P4T	W2-P	-	★	-	Tan	-	-	-	-	★	★
P4X	W2-P	-	★	-	Black	-	-	-	-	★	★
P4Y	W2-P	-	★	-	Gold	-	-	-	-	★	★

NOTES

★ Indicates use as required.
B Indicates parts not listed in any previous parts book.

MyMopar.com

NOTE: RIGHT HAND AND LEFT HAND PARTS LISTED ON THE SAME LINE. Whenever right and left hand parts are identified by consecutive part numbers, they will be listed as in the following example: PANEL, Door Trim 3400-1 ARR
Interpreted, this indicates that Panel, right is Part 3400 ARR and Panel, left is Part No. 3401 ARR.

CODE	REMARKS	PER CAR	SED.	4D H.T	STA. WGN.	2D H.T	CV. CP.
23-71-1	CARPET, Floor Console Side and Rear						
	W2 (floor mounted shift)						
	(code P4B)	1	---- ---	---- ---	---- ---	*7301 AB8	*7301 AB8
	(code P4Q)	1	---- ---	---- ---	---- ---	7368 AQ8	7368 AQ8
	(code P4R)	1	---- ---	---- ---	---- ---	7368 AR7	7368 AR7
	(code P4T)	1	---- ---	---- ---	---- ---	7368 AT8	7368 AT8
	(code P4X)	1	---- ---	---- ---	---- ---	7368 AX8	7368 AX8
	(code P4Y)	1	---- ---	---- ---	---- ---	7368 AY3	7368 AY3
	Fastener (foundation)	★	---- ---	---- ---	---- ---	6001 560	6001 560
	COVER, Floor Console Side Front						
	W2-P (floor mounted shift) Left						
	(code P4B)	1	---- ---	---- ---	---- ---	6925 AB8	6925 AB8
	(code P4Q)	1	---- ---	---- ---	---- ---	6925 AQ8	6925 AQ8
	(code P4R)	1	---- ---	---- ---	---- ---	6925 AR7	6925 AR7
	(code P4T)	1	---- ---	---- ---	---- ---	6925 AT8	6925 AT8
	(code P4Y)	1	---- ---	---- ---	---- ---	6925 AY3	6925 AY3
	(code P4X)	1	---- ---	---- ---	---- ---	6925 AX8	6925 AX8
	PANEL, Floor Console Side						
	W2-P Right						
	(code P4B)	1	---- ---	---- ---	---- ---	6917 AB8	6917 AB8
	(code P4Q)	1	---- ---	---- ---	---- ---	6917 AQ8	6917 AQ8
	(code P4R)	1	---- ---	---- ---	---- ---	6917 AR7	6917 AR7
	(code P4T)	1	---- ---	---- ---	---- ---	6917 AT8	6917 AT8
	(code P4X)	1	---- ---	---- ---	---- ---	6917 AX8	6917 AX8
	(code P4Y)	1	---- ---	---- ---	---- ---	6917 AY3	6917 AY3
	Left						
	(code P4B)	1	---- ---	---- ---	---- ---	6920 AB8	6920 AB8
	(code P4Q)	1	---- ---	---- ---	---- ---	6920 AQ8	6920 AQ8
	(code P4R)	1	---- ---	---- ---	---- ---	6920 AR7	6920 AR7
	(code P4T)	1	---- ---	---- ---	---- ---	6920 AT8	6920 AT8
	(code P4X)	1	---- ---	---- ---	---- ---	6920 AX8	6920 AX8
	(code P4Y)	1	---- ---	---- ---	---- ---	6920 AY3	6920 AY3
	D2-L (panel)						
	(code L9B)	1	---- ---	---- ---	---- ---	*7286-7 AB8	*7286-7 AB8
	(code L9R)	1	---- ---	---- ---	---- ---	*7286-7 AR8	*7286-7 AR8
	(code L9X)	1	---- ---	---- ---	---- ---	*7286-7 AX8	*7286-7 AX8
	(cover)(front left)						
	(code L9B)	1	---- ---	---- ---	---- ---	6925 AB8	6925 AB8
	(code L9R)	1	---- ---	---- ---	---- ---	6925 AR8	6925 AR8
	(code L9X)	1	---- ---	---- ---	---- ---	6925 AX8	6925 AX8
	(cover)(side)						
	D2-L, D2-P (plastic)	1	---- ---	---- ---	---- ---	2572 543	2572 543
	D2-L (carpet)(side and rear)						
	(floor mtd. shift)						
	(code L9B)	1	---- ---	---- ---	---- ---	*7301 AB8	*7301 AB8
	(code L9R)	1	---- ---	---- ---	---- ---	*7301 AR8	*7301 AR8
	(code L9X)	1	---- ---	---- ---	---- ---	7368 AX8	7368 AX8

★ Indicates use as required.
⊟ Indicates parts not listed in any previous parts book.
April 1966, Supersedes Sept. 4, 1964.

MyMopar.com

Printed in U.S.A.
Prices and specifications subject to change without notice.
Right and left part numbers are on same line, first number is right, second number is left.
* Indicates change or addition.

CODE	REMARKS	PER CAR	SED.	4D H.T	STA. WGN.	2D H.T	CV. CP.
23-71-1	CARPET, Console Side Cover (formed)						
	D2-P						
	(code P1B)	1	---- ---	---- ---	---- ---	4434 AB8	
	(code P1Q)	1	---- ---	---- ---	---- ---	4434 AQ8	
	(code P4R)	1	---- ---	---- ---	---- ---	4434 AR7	
	(code P4T)	1	---- ---	---- ---	---- ---	4434 AT9	
	(code P4U)	1	---- ---	---- ---	---- ---	4434 AU8	
	(code P4X)	1	---- ---	---- ---	---- ---	4434 AX8	
	Fastener (foundation)	★	---- ---	---- ---	---- ---	⊟6001 560	
	CARPET, Floor Console Side						
	D2						
	Left						
	(code P1B)	1	---- ---	---- ---	---- ---	7392 AB8	
	(code P1Q)	1	---- ---	---- ---	---- ---	7392 AQ8	
	(code P4R)	1	---- ---	---- ---	---- ---	7392 AR7	
	(code P4T)	1	---- ---	---- ---	---- ---	7392 AT9	
	(code P4U)	1	---- ---	---- ---	---- ---	7392 AU8	
	(code P4X)	1	---- ---	---- ---	---- ---	7392 AX8	
	Front, Left						
	(code P1B)	1	---- ---	---- ---	---- ---	7389 AB8	
	(code P1Q)	1	---- ---	---- ---	---- ---	7389 AQ8	
	(code P4R)	1	---- ---	---- ---	---- ---	7389 AR7	
	(code P4T)	1	---- ---	---- ---	---- ---	7389 AT9	
	(code P4U)	1	---- ---	---- ---	---- ---	7389 AU8	
	(code P4X)	1	---- ---	---- ---	---- ---	7389 AX8	
	Side Right						
	(code P1B)	1	---- ---	---- ---	---- ---	7387 AB8	
	(code P1Q)	1	---- ---	---- ---	---- ---	7387 AQ8	
	(code P4R)	1	---- ---	---- ---	---- ---	7387 AR7	
	(code P4T)	1	---- ---	---- ---	---- ---	7387 AT9	
	(code P4U)	1	---- ---	---- ---	---- ---	7387 AU8	
	(code P4X)	1	---- ---	---- ---	---- ---	7387 AX8	
	D2-P						
	Side and Rear Left						
	(code P1B)	1	---- ---	---- ---	---- ---	7390 AB8	
	(code P1Q)	1	---- ---	---- ---	---- ---	7390 AQ8	
	(code P4R)	1	---- ---	---- ---	---- ---	7390 AR7	
	(code P4T)	1	---- ---	---- ---	---- ---	7390 AT9	
	(code P4U)	1	---- ---	---- ---	---- ---	7390 AU8	
	(code P4X)	1	---- ---	---- ---	---- ---	7390 AX8	
	Side (w/manual floor mounted trans.)						
	(code P1B)	1	---- ---	---- ---	---- ---	7383 AB8	
	(code P1Q)	1	---- ---	---- ---	---- ---	7383 AQ8	
	(code P4R)	1	---- ---	---- ---	---- ---	7383 AR7	
	(code P4T)	1	---- ---	---- ---	---- ---	7383 AT9	
	(code P4U)	1	---- ---	---- ---	---- ---	7383 AU8	
	(code P4X)	1	---- ---	---- ---	---- ---	7383 AX8	
23-71-3	LID, Console						
	W2-P						
	(code P4B)	1	---- ---	---- ---	---- ---	4460 AB4	4460 AB4
	(code P4Q)	1	---- ---	---- ---	---- ---	4460 AQ4	4460 AQ4
	(code P4R)	1	---- ---	---- ---	---- ---	4460 AR7	4460 AR7
	(code P4T)	1	---- ---	---- ---	---- ---	4460 AT6	4460 AT6
	(code P4X)	1	---- ---	---- ---	---- ---	4460 AX9	4460 AX9
	(code P4Y)	1	---- ---	---- ---	---- ---	4460 AW3	4460 AW3
	D2-L						
	(code L9B)	1	---- ---	---- ---	---- ---	*4460 AB4	*4460 AB4
	(code L9R)	1	---- ---	---- ---	---- ---	*4460 AR7	*4460 AR7
	(code L9X)	1	---- ---	---- ---	---- ---	*4460 AX9	*4460 AX9

★ Indicates use as required.
⊟ Indicates parts not listed in any previous parts book.
Right and left part numbers are on same line, first number is right, second number is left.
* Indicates change or addition.

Printed in U.S.A.
Prices and specifications subject to change without notice.
May 1965, Supersedes Sept. 4, 1964.

MyMopar.com

CODE	REMARKS	PER CAR	SED.	4D H.T	STA. WGN.	2D H.T	CV. CP.
23-71-3	LID, Console - Cont'd						
	D2-P						
	(code P1B)	1	---- ---	---- ---	---- ---	4460 AB8	
	(code P1Q)	1	---- ---	---- ---	---- ---	4460 AQ8	
	(code P4R)	1	---- ---	---- ---	---- ---	4460 AR5	
	(code P4T)	1	---- ---	---- ---	---- ---	4460 AT9	
	(code P4U)	1	---- ---	---- ---	---- ---	4460 AU8	
	(codes P4X, P4W)	1	---- ---	---- ---	---- ---	*4460 AX9	
23-71-7	CARPET, Floor Console						
	Floor Pan Filler Cover (formed)						
	W2						
	(code P4B)	1	---- ---	---- ---	---- ---	*4406 VB8	*4406 VB8
	(code P4Q)	1	---- ---	---- ---	---- ---	*4406 VQ8	*4406 VQ8
	(code P4R)	1	---- ---	---- ---	---- ---	⊟4406 VR6	⊟4406 VR6
	(code P4T)	1	---- ---	---- ---	---- ---	⊟4406 VT8	⊟4406 VT8
	(code P4X)	1	---- ---	---- ---	---- ---	⊟4406 VX8	⊟4406 VX8
	(code P4Y)	1	---- ---	---- ---	---- ---	⊟4406 VY8	⊟4406 VY8
	D2-L						
	(code L9B)	1	---- ---	---- ---	---- ---	*4406 VB8	*4406 VB8
	(code L9R)	1	---- ---	---- ---	---- ---	⊟4406 VR6	⊟4406 VR6
	(code L9X)	1	---- ---	---- ---	---- ---	⊟4406 VX8	⊟4406 VX8
23-76-9	BASE, Door and Quarter Arm Rest						
	W1, W2 (4D.)						
	(codes L1B, K1B, L4B, L5B, K4B)	1	---- ---	*1208-9 AB4			
	(codes L1Q, K1Q, L4Q, K4Q)	1	---- ---	⊟1208-9 AQ4			
	(codes L1R, K1R, L4R, L5R, K4R)	1	*1208-9 AR5				
	(codes L1T, K1T, L2T, K2T, L4T, L5T, K4T, L8T, K8T, T8T)	1	*1208-9 VT6				
	(short) (chrome)	1	*1208-9 VZ1	---- ---	*1208-9 VZ1		
	(long) (chrome)	1	---- ---	---- ---	---- ---	*1212-3 VZ1	*1212-3 VZ1
	D2-L (short) (chrome)	1	*1208-9 VZ1	*1208-9 VZ1	*1208-9 VZ1	*1208-9 VZ1	*1208-9 VZ1
	D2-H, D2-P (long) (chrome)	1	*1212-3 VZ1	*1212-3 VZ1	*1212-3 VZ1	*1212-3 VZ1	*1212-3 VZ1
	(quarter arm rest)						
	W1, W2 (2D) (short)						
	(codes L1B, K1B)	1	*1208-9 AB4				
	(codes L1Q, K1Q)	1	⊟1208-9 AQ4				
	(codes L1R, K1R)	1	*1208-9 AR5				
	(codes L1T, K1T)	1	*1208-9 VT6				
	W2-P (medium) (chrome)	1	---- ---	---- ---	---- ---	*1210-1 VZ1	
	D2-H, D2-P (medium) (chrome)	1	---- ---	---- ---	---- ---	*1210-1 VZ1	
23-76-11	PAD and PLATE, Front Door Arm Rest						
	W1, W2 (short)						
	(codes L1B, K1B, L5B, L4B, K4B)	1	1216-7 AB8	---- ---	1216-7 AB8		
	(codes H1B, H4B, H5B)	1	1216-7 AB4	---- ---	1216-7 AB4		
	(codes L1Q, K1Q, L4Q, K4Q)	1	1216-7 AQ8	---- ---	1216-7 AQ8		
	(codes H1Q, H4Q)	1	1216-7 AQ4	---- ---	1216-7 AQ4		
	(codes L1R, K1R, L5R, L4R, K4R)	1	1216-7 AR5	---- ---	1216-7 AR5		
	(codes H1R, H4R, H5R)	1	1216-7 AR8	---- ---	1216-7 AR8		
	(codes L1T, K1T, L2T, K2T, L8T, K8T, T8T, L5T, L4T, K4T)	1	1216-7 AT8	---- ---	1216-7 AT8		

★ Indicates use as required.
⊟ Indicates parts not listed in any previous parts book.

May 1965, Supersedes Sept. 4, 1964.

MyMopar.com

Printed in U.S.A.

Prices and specifications subject to change without notice.
Right and left part numbers are on same line, first number is right, second number is left.
* Indicates change or addition.

CODE	REMARKS	PER CAR	SED.	4D H.T	STA. WGN.	2D H.T	CV. CP.
23-76-11	PAD and PLATE, Front Door Arm Rest-Cont'd						
	W1, W2 (short)						
	(codes H1T, H4T, H5T)	1	1216-7 VT6	---- ---	1216-7 VT6		
	Screw (pad attaching)	4	161 904	---- ---	161 904		
	D2-L (short)						
	(w/o ash receiver)						
	(codes L1B, K1B, L3B, L4B, (L5B)	1	*1216-7 AB8	*1216-7 AB8	*1216-7 AB8	*1216-7 AB8	*1216-7 AB8
	(codes L1Q, K1Q, L4Q)	1	1216-7 AQ8	1216-7 AQ8	1216-7 AQ8	1216-7 AQ8	1216-7 AQ8
	(codes L1R, K1R, L3R, L4R, L5R)	1	*1216-7 AR8	*1216-7 AR8	*1216-7 AR8	*1216-7 AR8	*1216-7 AR8
	(codes L1T, K1T, L2T, K2T, L8T, K8T, L3T, L4T, L5T)	1	*1216-7 AT8	*1216-7 AT8	*1216-7 AT8	*1216-7 AT8	*1216-7 AT8
	(codes L1Y, K1Y, L4Y)	1	1216-7 AY3	1216-7 AY3	1216-7 AY3	1216-7 AY3	1216-7 AY3
	(codes K2A, L3X, L9X)	1	*1216-7 AX9	---- ---	---- ---	*1216-7 AX9	
	W1-H, W2-H (medium and long)						
	(w/o ash receiver)						
	(codes H1B, H4B)	1	---- ---	---- ---	---- ---	1222-3 AB4	1222-3 AB4
	(codes H1Q, H4Q)	1	---- ---	---- ---	---- ---	1222-3 AQ4	1222-3 AQ4
	(codes H1R, H4R)	1	---- ---	---- ---	---- ---	1222-3 AR8	1222-3 AR8
	(codes H1T, H4T)	1	---- ---	---- ---	---- ---	1222-3 VT6	1222-3 VT6
	W2-P (medium and long)						
	(code P4B)	1	---- ---	---- ---	---- ---	1222-3 AB4	1222-3 AB4
	(code P4Q)	1	---- ---	---- ---	---- ---	1222-3 AQ4	1222-3 AQ4
	(code P4R)	1	---- ---	---- ---	---- ---	1222-3 VR7	1222-3 VR7
	(code P4T)	1	---- ---	---- ---	---- ---	1222-3 VT6	1222-3 VT6
	(code P4X)	1	---- ---	---- ---	---- ---	1222-3 VX9	1222-3 VX9
	(code P4Y)	1	---- ---	---- ---	---- ---	1222-3 VW3	1222-3 VW3
	D2-H (medium and long)						
	(codes H1B, H4B)	1	1222-3 AB8	1222-3 AB8	1222-3 AB8	1222-3 AB8	1222-3 AB8
	(codes H1Q, H4Q)	1	1222-3 AQ8	1222-3 AQ8	1222-3 AQ8	1222-3 AQ8	1222-3 AQ8
	(codes H1R, H4R)	1	1222-3 AR8	1222-3 AR8	1222-3 AR8	1222-3 AR8	1222-3 AR8
	(codes H1T, H4T)	1	1222-3 AT5	1222-3 AT5	1222-3 AT5	1222-3 AT5	1222-3 AT5
	(codes H1Y, H4Y)	1	1222-3 AY3	---- ---	1222-3 AY3		
	(code H4X)	1	---- ---	---- ---	---- ---	1222-3 VX9	1222-3 VX9
	D2-P (medium and long)						
	(code P1B)	1	---- ---	---- ---	---- ---	1222-3 AB4	
	(code P1Q)	1	---- ---	---- ---	---- ---	1222-3 AQ4	
	(code P4R)	1	---- ---	---- ---	---- ---	1222-3 AR5	
	(code P4T)	1	---- ---	---- ---	---- ---	1222-3 AT5	
	(code P4U)	1	---- ---	---- ---	---- ---	1222-3 AU8	
	(code P4X)	1	---- ---	---- ---	---- ---	1222-3 VX9	
	(code P4W)	1	---- ---	---- ---	---- ---	1222-3 VW3	
23-76-16	NUT, Arm Rest Attaching						
	W1, W2, D2	4	1280 134	1280 134	1280 134	1280 134	1280 134
	Screw	4	162 090	162 090	162 090	162 090	162 090
23-76-18	ARM REST, Front Back Center						
	D2-H						
	(6 window sedan)						
	(code H4B)	1	6926 A4B	6926 A4B	6926 A4B	6926 A4B	6926 A4B
	(code H4Q)	1	---- ---	6926 A4Q	6926 A4Q	6926 A4Q	6926 A4Q
	(code H4R)	1	6926 A4R	6926 A4R	6926 A4R	6926 A4R	6926 A4R
	(code H4T)	1	6926 A4T	6926 A4T	6926 A4T	6926 A4T	6926 A4T
	(code H4X)	1	---- ---	6926 A4X	---- ---	6926 A4X	6926 A4X
	(code H4Y)	1	---- ---	---- ---	6926 A4Y		
23-76-28	LOCK BAR, Front Seat Back Center Arm Rest						
	D2-H (6 window sedan)	1	2270 102	2270 102	2270 102	2270 102	2270 102

★ Indicates use as required.
⊟ Indicates parts not listed in any previous parts book.
Right and left part numbers are on same line, first number is right, second number is left.
* Indicates change or addition.

MyMopar.com

Printed in U.S.A.
Prices and specifications subject to change without notice.
April 1966, Supersedes May 1965.

CODE	REMARKS	PER CAR	SED.	4D H.T	STA. WGN.	2D H.T	CV. CP.
23-76-34	COVER, Front Seat Back Center Arm Rest						
	D2-H						
	(code H4B)	1	6927 A4B	6927 A4B	6927 A4B	6927 A4B	6927 A4B
	(code H4Q)	1	---- ---	6927 A4Q	6927 A4Q	6927 A4Q	6927 A4Q
	(code H4R)	1	6927 A4R	6927 A4R	6927 A4R	6927 A4R	6927 A4R
	(code H4T)	1	6927 A4T	6927 A4T	6927 A4T	6927 A4T	6927 A4T
	(code H4X)	1	---- ---	6927 A4X	---- ---	6927 A4X	6927 A4X
	(code H4Y)	1	---- ---	---- ---	6927 A4Y		
23-76-63	PAD and PLATE, Rear Door Arm Rest (w/ash receiver)						
	W1, W2 (short)						
	(codes L1B, K1B, L5B, L4B, K4B)	1	1214-5 AB8	---- ---	1214-5 AB8		
	(codes H1B, H4B, H5B)	1	1214-5 AB4	---- ---	1214-5 AB4		
	(codes L1Q, K1Q, L4Q, K4Q)	1	1214-5 AQ8	---- ---	1214-5 AQ8		
	(codes H1Q, H4Q)	1	1214-5 AQ4	---- ---	1214-5 AQ4		
	(codes L1R, K1R, L5R, L4R, K4R)	1	1214-5 AR5	---- ---	1214-5 AR5		
	(codes H1R, H4R, H5R)	1	1214-5 AR8	---- ---	1214-5 AR8		
	(codes L1T, K1T, L2T, K2T, L8T, K8T, T8T, L5T, L4T, K4T)	1	1214-5 AT8	---- ---	1214-5 AT8		
	(codes H1T, H4T, H5T)	1	1214-5 VT6	---- ---	1214-5 VT6		
	D2 (short)						
	(codes L1B, L3B, L4B, L5B, L6B, L9B, K1B)	1	*1214-5 AB8	*1214-5 AB8	*1214-5 AB8		
	(codes L1Q, L4Q, L6Q, K1Q)	1	*1214-5 AQ8	*1214-5 AQ8	*1214-5 AQ8		
	(codes L1R, L3R, K1R, L4R, L5R, L6R)	1	*1214-5 AR8	*1214-5 AR8	*1214-5 AR8		
	(codes L1T, L3T, K1T, L4T, L5T, L6T)	1	*1214-5 AT8	*1214-5 AT8	*1214-5 AT8		
	(codes L1Y, K1Y, L4Y)	1	*1214-5 AY3	*1214-5 AY3	*1214-5 AY3		
	(codes L2A, K2A, K8A, L8A)	1	⊟1214-5 AX9				
	Screw (pad attaching)	4	* 161 904	* 161 904	* 161 904		
	D2-H (6 window sedan) (w/ash receiver)						
	(codes H1B, H4B)	1	*1224-5 AB8	*1224-5 AB8	*1224-5 AB8		
	(codes H1Q, H4Q)	1	*1224-5 AQ8	*1224-5 AQ8	*1224-5 AQ8		
	(codes H1R, H4R)	1	*1224-5 AR8	*1224-5 AR8	*1224-5 AR8		
	(codes H1T, H4T)	1	*1224-5 AT8	*1224-5 AT8	*1224-5 AT8		
	(codes H1Y, H4Y)	1	*1224-5 AY3	---- ---	*1224-5 AY3		
	(code H4X)	1	---- ---	*1224-5 VX9			
23-76-76	PAD and PLATE, Rear Quarter Arm Rest (w/ash receiver)						
	D2-L (short)						
	(codes L1B, L9B, L4B)	1	---- ---	---- ---	---- ---	*1214-5 AB8	
	(code L1Q)	1	---- ---	---- ---	---- ---	1214-5 AQ8	
	(codes L1R, L9R, L4R)	1	---- ---	---- ---	---- ---	*1214-5 AR8	
	(codes L1T, L4T)	1	---- ---	---- ---	---- ---	*1214-5 AT8	
	(code L1Y)	1	---- ---	---- ---	---- ---	*1214-5 AY3	
	(code L9X)	1	---- ---	---- ---	---- ---	*1214-5 VX9	
	D2- (w/ash receiver)						
	(code H4B)	1	---- ---	---- ---	---- ---	*1224-5 AB8	
	(code H4Q)	1	---- ---	---- ---	---- ---	*1224-5 AQ8	
	(code H4R)	1	---- ---	---- ---	---- ---	*1224-5 AR8	
	(code H4T)	1	---- ---	---- ---	---- ---	*1224-5 AT8	

★ Indicates use as required.
⊟ Indicates parts not listed in any previous parts book.

MyMopar.com

Printed in U.S.A.
Prices and specifications subject to change without notice.
Right and left part numbers are on same line, first number is right, second number is left.
* Indicates change or addition.

CODE	REMARKS	PER CAR	SED.	4D H.T	STA. WGN.	2D H.T	CV. CP.
23-76-76	PAD and PLATE, Rear Quarter Arm Rest - Cont'd						
	D2 (w/ash receiver)						
	(code H4X)	1	---- ---	---- ---	---- ---	1224-5 VX9	
	(code P1B)	1	---- ---	---- ---	---- ---	1224-5 AB4	
	(code P1Q)	1	---- ---	---- ---	---- ---	1224-5 AQ4	
	(code P4R)	1	---- ---	---- ---	---- ---	*1224-5 AR5	
	D2 (medium)						
	(code P4X)	1	---- ---	---- ---	---- ---	1222-3 VX9	
	(code P1B)	1	---- ---	---- ---	---- ---	1222-3 AB4	
	(code P1Q)	1	---- ---	---- ---	---- ---	1222-3 AQ4	
	(code P4R)	1	---- ---	---- ---	---- ---	1222-3 AR5	
	(code P4T)	1	---- ---	---- ---	---- ---	1222-3 AT5	
	(code P4U)	1	---- ---	---- ---	---- ---	1222-3 AU8	
	(code P4W)	1	---- ---	---- ---	---- ---	1222-3 VW3	
	(w/ash receiver)						
	W1, W2 (short)						
	(codes L1B, K1B, H1B)	1	1214-5 AB8				
	(codes L1Q, K1Q, H1Q)	1	1214-5 AQ8				
	(codes L1R, K1R, H1R)	1	1214-5 AR5				
	(codes L1T, K1T, L2T, K2T, L8T, K8T)	1	1214-5 AT8				
	W2-P (medium)						
	(code P4B)	1	---- ---	---- ---	---- ---	*1224-5 AB4	
	(code P4Q)	1	---- ---	---- ---	---- ---	*1224-5 AQ4	
	(code P4R)	1	---- ---	---- ---	---- ---	*1224-5 AR7	
	(code P4Y)	1	---- ---	---- ---	---- ---	*1224-5 AW3	
	Screw (pad attaching)	4	161 904	---- ---	---- ---	161 904	
23-77-3	STRAP, Center Pillar Assist						
	W1-L, W2-L						
	(code T8T)	2	4312 AT6				
	Bolt	2	*6025 693				
23-77-17	SPACER, Center Pillar Assist Strap Mldg.						
	W1-L, W2-L						
	(code T8T)	2	2292 201				
	Bolt	2	*6025 693				
	Eyelet	2	6000 272				
23-78-2	BUTTON, Seat Back Tufting						
	W1-L, W2-L						
	(code L1B)	4	4358 AB8				
	(code L1Q)	4	4358 AQ8				
	(code L1T)	4	4358 AT8				
	D2-H						
	(code H1B)	18	4323 AB4				
	(code H1Q)	18	4323 AQ4				
	(code H1R)	18	4483 AR7				
	(code H1T)	18	4483 AT6				
	(code H1Y)	18	4483 AY3				
	(seat back medallion)						
	(2nd seat)	4	---- ---	2522 169	2522 169	2522 169	2522 169
	(3rd seat)	2	---- ---	---- ---	2522 169		
23-79-3	CARPET, Front Floor						
	W1-H, W2-H						
	(codes H1B, H4B, H5B)	1	*2807 530	---- ---	*2807 530	*2807 530	*2807 530
	(codes H1Q, H4Q)	1	1730 VQ8	---- ---	1730 VQ8	1730 VQ8	1730 VQ8
	(codes H1T, H4T, H5T)	1	1730 VT8	---- ---	1730 VT8	1730 VT8	1730 VT8
	(codes H1R, H4R)	1	1730 AR7				

★ Indicates use as required.
B Indicates parts not listed in any previous parts book.
Right and left part numbers are on same line, first number is right, second number is left.
* Indicates change or addition.

MyMopar.com

Printed in U.S.A.
Prices and specifications subject to change without notice.
April 1966, Supersedes May 1965.

CODE	REMARKS	PER CAR	SED.	4D H.T	STA. WGN.	2D H.T	CV. CP.
23-79-3	CARPET, Front Floor - Cont'd						
	W1, W2 (floor-mounted shift)						
	(codes L1R, L4R, L5R, H1R, H5R, H4R)	1	1734 AR7	---- ---	1734 AR7	1734 AR7	1734 AR7
	(codes H1B, H5B, H4B)	1	1734 VB8	---- ---	1734 VB8	1734 VB8	1734 VB8
	(codes H1Q, H4Q)	1	1734 VQ8	---- ---	1734 VQ8	1734 VQ8	1734 VQ8
	(codes H1T, H5T, H4T)	1	1734 VT8	---- ---	1734 VT8	1734 VT8	1734 VT8
	W2-P (bucket seat w/console)						
	(code P4B)	1	---- ---	---- ---	---- ---	1748 VB8	1748 VB8
	(code P4Q)	1	---- ---	---- ---	---- ---	1748 VQ8	1748 VQ8
	(code P4T)	1	---- ---	---- ---	---- ---	1748 VT8	1748 VT8
	(code P4R)	1	---- ---	---- ---	---- ---	1748 AR7	1748 AR7
	(code P4Y)	1	---- ---	---- ---	---- ---	1748 AY3	1748 AY3
	(code P4X)	1	---- ---	---- ---	---- ---	1748 AX8	1748 AX8
	W2-P (bucket seat w/console and floor shift)						
	(code P4B)	1	---- ---	---- ---	---- ---	1749 VB8	1749 VB8
	(code P4Q)	1	---- ---	---- ---	---- ---	1749 VQ8	1749 VQ8
	(code P4R)	1	---- ---	---- ---	---- ---	1749 AR7	1749 AR7
	(code P4T)	1	---- ---	---- ---	---- ---	1749 VT8	1749 VT8
	(code P4Y)	1	---- ---	---- ---	---- ---	1749 AY3	1749 AY3
	(code P4X)	1	---- ---	---- ---	---- ---	1749 AX8	1749 AX8
	D2-L (column mounted shift)						
	(codes L1B, L3B, L4B, L5B, L6B)	1	*1731 AB8	*1731 AB8	*1731 AB8	*1731 AB8	*1731 AB8
	(codes L1Q, L4Q, L5Q, L6Q)	1	*1731 AQ8	*1731 AQ8	*1731 AQ8	*1731 AQ8	*1731 AQ8
	(codes L1R, L3R, L4R, L5R, L6R)	1	*1731 AR8	*1731 AR8	*1731 AR8	*1731 AR8	*1731 AR8
	(codes L1T, L3T, L2T, L8T, L4T, L5T, L6T	1	*1731 AT8	*1731 AT8	*1731 AT8	*1731 AT8	*1731 AT8
	(codes L1Y, L4Y, L5Y)	1	1731 AY8	1731 AY8	1731 AY8	1731 AY8	1731 AY8
	(codes L3X, L4X, K2A, L8A, L6X)	1	*1731 AX8	*1731 AX8			
	D2-L (floor mounted)						
	(codes L1B, L3B, L4B, L5B, L6B)	1	*1732 AB8	*1732 AB8	*1732 AB8	*1732 AB8	*1732 AB8
	(codes L1Q, L4Q, L5Q, L6Q)	1	*1732 AQ8	*1732 AQ8	*1732 AQ8	*1732 AQ8	*1732 AQ8
	(codes L1R, L3R, L4R, L5R, L6R)	1	*1732 AR8	*1732 AR8	*1732 AR8	*1732 AR8	*1732 AR8
	(codes L1T, L3T, L2T, L8T, L4T, L5T, L6T)	1	*1732 AT8	*1732 AT8	*1732 AT8	*1732 AT8	*1732 AT8
	(codes L1Y, L4Y, L5Y)	1	1732 AY8	1732 AY8	1732 AY8	1732 AY8	1732 AY8
	(codes L3X, L4X, L2A, K2A, L8A, L6X)	1	*1732 AX8	*1732 AX8			
	D2-L						
	(code L9B)	1	---- ---	---- ---	---- ---	*1761 AB8	
	(code L9R)	1	---- ---	---- ---	---- ---	*1761 AR8	
	(code L9X)	1	---- ---	---- ---	---- ---	*1761 AX8	
	D2-L (floor mounted shift)						
	(code L9B)	1	---- ---	---- ---	---- ---	*1737 AB8	
	(code L9R)	1	---- ---	---- ---	---- ---	⊟1737 AR8	
	(code L9X)	1	---- ---	---- ---	---- ---	*1737 AX8	
	D2-H						
	(codes H1B, H4B)	1	1731 AB8	1731 AB8	1731 AB8	1731 AB8	1731 AB8
	(codes H1Q, H4Q)	1	1731 AQ8	1731 AQ8	1731 AQ8	1731 AQ8	1731 AQ8
	(codes H1R, H4R)	1	1731 AR8	1731 AR8	1731 AR8	1731 AR8	1731 AR8
	(codes H1T, H4T)	1	1731 AT8	1731 AT8	1731 AT8	1731 AT8	1731 AT8
	(codes H1Y, H4Y)	1	1731 AY8	---- ---	1731 AY8		
	(code H4X)	1	---- ---	---- ---	---- ---	1731 AX8	1731 AX8

★ Indicates use as required.
⊟ Indicates parts not listed in any previous parts book.
May 1965, Supersedes Sept. 4, 1964.

MyMopar.com

Printed in U.S.A.
Prices and specifications subject to change without notice.
Right and left part numbers are on same line, first number is right, second number is left.
* Indicates change or addition.

CODE	REMARKS	PER CAR	SED.	4D H.T	STA. WGN.	2D H.T	CV. CP.
23-79-3	CARPET, Front Floor-Cont'd						
	D2-H (floor mounted shift)						
	(codes H1B, H4B)	1	1732 AB8	1732 AB8	1732 AB8	1732 AB8	1732 AB8
	(codes H1Q, H4Q)	1	1732 AQ8	1732 AQ8	1732 AQ8	1732 AQ8	1732 AQ8
	(codes H1R, H4R)	1	1732 AR8	1732 AR8	1732 AR8	1732 AR8	1732 AR8
	(codes H1T, H4T)	1	1732 AT8	1732 AT8	1732 AT8	1732 AT8	1732 AT8
	(codes H1Y, H4Y)	1	1732 AY8	---- ---	1732 AY8		
	(code H4X)	1	---- ---	---- ---	---- ---	1732 AX8	1732 AX8
	D2-P						
	(code P1B)	1	---- ---	---- ---	---- ---	1761 AB8	
	(code P1Q)	1	---- ---	---- ---	---- ---	1761 AQ8	
	(code P4R)	1	---- ---	---- ---	---- ---	1761 AR7	
	(code P4T)	1	---- ---	---- ---	---- ---	1761 AT9	
	(code P4U)	1	---- ---	---- ---	---- ---	1761 AU8	
	(code P4X)	1	---- ---	---- ---	---- ---	1761 AX8	
	D2-P (floor mounted shift)						
	(code P1B)	1	---- ---	---- ---	---- ---	*1737 AB8	
	(code P1Q)	1	---- ---	---- ---	---- ---	1737 AQ8	
	(code P4R)	1	---- ---	---- ---	---- ---	1737 AR7	
	(code P4T)	1	---- ---	---- ---	---- ---	1737 AT9	
	(code P4U)	1	---- ---	---- ---	---- ---	1737 AU8	
	(code P4X)	1	---- ---	---- ---	---- ---	1737 AX8	
23-79-33	CARPET, Rear Floor						
	W1-L, W1-H, W2-L, W2-H						
	(codes L1B, L4B, L5B, H1B, H5B, H4B)	1	1703 AB8	---- ---	1703 AB8		
	(codes L1Q, L4Q, H1Q, H4Q)	1	1703 AQ8	---- ---	1703 AQ8		
	(codes L1R, L4R, H1R, H5R, H4R)	1	1703 AR7	---- ---	1703 AR7		
	(codes L1T, L2T, L8T, L4T, L5T, H1T, H5T, H4T)	1	1703 AT8	---- ---	1703 AT8		
	W1, W2 (center floor pan cover panel insert)						
	(codes L4B, K4B, H4B)	1	---- ---	---- ---	1800 AB8		
	(codes L4Q, K4Q, H4Q)	1	---- ---	---- ---	1800 AQ8		
	(codes L4R, K4R, H4R)	1	---- ---	---- ---	1800 AR7		
	(codes L4T, K4T, H4T)	1	---- ---	---- ---	1800 AT8		
	W1, W2 (rear floor pan insert)						
	(codes L4B, K4B, H4B)	1	---- ---	---- ---	1801 AB8		
	(codes L4Q, K4Q, H4Q)	1	---- ---	---- ---	1801 AQ8		
	(codes L4R, K4R, H4R)	1	---- ---	---- ---	1801 AR7		
	(codes L4T, K4T, H4T)	1	---- ---	---- ---	1801 AT8		
	W1, W2 (rear floor pan cover panel insert) (2 seater only)						
	(codes L4B, K4B, H4B)	1	---- ---	---- ---	1802 AB8		
	(code H4Q)	1	---- ---	---- ---	1802 AQ8		
	(codes L4R, K4R, H4R)	1	---- ---	---- ---	1802 AR7		
	(codes L4T, K4T, H4T)	1	---- ---	---- ---	1802 AT8		
	(code H4Y)	1	---- ---	---- ---	1802 AY8		
	Screw and Washer (attaching)	★	---- ---	---- ---	⊟6024 678		
	W1, W2 (floor pan kick-up front trim) (paint as required)	1	---- ---	---- ---	⊟2292 901		

★ Indicates use as required.
⊟ Indicates parts not listed in any previous parts book. Right and left part numbers are on same line, first number is right, second number is left.
* Indicates change or addition.

MyMopar.com

Printed in U.S.A.
Prices and specifications subject to change without notice.
May 1965, Supersedes Sept. 4, 1964.

CODE	REMARKS	PER CAR	SED.	4D H.T	STA. WGN.	2D H.T	CV. CP.
23-79-33	CARPET, Rear Floor-Cont'd						
	W1-H, W2-H						
	(codes H1B, H4B)	1	---- ---	---- ---	---- ---	1705 AB8	1704 AB8
	(codes H1Q, H4Q)	1	---- ---	---- ---	---- ---	1705 AQ8	1704 AQ8
	(codes H1R, H4R)	1	---- ---	---- ---	---- ---	1705 AR7	1704 AR7
	(codes H1T, H4T)	1	---- ---	---- ---	---- ---	1705 AT8	1704 AT8
	W2-P (bucket seat w/console)						
	(code P4B)	1	---- ---	---- ---	---- ---	1744 AB8	1745 AB8
	(code P4Q)	1	---- ---	---- ---	---- ---	1744 AQ8	1745 AQ8
	(code P4R)	1	---- ---	---- ---	---- ---	1744 AR7	1745 AR7
	(code P4X)	1	---- ---	---- ---	---- ---	1744 AX8	1745 AX8
	(code P4T)	1	---- ---	---- ---	---- ---	1744 AT8	1745 AT8
	(code P4Y)	1	---- ---	---- ---	---- ---	1744 AY3	1745 AY3
	D2-L, D2-H (rear floor pan cover panel) (2 seater)						
	(codes L4B, H4B)	1	---- ---	---- ---	1819 AB8		
	(codes L4R, H4R)	1	---- ---	---- ---	1819 AR7		
	(codes L4T, H4T)	1	---- ---	---- ---	1819 AT8		
	(codes L4Q, H4Q)	1	---- ---	---- ---	1819 AQ8		
	(codes L4Y, H4Y)	1	---- ---	---- ---	1819 AY8		
	D2-L						
	(code L9B)	1	---- ---	---- ---	---- ---	1741 AB8	*1741 AB8
	(code L9R)	1	---- ---	---- ---	---- ---	1741 AR8	*1741 AR8
	(code L9X)	1	---- ---	---- ---	---- ---	1741 AX8	*1741 AX8
	D2-L, D2-H (center and rear floor cover panel) (vinoleum)						
	(codes L4B, H4B)	1	---- ---	---- ---	1810 AB8		
	(codes L4Q, H4Q)	1	---- ---	---- ---	1810 AQ8		
	(codes L4R, H4R)	1	---- ---	---- ---	1810 AR7		
	(codes L4T, H4T)	1	---- ---	---- ---	1810 AT8		
	(codes L4Y, H4Y)	1	---- ---	---- ---	1810 AY8		
	Screw (attaching)	2	---- ---	---- ---	6024 678		
	D2						
	(codes L1B, L3B, L4B, L5B, L6B, H1B, H4B)	1	1721 AB8	1721 AB8	1721 AB8	1720 AB8	1720 AB8
	(codes L1Q, L4Q, L6Q, H4Q, H1Q)	1	1721 AQ8	1721 AQ8	1721 AQ8	1720 AQ8	1720 AQ8
	(codes L1R, L3R, L4R, L5R, L6R, H1R, H4R)	1	1721 AR8	1721 AR8	1721 AR8	1720 AR8	1720 AR8
	(codes L1T, L3T, L2T, L8T, L4T, L5T, L6T, H1T, H4T)	1	1721 AT8	1721 AT8	1721 AT8	1720 AT8	1720 AT8
	(codes L1Y, L4Y, H1Y, H4Y)	1	1721 AY8	1721 AY8	1721 AY8	1720 AY8	1720 AY8
	(codes L3X, L4X, H4X)	1	---- ---	*1721 AX8	---- ---	*1720 AX8	*1720 AX8
	(code K2A)	1	1721 AX8				
	D2 (axle kick-up rear floor pan panel) (paint as required)	1	---- ---	---- ---	4319 AT8		
	(axle kick-up center floor pan panel) (paint as required)	1	---- ---	---- ---	4320 AT8		
	D2-L, D2-H (rear floor well side cover)						
	(codes L4B, H4B)	1	---- ---	---- ---	2088-9 AB4		
	(codes L4Q, H4Q)	1	---- ---	---- ---	2086-7 AQ4		
	(codes L4R, H4R)	1	---- ---	---- ---	2088-9 AR7		
	(codes L4T, H4T)	1	---- ---	---- ---	2088-9 AT6		
	(codes L4Y, H4Y)	1	---- ---	---- ---	2086-7 AY3		

★ Indicates use as required.
⊟ Indicates parts not listed in any previous parts book.
April 1966, Supersedes May 1965.

Printed in U.S.A.
Prices and specifications subject to change without notice.
Right and left part numbers are on same line, first number is right, second number is left.
* Indicates change or addition.

MyMopar.com

CODE	REMARKS	PER CAR	SED.	4D H.T	STA. WGN.	2D H.T	CV. CP.
23-79-33	CARPET, Rear Floor - Cont'd						
	D2-P						
	(code P1B)	1	---- ---	---- ---	---- ---	1700 AB8	
	(code P1Q)	1	---- ---	---- ---	---- ---	1700 AQ8	
	(code P4R)	1	---- ---	---- ---	---- ---	1700 AR7	
	(code P4T)	1	---- ---	---- ---	---- ---	1700 AT9	
	(code P4U)	1	---- ---	---- ---	---- ---	1700 AU8	
	(code P4X)	1	---- ---	---- ---	---- ---	1700 AX8	
23-79-62	INSERT, Second Seat Back Support						
	D2						
	(codes L4B, M4B)	1	---- ---	---- ---	1825 AB8		
	(codes L4R, M4R)	1	---- ---	---- ---	1825 AR7		
	(codes L4T, M4T)	1	---- ---	---- ---	1825 AT8		
	(codes L4Q, M4Q)	1	---- ---	---- ---	1825 AQ8		
	(codes M4Y, L4Y)	1	---- ---	---- ---	1825 AY8		
23-79-64	COVER, Luggage Compartment Spare Tire						
	D2-P	1	---- ---	---- ---	---- ---	2581 611	
	D2-L, D2-H (spare tire)						
	UP TO Serial No. 207652						
	(codes L4B, H4B)	1	---- ---	---- ---	*3584 AB4		
	(codes L4Q, H4Q)	1	---- ---	---- ---	*3584 AQ4		
	(codes L4R, H4R)	1	---- ---	---- ---	*3584 AR7		
	(codes L4T, H4T)	1	---- ---	---- ---	*4181 AT6		
	(codes L4Y, H4Y)	1	---- ---	---- ---	4498 AY3		
	AFTER Serial No. 207652						
	(codes L4B, H4B)	1	---- ---	---- ---	*3584 AB4		
	(codes L4Q, H4Q)	1	---- ---	---- ---	*3584 AQ4		
	(codes L4R, H4R)	1	---- ---	---- ---	*3584 AR7		
	(codes L4T, H4T)	1	---- ---	---- ---	4181 AT6		
	(codes L4Y, H4Y)	1	---- ---	---- ---	*3584 AY3		
23-79-67	HANDLE, Spare Tire Cover						
	D2	1	---- ---	---- ---	4183 AX9		
23-79-68	GROMMET, Spare Tire Cover Latching						
	D2	2	---- ---	---- ---	2656 731		
23-79-79	INSERT, Tailgate Access Hole Cover						
	W1, W2						
	(codes L4B, K4B, H4B)	1	---- ---	---- ---	1803 AB8		
	(codes L4Q, K4Q, H4Q)	1	---- ---	---- ---	1803 AQ8		
	(codes L4R, K4R, H4R)	1	---- ---	---- ---	1803 AR7		
	(codes L4T, K4T)	1	---- ---	---- ---	1803 AT8		
	Screw and Washer	10	---- ---	---- ---	6024 678		
	D1, D2						
	(codes L4B, H4B)	1	---- ---	---- ---	1823 AB8		
	(codes L4Q, H4Q)	1	---- ---	---- ---	1823 AQ8		
	(codes L4R, H4R)	1	---- ---	---- ---	1823 AR7		
	(codes L4T, H4T)	1	---- ---	---- ---	1823 AT8		
	(codes L4Y, H4Y)	1	---- ---	---- ---	1823 AY8		
	D2 (tailgate inside panel)						
	(codes L4B, H4B)	1	---- ---	---- ---	1820 AB8		
	(codes L4Q, H4Q)	1	---- ---	---- ---	1820 AQ8		
	(codes L4R, H4R)	1	---- ---	---- ---	1820 AR7		
	(codes L4T, H4T)	1	---- ---	---- ---	1820 AT8		
	(codes L4Y, H4Y)	1	---- ---	---- ---	1820 AY8		

★ Indicates use as required.
⊟ Indicates parts not listed in any previous parts book.
Right and left part numbers are on same line, first number is right, second number is left.
* Indicates change or addition.

MyMopar.com

Printed in U.S.A.
Prices and specifications subject to change without notice.
April 1966, Supersedes May 1965.

CODE	REMARKS	PER CAR	SED.	4D H.T	STA. WGN.	2D H.T	CV. CP.
23-79-79	INSERT, Tailgate Access Hole Cover - Cont'd						
	D2 (tailgate sill to tailgate cover panel)						
	(codes L4B, H4B)	1	---- ---	---- ---	1824 AB8		
	(codes L4Q, H4Q)	1	---- ---	---- ---	1824 AQ8		
	(codes L4R, H4R)	1	---- ---	---- ---	1824 AR7		
	(codes L4T, H4T)	1	---- ---	---- ---	1824 AT8		
	(codes L4Y, H4Y)	1	---- ---	---- ---	1824 AY8		
23-81-3	HANDLE, Rear Door Pull-To						
	W1-L, W2-L	1	1697 413				
23-82-30	HOOK, Coat Hanger						
	W1, W2	2	2581 908	---- ---	2581 908	2581 908	2581 908
	D2	2	2581 908	---- ---	2581 908	2581 908	2581 908
23-82-39	BRACKET, Coat Hook Support						
	W1, W2	2	2481 175	---- ---	2482 876	2482 876	
	D2	2	---- ---	2527 098	2573 143	2527 098	
23-84-3	PAD, Instrument Panel Trim						
	W1, W2 LHD.						
	(blue)	1	4219 AB8	---- ---	4219 AB8	4219 AB8	4219 AB8
	(turquoise)	1	4219 AQ8	---- ---	4219 AQ8	4219 AQ8	4219 AQ8
	(red)	1	4219 AR7	---- ---	4219 AR7	4219 AR7	4219 AR7
	(tan)	1	4219 AT8	---- ---	4219 AT8	4219 AT8	4219 AT8
	(gold)	1	4219 AY8	---- ---	4219 AY8	4219 AY8	4219 AY8
	(black)	1	---- ---	---- ---	---- ---	4219 AX8	4219 AX8
	P1B)	1	4259 AB8	4259 AB8	4259 AB8	4259 AB8	4259 AB8
	(codes L1B, K1B, L3B, L4B, L5B, L6B, L9B, H1B, H4B, P1B)	1	4259 AB8	4259 AB8	4259 AB8	4259 AB8	4259 AB8
	(codes L1Q, K1Q, L4Q, H1Q, H4Q, P1Q, L6Q)	1	4259 AQ8	4259 AQ8	4259 AQ8	4259 AQ8	4259 AQ8
	(codes L1R, K1R, L3R, L4R, L5R, H1R, H4R, P4R, L6R, L9R)	1	4259 AR7	4259 AR7	4259 AR7	4259 AR7	4259 AR7
	(codes L1T, K1T, L2T, K2T, L3T, L4T, L5T, L6T, L8T, K8T, H1T, H4T)	1	4259 AT8	4259 AT8	4259 AT8	4259 AT8	4259 AT8
	(code P4T)	1	---- ---	---- ---	---- ---	4259 AT9	
	(code P4U)	1	---- ---	---- ---	---- ---	4259 AU9	
	(codes L2A, K2A, L8A, K8A, L3X, L4X, H4X, P4X, P4W, L9X)	1	---- ---	---- ---	---- ---	4259 AX8	
	(codes L1Y, K1Y, L4Y, H1Y, H4Y)	1	4259 AY8	4259 AY8	4259 AY8	4259 AY8	4259 AY8
	Fastener	★	6024 274	6024 274	6024 274	6024 274	6024 274
	Stud and Retainer (instrument panel pad end attaching)	2	6000 700				
	D2 RHD.						
	(codes L1B, K1B, L4B, L5B, H1B, H4B)	1	4262 AB8	4262 AB8	4262 AB8	---- ---	4262 AB8
	(codes L1R, K1R, L4R, L5R, H1R, H4R)	1	4262 AR7	4262 AR7	4262 AR7	---- ---	4262 AR7
	(codes L1T, K1T, L2T, K2T, L8T, K8T, L4T, L5T, H1T, H4T)	1	4262 AT8	4262 AT8	4262 AT8	---- ---	4262 AT8
	Fastener	6	6008 222	6008 222	6008 222	---- ---	6008 222

★ Indicates use as required.
B Indicates parts not listed in any previous parts book.
April 1966, Supersedes May 1965.

Printed in U.S.A.
Prices and specifications subject to change without notice.
Right and left part numbers are on same line, first number is right, second number is left.
* Indicates change or addition.

MyMopar.com

CODE	REMARKS	PER CAR	SED.	4D H.T	STA. WGN.	2D H.T	CV. CP.
23-84-11	CLIP, Instrument Panel to Trim Pad						
	W1, W2	8	2571 275	2571 275	2571 275	2571 275	2571 275
	(retainer)	4	2571 953	2571 953	2571 953	2571 953	2571 953
23-86-2	COVER, Roof Outside (vinyl)						
	W1, W2						
	(black)	1	---- ---	---- ---	---- ---	6109 VW1	
	(white)	1	---- ---	---- ---	---- ---	6109 VX8	
	D2						
	(black)	1	---- ---	*7174 AX8	---- ---	7199 AX8	
	(white)	1	---- ---	*7174 AW1	---- ---	7199 AW1	
23-86-3	HEADLINING and LISTINGS						
	W1, W2						
	(codes L1B, K1B, L5B, H1B, H5B, P4B)	1	7130 AB3	---- ---	---- ---	7146 AB3	
	(codes L1Q, K1Q, H1Q, P4Q)	1	7130 AQ3	---- ---	---- ---	7146 AQ3	
	(codes L1R, K1R, L5R, H1R, H4R, P4R)	1	7130 AW2	---- ---	---- ---	7146 AW2	
	(codes L1T, K1T, L2T, K2T, L8T, K8T, T8T, L5T, H1T, H5T, P4T)	1	7130 AT3	---- ---	---- ---	7146 AT3	
	(codes H1Y, H4Y, P4Y)	1	---- ---	---- ---	---- ---	7146 AY3	
	(code P4X)	1	---- ---	---- ---	---- ---	7146 AX9	
	(codes L4B, H4B, K4B, L4Q, H4Q, K4Q, L4R, H4R, K4R, L4T, H4T, K4T, H4Y)						
	UP TO Serial No. 57-208314						
	(No. 1)	1	---- ---	---- ---	1027 AW2		
	(No. 2)	1	---- ---	---- ---	1028 AW2		
	(No. 3)	1	---- ---	---- ---	1004 AW2		
	(No. 4)	1	---- ---	---- ---	1005 AW2		
	(No. 5)	1	---- ---	---- ---	1006 AW2		
	(No. 6)	1	---- ---	---- ---	1007 AW2		
	(No. 7)	1	---- ---	---- ---	1008 AW2		
	AFTER Serial No. 57-208314						
	No. 1	1	---- ---	---- ---	1027 AWW		
	No. 2	1	---- ---	---- ---	1028 AWW		
	No. 3	1	---- ---	---- ---	1004 AWW		
	No. 4	1	---- ---	---- ---	1005 AWW		
	No. 5	1	---- ---	---- ---	1006 AWW		
	No. 6	1	---- ---	---- ---	1007 AWW		
	No. 7	1	---- ---	---- ---	1008 AWW		
	D2						
	(codes L1B, K1B, L4B, L5B, L6B)	1	7165 AB3	7167 AB3			
	(codes L1Q, K1Q, L6Q)	1	7165 AQ3	7167 AQ3			
	(codes L1R, K1R, L4R, L5R, L6R)	1	7165 AW2	7167 AW2			
	(codes L1T, K1T, L2T, K2T, L4T, L5T, L8T, K8T, L6T)	1	7165 AT3	7167 AT3			
	(codes L1Y, K1Y)	1	7165 AY3	7167 AY3			
	(code L4X)	1	7165 AX9				
	(code K2A)	1	7165 AA2				
	(codes L3B, H4B)	1	---- ---	7167 AB3			
	(code H4Q)	1	---- ---	7167 AQ3			
	(codes L3R, H4R)	1	---- ---	*7167 AW2			
	(codes L3T, H4T)	1	---- ---	7167 AT3			
	(codes L3X, H4X)	1	---- ---	7167 AX9			

★ Indicates use as required.
⊟ Indicates parts not listed in any previous parts book.
Right and left part numbers are on same line, first number is right, second number is left.
* Indicates change or addition.

MyMopar.com

Printed in U.S.A.
Prices and specifications subject to change without notice.
April 1966, Supersedes May 1965.

CODE	REMARKS	PER CAR	SED.	4D H.T	STA. WGN.	2D H.T	CV. CP.
23-86-3	HEADLINING and LISTINGS - Cont'd						
	D2-L						
	(codes L1B, L4B, H4B, L9B, P1B, P4B)	1	---- ---	---- ---	---- ---	7135 AB3	
	(codes L1Q, H4Q, P1Q, P4Q)	1	---- ---	---- ---	---- ---	7135 AQ3	
	(codes L1R, L4R, L9R, H4R, P4R)	1	---- ---	---- ---	--- ---	7135 AR7	
	(codes L1T, L4T)	1	---- ---	---- ---	---- ---	7135 AT3	
	(codes L1Y, P4Y)	1	---- ---	---- ---	---- ---	7135 AY3	
	(codes L4X, L9X, H4X, P4X)	1	---- ---	---- ---	---- ---	7135 AX9	
	(code P4W)	1	---- ---	---- ---	---- ---	7135 AW2	
	(code P4T)	1	---- ---	---- ---	---- ---	7135 AT7	
	(code P4U)	1	---- ---	---- ---	---- ---	7135 AU7	
	D2 (6 window sedan)						
	(codes H1B, H4B)	1	7165 AB3				
	(code H1Q)	1	7165 AQ3				
	(codes H1R, H4R)	1	7165 AW2				
	(codes H1T, H4T)	1	7165 AT3				
	(code H1Y)	1	7165 AY3				
	(codes L2A, K2A, L8A, K8A)	1	7165 AA2				
	D2-L (panel, rear quarter upper headlining trim)						
	(codes L1B, L9B, K1B, L5B)	1	3504-5 AB3	---- ---	---- ---	2090-1 AB3	
	(codes L1Q, K1Q)	1	3504-5 AQ3	---- ---	---- ---	2090-1 AQ3	
	(codes L1R, L9R, K1R, L4R)	1	3504-5 AW2	---- ---	---- ---	2090-1 AR7	
	(codes L1T, K1T)	1	3504-5 AT3	---- ---	---- ---	2090-1 AT3	
	(codes L1Y, K1Y)	1	3504-5 AY3	---- ---	---- ---	2090-1 AY3	
	(code L9X, L4X)	1	3504-5 AX9	---- ---	---- ---	2090-1 AX9	
	(codes L2A, K2A, L8A, K8A)	1	3504-5 AA2				
	D2 (embossed screen finish) (codes L4B, H4B)						
	(No. 1)	1	---- ---	---- ---	1051 AB3		
	(No. 2)	1	---- ---	---- ---	1052 AB3		
	(No. 3)	1	---- ---	---- ---	1054 AB3		
	(No. 4)	1	---- ---	---- ---	1054 AB3		
	(No. 5)	1	---- ---	---- ---	1055 AB3		
	(No. 6)	1	---- ---	---- ---	1056 AB3		
	(No. 7) (w or w/o dome lamp cutout)	1	---- ---	---- ---	*1057 AB3		
	(codes L4Q, H4Q)						
	(No. 1)	1	---- ---	---- ---	1051 AQ3		
	(No. 2)	1	---- ---	---- ---	1052 AQ3		
	(No. 3)	1	---- ---	---- ---	1054 AQ3		
	(No. 4)	1	---- ---	---- ---	1054 AQ3		
	(No. 5)	1	---- ---	---- ---	1055 AQ3		
	(No. 6)	1	---- ---	---- ---	1056 AQ3		
	(No. 7) (w or w/o dome lamp cutout)	1	---- ---	---- ---	*1057 AQ3		
	(codes L4R, H4R)						
	(No. 1)	1	---- ---	---- ---	1051 AR7		
	(No. 2)	1	---- ---	---- ---	1052 AR7		
	(No. 3)	1	---- ---	---- ---	1054 AR7		
	(No. 4)	1	---- ---	---- ---	1054 AR7		
	(No. 5)	1	---- ---	---- ---	1055 AR7		
	(No. 6)	1	---- ---	---- ---	1056 AR7		
	(No. 7) (w or w/o dome lamp cutout)	1	---- ---	---- ---	*1057 AR7		

★ Indicates use as required.
⊟ Indicates parts not listed in any previous parts book.
April 1966, Supersedes May 1965.

Printed in U.S.A.
Prices and specifications subject to change without notice.
Right and left part numbers are on same line, first number is right, second number is left.
* Indicates change or addition.

MyMopar.com

CODE	REMARKS	PER CAR	SED.	4D H.T	STA. WGN.	2D H.T	CV. CP.
23-86-3	HEADINGS and LISTINGS - Cont'd						
	D2 (hardboard)						
	(codes L4T, H4T)						
	(No. 1)	1	---- ---	---- ---	1051 AT3		
	(No. 2)	1	---- ---	---- ---	1052 AT3		
	(No. 3)	1	---- ---	---- ---	1054 AT3		
	(No. 4)	1	---- ---	---- ---	1054 AT3		
	(No. 5)	1	---- ---	---- ---	1055 AT3		
	(No. 6)	1	---- ---	---- ---	1056 AT3		
	(No. 7) (w or w/o dome lamp cutout)	1	---- ---	---- ---	*1057 AT3		
	D2						
	(codes L4Y, H4Y)						
	(No. 1)	1	---- ---	---- ---	1051 AY3		
	(No. 2)	1	---- ---	---- ---	1052 AY3		
	(No. 3)	1	---- ---	---- ---	1054 AY3		
	(No. 4)	1	---- ---	---- ---	1054 AY3		
	(No. 5)	1	---- ---	---- ---	1055 AY3		
	(No. 6)	1	---- ---	---- ---	1056 AY3		
	(No. 7) (w or w/o dome lamp cutout)	1	---- ---	---- ---	*1057 AY3		
	D2 (hardboard)(w/air conditioning)						
	(codes L4B, L4Q, L4R, L4Y)						
	(No. 1)	1	---- ---	---- ---	1051 AW2		
	(No. 2)	1	---- ---	---- ---	1052 AW2		
	(No. 3)	1	---- ---	---- ---	1054 AW2		
	(No. 4)	1	---- ---	---- ---	1054 AW2		
	(No. 5)	1	---- ---	---- ---	1055 AW2		
	(No. 6)	1	---- ---	---- ---	1056 AW2		
	(No. 7) (w or w/o dome lamp cutout)	1	---- ---	---- ---	1057 AW2		
	(smooth finish)						
	(codes L4B, H4B)						
	(No. 1)	1	---- ---	---- ---	*1051 ABB		
	(No. 2)	1	---- ---	---- ---	*1052 ABB		
	(No. 3)	1	---- ---	---- ---	*1054 ABB		
	(No. 4)	1	---- ---	---- ---	*1054 ABB		
	(No. 5)	1	---- ---	---- ---	*1055 ABB		
	(No. 6)	1	---- ---	---- ---	*1056 ABB		
	(No. 7) (w or w/o dome light cutout)	1	---- ---	---- ---	*1057 ABB		
	(codes L4Q, H4Q)						
	(No. 1)	1	---- ---	---- ---	*1051 AQQ		
	(No. 2)	1	---- ---	---- ---	*1052 AQQ		
	(No. 3)	1	---- ---	---- ---	*1054 AQQ		
	(No. 4)	1	---- ---	---- ---	*1054 AQQ		
	(No. 5)	1	---- ---	---- ---	*1055 AQQ		
	(No. 6)	1	---- ---	---- ---	*1056 AQQ		
	(No. 7) (w or w/o dome light cutout)	1	---- ---	---- ---	*1057 AQQ		
	(codes L4R, H4R)						
	(No. 1)	1	---- ---	---- ---	*1051 ARR		
	(No. 2)	1	---- ---	---- ---	*1052 ARR		
	(No. 3)	1	---- ---	---- ---	*1054 ARR		
	(No. 4)	1	---- ---	---- ---	*1054 ARR		
	(No. 5)	1	---- ---	---- ---	*1055 ARR		
	(No. 6)	1	---- ---	---- ---	*1056 ARR		
	(No. 7)(w or w/o dome light cutout)	1	---- ---	---- ---	*1057 ARR		

★ Indicates use as required.
⊟ Indicates parts not listed in any previous parts book.
Right and left part numbers are on same line, first number is right, second number is left.
* Indicates change or addition.

MyMopar.com

Printed in U.S.A.
Prices and specifications subject to change without notice.
April 1966, Supersedes May 1965.

CODE	REMARKS	PER CAR	SED.	4D H.T.	STA. WGN.	2D H.T.	CV. CP.
23-86-3	HEADLININGS and LISTINGS - Cont'd						
	(codes L4T, H4T)						
	(No. 1)	1	---- ---	---- ---	*1051 ATT		
	(No. 2)	1	---- ---	---- ---	*1052 ATT		
	(No. 3)	1	---- ---	---- ---	*1054 ATT		
	(No. 4)	1	---- ---	---- ---	*1054 ATT		
	(No. 5)	1	---- ---	---- ---	*1055 ATT		
	(No. 6)	1	---- ---	---- ---	*1056 ATT		
	(No. 7)(w or w/o dome light cutout)	1	---- ---	---- ---	*1057 ATT		
	(codes L4Y, H4Y)						
	(No. 1)	1	---- ---	---- ---	*1051 AYY		
	(No. 2)	1	---- ---	---- ---	*1052 AYY		
	(No. 3)	1	---- ---	---- ---	*1054 AYY		
	(No. 4)	1	---- ---	---- ---	*1054 AYY		
	(No. 5)	1	---- ---	---- ---	*1055 AYY		
	(No. 6)	1	---- ---	---- ---	*1056 AYY		
	(No. 7)(w or w/o dome light cutout)	1	---- ---	---- ---	*1057 AYY		
	(w/air cond.) (codes L4B, L4Q, L4R, L4Y)						
	(No. 1)	1	---- ---	---- ---	*1051 AWW		
	(No. 2)	1	---- ---	---- ---	*1052 AWW		
	(No. 3)	1	---- ---	---- ---	*1054 AWW		
	(No. 4)	1	---- ---	---- ---	*1054 AWW		
	(No. 5)	1	---- ---	---- ---	*1055 AWW		
	(No. 6)	1	---- ---	---- ---	*1056 AWW		
	(No. 7)(w or w/o dome light cutout)	1	---- ---	---- ---	*1057 AWW		
	D2 (foam headlining) (codes H4B, P1B)						
	(No. 1)	1	---- ---	1010 AB4	---- ---	1068 AB4	
	(No. 2)	1	---- ---	1012 AB4	---- ---	1069 AB4	
	(No. 3)	1	---- ---	1012 AB4	---- ---	1070 AB4	
	(No. 4)	1	---- ---	1013 AB4	---- ---	1071 AB4	
	(No. 5)	1	---- ---	1014 AB4	---- ---	1072 AB4	
	(codes H4Q, P1Q)						
	(No. 1)	1	---- ---	1010 AQ4	---- ---	1068 AQ4	
	(No. 2)	1	---- ---	1012 AQ4	---- ---	1069 AQ4	
	(No. 3)	1	---- ---	1012 AQ4	---- ---	1070 AQ4	
	(No. 4)	1	---- ---	1013 AQ4	---- ---	1071 AQ4	
	(No. 5)	1	---- ---	1014 AQ4	---- ---	1072 AQ4	
	(codes H4R, P4R)						
	(No. 1)	1	---- ---	1010 AW2	---- ---	1068 AR5	
	(No. 2)	1	---- ---	1012 AW2	---- ---	1069 AR5	
	(No. 3)	1	---- ---	1012 AW2	---- ---	1070 AR5	
	(No. 4)	1	---- ---	1013 AW2	---- ---	1071 AR5	
	(No. 5)	1	---- ---	1014 AW2	---- ---	1072 AR5	
	(code H4T)						
	(No. 1)	1	---- ---	1010 AT6	---- ---	1068 AT6	
	(No. 2)	1	---- ---	1012 AT6	---- ---	1069 AT6	
	(No. 3)	1	---- ---	1012 AT6	---- ---	1070 AT6	
	(No. 4)	1	---- ---	1013 AT6	---- ---	1071 AT6	
	(No. 5)	1	---- ---	1014 AT6	---- ---	1072 AT6	
	(code P4T)						
	(No. 1)	1	---- ---	---- ---	---- ---	1068 AT5	
	(No. 2)	1	---- ---	---- ---	---- ---	1069 AT5	
	(No. 3)	1	---- ---	---- ---	---- ---	1070 AT5	
	(No. 4)	1	---- ---	---- ---	---- ---	1071 AT5	
	(No. 5)	1	---- ---	---- ---	---- ---	1071 AT5	

★ Indicates use as required.
⊟ Indicates parts not listed in any previous parts book.

Printed in U.S.A.
Prices and specifications subject to change without notice.
Right and left part numbers are on same line, first number is right, second number is left.
• Indicates change or addition.

MyMopar.com

CODE	REMARKS	PER CAR	SED.	4D H.T.	STA. WGN.	2D H.T.	CV. CP.

NOTES

★ Indicates use as required.
B Indicates parts not listed in any previous parts book.

Printed in U.S.A.
Prices and specifications subject to change without notice.
April 1966.

MyMopar.com

CODE	REMARKS	PER CAR	SED.	4D H.T	STA. WGN.	2D H.T	CV. CP.
23-86-3	HEADLINING and LISTINGS - Cont'd						
	D2 (foam headlining)						
	(codes H4X, P4X, P4U)						
	(No. 1)	1	---- ---	*1010 AA2	---- ---	*1068 AA2	
	(No. 2)	1	---- ---	1012 AA2	---- ---	1069 AA2	
	(No. 3)	1	---- ---	1012 AA2	---- ---	1070 AA2	
	(No. 4)	1	---- ---	1013 AA2	---- ---	1071 AA2	
	(No. 5)	1	---- ---	1014 AA2	---- ---	1072 AA2	
	D2-L, D2-H (vinyl finish)						
	(qtr. upper headlining trim panel)						
	(codes L1B, L3B, H4B)	1	---- ---	*2052-3 AB3			
	(codes L1Q, L4Q)	1	---- ---	*2052-3 AQ3			
	(codes L1R, L3R, H4R)	1	---- ---	⊟2052-3 AW2			
	(codes L3X, H4X)	1	---- ---	⊟2052-3 AX9			
	(code L1Y)	1	---- ---	⊟2052-3 AY3			
	(codes L1T, L3T, H4T)	1	---- ---	*2052-3 AT3			
	(perforated)						
	(codes H1B, H4B)	1	⊟3542-3 AB3				
	(code H4Q)	1	⊟3542-3 AQ3				
	(codes H1R, H4R)	1	⊟3542-3 AW2				
	(codes H1T, H4T)	1	⊟3542-3 AT3				
	(code H1Y)	1	⊟3542-3 AY3				
	D2 (vinyl finish)						
	(codes L4B, H4B, P1B)	1	---- ---	---- ---	---- ---	*2090-2 AB3	
	(codes H4Q, P1Q)	1	---- ---	---- ---	---- ---	*2090-1 AQ3	
	(codes L4R, H4R, P4R)	1	---- ---	---- ---	---- ---	*2090-1 AR7	
	(codes L4T, H4T)	1	---- ---	---- ---	---- ---	*2090-1 AT3	
	(code P4T)	1	---- ---	---- ---	---- ---	*2090-1 AT7	
	(code P4W)	1	---- ---	---- ---	---- ---	*2090-1 AW2	
	(code P4U)	1	---- ---	---- ---	---- ---	⊟2090-1 AU7	
	(codes H4X, P4X)	1	---- ---	---- ---	---- ---	*2090-1 AX9	
	D2-H (rear quarter upper headlining)(suede finish)						
	(code H4B)	1	---- ---	*3500-1 AB4	---- ---	*2094-5 AB4	
	(code H4Q)	1	---- ---	3500-1 AQ4	---- ---	2094-5 AQ4	
	(code H4R)	1	---- ---	3500-1 AW2	---- ---	⊟2094-5 AR5	
	(code H4T)	1	---- ---	*3500-1 AT6	---- ---	2094-5 AT6	
	(code H4X)	1	---- ---	3500-1 AA2	---- ---	⊟2094-5 AA2	
	D2-P (rear quarter upper headlining)(suede finish)						
	(code P1B)	1	---- ---	---- ---	---- ---	*2096-7 AB4	
	(code P1Q)	1	---- ---	---- ---	---- ---	2096-7 AQ4	
	(code P4T)	1	---- ---	---- ---	---- ---	*2096-7 AT5	
	(code P4R)	1	---- ---	---- ---	---- ---	⊟2096-7 AR5	
	(codes P4U, P4X)	1	---- ---	---- ---	---- ---	⊟2096-7 AA2	
23-86-8	RETAINER, Roof Outside Cover						
	W1, W2 Side	1	---- ---	---- ---	---- ---	⊟2573 042-3	
	Rear	1	---- ---	---- ---	---- ---	⊟2573 040-1	
	Side Front	2	---- ---	---- ---	---- ---	⊟2573 692	
	Screw (attaching)	14	---- ---	---- ---	---- ---	*6024 271	
	D2-P Front	1	---- ---	---- ---	---- ---	⊟2603 276-7	
23-86-10	BOW, Roof Support						
	W1, W2						
	(No. 1)	1	*2424 804	---- ---	*2424 804	*2424 500	
	(Nos. 2 and 3) (2 D.)	2	*2528 882				
	(Nos. 2 and 3) (4 D.)	2	*2424 805				
	(No. 2)	1	---- ---	---- ---	*2480 973		
	(Nos. 3 and 4)	2	---- ---	---- ---	*2480 974		

★ Indicates use as required.
⊟ Indicates parts not listed in any previous parts book.

MyMopar.com

Printed in U.S.A.
Prices and specifications subject to change without notice.
Right and left part numbers are on same line, first number is right, second number is left.
• Indicates change or addition.

CODE	REMARKS	PER CAR	SED.	4D H.T	STA. WGN.	2D H.T.	CV. CP.
23-86-10	BOW, Roof Support - Cont'd						
	D2						
	(w/dome lamp support brkt.)	1	2482 276	---- ---	---- ---	2482 273	
		2	---- ---	2482 270			
	(Nos. 1 and 2)	2	---- ---	---- ---	2483 992		
	(No. 3)	1	---- ---	---- ---	2482 279		
	(No. 4)	1	---- ---	---- ---	2483 862		
23-86-11	RETAINER, Roof Side Rail Roof Bow						
	D2	4	2482 581	2482 581			
		8	---- ---	---- ---	2482 581		
		2	---- ---	---- ---	---- ---	2482 581	
	(rear bow moulding)	1	---- ---	---- ---	---- ---	---- ---	2581 893
	Screw (attaching)	2	---- ---	---- ---	---- ---	---- ---	6025 692
23-86-14	PAD, Air Conditioning Roof Evap. Unit Trim						
	D2	1	---- ---	---- ---	*2485 395		
23-86-16	SUPPORT, Roof Inside Finish Panel Moulding						
	D2	6	---- ---	2581 302			
		4	---- ---	---- ---	---- ---	2581 302	
	(use w/No. 3 retainer)	2	---- ---	---- ---	---- ---	2581 574	
23-86-19	STRIP, Headlining Retaining						
	W1, W2	1	---- ---	---- ---	---- ---	2483 408-9	
	Front	1	2483 406-7				
	Rear	1	2255 430-1				
	Side	1	2481 750-1				
	Upper	1	2481 752				
	Front Side	1	---- ---	---- ---	2483 632-3		
	Rear	1	---- ---	---- ---	2251 448		
	Side Rear	1	---- ---	---- ---	2251 446-7		
	Rear Corner	1	---- ---	---- ---	2251 444-5		
	Screw (retaining)(front strip)	2	---- ---	---- ---	* 125 978		
	Fastener	10	---- ---	---- ---	6000 922	6000 922	
	D2 Front	1	2482 372-3				
	Rear	1	2484 544-5	---- ---	*2602 136-7		
	(rear window) Upper	1	---- ---	---- ---	2527 803		
	Front Side	1	---- ---	---- ---	2482 374-5		
	(6 window sedan)						
	Front	1	2482 372-3				
	Rear	1	2482 378-9				
	Side	1	2603 942-3				
	(headlining retainer)						
	(short)(red)	★	2581 273	2581 273	---- ---	2581 273	
	(medium)(aluminum)	★	2581 274	2581 274	---- ---	2581 274	
	(long)(yellow)	★	2581 275	2581 275	---- ---	2581 275	
	Rear Corner	1	---- ---	---- ---	2482 382-3		
	Rear	1	---- ---	---- ---	2482 309		
	(w/o air cond.) Side Rear	1	---- ---	---- ---	*2602 136-7		
	(w/air cond.) Side Rear	1	---- ---	---- ---	2602 136-7		
	(rear window) (strip)						
	Upper	1	2526 956	2484 046	---- ---	2527 803	
	Side	1	2526 954-5	2484 048-9	---- ---	2527 822-3	
	Fastener	8	6000 922	6000 922	---- ---	6000 922	
	Screw	8	6023 248	6023 248	---- ---	6023 248	
	Rear Quarter	1	---- ---	2581 694-5			
	Fastener	8	6000 365	6000 365	---- ---	6000 365	

★ Indicates use as required.
⊟ Indicates parts not listed in any previous parts book.
Right and left part numbers are on same line, first number is right, second number is left.
* Indicates change or addition.

MyMopar.com

Printed in U.S.A.
Prices and specifications subject to change without notice.
April 1966, Supersedes May 1965.

CODE	REMARKS	PER CAR	SED.	4D H.T	STA. WGN.	2D H.T	CV. CP.
23-86-19	STRIP, Headlining Retaining Cont'd						
	D2-L						
	(headlining and garnish moulding retainer)						
	Front	1	---- ---	2484 072-3	---- ---	2527 804-5	
	Rear	1	---- ---	2484 074-5	---- ---	2527 806-7	
	D2-H, D2-P Front	1	---- ---	2527 826-7	---- ---	2528 354-5	
	Rear	1	---- ---	2527 828-9	---- ---	2573 832-3	
23-86-24	RETAINER, Roof Inside Finish Moulding						
	W1, W2						
	(Nos. 1, 4 and 5)	3	---- ---	---- ---	2499 084		
	(Nos. 2 and 3)	2	---- ---	---- ---	2499 083		
	(No. 6)	1	---- ---	---- ---	2499 086		
	D2-H, D2-P	3	---- ---	2581 461	---- ---	2581 461	
	(Nos. 1 thru 6)	6	---- ---	---- ---	2581 461		
	(No. 4)	1	---- ---	---- ---	---- ---	2499 505	
23-86-35	MOULDING, Roof Inside Finish Panel						
	W1, W2						
	(No. 1 thru 6) (white)	★	---- ---	---- ---	1047 VW2		
	D2						
	(No. 1 thru 6) (white)	★	---- ---	---- ---	1047 VW2		
	(No. 1 thru 6) (bright)	★	---- ---	---- ---	2440 144		
	D2-H						
	(No. 1 thru 3)						
	(code H4B)	★	---- ---	1079 AB4			
	(code H4Q)	★	---- ---	1082 AQ4			
	(code H4R)	★	---- ---	1079 AW2			
	(code H4T)	★	---- ---	1079 AT6			
	(code H4X)	★	---- ---	1079 AA2			
	D2-H, D2-P						
	(codes H4B, P1B)	4	---- ---	---- ---	---- ---	1079 AB4	
	(codes H4Q, P1Q)	4	---- ---	---- ---	---- ---	1082 AQ4	
	(codes H4X, P4X, P4U)	4	---- ---	---- ---	---- ---	*1079 AA2	
	(code H4T)	4	---- ---	---- ---	---- ---	1079 AT6	
	(codes P4R, H4R)	4	---- ---	---- ---	---- ---	*1082 AR5	
	(code P4T)	4	---- ---	---- ---	---- ---	1082 AT5	
	(code P4W)	4	---- ---	---- ---	---- ---	1079 AW2	
	MOULDING, Rear Window Headlining Trim						
	W1, W2						
	(codes L1B, K1B, L5B, H1B, H4B)	2	3700 AB3				
	(codes H1Q, H4Q)	2	3700 AQ3				
	(codes L1T, K1T, L2T, K2T, L8T, K8T, T8T, L5T, H1T, H4T)	2	3700 AT3				
	(codes L1R, K1R, L5R, H1R, H4R)	2	3700 AW2				
	(codes H1Y, H4Y)	2	3700 AY3				
	D2						
	(folding top rear bow)	1	---- ---	---- ---	---- ---	---- ---	2581 892
	Screw (attaching)	2	---- ---	---- ---	---- ---	---- ---	6025 692

★ Indicates use as required.
⊟ Indicates parts not listed in any previous parts book.
April 1966, Supersedes May 1965.

Printed in U.S.A.
Prices and specifications subject to change without notice.
Right and left part numbers are on same line, first number is right, second number is left.
* Indicates change or addition.

MyMopar.com

CODE	REMARKS	PER CAR	SED.	4D H.T	STA. WGN.	2D H.T	CV. CP.
23-86-36	CAP, Roof Inside Finish Moulding						
	W1, W2						
	(codes L1B, K1B, L5B, H1B, H5B)	1	3711 AB3				
	(codes L1Q, K1Q, H1Q)	1	3711 AQ3				
	(codes L1R, K1R, L5R, H1R, H5R)	1	3711 AW2				
	(codes L1T, K1T, L2T, K2T, L8T, K8T, T8T, L5T, H1T, H5T)	1	3711 AT3				
	W1, W2	12	---- ---	---- ---	*1030 VW2		
	D2	12	---- ---	---- ---	1759 636		
23-91-6	PANEL, Cowl Trim						
	W1, W2						
	(codes L1B, K1B, L5B, L4B, K4B, H1B, H4B)	1	⊟1410-1 AB8	---- ---	1410-1 AB8	1410-1 AB8	1410-1 AB8
	(codes L1Q, K1Q, L4Q, K4Q, H1Q, H4Q)	1	⊟1410-1 AQ8	---- ---	1410-1 AQ8	1410-1 AQ8	1410-1 AQ8
	(codes L1R, K1R, L5R, L4R, K4R, H1R, H5R, H4R)	1	⊟1410-1 AR5	---- ---	1410-1 AR5	1410-1 AR5	1410-1 AR5
	(codes L1T, K1T, L2T, K2T, L8T, K8T, T8T, L5T, L4T, K4T, H1T, H5T, H4T)	1	1410-1 VT6	---- ---	1410-1 VT6	1410-1 VT6	1410-1 VT6
	(code P4B)	1	---- ---	---- ---	---- ---	1410-1 AB8	1410-1 AB8
	(code P4Q)	1	---- ---	---- ---	---- ---	1410-1 AQ8	1410-1 AQ8
	(code P4R)	1	---- ---	---- ---	---- ---	1410-1 AR7	1410-1 AR7
	(code P4T)	1	---- ---	---- ---	---- ---	1410-1 AT8	1410-1 AT8
	(code P4Y)	1	---- ---	---- ---	---- ---	1410-1 AY3	1410-1 AY3
	(code P4X)	1	---- ---	---- ---	---- ---	1410 VX9	1410 VX9
	Screw, w/Seal (attaching)	1	6023 388	---- ---	6023 388	6023 388	6023 388
	Screw (attaching)	★	6025 064	---- ---	6025 064	6025 064	6025 064
	D2						
	(codes L1B, L3B, K1B, L4B, L5B, L9B, H1B, H4B, L6B)	1	1422-3 AB8	1422-3 AB8	1422-3 AB8	1422-3 AB8	1422-3 AB8
	(codes L1Q, K1Q, L4Q, H1Q, H4Q, L6Q)	1	1422-3 AQ8	1422-3 AQ8	1422-3 AQ8	1422-3 AQ8	1422-3 AQ8
	(codes L1R, L3R, K1R, L4R, L5R, L9R, H1R, H4R, L6R)	1	1422-3 AR8	1422-3 AR8	1422-3 AR8	1422-3 AR8	1422-3 AR8
	(codes L1T, L3T, K1T, L2T, K2T, L8T, K8T, L4T, L5T, H1T, H4T, L6T)	1	1422-3 AT8	1422-3 AT8	1422-3 AT8	1422-3 AT8	1422-3 AT8
	(codes L3X, H4X, L9X)	1	---- ---	---- ---	---- ---	1422-3 AX9	1422-3 AX9
	(codes L1Y, K1Y, L4Y, H1Y, H4Y)	1	1422-3 AY8	1422-3 AY8	1422-3 AY8	1422-3 AY8	1422-3 AY8
	(code K2A)	1	1422-3 AX9				
	D2-P (carpeted)						
	(code P1B)	1	---- ---	---- ---	---- ---	1430-1 AB8	
	(code P1Q)	1	---- ---	---- ---	---- ---	1430-1 AQ8	
	(code P4R)	1	---- ---	---- ---	---- ---	1430-1 AR7	
	(code P4T)	1	---- ---	---- ---	---- ---	1430-1 AT9	
	(code P4U)	1	---- ---	---- ---	---- ---	1430-1 AU8	
	(code P4X)	1	---- ---	---- ---	---- ---	*1432-3 AX8	
	EXTENSION, Cowl Side Trim Panel (paint as required)						
	D2	1	1428-9 AX9	1428-9 AX9	1428-9 AX9	1428-9 AX9	1428-9 AX9
	Screw (attaching)	4	9415 214	9415 214	9415 214	9415 214	9415 214
23-91-20	RETAINER, Cowl Side Trim Panel Carpet						
	D2-P	1	2588 124-5	2588 124-5	2588 124-5	2588 124-5	2588 124-5
	(clip)(upper)	2	2664 466	2664 466	2664 466	2664 466	2664 466

★ Indicates use as required.
⊟ Indicates parts not listed in any previous parts book.
Right and left part numbers are on same line, first number is right, second number is left.
* Indicates change or addition.

MyMopar.com

Printed in U.S.A.
Prices and specifications subject to change without notice.
April 1966, Supersedes May 1965.

CODE	REMARKS	PER CAR	SED.	4D H.T	STA. WGN.	2D H.T	CV. CP.
23-92-5	PANEL, Door Trim						
	W1-L, W2-L (2 D.)						
	(codes L1B, K1B)	1	3132-3 ABB				
	(codes L1Q, K1Q)	1	3132-3 AQQ				
	(codes L1R, K1R)	1	⊟3132-3 AOR				
	(codes L1T, K1T, L2T, K2T, L8T, K8T)	1	3132-3 ATT				
	W1-L, W2-L (4 D.)						
	(codes L1B, L4B, K1B, K4B, L5B) Front	1	3130-1 ABB	---- ---	3130-1 ABB		
	Rear	1	3224-5 ABB	---- ---	3224-5 ABB		
	(codes L1Q, L4Q, K1Q, K4Q)						
	Front	1	3130-1 AQQ	---- ---	3130-1 AQQ		
	Rear	1	3224-5 AQQ	---- ---	3224-5 AQQ		
	(codes L1R, L4R, K1R, K4R, L5R) Front	1	3130-1 AOR	---- ---	3130-1 AOR		
	Rear	1	3224-5 AOR	---- ---	3224-5 AOR		
	(codes L1T, L4T, K1T, K4T, L5T, L2T, K2T, L8T, K8T, T8T) Front	1	3130-1 ATT				
	Rear	1	3224-5 ATT				
	W1-H, W2-H						
	(codes H1B, H4B, H5B)						
	Front	1	3140-1 ABB	---- ---	3140-1 ABB	3144-5 ABB	3144-5 ABB
	Rear	1	3228-9 ABB	---- ---	3228-9 ABB		
	(codes H1Q, H4Q) Front	1	3140-1 AQQ	---- ---	3228-9 AQQ	3144-5 AQQ	3144-5 AQQ
	Rear	1	3228-9 AQQ	---- ---	3228-9 AQQ		
	(codes H1R, H4R, H5R)						
	Front	1	3140-1 ARR	---- ---	3228-9 ARR	3144-5 ARR	3144-5 ARR
	Rear	1	3228-9 ARR	---- ---	3228-9 ARR		
	(codes H1T, H4T, H5T)						
	Front	1	3140-1 ATT	---- ---	3228-9 ATT	3144-5 ATT	3144-5 ATT
	Rear	1	3228-9 ATT	---- ---	3228-9 ATT		
	Screw and Washer (rear door attaching)	4	*6023 381	---- ---	*6023 381		
	W2-P (w/o mylar strips)						
	(code P4B)	1	---- ---	---- ---	---- ---	*3146-7 ABB	*3146-7 ABB
	(code P4Q)	1	---- ---	---- ---	---- ---	3146-7 AQQ	3146-7 AQQ
	(code P4R)	1	---- ---	---- ---	---- ---	3146-7 ARR	3146-7 ARR
	(code P4T)	1	---- ---	---- ---	---- ---	3146-7 ATT	3146-7 ATT
	(code P4Y)	1	---- ---	---- ---	---- ---	3146-7 AYW	3146-7 AYW
	(code P4X)	1	---- ---	---- ---	---- ---	3146-7 AXX	3146-7 AXX
	(w/mylar strips)						
	(code P4B)	1	---- ---	---- ---	---- ---	⊟3142-3 ABB	⊟3142-3 ABB
	(code P4Q)	1	---- ---	---- ---	---- ---	⊟3142-3 AQQ	⊟3142-3 AQQ
	(code P4R)	1	---- ---	---- ---	---- ---	⊟3142-3 ARR	⊟3142-3 ARR
	(code P4T)	1	---- ---	---- ---	---- ---	⊟3142-3 ATT	⊟3142-3 ATT
	(code P4Y)	1	---- ---	---- ---	---- ---	⊟3142-3 AYW	⊟3142-3 AYW
	(code P4X)	1	---- ---	---- ---	---- ---	⊟3142-3 AXX	⊟3142-3 AXX
	(codes L1B, L3B) Front	1	---- ---	*3458-9 ABB			
	Rear	1	---- ---	*3288-9 ABB			
	(codes L1R, L3R) Front	1	---- ---	*3458-9 ARR			
	Rear	1	---- ---	*3288-9 ARR			
	(codes L1T, L3T) Front	1	---- ---	*3458-9 ATT			
	Rear	1	---- ---	*3288-9 ATT			
	(code L3X) Front	1	---- ---	⊟3458-9 AXX			
	Rear	1	---- ---	⊟3288-9 AXX			

★ Indicates use as required.
⊟ Indicates parts not listed in any previous parts book.

May 1965, Supersedes Sept. 4, 1964.

MyMopar.com

Printed in U.S.A.
Prices and specifications subject to change without notice.
Right and left part numbers are on same line, first number is right, second number is left.
* Indicates change or addition.

CODE	REMARKS		PER CAR	SED.	4D H.T	STA. WGN.	2D H.T	CV. CP.
23-92-5	PANEL, Door Trim - Cont'd							
	D2-L							
	(codes L1B, L4B, K1B, L6B, L9B)							
		Front	1	*3438-9 ABB	*3458-9 ABB	*3438-9 ABB	*3460-1 ABB	*3460-1 ABB
		Rear	1	3282-3 ABB	3288-9 ABB	3282-3 ABB		
	(codes L1Q, L4Q, L6Q, K1Q)							
		Front	1	*3438-9 AQQ	*3458-9 AQQ	*3438-9 AQQ	*3460-1 AQQ	*3460-1 AQQ
		Rear	1	3282-3 AQQ	3288-9 AQQ	3282-3 AQQ		
	(codes L1R, L4R, L6R, K1R, L9R)							
		Front	1	*3438-9 ARR	*3458-9 ARR	*3438-9 ARR	*3460-1 ARR	*3460-1 ARR
		Rear	1	3282-3 ARR	3288-9 ARR	3282-3 ARR		
	(codes L1T, L4T, K1T, L6T)							
		Front	1	*3438-9 ATT	*3458-9 ATT	*3438-9 ATT	*3460-1 ATT	*3460-1 ATT
		Rear	1	3282-3 ATT	3288-9 ATT	3282-3 ATT		
	(codes L1Y, L4Y, K1Y)							
		Front	1	3438-9 AYY	3458-9 AYY	3438-9 AYY	3460-1 AYY	3460-1 AYY
		Rear	1	3282-3 AYY	3288-9 AYY	3282-3 AYY		
	(code L4X)	Front	1	3438-9 AXX	---- ---	---- ---	3460-1 AXX	3460-1 AXX
		Rear	1	3282-3 AXX				
	(code K2A)	Front	1	3438-9 AAA				
		Rear	1	3282-3 AAA				
	(code L9X)	Front	1	---- ---	---- ---	---- ---	3460-1 AXX	3460-1 AXX
	(code L5B)	Front	1	3446-7 ABB				
		Rear	1	3284-5 ABB				
	(code L5R)	Front	1	3446-7 ARR				
		Rear	1	3284-5 ARR				
	(code L5T)	Front	1	3446-7 ATT				
		Rear	1	3284-5 ATT				
	(codes L2A, K2A, L8A, K8A)							
		Front	1	3438-9 AAA				
		Rear	1	3282-3 AAA				
	D2-H							
	(code H1B)	Front	1	3446-7 ABB				
		Rear	1	3284-5 ABB				
	(code H1Q)	Front	1	3446-7 AQQ				
		Rear	1	3284-5 AQQ				
	(code H1R)	Front	1	3446-7 ARR				
		Rear	1	3284-5 ARR				
	(code H1T)	Front	1	3446-7 ATT				
		Rear	1	3284-5 ATT				
	(code H1Y)	Front	1	3446-7 AYY				
		Rear	1	3284-5 AYY				
	(code H4B)	Front	1	3118-9 ABB	3448-9 ABB	3118-9 ABB	3454-5 ABB	3454-5 ABB
		Rear	1	3218-9 ABB	3286-7 ABB	3218-9 ABB		
	(code H4Q)	Front	1	---- ---	3448-9 AQQ	3118-9 AQQ	3454-5 AQQ	3454-5 AQQ
		Rear	1	---- ---	3286-7 AQQ	3218-9 AQQ		
	(code H4R)	Front	1	3118-9 ARR	3448-9 ARR	3118-9 ARR	3454-5 ARR	3454-5 ARR
		Rear	1	3218-9 ARR	3286-7 ARR	3218-9 ARR		
	(code H4T)	Front	1	3118-9 ATT	3448-9 ATT	3118-9 ATT	3454-5 ATT	⊟3454-5 ATT
		Rear	1	3218-9 ATT	3286-7 ATT	3218-9 ATT		
	(code H4Y)	Front	1	---- ---	---- ---	3118-9 AYY		
		Rear	1	---- ---	---- ---	3218-9 AYY		
	(code H4X)	Front	1	---- ---	3448-9 AOX	---- ---	3454-5 AOX	3454-5 AOX
		Rear	1	---- ---	3286-7 AOX			
	D2-P							
	(code P1B)		1	---- ---	---- ---	---- ---	3444-5 ABB	
	(code P1Q)		1	---- ---	---- ---	---- ---	3444-5 AQQ	
	(code P4R)		1	---- ---	---- ---	---- ---	3456-7 ARR	
	(code P4T)		1	---- ---	---- ---	---- ---	3456-7 ATT	

★ Indicates use as required.
⊟ Indicates parts not listed in any previous parts book.
Right and left part numbers are on same line, first number is right, second number is left.
* Indicates change or addition.

MyMopar.com

CODE	REMARKS	PER CAR	SED.	4D H.T	STA. WGN.	2D H.T	CV. CP.
23-92-5	PANEL, Door Trim - Cont'd						
	D2-P						
	(code P4U)	1	---- ---	---- ---	---- ---	3456-7 AOU	
	(code P4X)	1	---- ---	---- ---	---- ---	3456-7 AOX	
	(code P4W)	1	---- ---	---- ---	---- ---	3456-7 AXW	
	Fastener (attaching)	★	6000 121	6000 121	6000 121	6000 121	6000 121
23-96-3	PANEL, Luggage Compartment Front Lining						
	W1, W2	1	*2499 117	---- ---	---- ---	*2499 117	*2499 117
	Fastener (attaching)	3	---- ---	---- ---	---- ---	---- ---	6000 903
	D2	1	2581 915	2581 915	---- ---	2581 915	2581 915
	Fastener	2	---- ---	---- ---	---- ---	6001 425	
	Fastener	★	6000 365	6000 365	---- ---	6000 365	6000 365
	FILLER (luggage compt. floor to quarter)						
	W1, W2	1	2581 972-3	---- ---	---- ---	2581 972-3	2581 972-3
23-96-8	COVER, Wheelhouse and Lower Quarter Trim (paint as required)						
	W1, W2 (2 seat)	1	---- ---	---- ---	2056-7 VT6		
	(3 seat)	1	---- ---	---- ---	2058-9 VT6		
	EXTENSION, Wheelhouse and Lower Quarter Trim Cover						
	W2-H						
	(code H4B)	1	---- ---	---- ---	2042-3 AB4		
	(code H4Q)	1	---- ---	---- ---	2042-3 AQ4		
	(code H4R)	1	---- ---	---- ---	2042-3 AR5		
	(code H4T)	1	---- ---	---- ---	2042-3 VT6		
	D2						
	(codes L4B, H4B)	1	---- ---	---- ---	2026-7 AB4		
	(codes L4Q, H4Q)	1	---- ---	---- ---	2026-7 AQ4		
	(codes L4R, H4R)	1	---- ---	---- ---	2026-7 AR7		
	(codes L4T, H4T)	1	---- ---	---- ---	2026-7 AT6		
	(codes L4Y, H4Y)	1	---- ---	---- ---	2026-7 AY3		
	D2 (left only)						
	(w/air conditioning)						
	(codes L4B, H4B)	1	---- ---	---- ---	3531 AB4		
	(codes L4Q, H4Q)	1	---- ---	---- ---	3531 AQ4		
	(codes L4R, H4R)	1	---- ---	---- ---	3531 AR7		
	(codes L4T, H4T)	1	---- ---	---- ---	3531 AT6		
	(codes L4Y, H4Y)	1	---- ---	---- ---	3531 AY3		
	Screw	14	---- ---	---- ---	*6026 221		
23-99-9	RETAINER, Body Rear Lock Pillar						
	W1, W2	1	---- ---	---- ---	2162 508-9		
23-99-17	RETAINER, Tailgate Opening Pillar Cover Upper						
	D2	2	---- ---	---- ---	2656 924		
23-99-41	COVER, Tailgate Opening Pillar						
	D2 (paint as required)						
	Upper	1	---- ---	---- ---	2810-1 AT6		
	Lower Right	1	---- ---	---- ---	2812 AT6		
23-101-3	PANEL, Quarter Trim						
	W1, W2 (2 D.)						
	(codes L1B, K1B)	1	3314-5 ABB				
	(codes L1Q, K1Q)	1	3314-5 AQQ				
	(codes L1R, K1R)	1	3314-5 AOR				
	(codes L1T, K1T, L2T, K2T, L8T, K8T)	1	3314-5 ATT				

★ Indicates use as required.
⊟ Indicates parts not listed in any previous parts book.
May 1965, Supersedes Sept. 4, 1964.

Printed in U.S.A.
Prices and specifications subject to change without notice.
Right and left part numbers are on same line, first number is right, second number is left.
* Indicates change or addition.

MyMopar.com

CODE	REMARKS	PER CAR	SED.	4D H.T	STA. WGN.	2D H.T	CV. CP.
23-101-3	PANEL, Quarter Trim - Cont'd						
	W1-L, W2-L, W1-H, W2-H (4 D.)						
	Upper						
	(codes L1B, K1B, L5B, H1B, H5B)	1	7584-5 AB4				
	(codes L1Q, K1Q, H1Q)	1	7584-5 AQ4				
	(codes L1R, K1R, L5R, H1R, H5R)	1	7584-5 AR5				
	(codes L1T, K1T, L2T, K2T, L5T, L8T, K8T, T8T, H1T, H5T)	1	7584-5 VT6				
	Lower						
	(codes L1B, K1B, L5B, H1B, H5B)	1	7588-9 AB4				
	(codes L1Q, K1Q, H1Q)	1	7588-9 AQ4				
	(codes L1R, K1R, L5R, H1R, H5R)	1	7588-9 AR5				
	(codes L1T, K1T, L2T, K2T, L5T, L8T, K8T, T8T, H1T, H5T)	1	7588-9 VT6				
	W2-H						
	(codes H1B, H4B)	1	---- ---	---- ---	---- ---	3320-1 ABB	3322-3 ABB
	(codes H1Q, H4Q)	1	---- ---	---- ---	---- ---	3320-1 AQQ	3322-3 AQQ
	(codes H1R, H4R)	1	---- ---	---- ---	---- ---	3320-1 ARR	3322-3 ARR
	(codes H1T, H4T)	1	---- ---	---- ---	---- ---	3320-1 ATT	3322-3 ATT
	W2-P (w/o mylar strips)						
	(code P4B)	1	---- ---	---- ---	---- --	3324-5 ABB	3326-7 ABB
	(code P4Q)	1	---- ---	---- ---	---- ---	3324-5 AQQ	3326-7 AQQ
	(code P4R)	1	---- ---	---- ---	---- ---	3324-5 ARR	3326-7 ARR
	(code P4T)	1	---- ---	---- ---	---- ---	3324-5 ATT	3326-7 ATT
	(code P4Y)	1	---- ---	---- ---	---- ---	3324-5 AYW	3326-7 AYW
	(code P4X)	1	---- ---	---- ---	---- ---	3324-5 AXX	3326-7 AXX
	(w/mylar strips)						
	(code P4B)	1	---- ---	---- ---	---- ---	3488-9 ABB	3490-1 ABB
	(code P4Q)	1	---- ---	---- ---	---- ---	3488-9 AQQ	3490-1 AQQ
	(code P4R)	1	---- ---	---- ---	---- ---	3488-9 ARR	3490-1 ARR
	(code P4T)	1	---- ---	---- ---	---- ---	3488-9 ATT	3490-1 ATT
	(code P4Y)	1	---- ---	---- ---	---- ---	3488-9 AYW	3490-1 AYW
	(code P4X)	1	---- ---	---- ---	---- ---	3488-9 AXX	3490-1 AXX
	Screw and Washer (attaching)	2	---- ---	---- ---	---- ---	6023 476	6023 476
	Screw and Washer	4	6024 199	---- ---	---- ---	6023 381	
	D2-L						
	(codes L1B, K1B, L5B, L9B)	1	2062-3 AB4	2066-7 AB4	---- ---	3350-1 ABB	
	(codes L1Q, K1Q)	1	2062-3 AQ4	2066-7 AQ4	---- ---	3350-1 AQQ	
	(codes L1R, K1R, L5R, L9R)	1	2062-3 AR7	2066-7 AR7	---- ---	3350-1 ARR	
	(codes L1T, K1T, L2T, K2T, L8T, K8T, L5T)	1	2062-3 AT6	2066-7 AT6	---- ---	3350-1 ATT	
	(codes L1Y, K1Y)	1	2062-3 AY3	2066-7 AY3	---- ---	3350-1 AYY	
	(codes L9X, L4X)	1	---- ---	---- ---	---- ---	3350-1 AXX	
	(codes L4B, L9B)	1	2062-3 AB4	---- ---	---- ---	---- ---	3368-9 ABB
	(code L4Q)	1	---- ---	---- ---	---- ---	---- ---	3368-9 AQQ
	(codes L4R, L9R)	1	2062-3 AR7	---- ---	---- ---	---- ---	3368-9 ARR
	(code L4T)	1	2062-3 AT6	---- ---	---- ---	---- ---	3368-9 ATT
	(code L4Y)	1	---- ---	---- ---	---- ---	---- ---	3368-9 AYY
	(code L9X)	1	2062-3 AX9	---- ---	---- ---	---- ---	3368-9 AXX
	(code K2A)	1	2062-3 AA6				
	D2-L, D2-H (6 window sedan)						
	(codes L3B, H1B, H4B)	1	2064-5 AB4	2066-7 AB4	---- ---	3398-9 ABB	3312-3 ABB
	(codes H1Q, H4Q)	1	2064-5 AQ4	2066-7 AQ4	---- ---	3398-9 AQQ	3312-3 AQQ
	(codes L3R, H1R, H4R)	1	2064-5 AR7	2066-7 AR7	---- ---	3398-9 ARR	3312-3 ARR

★ Indicates use as required.
⊟ Indicates parts not listed in any previous parts book.
Right and left part numbers are on same line, *first number is right, second number is left.*
• Indicates change or addition.

Printed in U.S.A.
Prices and specifications subject to change without notice.
April 1966, Supersedes May 1965.

MyMopar.com

CODE	REMARKS	PER CAR	SED.	4D H.T	STA. WGN.	2D H.T	CV. CP.
23-101-3	PANEL, Quarter Trim - Cont'd						
	D2-L, D2-H (6 window sedan)						
	(codes L3T, H1T, H4T)	1	2064-5 AT6	2066-7 AT6	---- ---	3398-9 ATT	3312-3 ATT
	(codes H1Y)	1	2064-5 AY3				
	(codes L3X, H4X)	1	---- ---	2066-7 AX9	---- ---	3398-9 AOX	3312-3 AOX
	D2-P						
	(code P1B)	1	---- ---	---- ---	---- ---	3396-7 ABB	
	(code P1Q)	1	---- ---	---- ---	---- ---	3396-7 AQQ	
	(code P4R)	1	---- ---	---- ---	---- ---	3310-1 ARR	
	(code P4T)	1	---- ---	---- ---	---- ---	3310-1 ATT	
	(code P4U)	1	---- ---	---- ---	---- ---	3310-1 AOU	
	(code P4X)	1	---- ---	---- ---	---- ---	3310-1 AOX	
	(code P4W)	1	---- ---	---- ---	---- ---	3310-1 AXW	
	Fastener	★	6000 365	6000 365	---- ---	6000 365	6000 365
23-101-14	COVER, Upper Quarter Front Trim						
	(paint as required)						
	W1-L, W2-L, W1-H, W2-H	1	---- ---	---- ---	2044-5 VT6		
	Screw (attaching)	4	---- ---	---- ---	9417 930		
23-101-33	BRACKET, Quarter Trim Panel Support						
	W2	2	---- ---	---- ---	---- ---	---- ---	2490 484
23-102-3	PANEL, Shelf Trim						
	(paint as required)						
	W1, W2	1	1319 AT6	---- ---	---- ---	1318 AT6	
	Fastener	2	6000 903	---- ---	---- ---	6000 903	
	(paint as required)						
	D2-L, D2-H	1	1313 AT6	1300 AT6	---- ---	1312 AT6	
	D2-H (6 window sedan)	1	1302 AT6				
	Fastener	4	6000 365	6000 365	---- ---	6000 365	
23-103-3	PANEL, Visor Trim						
	W1, W2	2	---- ---	---- ---	1131 AW2		
	(codes L1B, K1B, L5B, H1B, P4B)	2	1118 AB3	---- ---	---- ---	1119 AB3	
	(codes L1Q, K1Q, H1Q, P4Q)	2	1118 AQ3	---- ---	---- ---	1119 AQ3	
	(codes L1R, K1R, H1R, P4R, P4Y)	2	1118 AW2	---- ---	---- ---	1119 AW2	
	(codes L1T, K1T, L2T, K2T, L5T, L8T, K8T, T8T, H1T, P4T)	2	1118 AT3	---- ---	---- ---	1119 AT3	
	(code P4X)	2	---- ---	---- ---	---- ---	1119 AX9	
	W2-H, W2-P						
	(codes H4B, P4B)	2	---- ---	---- ---	---- ---	---- ---	1120 AB4
	(codes H4Q, P4Q)	2	---- ---	---- ---	---- ---	---- ---	1120 AQ4
	(code H4R)	2	---- ---	---- ---	---- ---	---- ---	1120 AR5
	(code P4R)	2	---- ---	---- ---	---- ---	---- ---	1120 AR7
	(codes H4T, P4T)	2	---- ---	---- ---	---- ---	---- ---	1120 VT6
	(code P4Y)	2	---- ---	---- ---	---- ---	---- ---	1120 AW3
	(code P4X)	2	---- ---	---- ---	---- ---	---- ---	1120 VX9
	D2 (perforated cardboard)						
	(w/o dual air cond.)						
	(codes L4B, H4B)	2	---- ---	---- ---	*1111 AB3		
	(codes L4Q, H4Q)	2	---- ---	---- ---	*1111 AQ3		
	(codes L4T, H4T)	2	---- ---	---- ---	*1111 AT3		
	(codes L4Y, H4Y)	2	---- ---	---- ---	*1111 AY3		
	(code H4R)	2	---- ---	---- ---	*1111 AR7		
	D2-L (perforated cardboard)						
	(w/air conditioning)						
	(w/extruded vinyl binding)	2	---- ---	---- ---	1112 AW2		
	w/imitation leather bindings)	2	---- ---	---- ---	1115 AW2		

★ Indicates use as required.
⊟ Indicates parts not listed in any previous parts book.
April 1966, Supersedes May 1965.

Printed in U.S.A.
Prices and specifications subject to change without notice.
Right and left part numbers are on same line, first number is right, second number is left.
* Indicates change or addition.

MyMopar.com

CODE	REMARKS	PER CAR	SED.	4D H.T	STA. WGN.	2D H.T	CV. CP.
23-103-3	PANEL, Visor Trim - Cont'd						
	D2-H (foam covered)						
	(w/air conditioning)						
	(codes H4B, H4Q, H4R, H4T, H4Y)	2	---- ---	---- ---	*1112 AW2		
	D2						
	(codes L1B, L3B, L5B, K1B, L9B, H1B, H4B)	2	1104 AB3	1104 AB3	---- ---	1104 AB3	
	(codes L1Q, K1Q, H1Q, H4Q)	2	1104 AQ3	1104 AQ3	---- ---	1104 AQ3	
	(codes L1R, L3R, L5R, K1R, L9R, H1R, H4R)	2	1104 AW2	1104 AW2	---- ---	1104 AR7	
	(codes L1T, K1T, L2T, L3T, K2T, L8T, K8T, L5T, H1T, H4T)	2	1104 AT3	1104 AT3	---- ---	1104 AT3	
	(codes L1Y, K1Y, H1Y, H4Y)	2	1104 AY3	1104 AY3	---- ---	1104 AY3	
	(codes L3X, L9X)	2	---- ---	---- ---	---- ---	1104 AX9	
	(codes L2A, K2A, L8A, K8A)	2	1104 AA2				
	D2-L, D2-H						
	(codes L4B, L9B, H4B)	2	---- ---	---- ---	---- ---	---- ---	1107 AB4
	(codes L4Q, H4Q)	2	---- ---	---- ---	---- ---	---- ---	1107 AQ4
	(codes L4R, L9R, H4R)	2	---- ---	---- ---	---- ---	---- ---	1107 AR7
	(codes L4T, H4T)	2	---- ---	---- ---	---- ---	---- ---	1107 AT6
	(codes L9X, H4X)	2	---- ---	---- ---	---- ---	---- ---	1107 AX9
	(code L4Y)	2	---- ---	---- ---	---- ---	---- ---	1107 AY3
	D2-H, D2-P (vinyl covered)						
	(codes H1B, P1B, H4B)	2	---- ---	1116 AB3	---- ---	1116 AB3	
	(codes H4R, P4W)	2	---- ---	1116 AW2	---- ---	1116 AW2	
	(codes H4Q, P1Q)	2	---- ---	1116 AQ3	---- ---	1116 AQ3	
	(code H4T)	2	---- ---	1116 AT3	---- ---	1116 AT3	
	(codes H4X, P4X)	2	---- ---	1116 AX9	---- ---	1116 AX9	
	(code P4R)	2	---- ---	---- ---	---- ---	1116 AR7	
	(code P4T)	2	---- ---	---- ---	---- ---	1116 AT7	
	(code P4U)	2	---- ---	---- ---	---- ---	1116 AU7	
	(foam covered)						
	(codes H4B, P1B)	2	---- ---	*1113 AB4	---- ---	*1113 AB4	
	(code H4R)	2	---- ---	*1113 AW2	*1113 AW2		
	(codes P1Q, H4Q)	2	---- ---	---- ---	*1113 AQ4	*1113 AQ4	
	(code H4T)	2	---- ---	*1113 AT6	*1113 AT6	*1113 AT6	
	(code H4Y)	2	---- ---	---- ---	*1113 AT4		
	(codes H4X, P4X)	2	---- ---	*1113 AA2	---- ---	*1113 AA2	
	(codes H4R, P4R)	2	---- ---	---- ---	---- ---	*1113 AR5	
	(code P4T)	2	---- ---	---- ---	---- ---	*1113 AT5	
	(code P4U)	2	---- ---	---- ---	---- ---	*1113 AAU	
23-103-10	ARM and BRACKET, Visor						
	W1, W2	1	2490 788-9	---- ---	2490 788-9	2490 788-9	2483 082-3
	D2	1	2581 292-3	2581 292-3	2581 292-3	2581 292-3	
	Washer (tension)	2	6000 106	6000 106	6000 106	6000 106	
23-103-18	SPACER, Windshield Visor Bracket						
	W1, W2	2	---- ---	---- ---	2581 373		
23-103-48	SUPPORT, Visor Inner						
	D2 (use w/padded visor only)	2	2162 628	2162 628	2162 628	2162 628	
23-108-4	CUSHION, Front Seat						
	W1-L, W2-L (2 D.)						
	(codes L1B, K1B)	1	5393 A1B				
	(codes L1Q, K1Q)	1	5393 A1Q				
	(codes L1R, K1R)	1	5393 A1R				
	(codes L1T, K1T)	1	5393 A1T				
	(code L2T)	1	5380 A2T				
	(code L8T)	1	5389 A8T				

★ Indicates use as required.
B Indicates parts not listed in any previous parts book.
Right and left part numbers are on same line, first number is right, second number is left.
* Indicates change or addition.

MyMopar.com

Printed in U.S.A.
Prices and specifications subject to change without notice.
April 1966, Supersedes May 1965.

CODE	REMARKS	PER CAR	SED.	4D H.T	STA. WGN.	2D H.T	CV. CP.
23-108-4	CUSHION, Front Seat - Cont'd						
	W1-L, W2-L (4 D.)						
	(codes L1B, K1B, L4B)	1	5390 A1B	---- ---	5396 A4B		
	(codes L1Q, K1Q, L4Q)	1	5390 A1Q	---- ---	5396 A4Q		
	(codes L1R, K1R, L4R)	1	5390 A1R	---- ---	5396 A4R		
	(codes L1T, K1T, L4T)	1	5390 A1T	---- ---	5396 A4T		
	(code L2T)	1	5383 A2T				
	(code L8T)	1	5386 A8T				
	(code L5B)	1	5405 AB4				
	(code L5R)	1	5405 AR5				
	(code L5T)	1	5405 AT6				
	W1-L, W2-L (2 D.)						
	(w/airfoam pad)						
	(codes L1B, L4B)	1	5394 A1B				
	(codes L1Q, L4Q)	1	5394 A1Q				
	(codes L1R, L4R)	1	5394 A1R				
	(codes L1T, L4T)	1	5394 A1T				
	(w/pad and spring)						
	(codes L1B, K4B)	1	5395 A1B				
	(codes L1Q, K4Q)	1	5395 A1Q				
	(codes L1R, K4R)	1	5395 A1R				
	(codes L1T, K4T)	1	5395 A1T				
	W1-L, W2-L (4 D.)						
	(w/airfoam pad)						
	(codes L1B, L4B)	1	5391 A1B	---- ---	5397 A4B		
	(codes L1Q, L4Q)	1	5391 A1Q	---- ---	5397 A4Q		
	(codes L1R, L4R)	1	5391 A1R	---- ---	5397 A4R		
	(codes L1T, L4T)	1	5391 A1T	---- ---	5397 A4T		
	(w/pad and spring)						
	(codes L1B, L4B)	1	5392 A1B	---- ---	5398 A4B		
	(codes L1Q, L4Q)	1	5392 A1Q	---- ---	5398 A4Q		
	(codes L1R, L4R)	1	5392 A1R	---- ---	5398 A4R		
	(codes L1T, L4T)	1	5392 A1T	---- ---	5398 A4T		
	W1-L, W2-L (2 D.)						
	(w/airfoam pad)						
	(code L2T)	1	5381 A2T				
	(code L8T)	1	5409 A8T				
	(w/heavy duty spring and airfoam pad)						
	(codes L2T, K2T)	1	5382 A2T				
	(codes L8T, K8T)	1	5410 A8T				
	W1-L, W2-L (4 D.)						
	(w/airfoam pad)						
	(code L2T)	1	5384 A2T				
	(code L8T)	1	5387 A8T				
	(w/heavy duty spring and airfoam pad)						
	(codes L2T, K2T)	1	5385 A2T				
	(codes L8T, K8T, T8T)	1	5388 A8T				
	W1-H, W2-H						
	(codes L5B, H5B, H4B)	1	5405 AB4	---- ---	5405 ABB		
	(codes L5R, H5R, H4R)	1	5405 AR5	---- ---	5405 ARR		
	(codes L5T, H5T, H4T)	1	5405 AT6	---- ---	5405 ATT		
	(code H4Q)	1	---- ---	---- ---	5405 AQQ		
	(codes H1B, H4B)	1	5407 A1B	---- ---	---- ---	5417 A1B	5415 A4B
	(codes H1Q, H4Q)	1	5407 A1Q	---- ---	---- ---	5417 A1Q	5415 A4Q
	(codes H1R, H4R)	1	5407 A1R	---- ---	---- ---	5417 A1R	5415 A4R
	(codes H1T, H4T)	1	5407 A1T	---- ---	---- ---	5417 A1T	5415 A4T
	W2-P						
	(code P4B)	1	---- ---	---- ---	---- ---	5412-3 A4B	5412-3 A4B
	(code P4Q)	1	---- ---	---- ---	---- ---	5412-3 A4Q	5412-3 A4Q
	(code P4R)	1	---- ---	---- ---	---- ---	5412-3 A4R	5412-3 A4R

★ Indicates use as required.
⊟ Indicates parts not listed in any previous parts book.
April 1966, Supersedes May 1965.

Printed in U.S.A.
Prices and specifications subject to change without notice.
Right and left part numbers are on same line, first number is right, second number is left.
* Indicates change or addition.

MyMopar.com

CODE	REMARKS	PER CAR	SED.	4D H.T	STA. WGN.	2D H.T	CV. CP.
23-108-4	CUSHION, Front Seat - Cont'd						
	W2-P						
	(code P4T)	1	---- ---	---- ---	---- ---	5412-3 A4T	5412-3 A4T
	(code P4X)	1	---- ---	---- ---	---- ---	5412-3 A4X	5412-3 A4X
	(code P4Y)	1	---- ---	---- ---	---- ---	5412-3 A4Y	5412-3 A4Y
	D2-L (Refer to Distribution Drawing Type "A")						
	(codes L1B, K1B)	1	*5424 A1B	*5424 A1B	---- ---	*5401 A1B	
	(codes L1Q, K1Q)	1	*5424 A1Q	*5424 A1Q	---- ---	*5401 A1Q	
	(codes L1R, K1R)	1	*5424 A1R	*5424 A1R	---- ---	*5401 A1R	
	(codes L1T, K1T)	1	*5424 A1T	*5424 A1T	---- ---	*5401 A1T	
	(codes L1Y, K1Y)	1	*5424 A1Y	*5424 A1Y	---- ---	*5401 A1Y	
	(w/airfoam pad and std. springs)						
	(codes L1B, K1B)	1	*5425 A1B	*5425 A1B	---- ---	*5402 A1B	
	(codes L1Q, K1Q)	1	*5425 A1Q	*5425 A1Q	---- ---	*5402 A1Q	
	(codes L1R, K1R)	1	*5425 A1R	*5425 A1R	---- ---	*5402 A1R	
	(codes L1T, K1T)	1	*5425 A1T	*5425 A1T	---- ---	*5402 A1T	
	(codes L1Y, K1Y)	1	*5425 A1Y	*5425 A1Y	---- ---	*5402 A1Y	
	(w/airfoam pad and heavy duty springs)						
	(codes L1B, K1B)	1	*5473 A1B				
	(codes L1Q, K1Q)	1	*5473 A1Q				
	(codes L1R, K1R)	1	*5473 A1R				
	(codes L1T, K1T)	1	*5473 A1T				
	(codes L1Y, K1Y)	1	*5473 A1Y				
	(elec. seat adj)						
	(codes L1B, K1B)	1	*5399 A1B	*5399 A1B	---- ---	*5403 A1B	
	(codes L1Q, K1Q)	1	*5399 A1Q	*5399 A1Q	---- ---	*5403 A1Q	
	(codes L1R, K1R)	1	*5399 A1R	*5399 A1R	---- ---	*5403 A1R	
	(codes L1T, K1T)	1	*5399 A1T	*5399 A1T	---- ---	*5403 A1T	
	(codes L1Y, K1Y)	1	*5399 A1Y	*5399 A1Y	---- ---	*5403 A1Y	
	(elec. seat adj. and airfoam pad)						
	(codes L1B, K1B)	1	*5400 A1B	*5400 A1B	---- ---	*5404 A1B	
	(codes L1Q, K1Q)	1	*5400 A1Q	*5400 A1Q	---- ---	*5404 A1Q	
	(codes L1R, K1R)	1	*5400 A1R	*5400 A1R	---- ---	*5404 A1R	
	(codes L1T, K1T)	1	*5400 A1T	*5400 A1T	---- ---	*5404 A1T	
	(codes L1Y, K1Y)	1	*5400 A1Y	*5400 A1Y	---- ---	*5404 A1Y	
	(Refer to Distribution Drawing Type "B")						
	(codes L1B, K1B)	1	⊟8046 A1B	⊟8046 A1B	---- ---	⊟8032 A1B	
	(codes L1Q, K1Q)	1	⊟8046 A1Q	⊟8046 A1Q	---- ---	⊟8032 A1Q	
	(codes L1R, K1R)	1	⊟8046 A1R	⊟8046 A1R	---- ---	⊟8032 A1R	
	(codes L1T, K1T)	1	⊟8036 A1T	⊟8046 A1T	---- ---	⊟8032 A1T	
	(codes L1Y, K1Y)	1	⊟8046 A1Y	⊟8046 A1Y	---- ---	⊟8032 A1Y	
	(w/airfoam pad and std. springs)						
	(codes L1B, K1B)	1	⊟8047 A1B	⊟8047 A1B	---- ---	⊟8033 A1B	
	(codes L1Q, K1Q)	1	⊟8047 A1Q	⊟8047 A1Q	---- ---	⊟8033 A1Q	
	(codes L1R, K1R)	1	⊟8047 A1R	⊟8047 A1R	---- ---	⊟8033 A1R	
	(codes L1T, K1T)	1	⊟8047 A1T	⊟8047 A1T	---- ---	⊟8033 A1T	
	(codes L1Y, K1Y)	1	⊟8047 A1Y	⊟8047 A1Y	---- ---	⊟8033 A1Y	
	(w/airfoam pad and heavy duty springs)						
	(codes L1B, K1B)	1	⊟8048 A1B				
	(codes L1Q, K1Q)	1	⊟8048 A1Q				
	(codes L1R, K1R)	1	⊟8048 A1R				
	(codes L1T, K1T)	1	⊟8048 A1T				
	(codes L1Y, K1Y)	1	⊟8048 A1Y				

★ Indicates use as required.
⊟ Indicates parts not listed in any previous parts book.
Right and left part numbers are on same line, first number is right, second number is left.
* Indicates change or addition.

MyMopar.com

Printed in U.S.A.
Prices and specifications subject to change without notice.
May 1965, Supersedes Sept. 4, 1964.

CODE	REMARKS	PER CAR	SED.	4D H.T	STA. WGN.	2D H.T	CV. CP.
23-108-4	CUSHION, Front Seat - Cont'd						
	D2-L (Refer to Distribution Drawing Type "B")						
	(elec. seat adj.)						
	(codes L1B, K1B)	1	⊟8049 A1B	⊟8049 A1B	---- ---	⊟8034 A1B	
	(codes L1Q, K1Q)	1	⊟8049 A1Q	⊟8049 A1Q	---- ---	⊟8034 A1Q	
	(codes L1R, K1R)	1	⊟8049 A1R	⊟8049 A1R	---- ---	⊟8034 A1R	
	(codes L1T, K1T)	1	⊟8049 A1T	⊟8049 A1T	---- ---	⊟8034 A1T	
	(codes L1Y, K1Y)	1	⊟8049 A1Y	⊟8049 A1Y	---- ---	⊟8034 A1Y	
	(elec. seat and airfoam pad)						
	(codes L1B, K1B)	1	⊟8050 A1B	⊟8050 A1B	---- ---	⊟8035 A1B	
	(codes L1Q, K1Q)	1	⊟8050 A1Q	⊟8050 A1Q	---- ---	⊟8035 A1Q	
	(codes L1R, K1R)	1	⊟8050 A1R	⊟8050 A1R	---- ---	⊟8035 A1R	
	(codes L1T, K1T)	1	⊟8050 A1T	⊟8050 A1T	---- ---	⊟8035 A1T	
	(codes L1Y, K1Y)	1	⊟8050 A1Y	⊟8050 A1Y	---- ---	⊟8035 A1Y	
	D2-L						
	(code L4B)	1	*5432 A4B				
	(code L4R)	1	*5432 A4R				
	(code L4T)	1	*5432 A4T				
	(code L4X)	1	*5432 A4X				
	(code L3B)	1	---- ---	⊟8007 A3B			
	(code L3R)	1	---- ---	⊟8007 A3R			
	(code L3T)	1	---- ---	⊟8007 A3T			
	(code L3X)	1	---- ---	⊟8007 A3X			
	(w/airfoam pad)						
	(code L3B)	1	---- ---	⊟8008 A3B			
	(code L3R)	1	---- ---	⊟8008 A3R			
	(code L3T)	1	---- ---	⊟8008 A3T			
	(code L3X)	1	---- ---	⊟8008 A3X			
	(elec. seats)						
	(code L3B)	1	---- ---	⊟8009 A3B			
	(code L3R)	1	---- ---	⊟8009 A3R			
	(code L3T)	1	---- ---	⊟8009 A3T			
	(code L3X)	1	---- ---	⊟8009 A3X			
	(elec. seats w/airfoam pad)						
	(code L3B)	1	---- ---	⊟8010 A3B			
	(code L3R)	1	---- ---	⊟8010 A3R			
	(code L3T)	1	---- ---	⊟8010 A3T			
	(code L3X)	1	---- ---	⊟8010 A3X			
	D2-L						
	(code L4B)	1	---- ---	---- ---	*5432 A4B		
	(code L4Q)	1	---- ---	---- ---	*5432 A4Q		
	(code L4R)	1	---- ---	---- ---	*5432 A4R		
	(code L4T)	1	---- ---	---- ---	*5432 A4T		
	(code L4Y)	1	---- ---	---- ---	*5432 A4Y		
	(code L5B)	1	5441 A5B				
	(code L5R)	1	5441 A5R				
	(code L5T)	1	5441 A5T				
	(code L2T)	1	7431 A2T				
	(code L8T)	1	7353 A8T				
	(codes L2A, K2A)	1	⊟7782 A2A				
	(pattern grained vinyl)						
	(code L4B)	1	---- ---	---- ---	---- ---	---- ---	*5428 A4B
	(code L4Q)	1	---- ---	---- ---	---- ---	---- ---	*5428 A4Q
	(code L4R)	1	---- ---	---- ---	---- ---	---- ---	*5428 A4R
	(code L4T)	1	---- ---	---- ---	---- ---	---- ---	*5428 A4T
	(code L4Y)	1	---- ---	---- ---	---- ---	---- ---	*5428 A4Y
	(plain vinyl)						
	(code L4B)	1	---- ---	---- ---	---- ---	⊟7675 A4B	⊟7675 A4B
	(code L4Q)	1	---- ---	---- ---	---- ---	---- ---	⊟7675 A4Q
	(code L4R)	1	---- ---	---- ---	---- ---	⊟7675 A4R	⊟7675 A4R
	(code L4T)	1	---- ---	---- ---	---- ---	⊟7675 A4T	⊟7675 A4T

★ Indicates use as required.
⊟ Indicates parts not listed in any previous parts book.
May 1965, Supersedes Sept. 4, 1964.

MyMopar.com

Printed in U.S.A.
Prices and specifications subject to change without notice.
Right and left part numbers are on same line, first number is right, second number is left.
* Indicates change or addition.

CODE	REMARKS	PER CAR	SED.	4D H.T	STA. WGN.	2D H.T	CV. CP.
23-108-4	CUSHION, Front Seat - Cont'd						
	D2-L						
	(pattern grained vinyl)						
	(code L4Y)	1	---- ---	---- ---	---- ---	---- ---	⊟7675 A4Y
	(code L4X)	1	---- ---	---- ---	---- ---	⊟7675 A4X	
	(code L9B)	1	---- ---	---- ---	---- ---	⊟7503 A9B	
	(code L9R)	1	---- ---	---- ---	---- ---	⊟7503 A9R	
	(code L9X)	1	---- ---	---- ---	---- ---	⊟7503 A9X	
	(plain vinyl)						
	(code L9B)	1	---- ---	---- ---	---- ---	⊟7689 A9B	
	(code L9R)	1	---- ---	---- ---	---- ---	⊟7689 A9R	
	(code L9X)	1	---- ---	---- ---	---- ---	⊟7689 A9X	
	D2-L (w/electric seats)						
	(code L4B)	1	*5434 A4B				
	(code L4R)	1	*5434 A4R				
	(code L4T)	1	*5434 A4T				
	(code L4X)	1	⊟5434 A4X				
	(code L4B)	1	---- ---	---- ---	*5434 A4B		
	(code L4Q)	1	---- ---	---- ---	*5434 A4Q		
	(code L4R)	1	---- ---	---- ---	*5434 A4R		
	(code L4T)	1	---- ---	---- ---	*5434 A4T		
	(code L4Y)	1	---- ---	---- ---	*5434 A4Y		
	(code L5B)	1	5436 A5B				
	(code L5R)	1	5436 A5R				
	(code L5T)	1	5436 A5T				
	(pattern grained vinyl)						
	(code L4B)	1	---- ---	---- ---	---- ---	---- ---	*5430 A4B
	(code L4Q)	1	---- ---	---- ---	---- ---	---- ---	*5430 A4Q
	(code L4R)	1	---- ---	---- ---	---- ---	---- ---	*5430 A4R
	(code L4T)	1	---- ---	---- ---	---- ---	---- ---	*5430 A4T
	(code L4Y)	1	---- ---	---- ---	---- ---	---- ---	*5430 A4Y
	(plain vinyl)						
	(code L4B)	1	---- ---	---- ---	---- ---	⊟7742 A4B	⊟7742 A4B
	(code L4Q)	1	---- ---	---- ---	---- ---	---- ---	⊟7742 A4Q
	(code L4R)	1	---- ---	---- ---	---- ---	⊟7742 A4R	⊟7742 A4R
	(code L4T)	1	---- ---	---- ---	---- ---	⊟7742 A4T	⊟7742 A4T
	(code L4Y)	1	---- ---	---- ---	---- ---	---- ---	⊟7742 A4Y
	(code L4X)	1	---- ---	---- ---	---- ---	⊟7742 A4X	
	(pattern grained vinyl)						
	(code L9B)	1	---- ---	---- ---	---- ---	⊟7638 A9B	
	(code L9R)	1	---- ---	---- ---	---- ---	⊟7638 A9R	
	(code L9X)	1	---- ---	---- ---	---- ---	⊟7638 A9X	
	(plain vinyl)						
	(code L9B)	1	---- ---	---- ---	---- ---	⊟7690 A9B	
	(code L9R)	1	---- ---	---- ---	---- ---	⊟7690 A9R	
	(code L9X)	1	---- ---	---- ---	---- ---	⊟7690 A9X	
	D2-L (w/airfoam pad)						
	(code L4B)	1	*5433 A4B				
	(code L4R)	1	*5433 A4R				
	(code L4T)	1	*5433 A4T				
	(code L4X)	1	⊟5433 A4X				
	(code L4B)	1	---- ---	---- ---	*5433 A4B		
	(code L4Q)	1	---- ---	---- ---	*5433 A4Q		
	(code L4R)	1	---- ---	---- ---	*5433 A4R		
	(code L4T)	1	---- ---	---- ---	*5433 A4T		
	(code L4Y)	1	---- ---	---- ---	*5433 A4Y		
	(pattern grained vinyl)						
	(code L4B)	1	---- ---	---- ---	---- ---	---- ---	*5429 A4B
	(code L4Q)	1	---- ---	---- ---	---- ---	---- ---	*5429 A4Q
	(code L4R)	1	---- ---	---- ---	---- ---	---- ---	*5429 A4R
	(code L4T)	1	---- ---	---- ---	---- ---	---- ---	*5429 A4T
	(code L4Y)	1	---- ---	---- ---	---- ---	---- ---	*5429 A4Y

★ Indicates use as required.
⊟ Indicates parts not listed in any previous parts book.
Right and left part numbers are on same line, first number is right, second number is left.
* Indicates change or addition.

MyMopar.com

Printed in U.S.A.
Prices and specifications subject to change without notice.
May 1965, Supersedes Sept. 4, 1964.

CODE	REMARKS	PER CAR	SED.	4D H.T	STA. WGN.	2D H.T	CV. CP.
23-108-4	CUSHION, Front Seat - Cont'd						
	D2-L (plain vinyl)						
	(code L4B)	1	---- ---	---- ---	---- ---	7741 A4B	7741 A4B
	(code L4Q)	1	---- ---	---- ---	---- ---	---- ---	7741 A4Q
	(code L4R)	1	---- ---	---- ---	---- ---	7741 A4R	7741 A4R
	(code L4T)	1	---- ---	---- ---	---- ---	7741 A4T	7741 A4T
	(code L4Y)	1	---- ---	---- ---	---- ---	---- ---	7741 A4Y
	(code L4X)	1	---- ---	---- ---	---- ---	7741 A4X	
	D2-L (w/airfoam pad)						
	(code L5B)	1	5440 A5B				
	(code L5R)	1	5440 A5R				
	(code L5T)	1	5440 A5T				
	(code L2T)	1	7432 A2T				
	(code L8T)	1	7354 A8T				
	D2-L (w/heavy duty spring and airfoam pad)						
	(code L5B)	1	5442 A5B				
	(code L5R)	1	5442 A5R				
	(code L5T)	1	5442 A5T				
	(codes L2T, K2T)	1	7433 A2T				
	(codes L8T, K8T, T8T)	1	7355 A8T				
	D2-L (w/airfoam pad and electric seats)						
	(code L4B)	1	5435 A4B				
	(code L4R)	1	5435 A4R				
	(code L4T)	1	5435 A4T				
	(code L4X)	1	5435 A4X				
	(code L4B)	1	---- ---	---- ---	5435 A4B		
	(code L4Q)	1	---- ---	---- ---	5435 A4Q		
	(code L4R)	1	---- ---	---- ---	5435 A4R		
	(code L4T)	1	---- ---	---- ---	5435 A4T		
	(code L4Y)	1	---- ---	---- ---	5435 A4Y		
	(code L5B)	1	5482 A5B				
	(code L5R)	1	5482 A5R				
	(code L5T)	1	5482 A5T				
	(pattern grained vinyl)						
	(code L4B)	1	---- ---	---- ---	---- ---	---- ---	5431 A4B
	(code L4Q)	1	---- ---	---- ---	---- ---	---- ---	5431 A4Q
	(code L4R)	1	---- ---	---- ---	---- ---	---- ---	*5431 A4R
	(code L4T)	1	---- ---	---- ---	---- ---	---- ---	5431 A4T
	(code L4Y)	1	---- ---	---- ---	---- ---	---- ---	5431 A4Y
	(plain vinyl)						
	(code L4B)	1	---- ---	---- ---	---- ---	7743 A4B	7743 A4B
	(code L4Q)	1	---- ---	---- ---	---- ---	---- ---	7743 A4Q
	(code L4R)	1	---- ---	---- ---	---- ---	7743 A4R	7743 A4R
	(code L4T)	1	---- ---	---- ---	---- ---	7743 A4T	7743 A4T
	(code L4Y)	1	---- ---	---- ---	---- ---	---- ---	7743 A4Y
	(code L4X)	1	---- ---	---- ---	---- ---	7743 A4X	
	D2-H (6 window sedan)						
	(code H1B)	1	7214 A1B				
	(code H1Q)	1	7214 A1Q				
	(code H1R)	1	7214 A1R				
	(code H1T)	1	7214 A1T				
	(code H1Y)	1	7214 A1Y				
	(code H4B)	1	5426 A4B	5426 A4B	5426 A4B	5426 A4B	5426 A4B
	(code H4Q)	1	---- ---	5426 A4Q	5426 A4Q	5426 A4Q	5426 A4Q
	(code H4R)	1	5426 A4R	5426 A4R	5426 A4R	5426 A4R	5426 A4R
	(code H4T)	1	5426 A4T	5426 A4T	5426 A4T	5426 A4T	5426 A4T
	(code H4X)	1	---- ---	5426 A4X	---- ---	5426 A4X	5426 A4X
	(code H4Y)	1	---- ---	---- ---	5426 A4Y		

★ Indicates use as required.
⊟ Indicates parts not listed in any previous parts book.

Printed in U.S.A.
Prices and specifications subject to change without notice.
Right and left part numbers are on same line, first number is right, second number is left.
* Indicates change or addition.

MyMopar.com

CODE	REMARKS	PER CAR	SED.	4D H.T	STA. WGN.	2D H.T	CV. CP.
23-108-4	CUSHION, Front Seat - Cont'd						
	D2-H (6 window sedan) (w/electric seats)						
	(code H1B)	1	7215 A1B				
	(code H1Q)	1	7215 A1Q				
	(code H1R)	1	7215 A1R				
	(code H1T)	1	7215 A1T				
	(code H1Y)	1	7215 A1Y				
	(code H4B)	1	5427 A4B	5427 A4B	5427 A4B	5427 A4B	5427 A4B
	(code H4Q)	1	---- ---	5427 A4Q	5427 A4Q	5427 A4Q	5427 A4Q
	(code H4R)	1	5427 A4R	5427 A4R	5427 A4R	5427 A4R	5427 A4R
	(code H4T)	1	5427 A4T	5427 A4T	5427 A4T	5427 A4T	5427 A4T
	(code H4Y)	1	---- ---	---- ---	5427 A4Y		
	(code H4X)	1	---- ---	5427 A4X	---- ---	5427 A4X	5427 A4X
	Push Nut (seat back to cushion mtg.)	★	6024 203	6024 203	6024 203	6024 203	6024 203
	D2-P						
	(code P1B)	1	---- ---	---- ---	---- ---	7262-3 A1B	
	(code P1Q)	1	---- ---	---- ---	---- ---	7262-3 A1Q	
	(code P4R)	1	---- ---	---- ---	---- ---	7270-1 A4R	
	(code P4T)	1	---- ---	---- ---	---- ---	7270-1 A4T	
	(code P4U)	1	---- ---	---- ---	---- ---	7270-1 A4U	
	(code P4X)	1	---- ---	---- ---	---- ---	7270-1 A4X	
	D2-P (w/elec. seats)						
	(code P1B)	1	---- ---	---- ---	---- ---	7646-7 A1B	
	(code P1Q)	1	---- ---	---- ---	---- ---	7646-7 A1Q	
	(code P4R)	1	---- ---	---- ---	---- ---	*7636-7 A4R	
	(code P4T)	1	---- ---	---- ---	---- ---	*7636-7 A4T	
	(code P4U)	1	---- ---	---- ---	---- ---	*7636-7 A4U	
	(code P4X)	1	---- ---	---- ---	---- ---	*7636-7 A4X	
	(code P4W)	1	---- ---	---- ---	---- ---	*7636-7 A4W	
23-108-5	COVER, Front Seat Cushion						
	W1-L, W2-L (2 D.)						
	(codes L1B, K1B)	1	5844 A1B				
	(codes L1Q, K1Q)	1	5844 A1Q				
	(codes L1R, K1R)	1	5844 A1R				
	(codes L1T, K1T)	1	5844 A1T				
	(codes L2T, K2T)	1	5836 A2T				
	(codes L8T, K8T)	1	5838 A8T				
	W1-L, W2-L (4 D.)						
	(codes L1B, K1B)	1	5843 A1B				
	(codes L1Q, K1Q)	1	5843 A1Q				
	(codes L1R, K1R)	1	5843 A1R				
	(codes L1T, K1T)	1	5843 A1T				
	(codes L2T, K2T)	1	5835 A2T				
	(codes L8T, K8T, T8T)	1	5837 A8T				
	(code L5B)	1	5849 AB4				
	(code L5R)	1	5849 AR5				
	(code L5T)	1	5849 AT6				
	W1-L, W2-L						
	(codes L4B, K4B)	1	---- ---	---- ---	5845 A4B		
	(codes L4Q, K4Q)	1	---- ---	---- ---	5845 A4Q		
	(codes L4R, K4R)	1	---- ---	---- ---	5845 A4R		
	(codes L4T, K4T)	1	---- ---	---- ---	5845 A4T		

★ Indicates use as required.
⊟ Indicates parts not listed in any previous parts book.
Right and left part numbers are on same line, first number is right, second number is left.
* Indicates change or addition.

MyMopar.com

Printed in U.S.A.
Prices and specifications subject to change without notice.
April 1966, Supersedes May 1965.

CODE	REMARKS	PER CAR	SED.	4D H.T	STA. WGN.	2D H.T	CV. CP.
23-108-5	COVER, Front Seat Cushion - Cont'd						
	W1-H, W2-H						
	(code H4Q)	1	---- ---	---- ---	*5849 AQQ		
	(codes L5B, H5B, H4B)	1	*5849 AB4	---- ---	*5849 ABB		
	(codes L5R, H5R, H4R)	1	*5849 AR5	---- ---	*5849 ARR		
	(codes L5T, H5T, H4T)	1	*5849 AT6	---- ---	*5849 ATT		
	W1-H, W2-H						
	(codes H1B, H4B)	1	⊟5850 A1B	---- ---	---- ---	5853 A1B	5852 A4B
	(codes H1Q, H4Q)	1	⊟5850 A1Q	---- ---	---- ---	5853 A1Q	5852 A4Q
	(codes H1R, H4R)	1	⊟5850 A1R	---- ---	---- ---	5853 A1R	5852 A4R
	(codes H1T, H4T)	1	⊟5850 A1T	---- ---	---- ---	5853 A1T	5852 A4T
	W2-P						
	(code P4B)	2	---- ---	---- ---	---- ---	5851 A4B	5851 A4B
	(code P4Q)	2	---- ---	---- ---	---- ---	5851 A4Q	5851 A4Q
	(code P4R)	2	---- ---	---- ---	---- ---	5851 A4R	5851 A4R
	(code P4T)	2	---- ---	---- ---	---- ---	5851 A4T	5851 A4T
	(code P4X)	2	---- ---	---- ---	---- ---	5851 A4X	5851 A4X
	(code P4Y)	2	---- ---	---- ---	---- ---	5851 A4Y	5851 A4Y
	D2-L (Refer to Distribution Drawing Type "A")						
	(codes L1B, K1B, L6B)	1	*5854 A1B	*5854 A1B	---- ---	*5847 A1B	
	(codes L1Q, K1Q, L6Q)	1	*5854 A1Q	*5854 A1Q	---- ---	*5847 A1Q	
	(codes L1R, K1R, L6R)	1	*5854 A1R	*5854 A1R	---- ---	*5847 A1R	
	(codes L1T, K1T, L6T)	1	*5854 A1T	*5854 A1T	---- ---	*5847 A1T	
	(codes L1Y, K1Y)	1	*5854 A1Y	*5854 A1Y	---- ---	*5847 A1Y	
	D2-L (Refer to Distribution Drawing Type "B")						
	(codes L1B, K1B)	1	⊟8051 A1B	⊟8051 A1B	---- ---	⊟8036 A1B	
	(codes L1Q, K1Q)	1	⊟8051 A1Q	⊟8051 A1Q	---- ---	⊟8036 A1Q	
	(codes L1R, K1R)	1	⊟8051 A1R	⊟8051 A1R	---- ---	⊟8036 A1R	
	(codes L1T, K1T)	1	⊟8051 A1T	⊟8051 A1T	---- ---	⊟8036 A1T	
	(codes L1Y, K1Y)	1	⊟8051 A1Y	⊟8051 A1Y	---- ---	⊟8036 A1Y	
	D2-L						
	(code L4B)	1	*5862 A4B				
	(code L4R)	1	*5862 A4R				
	(code L4T)	1	*5862 A4T				
	(code L4X)	1	⊟5862 A4X				
	(code L3B)	1	---- ---	⊟8011 A3B			
	(code L3R)	1	---- ---	⊟8011 A3R			
	(code L3T)	1	---- ---	⊟8011 A3T			
	(code L3X)	1	---- ---	⊟8011 A3X			
	(code L4B)	1	---- ---	---- ---	*5862 A4B		
	(code L4Q)	1	---- ---	---- ---	*5862 A4Q		
	(code L4R)	1	---- ---	---- ---	*5862 A4R		
	(code L4T)	1	---- ---	---- ---	*5862 A4T		
	(code L4Y)	1	---- ---	---- ---	*5862 A4Y		
	(code L5B)	1	5863 A5B				
	(code L5R)	1	5863 A5R				
	(code L5T)	1	5863 A5T				
	(codes L2T, K2T)	1	7434 A2T				
	(codes L8T, K8T, T8T)	1	7356 A8T				
	(codes L2A, K2A)	1	⊟7783 A2A				
	(plain vinyl)						
	(code L4B)	1	---- ---	---- ---	---- ---	⊟7744 A4B	⊟7744 A4B
	(code L4Q)	1	---- ---	---- ---	---- ---	---- ---	⊟7744 A4Q
	(code L4R)	1	---- ---	---- ---	---- ---	⊟7744 A4R	⊟7744 A4R
	(code L4T)	1	---- ---	---- ---	---- ---	⊟7744 A4T	⊟7744 A4T
	(code L4Y)	1	---- ---	---- ---	---- ---	---- ---	⊟7744 A4Y
	(code L4X)	1	---- ---	---- ---	---- ---	⊟7744 A4X	

★ Indicates use as required.
⊟ Indicates parts not listed in any previous parts book.
May 1965, Supersedes Sept. 4, 1964.

Printed in U.S.A.
Prices and specifications subject to change without notice.
Right and left part numbers are on same line, first number is right, second number is left.
* Indicates change or addition.

MyMopar.com

CODE	REMARKS	PER CAR	SED.	4D H.T	STA. WGN.	2D H.T	CV. CP.
23-108-5	COVER, Front Seat Cushion - Cont'd						
	D2-L (plain vinyl)						
	(code L9B)	2	---- ---	---- ---	---- ---	7691 A9B	*7691 A9B
	(code L9R)	2	---- ---	---- ---	---- ---	7691 A9R	*7691 A9R
	(code L9X)	2	---- ---	---- ---	---- ---	7691 A9X	*7691 A9X
	D2-H (6 window sedan)						
	(codes H1B, H4B)	1	7216 A1B	5858 A4B	5858 A4B	5858 A4B	5858 A4B
	(codes H1Q, H4Q)	1	7216 A1Q	5858 A4Q	5858 A4Q	5858 A4Q	5858 A4Q
	(codes H1R, H4R)	1	7216 A1R	5858 A4R	5858 A4R	5858 A4R	5858 A4R
	(codes H1T, H4T)	1	7216 A1T	5858 A4T	5858 A4T	5858 A4T	5858 A4T
	(codes H1Y, H4Y)	1	7216 A1Y	---- ---	5858 A4Y		
	(code H4X)	1	---- ---	5858 A4X	---- ---	5858 A4X	5858 A4X
	(code H4B)	1	5858 A4B				
	(code H4R)	1	5858 A4R				
	(code H4T)	1	5858 A4T				
	D2-P						
	(code P1B)	1	---- ---	---- ---	---- ---	7261 A1B	
	(code P1Q)	1	---- ---	---- ---	---- ---	7261 A1Q	
	(code P4R)	1	---- ---	---- ---	---- ---	7269 A4R	
	(code P4T)	1	---- ---	---- ---	---- ---	7269 A4T	
	(code P4U)	1	---- ---	---- ---	---- ---	7269 A4U	
	(code P4X)	1	---- ---	---- ---	---- ---	7269 A4X	
	(code P4W)	1	---- ---	---- ---	---- ---	7269 A4W	
23-108-6	FLAP, Front Cushion Rear						
	D2						
	(codes L9B, P1B)	1	---- ---	---- ---	---- ---	4112 AB8	
	(code P1Q)	1	---- ---	---- ---	---- ---	4112 AQ8	
	(codes L9R, P1R)	1	---- ---	---- ---	---- ---	4112 AR7	
	(code P4R)	1	---- ---	---- ---	---- ---	4112 AR5	
	(code P4T)	1	---- ---	---- ---	---- ---	4112 AT9	
	(code P4U)	1	---- ---	---- ---	---- ---	4112 AU8	
	(codes L9X, P4X)	1	---- ---	---- ---	---- ---	4112 AX9	
23-108-12	BACK, Front Seat						
	W1-L, W2-L (2 D.)						
	(code L1B)	1	5602-3 A1B				
	(code L1Q)	1	5602-3 A1Q				
	(code L1R)	1	5602-3 A1R				
	(code L1T)	1	5602-3 A1T				
	(code L2T)	1	5576-7 A2T				
	(code L8T)	1	5584-5 A8T				
	W1-L, W2-L (4 D.)						
	(codes L1B, L4B)	1	5594 A1B	---- ---	5597 A4B		
	(codes L1Q, L4Q)	1	5594 A1Q	---- ---	5597 A4Q		
	(codes L1R, L4R)	1	5594 A1R	---- ---	5597 A4R		
	(codes L1T, L4T)	1	5594 A1T	---- ---	5597 A4T		
	(code L5B)	1	5614 AB4				
	(code L5R)	1	5614 AR5				
	(code L5T)	1	5614 AT6				
	(code L2T)	1	5572 A2T				
	(code L8T)	1	5575 A8T				
	W1-L, W2-L (2 D.) (w/airfoam pad and heavy duty spring)						
	(codes L1B, K1B)	1	5604-5 A1B				
	(codes L1Q, K1Q)	1	5604-5 A1Q				
	(codes L1R, K1R)	1	5604-5 A1R				
	(codes L1T, K1T)	1	5604-5 A1T				
	(codes L8T, K8T, T8T) (4 D.)	1	5582 A8T				

★ Indicates use as required.
⊟ Indicates parts not listed in any previous parts book.
Right and left part numbers are on same line, first number is right, second number is left.
* Indicates change or addition.

MyMopar.com

Printed in U.S.A.
Prices and specifications subject to change without notice.
April 1966, Supersedes May 1965.

CODE	REMARKS	PER CAR	SED.	4D H.T	STA. WGN.	2D H.T	CV. CP.
23-108-12	BACK, Front Seat - Cont'd						
	W1-L, W2-L (2 D.)						
	(w/heavy duty spring)						
	(codes L2T, K2T)	1	5580-1 A2T				
	(codes L8T, K8T)	1	5588-9 A8T				
	W1-L, W2-L (4 D.)						
	(w/heavy-duty spring)						
	(codes L1B, K1B, L4B, K4B)	1	5596 A1B	---- ---	5598 A4B		
	(codes L1Q, K1Q, L4Q, K4Q)	1	5596 A1Q	---- ---	5598 A4Q		
	(codes L1R, K1R, L4R, K4R)	1	5596 A1R	---- ---	5598 A4R		
	(codes L1T, K1T, L4T, K4T)	1	5596 A1T	---- ---	5598 A4T		
	(codes L2T, K2T)	1	5574 A2T				
	W1-H, W2-H						
	(codes H1B, H4B)	1	5616 A1B	---- ---	5614 ABB	5622 A1B	5620-1 A4B
	(codes H1Q, H4Q)	1	5616 A1Q	---- ---	5614 AQQ	5622 A1Q	5620-1 A4Q
	(codes H1R, H4R)	1	5616 A1R	---- ---	5614 ARR	5622 A1R	5620-1 A4R
	(codes H1T, H4T)	1	5616 A1T	---- ---	5614 ATT	5622 A1T	5620-1 A4T
	(code H5B)	1	5614 AB4				
	(code H5R)	1	5614 AR5				
	(code H5T)	1	5614 AT6				
	Push-Nut (back to cushion)	2	*6024 203	---- ---	---- ---	*6024 203	*6024 203
	D2-L (Refer to Distribution Drawing Type "A"						
	(codes L1B, K1B)	1	*5626 A1B	*5626 A1B	---- ---	*5608-9 A1B	
	(codes L1Q, K1Q)	1	*5626 A1Q	*5626 A1Q	---- ---	*5608-9 A1Q	
	(codes L1R, K1R)	1	*5626 A1R	*5626 A1R	---- ---	*5608-9 A1R	
	(codes L1T, K1T)	1	*5626 A1T	*5626 A1T	---- ---	*5608-9 A1T	
	(codes L1Y, K1Y)	1	*5626 A1Y	*5626 A1Y	---- ---	*5608-9 A1Y	
	(w/heavy duty springs)						
	(codes L1B, K1B)	1	*5627 A1B	*5627 A1B			
	(codes L1Q, K1Q)	1	*5627 A1Q	*5627 A1Q			
	(codes L1R, K1R)	1	*5627 A1R	*5627 A1R			
	(codes L1T, K1T)	1	*5627 A1T	*5627 A1T			
	(codes L1Y, K1Y)	1	*5627 A1Y	*5627 A1Y			
	D2-L (Refer to Distribution Drawing Type "B"						
	(codes L1B, K1B)	1	⊟8052 A1B	⊟8052 A1B	---- ---	⊟8038-9 A1B	
	(codes L1Q, K1Q)	1	⊟8052 A1Q	⊟8052 A1Q	---- ---	⊟8038-9 A1Q	
	(codes L1R, K1R)	1	⊟8052 A1R	⊟8052 A1R	---- ---	⊟8038-9 A1R	
	(codes L1T, K1T)	1	⊟8052 A1T	⊟8052 A1T	---- ---	⊟8038-9 A1T	
	(codes L1Y, K1Y)	1	⊟8052 A1Y	⊟8052 A1Y	---- ---	⊟8038-9 A1Y	
	(w/heavy duty springs)						
	(codes L1B, K1B)	1	⊟8053 A1B				
	(codes L1Q, K1Q)	1	⊟8053 A1Q				
	(codes L1R, K1R)	1	⊟8053 A1R				
	(codes L1T, K1T)	1	⊟8053 A1T				
	(codes L1Y, K1Y)	1	⊟8053 A1Y				
	D2-L						
	(code L4B)	1	*5612 A4B				
	(code L4R)	1	*5612 A4R				
	(code L4T)	1	*5612 A4T				
	(code L4X)	1	⊟5612 A4X				
	(code L3B)	1	---- ---	⊟8012 A3B			
	(code L3R)	1	---- ---	⊟8012 A3R			
	(code L3T)	1	---- ---	⊟8012 A3T			
	(code L3X)	1	---- ---	⊟8012 A3X			
	(code L4B)	1	---- ---	---- ---	*5612 A4B		
	(code L4Q)	1	---- ---	---- ---	*5612 A4Q		
	(code L4R)	1	---- ---	---- ---	*5612 A4R		
	(codes L4T)	1	---- ---	---- ---	*5612 A4T		
	(code L4Y)	1	---- ---	---- ---	*5612 A4Y		

★ Indicates use as required.
⊟ Indicates parts not listed in any previous parts book.

MyMopar.com

CODE	REMARKS	PER CAR	SED.	4D H.T	STA. WGN.	2D H.T	CV. CP.
23-108-12	BACK, Front Seat - Cont'd						
	D2-L						
	(pattern grained vinyl)						
	(code L4B)	1	---- ---	---- ---	---- ---	---- ---	*5638 A4B
	(code L4Q)	1	---- ---	---- ---	---- ---	---- ---	*5638 A4Q
	(code L4R)	1	---- ---	---- ---	---- ---	---- ---	*5638 A4R
	(code L4T)	1	---- ---	---- ---	---- ---	---- ---	*5638 A4T
	(code L4Y)	1	---- ---	---- ---	---- ---	---- ---	*5638 A4Y
	(plain vinyl)						
	(code L4B)	1	---- ---	---- ---	---- ---	*7680-1 A4B	*7680-1 A4B
	(code L4Q)	1	---- ---	---- ---	---- ---	---- ---	⊟7680-1 A4Q
	(code L4R)	1	---- ---	---- ---	---- ---	⊟7680-1 A4R	⊟7680-1 A4R
	(code L4T)	1	---- ---	---- ---	---- ---	⊟7680-1 A4T	⊟7680-1 A4T
	(code L4Y)	1	---- ---	---- ---	---- ---	---- ---	⊟7680-1 A4Y
	(code L4X)	1	---- ---	---- ---	---- ---	⊟7680-1 A4X	
	(pattern grained vinyl)						
	(code L9B)	2	---- ---	---- ---	---- ---	⊟7506 A9B	
	(code L9R)	2	---- ---	---- ---	---- ---	⊟7506 A9R	
	(code L9X)	2	---- ---	---- ---	---- ---	⊟7506 A9X	
	(plain vinyl)						
	(code L9B)	2	---- ---	---- ---	---- ---	⊟7693 A9B	
	(code L9R)	2	---- ---	---- ---	---- ---	⊟7693 A9R	
	(code L9X)	2	---- ---	---- ---	---- ---	⊟7693 A9X	
	D2-L						
	(code L5B)	1	5644 A5B				
	(code L5R)	1	5644 A5R				
	(code L5T)	1	5644 A5T				
	(code L2T)	1	7428 A2T				
	(code L8T)	1	5542 A8T				
	D2-L (w/heavy duty spring)						
	(code L4B)	1	*5613 A4B				
	(code L4R)	1	*5613 A4R				
	(code L4T)	1	*5613 A4T				
	(code L4X)	1	⊟5613 A4X				
	(code L4B)	1	---- ---	---- ---	*5613 A4B		
	(code L4Q)	1	---- ---	---- ---	*5613 A4Q		
	(code L4R)	1	---- ---	---- ---	*5613 A4R		
	(code L4T)	1	---- ---	---- ---	*5613 A4T		
	(code L4Y)	1	---- ---	---- ---	*5613 A4Y		
	(code L5B)	1	5645 A5B				
	(code L5R)	1	5645 A5R				
	(code L5T)	1	5645 A5T				
	(codes L2T, K2T)	1	7429 A2T				
	(codes L8T, K8T, T8T)	1	5543 A8T				
	(codes L2A, K2A)	1	⊟7785 A2A				
	D2-H (6 window sedan)						
	(codes H1B, H4B)	1	7217 A1B	---- ---	5636-7 A4B		
	(codes H1Q, H4Q)	1	7217 A1Q	---- ---	5636-7 A4Q		
	(codes H1R, H4R)	1	7217 A1R	---- ---	5636-7 A4R		
	(codes H1T, H4T)	1	7217 A1T	---- ---	5636-7 A4T		
	(codes H1Y, H4Y)	1	7217 A1Y	---- ---	5636-7 A4Y		
	D2-H (6 window sedan)						
	(code H4B)	1	5636 A4B	5636 A4B	---- ---	5636 A4B	5636 A4B
	(code H4Q)	1	---- ---	5636 A4Q	---- ---	5636 A4Q	5636 A4Q
	(code H4R)	1	5636 A4R	5636 A4R	---- ---	5636 A4R	5636 A4R
	(code H4T)	1	5636 A4T	5636 A4T	---- ---	5636 A4T	5636 A4T
	(code H4X)	1	---- ---	5636 A4X	---- ---	5636 A4X	5636 A4X
	Push-Nut (back to cushion)	2	---- ---	*6024 203	*6024 203	*6024 203	*6024 203
	D2-P						
	(code P1B)	1	---- ---	---- ---	---- ---	7264 A1B	
	(code P1Q)	1	---- ---	---- ---	---- ---	7264 A1Q	

★ Indicates use as required.
⊟ Indicates parts not listed in any previous parts book.
Right and left part numbers are on same line, first number is right, second number is left.
* Indicates change or addition.

Printed in U.S.A.
Prices and specifications subject to change without notice.
May 1965, Supersedes Sept. 4, 1964.

MyMopar.com

CODE	REMARKS	PER CAR	SED.	4D H.T	STA. WGN.	2D H.T	CV. CP.
23-108-15	SPRING and COVER, Front Seat Back						
	W2-P						
	(code P4B)	2	---- ---	---- ---	---- ---	⊟5740 A4B	⊟5740 A4B
	(code P4Q)	2	---- ---	---- ---	---- ---	⊟5740 A4Q	⊟5740 A4Q
	(code P4R)	2	---- ---	---- ---	---- ---	⊟5740 A4R	⊟5740 A4R
	(code P4T)	2	---- ---	---- ---	---- ---	⊟5740 A4T	⊟5740 A4T
	(code P4X)	2	---- ---	---- ---	---- ---	⊟5740 A4X	⊟5740 A4X
	(code P4Y)	2	---- ---	---- ---	---- ---	⊟5740 A4Y	⊟5740 A4Y
	(code P1B)	2	---- ---	---- ---	---- ---	⊟7265 A1B	
	(code P1Q)	2	---- ---	---- ---	---- ---	⊟7265 A1Q	
	(code P4R)	2	---- ---	---- ---	---- ---	⊟7273 A4R	
	(code P4T)	2	---- ---	---- ---	---- ---	⊟7273 A4T	
	(code P4U)	2	---- ---	---- ---	---- ---	⊟7273 A4U	
	(code P4X)	2	---- ---	---- ---	---- ---	⊟7273 A4X	
	(code P4W)	2	---- ---	---- ---	---- ---	⊟7273 A4W	
	Screw (back to cushion)	2	---- ---	---- ---	---- ---	*6016 005	
23-108-16	COVER, Front Seat Back						
	W1-L, W2-L (2 D.)						
	(codes L1B, K1B)	1	5994-5 A1B				
	(codes L1Q, K1Q)	1	5994-5 A1Q				
	(codes L1R, K1R)	1	5994-5 A1R				
	(codes L1T, K1T)	1	5994-5 A1T				
	(codes L2T, K2T)	1	5968-9 A2T				
	(codes L8T, K8T)	1	5972 A8T				
	W1-L, W2-L (4 D.)						
	(codes L1B, K1B, L4B, K4B)	1	5993 A1B	---- ---	5996 A4B		
	(codes L1Q, K1Q, L4Q, K4Q)	1	5993 A1Q	---- ---	5996 A4Q		
	(codes L1R, K1R, L4R, K4R)	1	5993 A1R	---- ---	5996 A4R		
	(codes L1T, K1T, L4T, K4T)	1	5993 A1T	---- ---	5996 A4T		
	(codes L2T, K2T)	1	5967 A2T				
	(codes L8T, K8T, T8T)	1	5970 A8T				
	(codes L5B, H5B)	1	⊟6001 AB4				
	(codes L5R, H5R)	1	⊟6001 AR5				
	(codes L5T, H5T)	1	⊟6001 AT6				
	W1-H, W2-H (4 D.)						
	(codes H1B, H4B)	1	⊟6002 A1B	---- ---	⊟6001 ABB	*6008-9 A1B	*6006-7 A4B
	(codes H1Q, H4Q)	1	⊟6002 A1Q	---- ---	⊟6001 AQQ	6008-9 A1Q	*6006-7 A4Q
	(codes H1R, H4R)	1	⊟6002 A1R	---- ---	⊟6001 ARR	6008-9 A1R	6006-7 A4R
	(codes H1T, H4T)	1	⊟6002 A1T	---- ---	⊟6001 ATT	6008-9 A1T	6006-7 A4T
	W2-P						
	(code P4B)	2	---- ---	---- ---	---- ---	6004 A4B	6004 A4B
	(code P4Q)	2	---- ---	---- ---	---- ---	6004 A4Q	6004 A4Q
	(code P4R)	2	---- ---	---- ---	---- ---	6004 A4R	6004 A4R
	(code P4T)	2	---- ---	---- ---	---- ---	6004 A4T	6004 A4T
	(code P4X)	2	---- ---	---- ---	---- ---	6004 A4X	6004 A4X
	(code P4Y)	2	---- ---	---- ---	---- ---	6004 A4Y	6004 A4Y
	D2-L (Refer to Distribution Drawing Type "A")						
	(codes L1B, K1B, L6B)	1	*5978 A1B	*5978 A1B	---- ---	*5998-9 A1B	
	(codes L1Q, K1Q, L6Q)	1	*5978 A1Q	*5978 A1Q	---- ---	*5998-9 A1Q	
	(codes L1R, K1R, L6R)	1	*5978 A1R	*5978 A1R	---- ---	*5998-9 A1R	
	(codes L1T, K1T, L6T)	1	*5978 A1T	*5978 A1T	---- ---	*5998-9 A1T	
	(codes L1Y, K1Y)	1	*5978 A1Y	*5978 A1Y	---- ---	*5998-9 A1Y	
	D2-L (Refer to Distribution Drawing Type "B")						
	(codes L1B, K1B)	1	⊟8054 A1B	⊟8054 A1B	---- ---	⊟8040-1 A1B	
	(codes L1Q, K1Q)	1	⊟8054 A1Q	⊟8054 A1Q	---- ---	⊟8040-1 A1Q	

★ Indicates use as required.
⊟ Indicates parts not listed in any previous parts book.

Printed in U.S.A.
Prices and specifications subject to change without notice.
Right and left part numbers are on same line, first number is right, second number is left.
* Indicates change or addition.
MyMopar.com

CODE	REMARKS	PER CAR	SED.	4D H.T	STA. WGN.	2D H.T	CV. CP.
23-108-16	COVER, Front Seat Back						
	D2-L (Refer to Distribution Drawing Type "B")						
	(codes L1R, K1R)	1	8054 A1R	8054 A1R	---- ---	8040-1 A1R	
	(codes L1T, K1T)	1	8054 A1T	8054 A1T	---- ---	8040-1 A1T	
	(codes L1Y, K1Y)	1	8054 A1Y	8054 A1Y	---- ---	8040-1 A1Y	
	D2-L						
	(code L4B)	1	6000 A4B				
	(code L4R)	1	6000 A4R				
	(code L4T)	1	6000 A4T				
	(code L4X)	1	6000 A4X				
	(code L3B)	1	---- ---	8013 A3B			
	(code L3R)	1	---- ---	8013 A3R			
	(code L3T)	1	---- ---	8013 A3T			
	(code L3X)	1	---- ---	8013 A3X			
	(code L4B)	1	---- ---	---- ---	*6000 A4B		
	(code L4Q	1	---- ---	---- ---	*6000 A4Q		
	(code L4R)	1	---- ---	---- ---	*6000 A4R		
	(code L4T)	1	---- ---	---- ---	*6000 A4T		
	(code L4Y)	1	---- ---	---- ---	*6000 A4Y		
	(code L5B)	1	6032 A5B				
	(code L5R)	1	6032 A5R				
	(code L5T)	1	6032 A5T				
	(codes L2T, K2T)	1	7430 A2T				
	(codes L8T, K8T, T8T)	1	5985 A8T				
	(codes L2A, K2A)	1	7786 A2A				
	(codes L8A, K8A)	1	5985 A8A				
	(code L4B)	1	---- ---	---- ---	---- ---	7682-3 A4B	7682-3 A4B
	(code L4Q)	1	---- ---	---- ---	---- ---	---- ---	7682-3 A4Q
	(code L4R)	1	---- ---	---- ---	---- ---	7682-3 A4R	7682-3 A4R
	(code L4T)	1	---- ---	---- ---	---- ---	7682-3 A4T	7682-3 A4T
	(code L4Y)	1	---- ---	---- ---	---- ---	---- ---	7682-3 A4Y
	(code L4X)	1	---- ---	---- ---	---- ---	7682-3 A4X	
	(pattern grained vinyl)						
	(code L9B)	2	---- ---	---- ---	---- ---	7694 A9B	*7694 A9B
	(code L9R)	2	---- ---	---- ---	---- ---	7694 A9R	*7694 A9R
	(code L9X)	2	---- ---	---- ---	---- ---	7694 A9X	*7694 A9X
	(plain vinyl)						
	(code L9B)	2	---- ---	---- ---	---- ---	7694 A9B	
	(code L9R)	2	---- ---	---- ---	---- ---	7694 A9R	
	(code L9X)	2	---- ---	---- ---	---- ---	7694 A9X	
	D2-H						
	(code H1B)	1	7218 A1B				
	(code H1Q)	1	7218 A1Q				
	(code H1R)	1	7218 A1R				
	(code H1T)	1	7218 A1T				
	(code H1Y)	1	7218 A1Y				
	(code H4B)	1	6026-7 A4B	6026-7 A4B	6026-7 A4B	6026-7 A4B	6026-7 A4B
	(code H4Q)	1	---- ---	6026-7 A4Q	6026-7 A4Q	6026-7 A4Q	6026-7 A4Q
	(code H4R)	1	6026-7 A4R	6026-7 A4R	6026-7 A4R	6026-7 A4R	6026-7 A4R
	(code H4T)	1	6026-7 A4T	6026-7 A4T	6026-7 A4T	6026-7 A4T	6026-7 A4T
	(code H4X)	1	6026-7 A4X	6026-7 A4X	---- ---	6026-7 A4X	6026-7 A4X
	(code H4Y)	1	6026-7 A4Y	---- ---	6026-7 A4Y		

★ Indicates use as required.
⊟ Indicates parts not listed in any previous parts book.
Right and left part numbers are on same line, first number is right, second number is left.
• Indicates change or addition.

MyMopar.com

CODE	REMARKS	PER CAR	SED.	4D H.T	STA. WGN.	2D H.T	CV. CP.
23-108-16	COVER, Front Seat Back - Cont'd						
	D2-P						
	(code P1B)	1	---- ---	---- ---	---- ---	7266 A1B	
	(code P1Q)	1	---- ---	---- ---	---- ---	7266 A1Q	
	(code P4R)	1	---- ---	---- ---	---- ---	7274 A4R	
	(code P4T)	1	---- ---	---- ---	---- ---	7274 A4T	
	(code P4U)	1	---- ---	---- ---	---- ---	7274 A4U	
	(code P4X)	1	---- ---	---- ---	---- ---	7274 A4X	
	(code P4W)	1	---- ---	---- ---	---- ---	7274 A4W	
23-108-32	PANEL or INSERT, Back of Front Seat Back						
	W2-P						
	(code P4B)	2	---- ---	---- ---	---- ---	6133 A4B	6133 A4B
	(code P4Q)	2	---- ---	---- ---	---- ---	6133 A4Q	6133 A4Q
	(code P4R)	2	---- ---	---- ---	---- ---	6133 A4R	6133 A4R
	(code P4T)	2	---- ---	---- ---	---- ---	6133 A4T	6133 A4T
	(code P4X)	2	---- ---	---- ---	---- ---	6133 A4X	6133 A4X
	(code P4Y)	2	---- ---	---- ---	---- ---	6133 A4Y	6133 A4Y
	D2-L						
	(code L9B)	2	---- ---	---- ---	---- ---	7508 A9B	
	(code L9R)	2	---- ---	---- ---	---- ---	7508 A9R	
	(code L9X)	2	---- ---	---- ---	---- ---	7508 A9X	
	D2-P						
	(code P1B)	2	---- ---	---- ---	---- ---	7267 A1B	
	(code P1Q)	2	---- ---	---- ---	---- ---	7267 A1Q	
	(code P4R)	2	---- ---	---- ---	---- ---	7275 A4R	
	(code P4T)	2	---- ---	---- ---	---- ---	7275 A4T	
	(code P4U)	2	---- ---	---- ---	---- ---	7275 A4U	
	(code P4X)	2	---- ---	---- ---	---- ---	7275 A4X	
	(code P4W)	2	---- ---	---- ---	---- ---	7275 A4W	
23-108-57	NUT, Front Seat Cushion to Rear Rail Head						
	W1-L, W2-L	4	2094 869				
23-108-84	COVER, Front Seat Back Side Hinge						
	W1, W2 (paint as required)						
	Right	1	4338 VT6	---- ---	---- ---	4338 VT6	4338 VT6
	Left	1	*4337 AT6	---- ---	---- ---	*4337 AT6	*4337 AT6
	W2-P						
	(frame to back hinge post)	4	---- ---	---- ---	---- ---	4390 VT6	4390 VT6
	D2-L						
	(frame to back Hinge post)	4	---- ---	---- ---	---- ---	4390 VT6	4390 VT6
	Clip (attaching)	★	---- ---	---- ---	---- ---	6008 221	6008 221
23-108-98	SHIELD, Front Seat Side						
	W2-P, D2-L, D2-P						
	(back)	4	---- ---	---- ---	---- ---	2440 219	2440 219
	(cushion)	2	---- ---	---- ---	---- ---	2440 340	2440 340
	D2-H (side shield comp.)						
	(manual and power)						
	Right	1	2577 206	2577 206	2577 206		
	(manual) Left	1	2577 207	2577 207	2577 207		
	(power) Left	1	2577 209	2577 209	2577 209		
	D2-H (cushion)						
	(manual and power)						
	Right	1	---- ---	---- ---	---- ---	2577 202	2577 202
	(manual) Left	1	---- ---	---- ---	---- ---	2577 203	2577 203
	(power) Left	1	---- ---	---- ---	---- ---	2577 205	2577 205
	(back)	1	---- ---	---- ---	---- ---	2577 198-9	2577 198-9

★ Indicates use as required.
⊟ Indicates parts not listed in any previous parts book.
April 1966, Supersedes May 1965.

Printed in U.S.A.
Prices and specifications subject to change without notice.
Right and left part numbers are on same line, first number is right, second number is left.
* Indicates change or addition.

MyMopar.com

CODE	REMARKS	PER CAR	SED.	4D H.T	STA. WGN.	2D H.T	CV. CP.
23-109-3	BACK, Rear Seat						
	W1-L, W2-L						
	(code L1B)	1	6586 A1B				
	(code L1Q)	1	6586 A1Q				
	(code L1R)	1	6586 A1R				
	(code L1T)	1	6586 A1T				
	(code L5B)	1	6598 A5B				
	(code L5R)	1	6598 A5R				
	(code L5T)	1	6598 A5T				
	(code L2T)	1	6566 A2T				
	(code L8T)	1	6568 A8T				
	W1-L, W2-L (w/heavy duty spring)						
	(codes L1B, K1B)	1	6587 A1B				
	(codes L1Q, K1Q)	1	6587 A1Q				
	(codes L1R, K1R)	1	6587 A1R				
	(codes L1T, K1T)	1	6587 A1T				
	(codes L2T, K2T)	1	6567 A2T				
	(codes L8T, K8T, T8T)	1	6569 A8T				
	W1-L, W2-L (2nd. seat) (spring and cover)						
	(codes L4B, K4B)	1	---- ---	---- ---	6592 A4B		
	(codes L4Q, K4Q)	1	---- ---	---- ---	6592 A4Q		
	(codes L4R, K4R)	1	---- ---	---- ---	6592 A4R		
	(codes L4T, K4T)	1	---- ---	---- ---	6592 A4T		
	W1-H, W2-H (2nd. seat)						
	(codes H1B, H4B)	1	6595 A1B	---- ---	6591 A4B	6597 A1B	6596 A4B
	(codes H1Q, H4Q)	1	6595 A1Q	---- ---	6591 A4Q	6597 A1Q	6596 A4Q
	(codes H1R, H4R)	1	6595 A1R	---- ---	6591 A4R	6597 A1R	6596 A4R
	(codes H1T, H4T)	1	6595 A1T	---- ---	6591 A4T	6597 A1T	6596 A4T
	(code H5B)	1	6598 A5B				
	(code H5R)	1	6598 A5R				
	(code H5T)	1	6598 A5T				
	W2-H (3rd. seat)						
	(code H4B)	1	---- ---	---- ---	7054 A4B		
	(code H4Q)	1	---- ---	---- ---	7054 A4Q		
	(code H4R)	1	---- ---	---- ---	7054 A4R		
	(code H4T)	1	---- ---	---- ---	7054 A4T		
	W2-P						
	(code P4B)	1	---- ---	---- ---	---- ---	6604 A4B	6599 A4B
	(code P4Q)	1	---- ---	---- ---	---- ---	6604 A4Q	6599 A4Q
	(code P4R)	1	---- ---	---- ---	---- ---	6604 A4R	6599 A4R
	(code P4T)	1	---- ---	---- ---	---- ---	6604 A4T	6599 A4T
	(code P4X)	1	---- ---	---- ---	---- ---	6604 A4X	6599 A4X
	(code P4Y)	1	---- ---	---- ---	---- ---	6604 A4Y	6599 A4Y
	Screw and Washer	2	*6023 545	---- ---	*6023 545	*6023 545	*6023 545
	D2-L (Refer to Distribution Drawing Type "A")						
	(codes L1B, K1B, L6B)	1	*6588 A1B	*6607 A1B	---- ---	*6590 A1B	
	(codes L1Q, K1Q, L6Q)	1	*6588 A1Q	*6607 A1Q	---- ---	*6590 A1Q	
	(codes L1R, K1R, L6R)	1	*6588 A1R	*6607 A1R	---- ---	*6590 A1R	
	(codes L1T, K1T, L6T)	1	*6588 A1T	*6607 A1T	---- ---	*6590 A1T	
	(codes L1Y, K1Y)	1	*6588 A1Y	*6607 A1Y	---- ---	*6590 A1Y	
	(codes L2A, K2A)	1	⊟7467 A2A				
	(w/heavy duty springs)						
	(codes L1B, K1B, L6B)	1	*6589 A1B				
	(codes L1Q, K1Q, L6Q)	1	*6589 A1Q				
	(codes L1R, K1R, L6R)	1	*6589 A1R				
	(codes L1T, K1T, L6T)	1	*6589 A1T				
	(codes L1Y, K1Y)	1	*6589 A1Y				
	(codes L2A, K2A)	1	⊟7468 A2A				

★ Indicates use as required.
⊟ Indicates parts not listed in any previous parts book.
May 1965.

Printed in U.S.A.
Prices and specifications subject to change without notice.
Right and left part numbers are on same line, first number is right, second number is left.
* Indicates change or addition.

MyMopar.com

CODE	REMARKS	PER CAR	SED.	4D H.T	STA. WGN.	2D H.T	CV. CP.
23-109-3	BACK, Rear Seat - Cont'd						
	D2-L (Refer to Distribution Drawing Type "B")						
	(codes L1B, K1B)	1	8060 A1B	8066 A1B	---- ---	8044 A1B	
	(codes L1Q, K1Q)	1	8060 A1Q	8066 A1Q	---- ---	8044 A1Q	
	(codes L1R, K1R)	1	8060 A1R	8066 A1R	---- ---	8044 A1R	
	(codes L1T, K1T)	1	8060 A1T	8066 A1T	---- ---	8044 A1T	
	(codes L1Y, K1Y)	1	8060 A1Y	8066 A1Y	---- ---	8044 A1Y	
	(w/heavy duty springs)						
	(codes L1B, K1B)	1	8061 A1B				
	(codes L1Q, K1Q)	1	8061 A1Q				
	(codes L1R, K1R)	1	8061 A1R				
	(codes L1T, K1T)	1	8061 A1T				
	(codes L1Y, K1Y)	1	8061 A1Y				
	D2-L						
	(code L3B)	1	---- ---	8018 A3B			
	(code L3R)	1	---- ---	8018 A3R			
	(code L3T)	1	---- ---	8018 A3T			
	(code L3X)	1	---- ---	8018 A3X			
	(code L2T)	1	7467 A2T				
	(code L8T)	1	7417 A8T				
	(code L5B)	1	6593 A5B				
	(code L5R)	1	6593 A5R				
	(code L5T)	1	6593 A5T				
	(code L9B)	1	---- ---	---- ---	---- ---	7513 A9B	
	(code L9R)	1	---- ---	---- ---	---- ---	7513 A9R	
	(code L9X)	1	---- ---	---- ---	---- ---	7513 A9X	
	D2-L (w/heavy duty spring)						
	(code L5B)	1	6594 A5B				
	(code L5R)	1	6594 A5R				
	(code L5T)	1	6594 A5T				
	(codes L2T, K2T)	1	7468 A2T				
	(codes L8T, K8T)	1	7418 A8T				
	(code L4B)	1	7796 A4B				
	(code L4R)	1	7796 A4R				
	(code L4T)	1	7796 A4T				
	(code L4X)	1	7796 A4X				
	(code L3B)	1	---- ---	8018 A3B			
	(code L3R)	1	---- ---	8018 A3R			
	(code L3T)	1	---- ---	8018 A3T			
	(code L3X)	1	---- ---	8018 A3X			
	D1-L, D2-L (spring and cover)						
	(code L4B) (2nd. seat)	1	---- ---	---- ---	6578 A4B		
	(3rd. seat)	1	---- ---	---- ---	7037 A4B		
	(code L4Q) (2nd. seat)	1	---- ---	---- ---	6578 A4Q		
	(3rd. seat)	1	---- ---	---- ---	7037 A4Q		
	(code L4R) (2nd. seat)	1	---- ---	---- ---	6578 A4R		
	(3rd. seat)	1	---- ---	---- ---	7037 A4R		
	(code L4T) (2nd. seat)	1	---- ---	---- ---	6578 A4T		
	(3rd. seat)	1	---- ---	---- ---	7037 A4T		
	(code L4Y) (2nd. seat)	1	---- ---	---- ---	6578 A4Y		
	(3rd. seat)	1	---- ---	---- ---	7037 A4Y		
	D2-L (plain vinyl)						
	(code L4B)	1	---- ---	---- ---	---- ---	7698 A9B	7640 A4B
	(code L4Q)	1	---- ---	---- ---	---- ---	---- ---	*7640 A4Q
	(code L4R)	1	---- ---	---- ---	---- ---	7698 A9R	7640 A4R
	(code L4T)	1	---- ---	---- ---	---- ---	7698 A4T	7640 A4T
	(code L4Y)	1	---- ---	---- ---	---- ---	---- ---	7640 A4Y
	(code L4X)	1	---- ---	---- ---	---- ---	7698 A9X	

★ Indicates use as required.
⊟ Indicates parts not listed in any previous parts book.
April 1966, Supersedes May 1965.

Printed in U.S.A.
Prices and specifications subject to change without notice.
Right and left part numbers are on same line, first number is right, second number is left.
* Indicates change or addition.

MyMopar.com

CODE	REMARKS	PER CAR	SED.	4D H.T	STA. WGN.	2D H.T	CV. CP.
23-109-3	BACK, Rear Seat - Cont'd						
	D2-L						
	(pattern grained vinyl)						
	(code L9B)	1	---- ---	---- ---	---- ---	*7513 A9B	
	(code L9R)	1	---- ---	---- ---	---- ---	*7513 A9R	
	(code L9X)	1	---- ---	---- ---	---- ---	*7513 A9X	
	(plain vinyl)						
	(code L9B)	1	---- ---	---- ---	---- ---	⊟7698 A9B	
	(code L9R)	1	---- ---	---- ---	---- ---	⊟7698 A9R	
	(code L9X)	1	---- ---	---- ---	---- ---	⊟7698 A9X	
	D2-H (6 window sedan)						
	(code H4B)	1	6624 A4B				
	(code H4R)	1	6624 A4R				
	(code H4T)	1	6624 A4T				
	D2-H (2nd. seat)						
	(spring and cover)						
	(code H4B)	1	---- ---	---- ---	6630 A4B	---- ---	6582 A4B
	(code H4Q)	1	---- ---	---- ---	6630 A4Q	---- ---	6582 A4Q
	(code H4R)	1	---- ---	---- ---	6630 A4R	---- ---	6582 A4R
	(code H4T)	1	---- ---	---- ---	6630 A4T	---- ---	6582 A4T
	(code H4Y)	1	---- ---	---- ---	6630 A4Y		
	(code H4X)	1	---- ---	---- ---	---- ---	---- ---	6582 A4X
	D2-H (3rd. seat)						
	(spring and cover)						
	(code H4B)	1	---- ---	---- ---	7035 A4B		
	(code H4Q)	1	---- ---	---- ---	7035 A4Q		
	(code H4R)	1	---- ---	---- ---	7035 A4R		
	(code H4T)	1	---- ---	---- ---	7035 A4T		
	(code H4Y)	1	---- ---	---- ---	7035 A4Y		
	Screw w/Washer (spring attaching)	4	*6023 545	*6023 545	*6025 292	*6023 545	
	D2-H						
	(codes H1B, H4B)	1	7222 A1B	6621 A4B	---- ---	6622 A4B	6622 A4B
	(codes H1Q, H4Q)	1	7222 A1Q	6621 A4Q	---- ---	6622 A4Q	6622 A4Q
	(codes H1R, H4R)	1	7222 A1R	6621 A4R	---- ---	6622 A4R	6622 A4R
	(codes H1T, H4T)	1	7222 A1T	6621 A4T	---- ---	6622 A4T	6622 A4T
	(code H1Y)	1	7222 A1Y				
	(code H4X)	1	---- ---	6621 A4X	---- ---	6622 A4X	6622 A4X
	D2-P						
	(code P1B)	1	---- ---	---- ---	---- ---	6697 A1B	
	(code P1Q)	1	---- ---	---- ---	---- ---	6697 A1Q	
	(code P4R)	1	---- ---	---- ---	---- ---	6698 A4R	
	(code P4T)	1	---- ---	---- ---	---- ---	6698 A4T	
	(code P4U)	1	---- ---	---- ---	---- ---	6698 A4U	
	(code P4X)	1	---- ---	---- ---	---- ---	6698 A4X	
23-109-4	COVER, Rear Seat Back						
	W1-L, W2-L (2nd. seat)						
	(codes L1B, K1B, L4B, K4B)	1	*6781 A1B	---- ---	⊟6785 A4B		
	(codes L1Q, K1Q, L4Q, K4Q)	1	*6781 A1Q	---- ---	⊟6785 A4Q		
	(codes L1R, K1R, L4R, K4R)	1	*6781 A1R	---- ---	⊟6785 A4R		
	(codes L1T, K1T, L4T, K4T)	1	*6781 A1T	---- ---	⊟6785 A4T		
	(code L5B)	1	6790 AB4				
	(code L5R)	1	6790 AR5				
	(code L5T)	1	6790 AT6				
	(codes L2T, K2T)	1	6764 A2T				
	(codes L8T, K8T, T8T)	1	6765 A8T				
	W1-H, W2-H (2nd. seat)						
	(codes H1B, H4B)	1	*6787 A1B	---- ---	⊟6784 A4B	*6789 A1B	*6788 A4B
	(codes H1Q, H4Q)	1	6787 A1Q	---- ---	⊟6784 A4Q	6789 A1Q	6788 A4Q

★ Indicates use as required.
⊟ Indicates parts not listed in any previous parts book.
Right and left part numbers are on same line, first number is right, second number is left.
• Indicates change or addition.

MyMopar.com

CODE	REMARKS	PER CAR	SED.	4D H.T	STA. WGN.	2D H.T	CV. CP.
23-109-4	COVER, Rear Seat Back - Cont'd						
	W1-H, W2-H (2nd. seat)						
	(codes H1R, H4R)	1	6787 A1R	---- ---	⊟6784 A4R	6789 A1R	6788 A4R
	(codes H1T, H4T)	1	6787 A1T	---- ---	⊟6784 A4T	6789 A1T	6788 A4T
	(code H5B)	1	6790 AB4				
	(code H5R)	1	6790 AR5				
	(code H5T)	1	6790 AT6				
	W2-H (3rd. seat)						
	(code H4B)	1	---- ---	---- ---	⊟7053 A4B		
	(code H4Q)	1	---- ---	---- ---	⊟7053 A4Q		
	(code H4R)	1	---- ---	---- ---	⊟7053 A4R		
	(code H4T)	1	---- ---	---- ---	⊟7053 A4T		
	W2-P						
	(code P4B)	1	---- ---	---- ---	---- ---	6794 A4B	6793 A4B
	(code P4Q)	1	---- ---	---- ---	---- ---	6794 A4Q	6793 A4Q
	(code P4R)	1	---- ---	---- ---	---- ---	6794 A4R	6793 A4R
	(code P4T)	1	---- ---	---- ---	---- ---	6794 A4T	6793 A4T
	(code P4X)	1	---- ---	---- ---	---- ---	6794 A4X	6793 A4X
	(code P4Y)	1	---- ---	---- ---	---- ---	6794 A4Y	6793 A4Y
	D2-L (Refer to Distribution Drawing Type "A")						
	(2nd. seat)						
	(codes L1B, K1B, L6B)	1	*6782 A1B	*6798 A1B	---- ---	*6783 A1B	
	(codes L1Q, K1Q, L6Q)	1	*6782 A1Q	*6798 A1Q	---- ---	*6783 A1Q	
	(codes L1R, K1R, L6R)	1	*6782 A1R	*6798 A1R	---- ---	*6783 A1R	
	(codes L1T, K1T, L6T)	1	*6782 A1T	*6798 A1T	---- ---	*6783 A1T	
	(codes L1Y, K1Y)	1	*6782 A1Y	*6798 A1Y	---- ---	*6783 A1Y	
	D2-L (Refer to Distribution Drawing Type "B")						
	(codes L1B, K1B)	1	⊟8062 A1B	⊟8067 A1B	---- ---	⊟8045 A1B	
	(codes L1Q, K1Q)	1	⊟8062 A1Q	⊟8067 A1Q	---- ---	⊟8045 A1Q	
	(codes L1R, K1R)	1	⊟8062 A1R	⊟8067 A1R	---- ---	⊟8045 A1R	
	(codes L1T, K1T)	1	⊟8062 A1T	⊟8067 A1T	---- ---	⊟8045 A1T	
	(codes L1Y, K1Y)	1	⊟8062 A1Y	⊟8067 A1Y	---- ---	⊟8045 A1Y	
	(code L4B)	1	---- ---	---- ---	*6773 A4B		
	(code L4Q)	1	---- ---	---- ---	*6773 A4Q		
	(code L4R)	1	---- ---	---- ---	*6773 A4R		
	(code L4T)	1	---- ---	---- ---	*6773 A4T		
	(code L4Y)	1	---- ---	---- ---	*6773 A4Y		
	(code L4B)	1	⊟7795 A4B				
	(code L4R)	1	⊟7795 A4R				
	(code L4T)	1	⊟7795 A4T				
	(code L4X)	1	⊟7795 A4X				
	(code L3B)	1	---- ---	⊟8017 A3B			
	(code L3R)	1	---- ---	⊟8017 A3R			
	(code L3T)	1	---- ---	⊟8017 A3T			
	(code L3X)	1	---- ---	⊟8017 A3X			
	(code L5B)	1	6786 A5B				
	(code L5R)	1	6786 A5R				
	(code L5T)	1	6786 A5T				
	(codes L2A, K2A)	1	*7469 A2A				
	(codes L8A, K8A)	1	*7419 A8A				
	D2-L (3rd. seat)						
	(code L4B)	1	---- ---	---- ---	7038 A4B		
	(code L4Q)	1	---- ---	---- ---	7038 A4Q		
	(code L4R)	1	---- ---	---- ---	7038 A4R		
	(code L4T)	1	---- ---	---- ---	7038 A4T		
	(code L4Y)	1	---- ---	---- ---	7038 A4Y		

★ Indicates use as required.
⊟ Indicates parts not listed in any previous parts book.
May 1965.

Printed in U.S.A.
Prices and specifications subject to change without notice.
Right and left part numbers are on same line, first number is right, second number is left.
* Indicates change or addition.

MyMopar.com

CODE	REMARKS	PER CAR	SED.	4D H.T	STA. WGN.	2D H.T	CV. CP.
23-109-4	COVER, Rear Seat Back - Cont'd						
	D2-L (3rd. Seat)						
	(plain vinyl)						
	(code L4B)	1	---- ---	---- ---	---- ---	7699 A9B	7641 A4B
	(code L4Q)	1	---- ---	---- ---	---- ---	---- ---	7641 A4Q
	(code L4R)	1	---- ---	---- ---	---- ---	7699 A9R	7641 A4R
	(code L4T)	1	---- ---	---- ---	---- ---	7699 A4T	7641 A4T
	(code L4Y)	1	---- ---	---- ---	---- ---	---- ---	7641 A4Y
	(code L4X)	1	---- ---	---- ---	---- ---	7699 A9X	
	(code L9B)	1	---- ---	---- ---	---- ---	7699 A9B	*7641 A4B
	(code L9R)	1	---- ---	---- ---	---- ---	7699 A9R	*7641 A4R
	(code L9X)	1	---- ---	---- ---	---- ---	7699 A9X	*7641 A9X
	D2-H (2nd. seat)						
	(codes H1B, H4B)	1	7223 A1B	6810 A4B	6816 A4B	6811 A4B	
	(codes H1Q, H4Q)	1	7223 A1Q	6810 A4Q	6816 A4Q	6811 A4Q	
	(codes H1R, H4R)	1	7223 A1R	6810 A4R	6816 A4R	6811 A4R	
	(codes H1T, H4T)	1	7223 A1T	6810 A4T	6816 A4T	6811 A4T	
	(codes H1Y, H4Y)	1	7223 A1Y	---- ---	6816 A4Y	---- ---	
	(code H4X)	1	---- ---	6810 A4X	---- ---	6811 A4X	
	D2-H (3rd. seat)						
	(code H4B)	1	---- ---	---- ---	7036 A4B		
	(code H4Q)	1	---- ---	---- ---	7036 A4Q		
	(code H4R)	1	---- ---	---- ---	7036 A4R		
	(code H4T)	1	---- ---	---- ---	7036 A4T		
	(code H4Y)	1	---- ---	---- ---	7036 A4Y		
	D2-P						
	(code P1B)	1	---- ---	---- ---	---- ---	6817 A1B	
	(code P1Q)	1	---- ---	---- ---	---- ---	6817 A1Q	
	(code P4R)	1	---- ---	---- ---	---- ---	6818 A4R	
	(code P4T)	1	---- ---	---- ---	---- ---	6818 A4T	
	(code P4U)	1	---- ---	---- ---	---- ---	6818 A4U	
	(code P4X)	1	---- ---	---- ---	---- ---	6818 A4X	
	(code P4W)	1	---- ---	---- ---	---- ---	6818 A4W	
23-109-5	INSERT or COVER, Rear Seat Back Rear Panel W1, W2						
	(codes L4B, K4B, H4B)	1	---- ---	---- ---	1804 AB8		
	(codes L4Q, K4Q, H4Q)	1	---- ---	---- ---	1804 AQ8		
	(codes L4R, K4R, H4R)	1	---- ---	---- ---	1804 AR7		
	(codes L4T, K4T, H4T)	1	---- ---	---- ---	1804 AT8		
	Screw and Washer (attaching)	4	---- ---	---- ---	*6024 678		
	W1, W2 (3rd. seat back panel)						
	(code H4B)	1	---- ---	---- ---	1805 AB8		
	(code H4Q)	1	---- ---	---- ---	1805 AQ8		
	(code H4R)	1	---- ---	---- ---	1805 AR7		
	(code H4T)	1	---- ---	---- ---	1805 AT8		
	(code H4Y)	1	---- ---	---- ---	1805 AY8		
	Screw (attaching)	4	---- ---	---- ---	6024 678		
	W1, W2 (3rd. seat back support panel)						
	(code H4B)	1	---- ---	---- ---	1806 AB8		
	(code H4Q)	1	---- ---	---- ---	1806 AQ8		
	(code H4R)	1	---- ---	---- ---	1806 AR7		
	(code H4T)	1	---- ---	---- ---	1806 AT8		
	(code H4Y)	1	---- ---	---- ---	1806 AY8		
	Screw (attaching)	4	---- ---	---- ---	6024 678		

★ Indicates use as required.
Ⓑ Indicates parts not listed in any previous parts book.
Right and left part numbers are on same line, first number is right, second number is left.
* Indicates change or addition.

MyMopar.com

CODE	REMARKS	PER CAR	SED.	4D H.T	STA. WGN.	2D H.T	CV. CP.
23-109-5	INSERT or COVER Rear Seat Back, Rear Panel - Cont'd						
	D1, D2 (2nd. seat back panel)						
	(codes L4B, H4B)	1	---- ---	---- ---	1816 AB8		
	(codes L4Q, H4Q)	1	---- ---	---- ---	1816 AQ8		
	(codes L4R, H4R)	1	---- ---	---- ---	1816 AR7		
	(codes L4T, H4T)	1	---- ---	---- ---	1816 AT8		
	(codes L4Y, H4Y)	1	---- ---	---- ---	1816 AY8		
	D2 (2nd. seat support panel insert) (12 3/8" wide) (vinoleum)						
	(codes L4B, H4B)	1	---- ---	---- ---	1821 AB8		
	(codes L4Q, H4Q)	1	---- ---	---- ---	1821 AQ8		
	(codes L4R, H4R)	1	---- ---	---- ---	1821 AR7		
	(codes L4T, H4T)	1	---- ---	---- ---	1821 AT8		
	(codes L4Y, H4Y)	1	---- ---	---- ---	1821 AY8		
	D2 (2nd. seat back support insert) (5" wide) (vinoleum)						
	(codes L4B, H4B)	1	---- ---	---- ---	1825 AB8		
	(codes L4Q, H4Q)	1	---- ---	---- ---	1825 AQ8		
	(codes L4R, H4R)	1	---- ---	---- ---	1825 AR7		
	(codes L4T, H4T)	1	---- ---	---- ---	1825 AT8		
	(codes L4Y, H4Y)	1	---- ---	---- ---	1825 AY8		
	D2-L, D2-H (3rd. seat back panel)						
	(codes L4B, H4B)	1	---- ---	---- ---	1815 AB8		
	(codes L4Q, H4Q)	1	---- ---	---- ---	1815 AQ8		
	(codes L4R, H4R)	1	---- ---	---- ---	*1815 AR7		
	(codes L4T, H4T)	1	---- ---	---- ---	*1815 AT8		
	(codes L4Y, H4Y)	1	---- ---	---- ---	1815 AY8		
	(3rd. seat back support panel)						
	(codes L4B, H4B)	1	---- ---	---- ---	1822 AB8		
	(codes L4Q, H4Q)	1	---- ---	---- ---	1822 AQ8		
	(codes L4R, H4R)	1	---- ---	---- ---	1822 AR7		
	(codes L4T, H4T)	1	---- ---	---- ---	1822 AT8		
	(codes L4Y, H4Y)	1	---- ---	---- ---	1822 AY8		
	Screw (attaching)	4	---- ---	---- ---	6024 678		
23-109-6	FOUNDATION, Back of Rear Seat Back Upper						
	W1, W2 (paint as required)	1	---- ---	---- ---	---- ---	---- ---	4364 AX9
	D2	1	---- ---	---- ---	---- ---	---- ---	4472 AX9
	(less radio speaker)	1	---- ---	---- ---	---- ---	---- ---	4473 AX9
23-109-10	FILLER and BRACKET, Rear Seat Back Cushion						
	D2-P (paint as required)	1	---- ---	---- ---	---- ---	4462-3 AX9	
	Screw (filler bracket to floor)	6	---- ---	---- ---	---- ---	6023 776	
	Screw and Washer	2	---- ---	---- ---	---- ---	6025 583	
23-109-11	SHROUD, Rear Seat Back						
	D2-P (w/medallion) (paint as required)	1	---- ---	---- ---	---- ---	*4492 AX9	
	(w/o medallion)	1	---- ---	---- ---	---- ---	*4354 AX9	
	Fastener (bracket to body)	4	---- ---	---- ---	---- ---	6000 365	
23-109-12	EXTENSION, Rear Seat Shroud Side Filler						
	D2-P (paint as required)	1	---- ---	---- ---	---- ---	4484-5 AX9	
	Screw and Washer	3	---- ---	---- ---	---- ---	*6025 583	
23-109-35	CUSHION, Rear Seat						
	W1, W2 (2nd. seat sta. wgn.)						
	(codes L1B, L4B, K4B)	1	6289 A1B	---- ---	6293 A4B		
	(codes L1Q, L4Q, K4Q)	1	6289 A1Q	---- ---	6293 A4Q		

★ Indicates use as required.
B Indicates parts not listed in any previous parts book.
April 1966, Supersedes May 1965.

Printed in U.S.A.
Prices and specifications subject to change without notice.
Right and left part numbers are on same line, first number is right, second number is left.
* Indicates change or addition.

MyMopar.com

CODE	REMARKS	PER CAR	SED.	4D H.T	STA. WGN.	2D H.T	CV. CP.
23-109-35	CUSHION, Rear Seat - Cont'd						
	W1, W2 (2nd. seat sta. wgn.)						
	(codes L1R, L4R, K4R)	1	6289 A1R	---- ---	6293 A4R		
	(codes L1T, L4T, K4T)	1	6289 A1T	---- ---	6293 A4T		
	(code L2T)	1	6280 A2T				
	(code L8T)	1	6284 A8T				
	W1, W2 (w/heavy duty spring)						
	(codes L1B, K1B)	1	⊟6291 A1B				
	(codes L1Q, K1Q)	1	⊟6291 A1Q				
	(codes L1R, K1R)	1	⊟6291 A1R				
	(codes L1T, K1T)	1	⊟6291 A1T				
	(codes L2T, K2T)	1	*6282 A2T				
	(codes L8T, K8T, T8T)	1	6286 A8T				
	W1, W2						
	(codes L5B, H5B)	1	6298 A5B				
	(codes L5R, H5R)	1	6298 A5R				
	(codes L5T, H5T)	1	6298 A5T				
	W1, W2 (2nd. seat)						
	(codes H1B, H4B)	1	6300 A1B	---- ---	6294 A4B	6304 A1B	6302 A4B
	(codes H1Q, H4Q)	1	6300 A1Q	---- ---	6294 A4Q	6304 A1Q	6302 A4Q
	(codes H1R, H4R)	1	6300 A1R	---- ---	6294 A4R	6304 A1R	6302 A4R
	(codes H1T, H4T)	1	6300 A1T	---- ---	6294 A4T	6304 A1T	6302 A4T
	W2-P						
	(code P4B)	1	---- ---	---- ---	---- ---	6317 A4B	6316 A4B
	(code P4Q)	1	---- ---	---- ---	---- ---	6317 A4Q	6316 A4Q
	(code P4R)	1	---- ---	---- ---	---- ---	6317 A4R	6316 A4R
	(code P4T)	1	---- ---	---- ---	---- ---	6317 A4T	6316 A4T
	(code P4X)	1	---- ---	---- ---	---- ---	6317 A4X	6316 A4X
	(code P4Y)	1	---- ---	---- ---	---- ---	6317 A4Y	6316 A4Y
	D2-L (Refer to Distribution Drawing Type "A")						
	(codes L1B, K1B)	1	*6246 A1B	*6340 A1B	---- ---	⊟6295 A1B	
	(codes L1Q, K1Q)	1	*6246 A1Q	*6340 A1Q	---- ---	⊟6295 A1Q	
	(codes L1R, K1R)	1	*6246 A1R	*6340 A1R	---- ---	⊟6295 A1R	
	(codes L1T, K1T)	1	*6246 A1T	*6340 A1T	---- ---	⊟6295 A1T	
	(codes L1Y, K1Y)	1	*6246 A1Y	*6340 A1Y	---- ---	⊟6295 A1Y	
	(w/airfoam pad)						
	(code L1B)	1	6247 A1B	6341 A1B	---- ---	6296 A1B	
	(code L1Q)	1	6247 A1Q	6341 A1Q	---- ---	6296 A1Q	
	(code L1R)	1	6247 A1R	6341 A1R	---- ---	6296 A1R	
	(code L1T)	1	6247 A1T	6341 A1T	---- ---	6296 A1T	
	(code L1Y)	1	6247 A1Y	6341 A1Y	---- ---	6296 A1Y	
	(w/heavy duty spring)						
	(codes L1B, K1B)	1	6248 A1B				
	(codes L1Q, K1Q)	1	6248 A1Q				
	(codes L1R, K1R)	1	6248 A1R				
	(codes L1T, K1T)	1	6248 A1T				
	(codes L1Y, K1Y)	1	6248 A1Y				
	(w/heavy duty spring and airfoam pad)						
	(codes L1B, K1B)	1	6249 A1B				
	(codes K1Q, K1Q)	1	6249 A1Q				
	(codes L1R, K1R)	1	6249 A1R				
	(codes L1T, K1T)	1	6249 A1T				
	(codes L1Y, K1Y)	1	6249 A1Y				
	W2-H (3rd. seat)						
	(code H4B)	1	---- ---	---- ---	⊟7052 A4B		
	(code H4Q)	1	---- ---	---- ---	⊟7052 A4Q		
	(code H4R)	1	---- ---	---- ---	⊟7052 A4R		
	(code H4T)	1	---- ---	---- ---	⊟7052 A4T		

★ Indicates use as required.
⊟ Indicates parts not listed in any previous parts book.
Right and left part numbers are on same line, first number is right, second number is left.
* Indicates change or addition.

Printed in U.S.A.
Prices and specifications subject to change without notice.
May 1965.

MyMopar.com

CODE	REMARKS	PER CAR	SED.	4D H.T	STA. WGN.	2D H.T	CV. CP.
23-109-35	CUSHION, Rear Seat - Cont'd						
	D2-L (Refer to Distribution Drawing Type "B")						
	(codes L1B, K1B)	1	⊟8055 A1B	⊟8063 A1B	---- ---	⊟8037 A1B	
	(codes L1Q, K1Q)	1	⊟8055 A1Q	⊟8063 A1Q	---- ---	⊟8037 A1Q	
	(codes L1R, K1R)	1	⊟8055 A1R	⊟8063 A1R	---- ---	⊟8037 A1R	
	(codes L1T, K1T)	1	⊟8055 A1T	⊟8063 A1T	---- ---	⊟8037 A1T	
	(codes L1Y, K1Y)	1	⊟8055 A1Y	⊟8063 A1Y	---- ---	⊟8037 A1Y	
	(w/airfoam pad)						
	(codes L1B, K1B)	1	⊟8056 A1B	⊟8064 A1B	---- ---	⊟8042 A1B	
	(codes L1Q, K1Q)	1	⊟8056 A1Q	⊟8064 A1Q	---- ---	⊟8042 A1Q	
	(codes L1R, K1R)	1	⊟8056 A1R	⊟8064 A1R	---- ---	⊟8042 A1R	
	(codes L1T, K1T)	1	⊟8056 A1T	⊟8064 A1T	---- ---	⊟8042 A1T	
	(codes L1Y, K1Y)	1	⊟8056 A1Y	⊟8064 A1Y	---- ---	⊟8042 A1Y	
	(w/heavy duty springs)						
	(codes L1B, K1B)	1	⊟8057 A1B				
	(codes L1Q, K1Q)	1	⊟8057 A1Q				
	(codes L1R, K1R)	1	⊟8057 A1R				
	(codes L1T, K1T)	1	⊟8057 A1T				
	(codes L1Y, K1Y)	1	⊟8057 A1Y				
	(codes L2A, K2A)	1	⊟7472 A2A				
	(w/heavy duty springs and airfoam pad)						
	(codes L1B, K1B)	1	⊟8058 A1B				
	(codes L1Q, K1Q)	1	⊟8058 A1Q				
	(codes L1R, K1R)	1	⊟8058 A1R				
	(codes L1T, K1T)	1	⊟8058 A1T				
	(codes L1Y, K1Y)	1	⊟8058 A1Y				
	(codes L2A, K2A)	1	⊟7473 A2A				
	D2						
	(code L4B)	1	⊟7799 A4B				
	(code L4R)	1	⊟7799 A4R				
	(code L4T)	1	⊟7799 A4T				
	(code L4X)	1	⊟7799 A4X				
	(codes L2A, K2A)	1	⊟7470 A2A				
	(code L3B)	1	---- ---	⊟8015 A3B			
	(code L3R)	1	---- ---	⊟8015 A3R			
	(code L3T)	1	---- ---	⊟8015 A3T			
	(code L3X)	1	---- ---	⊟8015 A3X			
	(w/airfoam pad)						
	(code L4B)	1	⊟8000 A4B				
	(code L4R)	1	⊟8000 A4R				
	(code L4T)	1	⊟8000 A4T				
	(code L4X)	1	⊟8000 A4X				
	(codes L2A, K2A)	1	⊟7471 A2A				
	(code L3B)	1	---- ---	⊟8016 A3B			
	(code L3R)	1	---- ---	⊟8016 A3R			
	(code L3T)	1	---- ---	⊟8016 A3T			
	(code L3X)	1	---- ---	⊟8016 A3X			
	(code L5B)	1	*6242 A5B				
	(code L5R)	1	*6242 A5R				
	(code L5T)	1	*6242 A5T				
	(w/heavy duty spring)						
	(code L5B)	1	6244 A5B				
	(code L5R)	1	6244 A5R				
	(code L5T)	1	6244 A5T				
	D2-L (w/heavy duty spring and airfoam pad)						
	(code L5B)	1	6245 A5B				
	(code L5R)	1	6245 A5R				
	(code L5T)	1	6245 A5T				

★ Indicates use as required.
⊟ Indicates parts not listed in any previous parts book.
May 1965.

Printed in U.S.A.
Prices and specifications subject to change without notice.
Right and left part numbers are on same line, first number is right, second number is left.
• Indicates change or addition.

MyMopar.com

CODE	REMARKS	PER CAR	SED.	4D H.T	STA. WGN.	2D H.T	CV. CP.
23-109-35	CUSHION, Rear Seat - Cont'd D2-L (w/heavy duty spring and airfoam pad)						
	(pattern grained vinyl)						
	(code L4B)	1	---- ---	---- ---	---- ---	---- ---	*6395 A4B
	(code L4Q)	1	---- ---	---- ---	---- ---	---- ---	*6395 A4Q
	(code L4R)	1	---- ---	---- ---	---- ---	---- ---	*6395 A4R
	(code L4T)	1	---- ---	---- ---	---- ---	---- ---	*6395 A4T
	(code L4Y)	1	---- ---	---- ---	---- ---	---- ---	*6395 A4Y
	(plain vinyl)						
	(code L4B, L9B)	1	---- ---	---- ---	---- ---	⊟7695 A9B	⊟7684 A4B
	(code L4Q)	1	---- ---	---- ---	---- ---	---- ---	⊟7684 A4Q
	(code L4R, L9R)	1	---- ---	---- ---	---- ---	⊟7695 A9R	⊟7684 A4R
	(code L4T)	1	---- ---	---- ---	---- ---	⊟7695 A4T	⊟7684 A4T
	(code L4Y)	1	---- ---	---- ---	---- ---	---- ---	⊟7684 A4Y
	(code L4X, L9X)	1	---- ---	---- ---	---- ---	⊟7695 A9X	⊟7684 A9X
	(pattern grained vinyl)						
	(code L9B)	1	---- ---	---- ---	---- ---	⊟7510 A9B	
	(code L9R)	1	---- ---	---- ---	---- ---	⊟7510 A9R	
	(code L9X)	1	---- ---	---- ---	---- ---	⊟7510 A9X	
	(plain vinyl)						
	(code L9B)	1	---- ---	---- ---	---- ---	⊟7695 A9B	
	(code L9R)	1	---- ---	---- ---	---- ---	⊟7695 A9R	
	(code L9X)	1	---- ---	---- ---	---- ---	⊟7695 A9X	
	(pattern grained vinyl) (w/airfoam pad)						
	(code L4B)	1	---- ---	---- ---	---- ---	---- ---	*6396 A4B
	(code L4Q)	1	---- ---	---- ---	---- ---	---- ---	*6396 A4Q
	(code L4R)	1	---- ---	---- ---	---- ---	---- ---	*6396 A4R
	(code L4T)	1	---- ---	---- ---	---- ---	---- ---	*6396 A4T
	(code L4Y)	1	---- ---	---- ---	---- ---	---- ---	*6396 A4Y
	(plain vinyl)						
	(codes L4B, L9B)	1	---- ---	---- ---	---- ---	⊟7696 A9B	⊟7685 A4B
	(code L4Q)	1	---- ---	---- ---	---- ---	---- ---	⊟7685 A4Q
	(codes L4R, L9R)	1	---- ---	---- ---	---- ---	⊟7696 A9R	⊟7685 A4R
	(code L4T)	1	---- ---	---- ---	---- ---	⊟7696 A4T	⊟7685 A4T
	(code L4Y)	1	---- ---	---- ---	---- ---	---- ---	⊟7685 A4Y
	(codes L4X, L9X)	1	---- ---	---- ---	---- ---	⊟7696 A9X	⊟7685 A9X
	(pattern grained vinyl)						
	(code L9B)	1	---- ---	---- ---	---- ---	⊟7511 A9B	
	(code L9R)	1	---- ---	---- ---	---- ---	⊟7511 A9R	
	(code L9X)	1	---- ---	---- ---	---- ---	⊟7511 A9X	
	(plain vinyl)						
	(code L9B)	1	---- ---	---- ---	---- ---	⊟7696 A9B	
	(code L9R)	1	---- ---	---- ---	---- ---	⊟7696 A9R	
	(code L9X)	1	---- ---	---- ---	---- ---	⊟7696 A9X	
	D2-L (2nd. seat) (w/Airfoam pad)						
	(code L4B)	1	---- ---	---- ---	*6338 A4B	---- ---	*6396 A4B
	(code L4Q)	1	---- ---	---- ---	*6338 A4Q	---- ---	*6396 A4Q
	(code L4R)	1	---- ---	---- ---	*6338 A4R	---- ---	*6396 A4R
	(code L4T)	1	---- ---	---- ---	*6338 A4T	---- ---	*6396 A4T
	(code L4Y)	1	---- ---	---- ---	*6338 A4Y	---- ---	*6396 A4Y
	D2-L (3rd. seat)						
	(code L4B)	1	---- ---	---- ---	⊟7024 A4B		
	(code L4Q)	1	---- ---	---- ---	⊟7024 A4Q		
	(code L4R)	1	---- ---	---- ---	⊟7024 A4R		
	(code L4T)	1	---- ---	---- ---	⊟7024 A4T		
	(code L4Y)	1	---- ---	---- ---	⊟7024 A4Y		

★ Indicates use as required.
⊟ Indicates parts not listed in any previous parts book.
Right and left part numbers are on same line, first number is right, second number is left.
• Indicates change or addition.

MyMopar.com

Printed in U.S.A.
Prices and specifications subject to change without notice.
May 1965.

CODE	REMARKS	PER CAR	SED.	4D H.T	STA. WGN.	2D H.T	CV. CP.
23-109-35	CUSHION, Rear Seat - Cont'd						
	D2-L						
	(w/heavy duty springs)						
	(code L4B)	1	⊟8001 A4B				
	(code L4R)	1	⊟8001 A4R				
	(code L4T)	1	⊟8001 A4T				
	(code L4X)	1	⊟8001 A4X				
	(w/heavy duty springs and airfoam pad)						
	(code L4B)	1	⊟8002 A4B				
	(code L4R)	1	⊟8002 A4R				
	(code L4T)	1	⊟8002 A4T				
	(code L4X)	1	⊟8002 A4X				
	D2-H						
	(code H4B)	1	---- ---	6324 A4B	---- ---	6377 A4B	6393 A4B
	(code H4Q)	1	---- ---	6324 A4Q	---- ---	6377 A4Q	6393 A4Q
	(code H4R)	1	---- ---	6324 A4R	---- ---	6377 A4R	6393 A4R
	(code H4T)	1	---- ---	6324 A4T	---- ---	6377 A4T	6393 A4T
	(code H4X)	1	---- ---	6324 A4X	---- ---	6377 A4X	6393 A4X
	D2-H (6 window sedan)						
	(w/airfoam pad)						
	(code H1B)	1	7220 A1B				
	(code H1Q)	1	7220 A1Q				
	(code H1R)	1	7220 A1R				
	(code H1T)	1	7220 A1T				
	(code H1Y)	1	7220 A1Y				
	(code H4B)	1	6332 A4B				
	(code H4R)	1	6332 A4R				
	(code H4T)	1	6332 A4T				
	D2-H (3rd. seat)						
	(code H4B)	1	---- ---	---- ---	7041 A4B		
	(code H4Q)	1	---- ---	---- ---	7041 A4Q		
	(code H4R)	1	---- ---	---- ---	7041 A4R		
	(code H4T)	1	---- ---	---- ---	7041 A4T		
	(code H4Y)	1	---- ---	---- ---	7041 A4Y		
	D2-H (2nd. seat)						
	(w/airfoam pad)						
	(code H4B)	1	---- ---	6325 A4B	6335 A4B	6378 A4B	6394 A4B
	(code H4Q)	1	---- ---	6325 A4Q	6335 A4Q	6378 A4Q	6394 A4Q
	(code H4R)	1	---- ---	6325 A4R	6335 A4R	6378 A4R	6394 A4R
	(code H4T)	1	---- ---	6325 A4T	6335 A4T	6378 A4T	6394 A4T
	(code H4X)	1	---- ---	6325 A4X	---- ---	6378 A4X	6394 A4X
	(code H4Y)	1	---- ---	---- ---	6335 A4Y		
	D2-P						
	(code P1B)	1	---- ---	---- ---	---- ---	6238 A1B	
	(code P1Q)	1	---- ---	---- ---	---- ---	6238 A1Q	
	(code P4R)	1	---- ---	---- ---	---- ---	6239 A4R	
	(code P4T)	1	---- ---	---- ---	---- ---	6239 A4T	
	(code P4U)	1	---- ---	---- ---	---- ---	6239 A4U	
	(code P4X)	1	---- ---	---- ---	---- ---	6239 A4X	
23-109-36	COVER, Rear Cushion						
	W1, W2 (2nd. seat)						
	(codes L1B, K1B, L4B, K4B)	1	6440 A1B	---- ---	6441 A4B		
	(codes L1Q, K1Q, L4Q, K4Q)	1	6440 A1Q	---- ---	6441 A4Q		
	(codes L1R, K1R, L4R, K4R)	1	6440 A1R	---- ---	6441 A4R		
	(codes L1T, K1T, L4T, K4T)	1	6440 A1T	---- ---	6441 A4T		
	(codes L2T, K2T)	1	6436 A2T				
	(codes L8T, K8T)	1	6437 A8T				

★ Indicates use as required.
⊟ Indicates parts not listed in any previous parts book.
May 1965.

Printed in U.S.A.
Prices and specifications subject to change without notice.
Right and left part numbers are on same line, first number is right, second number is left.
* Indicates change or addition.

MyMopar.com

CODE	REMARKS	PER CAR	SED.	4D H.T	STA. WGN.	2D H.T	CV. CP.
23-109-36	COVER, Rear Cushion - Cont'd						
	W1, W2 (2nd. seat)						
	(codes L5B, H5B)	1	6445 AB4				
	(codes L5R, H4R)	1	6445 AR5				
	(codes L5T, H5T)	1	6445 AT6				
	(codes H1B, H4B)	1	6446 A1B	---- ---	6442 A4B		
	(codes H1Q, H4Q)	1	6446 A1Q	---- ---	6442 A4Q		
	(codes H1R, H4R)	1	6446 A1R	---- ---	6442 A4R		
	(codes H1T, H4T)	1	6446 A1T	---- ---	6442 A4T		
	W1-H, W2-H (3rd. seat)						
	(codes H1B, H4B)	1	---- ---	---- ---	⊟7051 A4B	*6448 A1B	*6447 A4B
	(codes H1Q, H4Q)	1	---- ---	---- ---	⊟7051 A4Q	6448 A1Q	6447 A4Q
	(codes H1R, H4R)	1	---- ---	---- ---	⊟7051 A4R	6448 A1R	6447 A4R
	(codes H1T, H4T)	1	---- ---	---- ---	⊟7051 A4T	6448 A1T	6447 A4T
	W2-P						
	(code P4B)	1	---- ---	---- ---	---- ---	6453 A4B	6452 A4B
	(code P4Q)	1	---- ---	---- ---	---- ---	6453 A4Q	6452 A4Q
	(code P4R)	1	---- ---	---- ---	---- ---	6453 A4R	6452 A4R
	(code P4T)	1	---- ---	---- ---	---- ---	6453 A4T	6452 A4T
	(code P4X)	1	---- ---	---- ---	---- ---	6453 A4X	6452 A4X
	(code P4Y)	1	---- ---	---- ---	---- ---	6453 A4Y	6452 A4Y
	D2-L (Refer to Distribution Drawing Type "A")						
	(codes L1B, K1B, L6B)	1	*6439 A1B	⊟6488 A1B	---- ---	*6444 A1B	
	(codes L1Q, K1Q, L6Q)	1	*6439 A1Q	⊟6488 A1Q	---- ---	*6444 A1Q	
	(codes L1R, K1R, L6R)	1	*6439 A1R	⊟6488 A1R	---- ---	*6444 A1R	
	(codes L1T, K1T, L6T)	1	*6439 A1T	⊟6488 A1T	---- ---	*6444 A1T	
	(codes L1Y, K1Y)	1	*6439 A1Y	⊟6488 A1Y	---- ---	*6444 A1Y	
	D2-L (Refer to Distribution Drawing Type "B")						
	(codes L1B, K1B)	1	⊟8059 A1B	⊟8065 A1B	---- ---	⊟8043 A1B	
	(codes L1Q, K1Q)	1	⊟8059 A1Q	⊟8065 A1Q	---- ---	⊟8043 A1Q	
	(codes L1R, K1R)	1	⊟8059 A1R	⊟8065 A1R	---- ---	⊟8043 A1R	
	(codes L1T, K1T)	1	⊟8059 A1T	⊟8065 A1T	---- ---	⊟8043 A1T	
	(codes L1Y, K1Y)	1	⊟8059 A1Y	⊟8065 A1Y	---- ---	⊟8043 A1Y	
	D2-L (2nd. seat)						
	(code L4B)	1	---- ---	---- ---	*7033 A4B		
	(code L4Q)	1	---- ---	---- ---	*7033 A4Q		
	(code L4R)	1	---- ---	---- ---	*7033 A4R		
	(code L4T)	1	---- ---	---- ---	*7033 A4T		
	(code L4Y)	1	---- ---	---- ---	*7033 A4Y		
	(codes L8A, K8A)	1	*7413 A8A				
	(code L5B)	1	6463 A5B				
	(code L5R)	1	6463 A5R				
	(code L5T)	1	6463 A5T				
	(codes L2A, K2A)	1	⊟7474 A2A				
	D2-L (3rd. seat)						
	(code L4B)	1	---- ---	---- ---	7025 A4B		
	(code L4Q)	1	---- ---	---- ---	7025 A4Q		
	(code L4R)	1	---- ---	---- ---	7025 A4R		
	(code L4T)	1	---- ---	---- ---	7025 A4T		
	(code L4Y)	1	---- ---	---- ---	7025 A4Y		
	(code L4B)	1	⊟7798 A4B				
	(code L4R)	1	⊟7798 A4R				
	(code L4T)	1	⊟7798 A4T				
	(code L4X)	1	⊟7798 A4X				
	(code L3B)	1	---- ---	⊟8014 A3B			
	(code L3R)	1	---- ---	⊟8014 A3R			

★ Indicates use as required.
⊟ Indicates parts not listed in any previous parts book.
Right and left part numbers are on same line, first number is right, second number is left.
• Indicates change or addition.

MyMopar.com

Printed in U.S.A.
Prices and specifications subject to change without notice.
May 1965.

CODE	REMARKS	PER CAR	SED.	4D H.T	STA. WGN.	2D H.T	CV. CP.
23-109-36	COVER, Rear Cushion - Cont'd						
	D2-L (3rd. seat)						
	(code L3T)	1	---- ---	⊟8014 A3T			
	(code L3X)	1	---- ---	⊟8014 A3X			
	(plain vinyl)						
	(code L4B)	1	---- ---	---- ---	---- ---	⊟7697 A9B	⊟7686 A4B
	(code L4Q)	1	---- ---	---- ---	---- ---	---- ---	⊟7686 A4Q
	(code L4R)	1	---- ---	---- ---	---- ---	⊟7697 A9R	⊟7686 A4R
	(code L4T)	1	---- ---	---- ---	---- ---	⊟7697 A4T	⊟7686 A4T
	(code L4Y)	1	---- ---	---- ---	---- ---	---- ---	⊟7686 A4Y
	(code L4X)	1	---- ---	---- ---	---- ---	⊟7697 A9X	
	(code L9B)	1	---- ---	---- ---	---- ---	⊟7697 A9B	
	(code L9R)	1	---- ---	---- ---	---- ---	⊟7697 A9R	
	(code L9X)	1	---- ---	---- ---	---- ---	⊟7697 A9X	
	D2-H (2nd. seat)						
	(codes H1B, H4B)	1	7221 A1B	6456 A4B	6462 A4B	7003 A4B	6460 A4B
	(codes H1Q, H4Q)	1	7221 A1Q	6456 A4Q	6462 A4Q	7003 A4Q	6460 A4Q
	(codes H1R, H4R)	1	7221 A1R	6456 A4R	6462 A4R	7003 A4R	6460 A4R
	(codes H1T, H4T)	1	7221 A1T	6456 A4T	6462 A4T	7003 A4T	6460 A4T
	(code H1Y)	1	7221 A1Y	---- ---	6462 A4Y		
	(code H4X)	1	---- ---	6456 A4X	---- ---	7003 A4X	6460 A4X
	D2-H (3rd. seat)						
	(code H4B)	1	---- ---	---- ---	⊟7042 A4B		
	(code H4Q)	1	---- ---	---- ---	⊟7042 A4Q		
	(code H4R)	1	---- ---	---- ---	⊟7042 A4R		
	(code H4T)	1	---- ---	---- ---	⊟7042 A4T		
	(code H4Y)	1	---- ---	---- ---	⊟7042 A4Y		
	D2-P						
	(code P1B)	1	---- ---	---- ---	---- ---	6458 A1B	
	(code P1Q)	1	---- ---	---- ---	---- ---	6458 A1Q	
	(code P4R)	1	---- ---	---- ---	---- ---	6459 A4R	
	(code P4T)	1	---- ---	---- ---	---- ---	6459 A4T	
	(code P4U)	1	---- ---	---- ---	---- ---	6459 A4U	
	(code P4X)	1	---- ---	---- ---	---- ---	6459 A4X	
	(code P4W)	1	---- ---	---- ---	---- ---	⊟6459 A4W	
23-109-38	RETAINER, Rear Floor Pan Third Seat Cushion						
	W2-H, D2 Front	2	---- ---	---- ---	*2577 071		
	Rear	2	---- ---	---- ---	*2482 956		
23-111-37	STRIP, Folding Top Tacking						
	W1, W2 (Nos. 1 and 2)	2	---- ---	---- ---	---- ---	---- ---	*2424 591
	Rear Bow Center	1	---- ---	---- ---	---- ---	---- ---	*2424 607
	Rear Bow End	2	---- ---	---- ---	---- ---	---- ---	*2481 374
	D2 (Nos. 1 and 2)	2	---- ---	---- ---	---- ---	---- ---	*2528 254
	No. 3	1	---- ---	---- ---	---- ---	---- ---	*2603 557
	Rear Bow	1	---- ---	---- ---	---- ---	---- ---	*2424 607
	Center	1	---- ---	---- ---	---- ---	---- ---	*2528 264
23-112-12	BOOT, Folding Top Dust						
	W1, W2						
	(codes H4B, P4B)	1	---- ---	---- ---	---- ---	---- ---	*1915 AB4
	(codes H4Q, P4Q)	1	---- ---	---- ---	---- ---	---- ---	1915 AQ4
	(code H4R)	1	---- ---	---- ---	---- ---	---- ---	1915 AR5
	(codes H4T, P4T)	1	---- ---	---- ---	---- ---	---- ---	⊟1915 AT6
	(code P4R)	1	---- ---	---- ---	---- ---	---- ---	⊟1915 AR7
	(code P4Y)	1	---- ---	---- ---	---- ---	---- ---	⊟1915 AW3
	(code P4X)	1	---- ---	---- ---	---- ---	---- ---	⊟1915 AX9
	Socket (to belt moulding)	8	---- ---	---- ---	---- ---	---- ---	* 141 998
	Eyelet	2	---- ---	---- ---	---- ---	---- ---	* 141 991

★ Indicates use as required.
⊟ Indicates parts not listed in any previous parts book.
May 1965.

Printed in U.S.A.
Prices and specifications subject to change without notice.
Right and left part numbers are on same line, first number is right, second number is left.
* Indicates change or addition.

MyMopar.com

CODE	REMARKS	PER CAR	SED.	4D H.T	STA. WGN.	2D H.T	CV. CP.
23-112-12	BOOT, Folding Top Dust - Cont'd						
	D2						
	(codes L4B, H4B)	1	---- ---	---- ---	---- ---	---- ---	1939 AB4
	(codes L4Q, H4Q)	1	---- ---	---- ---	---- ---	---- ---	1939 AQ4
	(codes L4R, H4R)	1	---- ---	---- ---	---- ---	---- ---	1939 AR7
	(code L4Y)	1	---- ---	---- ---	---- ---	---- ---	1939 AY3
	(code H4X)	1	---- ---	---- ---	---- ---	---- ---	1939 AX9
	Fastener	4	---- ---	---- ---	---- ---	---- ---	6000 432
	(L4T)	1	---- ---	---- ---	---- ---	---- ---	*1939 AT6
23-112-18	RETAINER, Rear Seat Back Dust Boot						
	W1, W2	1	---- ---	---- ---	---- ---	---- ---	2577 276
	D2	1	---- ---	---- ---	---- ---	---- ---	*2577 277
23-112-21	FASTENER and PLATE, Folding Top Dust Boot to Belt Moulding						
	W2	23	---- ---	---- ---	---- ---	---- ---	2572 131
	EYELET, Folding Top Boot to Belt Moulding						
	W2	23	---- ---	---- ---	---- ---	---- ---	2581 193
23-112-45	CURTAIN, Folding Top Rear						
	W2						
	(blue)	1	---- ---	---- ---	---- ---	---- ---	1925 AB1
	(black)	1	---- ---	---- ---	---- ---	---- ---	1925 TX9
	(white)	1	---- ---	---- ---	---- ---	---- ---	1925 VW1
	(blue)	1	---- ---	---- ---	---- ---	---- ---	1926 AB1
	(black)	1	---- ---	---- ---	---- ---	---- ---	1926 TX9
	(white)	1	---- ---	---- ---	---- ---	---- ---	1926 VW1
	CURTAIN, Folding Top Rear						
	D2						
	(blue)	1	---- ---	---- ---	---- ---	---- ---	1910 AB1
	(black)	1	---- ---	---- ---	---- ---	---- ---	1910 AX9
	(white)	1	---- ---	---- ---	---- ---	---- ---	1910 AW1
	(blue)	1	---- ---	---- ---	---- ---	---- ---	1911 AB1
	(black)	1	---- ---	---- ---	---- ---	---- ---	1911 AX9
	(white)	1	---- ---	---- ---	---- ---	---- ---	1911 AW1
23-112-46	ZIPPER, Folding Top Rear Curtain						
	W2 (black)	1	---- ---	---- ---	---- ---	---- ---	1923 TX8
	(white)	1	---- ---	---- ---	---- ---	---- ---	1923 VW2
	D2 (black)	1	---- ---	---- ---	---- ---	---- ---	1913 AX8
	(white)	1	---- ---	---- ---	---- ---	---- ---	1913 AW2
23-112-50	TAPE, Folding Top Side Cover to Rear Curtain Closure						
	W2 (black)	1	---- ---	---- ---	---- ---	---- ---	1933 TX8
	(rear curtain to top closure)	1	---- ---	---- ---	---- ---	---- ---	1934 TX8
	W2, D2 (black)	1	---- ---	---- ---	---- ---	---- ---	1933 TX8
	(white)	1	---- ---	---- ---	---- ---	---- ---	1933 VW2
	(black)	1	---- ---	---- ---	---- ---	---- ---	1934 TX8
	(rear curtain to top closure) (white)	1	---- ---	---- ---	---- ---	---- ---	1934 VW2
23-112-70	RETAINER, Folding Top to Belt Bar						
	W2						
	(side)	1	---- ---	---- ---	---- ---	---- ---	2421 944-5
	(center)	1	---- ---	---- ---	---- ---	---- ---	2421 694
	D2						
	(side)	1	---- ---	---- ---	---- ---	---- ---	2482 436-7
	(center)	1	---- ---	---- ---	---- ---	---- ---	2482 438
	(corner)	1	---- ---	---- ---	---- ---	---- ---	2526 966-7

★ Indicates use as required.
⊟ Indicates parts not listed in any previous parts book.
Right and left part numbers are on same line, first number is right, second number is left.
* Indicates change or addition.

MyMopar.com

Printed in U.S.A.
Prices and specifications subject to change without notice.
April 1966, Supersedes May 1965.

CODE	REMARKS	PER CAR	SED.	4D H.T	STA. WGN.	2D H.T	CV. CP.
23-112-75	TIP, Folding Top Wire-on Binding End						
	W1, W2, D2	1	---- ---	---- ---	---- ---	---- ---	*1158 976-7
	Screw (attaching)	2	---- ---	---- ---	---- ---	---- ---	*6024 438
23-112-88	CABLE, Folding Top Tension						
	W2 (black)	2	---- ---	---- ---	---- ---	---- ---	*1970 VX8
	(white)	2	---- ---	---- ---	---- ---	---- ---	*1970 VW2
	W2-P						
	(rear bow to bar belt bracket)	2	---- ---	---- ---	---- ---	---- ---	2166 660
	(side)	2	---- ---	---- ---	---- ---	---- ---	2525 852
	D2 Rear Bow						
	(black)	2	---- ---	---- ---	---- ---	---- ---	1979 AX8
	(white)	2	---- ---	---- ---	---- ---	---- ---	1979 AW2
	Nut	2	---- ---	---- ---	---- ---	---- ---	*6025 727
	Screw	2	---- ---	---- ---	---- ---	---- ---	*6022 169
	D2						
	(side cover)	1	---- ---	---- ---	---- ---	---- ---	2589 026-7
23-112-108	TOP DECK and SIDE QUARTER						
	W2						
	(blue)	1	---- ---	---- ---	---- ---	---- ---	1937 AB1
	(black)	1	---- ---	---- ---	---- ---	---- ---	1937 VX9
	(white)	1	---- ---	---- ---	---- ---	---- ---	1937 VW1
	D2						
	(blue)	1	---- ---	---- ---	---- ---	---- ---	1905 AB1
	(black)	1	---- ---	---- ---	---- ---	---- ---	1905 AX9
	(white)	1	---- ---	---- ---	---- ---	---- ---	1905 AW1
23-112-112	PAD, Folding Top Stay						
	D2						
	(black)	1	---- ---	---- ---	---- ---	---- ---	1906-7 AX9
	(white)	1	---- ---	---- ---	---- ---	---- ---	1906-7 AW1
	Screw (to header)	7	---- ---	---- ---	---- ---	---- ---	*6023 247
	W1, W2						
	(white)	1	---- ---	---- ---	---- ---	---- ---	*1952-3 VW1
	(black)	1	---- ---	---- ---	---- ---	---- ---	*1952-3 VX9
23-112-153	WELL, Well COVER, Pocket PANEL, Folding Top						
	W2						
	(codes H4B, P4B)	1	---- ---	---- ---	---- ---	---- ---	1942 AB4
	(codes H4Q, P4Q)	1	---- ---	---- ---	---- ---	---- ---	1942 AQ4
	(codes H4R, P4R)	1	---- ---	---- ---	---- ---	---- ---	1942 AR5
	(codes H4T, P4T)	1	---- ---	---- ---	---- ---	---- ---	1942 AT6
	(code P4Y)	1	---- ---	---- ---	---- ---	---- ---	1942 AW3
	Cap (fastener) (pocket panel)	2	---- ---	---- ---	---- ---	---- ---	*6000 434
	W2 (paint as required)	1	---- ---	---- ---	---- ---	---- ---	⊟2084-5 AT6
	D2 (paint as required)	1	---- ---	---- ---	---- ---	---- ---	⊟2000-1 AT8
	Screw (upper attaching)	2	---- ---	---- ---	---- ---	---- ---	*6023 381
	D2 (well)						
	(codes L4B, H4B)	1	---- ---	---- ---	---- ---	---- ---	⊟1994 AB4
	(codes L4Q, H4Q)	1	---- ---	---- ---	---- ---	---- ---	⊟1994 AQ4
	(codes L4R, H4R)	1	---- ---	---- ---	---- ---	---- ---	⊟1994 AR7
	(codes L4T, H4T)	1	---- ---	---- ---	---- ---	---- ---	⊟1994 AT6
	(code L4Y)	1	---- ---	---- ---	---- ---	---- ---	⊟1994 AY3
	(code L4X)	1	---- ---	---- ---	---- ---	---- ---	⊟1994 AX9
23-112-160	PAD, Folding Top Pocket Panel Arm Rest						
	W2-H						
	(code H4B)	1	---- ---	---- ---	---- ---	---- ---	*1202-3 AB4
	(code H4Q)	1	---- ---	---- ---	---- ---	---- ---	*1202-3 AQ4
	(code H4R)	1	---- ---	---- ---	---- ---	---- ---	*1202-3 AR5
	(code H4T)	1	---- ---	---- ---	---- ---	---- ---	*1202-3 VT6

★ Indicates use as required.
⊟ Indicates parts not listed in any previous parts book.
May 1965.

MyMopar.com

Prices and specifications subject to change without notice.
Right and left part numbers are on same line, first number is right, second number is left.

Printed in U.S.A.

CODE	REMARKS	PER CAR	SED.	4D H.T	STA. WGN.	2D H.T	CV. CP.
23-112-160	PAD, Folding Top Pocket Panel Arm Rest - Cont'd						
	W2-P						
	(code P4B)	1	---- ---	---- ---	---- ---	---- ---	1202-3 AB4
	(code P4Q)	1	---- ---	---- ---	---- ---	---- ---	1202-3 AQ4
	(code P4R)	1	---- ---	---- ---	---- ---	---- ---	1202-3 AR5
	(code P4T)	1	---- ---	---- ---	---- ---	---- ---	1202-3 VT6
	(code P4X)	1	---- ---	---- ---	---- ---	---- ---	1202-3 VX9
	(code P4Y)	1	---- ---	---- ---	---- ---	---- ---	1202-3 AW3
	D2						
	(codes L4B, L9B, H4B)	2	---- ---	---- ---	---- ---	---- ---	1244-5 AB8
	(codes L4Q, H4Q)	2	---- ---	---- ---	---- ---	---- ---	1244-5 AQ8
	(codes L4R, L9R, H4R)	2	---- ---	---- ---	---- ---	---- ---	1244-5 AR8
	(codes L4T, H4T)	2	---- ---	---- ---	---- ---	---- ---	1244-5 AT8
	(codes H4X, L9X)	2	---- ---	---- ---	---- ---	---- ---	1244-5 AX9
	(code L4Y)	2	---- ---	---- ---	---- ---	---- ---	1244-5 AY3
23-113-2	WEATHERCORD, Door (sold by the inch)						
	D2						
	(codes L1B, K1B, L3B, L4B, L5B, L9B, H1B, H4B, P1B)	★	1536 AB4	1536 AB4	1536 AB4	1536 AB4	1536 AB4
	(codes L1Q, K1Q, L4Q, H1Q, H4Q, P1Q)	★	1536 AQ4	1536 AQ4	1536 AQ4	1536 AQ4	1536 AQ4
	(codes L1R, K1R, L3R, L4R, L5R, L9R, H1R, H4R, P4R)	★	1536 AR5	1536 AR5	1536 AR5	1536 AR5	1536 AR5
	(codes L1T, K1T, L3T, L4T, L5T, H1T, H4T)	★	1536 AT6	1536 AT6	1536 AT6	1536 AT6	1536 AT6
	(code P4T)	★	---- ---	---- ---	---- ---	1536 AT5	
	(code P4U)	★	---- ---	---- ---	---- ---	1536 AU8	
	(codes L3X, L9X, H4X, P4X)	★	---- ---	1536 AX8	---- ---	1536 AX8	1536 AX8
	(codes L1Y, K1Y, L4Y, H1Y, H4Y)	★	1536 AY3	1536 AY3	1536 AY3	1536 AY3	1536 AY3
23-113-31	RETAINER, Weathercord						
	D2						
	(door)	★	2572 133	2572 133	2572 133	2572 133	2572 133
23-113-45	WEATHERCORD, Quarter Window Opening						
	W1, W2						
	(codes L1B, K1B)	2	1515 AB4				
	(codes L1Q, K1Q)	2	1515 AQ4				
	(codes L1R, K1R)	2	*1515 TR6				
	(codes L1T, L2T, K1T, K2T, L8T, K8T)	2	1515 VT6				
23-113-52	STRIP, Instrument Panel to Windshield Glass						
	D2						
	(codes L1B, K1B, L3B, L4B, L5B, L9B, H1B, H4B, P1B, L6B)	1	3710 AB8	3710 AB8	3710 AB8	3710 AB8	3710 AB8
	(codes L1Q, K1Q, L4Q, H1Q, H4Q, P1Q, L6Q,)	1	3710 AQ8	3710 AQ8	3710 AQ8	3710 AQ8	3710 AQ8
	(codes L1R, K1R, L3R, L4R, L9R, L5R, H1R, H4R, P4R, L6R)	1	3710 AR9	3710 AR9	3710 AR9	3710 AR9	3710 AR9
	(codes L1T, K1T, L3T, L4T, L5T, H1T, H4T, L6T)	1	3710 AT8	3710 AT8	3710 AT8	3710 AT8	3710 AT8
	(code P4T)	1	---- ---	---- ---	---- ---	3710 AT9	
	(codes L3X, L9X, H4X, P4X)	1	---- ---	---- ---	---- ---	3710 AX9	3710 AX9
	(codes L1Y, K1Y, L4Y, H1Y, H4Y)	1	3710 AY8	3710 AY8	3710 AY8	3710 AY8	3710 AY8
	(codes L2A, K2A, L8A, K8A)	1	3710 AX9				

● Indicates use as required.
⊟ Indicates parts not listed in any previous parts book.
Right and left part numbers are on same line, first number is right, second number is left.
* Indicates change or addition.

Printed in U.S.A.
Prices and specifications subject to change without notice.
April 1966, Supersedes May 1965.

MyMopar.com

CODE	REMARKS	PER CAR	SED.	4D H.T	STA. WGN.	2D H.T	CV. CP.
23-113-56	WEATHERCORD, Folding Top Header						
	W2 (blue)	1	---- ---	---- ---	---- ---	---- ---	*1946 VB1
	(black)	1	---- ---	---- ---	---- ---	---- ---	1946 VX9
	(white)	1	---- ---	---- ---	---- ---	---- ---	1946 VW1
23-113-58	RETAINER, Instrument Panel to Windshield Glass Finish Strip						
	D2	1	2571 683	2571 683	2571 683	2571 683	2571 683
23-113-84	WELT, Folding Top Header						
	W2 (61" long)						
	(black)	1	---- ---	---- ---	---- ---	---- ---	1959 VX8
	(white)	1	---- ---	---- ---	---- ---	---- ---	1959 VW2
	(dust boot filler channel attach)						
	W2, D2	★	---- ---	---- ---	---- ---	---- ---	*2572 166
23-114-10	BINDING, 5/8" Wire-On						
	W1, W2 (blue)	1	---- ---	---- ---	---- ---	1903 VB1	
	(white)	1	---- ---	---- ---	---- ---	1903 VW1	
	(black)	1	---- ---	---- ---	---- ---	1903 TX8	
	D2 (blue)	1	---- ---	---- ---	---- ---	---- ---	1903 VB1
	(white)	1	---- ---	---- ---	---- ---	---- ---	1903 VW1
	(black)	1	---- ---	---- ---	---- ---	---- ---	1903 TX8
23-115-4	PUSH NUT, Front Seat Back to Cushion						
	W1, W2, D2	4	---- ---	---- ---	---- ---	2410 102	2410 102
	(3rd. seat back hinge support)	2	---- ---	---- ---	2410 102		
23-115-5	WASHER, Front Seat Center Arm Rest Trim						
	D2-H	2	1918 299	1918 299	1918 299	1918 299	1918 299
23-115-6	CLIP, Tailgate Opening Cover Upper Retainer						
	D2	6	---- ---	---- ---	2581 395		
	FASTENER (seat back medallion) W2, D2	★	2577 380	2577 380	2577 380	2577 380	2577 380
	PIN (front seat back frame to cushion frame mtg.)	4	---- ---	---- ---	---- ---	2410 054	2410 054
	CLIP, Front Seat Outer Hinge Arm Cover						
	W1, W2	2	*2494 114	---- ---	---- ---	*2494 114	*2494 114
23-115-8	CLIP, Wheelhouse Cover						
	D2	13	---- ---	---- ---	2572 142		
	(belt bar to spare tire cover)	2	---- ---	---- ---	2581 718		
23-115-10	SCREW, Front Seat Center Arm Rest to Center Cushion						
	D2-H	2	2092 212	2092 212	2092 212	2092 212	2092 212

★ Indicates use as required.
B Indicates parts not listed in any previous parts book.
April 1966, Supersedes May 1965.

Printed in U.S.A
Prices and specifications subject to change without notice.
Right and left part numbers are on same line, first number is right, second number is left.
* Indicates change or addition.

MyMopar.com

1965 DART

INTERIOR TRIM

HOW TO USE INTERIOR TRIM ILLUSTRATIONS

The illustrations in this section are actual and each body style showing the Interior Trim is included.

The letters shown on the illustration indicate the description of the part and the part type code when referred to the legend which appears preceding the listing of the parts. The letters are consistent throughout the illustrations as "A" is always a Door Trim Panel, Code 23-92-5.

The numbers on the illustration indicate the distribution of material and type of material used. The numbers may vary with each illustration. The legend appears on the illustration.

Appearing throughout this section are part numbers containing both letters and numbers. These are good serviceable part numbers. The combination of letters and numbers merely indicates the parts are keyed to the interior color of the vehicles on which they are used.

For complete information on "How to Order" Trim Parts, see Master Parts Price List.

MyMopar.com

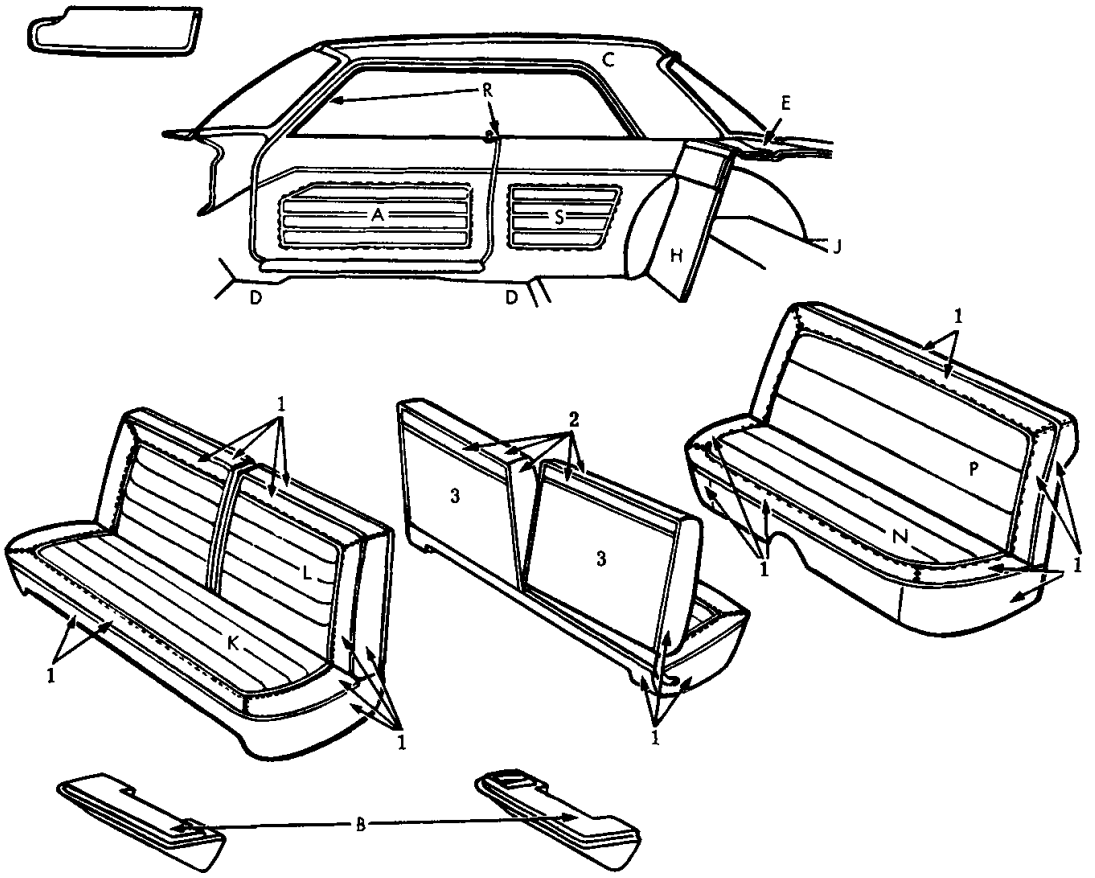

19T0127 A

ITEM	TYPE OF MATERIAL	PART TYPE CODE	MAT'L WIDTH	PART NUMBERS AND COLORS			
				BLUE	TURQUOISE	RED	TAN
1	Vinyl 32 oz.	23-114-15	54"	0405 AB4	0405 AQ4	0405 AR5	0405 VT6
2	Vinyl 32 oz.	23-114-15	54"	0405 AB8	0405 AQ8	0405 AR8	*0405 VT6
3	Vinyl 37 oz.	23-114-15	58"	0413 AB8	0413 AQ8	0413 AR8	0413 AT8

Distribution Drawing Legend Page Appears Following Illustration Section

1965 DART AL1-H, AL2-H 2 DOOR SEDAN
CLOTH AND VINYL TRIM
CODES H1B, H1Q, H1R, H1T

MyMopar.com

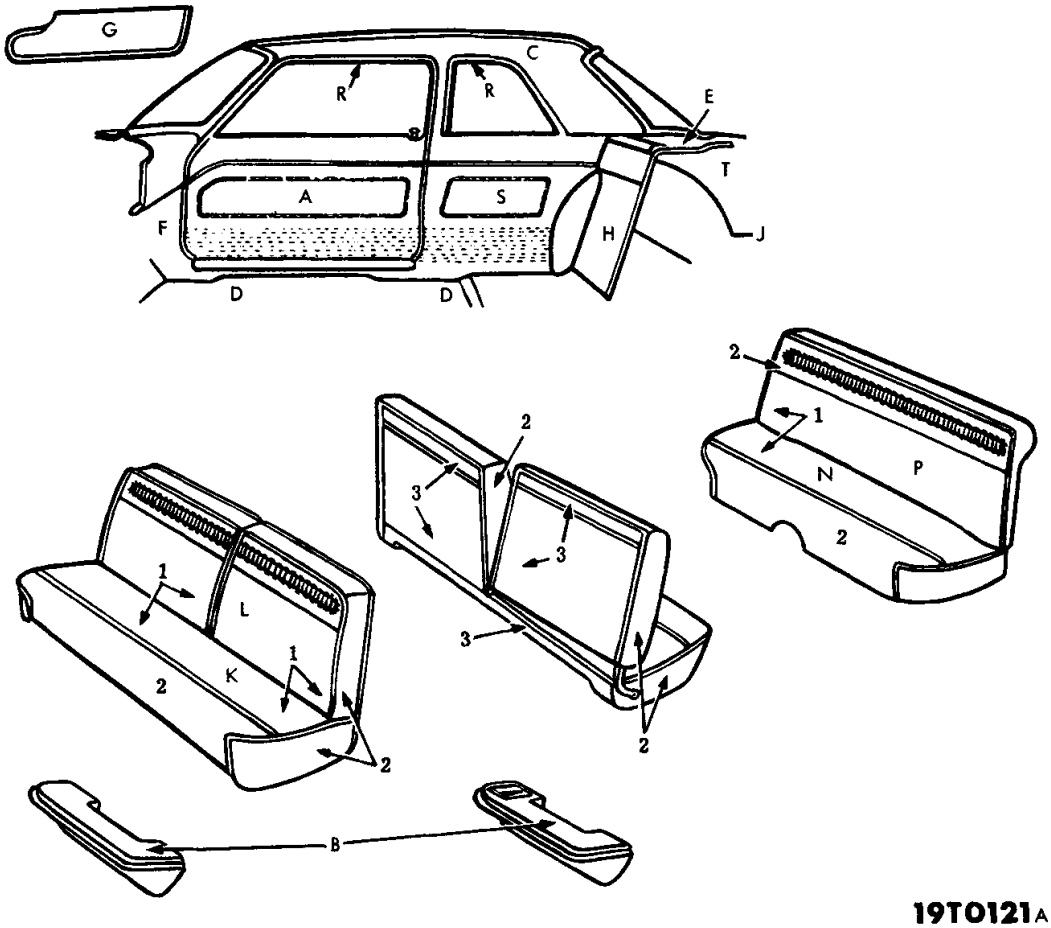

19T0121A

ITEM	TYPE OF MATERIAL	PART TYPE CODE	MAT'L WIDTH	PART NUMBERS AND COLORS BLUE	TURQUOISE	RED	TAN
1	Body Cloth	23-114-2	54"	⊟0102 ABB	⊟0102 AQQ	⊟0102 ARR	⊟0102 ATT
2	Vinyl 32 oz.	23-114-15	54"	⊟0405 AB4	⊟0405 AQ4	⊟0405 AR5	0405 VT6
3	Vinyl 37 oz.	23-114-15	58"	⊟0417 AB4	⊟0417 AQ4	⊟0417 AR5	0417 VT6

Distribution Drawing Legend Page Appears Following Illustration Section

1965 DART AL1-L, AL2-L 2 DOOR SEDAN
CLOTH AND VINYL TRIM
CODES L1B, L1Q, L1R, L1T

★ Indicates use as required.
⊟ Indicates parts not listed in any previous parts book.

Printed in U.S.A.
Prices and specifications subject to change without notice.
May 1965, Supersedes Sept. 4, 1964.

MyMopar.com

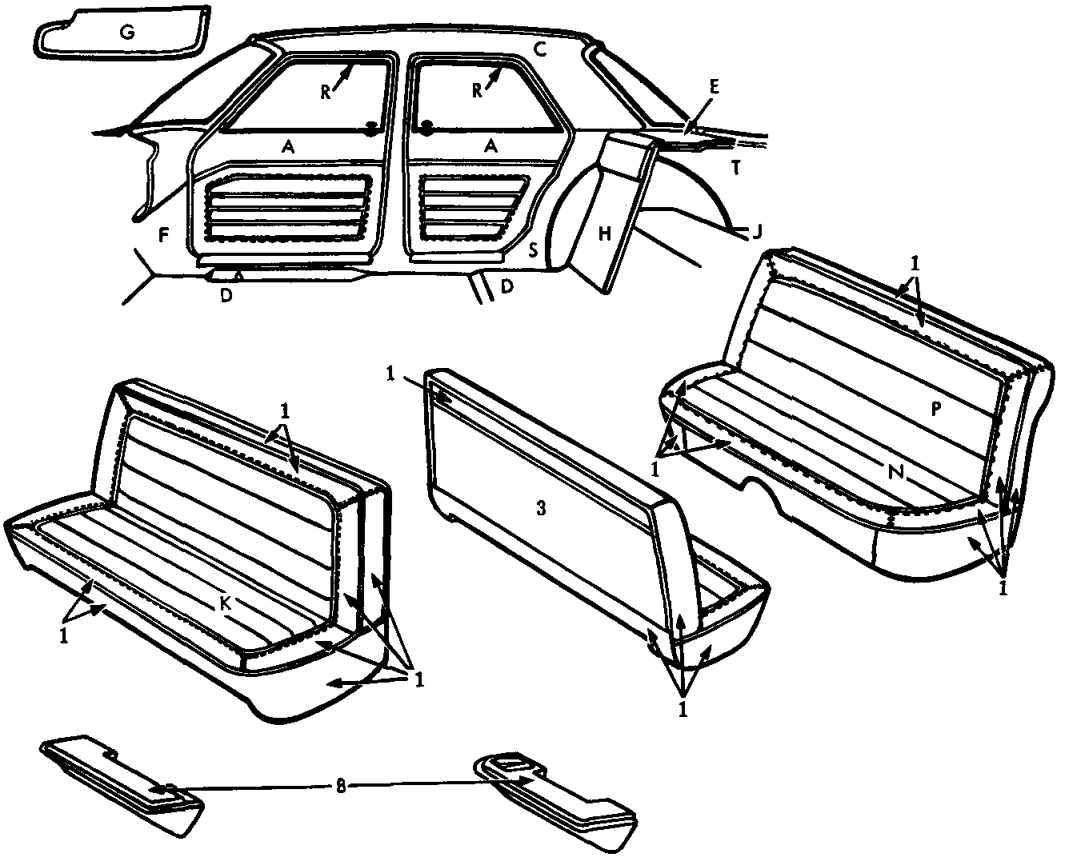

19T0125A

ITEM	TYPE OF MATERIAL	PART TYPE CODE	MAT'L WIDTH	PART NUMBERS AND COLORS BLUE	TURQUOISE	RED	TAN
1	Vinyl 32 oz.	23-114-15	54"	0405 AB4	0405 AQ4	0405 AR5	0405 VT6
2	Vinyl 32 oz.	23-114-15	54"	0405 AB8	0405 AQ8	0405 AR8	*0405 VT6
3	Vinyl 37 oz.	23-114-15	58"	0413 AB8	0413 AQ8	0413 AR8	0413 AT8

Distribution Drawing Legend Page Appears Following Illustration Section

1965 DART AL1-H, AL2-H 4 DOOR SEDAN
CLOTH AND VINYL TRIM
CODES H1B, H1Q, H1R, H1T

MyMopar.com

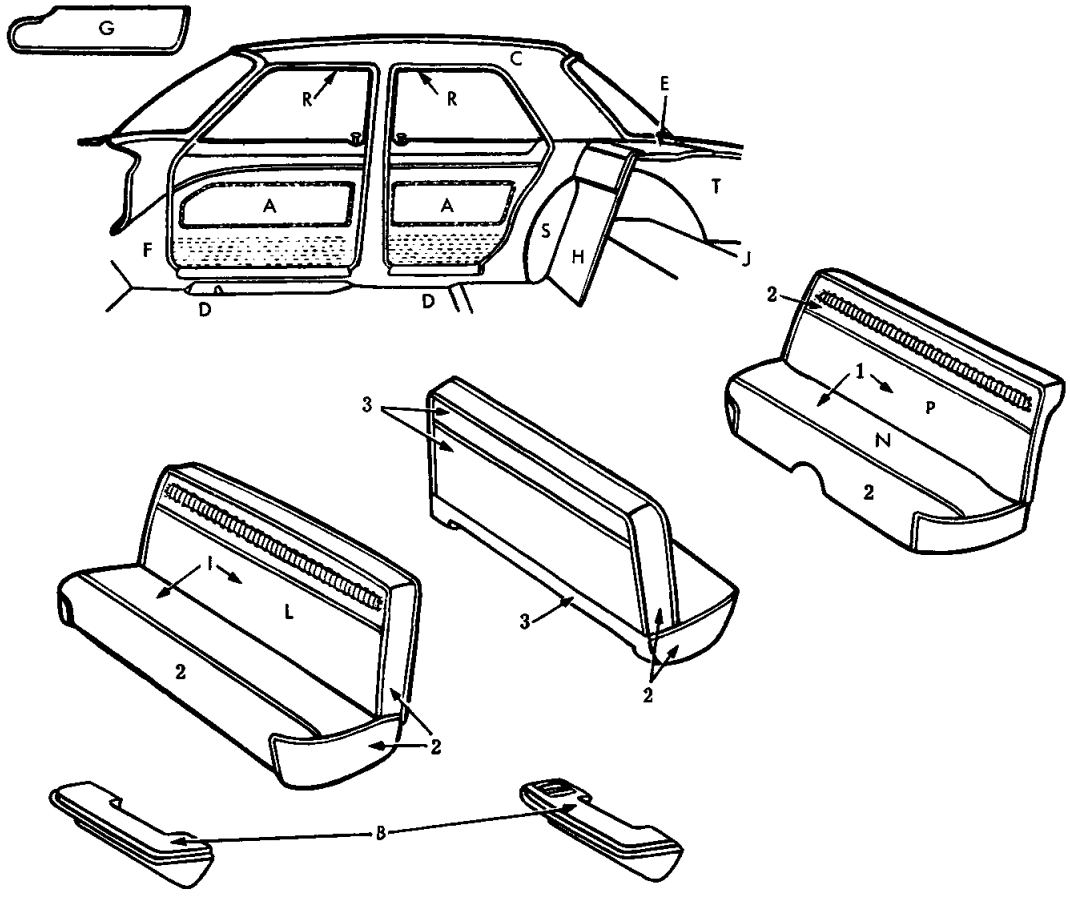

19T0122 A

ITEM	TYPE OF MATERIAL	PART TYPE CODE	MAT'L WIDTH	PART NUMBERS AND COLORS BLUE	TURQUOISE	RED	TAN
1	Body Cloth	23-114-2	54"	B0102 ABB	B0102 AQQ	B0102 ARR	B0102 ATT
2	Vinyl 32 oz.	23-114-15	54"	B0405 AB4	B0405 AQ4	B0405 AR5	0405 VT6
3	Vinyl 37 oz.	23-114-15	58"	B0417 AB4	B0417 AQ4	B0417 AR5	0417 VT6

Distribution Drawing Legend Page Appears Following Illustration Section

1965 DART AL1-L, AL2-L 4 DOOR SEDAN
CLOTH AND VINYL TRIM
CODES L1B, L1Q, L1R, L1T

★ Indicates use as required.
B Indicates parts not listed in any previous parts book.

MyMopar.com

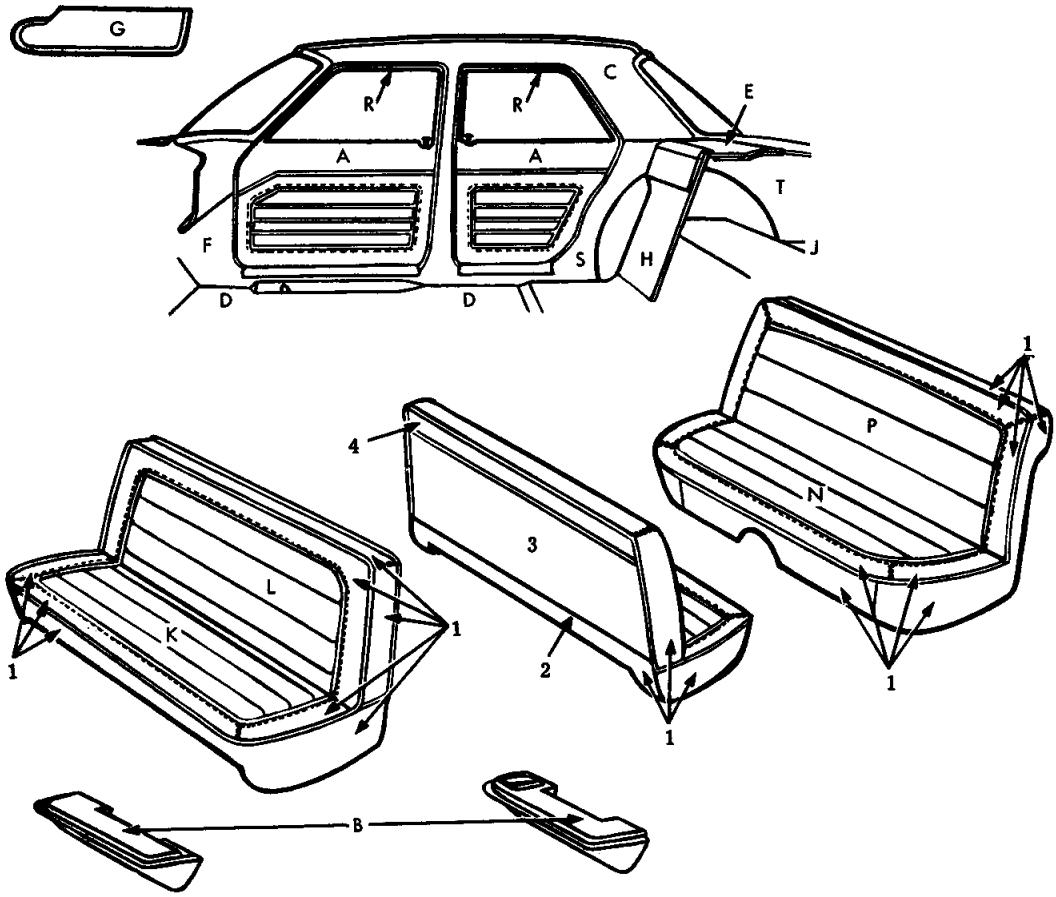

19T0128A

ITEM	TYPE OF MATERIAL	PART TYPE CODE	MAT'L WIDTH	PART NUMBERS AND COLORS BLUE	TURQUOISE	RED	TAN
1	Vinyl 32 oz.	23-114-15	54"	0405 AB4	0405 AQ4	0405 AR5	0405 VT6
2	Vinyl 32 oz.	23-114-15	54"	0405 AB8	0405 AQ8	0405 AR8	*0405 VT6
3	Vinyl 37 oz.	23-114-15	58"	0413 AB8	0413 AQ8	0413 AR8	0413 AT8
4	Vinyl 37 oz.	23-114-15	58"	*0417 AB8	*0417 AQ8	*0417 AR5	B0417 AT8

Distribution Drawing Legend Page Appears Following Illustration Section

1965 DART AL1-H, AL2-H 4 DOOR SEDAN
VINYL TRIM
CODES H4B, H4Q, H4R, H4T

★ Indicates use as required.
B Indicates parts not listed in any previous parts book.
May 1965, Supersedes Sept. 4, 1964.

Printed in U.S.A.
Prices and specifications subject to change without notice.
• Indicates change or addition.

MyMopar.com

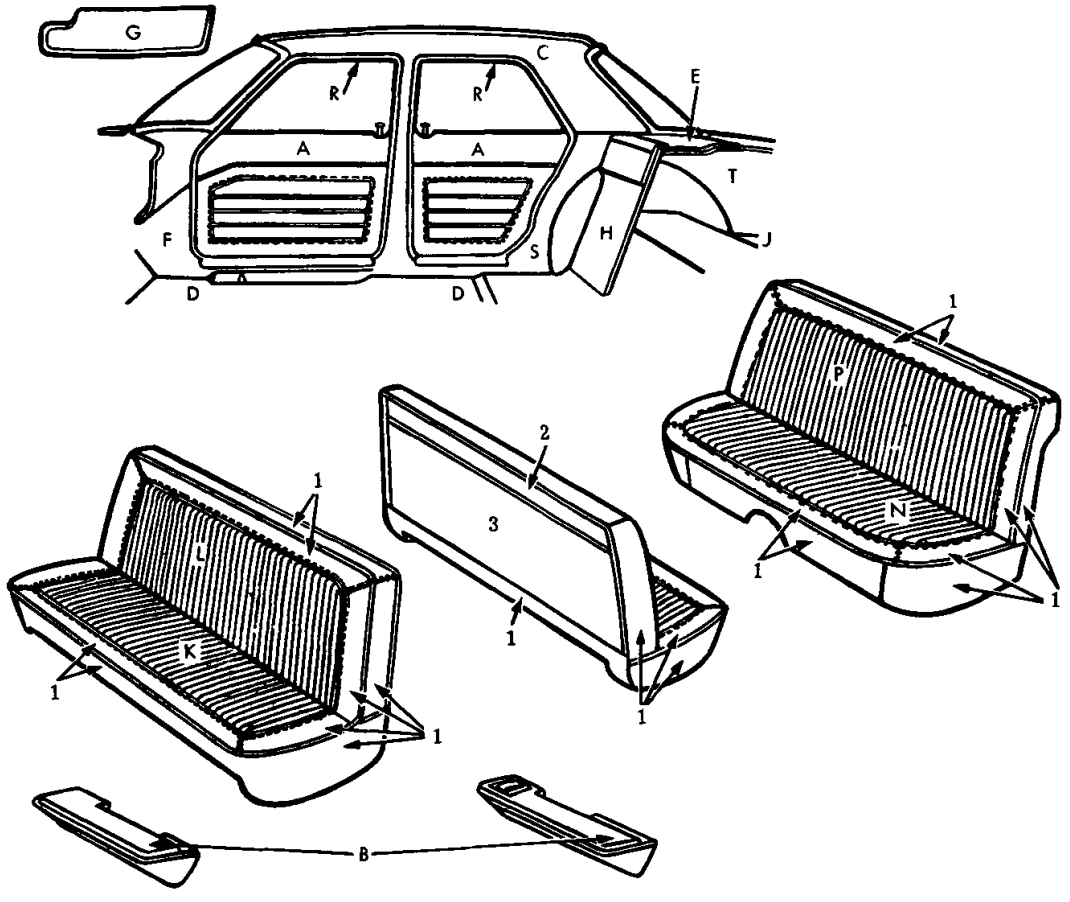

19T0124 A

ITEM	TYPE OF MATERIAL	PART TYPE CODE	MAT'L WIDTH	PART NUMBERS AND COLORS BLUE	RED	TAN	
1	Vinyl 32 oz.	23-114-15	54"	0405 AB4	0405 AR5	0405 VT6	
2	Vinyl 37 oz.	23-114-15	54"	0417 AB4	0417 AR5	0417 VT6	
3	Vinyl 37 oz.	23-114-15	58"	0413 AB8	0413 AR8	0413 AT8	

Distribution Drawing Legend Page Appears Following Illustration Section

1965 DART AL1-L, AL2-L, AL1-H, AL2-H 4 DOOR SEDAN
VINYL TRIM
CODES L5B, H5B, L5R, H5R, L5T, H5T

MyMopar.com

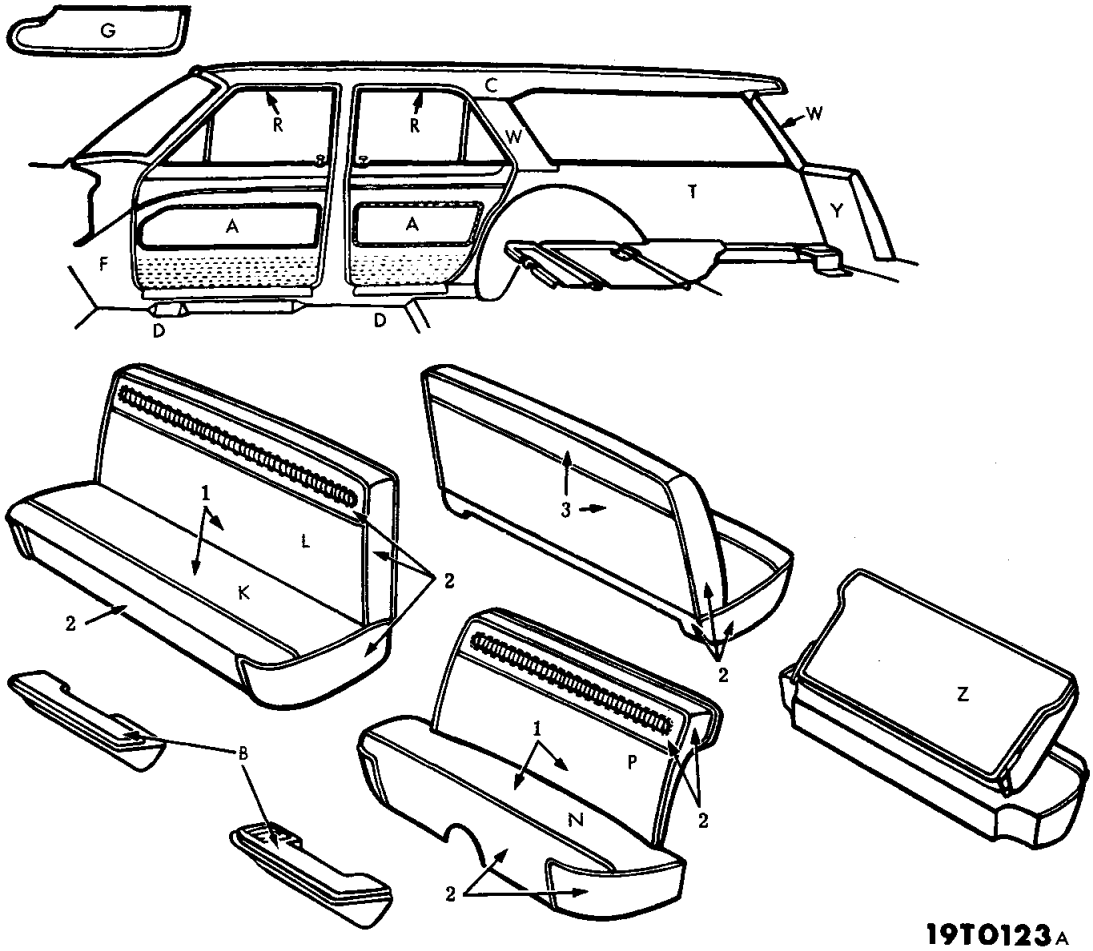

ITEM	TYPE OF MATERIAL	PART TYPE CODE	MAT'L WIDTH	PART NUMBERS AND COLORS BLUE	TURQUOISE	RED	TAN
1	Vinyl 34.4 oz.	23-114-15	58″	0492 ABB	0492 AQQ	0492 ARR	0492 ATT
2	Vinyl 32 oz.	23-114-15	54″	0405 AB4	0405 AQ4	0405 AR5	0405 VT6
3	Vinyl 32 oz.	23-114-15	54″	0405 AB8	0405 AQ8	0405 AR5	*0405 VT6

Distribution Drawing Legend Page Appears Following Illustration Section

1965 DART A1-L, A2-L STATION WAGON
VINYL TRIM
CODES L4B, L4Q, L4R, L4T

MyMopar.com

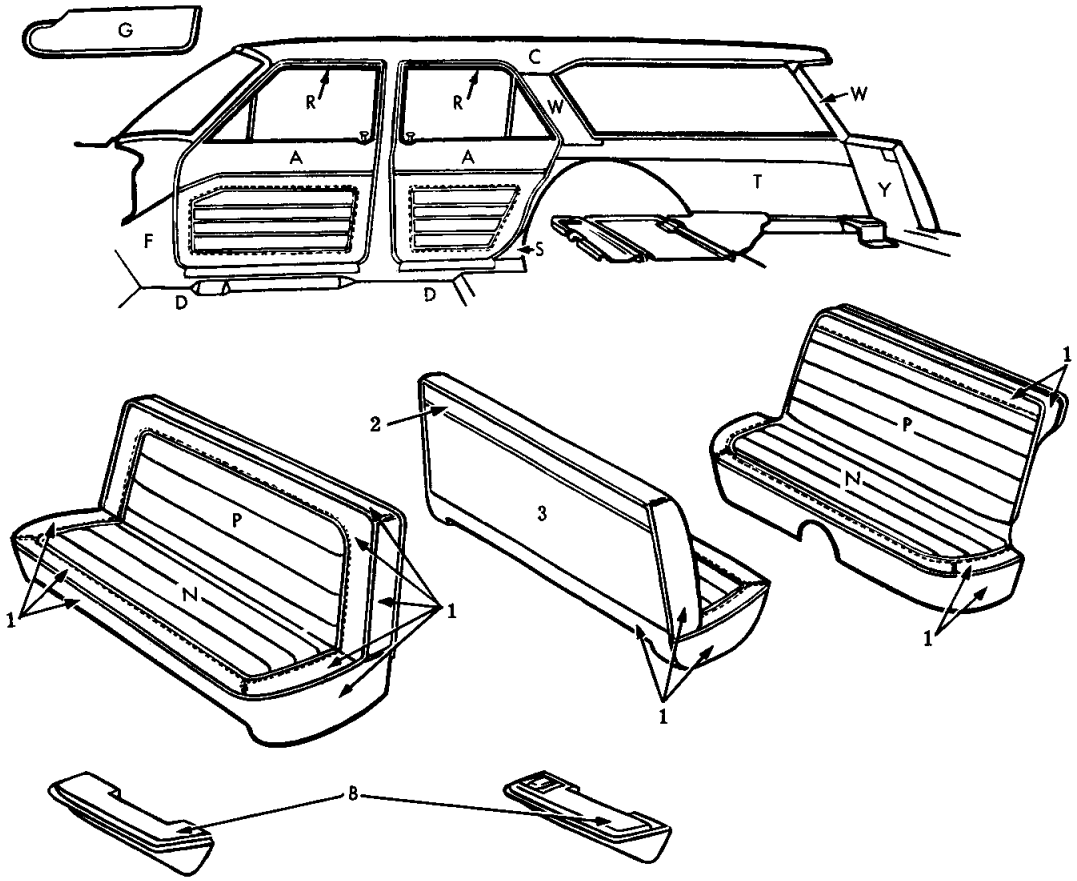

19T0130A

ITEM	TYPE OF MATERIAL	PART TYPE CODE	MAT'L WIDTH	PART NUMBERS AND COLORS			
				BLUE	TURQUOISE	RED	TAN
1	Vinyl 32 oz.	23-114-15	54"	0405 AB4	0405 AQ4	0405 AR5	0405 VT6
2	Vinyl 32 oz.	23-114-15	54"	0405 AB8	0405 AQ8	0405 AR8	0405 VT6
3	Vinyl 37 oz.	23-114-15	58"	0413 AB8	0413 AQ8	0413 AR8	0413 AT8

Distribution Drawing Legend Page Appears Following Illustration Section

1965 DART AL1-H, AL2-H STATION WAGON
VINYL TRIM
CODES H4B, H4Q, H4R, H4T

★ Indicates use as required.
⊟ Indicates parts not listed in any previous parts book.
* Indicates change or addition.

Printed in U.S.A.
Prices and specifications subject to change without notice.
May 1965, Supersedes Sept. 4, 1964.

MyMopar.com

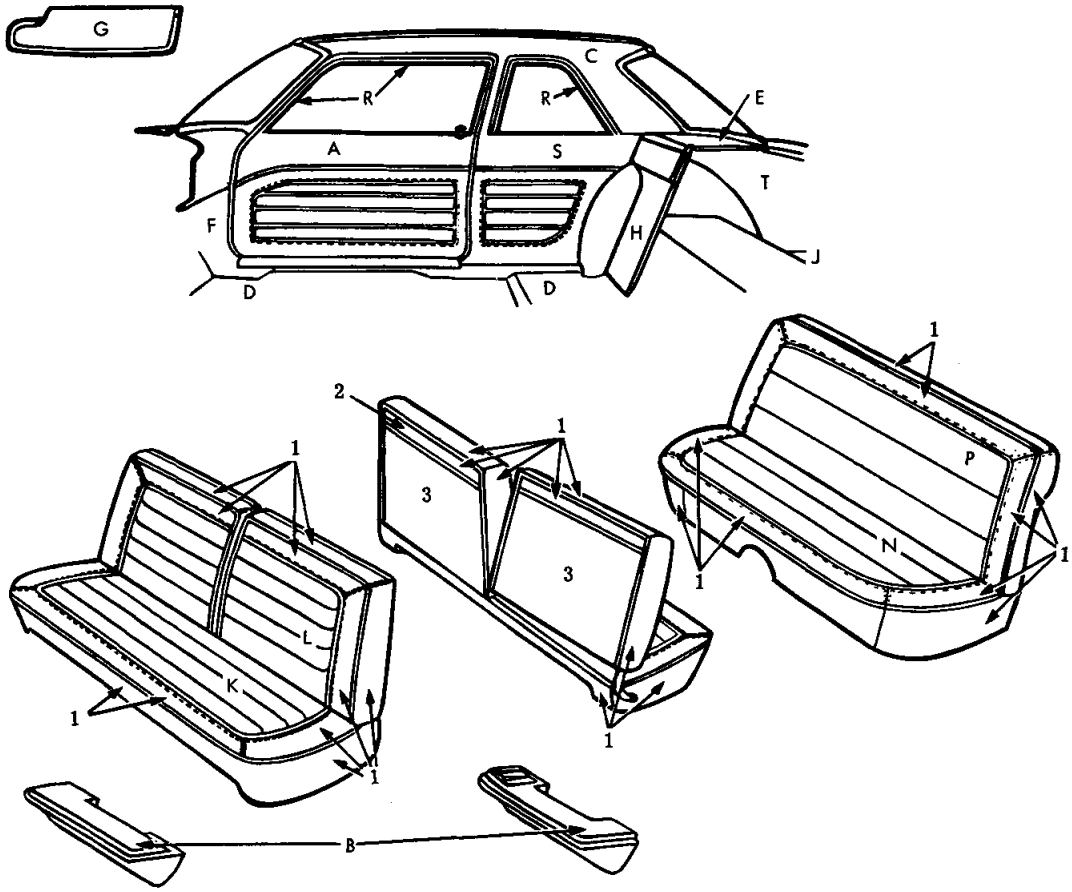

19T0126A

ITEM	TYPE OF MATERIAL	PART TYPE CODE	MAT'L WIDTH	PART NUMBERS AND COLORS BLUE	TURQUOISE	RED	TAN
1	Vinyl 32 oz.	23-114-15	54"	0405 AB4	0405 AQ4	0405 AR5	0405 VT6
2	Vinyl 32 oz.	23-114-15	54"	0405 AB8	0405 AQ8	0405 AR8	*0405 VT6
3	Vinyl 37 oz.	23-114-15	58"	0413 AB8	0413 AQ8	0413 AR8	0413 AT8

Distribution Drawing Legend Page Appears Following Illustration Section

1965 DART AL1-H, AL2-H 2 DOOR HARD TOP
CLOTH AND VINYL TRIM
CODES H1B, H1Q, H1R, H1T

MyMopar.com

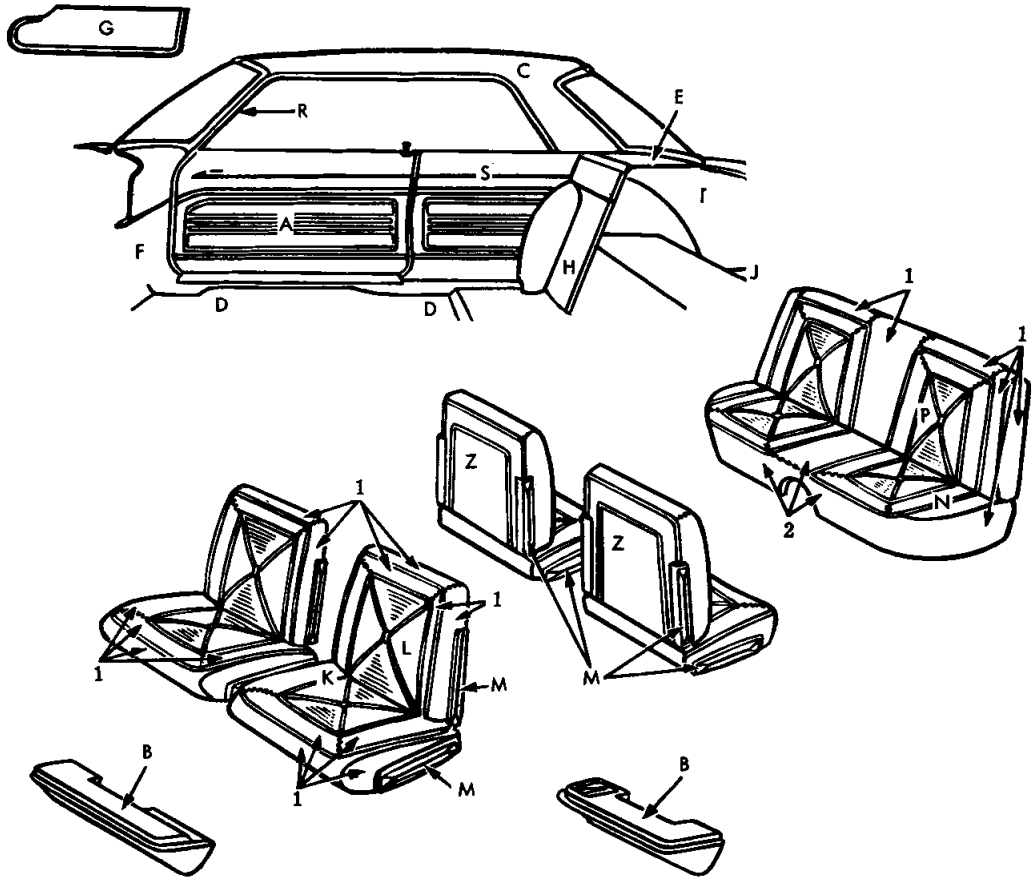

19T0131A

ITEM	TYPE OF MATERIAL	PART TYPE CODE	MAT'L WIDTH	PART NUMBERS AND COLORS			
				BLUE	RED	TAN	BLACK
1	Vinyl 35.5 oz.	23-114-15	54"	0441 AB4	0441 VR7	0441 VT6	0441 VX9

ITEM	TYPE OF MATERIAL	PART TYPE CODE	MAT'L WIDTH	PART NUMBERS AND COLORS			
				GOLD			
1	Vinyl 35.5 oz.	23-114-15	54"	0441 VW3			

Distribution Drawing Legend Page Appears Following Illustration Section

1965 DART AL1-P, AL2-P 2 DOOR HARD TOP
VINYL TRIM
CODES P4B, P4R, P4T, P4X, P4Y

★ Indicates use as required.
⊟ Indicates parts not listed in any previous parts book.
* Indicates change or addition.

MyMopar.com

Printed in U.S.A.
Prices and specifications subject to change without notice.
May 1965, Supersedes Sept. 4, 1964.

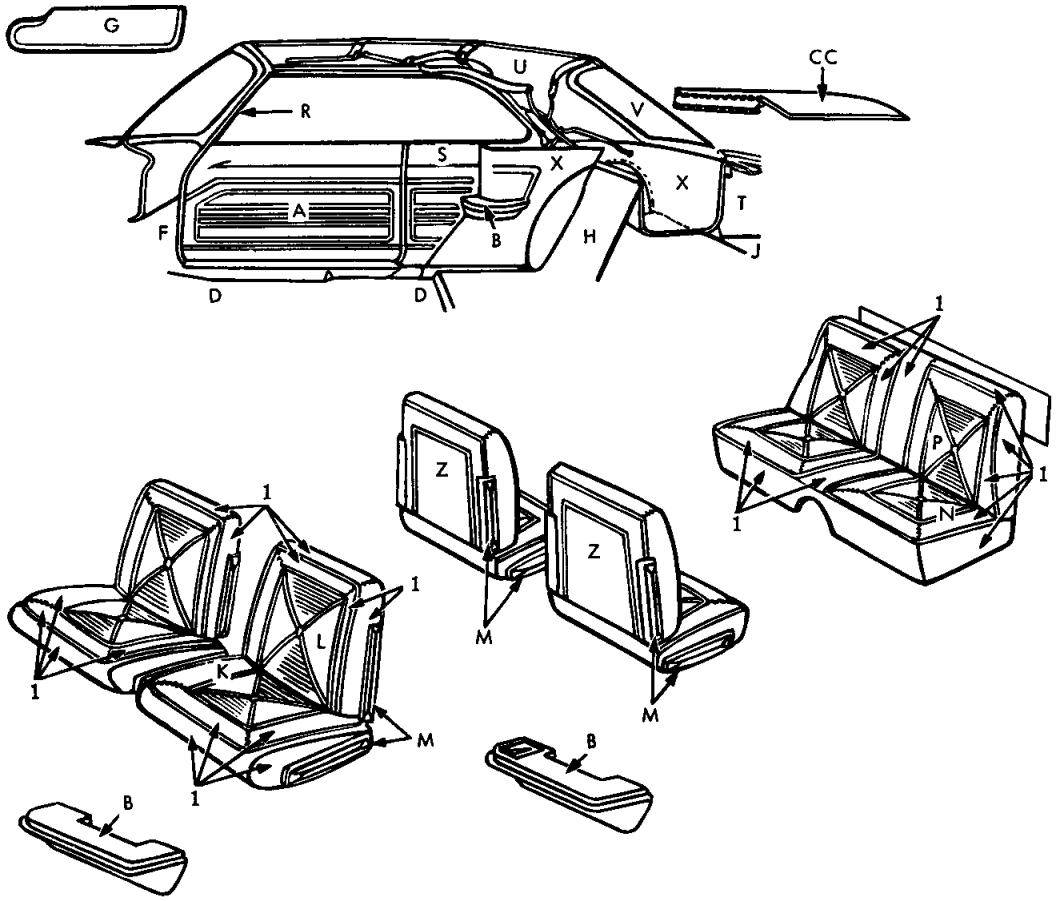

19T0132 A

ITEM	TYPE OF MATERIAL	PART TYPE CODE	MAT'L WIDTH	PART NUMBERS AND COLORS BLUE	RED	TAN	BLACK
1	Vinyl 35.5 oz.	23-114-15	54"	0441 AB4	0441 VR7	0441 VT6	0441 VX9

ITEM	TYPE OF MATERIAL	PART TYPE CODE	MAT'L WIDTH	PART NUMBERS AND COLORS GOLD			
1	Vinyl 35.5 oz.	23-114-15	54"	0441 VW3			

Distribution Drawing Legend Page Appears Following Illustration Section

1965 DART AL1-P, AL2-P CONVERTIBLE
VINYL TRIM
CODES P4B, P4R, P4T, P4X, P4Y

MyMopar.com

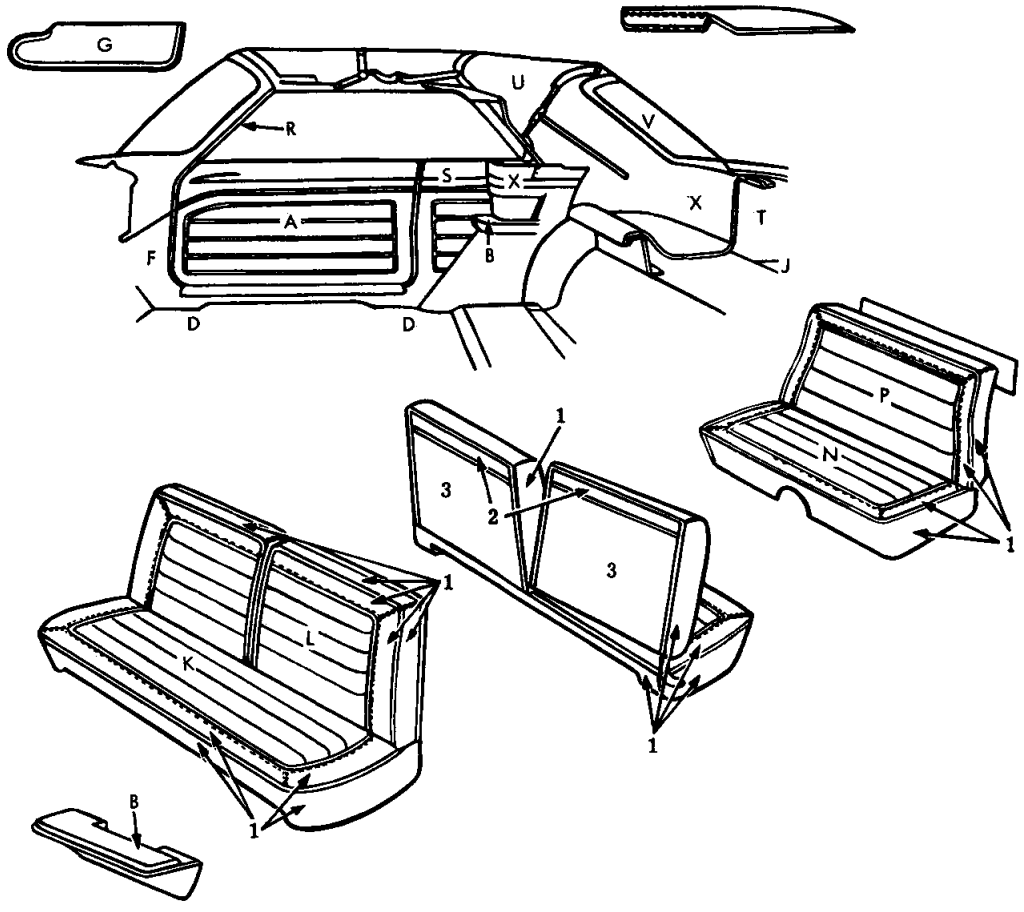

19T0129A

ITEM	TYPE OF MATERIAL	PART TYPE CODE	MAT'L WIDTH	PART NUMBERS AND COLORS BLUE	TURQUOISE	RED	TAN
1	Vinyl 32 oz.	23-114-15	54"	0405 AB4	0405 AQ4	0405 AR5	0405 VT6
2	Vinyl 32 oz.	23-114-15	54"	0405 AB8	0405 AQ8	0405 AR8	*0405 VT6
3	Vinyl 37 oz.	23-114-15	58"	0413 AB8	0413 AQ8	0413 AR8	0413 AT8

Distribution Drawing Legend Page Appears Following Illustration Section

1965 DART AL1-H, AL2-H CONVERTIBLE
VINYL TRIM

CODES H4B, H4Q, H4R, H4T

★ Indicates use as required.
⊟ Indicates parts not listed in any previous parts book.
* Indicates change or addition.

MyMopar.com

Printed in U.S.A.
Prices and specifications subject to change without notice.
May 1965, Supersedes Sept. 4, 1964.

1965 DART - A SERIES

Distribution Drawing Legend

See Illustration For Letter Identification

Letter	Description	Code
A	Panel, Door Trim	23-92-5
B	Arm Rest, Door, Front	23-76-3
	Center, Front Seat	23-76-34
	Door, Rear	23-76-59
	Quarter Panel	23-76-66
C	Headlining	23-86-3
D	Floor Cover, Front, Carpet	23-79-3
	Rear, Carpet	23-79-33
E	Panel, Shelf Trim	23-102-3
F	Panel, Cowl Trim	23-91-6
G	Visor	23-103-3
H	Panel, Luggage Compartment Front	23-96-3
J	Carpet, Luggage Compartment Floor	23-79-64
K	Cover, Front Seat Cushion	23-108-5
L	Cover, Front Seat Back	23-108-16
M	Cover, Front Seat Hinge	23-108-84
N	Cover, Rear Seat Cushion	23-109-36
P	Cover, Rear Seat Back	23-109-4
Q	Insert, Rear Seat Cushion Bottom Panel	23-109-40
R	Weathercord, Door	23-113-2
	Hinge Pillar	23-113-25
	Lock Pillar	23-113-30
	w/Weatherstrip	23-66-33
S	Panel, Quarter Trim	23-101-3
T	Panel or Cover, Luggage Compartment Side Lining	23-96-8
U	Top Deck and Side Quarter	23-112-108
V	Curtain, Folding Top Back	23-112-45
W	Cover, Center Pillar	23-99-4
X	Well Cover, Pocket Panel, Pocket Panel Cover, Folding Top	23-112-153
Y	Insert, Tailgate Inside Panel	23-79-79
Z	Insert, Rear Seat Back Panel	23-109-5
	Insert, Front Seat Back Panel	23-108-32

MyMopar.com

BODY CODE	COLUMN LEGEND
	AL1-L, AL2-L (170)
L-11 (21)	2 D. Sedan
L-13 (41)	4 D. Sedan
L-56 (45)	Station Wagon (6 Pass.)
	AL1-H, AL2-H (270)
L-31 (21)	2 D. Sedan
L-33 (41)	4 D. Sedan
L-56 (45)	Station Wagon (6 Pass.)
L-32 (23)	2 D. Hard Top
L-35 (27)	Convertible
	AL1-P, AL2-P (G.T. 200)
L-42 (23)	2 D. Hard Top
L-45 (27)	Convertible

CONVERTIBLE TOP COLOR LEGEND

1 Blue 2 White 0 Black

STARTING SERIAL NUMBERS

	Detroit Built	St. Louis Built	Los Angeles Built
AL1-L (Dart 170)	2152-100001	2157-100001	2155-100001
AL2-L (Dart 170)	L152-100001	L157-100001	L155-100001
AL1-L (Dart Station Wagon 170)	2552-100001	2557-100001	2555-100001
AL2-L (Dart Station Wagon 170)	L552-100001	L557-100001	L555-100001
AL1-H (Dart 270)	2352-100001	2357-100001	2355-100001
AL2-H (Dart 270)	L352-100001	L357-100001	L355-100001
AL1-H (Dart Station Wagon 270)	2752-100001	2757-100001	2755-100001
AL2-H (Dart Station Wagon 270)	L752-100001	L757-100001	L755-100001
AL1-P (G.T.)	2452-100001	2457-100001	2455-100001
AL2-P (G.T.)	L452-100001	L457-100001	L455-100001

TRIM CODE	MODEL	MATERIAL			COLOR	6WD. SED.	SED.	4D H.T	STA. WGN.	2D H.T	CV. CP.
		Cloth	Vinyl	Leather							
L1B, L4B, L5B	L1-L, L2-L	★	★	-	Blue	-	★	-	★	-	-
L1R, L4R, L5R	L1-L, L2-L	★	★	-	Red	-	★	-	★	-	-
L1T, L4T, L5T	L1-L, L2-L	★	★	-	Tan	-	★	-	★	-	-
L1Q, L4Q	L1-L, L2-L	★	★	-	Turquoise	-	★	-	★	-	-
H1B, H4B, H5B	L1-H, L2-H	★	★	-	Blue	-	★	-	★	★	★
H1R, H4R, H5R	L1-H, L2-H	★	★	-	Red	-	★	-	★	★	★
H1T, H4T, H5T	L1-H, L2-H	★	★	-	Tan	-	★	-	★	★	★
H1Q, H4Q	L1-H, L2-H	★	★	-	Turquoise	-	★	-	★	★	★
P4B	L1-P, L2-P	-	★	-	Blue	-	-	-	-	★	★
P4X	L1-P, L2-P	-	★	-	Black	-	-	-	-	★	★
P4Y	L1-P, L2-P	-	★	-	Gold	-	-	-	-	★	★
P4R	L1-P, L2-P	-	★	-	Red	-	-	-	-	★	★
P4T	L1-P, L2-P	-	★	-	Tan	-	-	-	-	★	★

★ Indicates use as required.
B Indicates parts not listed in any previous parts book.

MyMopar.com

CODE	REMARKS	PER CAR	SED.	4D H.T	STA. WGN.	2D H.T	CV. CP.
	NOTE: RIGHT HAND AND LEFT HAND PARTS LISTED ON THE SAME LINE. Whenever right and left hand parts are identified by consecutive part numbers, they will be listed as in the following example: PANEL, Door Trim 3108-9V Interpreted, this indicates that Panel, right is Part No. 3108 V and Panel, left is Part No. 3109 V.						
23-76-9	BASE, Door and Quarter Arm Rest						
	L1-L, L2-L						
	(codes L1B, L4B, L5B)	1	*1208-9 AB4	---- ---	*1208-9 AB4		
	(codes L1Q, L4Q)	1	⊟1208-9 AQ4	---- ---	⊟1208-9 AQ4		
	(codes L1T, L4T, L5T)	1	*1208-9 VT6	---- ---	*1208-9 VT6		
	(code L5R)	1	*1208-9 AR5				
	(codes L1R, L4R)	1	*1208-9 AR5	---- ---	*1208-9 AR5		
	L1-H, L2-H, L1-P, L2-P						
	(codes H1B, H4B, H5B)	1	*1208-9 AB4	---- ---	*1208-9 AB4	*1208-9 AB4	
	(codes H1Q, H4Q)	1	⊟1208-9 AQ4	---- ---	⊟1208-9 AQ4	⊟1208-9 AQ4	
	(codes H1T, H4T, H5T)	1	*1208-9 VT6	---- ---	*1208-9 VT6	*1208-9 VT6	
	(codes H1R, H4R, H5R)	1	*1208-9 AR5	---- ---	*1208-9 AR5	*1208-9 AR5	
	(chrome)	1	---- ---	---- ---	---- ---	1208-9 VZ1	1208-9 VZ1
23-76-11	PAD, Front Door Arm Rest						
	L1-L, L2-L, L1-H, L2-H						
	(codes L1B, L4B, L5B, H1B, H4B, H5B)	1	*1216-7 AB4	---- ---	*1216-7 AB4	*1216-7 AB4	*1216-7 AB4
	(codes L1Q, L4Q, H1Q, H4Q)	1	*1216-7 AQ4	---- ---	*1216-7 AQ4	*1216-7 AQ4	*1216-7 AQ4
	(codes L1T, L4T, L5T, H1T H4T, H5T)	1	*1216-7 VT6	---- ---	*1216-7 VT6	*1216-7 VT6	*1216-7 VT6
	(codes L5R, H1R, H4R, H5R)	1	*1216-7 AR5	---- ---	*1216-7 AR5	*1216-7 AR5	*1216-7 AR5
	L1-P, L2-P						
	(code P4B)	1	---- ---	---- ---	---- ---	1222-3 AB4	1222-3 AB4
	(code P4X)	1	---- ---	---- ---	---- ---	1222-3 VX9	1222-3 VX9
	(code P4T)	1	---- ---	---- ---	---- ---	1222-3 VT6	1222-3 VT6
	(code P4R)	1	---- ---	---- ---	---- ---	1222-3 VR7	1222-3 VR7
	(code P4Y)	1	---- ---	---- ---	---- ---	*1222-3 AY3	*1222-3 AY3
23-76-16	NUT, Door and Quarter Arm Rest						
	Attaching						
	L1, L2						
	Rear	★	1280 134	---- ---	1280 134	1280 134	1280 134
23-76-63	PAD, Rear Door Arm Rest						
	L1, L2						
	(codes L1B, L4B, L5B, H1B, H4B, H5B)	1	*1214-5 AB4	---- ---	*1214-5 AB4		
	(codes L1Q, L4Q, H1Q, H4Q)	1	*1214-5 AQ4	---- ---	*1214-5 AQ4		
	(codes L1T, L4T, L5T, H1T, H4T, H5T)	1	*1214-5 VT6	---- ---	*1214-5 VT6		
	(codes L5R, H1R, H4R, H5R)	1	1214-5 AR8	---- ---	1214-5 AR8		
	(codes L1R, L4R)	1	1214-5 AR5	---- ---	1214-5 AR5		
23-76-76	PAD, Quarter Arm Rest						
	L1, L2 (2 D.)						
	(codes L1B, H1B)	1	*1214-5 AB4	---- ---	---- ---	*1214-5 AB4	
	(code P4B)	1	---- ---	---- ---	---- ---	1214-5 AB4	
	(codes L1Q, H1Q)	1	*1214-5 AQ4				
	(codes L1T, H1T)	1	*1214-5 VT6	---- ---	---- ---	*1214-5 VT6	
	(code L1R)	1	1214-5 AR5	---- ---	---- ---	1214-5 AR5	
	(code H1R)	1	1214-5 AR8	---- ---	---- ---	1214-5 AR8	
	(code P4R)	1	---- ---	---- ---	---- ---	1214-5 AR7	
	(code P4Y)	1	---- ---	---- ---	---- ---	1214-5 AW3	

★ Indicates use as required.
⊟ Indicates parts not listed in any previous parts book.
May 1965, Supersedes Sept. 4, 1964.

MyMopar.com

Printed in U.S.A.
Prices and specifications subject to change without notice.
Right and left part numbers are on same line, first number is right, second number is left.
* Indicates change or addition

CODE	REMARKS	PER CAR	SED.	4D H.T	STA. WGN.	2D H.T	CV. CP.
23-76-76	PAD, Quarter Arm Rest - Cont'd						
	L1-P, L2-P						
	(code P4R)	1	---- ---	---- ---	---- ---	1214-5 VR6	
	(code P4X)	1	---- ---	---- ---	---- ---	1214-5 VX9	
	(code P4T)	1	---- ---	---- ---	---- ---	1214-5 VT6	
23-78-2	BUTTON, Cushion and Back Tufting						
	L1-H, L2-H, L1-P, L2-P						
	(codes H4B, P4B)	★	*4102 AB4	---- ---	---- ---	*4102 AB4	*4102 AB4
	(code P4R)	★	---- ---	---- ---	---- ---	4102 AR7	4102 AR7
	(codes H4T, P4T)	★	*4102 AT6	---- ---	---- ---	*4102 AT6	*4102 AT6
	(code P4X)	★	---- ---	---- ---	---- ---	4102 AX9	4102 AX9
	(code P4Y)	★	---- ---	---- ---	---- ---	4102 AW3	4102 AW3
	(code H4R)	★	⊟4102 AR5				
23-79-3	CARPET, Front Floor						
	L1-L, L2-L, L1-H, L2-H						
	(codes L1B, L4B, L5B, H1B, H4B, H5B)	1	1764 AB8	---- ---	1764 AB8	1764 AB8	1764 AB8
	(codes L1R, L4R, L5R)	1	1764 AR7	---- ---	1764 AR7	1764 AR7	1764 AR7
	(codes L1Q, L4Q, H1Q, H4Q)	1	1764 AQ8	---- ---	1764 AQ8	1764 AQ8	1764 AQ8
	(codes L1T, L4T, L5T, H1T, H4T, H5T)	1	1764 AT8	---- ---	1764 AT8	1764 AT8	1764 AT8
	(4 speed trans. floor shift)						
	(codes L1B, L4B, L5B, H1B, H4B, H5B)	1	1770 AB8	---- ---	1770 AB8	1770 AB8	1770 AB8
	(codes L1R, L4R, L5B, H1R, H4R, H5R)	1	1770 AR7	---- ---	---- ---	1770 AR7	1770 AR7
	(codes L1T, L4T, L5T, H1T, H4T, H5T)	1	1770 AT8	---- ---	1770 AT8	1770 AT8	1770 AT8
	(codes L1Q, L4Q, H1Q, H4Q)	1	1770 AQ8	---- ---	1770 AQ8	1770 AQ8	1770 AQ8
	L1-P, L2-P						
	(auto. trans. w/console)						
	(code P4B)	1	---- ---	---- ---	---- ---	1759 AB8	1759 AB8
	(code P4T)	1	---- ---	---- ---	---- ---	1759 AT8	1759 AT8
	(code P4R)	1	---- ---	---- ---	---- ---	1759 AR7	1759 AR7
	(code P4X)	1	---- ---	---- ---	---- ---	1759 AX8	1759 AX8
	(code P4Y)	1	---- ---	---- ---	---- ---	1759 AY3	1759 AY3
	L1-P, L2-P						
	(bucket seats, auto. trans. w/o console)						
	(code P4B)	1	---- ---	---- ---	---- ---	1766 AB8	1766 AB8
	(code P4T)	1	---- ---	---- ---	---- ---	1766 AT8	1766 AT8
	(code P4R)	1	---- ---	---- ---	---- ---	1766 AR7	1766 AR7
	(code P4Y)	1	---- ---	---- ---	---- ---	1766 AY3	1766 AY3
	(code P4X)	1	---- ---	---- ---	---- ---	1766 AX8	1766 AX8
	L1-P, L2-P						
	(4 speed manual, floor shift)						
	(code P4B)	1	---- ---	---- ---	---- ---	1760 AB8	1760 AB8
	(code P4T)	1	---- ---	---- ---	---- ---	1760 AT8	1760 AT8
	(code P4R)	1	---- ---	---- ---	---- ---	1760 AR6	1760 AR6
	(code P4X)	1	---- ---	---- ---	---- ---	1760 AX8	1760 AX8
	(code P4Y)	1	---- ---	---- ---	---- ---	1760 AY3	1760 AY3
23-79-4	PLATE, Front Floor Accelerator Pedal Scuff						
	L1, L2	1	2499 135	---- ---	2499 135	2499 135	2499 135

★ Indicates use as required.
⊟ Indicates parts not listed in any previous parts book.
Right and left part numbers are on same line, first number is right, second number is left.
* Indicates change or addition.

Printed in U.S.A.
Prices and specifications subject to change without notice.
May 1965, Supersedes Sept. 4, 1964.

MyMopar.com

CODE	REMARKS	PER CAR	SED.	4D H.T	STA. WGN.	2D H.T	CV. CP.
23-79-5	WASHER, Scuff Plate Attaching L1-H, L2-H	1	*2572 486				
23-79-33	CARPET, Rear Floor L1-L, L2-L, L1-H, L2-H						
	(codes L1B, L5B, H1B, H4B, H5B)	1	1707 AB8	---- ---	---- ---	1707 AB8	1708 AB8
	(codes L1Q, H1Q)	1	1707 AQ8	---- ---	---- ---	1707 AQ8	1708 AQ8
	(codes L1T, L5T, H1T, H4T, H5T)	1	1707 AT8	---- ---	---- ---	1707 AT8	1708 AT8
	(codes L1R, L5R, H1R, H4R, H5R)	1	1707 AR7	---- ---	---- ---	1707 AR7	1708 AR7
	(codes L4B, H4B)	1	---- ---	---- ---	1709 AB8		
	(codes L4Q, H4Q)	1	---- ---	---- ---	1709 AQ8		
	(codes L4T, H4T)	1	---- ---	---- ---	1709 AT8		
	(codes L4R, H4R)	1	---- ---	---- ---	1709 AR7		
	L1, L2 (axle kick-up front trim panel)	1	---- ---	---- ---	4314 VX9		
	L1-P, L2-P						
	(code P4B)	1	---- ---	---- ---	---- ---	1713 AB8	1714 AB8
	(code P4T)	1	---- ---	---- ---	---- ---	1713 AT8	1714 AT8
	(code P4R)	1	---- ---	---- ---	---- ---	1713 AR7	1714 AR7
	(code P4X)	1	---- ---	---- ---	---- ---	1713 AX8	1714 AX8
	(code P4Y)	1	---- ---	---- ---	---- ---	1713 AY3	1714 AY3
	L1-H, L2-H						
	(code H4B)	1	---- ---	---- ---	---- ---	---- ---	1708 AB8
	(code H4Q)	1	---- ---	---- ---	---- ---	---- ---	1708 AQ8
	(code H4R)	1	---- ---	---- ---	---- ---	---- ---	1708 AR7
	(code H4T)	1	---- ---	---- ---	---- ---	---- ---	1708 AT8
23-82-30	HOOK, Coat Hanger L1, L2	2	2581 908	---- ---	2581 908	2581 908	
23-82-39	BRACKET, Coat Hook Support L1, L2	2	2481 175	---- ---	2481 175	2481 175	
23-84-3	PAD, Instrument Panel Trim L1, L2						
	(codes L1B, L4B, L5B, H1B, H4B, H5B, H8B, P5B)	1	*4263 AB6	---- ---	*4263 AB6	*4263 AB6	*4263 AB6
	(codes L1Q, L4Q, H1Q, H4Q)	1	4263 AQ6	---- ---	4263 AQ6	4263 AQ6	4263 AQ6
	(codes L1R, L4R, L5R, H1R, H4R, H8R, P4R, H5R)	1	*4263 AR7	---- ---	*4263 AR7	*4263 AR7	*4263 AR7
	(codes L1T, L4T, L5T, H1T, H4T, H5T, H8T, P4T)	1	*4263 AT6	---- ---	*4263 AT6	*4263 AT6	*4263 AT6
	(code P4Y)	1	---- ---	---- ---	---- ---	4263 AY6	4263 AY6
	(code P4X)	1	---- ---	---- ---	---- ---	4263 AX8	4263 AX8
23-86-2	COVER, Roof Outside L1-P, L2-P						
	(white)	1	---- ---	---- ---	---- ---	7334 AW1	
	(black)	1	---- ---	---- ---	---- ---	7334 AX8	
23-86-3	HEADLINING and LISTINGS L1, L2						
	(codes L1B, L4B, L5B, H1B, H4B, P4B)	1	7115 AB3	---- ---	7102 AB3	7115 AB3	
	(codes L1Q, H1Q, L4Q, H4Q)	1	7115 AQ3	---- ---	7102 AQ3	7115 AQ3	
	(codes L1R, L4R, L5R, H1R, H4R, H5R, P4R)	1	7115 AW2	---- ---	7102 AW2	7115 AW2	

★ Indicates use as required.
B Indicates parts not listed in any previous parts book.

MyMopar.com

Printed in U.S.A.
Prices and specifications subject to change without notice.
Right and left part numbers are on same line, first number is right, second number is left.
* Indicates change or addition.

CODE	REMARKS	PER CAR	SED.	4D H.T	STA. WGN.	2D H.T	CV. CP.
23-86-3	HEADLINING and LISTINGS - Cont'd						
	L1, L2						
	(codes L1T, L4T, L5T, H1T, H4T, H5T, P4T)	1	7115 AT3	---- ---	7102 AT3	7115 AT3	
	(code P4Y)	1	---- ---	---- ---	---- ---	*7115 AW2	
	(code P4X)	1	---- ---	---- ---	---- ---	7115 AX9	
23-86-8	RETAINER, Roof Outside Cover						
	L1-P, L2-P						
	Side	1	---- ---	---- ---	---- ---	2573 074-5	
	Front	1	---- ---	---- ---	---- ---	2573 070	
	Rear	1	---- ---	---- ---	---- ---	2573 072	
23-86-10	SUPPORT, Roof Bow						
	L1, L2						
		2	2242 504	---- ---	---- ---	---- ---	2242 504
		3	---- ---	---- ---	2243 251		
23-86-19	STRIP, Headlining Retaining						
	L1, L2						
	Front	1	2242 996-7	---- ---	2242 996-7		
	Rear	1	2244 348-9	---- ---	2423 638-9	2244 346-7	
	Screw (attaching)	2	---- ---	---- ---	125 978		
	Screw (side attaching)	18	---- ---	---- ---	---- ---	6023 938	
	Screw (sealing)	★	---- ---	---- ---	---- ---	6024 568	
	Fastener	★	---- ---	---- ---	---- ---	6000 922	
23-86-31	PROTECTOR, Roof Panel Cover						
	Rear Retaining Screw						
	L1-P, L2-P	7	---- ---	---- ---	---- ---	2483 767	
23-91-6	PANEL, Cowl Trim						
	L1, L2 (paint as required)						
		1	1402-3 VX8	---- ---	1402-3 VX8	1402-3 VX8	1402-3 VX8
23-92-5	PANEL, Door Trim						
	L1, L2 (2 D.)						
	(code L1B)	1	3150-1 ABB				
	(code L1Q)	1	3150-1 AQQ				
	(code L1R)	1	3150-1 ARR				
	(code L1T)	1	3150-1 ATT				
	(codes H1B, H4B)	1	3154-5 ABB	---- ---	---- ---	3154-5 ABB	3154-5 ABB
	(codes H1Q, H4Q)	1	3154-5 AQQ	---- ---	---- ---	3154-5 AQQ	3154-5 AQQ
	(codes H1R, H4R)	1	*3154-5 AOR	---- ---	---- ---	*3154-5 AOR	*3154-5 AOR
	(codes H1T, H4T)	1	3154-5 ATT	---- ---	---- ---	3154-5 ATT	3154-5 ATT
	L1, L2 (4 D.)						
	(codes L1B, L4B) Front	1	3152-3 ABB	---- ---	3152-3 ABB		
	Rear	1	3234-5 ABB	---- ---	3234-5 ABB		
	(codes L1Q, L4Q) Front	1	3152-3 AQQ	---- ---	3152-3 AQQ		
	Rear	1	3234-5 AQQ	---- ---	3234-5 AQQ		
	(codes L1R, L4R) Front	1	3152-3 ARR	---- ---	3152-3 ARR		
	Rear	1	3234-5 ARR	---- ---	3234-5 ARR		
	(codes L1T, L4T) Front	1	3152-3 ATT	---- ---	3152-3 ATT		
	Rear	1	3234-5 ATT	---- ---	3234-5 ATT		
	(codes H1B, H4B) Front	1	3120-1 ABB	---- ---	3120-1 ABB		
	Rear	1	3216-7 ABB	---- ---	3216-7 ABB		
	(codes H1Q, H4Q) Front	1	3120-1 AOQ	---- ---	3120-1 AOQ		
	Rear	1	*3216-7 AOQ	---- ---	*3216-7 AOQ		
	(codes H1R, H4R) Front	1	3120-1 AOR	---- ---	3120-1 AOR		
	Rear	1	3216-7 ARR	---- ---	3216-7 ARR		
	(codes H1T, H4T) Front	1	3120-1 ATT	---- ---	3120-1 ATT		
	Rear	1	3216-7 ATT	---- ---	3216-7 ATT		

★ Indicates use as required.
⊟ Indicates parts not listed in any previous parts book.
Right and left part numbers are on same line, first number is right, second number is left.
* Indicates change or addition.

MyMopar.com

Printed in U.S.A.
Prices and specifications subject to change without notice.
May 1965, Supersedes Sept. 4, 1964.

CODE	REMARKS	PER CAR	SED.	4D H.T	STA. WGN.	2D H.T	CV. CP.
23-92-5	PANEL, Door Trim - Cont'd						
	L1, L2 (4 D.)						
	(codes L5B, H5B) Front	1	3120-1 ABB				
	Rear	1	3216-7 ABB				
	(codes L5B, H5R) Front	1	3120-1 AOR				
	Rear	1	3216-7 ARR				
	(codes L5T, H5T) Front	1	3120-1 ATT				
	Rear	1	3216-7 ATT				
	L1-P, L2-P (w/reflective tape moulding insert)						
	(code P4B)	1	---- ---	---- ---	---- ---	3160-1 ABB	3160-1 ABB
	(code P4R)	1	---- ---	---- ---	---- ---	3160-1 ARR	3160-1 ARR
	(code P4T)	1	---- ---	---- ---	---- ---	3160-1 ATT	3160-1 ATT
	(code P4Y)	1	---- ---	---- ---	---- ---	3160-1 AYW	3160-1 AYW
	(code P4X) Rt.	1	---- ---	---- ---	---- ---	*3160 AXX	*3160 AXX
	Lt.	1	---- ---	---- ---	---- ---	*3194 AXX	*3194 AXX
	(w/o reflective tape moulding insert)						
	(code P4B)	1	---- ---	---- ---	---- ---	3194-5 ABB	3194-5 ABB
	(code P4R)	1	---- ---	---- ---	---- ---	3194-5 AOR	3194-5 AOR
	(code P4T)	1	---- ---	---- ---	---- ---	3194-5 ATT	3194-5 ATT
	(code P4Y)	1	---- ---	---- ---	---- ---	3194-5 AYW	3194-5 AYW
	(code P4X)	1	---- ---	---- ---	---- ---	3194-5 AXX	3194-5 AXX
	Fastener	★	6000 365	---- ---	6000 365	6000 365	6000 365
23-96-3	PANEL, Luggage Compartment Front Lining						
	L1, L2	1	---- ---	---- ---	---- ---	2419 639	2440 956
	Screw (attaching)	2	---- ---	---- ---	---- ---	---- ---	6024 229
	Clip (to seat back support)	2	---- ---	---- ---	---- ---	---- ---	6000 903
	PANEL, Rear Compartment Security (use w/Barracuda formula S package)	1	---- ---	---- ---	---- ---	2603 464	
	(45 3/4" long - no cutout)	1	---- ---	---- ---	---- ---	2602 109	
	(55 1/4" long - no cutout)	1	---- ---	---- ---	---- ---	2528 894	
23-99-4	COVER, Center Pillar						
	(codes L4B, H4B)	1	---- ---	---- ---	2018-9 VB6		
	(codes L4Q, H4Q)	1	---- ---	---- ---	2018-9 VQ6		
	(codes L4R, H4R)	1	---- ---	---- ---	2018-9 AR7		
	(codes L4T, H4T)	1	---- ---	---- ---	2018-9 VT6		
23-99-38	PANEL, Rear Upper Pillar Reinf. Trim Panel						
	L1, L2						
	(codes L4B, H1B, H4B)	1	---- ---	---- ---	2016-7 VB6		
	(codes H1Q, H4Q, L4Q)	1	---- ---	---- ---	2016-7 VQ6		
	(codes L4T, H1T, H4T)	1	---- ---	---- ---	2016-7 VT6		
23-101-3	PANEL, Rear Quarter Trim						
	L1-L, L2-L (2 D.)						
	(code L1B)	1	3330-1 ABB				
	(code L1Q)	1	3330-1 AQQ				
	(code L1R)	1	3330-1 ARR				
	(code L1T)	1	3330-1 ATT				
	L1-H, L2-H (2 D.)						
	(code H1B)	1	3332-3 ABB	---- ---	---- ---	3332-3 ABB	
	(code H1Q)	1	3332-3 AQQ	---- ---	---- ---	3332-3 AQQ	
	(code H1R)	1	3332-3 AOR	---- ---	---- ---	3332-3 AOR	
	(code H1T)	1	3332-3 ATT	---- ---	---- ---	3332-3 ATT	

★ Indicates use as required.
B Indicates parts not listed in any previous parts book.

Printed in U.S.A.
Prices and specifications subject to change without notice.
Right and left part numbers are on same line, first number is right, second number is left.
* Indicates change or addition.

MyMopar.com

CODE	REMARKS	PER CAR	SED.	4D H.T	STA. WGN.	2D H.T	CV. CP.
23-101-3	PANEL, Rear Quarter Trim - Cont'd						
	L1-L, L2-L, L1-H, L2-H (4 D.)						
	(codes L1B, L5B, H1B, H4B, H5B)	1	7552-3 AB4				
	(codes L1Q, H1Q)	1	7552-3 AQ4				
	(codes L1R, L5R, H1R, H4R, H5R)	1	7552-3 AR5				
	(upper)						
	(codes L4B, H1B, H4B)	1	---- ---	---- ---	2018-9 VB6		
	(codes L4Q, H1Q, H4Q)	1	---- ---	---- ---	2018-9 VQ6		
	(codes L4R, H4R)	1	---- ---	---- ---	2018-9 AR7		
	(codes L4T, H1T, H4T)	1	---- ---	---- ---	2018-9 VT6		
	(lower)	1	2054-5 AT6	---- ---	2012-3 VT8		
	L1-P, L2-P						
	(w/reflective tape moulding insert)						
	(code P4B)	1	---- ---	---- ---	---- ---	3336-7 ABB	3338-9 ABB
	(code P4R)	1	---- ---	---- ---	---- ---	3336-7 AOR	3338-9 AOR
	(code P4T)	1	---- ---	---- ---	---- ---	3336-7 ATT	3338-9 ATT
	(code P4Y)	1	---- ---	---- ---	---- ---	3336-7 AYW	3338-9 AYW
	(code P4X)	1	---- ---	---- ---	---- ---	3336-7 AXX	3338-9 AXX
	(w/o reflective tape moulding insert)						
	(code P4B)	1	---- ---	---- ---	---- ---	3474-5 ABB	3476-7 ABB
	(code P4R)	1	---- ---	---- ---	---- ---	3474-5 AOR	3476-7 AOR
	(code P4T)	1	---- ---	---- ---	---- ---	3474-5 ATT	3476-7 ATT
	(code P4X)	1	---- ---	---- ---	---- ---	3474-5 AYW	3476-7 AYW
	(code P4Y)	1	---- ---	---- ---	---- ---	3474-5 AXX	3476-7 AXX
	L1-H, L2-H						
	(code H4B)	1	---- ---	---- ---	---- ---	---- ---	3334-5 ABB
	(code H4Q)	1	---- ---	---- ---	---- ---	---- ---	3334-5 AQQ
	(code H4R)	1	---- ---	---- ---	---- ---	---- ---	3334-5 AOR
	(code H4T)	1	---- ---	---- ---	---- ---	---- ---	3334-5 ATT
	Screw (front attaching)	2	6023 247	---- ---	---- ---	6023 247	
	Screw and Washer	★	6023 381	---- ---	6023 381		
	Fastener	★	6000 365	---- ---	6000 365	6000 365	6000 365
23-102-3	PANEL, Shelf Trim						
	L1, L2 (paint as required)	1	1317 AT6	---- ---	---- ---	1317 AT6	
	Clip	2	6000 903	---- ---	---- ---	6000 903	
23-103-3	PANEL, Visor Trim						
	L1, L2						
	(codes L1B, L4B, L5B, H1B, H4B, H5B)	2	1101 AB3	---- ---	1101 AB3	1101 AB3	
	(codes L1Q, L4Q, H1Q, H4Q)	2	1101 AQ3	---- ---	1101 AQ3	1101 AQ3	
	(codes L1R, L4R, L5R, H1R, H4R, H5R)	2	1101 AW2	---- ---	1101 AW2	1101 AW2	
	(codes L1T, L4T, L5T, H1T, H4T, H5T)	2	1101 AT3	---- ---	1101 AT3	1101 AT3	
	L1-P, L2-P						
	(code P4B)	2	---- ---	---- ---	---- ---	1102 AB3	
	(code P4R)	2	---- ---	---- ---	---- ---	*1102 BW2	
	UP TO Serial No. 100196						
	(code P4Y)	2	---- ---	---- ---	---- ---	1102 AY3	
	AFTER Serial No. 100196						
	(code P4Y)	2	---- ---	---- ---	---- ---	*1102 BW2	
	(code P4T)	2	---- ---	---- ---	---- ---	*1102 BX9	
	(code P4T)	2	---- ---	---- ---	---- ---	1102 AT3	

★ Indicates use as required.
⊟ Indicates parts not listed in any previous parts book.
Right and left part numbers are on same line, first number is right, second number is left.
* Indicates change or addition.

MyMopar.com

CODE	REMARKS	PER CAR	SED.	4D H.T	STA. WGN.	2D H.T	CV. CP.
23-103-3	PANEL, Visor Trim - Cont'd						
	L1-H, L2-H, L1-P, L2-P						
	(codes H4B, P4B)	2	---- ---	---- ---	---- ---	---- ---	1100 AB4
	(codes H4T, P4T)	2	---- ---	---- ---	---- ---	---- ---	1100 VT6
	(code H4Q)	2	---- ---	---- ---	---- ---	---- ---	1100 AQ4
	(code P4X)	2	---- ---	---- ---	---- ---	---- ---	1100 VX9
	(code H4R)	2	---- ---	---- ---	---- ---	---- ---	1100 AR5
	(code P4R)	2	---- ---	---- ---	---- ---	---- ---	1100 AR7
	(code P4Y)	2	---- ---	---- ---	---- ---	---- ---	1100 AW3
23-103-10	ARM and BRACKET, Visor						
	L1, L2						
	(chrome)	1	2292 580-1	---- ---	2292 580-1	2292 580-1	
	Washer (tension spring)	2	---- ---	---- ---	---- ---	6000 106	
	Screw (bracket attaching)	6	---- ---	---- ---	---- ---	187 709	
23-103-48	SUPPORT, Visor Inner						
	L1, L2	2	---- ---	---- ---	---- ---	---- ---	*2162 628
23-108-4	CUSHION, Front Seat						
	L1-L, L2-L (2 D.)						
	(std. springs w/o airfoam pad)						
	(code L1B)	1	5330 A1B				
	(code L1Q)	1	5330 A1Q				
	(code L1R)	1	5330 A1R				
	(code L1T)	1	5330 A1T				
	(std. springs w/airfoam pad)						
	(code L1B)	1	5331 A1B				
	(code L1Q)	1	5331 A1Q				
	(code L1R)	1	5331 A1R				
	(code L1T)	1	5331 A1T				
	(heavy duty springs w/o airfoam pad)						
	(code L1B)	1	5332 A1B				
	(code L1Q)	1	5332 A1Q				
	(code L1R)	1	5332 A1R				
	(code L1T)	1	5332 A1T				
	(heavy duty springs w/airfoam pad)						
	(code L1B)	1	5333 A1B				
	(code L1Q)	1	5333 A1Q				
	(code L1R)	1	5333 A1R				
	(code L1T)	1	5333 A1T				
	L1-H, L2-H (2 D.)						
	(std. springs w/o airfoam pad)						
	(code H1B)	1	5336 A1B	---- ---	---- ---	5336 A1B	
	(code H1Q)	1	5336 A1Q	---- ---	---- ---	5336 A1Q	
	(code H1R)	1	5336 A1R	---- ---	---- ---	5336 A1R	
	(code H1T)	1	5336 A1T	---- ---	---- ---	5336 A1T	
	(std. springs w/airfoam pad)						
	(code H1B)	1	5337 A1B	---- ---	---- ---	5337 A1B	
	(code H1Q)	1	5337 A1Q	---- ---	---- ---	5337 A1Q	
	(code H1R)	1	5337 A1R	---- ---	---- ---	5337 A1R	
	(code H1T)	1	5337 A1T	---- ---	---- ---	5337 A1T	
	L1-L, I.2-L (4D.)						
	(std. springs w/o airfoam pad)						
	(code L1B)	1	5326 A1B				
	(code L1Q)	1	5326 A1Q				
	(code L1R)	1	5326 A1R				
	(code L1T)	1	5326 A1T				

★ Indicates use as required.
B Indicates parts not listed in any previous parts book.
May 1965, Supersedes Sept. 4, 1964.

MyMopar.com

Printed in U.S.A.
Prices and specifications subject to change without notice.
Right and left part numbers are on same line, first number is right, second number is left.
* Indicates change or addition.

CODE	REMARKS	PER CAR	SED.	4D H.T	STA. WGN.	2D H.T	CV. CP.
23-108-4	CUSHION, Front Seat - Cont'd						
	L1-L, L2-L (4 D.)						
	(std. springs w/airfoam pad)						
	(code L1B)	1	5327 A1B				
	(code L1Q)	1	5327 A1Q				
	(code L1R)	1	5327 A1R				
	(code L1T)	1	5327 A1T				
	(heavy duty springs w/o airfoam pad)						
	(code L1B)	1	5328 A1B				
	(code L1Q)	1	5328 A1Q				
	(code L1R)	1	5328 A1R				
	(code L1T)	1	5328 A1T				
	(code L5B)	1	7231 A5B				
	(code L5R)	1	7231 A5R				
	(code L5T)	1	7231 A5T				
	(heavy duty springs w/airfoam pad)						
	(code L1B)	1	5329 A1B				
	(code L1Q)	1	5329 A1Q				
	(code L1R)	1	5329 A1R				
	(code L1T)	1	5329 A1T				
	(code L5B)	1	7232 A5B				
	(code L5R)	1	7232 A5R				
	(code L5T)	1	7232 A5T				
	L1, L2 (4 D.)						
	(std. springs w/o airfoam pad)						
	(code H1B)	1	5334 A1B				
	(code H1Q)	1	5334 A1Q				
	(code H1R)	1	5334 A1R				
	(code H1T)	1	5334 A1T				
	(code L5B)	1	7229 A5B				
	(code L5R)	1	7229 A5R				
	(code L5T)	1	7229 A5T				
	(std. springs w/airfoam pad)						
	(code H1B)	1	5335 A1B				
	(code H1Q)	1	5335 A1Q				
	(code H1R)	1	5335 A1R				
	(code H1T)	1	5335 A1T				
	(code L5B)	1	7230 A5B				
	(code L5R)	1	7230 A5R				
	(code L5T)	1	7230 A5T				
	L1-H, L2-H (4 D.)						
	(std. springs w/o airfoam pad)						
	(code H4B)	1	5341 A4B	---- ---	5341 A4B	---- ---	5339 A4B
	(code H4Q)	1	5341 A4Q	---- ---	5341 A4Q	---- ---	5339 A4Q
	(code H4R)	1	5341 A4R	---- ---	5341 A4R	---- ---	5339 A4R
	(code H4T)	1	5341 A4T	---- ---	5341 A4T	---- ---	5339 A4T
	(std. springs w/airfoam pad)						
	(code H4B)	1	5342 A4B	---- ---	5342 A4B	---- ---	5340 A4B
	(code H4Q)	1	5342 A4Q	---- ---	5342 A4Q	---- ---	5340 A4Q
	(code H4R)	1	5342 A4R	---- ---	5342 A4R	---- ---	5340 A4R
	(code H4T)	1	5342 A4T	---- ---	5342 A4T	---- ---	5340 A4T
	L1-L, L2-L						
	(std. springs w/o airfoam pad)						
	(code L4B)	1	---- ---	---- ---	5343 A4B		
	(code L4Q)	1	---- ---	---- ---	5343 A4Q		
	(code L4R)	1	---- ---	---- ---	5343 A4R		
	(code L4T)	1	---- ---	---- ---	5343 A4T		

● Indicates use as required.
⊟ Indicates parts not listed in any previous parts book.
Right and left part numbers are on same line, first number is right, second number is left.
* Indicates change or addition.

MyMopar.com

Printed in U.S.A.
Prices and specifications subject to change without notice.
May 1965, Supersedes Sept. 4, 1964.

CODE	REMARKS	PER CAR	SED.	4D H.T	STA. WGN.	2D H.T	CV. CP.
23-108-4	CUSHION, Front Seat - Cont'd						
	L1-L, L2-L						
	(std. springs w/airfoam pad)						
	(code L4B)	1	---- ---	---- ---	5344 A4B		
	(code L4Q)	1	---- ---	---- ---	5344 A4Q		
	(code L4R)	1	---- ---	---- ---	5344 A4R		
	(code L4T)	1	---- ---	---- ---	5344 A4T		
	(heavy duty springs w/o airfoam pad)						
	(code L4B)	1	---- ---	---- ---	5345 A4B		
	(code L4Q)	1	---- ---	---- ---	5345 A4Q		
	(code L4R)	1	---- ---	---- ---	5345 A4R		
	(code L4T)	1	---- ---	---- ---	5345 A4T		
	(heavy duty springs w/airfoam pad)						
	(code L4B)	1	---- ---	---- ---	5346 A4B		
	(code L4Q)	1	---- ---	---- ---	5346 A4Q		
	(code L4R)	1	---- ---	---- ---	5346 A4R		
	(code L4T)	1	---- ---	---- ---	5346 A4T		
	L1-P, L2-P						
	(code P4B)	1	---- ---	---- ---	---- ---	5348-9 A4B	5348-9 A4B
	(code P4R)	1	---- ---	---- ---	---- ---	5348-9 A4R	5348-9 A4R
	(code P4T)	1	---- ---	---- ---	---- ---	5348-9 A4T	5348-9 A4T
	(code P4X)	1	--------	---- ---	---- ---	5348-9 A4X	5348-9 A4X
	(code P4Y)	1	---- ---	---- ---	---- ---	5348-9 A4Y	5348-9 A4Y
23-108-5	COVER, Front Seat Cushion						
	L1-L, L2-L (2 D.)						
	(code L1B)	1	5813 A1B				
	(code L1Q)	1	5813 A1Q				
	(code L1R)	1	5813 A1R				
	(code L1T)	1	5813 A1T				
	L1-H, L2-H (2 D.)						
	(code H1B)	1	5815 A1B	---- ---	---- ---	5815 A1B	
	(code H1Q)	1	5815 A1Q	---- ---	---- ---	5815 A1Q	
	(code H1R)	1	5815 A1R	---- ---	---- ---	5815 A1R	
	(code H1T)	1	5815 A1T	---- ---	---- ---	5815 A1T	
	L1-L, L2-L (4 D.)						
	(code L1B)	1	5812 A1B				
	(code L1Q)	1	5812 A1Q				
	(code L1R)	1	5812 A1R				
	(code L1T)	1	5812 A1T				
	(code L5B)	1	5820 A5B				
	(code L5R)	1	5820 A5R				
	(code L5T)	1	5820 A5T				
	L1-H, L2-H (4 D.)						
	(code H1B)	1	5814 A1B				
	(code H1Q)	1	5814 A1Q				
	(code H1R)	1	5814 A1R				
	(code H1T)	1	5814 A1T				
	(code H4B)	1	5817 A4B	----- ---	5817 A4B	---- ---	5816 A4B
	(code H4Q)	1	5817 A4Q	---- ---	5817 A4Q	---- ---	5816 A4Q
	(code H4R)	1	5817 A4R	---- ---	5817 A4R	---- ---	5816 A4R
	(code H4T)	1	5817 A4T	---- ---	5817 A4T	---- ---	5816 A4T
	(code H5B)	1	5820 A5B				
	(code H5R)	1	5820 A5R				
	(code H5T)	1	5820 A5T				
	L1-L, L2-L						
	(code L4B)	1	---- ---	---- ---	5818 A4B		
	(code L4Q)	1	---- ---	---- ---	5818 A4Q		
	(code L4R)	1	---- ---	---- ---	5818 A4R		
	(code L4T)	1	---- ---	---- ---	5818 A4T		

★ Indicates use as required.
B Indicates parts not listed in any previous parts book.
May 1965, Supersedes Sept. 4, 1964.

Printed in U.S.A.
Prices and specifications subject to change without notice.
Right and left part numbers are on same line, first number is right, second number is left.
* Indicates change or addition.

MyMopar.com

CODE	REMARKS	PER CAR	SED.	4D H.T	STA. WGN.	2D H.T	CV. CP.
23-108-5	COVER, Front Seat Cushion - Cont'd						
	L1-H, L2-H						
	(code H8B)	1	*5819 A4B				
	(code H8T)	1	*5819 A4T				
	(code H8R)	1	⊟5819 A8R				
	L1-P, L2-P						
	(code P4B)	1	---- ---	---- ---	---- ---	5819 A4B	5819 A4B
	(code P4T)	1	---- ---	---- ---	---- ---	5819 A4T	5819 A4T
	(code P4R)	1	---- ---	---- ---	---- ---	5819 A4R	5819 A4R
	(code P4X)	1	---- ---	---- ---	---- ---	5819 A4X	5819 A4X
	(code P4Y)	1	---- ---	---- ---	---- ---	5819 A4Y	5819 A4Y
23-108-12	BACK, Front Seat						
	L1-L, L2-L (2 D.)						
	(std. springs)						
	(code L1B)	1	5528-9 A1B				
	(code L1Q)	1	5528-9 A1Q				
	(code L1R)	1	5528-9 A1R				
	(code L1T)	1	5528-9 A1T				
	(heavy duty springs)						
	(code L1B)	1	5530-1 A1B				
	(code L1Q)	1	5530-1 A1Q				
	(code L1R)	1	5530-1 A1R				
	(code L1T)	1	5530-1 A1T				
	(code H1B)	1	5532-3 A1B	---- ---	---- ---	5532-3 A1B	
	(code H1Q)	1	5532-3 A1Q	---- ---	---- ---	5532-3 A1Q	
	(code H1R)	1	5532-3 A1R	---- ---	---- ---	5532-3 A1R	
	(code H1T)	1	5532-3 A1T	---- ---	---- ---	5532-3 A1T	
	Push-Nut	2	6024 203	---- ---	---- ---	6024 203	
	L1-L, L2-L (4 D.)						
	(std. springs)						
	(code L1B)	1	5525 A1B				
	(code L1Q)	1	5525 A1Q				
	(code L1R)	1	5525 A1R				
	(code L1T)	1	5525 A1T				
	(heavy duty springs)						
	(code L1B)	1	5526 A1B				
	(code L1Q)	1	5526 A1Q				
	(code L1R)	1	5526 A1R				
	(code L1T)	1	5526 A1T				
	(code L5B)	1	5541 A5B				
	(code L5R)	1	5541 A5R				
	(code L5T)	1	5541 A5T				
	(std. springs)						
	(code L4B)	1	---- ---	---- ---	5537 A4B		
	(code L4Q)	1	---- ---	---- ---	5537 A4Q		
	(code L4R)	1	---- ---	---- ---	5537 A4R		
	(code L4T)	1	---- ---	---- ---	5537 A4T		
	(heavy duty springs)						
	(code L4B)	1	---- ---	---- ---	5538 A4B		
	(code L4Q)	1	---- ---	---- ---	5538 A4Q		
	(code L4R)	1	---- ---	---- ---	5538 A4R		
	(code L4T)	1	---- ---	---- ---	5538 A4T		
	L1-H, L2-H						
	(code H1B)	1	5527 A1B				
	(code H1Q)	1	5527 A1Q				
	(code H1R)	1	5527 A1R				
	(code H1T)	1	5527 A1T				
	(code H4B)	1	5536 A4B	---- ---	5536 A4B	---- ---	5534-5 A4B
	(code H4Q)	1	---- ---	---- ---	5536 A4Q	---- ---	5534-5 A4Q
	(code H4R)	1	5536 A4R	---- ---	5536 A4R	---- ---	5534-5 A4R

★ Indicates use as required.
⊟ Indicates parts not listed in any previous parts book.
Right and left part numbers are on same line, first number is right, second number is left.
• Indicates change or addition.

MyMopar.com

Printed in U.S.A.
Prices and specifications subject to change without notice.
May 1965, Supersedes Sept. 4, 1964.

CODE	REMARKS	PER CAR	SED.	4D H.T	STA. WGN.	2D H.T	CV. CP.
23-108-12	BACK, Front Seat - Cont'd						
	L1-H, L2-H						
	(code H4T)	1	5536 A4T	---- ---	5536 A4T	---- ---	5534-5 A4T
	(code H5B)	1	5541 A5B				
	(code H5R)	1	5541 A5R				
	(code H5T)	1	5541 A5T				
	Push Nut (back to cushion)	2	6024 203	---- ---	---- ---	6024 203	6024 203
	Nut (spring attaching)	6	---- ---	---- ---	---- ---	6000 234	
23-108-15	SPRING and COVER, Front Seat Back						
	L1-P, L2-P						
	(code P4B)	2	---- ---	---- ---	---- ---	5713 A4B	5713 A4B
	(code P4R)	2	---- ---	---- ---	---- ---	5713 A4R	5713 A4R
	(code P4T)	2	---- ---	---- ---	---- ---	5713 A4T	5713 A4T
	(code P4X)	2	---- ---	---- ---	---- ---	5713 A4X	5713 A4X
	(code P4Y)	2	---- ---	---- ---	---- ---	5713 A4Y	5713 A4Y
23-108-16	COVER, Front Seat Back						
	L1-L, L2-L (2 D.)						
	(code L1B)	1	5928-9 A1B				
	(code L1Q)	1	5928-9 A1Q				
	(code L1R)	1	5928-9 A1R				
	(code L1T)	1	5928-9 A1T				
	L1-H, L2-H (2 D.)						
	(code H1B)	1	5930-1 A1B	---- ---	---- ---	5930-1 A1B	
	(code H1Q)	1	5930-1 A1Q	---- ---	---- ---	5930-1 A1Q	
	(code H1R)	1	5930-1 A1R	---- ---	---- ---	5930-1 A1R	
	(code H1T)	1	5930-1 A1T	---- ---	---- ---	5930-1 A1T	
	L1-L, L2-L (4 D.)	1	5926 A1B				
	(code L1Q)	1	5926 A1Q				
	(code L1R)	1	5926 A1R				
	(code L1T)	1	5926 A1T				
	L1-H, L2-H (4 D.)						
	(code H1B)	1	5927 A1B				
	(code H1Q)	1	5927 A1Q				
	(code H1R)	1	5927 A1R				
	(code H1T)	1	5927 A1T				
	L1-L, L2-L (4 D.)						
	(code L5B)	1	5937 A5B				
	(code L5R)	1	5937 A5R				
	(code L5T)	1	5937 A5T				
	L1-H, L2-H (4 D.)						
	(code H4B)	1	5934 A4B	---- ---	5934 A4B	---- ---	5932-3 A4B
	(code H4Q)	1	5934 A4Q	---- ---	5934 A4Q	---- ---	5932-3 A4Q
	(code H4R)	1	5934 A4R	---- ---	5934 A4R	---- ---	5932-3 A4R
	(code H4T)	1	5934 A4T	---- ---	5934 A4T	---- ---	5932-3 A4T
	(code H5B)	1	5937 A5B				
	(code H5R)	1	5937 A5R				
	(code H5T)	1	5937 A5T				
	L1-L, L2-L						
	(code L4B)	1	---- ---	---- ---	5935 A4B		
	(code L4Q)	1	---- ---	---- ---	5935 A4Q		
	(code L4R)	1	---- ---	---- ---	5935 A4R		
	(code L4T)	1	---- ---	---- ---	5935 A4T		
	L1-H, L2-H						
	(code H8B)	1	*5936 A4B				
	(code H8T)	1	*5936 A4T				
	(code H8R)	1	⊟5936 A8R				

★ Indicates use as required.
⊟ Indicates parts not listed in any previous parts book.

MyMopar.com

CODE	REMARKS	PER CAR	SED.	4D H.T	STA. WGN.	2D H.T	CV. CP.
23-108-16	COVER, Front Seat Back - Cont'd						
	L1-P, L2-P						
	(code P4B)	2	---- ---	---- ---	---- ---	5936 A4B	5936 A4B
	(code P4T)	2	---- ---	---- ---	---- ---	5936 A4T	5936 A4T
	(code P4R)	2	---- ---	---- ---	---- ---	5936 A4R	5936 A4R
	(code P4X)	2	---- ---	---- ---	---- ---	5936 A4X	5936 A4X
	(code P4Y)	2	---- ---	---- ---	---- ---	5936 A4Y	5936 A4Y
23-108-32	PANEL or INSERT, Back of Front Seat Back						
	L1-H, L2-H						
	(code H8B)	1	*6112 A4B				
	(code H8T)	1	*6112 A4T				
	(code H8R)	1	⊟6112 A8R				
	L1-P, L2-P						
	(code P4B)	2	---- ---	---- ---	---- ---	6112 A4B	6112 A4B
	(code P4T)	2	---- ---	---- ---	---- ---	6112 A4T	6112 A4T
	(code P4R)	2	---- ---	---- ---	---- ---	6112 A4R	6112 A4R
	(code P4X)	2	---- ---	---- ---	---- ---	6112 A4X	6112 A4X
	(code P4Y)	2	---- ---	---- ---	---- ---	6112 A4Y	6112 A4Y
23-108-84	COVER, Front Seat Back Outer Hinge Arm						
	L1, L2 (2 D.) (paint as required)	1	---- ---	4326 VT6	---- ---	4326 VT6	4326 VT6
	(cushion frame to back hinge post)	4	---- ---	---- ---	---- ---	*4390 VT6	*4390 VT6
23-108-98	SHIELD, Front Seat Side						
	L1-P, L2-P						
	(back frame)	4	---- ---	---- ---	---- ---	2440 219	2440 219
	(cushion side)	2	---- ---	---- ---	---- ---	2440 340	2440 340
23-109-3	BACK, Rear Seat						
	L1-L, L2-L						
	(std. springs)						
	(code L1B)	1	6525 A1B				
	(code L1Q)	1	6525 A1Q				
	(code L1R)	1	6525 A1R				
	(code L1T)	1	6525 A1T				
	(heavy duty springs)						
	(code L1B)	1	6533 A1B				
	(code L1Q)	1	6533 A1Q				
	(code L1R)	1	6533 A1R				
	(code L1T)	1	6533 A1T				
	(code L5B)	1	6537 A5B				
	(code L5R)	1	6537 A5R				
	(code L5T)	1	6537 A5T				
	(spring and cover) (2nd. seat)						
	(code L4B)	1	---- ---	---- ---	6530 A4B		
	(code L4Q)	1	---- ---	---- ---	6530 A4Q		
	(code L4R)	1	---- ---	---- ---	6530 A4R		
	(code L4T)	1	---- ---	---- ---	6530 A4T		
	L1-H, L2-H						
	(code H1B)	1	6526 A1B	---- ---	---- ---	6526 A1B	
	(code H1Q)	1	6526 A1Q	---- ---	---- ---	6526 A1Q	
	(code H1R)	1	6526 A1R	---- ---	---- ---	6526 A1R	
	(code H1T)	1	6526 A1T	---- ---	---- ---	6526 A1T	
	(code H4B)	1	6529 A4B				
	(code H4R)	1	6529 A4R				
	(code H4T)	1	6529 A4T				
	(code H5B)	1	6537 A5B				
	(code H5R)	1	6537 A5R				
	(code H5T)	1	6537 A5T				

★ Indicates use as required.
⊟ Indicates parts not listed in any previous parts book.
Right and left part numbers are on same line, first number is right, second number is left.
* Indicates change or addition.

MyMopar.com

Printed in U.S.A.
Prices and specifications subject to change without notice.
May 1965, Supersedes Sept. 4, 1964.

CODE	REMARKS	PER CAR	SED.	4D H.T	STA. WGN.	2D H.T	CV. CP.
23-109-3	BACK, Rear Seat - Cont'd						
	L1-H, L2-H						
	(spring and cover) (2nd seat)						
	(code H4B)	1	---- ---	---- ---	6528 A4B		
	(code H4Q)	1	---- ---	---- ---	6528 A4Q		
	(code H4R)	1	---- ---	---- ---	6528 A4R		
	(code H4T)	1	---- ---	---- ---	6528 A4T		
	Nut (spring attaching)	2	---- ---	---- ---	6000 234		
	L1-P, L2-P						
	(code P4B)	1	---- ---	---- ---	---- ---	6531 A4B	6536 A4B
	(code P4T)	1	---- ---	---- ---	---- ---	6531 A4T	6536 A4T
	(code P4R)	1	---- ---	---- ---	---- ---	6531 A4R	6536 A4R
	(code P4X)	1	---- ---	---- ---	---- ---	6531 A4X	6536 A4X
	(code P4Y)	1	---- ---	---- ---	---- ---	6531 A4Y	6536 A4Y
	L1-H, L2-H						
	(code H4B)	1	---- ---	---- ---	---- ---	---- ---	6535 A4B
	(code H4Q)	1	---- ---	---- ---	---- ---	---- ---	6535 A4Q
	(code H4R)	1	---- ---	---- ---	---- ---	---- ---	6535 A4R
	(code H4T)	1	---- ---	---- ---	---- ---	---- ---	6535 A4T
	Screw and Washer (spring attaching)	2	---- ---	---- ---	---- ---	---- ---	6023 545
23-109-4	COVER, Rear Seat Back						
	L1-L, L2-L						
	(code L1B)	1	6726 A1B				
	(code L1Q)	1	6726 A1Q				
	(code L1R)	1	6726 A1R				
	(code L1T)	1	6726 A1T				
	(code L4B)	1	---- ---	---- ---	6731 A4B		
	(code L4Q)	1	---- ---	---- ---	6731 A4Q		
	(code L4R)	1	---- ---	---- ---	6731 A4R		
	(code L4T)	1	---- ---	---- ---	6731 A4T		
	(code L5B)	1	6736 A5B				
	(code L5R)	1	6736 A5R				
	(code L5T)	1	6736 A5T				
	L1-H, L2-H						
	(code H1B)	1	6727 A1B	---- ---	---- ---	6727 A1B	
	(code H1Q)	1	6727 A1Q	---- ---	---- ---	6727 A1Q	
	(code H1R)	1	6727 A1R	---- ---	---- ---	6727 A1R	
	(code H1T)	1	6727 A1T	---- ---	---- ---	6727 A1T	
	(code H4B)	1	6730 A4B	---- ---	6729 A4B	---- ---	6734 A4B
	(code H4Q)	1	---- ---	---- ---	6729 A4Q	---- ---	6734 A4Q
	(code H4R)	1	6730 A4R	---- ---	6729 A4R	---- ---	6734 A4R
	(code H4T)	1	6730 A4T	---- ---	6729 A4T	---- ---	6734 A4T
	(code H5B)	1	6736 A5B				
	(code H5R)	1	6736 A5R				
	(code H5T)	1	6736 A5T				
	L1-H, L2-H						
	(code H8B)	1	*6732 A4B				
	(code H8T)	1	*6732 A4T				
	(code H8R)	1	⊟6732 A8R				
	L1-P, L2-P						
	(code P4B)	1	---- ---	---- ---	---- ---	6732 A4B	6735 A4B
	(code P4T)	1	---- ---	---- ---	---- ---	6732 A4T	6735 A4T
	(code P4R)	1	---- ---	---- ---	---- ---	6732 A4R	6735 A4R
	(code P4X)	1	---- ---	---- ---	---- ---	6732 A4X	6735 A4X
	(code P4Y)	1	---- ---	---- ---	---- ---	6732 A4Y	6735 A4Y
23-109-6	FOUNDATION, Back of Rear Seat Back						
	L1, L2 (paint as required)	1	---- ---	---- ---	---- ---	---- ---	4410 AX9
	Fastener	10	---- ---	---- ---	---- ---	---- ---	6000 365

★ Indicates use as required.
⊟ Indicates parts not listed in any previous parts book.

MyMopar.com

Printed in U.S.A.
Prices and specifications subject to change without notice.
Right and left part numbers are on same line, first number is right, second number is left.
* Indicates change or addition.

CODE	REMARKS	PER CAR	SED.	4D H.T	STA. WGN.	2D H.T	CV. CP.
23-109-35	CUSHION, Rear Seat						
	L1-L, L2-L						
	(std. springs)						
	(code L1B)	1	6227 A1B				
	(code L1Q)	1	6227 A1Q				
	(code L1R)	1	6227 A1R				
	(code L1T)	1	6227 A1T				
	(heavy duty springs)						
	(code L1B)	1	6235 A1B				
	(code L1Q)	1	6235 A1Q				
	(code L1R)	1	6235 A1R				
	(code L1T)	1	6235 A1T				
	(2nd. seat)						
	(code L5B)	1	6237 A5B				
	(code L5R)	1	6237 A5R				
	(code L5T)	1	6237 A5T				
	(code L4B)	1	---- ---	---- ---	6232 A4B		
	(code L4Q)	1	---- ---	---- ---	6232 A4Q		
	(code L4R)	1	---- ---	---- ---	6232 A4R		
	(code L4T)	1	---- ---	---- ---	6232 A4T		
	L1-H, L2-H (2nd. seat)						
	(code H1B)	1	6228 A1B	---- ---	---- ---	6228 A1B	
	(code H1Q)	1	6228 A1Q	---- ---	---- ---	6228 A1Q	
	(code H1R)	1	6228 A1R	---- ---	---- ---	6228 A1R	
	(code H1T)	1	6228 A1T	---- ---	---- ---	6228 A1T	
	(code H4B)	1	6231 A4B	---- ---	6230 A4B	---- ---	6229 A4B
	(code H4Q)	1	---- ---	---- ---	6230 A4Q	---- ---	6229 A4Q
	(code H4R)	1	6231 A4R	---- ---	*6230 A4R	---- ---	6229 A4R
	(code H4T)	1	6231 A4T	---- ---	6230 A4T	---- ---	6229 A4T
	(code H5B)	1	6237 A5B				
	(code H5R)	1	6237 A5R				
	(code H5T)	1	6237 A5T				
	L1-P, L2-P						
	(code P4B)	1	---- ---	---- ---	---- ---	6233 A4B	6234 A4B
	(code P4T)	1	---- ---	---- ---	---- ---	6233 A4T	6234 A4T
	(code P4R)	1	---- ---	---- ---	---- ---	6233 A4R	6234 A4R
	(code P4X)	1	---- ---	---- ---	---- ---	6233 A4X	6234 A4X
	(code P4Y)	1	---- ---	---- ---	---- ---	6233 A4Y	6234 A4Y
	Screw and Washer (2nd. seat cushion to floor)	2	---- ---	---- ---	6023 545	6023 545	
23-109-36	COVER, Rear Seat Cushion						
	L1, L2						
	(code L1B)	1	6412 A1B				
	(code L1Q)	1	6412 A1Q				
	(code L1R)	1	6412 A1R				
	(code L1T)	1	6412 A1T				
	(code L4B)	1	---- ---	---- ---	6417 A4B		
	(code L4Q)	1	---- ---	---- ---	6417 A4Q		
	(code L4R)	1	---- ---	---- ---	6417 A4R		
	(code L4T)	1	---- ---	---- ---	6417 A4T		
	(codes L5B, H5B)	1	6420 A5B	---- ---	6420 A5B		
	(codes L5R, H5R)	1	6420 A5R	---- ---	6420 A5R		
	(codes L5T, H5T)	1	6420 A5T	---- ---	6420 A5T		
	L1-H, L2-H						
	(code H1B)	1	6413 A1B	---- ---	---- ---	6413 A1B	
	(code H1Q)	1	6413 A1Q	---- ---	---- ---	6413 A1Q	
	(code H1R)	1	6413 A1R	---- ---	---- ---	6413 A1R	
	(code H1T)	1	6413 A1T	---- ---	---- ---	6413 A1T	
	(code H4B)	1	6416 A4B	---- ---	6415 A4B	---- ---	6414 A4B
	(code H4Q)	1	---- ---	---- ---	6415 A4Q	---- ---	6414 A4Q
	(code H4R)	1	6416 A4R	---- ---	6415 A4R	---- ---	6414 A4R
	(code H4T)	1	6416 A4T	---- ---	6415 A4T	---- ---	6414 A4T

★ Indicates use as required.
⊟ Indicates parts not listed in any previous parts book.
Right and left part numbers are on same line, first number is right, second number is left.
* Indicates change or addition.

MyMopar.com
Printed in U.S.A.
Prices and specifications subject to change without notice.
May 1965, Supersedes Sept. 4, 1964.

CODE	REMARKS	PER CAR	SED.	4D H.T	STA. WGN.	2D H.T	CV. CP.
23-109-36	COVER, Rear Seat Cushion - Cont'd						
	L1-H, L2-H						
	(code H8B)	1	6418 A4B				
	(code H8T)	1	6418 A4T				
	(code H8R)	1	6418 A8R				
	L1-P, L2-P						
	(code P4B)	1	---- ---	---- ---	---- ---	6418 A4B	6419 A4B
	(code P4R)	1	---- ---	---- ---	---- ---	6418 A4R	6419 A4R
	(code P4T)	1	---- ---	---- ---	---- ---	6418 A4T	6419 A4T
	(code P4X)	1	---- ---	---- ---	---- ---	6418 A4X	6419 A4X
	(code P4Y)	1	---- ---	---- ---	---- ---	6418 A4Y	6419 A4Y
23-109-38	RETAINER, Center Floor Pan Rear Seat Cushion						
	L1, L2	2	1810 037	---- ---	1810 037	1810 037	1810 037
23-111-37	STRIP, Folding Top Bow Tacking						
	L1, L2						
	(No. 1 bow)	2	---- ---	---- ---	---- ---	---- ---	2424 591
	(No. 2 bow)	1	---- ---	---- ---	---- ---	---- ---	2424 607
	(rear bow end)	2	---- ---	---- ---	---- ---	---- ---	*2573 686
23-112-4	RETAINER, Folding Top Header Top Material						
	L1, L2	1	---- ---	---- ---	---- ---	---- ---	2424 262-3
23-112-12	BOOT, Folding Top Dust						
	L1, L2						
	(codes H4B, P4B)	1	---- ---	---- ---	---- ---	---- ---	1922 AB4
	(code H4Q)	1	---- ---	---- ---	---- ---	---- ---	1922 AQ4
	(code H4R)	1	---- ---	---- ---	---- ---	---- ---	1922 AR5
	(code P4R)	1	---- ---	---- ---	---- ---	---- ---	1922 AR7
	(code P4Y)	1	---- ---	---- ---	---- ---	---- ---	1922 AW3
	(code P4X)	1	---- ---	---- ---	---- ---	---- ---	*1922 VX9
	Socket (dust boot to pocket panel)(dust boot to belt moulding)	★	---- ---	---- ---	---- ---	---- ---	141 998
23-112-18	RETAINER, Rear Seat Back Dust Boot						
	L1, L2	1	---- ---	---- ---	---- ---	---- ---	2577 275
23-112-23	COVER, Folding Top Rear Bow to Link Joint						
	L1, L2						
	(black)	2	---- ---	---- ---	---- ---	---- ---	1968 VX9
	(white)	2	---- ---	---- ---	---- ---	---- ---	1968 VW2
23-112-45	CURTAIN, Folding Top Rear						
	L1, L2 (blue)	1	---- ---	---- ---	---- ---	---- ---	1927 VB1
	(black)	1	---- ---	---- ---	---- ---	---- ---	1927 AX9
	(backlite)	1	---- ---	---- ---	---- ---	---- ---	1928 AX9
23-112-46	ZIPPER, Folding Top Rear Curtain						
	L1, L2 (full)						
	(white)	1	---- ---	---- ---	---- ---	---- ---	1920 VW2
	(black)	1	---- ---	---- ---	---- ---	---- ---	1920 AX8

★ Indicates use as required.
∃ Indicates parts not listed in any previous parts book.
May 1965, Supersedes Sept. 4, 1964.

Printed in U.S.A.
Prices and specifications subject to change without notice.
Right and left part numbers are on same line, first number is right, second number is left.
* Indicates change or addition.

MyMopar.com

CODE	REMARKS	PER CAR	SED.	4D H.T	STA. WGN.	2D H.T	CV. CP.
23-112-50	TAPE, Folding Top						
	L1, L2 (sold by the inch)						
	(side rear closure loop)						
	(black)	★	---- ---	---- ---	---- ---	---- ---	1933 TX8
	(white)	★	---- ---	---- ---	---- ---	---- ---	1933 VW2
	(rear curtain closure hook)						
	(black)	★	---- ---	---- ---	---- ---	---- ---	1934 TX8
	(white)	★	---- ---	---- ---	---- ---	---- ---	1934 VW2
23-112-70	RETAINER, Folding Top to Belt Bar						
	L1, L2						
	(side)	1	---- ---	---- ---	---- ---	---- ---	2448 104-5
	(center)	1	---- ---	---- ---	---- ---	---- ---	2448 103
	(quarter)	2	---- ---	---- ---	---- ---	---- ---	2252 610
23-112-75	TIP, Wire-On Binding End						
	L1, L2	1	---- ---	---- ---	---- ---	---- ---	1158 976-7
23-112-88	CABLE, Rear Bow Tension						
	L1, L2	2	---- ---	---- ---	---- ---	---- ---	*1972 AX8
		2	---- ---	---- ---	---- ---	---- ---	1972 VW2
	(top cover)	2	---- ---	---- ---	---- ---	---- ---	2525 851
	Bolt	2	---- ---	---- ---	---- ---	---- ---	6022 169
23-112-108	DECK and SIDE QUARTER, Folding Top						
	L1, L2						
	(blue)	1	---- ---	---- ---	---- ---	---- ---	1936 AB1
	(white)	1	---- ---	---- ---	---- ---	---- ---	1936 AW1
	(black)	1	---- ---	---- ---	---- ---	---- ---	1936 AX9
23-112-112	PAD, Folding Top Side Quarter Stay						
	L1, L2 (black)	1	---- ---	---- ---	---- ---	---- ---	1948-9 AX9
	(white)	1	---- ---	---- ---	---- ---	---- ---	1948-9 AW1
23-112-153	WELL COVER, Pocket PANEL, Pocket Panel COVER, Pocket Shelf PANEL, Folding Top						
	L1, L2						
	(pocket panel)						
	(codes H4B, P4B, H4Q, H4R, P4R, H4T, P4T, P4X, P4Y)	1	---- ---	---- ---	---- ---	---- ---	2010-1 AT6
	(pocket panel cover) (upper inner)						
	(codes P4B, H4B)	1	---- ---	---- ---	---- ---	---- ---	2020-1 VB6
	(codes P4R, H4R)	1	---- ---	---- ---	---- ---	---- ---	*2020-1 VT6
	(code P4Y)	1	---- ---	---- ---	---- ---	---- ---	2020-1 AY6
	(code H4Q)	1	---- ---	---- ---	---- ---	---- ---	2020-1 VQ6
	(codes H4T, P4T)	1	---- ---	---- ---	---- ---	---- ---	2020-1 VT6
	(code P4X)	1	---- ---	---- ---	---- ---	---- ---	2020-1 VX8
	L1, L2 (well cover)						
	(codes H4B, P4B)	1	---- ---	---- ---	---- ---	---- ---	1941 AB4
	(codes H4T, P4T)	1	---- ---	---- ---	---- ---	---- ---	1941 VT6
	(code H4Q)	1	---- ---	---- ---	---- ---	---- ---	1941 AQ4
	(code H4R)	1	---- ---	---- ---	---- ---	---- ---	1941 AR5
	(code P4R)	1	---- ---	---- ---	---- ---	---- ---	1941 AR7
	(code P4Y)	1	---- ---	---- ---	---- ---	---- ---	1941 AW3
	(code P4X)	1	---- ---	---- ---	---- ---	---- ---	1941 VX9
	Cap (well cover to folding top cover)	2	---- ---	---- ---	---- ---	---- ---	6000 434

★ Indicates use as required.
B Indicates parts not listed in any previous parts book.
Right and left part numbers are on same line, first number is right, second number is left.
* Indicates change or addition.

MyMopar.com

CODE	REMARKS	PER CAR	SED.	4D H.T	STA. WGN.	2D H.T	CV. CP.
23-112-160	PAD, Folding Top Pocket Panel Arm Rest						
	(codes H4B, P4B)	1	---- ---	---- ---	---- ---	---- ---	1204-5 AB4
	(code H4R)	1	---- ---	---- ---	---- ---	---- ---	1204-5 AR5
	(code P4R)	1	---- ---	---- ---	---- ---	---- ---	1204-5 AR7
	(code P4X)	1	---- ---	---- ---	---- ---	---- ---	1204-5 VX9
	(code H4Q)	1	---- ---	---- ---	---- ---	---- ---	1204-5 AQ4
	(codes P4T, H4T)	1	---- ---	---- ---	---- ---	---- ---	1204-5 VT6
	(code P4Y)	1	---- ---	---- ---	---- ---	---- ---	1204-5 AW3
23-113-45	WEATHERCORD, Quarter Window Opening						
	L1-L, L2-L, L1-H, L2-H (2 D.)						
	(codes L1B, H1B)	2	1515 AB4				
	(codes L1Q, H1Q)	2	1515 AQ4				
	(codes L1R, H1R)	2	⊟1514 AR5				
23-113-52	STRIP, Windshield Lower Inside Trim						
	L1-H, L2-H, L1-P, L2-P						
	(codes H1B, P4B)	1	---- ---	---- ---	---- ---	*4249 AB8	
	(code H1Q)	1	---- ---	---- ---	---- ---	*4249 AQ8	
	(codes H1R, P4R)	1	---- ---	---- ---	---- ---	---- ---	*4249 AR9
	(codes H1T, P4T)	1	---- ---	---- ---	---- ---	*4249 VT8	*4249 VT8
	(code P4Y)	1	---- ---	---- ---	---- ---	*4249 AY8	*4249 AY8
	(codes H4B, P4B)	1	---- ---	---- ---	---- ---	---- ---	4249 AB8
	(code H4Q)	1	---- ---	---- ---	---- ---	---- ---	4249 AQ8
23-113-56	WEATHERCORD, Folding Top Header						
	L1, L2 (sold by the inch)						
	(blue)	1	---- ---	---- ---	---- ---	---- ---	1947 AB1
	(white)	1	---- ---	---- ---	---- ---	---- ---	1947 AW1
23-113-84	WELT, Folding Top						
	L1, L2 (sold by the inch)						
	(dust boat filler, channel attaching)	★	---- ---	---- ---	---- ---	---- ---	2572 166
	(folding top header)						
	(white)	1	---- ---	---- ---	---- ---	---- ---	1945 VW2
	(black)	1	---- ---	---- ---	---- ---	---- ---	1959 VX8
23-115-4	PUSHNUT, Front Seat Back to Cushion Mounting						
	L1-P, L2-P	4	---- ---	---- ---	---- ---	2410 102	2410 102
23-115-6	PIN, Front Seat Back Frame to Cushion Frame						
	L1-P, L2-P	4	---- ---	---- ---	---- ---	2410 054	2410 054
	Clip (front seat back outer hinge arm cover)	2	⊟2160 974	---- ---	---- ---	⊟2160 974	⊟2160 974

NOTES

★ Indicates use as required.
⊟ Indicates parts not listed in any previous parts book.
May 1965, Supersedes Sept. 4, 1964.

Printed in U.S.A.
Prices and specifications subject to change without notice.
Right and left part numbers are on same line, first number is right, second number is left.
• Indicates change or addition.

MyMopar.com

1965 CHRYSLER
1965 IMPERIAL

INTERIOR TRIM

HOW TO USE INTERIOR TRIM ILLUSTRATIONS

The illustrations in this section are actual and each body style showing the Interior Trim is included.

The letters shown on the illustration indicate the description of the part and the part type code when referred to the legend which appears preceding the listing of the parts. The letters are consistent throughout the illustrations as "A" is always a Door Trim Panel, Code 23-92-5.

The numbers on the illustration indicate the distribution of material and type of material used. The numbers may vary with each illustration. The legend appears on the illustration.

Appearing throughout this section are part numbers containing both letters and numbers. These are good serviceable part numbers. The combination of letters and numbers merely indicates the parts are keyed to the interior color of the vehicles on which they are used.

For complete information on "How to Order" Trim Parts, see Master Parts Price List.

MyMopar.com

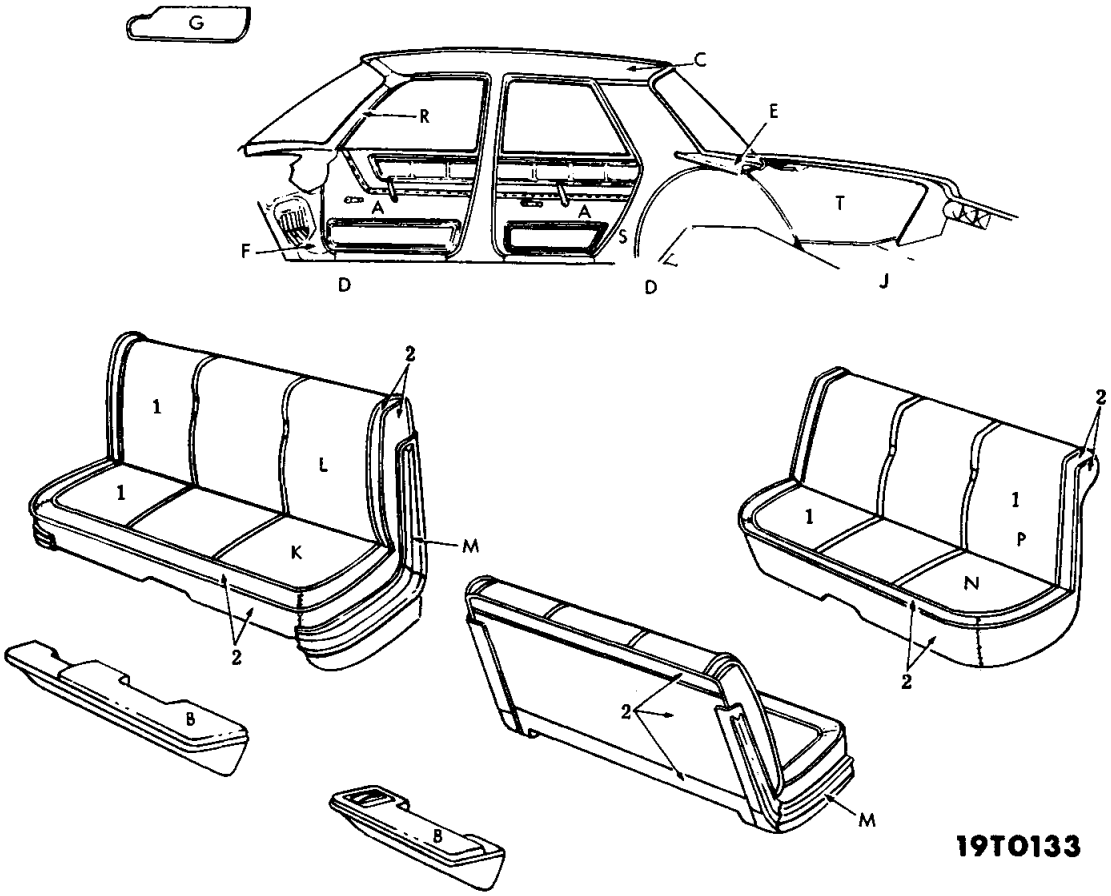

ITEM	TYPE OF MATERIAL	PART TYPE CODE	MAT'L WIDTH	PART NUMBERS AND COLORS: BLUE	BLACK & WHITE	TURQUOISE	RED
1	Body Cloth	23-114-2	60"	⊟0111 ABB	⊟0111 ANN	⊟0111 AQQ	⊟0111 ARR
2	Vinyl 35.5 oz.	23-114-15	54"	⊟0464 AB8	⊟0464 AW3	⊟0464 AQ8	⊟0464 AR7

ITEM	TYPE OF MATERIAL	PART TYPE CODE	MAT'L WIDTH	PART NUMBERS AND COLORS: TAN			
1	Body Cloth	23-114-2	60"	⊟0111 ATT			
2	Vinyl 35.5 oz.	23-114-15	54"	⊟0464 AT8			

Distribution Drawing Legend Page Appears Following Illustration Section

1965 CHRYSLER AC1-L 4 DOOR SEDAN
CLOTH AND VINYL TRIM
CODES L1B, L1N, L1Q, L1R, L1T

★ Indicates use as required.
⊟ Indicates parts not listed in any previous parts book.
September 4, 1964.

MyMopar.com

Prices and specifications subject to change without notice.
Printed in U.S.A.

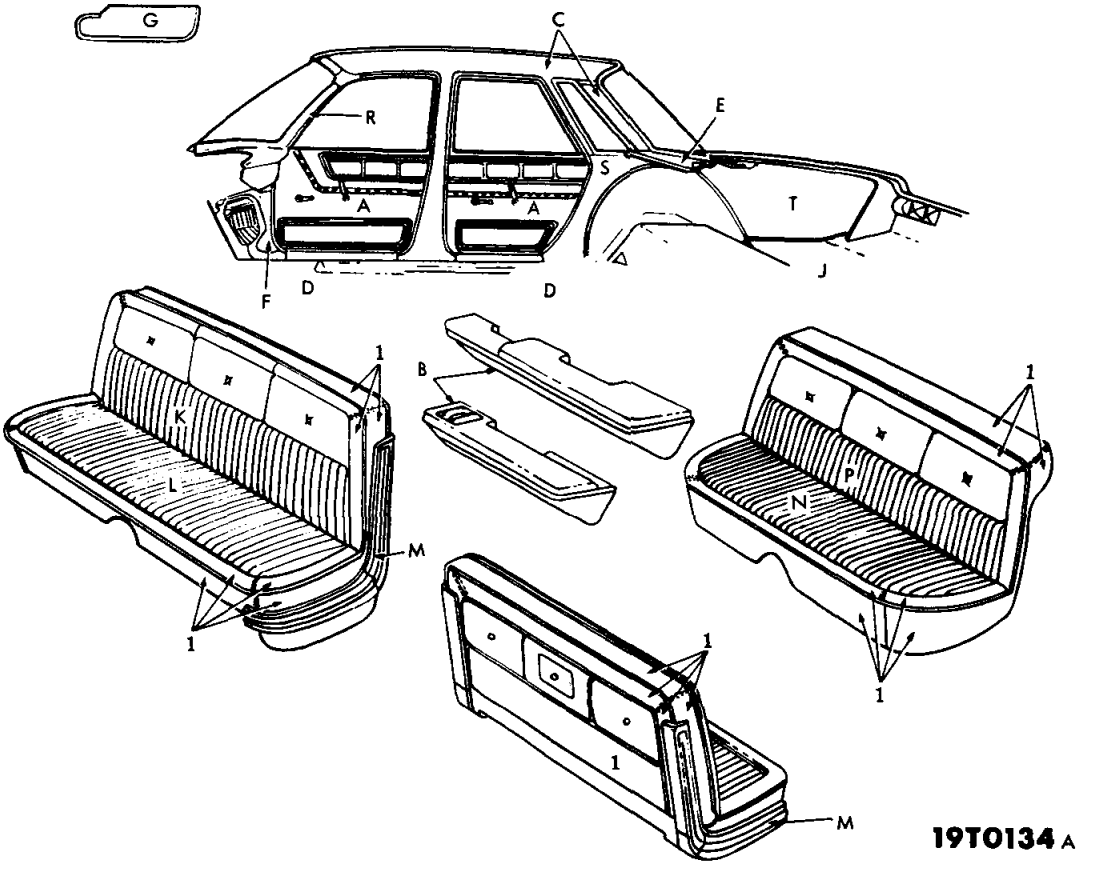

ITEM	TYPE OF MATERIAL	PART TYPE CODE	MAT'L WIDTH	PART NUMBERS AND COLORS			
				BLUE	GOLD & BLACK	BLACK & WHITE	TURQUOISE
1	Vinyl 35.5 oz.	23-114-15	54"	0464 AB8	0464 AY3	0464 AW3	0464 AQ8

ITEM	TYPE OF MATERIAL	PART TYPE CODE	MAT'L WIDTH	PART NUMBERS AND COLORS			
				RED	TAN		
1	Vinyl 35.5 oz.	23-114-15	54"	0464 AR7	0464 AT8		

Distribution Drawing Legend Page Appears Following Illustration Section

1965 CHRYSLER AC1-L 4 DOOR 6 WINDOW SEDAN
CLOTH AND VINYL TRIM
CODES L2B, L2L, L2N, L2Q, L2R, L2T

MyMopar.com

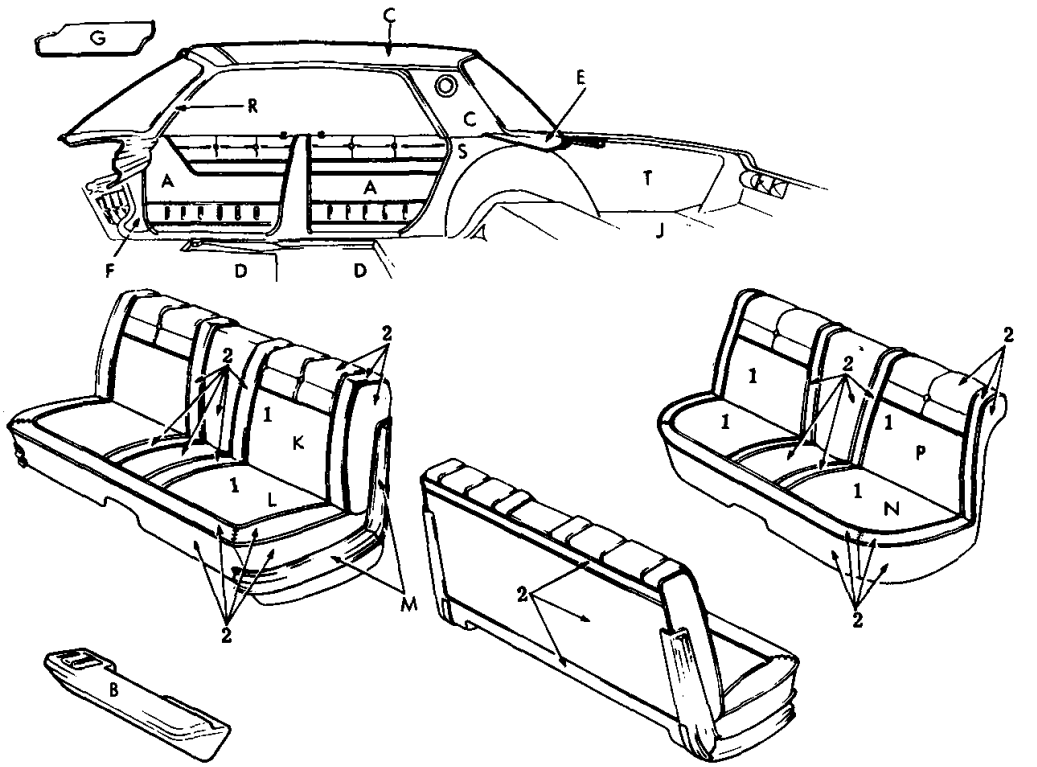

19T0135

ITEM	TYPE OF MATERIAL	PART TYPE CODE	MAT'L WIDTH	PART NUMBERS AND COLORS BLUE	TURQUOISE	RED	TAN
1	Body Cloth	23-114-2	58"	⊟0112 ABB	⊟0112 AQQ	⊟0112 ARR	⊟0112 ATT
2	Vinyl 35.5 oz.	23-114-15	54"	⊟0464 AB4	⊟0464 AQ4	⊟0464 AR7	⊟0464 AT6

Distribution Drawing Legend Page Appears Following Illustration Section

1965 CHRYSLER AC1-L 4 DOOR HARD TOP
CLOTH AND VINYL TRIM
CODES L8B, L8Q, L8R, L8T

★ Indicates use as required.
⊟ Indicates parts not listed in any previous parts book.
September 4, 1964.

Printed in U.S.A.
Prices and specifications subject to change without notice.
MyMopar.com

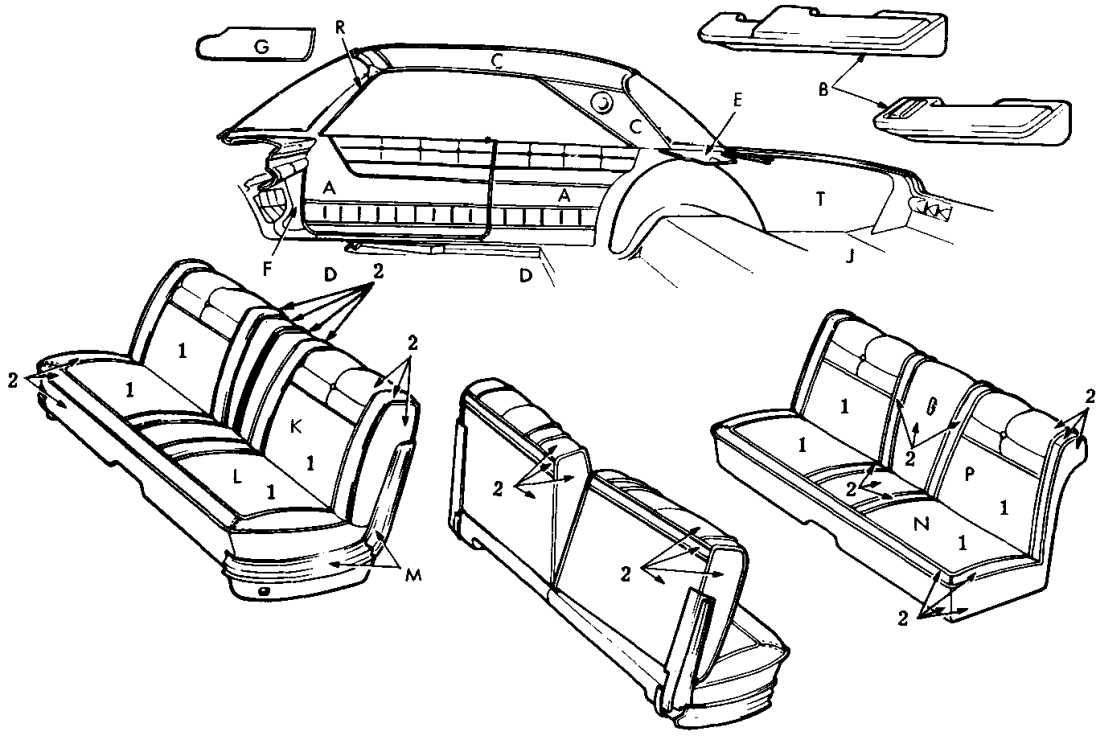

19T0136

ITEM	TYPE OF MATERIAL	PART TYPE CODE	MAT'L WIDTH	PART NUMBERS AND COLORS			
				BLUE	TURQUOISE	RED	TAN
1	Body Cloth	23-114-2	58"	B0112 ABB	B0112 AQQ	B0112 ARR	B0112 ATT
2	Vinyl 35.5 oz.	23-114-15	54"	B0464 AB4	B0464 AQ4	B0464 AR7	B0464 AT6

Distribution Drawing Legend Page Appears Following Illustration Section

1965 CHRYSLER AC1-L 2 DOOR HARD TOP
CLOTH AND VINYL TRIM
CODES L8B, L8Q, L8R, L8T

★ Indicates use as required.
B Indicates parts not listed in any previous parts book.

Printed in U.S.A.
Prices and specifications subject to change without notice.
September 4, 1964.
MyMopar.com

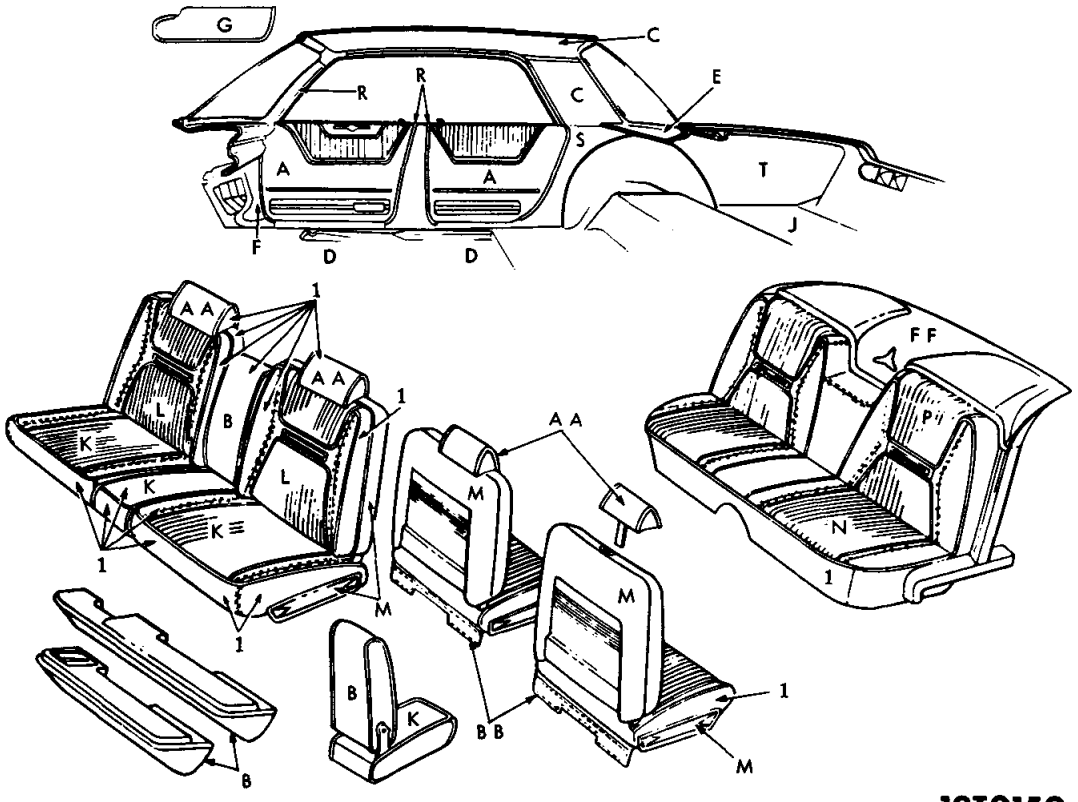

ITEM	TYPE OF MATERIAL	PART TYPE CODE	MAT'L WIDTH	PART NUMBERS AND COLORS: BLACK & WHITE			
1	Vinyl 35.5 oz.	23-114-15	54"	0464 AW3			

Distribution Drawing Legend Page Appears Following Illustration Section

1965 CHRYSLER AC2-M 4 DOOR HARD TOP
CLOTH AND VINYL TRIM
CODE M1N

MyMopar.com

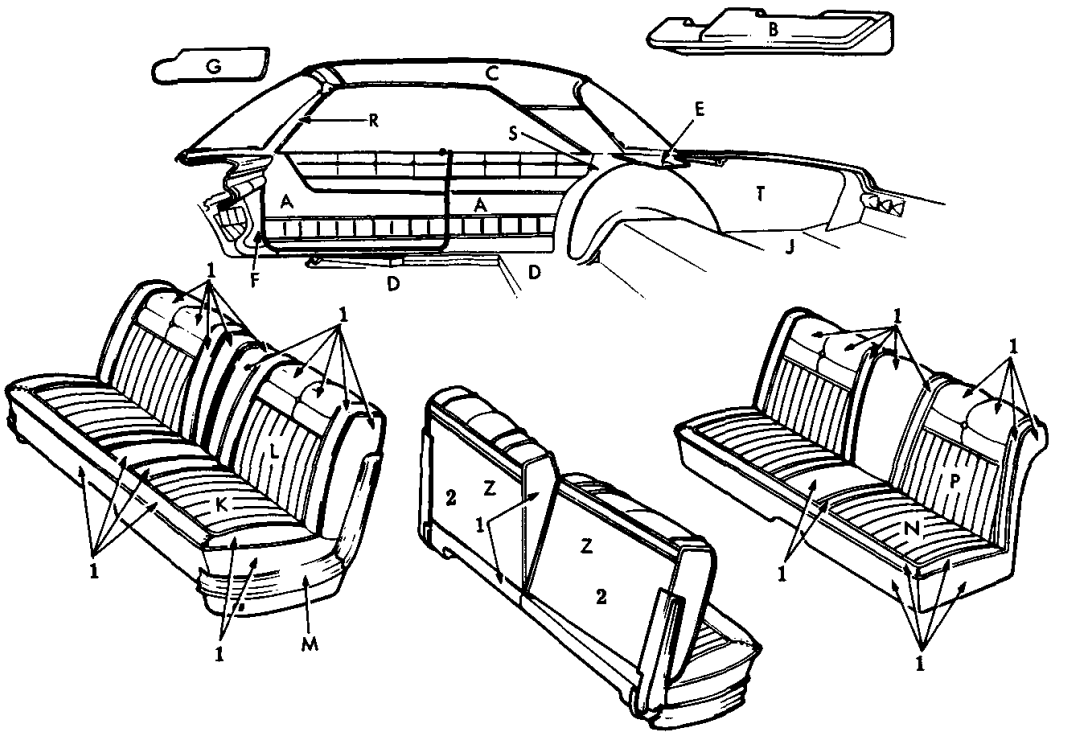

19T0138

ITEM	TYPE OF MATERIAL	PART TYPE CODE	MAT'L WIDTH	PART NUMBERS AND COLORS BLUE	GOLD & BLACK	BLACK & WHITE	RED
1	Vinyl 35.5 oz.	23-114-15	54"	⊟0464 AB4	⊟0464 AY3	⊟0464 AW3	⊟0464 AR7
2	Vinyl 26 oz.	23-114-15	56"	⊟0472 AB8	⊟0472 AX9	⊟0472 AW3	⊟0472 AR7

ITEM	TYPE OF MATERIAL	PART TYPE CODE	MAT'L WIDTH	PART NUMBERS AND COLORS TAN	BLACK		
1	Vinyl 35.5 oz.	23-114-15	54"	⊟0464 AT6	⊟0464 AX9		
2	Vinyl 26 oz.	23-114-15	56"	⊟0472 AT8	⊟0472 AX9		

Distribution Drawing Legend Page Appears Following Illustration Section

1965 CHRYSLER C1-L 2 DOOR HARD TOP
VINYL TRIM
CODES L4B, L4L, L4N, L4R, L4T, L4X

★ Indicates use as required.
⊟ Indicates parts not listed in any previous parts book.

MyMopar.com

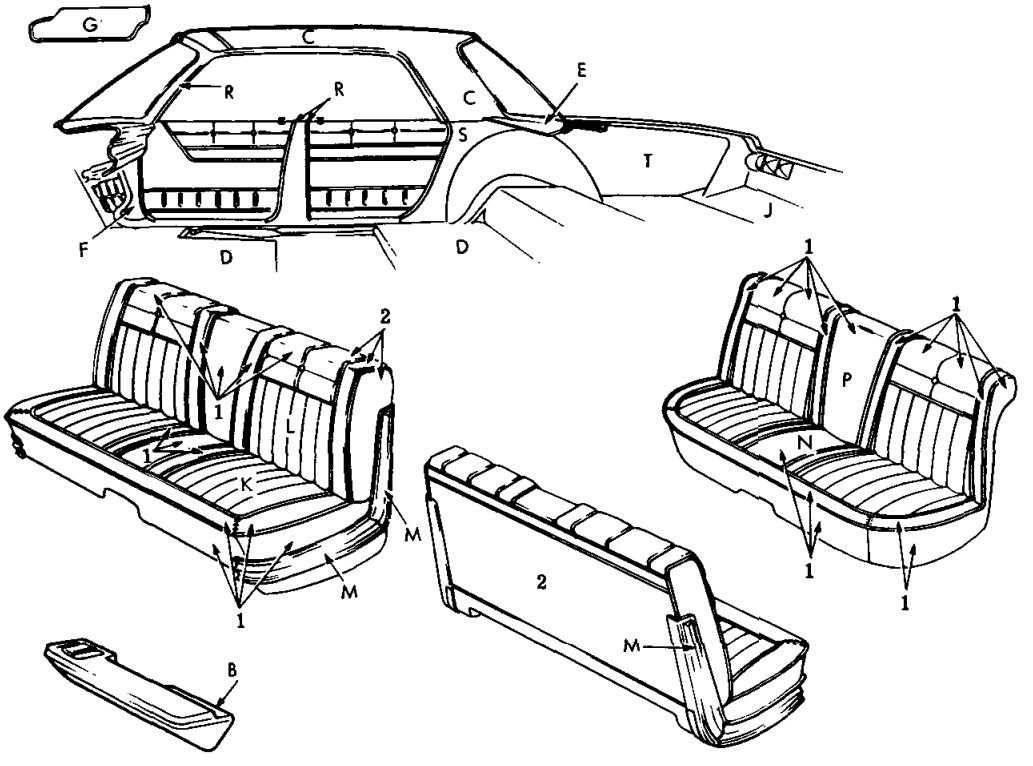

19T0137

ITEM	TYPE OF MATERIAL	PART TYPE CODE	MAT'L WIDTH	PART NUMBERS AND COLORS BLUE	GOLD & BLACK	BLACK & WHITE	RED
1	Vinyl 35.5 oz.	23-114-15	54"	⊟0464 AB4	⊟0464 AY3	⊟0464 AW3	⊟0464 AR7
2	Vinyl 26 oz.	23-114-15	56"	⊟0472 AB8	⊟0472 AX9	⊟0472 AW3	⊟0472 AR7

ITEM	TYPE OF MATERIAL	PART TYPE CODE	MAT'L WIDTH	PART NUMBERS AND COLORS TAN	BLACK		
1	Vinyl 35.5 oz.	23-114-15	54"	⊟0464 AT6	⊟0464 AX9		
2	Vinyl 26 oz.	23-114-15	56"	⊟0472 AT8	⊟0472 AX9		

Distribution Drawing Legend Page Appears Following Illustration Section

1965 CHRYSLER C1-L 4 DOOR HARD TOP
VINYL TRIM
CODES L4B, L4L, L4N, L4R, L4T, L4X

MyMopar.com

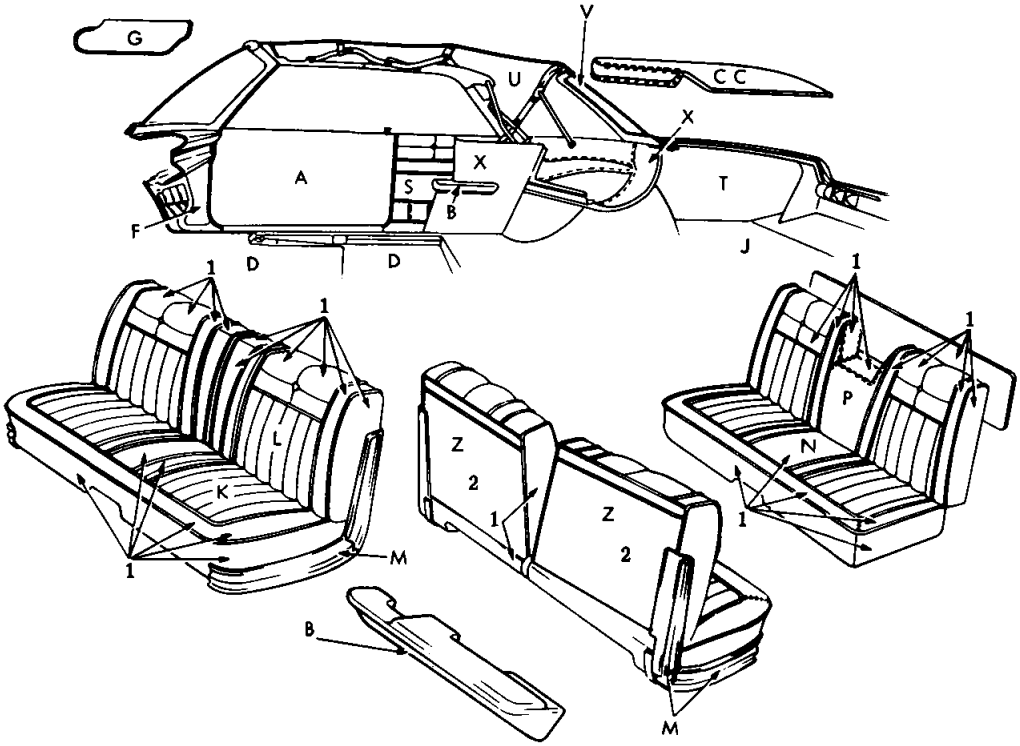

19T0139

ITEM	TYPE OF MATERIAL	PART TYPE CODE	MAT'L WIDTH	PART NUMBERS AND COLORS BLUE	GOLD & BLACK	BLACK & WHITE	RED
1	Vinyl 35.5 oz.	23-114-15	54"	⊟0464 AB4	⊟0464 AY3	⊟0464 AW3	⊟0464 AR7
2	Vinyl 26 oz.	23-114-15	56"	⊟0472 AB8	⊟0472 AX9	⊟0472 AW3	⊟0472 AR7

ITEM	TYPE OF MATERIAL	PART TYPE CODE	MAT'L WIDTH	PART NUMBERS AND COLORS TAN	BLACK		
1	Vinyl 35.5 oz.	23-114-15	54"	⊟0464 AT6	⊟0464 AX9		
2	Vinyl 26 oz.	23-114-15	56"	⊟0472 AT8	⊟0472 AX9		

Distribution Drawing Legend Page Appears Following Illustration Section

1965 CHRYSLER C1-L CONVERTIBLE
VINYL TRIM
CODES L4B, L4L, L4N, L4R, L4T, L4X

★ Indicates use as required.
⊟ Indicates parts not listed in any previous parts book.

Printed in U.S.A.
Prices and specifications subject to change without notice.
September 4, 1964.

MyMopar.com

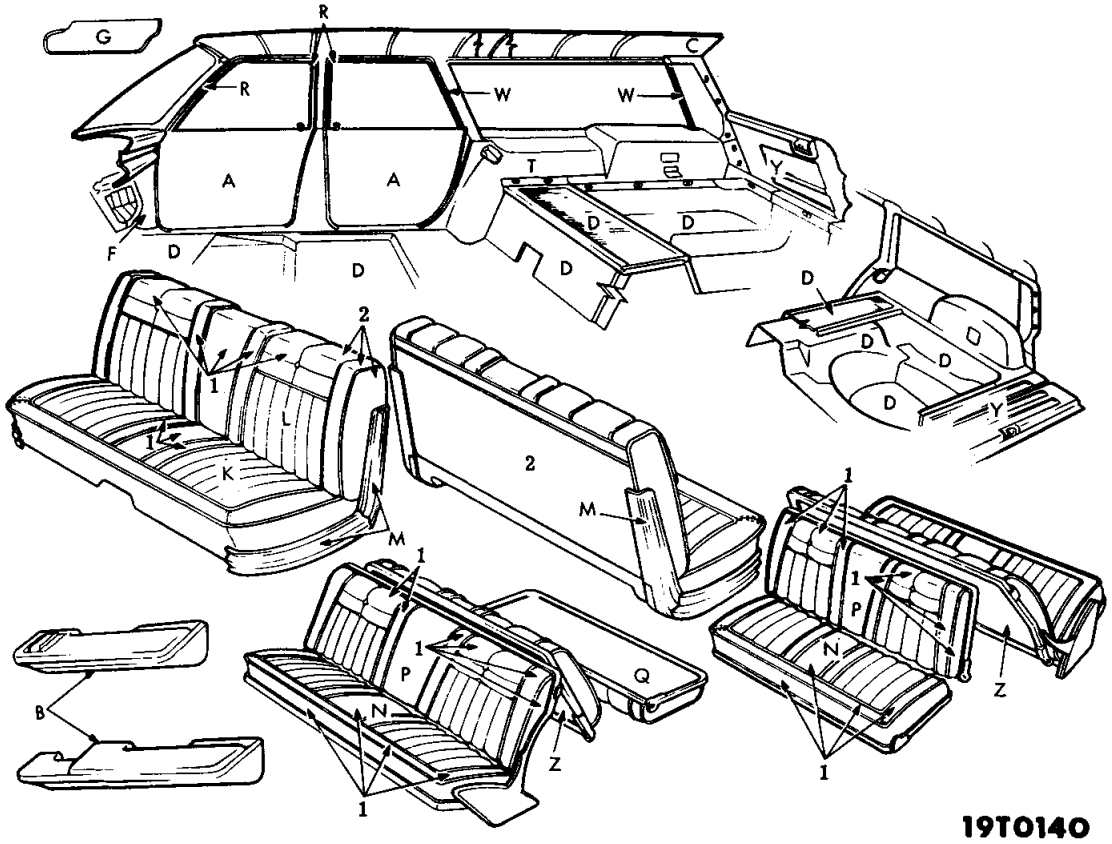

ITEM	TYPE OF MATERIAL	PART TYPE CODE	MAT'L WIDTH	PART NUMBERS AND COLORS BLUE	GOLD & BLACK	BLACK & WHITE	RED
1	Vinyl 35.5 oz.	23-114-15	54"	⊟0464 AB4	⊟0464 AY3	⊟0464 AW3	⊟0464 AR7
2	Vinyl 26 oz.	23-114-15	56"	⊟0472 AB8	⊟0472 AX9	⊟0472 AW3	⊟0472 AR7

ITEM	TYPE OF MATERIAL	PART TYPE CODE	MAT'L WIDTH	PART NUMBERS AND COLORS TAN	BLACK		
1	Vinyl 35.5 oz.	23-114-15	54"	⊟0464 AT6	⊟0464 AX9		
2	Vinyl 26 oz.	23-114-15	56"	⊟0472 AT8	⊟0472 AX9		

Distribution Drawing Legend Page Appears Following Illustration Section

1965 CHRYSLER C1-L 2 SEAT AND 3 SEAT STATION WAGON
VINYL TRIM
CODES L4B, L4L, L4N, L4R, L4T, L4X

MyMopar.com

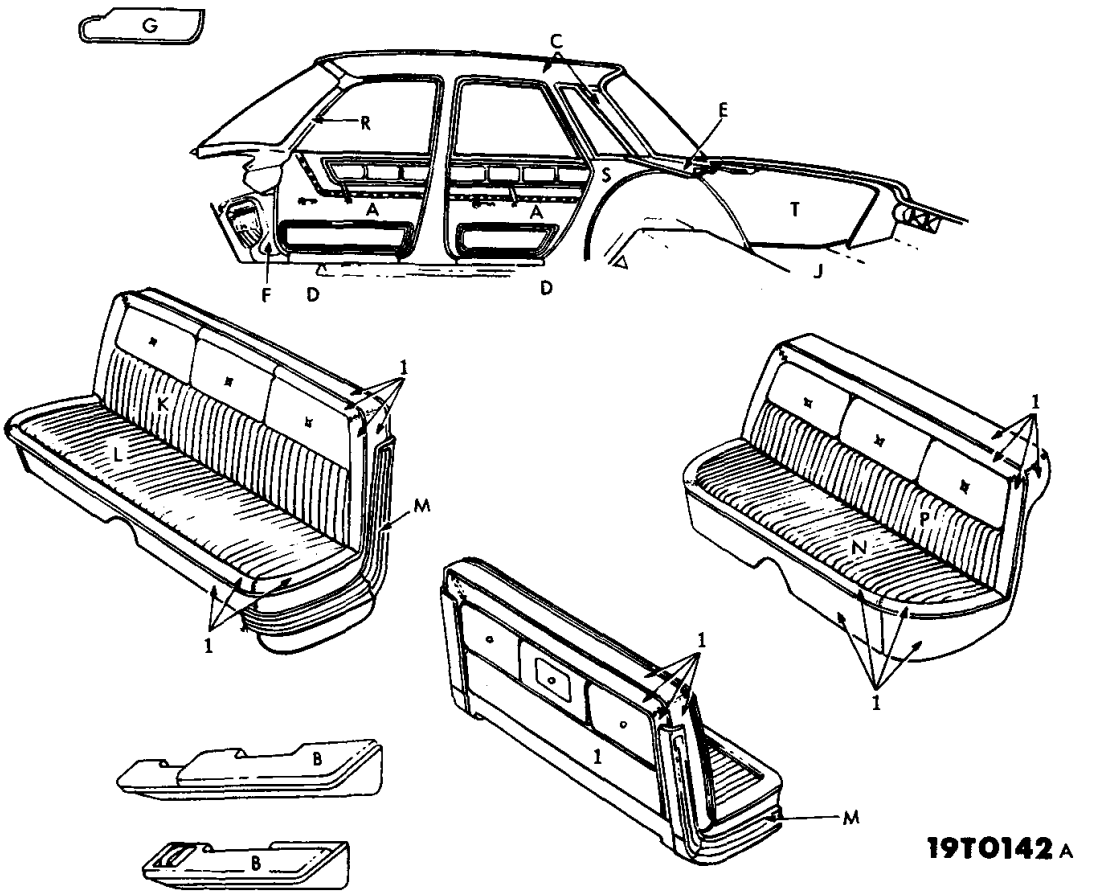

ITEM	TYPE OF MATERIAL	PART TYPE CODE	MAT'L WIDTH	PART NUMBERS AND COLORS BLUE	RED	TAN	
1	Vinyl 35.5 oz.	23-114-15	54"	0464 AB4	0464 AR7	*0464 AT8	

Distribution Drawing Legend Page Appears Following Illustration Section

1965 CHRYSLER AC1-L 4 DOOR 6 WINDOW SEDAN
VINYL TRIM
CODES L5B, L5R, L5T

★ Indicates use as required.
⊟ Indicates parts not listed in any previous parts book.
* Indicates change or addition.

Printed in U.S.A.
Prices and specifications subject to change without notice.
May 1965, Supersedes Sept. 4, 1964.

MyMopar.com

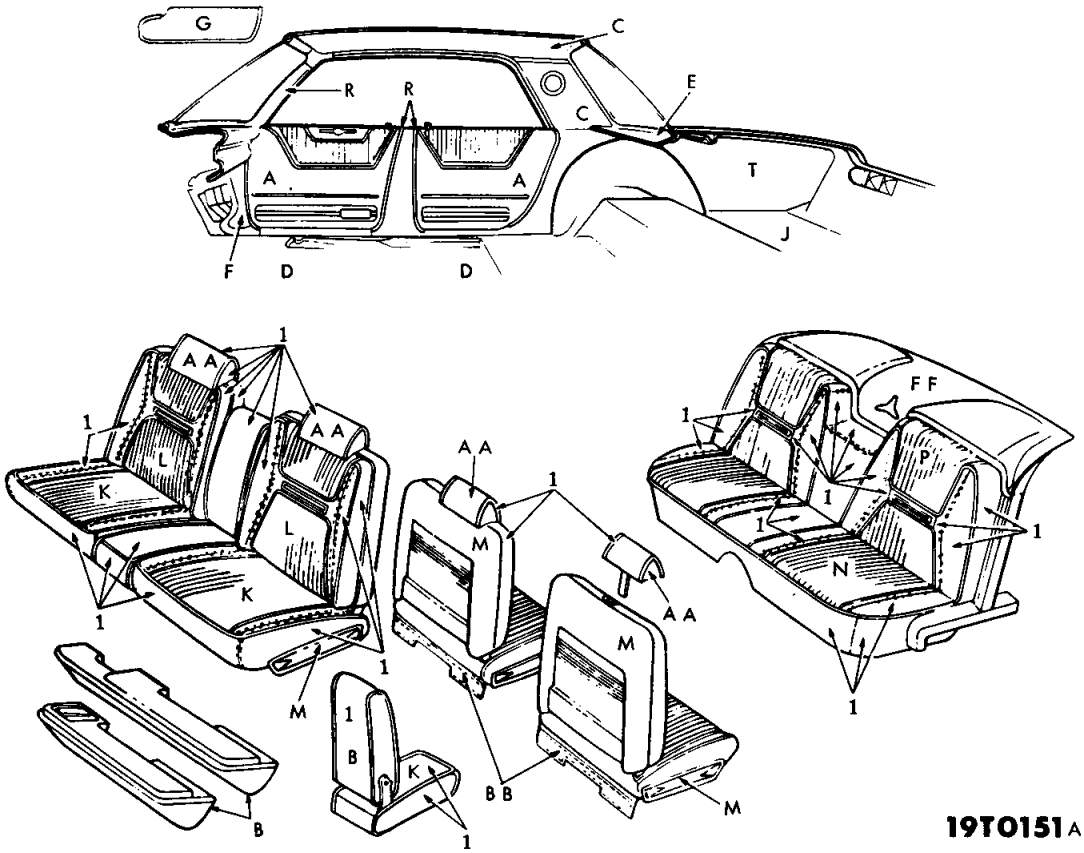

ITEM	TYPE OF MATERIAL	PART TYPE CODE	MAT'L WIDTH	PART NUMBERS AND COLORS BLUE	RED	TAN	WHITE
1	Vinyl 35.5 oz.	23-114-15	54"	0464 AB8	0464 AR7	0464 AT6	0464 AW3

ITEM	TYPE OF MATERIAL	PART TYPE CODE	MAT'L WIDTH	PART NUMBERS AND COLORS BLACK	GOLD & BLACK		
1	Vinyl 35.5 oz.	23-114-15	54"	0464 AX9	0464 AY3		

Distribution Drawing Legend Page Appears Following Illustration Section

1965 CHRYSLER AC2-M 4 DOOR HARD TOP
VINYL TRIM
CODES M4B, M4R, M4T, M4W, M4X, M4L

MyMopar.com

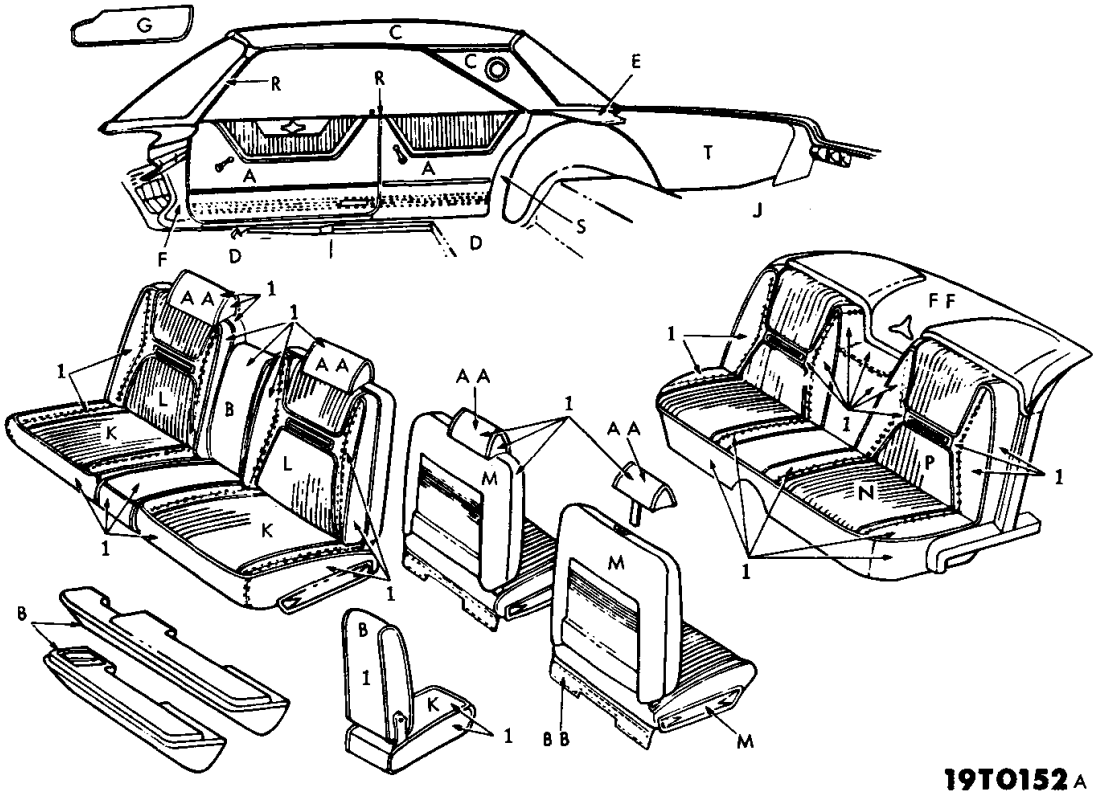

ITEM	TYPE OF MATERIAL	PART TYPE CODE	MAT'L WIDTH	PART NUMBERS AND COLORS BLUE	RED	TAN	WHITE
1	Vinyl 35.5 oz.	23-114-15	54"	0464 AB8	0464 AR7	0464 AT6	0464 AW3

ITEM	TYPE OF MATERIAL	PART TYPE CODE	MAT'L WIDTH	PART NUMBERS AND COLORS BLACK	GOLD & BLACK		
1	Vinyl 35.5 oz.	23-114-15	54"	0464 AX9	0464 AY3		

Distribution Drawing Legend Page Appears Following Illustration Section

1965 CHRYSLER AC2-M 2 DOOR HARD TOP
VINYL TRIM
CODES M4B, M4R, M4T, M4W, M4X, M4L
CODES P4B, P4R, P4T, P4W, P4X, P4L

★ Indicates use as required.
⊟ Indicates parts not listed in any previous parts book.

MyMopar.com

Printed in U.S.A.
Prices and specifications subject to change without notice.
May 1965, Supersedes Sept. 4, 1964.

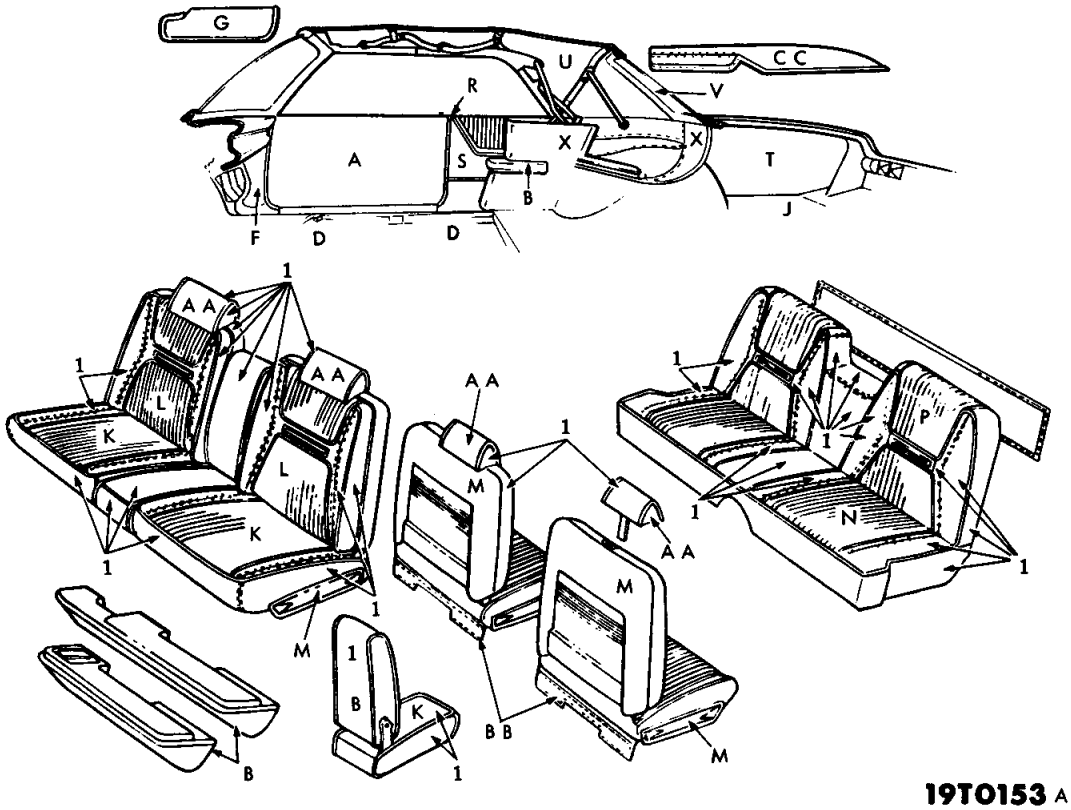

ITEM	TYPE OF MATERIAL	PART TYPE CODE	MAT'L WIDTH	PART NUMBERS AND COLORS BLUE	RED	TAN	WHITE
1	Vinyl 35.5 oz.	23-114-15	54"	0464 AB8	0464 AR7	0464 AT6	0464 AW3

ITEM	TYPE OF MATERIAL	PART TYPE CODE	MAT'L WIDTH	PART NUMBERS AND COLORS BLACK	GOLD & BLACK		
1	Vinyl 35.5 oz.	23-114-15	54"	0464 AX9	0464 AY3		

Distribution Drawing Legend Page Appears Following Illustration Section

1965 CHRYSLER AC2-M CONVERTIBLE
VINYL TRIM
CODES M4B, M4R, M4T, M4W, M4X, M4L
CODES P4B, P4R, P4T, P4W, P4X, P4L

★ Indicates use as required.
B Indicates parts not listed in any previous parts book.
May 1965, Supersedes Sept. 4, 1964.

Printed in U.S.A.
Prices and specifications subject to change without notice.
MyMopar.com

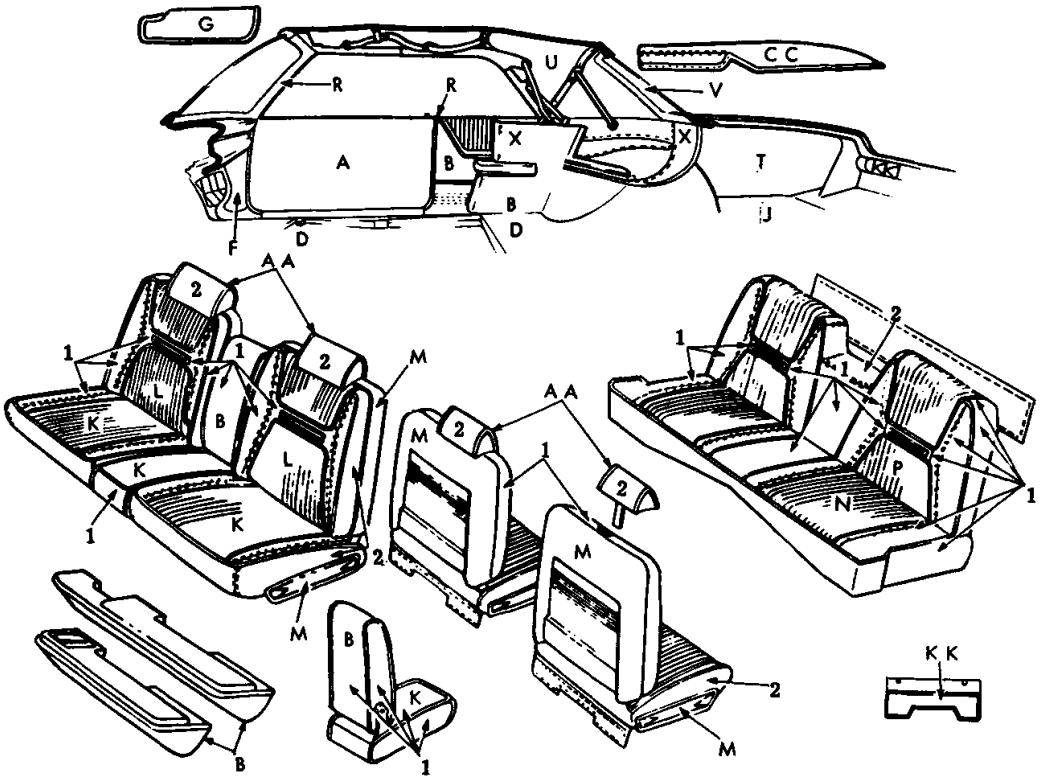

ITEM	TYPE OF MATERIAL	PART TYPE CODE	MAT'L WIDTH	PART NUMBERS AND COLORS RED	BLACK		
1	Leather	23-114-14	Hide	B0302 AR7	B0302 AX9		
2	Vinyl 35.5 oz.	23-114-15	54"	B0464 AR7	B0464 AX9		

Distribution Drawing Legend Page Appears Following Illustration Section

1965 CHRYSLER AC2-M, AC2-P CONVERTIBLE
LEATHER TRIM
CODES M3R, M3X
CODES P3R, P3X

★ Indicates use as required.
B Indicates parts not listed in any previous parts book.

MyMopar.com

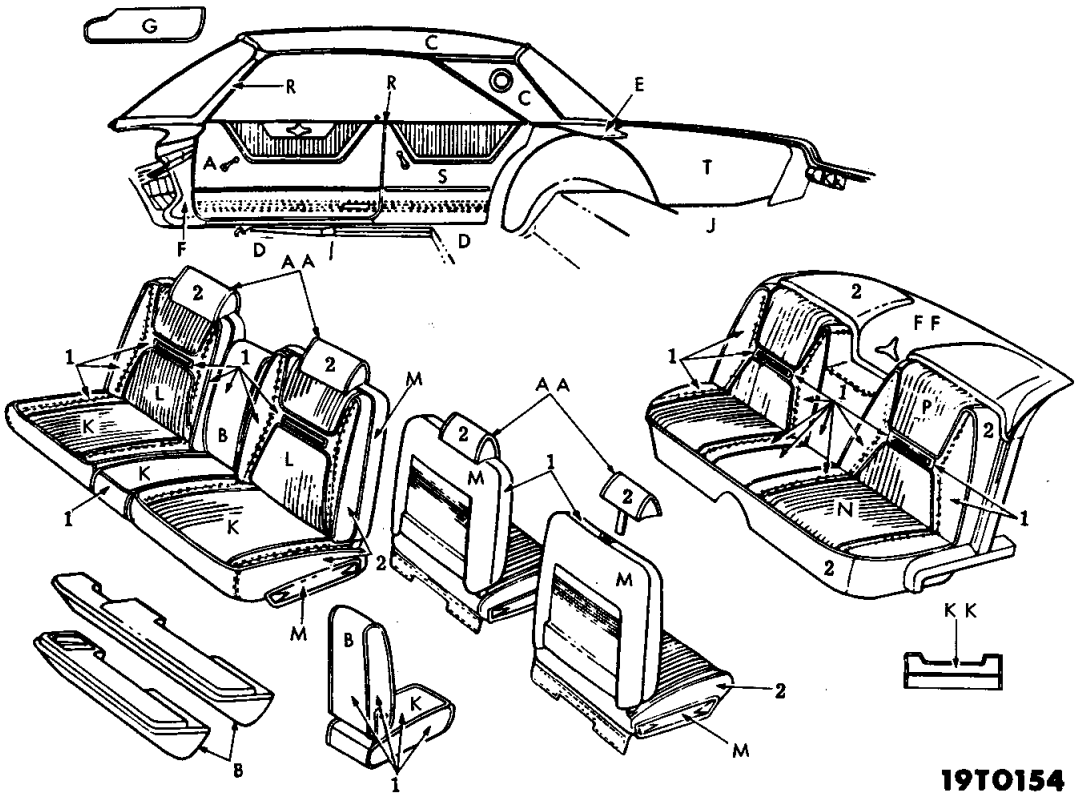

ITEM	TYPE OF MATERIAL	PART TYPE CODE	MAT'L WIDTH	PART NUMBERS AND COLORS RED	BLACK		
1	Leather	23-114-14	Hide	B0302 AR7	B0302 AX9		
2	Vinyl 35.5 oz.	23-114-15	54"	B0464 AR7	B0464 AX9		

Distribution Drawing Legend Page Appears Following Illustration Section

1965 CHRYSLER AC2-M, AC2-P 2 DOOR HARD TOP
LEATHER TRIM
CODES M3R, M3X
CODES P3R, P3X

★ Indicates use as required.
B Indicates parts not listed in any previous parts book.
September 4, 1964.

Printed in U.S.A.
Prices and specifications subject to change without notice.

MyMopar.com

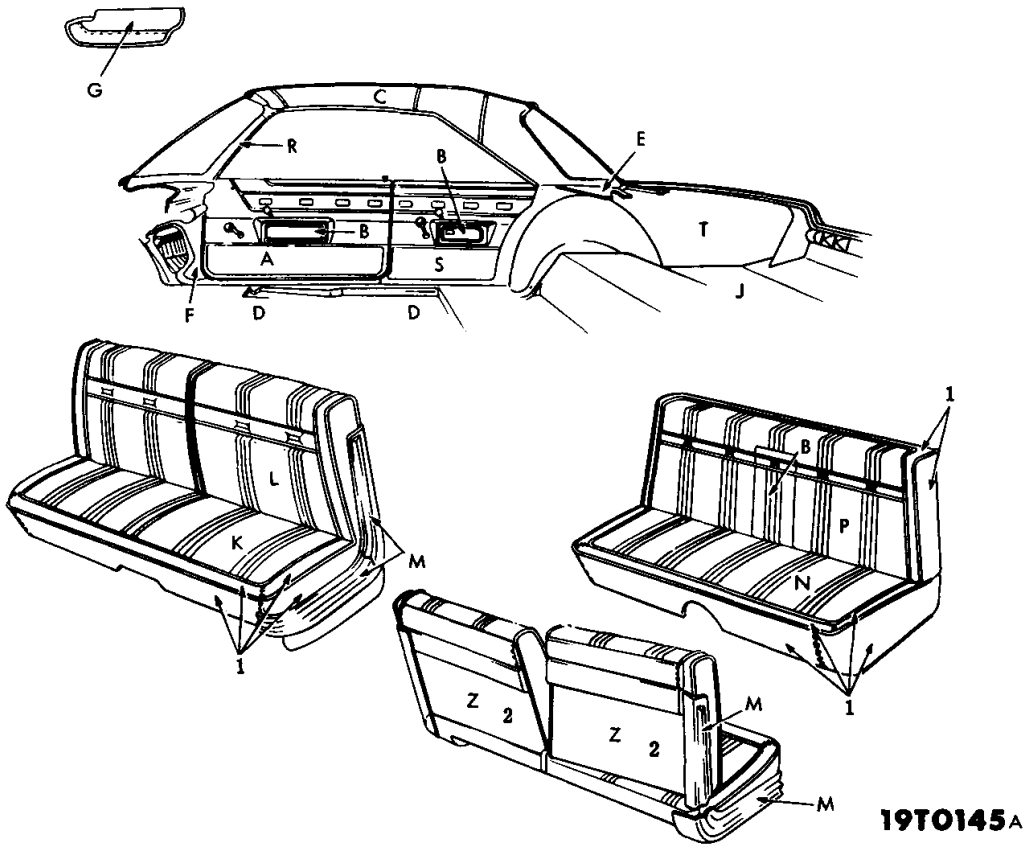

ITEM	TYPE OF MATERIAL	PART TYPE CODE	MAT'L WIDTH	PART NUMBERS AND COLORS BLUE	GOLD & BLACK	BLACK & WHITE	TURQUOISE
1	Vinyl 35.5 oz.	23-114-15	54"	0464 AB4	0464 AY3	0464 AW3	0464 AQ4
2	Vinyl 30 oz.	23-114-15	50"	0486 AB4	0486 AY3	0486 AW3	0486 AQ4

ITEM	TYPE OF MATERIAL	PART TYPE CODE	MAT'L WIDTH	PART NUMBERS AND COLORS RED	TAN		
1	Vinyl 35.5 oz.	23-114-15	54"	0464 AR7	0464 AT6		
2	Vinyl 30 oz.	23-114-15	50"	0486 AR7	0486 AT6		

Distribution Drawing Legend Page Appears Following Illustration Section

1965 CHRYSLER AC3-H 2 DOOR HARD TOP
CLOTH AND VINYL TRIM
CODES H1B, H1L, H1N, H1Q, H1R, H1T

★ Indicates use as required.
B Indicates parts not listed in any previous parts book.
* Indicates change or addition.

Printed in U.S.A.
Prices and specifications subject to change without notice.
May 1965, Supersedes Sept. 4, 1964.

MyMopar.com

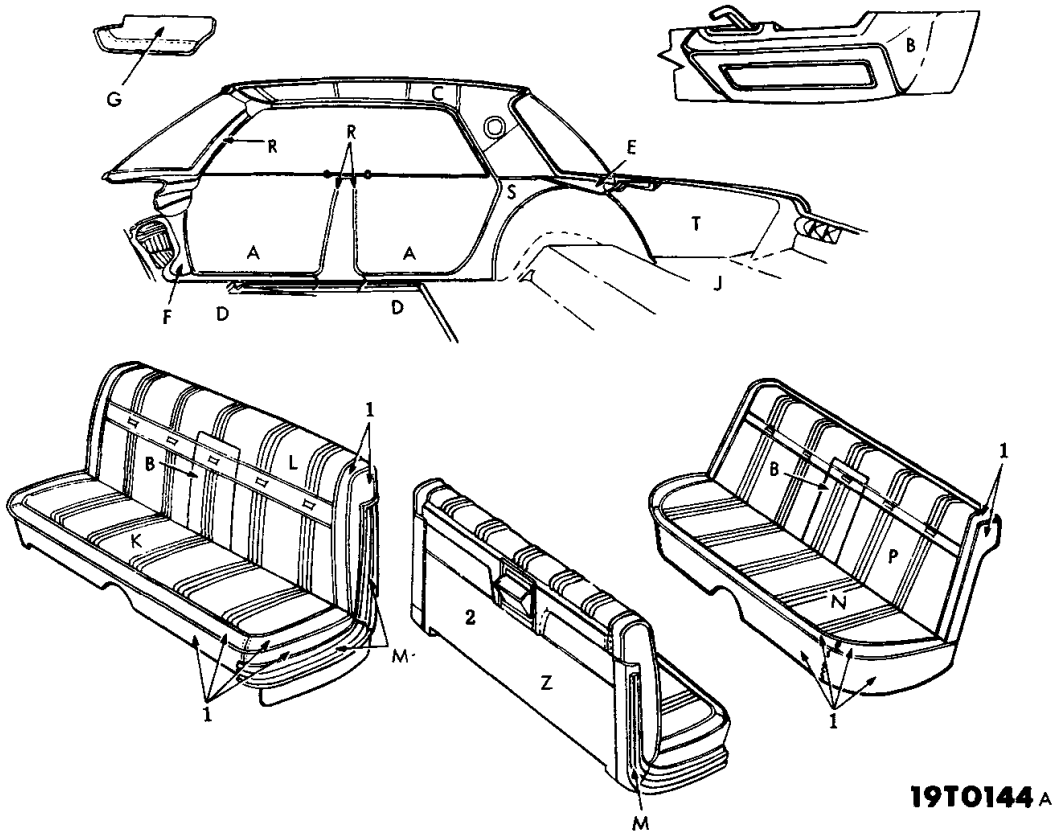

ITEM	TYPE OF MATERIAL	PART TYPE CODE	MAT'L WIDTH	PART NUMBERS AND COLORS BLUE	GOLD & BLACK	BLACK & WHITE	TURQUOISE
1	Vinyl 35.5 oz.	23-114-15	54"	0464 AB4	0464 AY3	0464 AW3	0464 AQ4
2	Vinyl 30 oz.	23-114-15	50"	0486 AB4	0486 AY3	0486 AW3	0486 AQ4

ITEM	TYPE OF MATERIAL	PART TYPE CODE	MAT'L WIDTH	PART NUMBERS AND COLORS RED	TAN		
1	Vinyl 35.5 oz.	23-114-15	54"	0464 AR7	0464 AT6		
2	Vinyl 30 oz.	23-114-15	50"	0486 AR7	0486 AT6		

Distribution Drawing Legend Page Appears Following Illustration Section

1965 CHRYSLER AC3-H 4 DOOR HARD TOP
CLOTH AND VINYL TRIM
CODES H1B, H1L, H1N, H1Q, H1R, H1T

★ Indicates use as required.
⊟ Indicates parts not listed in any previous parts book.
May 1965, Supersedes Sept. 4, 1964.

Printed in U.S.A.
Prices and specifications subject to change without notice.
*● Indicates change or addition.
MyMopar.com

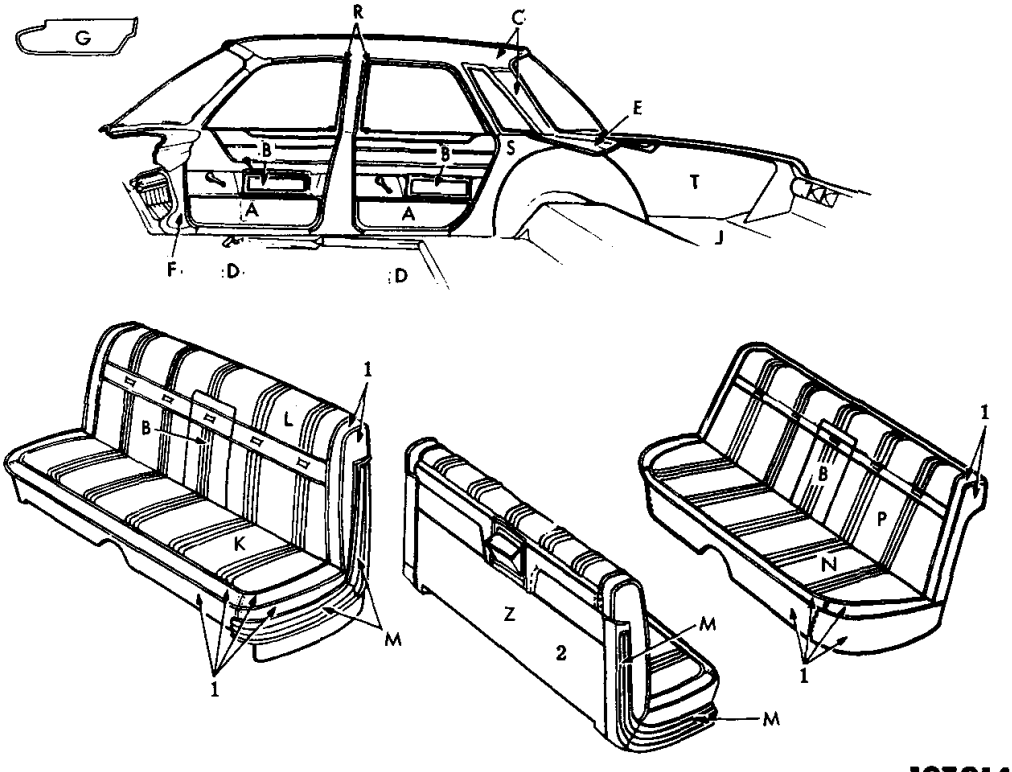

19T0143A

ITEM	TYPE OF MATERIAL	PART TYPE CODE	MAT'L WIDTH	PART NUMBERS AND COLORS			
				BLUE	GOLD & BLACK	BLACK & WHITE	TURQUOISE
1	Vinyl 35.5 oz.	23-114-15	54"	0464 AB4	0464 AY3	0464 AW3	0464 AQ4
2	Vinyl 30 oz.	23-114-15	50"	0486 AB4	0486 AY3	*0486 AW3	0486 AQ4

ITEM	TYPE OF MATERIAL	PART TYPE CODE	MAT'L WIDTH	PART NUMBERS AND COLORS			
				RED	TAN		
1	Vinyl 35.5 oz.	23-114-15	54"	0464 AR7	0464 AT6		
2	Vinyl 30 oz.	23-114-15	50"	0486 AR7	0486 AT6		

Distribution Drawing Legend Page Appears Following Illustration Section

1965 CHRYSLER AC3-H 4 DOOR 6 WINDOW SEDAN
CLOTH AND VINYL TRIM
CODES H1B, H1L, H1N, H1Q, H1R, H1T

★ Indicates use as required.
⊟ Indicates parts not listed in any previous parts book.
• Indicates change or addition.

Printed in U.S.A.
Prices and specifications subject to change without notice.
May 1965, Supersedes Sept. 4, 1964.

MyMopar.com

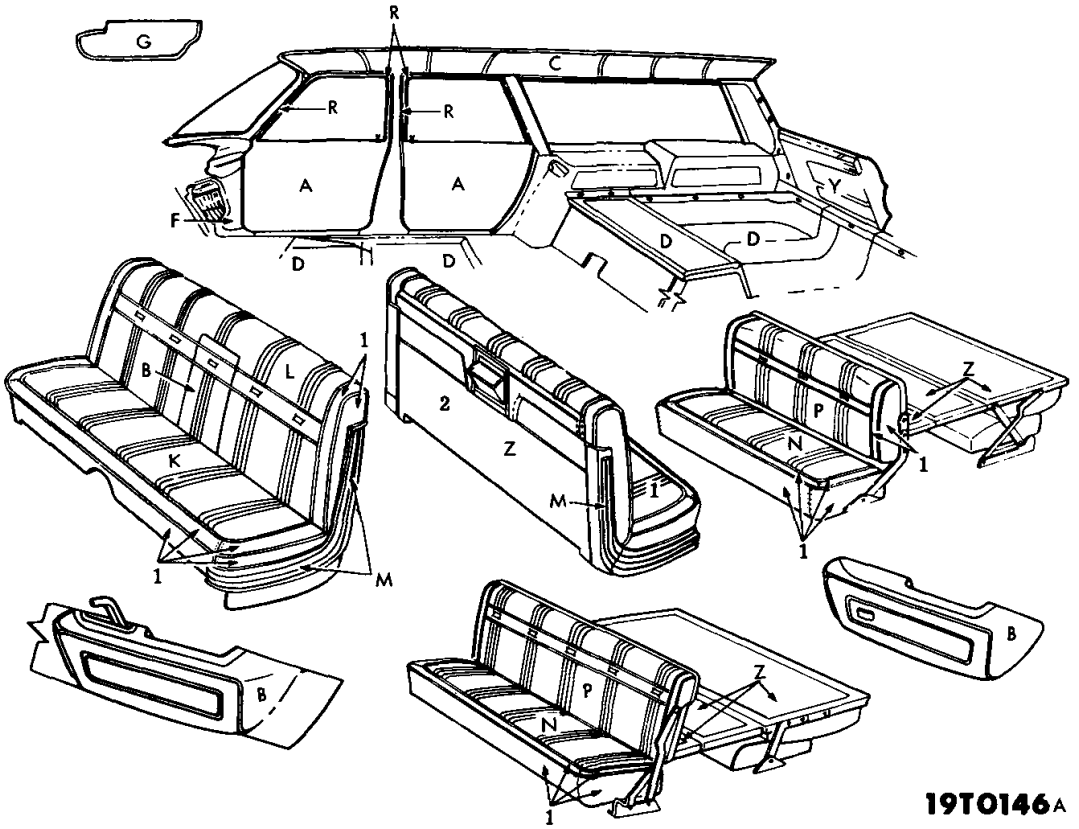

ITEM	TYPE OF MATERIAL	PART TYPE CODE	MAT'L WIDTH	PART NUMBERS AND COLORS BLUE	GOLD & BLACK	BLACK & WHITE	TURQUOISE
1	Vinyl 35.5 oz.	23-114-15	54"	0464 AB4	0464 AY3	0464 AW3	0464 AQ4
2	Vinyl 30 oz.	23-114-15	50"	0486 AB4	0486 AY3	0486 AW3	0486 AQ4

ITEM	TYPE OF MATERIAL	PART TYPE CODE	MAT'L WIDTH	PART NUMBERS AND COLORS RED	TAN		
1	Vinyl 35.5 oz.	23-114-15	54"	0464 AR7	0464 AT6		
2	Vinyl 30 oz.	23-114-15	50"	0486 AR7	0486 AT6		

Distribution Drawing Legend Page Appears Following Illustration Section

1965 CHRYSLER AC3-H STATION WAGON
CLOTH AND VINYL TRIM
CODES H1B, H1L, H1N, H1Q, H1R, H1T

★ Indicates use as required.
⊟ Indicates parts not listed in any previous parts book.
May 1965, Supersedes Sept. 4, 1964.

Printed in U.S.A.
Prices and specifications subject to change without notice.
* Indicates change or addition.

MyMopar.com

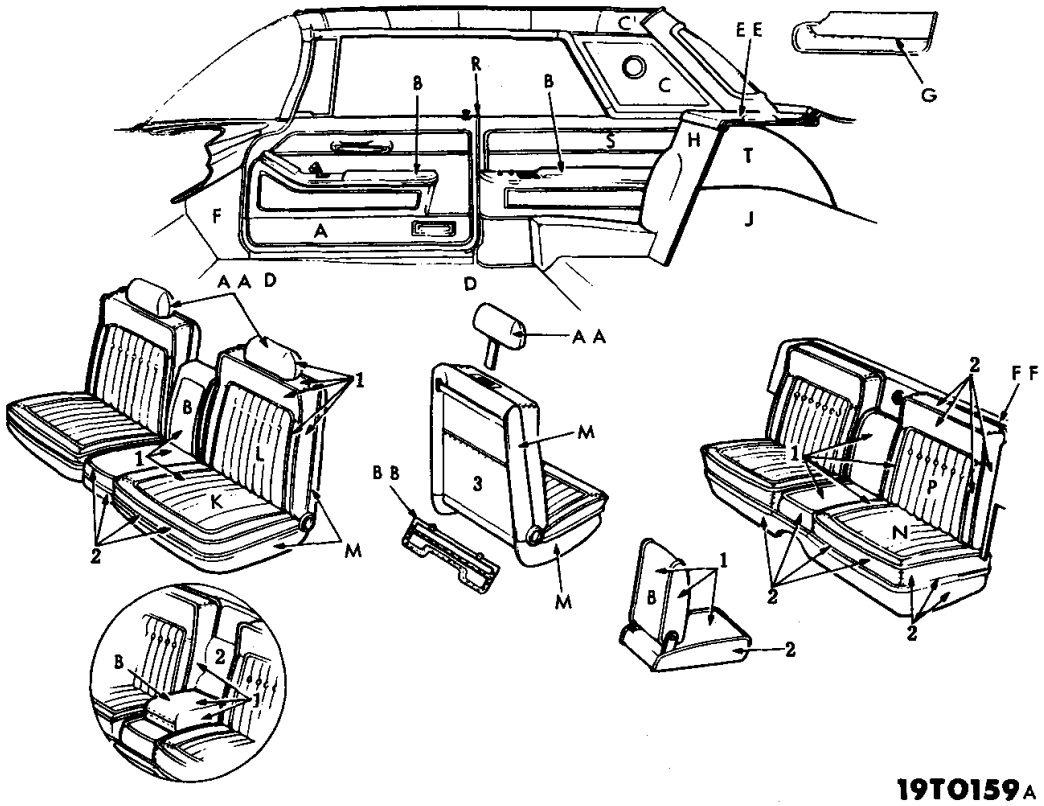

19T0159A

ITEM	TYPE OF MATERIAL	PART TYPE CODE	MAT'L WIDTH	PART NUMBERS AND COLORS BLUE	BLUE & WHITE	PURPLE	RED
1	Leather	23-114-14	Hide	0302 AB4	0302 AW3	0302 AM9	0302 AR5
2	Vinyl 35.5 oz.	23-114-15	54"	0464 AB4	0464 AW3	0464 AM9	0464 AR5
3	Vinyl 30 oz.	23-114-15	54"	0486 AB4	0486 AW3	0486 AM9	0486 AR5

ITEM	TYPE OF MATERIAL	PART TYPE CODE	MAT'L WIDTH	PART NUMBERS AND COLORS TAN	RED & WHITE	WHITE	BLACK
1	Leather	23-114-14	Hide	0302 AL3	0302 AW3	0302 AW3	0302 AX9
2	Vinyl 35.5 oz.	23-114-15	54"	0464 AL3	0464 AW3	0464 AW3	0464 AX9
3	Vinyl 30 oz.	23-114-15	54"	0486 AL3	0486 AW3	0486 AW3	0486 AX9

Distribution Drawing Legend Page Appears Following Illustration Section

1965 IMPERIAL AY1-M 2 DOOR HARD TOP
LEATHER TRIM
CODES M9B, M9C, M9K, M9R, M9T, M9V, M9W, M9X

MyMopar.com

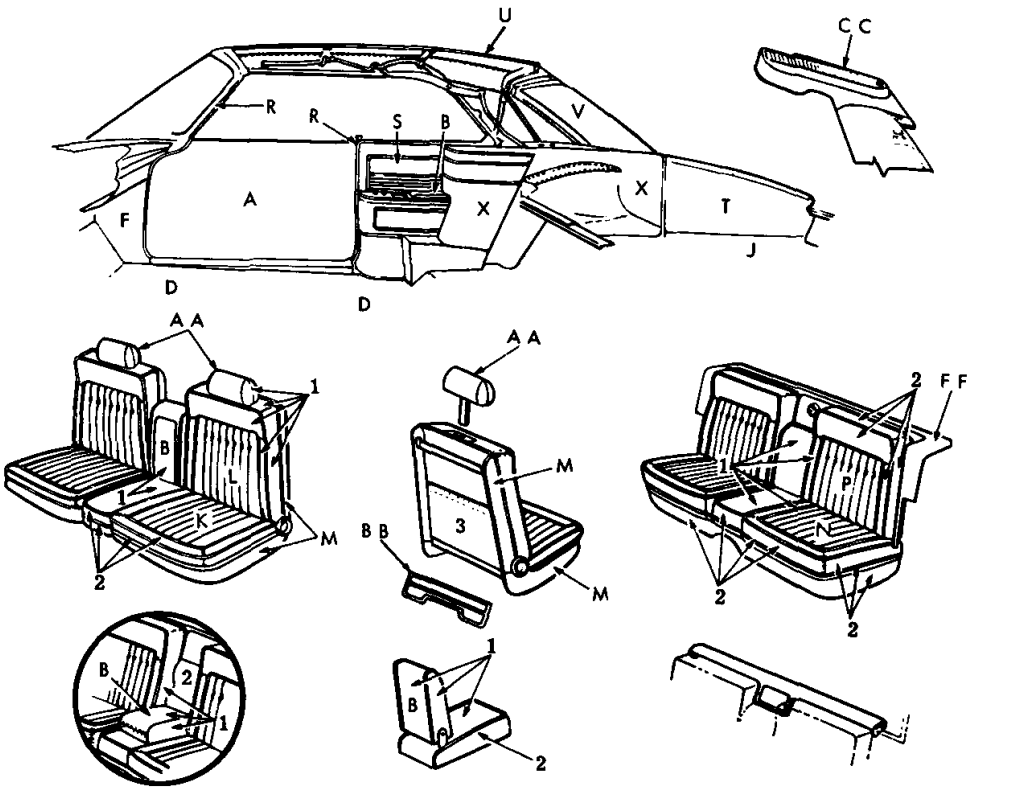

19T0160A

ITEM	TYPE OF MATERIAL	PART TYPE CODE	MAT'L WIDTH	PART NUMBERS AND COLORS BLUE	BLUE & WHITE	PURPLE	RED
1	Leather	23-114-14	Hide	0302 AB4	0302 AW3	0302 AM9	0302 AR5
2	Vinyl 35.5 oz.	23-114-15	54"	0464 AB4	0464 AW3	0464 AM9	0464 AR5
3	Vinyl 30 oz.	23-114-15	54"	0486 AB4	0486 AW3	0486 AM9	0486 AR5

ITEM	TYPE OF MATERIAL	PART TYPE CODE	MAT'L WIDTH	PART NUMBERS AND COLORS TAN	RED & WHITE	WHITE	BLACK
1	Leather	23-114-14	Hide	0302 AL3	0302 AW3	0302 AW3	0302 AX9
2	Vinyl 35.5 oz.	23-114-15	54"	0464 AL3	0464 AW3	0464 AW3	0464 AX9
3	Vinyl 30 oz.	23-114-15	54"	0486 AL3	0486 AW3	0486 AW3	0486 AX9

Distribution Drawing Legend Page Appears Following Illustration Section

1965 IMPERIAL AY1-M CONVERTIBLE
LEATHER TRIM
CODES M9B, M9C, M9V, M9W, M9K, M9R, M9T, M9V, M9X

MyMopar.com

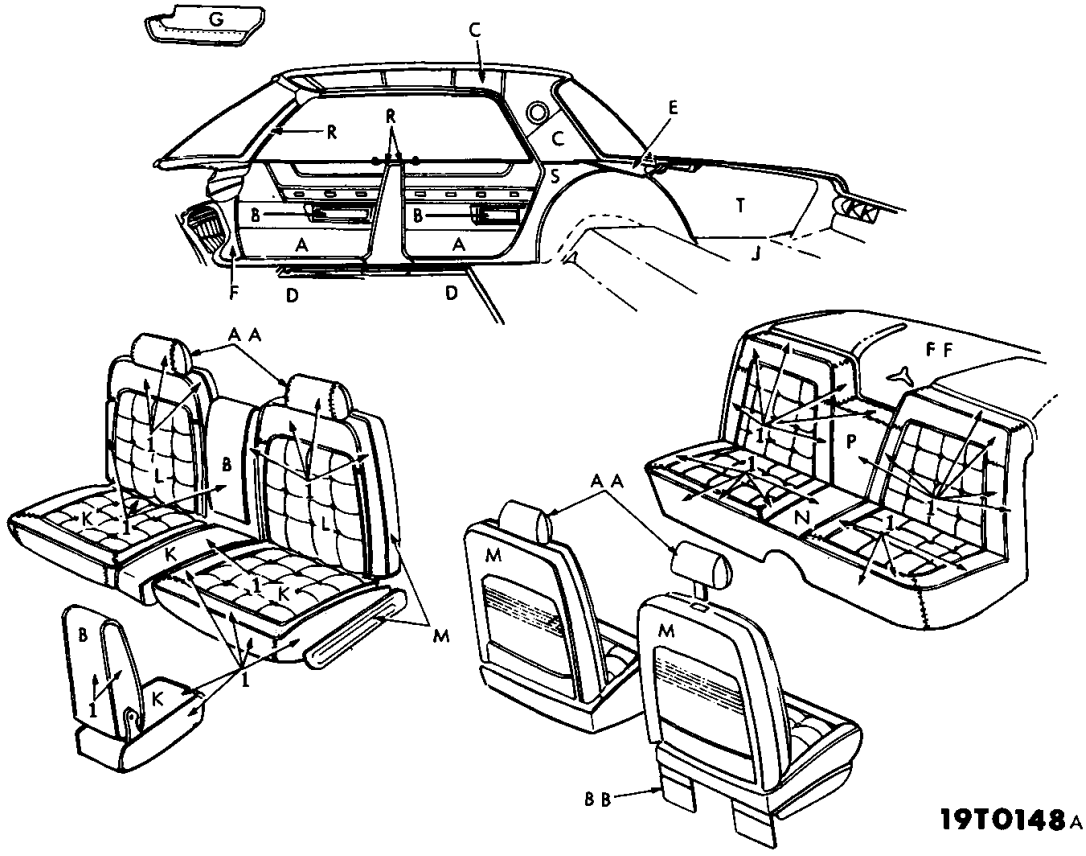

ITEM	TYPE OF MATERIAL	PART TYPE CODE	MAT'L WIDTH	PART NUMBERS AND COLORS BLUE	GOLD & BLACK	RED	TAN
1	Vinyl 35.5 oz.	23-114-15	54"	0464 AB4	0464 AY3	0464 AR7	0464 AT6

ITEM	TYPE OF MATERIAL	PART TYPE CODE	MAT'L WIDTH	PART NUMBERS AND COLORS BLACK			
1	Vinyl 35.5 oz.	23-114-15	54"	0464 AX9			

Distribution Drawing Legend Page Appears Following Illustration Section

1965 CHRYSLER AC3-H 4 DOOR HARD TOP
VINYL TRIM
CODES H4B, H4L, H4R, H4T, H4X

★ Indicates use as required.
⊟ Indicates parts not listed in any previous parts book.

Printed in U.S.A.
Prices and specifications subject to change without notice.
May 1965, Supersedes Sept. 4, 1964.

MyMopar.com

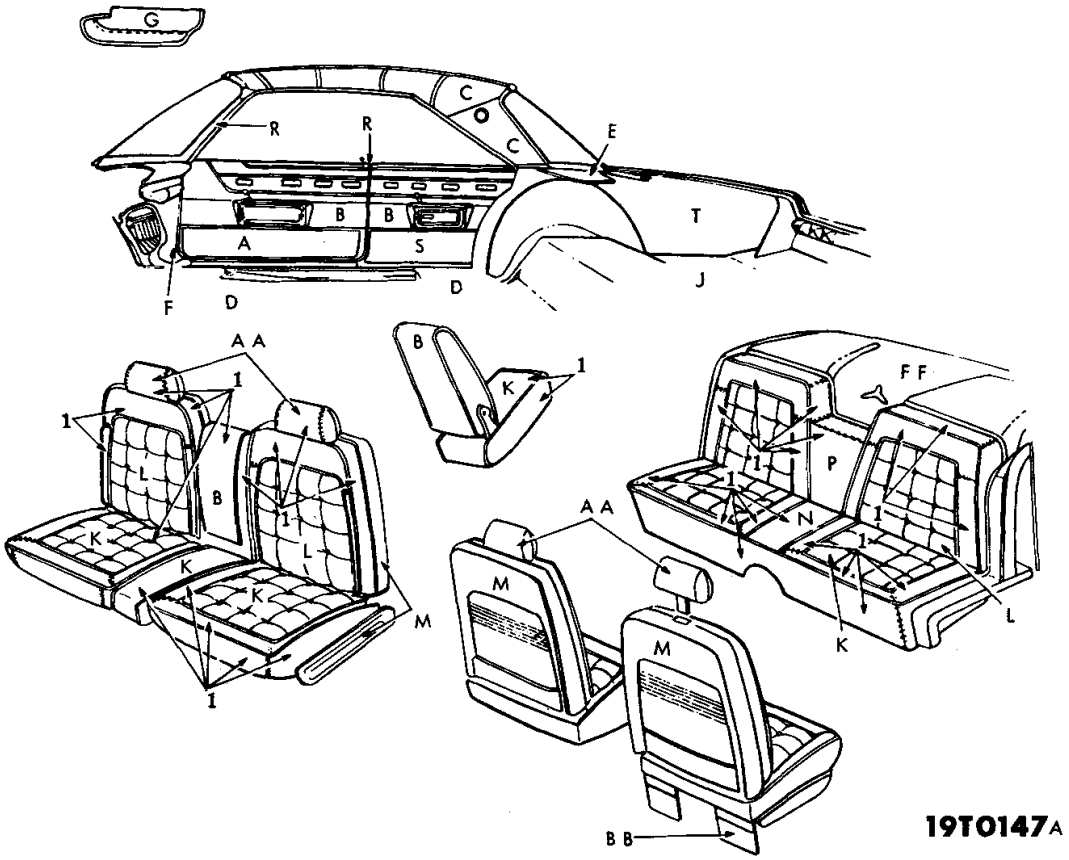

ITEM	TYPE OF MATERIAL	PART TYPE CODE	MAT'L WIDTH	PART NUMBERS AND COLORS BLUE	GOLD & BLACK	RED	TAN
1	Vinyl 35.5 oz.	23-114-15	54"	0464 AB4	0464 AY3	0464 AR7	0464 AT6

ITEM	TYPE OF MATERIAL	PART TYPE CODE	MAT'L WIDTH	PART NUMBERS AND COLORS BLACK			
1	Vinyl 35.5 oz.	23-114-15	54"	0464 AX9			

Distribution Drawing Legend Page Appears Following Illustration Section

1965 CHRYSLER AC3-H 2 DOOR HARD TOP
VINYL TRIM
CODES H4B, H4L, H4R, H4T, H4X

★ Indicates use as required.
⊟ Indicates parts not listed in any previous parts book.
May 1965, Supersedes Sept. 4, 1964.

Printed in U.S.A.
Prices and specifications subject to change without notice.

MyMopar.com

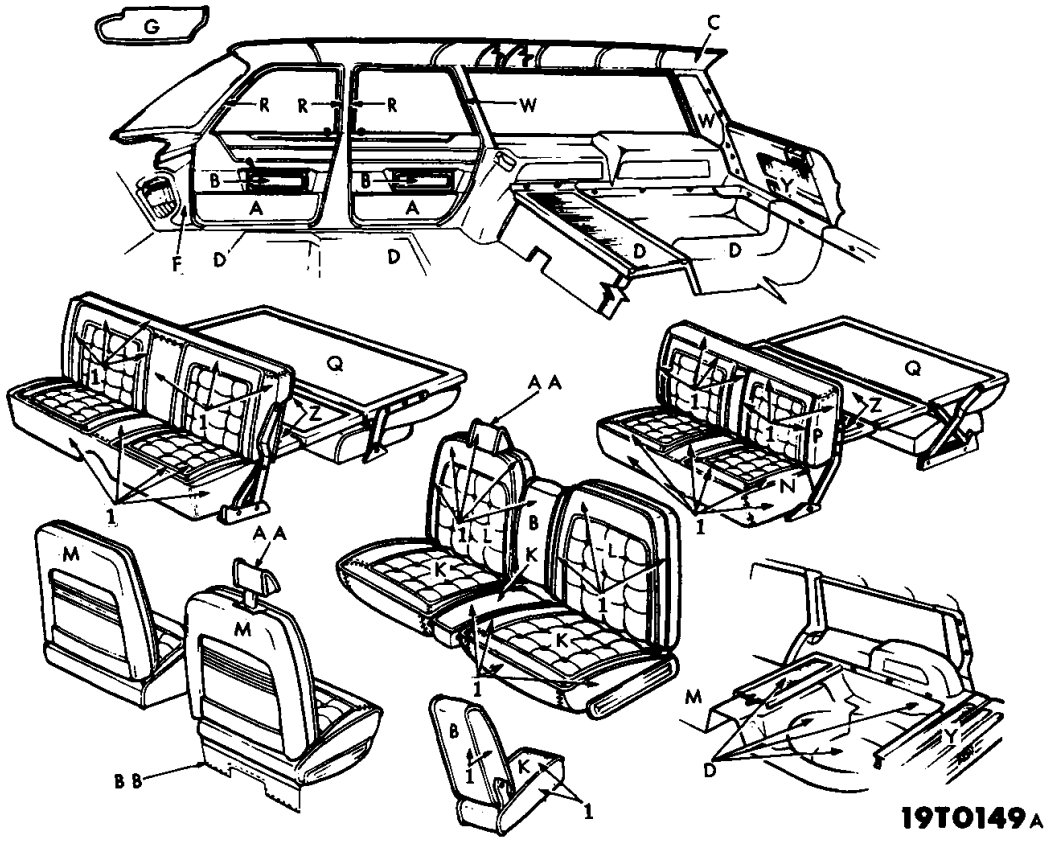

ITEM	TYPE OF MATERIAL	PART TYPE CODE	MAT'L WIDTH	PART NUMBERS AND COLORS BLUE	GOLD & BLACK	RED	TAN
1	Vinyl 35.5 oz.	23-114-15	54"	0464 AB4	0464 AY3	0464 AR7	0464 AT6

ITEM	TYPE OF MATERIAL	PART TYPE CODE	MAT'L WIDTH	PART NUMBERS AND COLORS BLACK			
1	Vinyl 35.5 oz.	23-114-15	54"	0464 AX9			

Distribution Drawing Legend Page Appears Following Illustration Section

1965 CHRYSLER AC3-H STATION WAGON
VINYL TRIM
CODES H4B, H4L, H4R, H4T, H4X

★ Indicates use as required.
⊟ Indicates parts not listed in any previous parts book.

Printed in U.S.A.
Prices and specifications subject to change without notice.
May 1965, Supersedes Sept. 4, 1964.
MyMopar.com

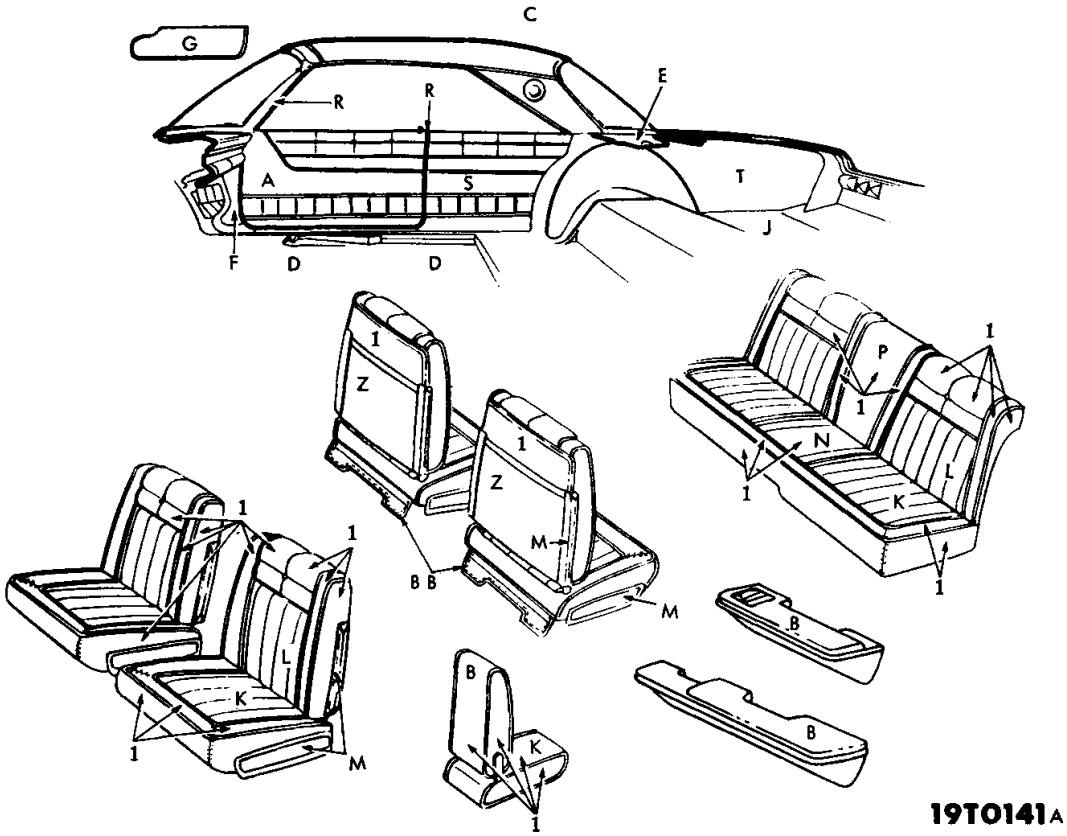

				PART NUMBERS AND COLORS			
ITEM	TYPE OF MATERIAL	PART TYPE CODE	MAT'L WIDTH	BLUE	RED	BLACK	
1	Vinyl 35.5 oz.	23-114-15	54"	0464 AB4	0464 AR7	0464 AX9	

Distribution Drawing Legend Page Appears Following Illustration Section

1965 CHRYSLER AC1-L 2 DOOR HARD TOP
VINYL TRIM
CODES L9B, L9R, L9X

MyMopar.com

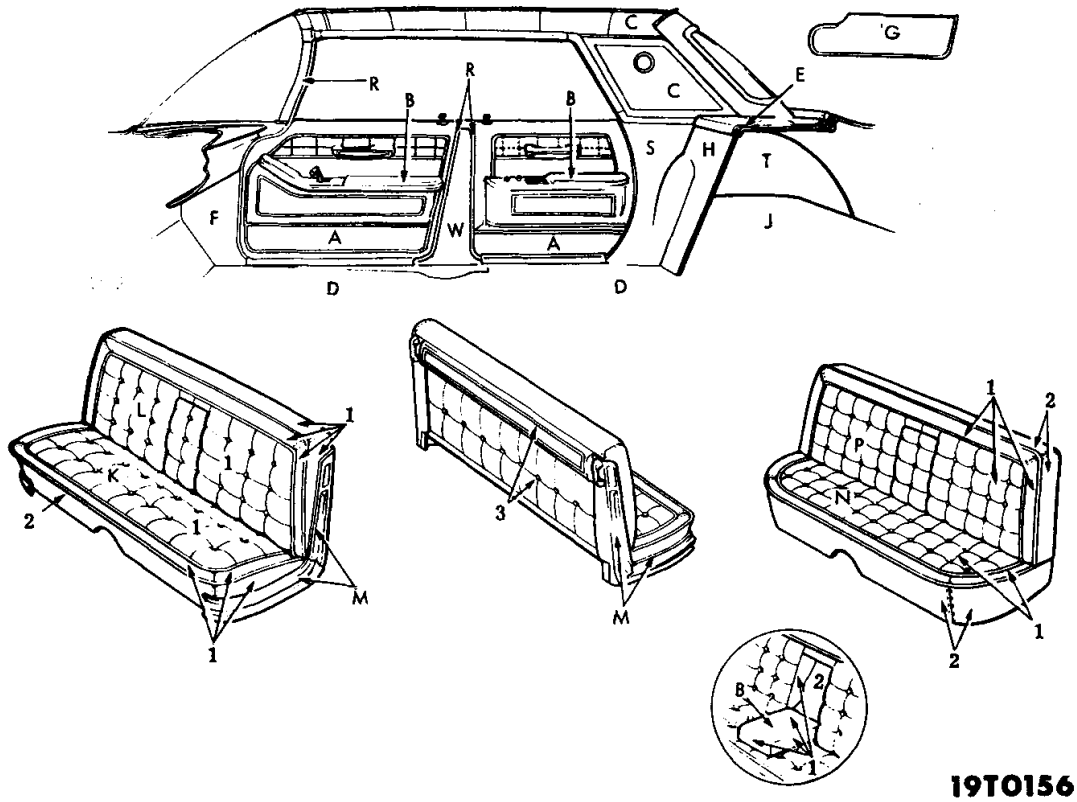

ITEM	TYPE OF MATERIAL	PART TYPE CODE	MAT'L WIDTH	PART NUMBERS AND COLORS BLUE	BLUE & WHITE	PURPLE	RED
1	Leather	23-114-14	Hide	⊟0302 AB4	⊟0302 AW3	⊟0302 AM9	⊟0302 AR5
2	Vinyl 35.5 oz.	23-114-15	54"	⊟0464 AB4	⊟0464 AW3	⊟0464 AM9	⊟0464 AR5
3	Vinyl 30 oz.	23-114-15	50"	⊟0486 AB4	⊟0486 AW3	⊟0486 AM9	⊟0486 AR5

ITEM	TYPE OF MATERIAL	PART TYPE CODE	MAT'L WIDTH	PART NUMBERS AND COLORS TAN	RED & WHITE	WHITE	BLACK
1	Leather	23-114-14	Hide	⊟0302 AL3	⊟0302 AW3	⊟0302 AW3	⊟0302 AX9
2	Vinyl 35.5 oz.	23-114-15	54"	⊟0464 AL3	⊟0464 AW3	⊟0464 AW3	⊟0464 AX9
3	Vinyl 30 oz.	23-114-15	50"	⊟0486 AL3	⊟0486 AW3	⊟0486 AW3	⊟0486 AX9

Distribution Drawing Legend Page Appears Following Illustration Section

1965 IMPERIAL AY1-M 4 DOOR HARD TOP
LEATHER TRIM
CODES M3B, M3C, M3K, M3R, M3T, M3V, M3W, M3X

★ Indicates use as required.
⊟ Indicates parts not listed in any previous parts book.

MyMopar.com

Printed in U.S.A.
Prices and specifications subject to change without notice.
September 4, 1964.

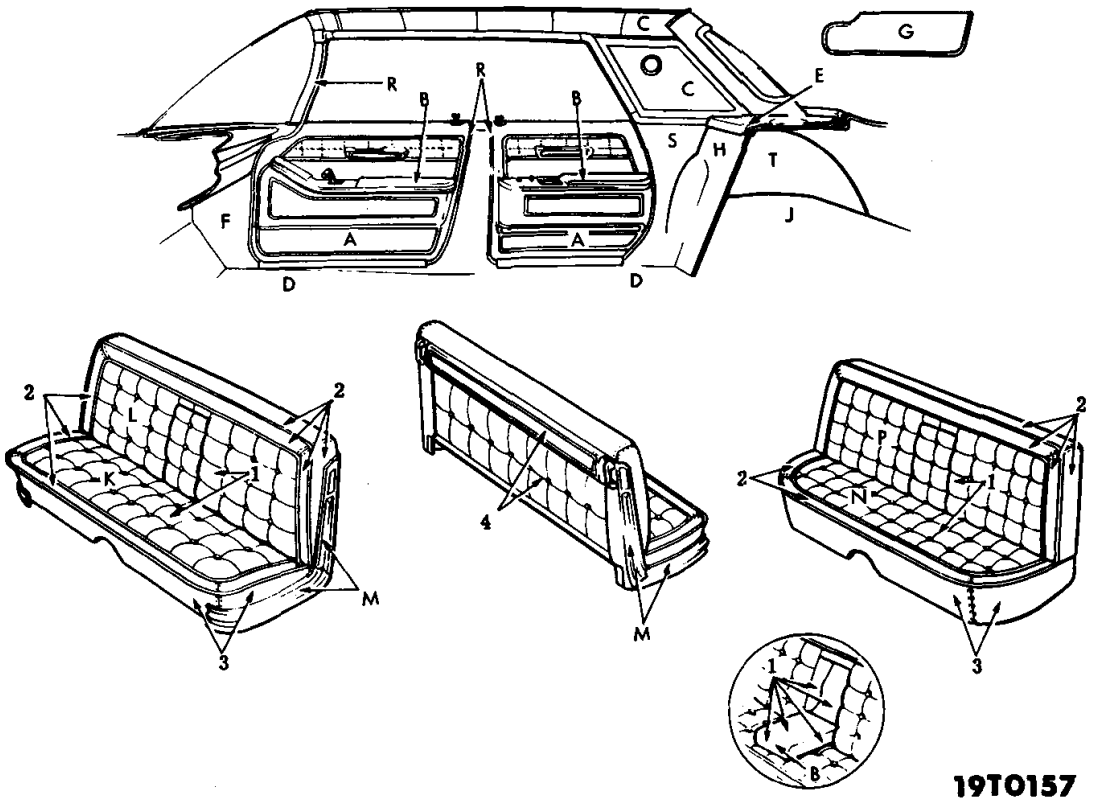

ITEM	TYPE OF MATERIAL	PART TYPE CODE	MAT'L WIDTH	PART NUMBERS AND COLORS: BLUE	GREEN & GOLD	BLACK & WHITE	GRAY & BLACK
1	Body Cloth	23-114-2	60"	B0118 AB4	B0118 AL3	B0118 AX8	B0118 AA3
2	Leather	23-114-14	Hide	B0302 AB4	B0302 AF9	B0302 AW3	B0302 AX9
3	Vinyl 35.5 oz.	23-114-15	54"	B0464 AB4	B0464 AF9	B0464 AW3	B0464 AX9
4	Vinyl 30 oz.	23-114-15	50"	B0486 AB4	B0486 AF9	B0486 AW3	B0486 AX9

ITEM	TYPE OF MATERIAL	PART TYPE CODE	MAT'L WIDTH	PART NUMBERS AND COLORS: TURQUOISE	RED	TAN	
1	Body Cloth	23-114-2	60"	B0118 AQ4	B0118 AR5	B0118 AL3	
2	Leather	23-114-14	Hide	B0302 AQ4	B0302 AR5	B0302 AL3	
3	Vinyl 35.5 oz.	23-114-15	54"	B0464 AQ4	B0464 AR5	B0464 AL3	
4	Vinyl 30 oz.	23-114-15	50"	B0486 AQ4	B0486 AR5	B0486 AL3	

Distribution Drawing Legend Page Appears Following Illustration Section

1965 IMPERIAL AY1-M 4 DOOR HARD TOP
CLOTH AND LEATHER TRIM
CODES M7B, M7E, M7N, M7P, M7Q, M7R, M7T

★ Indicates use as required.
B Indicates parts not listed in any previous parts book.
September 4, 1964.

MyMopar.com

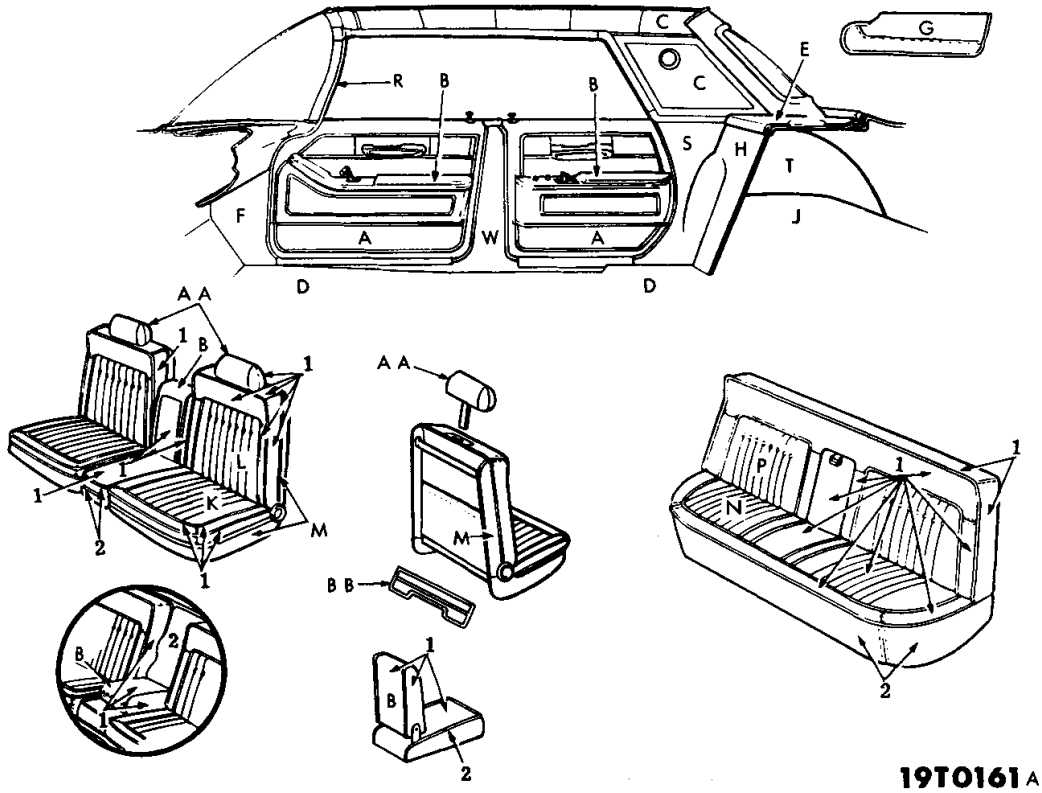

ITEM	TYPE OF MATERIAL	PART TYPE CODE	MAT'L WIDTH	PART NUMBERS AND COLORS RED	WHITE	BLACK	
1	Leather	23-114-14	Hide	0302 AR5	0302 AW3	0302 AX9	
2	Vinyl 35.5 oz.	23-114-15	54"	0464 AR5	0464 AW3	0464 AX9	

Distribution Drawing Legend Page Appears Following Illustration Section

1965 IMPERIAL AY1-M, AY1-H 4 DOOR HARD TOP
LEATHER TRIM
CODES M5R, H8R, M5W, H8W, M5X, H8X

★ Indicates use as required.
⊟ Indicates parts not listed in any previous parts book.

Printed in U.S.A.
Prices and specifications subject to change without notice.

MyMopar.com

May 1965, Supersedes Sept. 4, 1964.

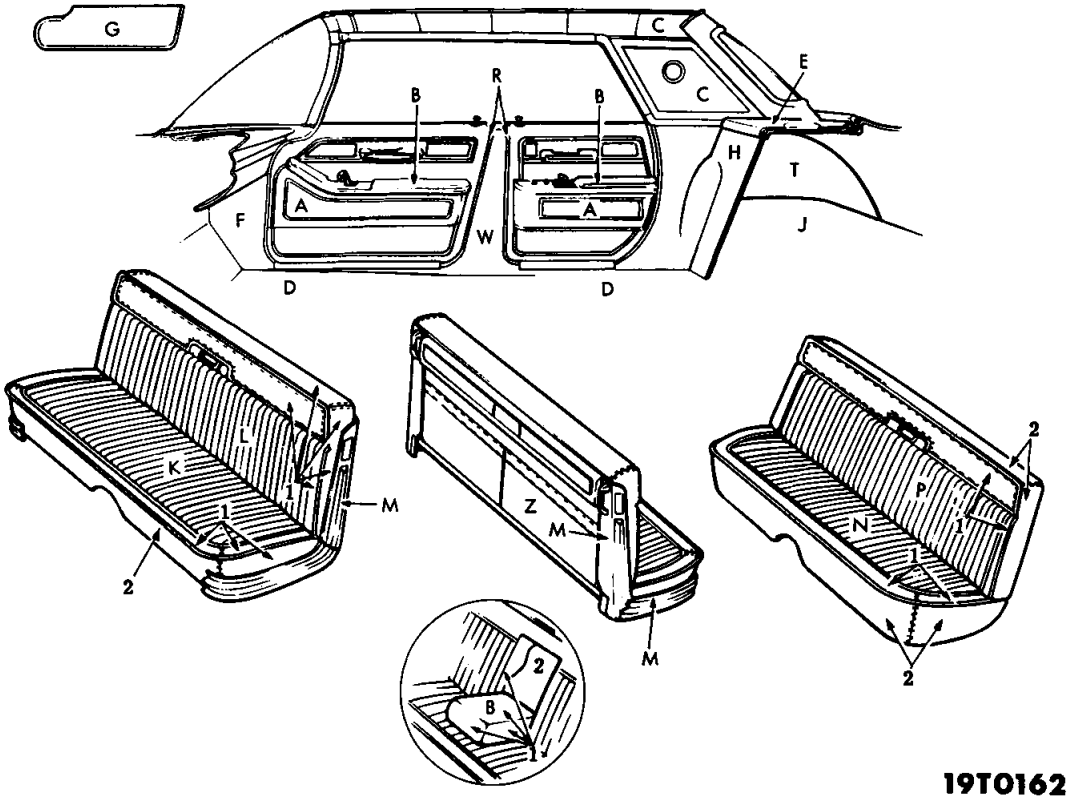

19T0162A

ITEM	TYPE OF MATERIAL	PART TYPE CODE	MAT'L WIDTH	PART NUMBERS AND COLORS BLUE	BLUE & WHITE	RED	RED & WHITE
1	Leather	23-114-14	Hide	0302 AB4	0302 AW3	0302 AR5	0302 AW3
2	Vinyl 35.5 oz.	23-114-15	54"	0464 AB4	0464 AW3	0464 AR5	0464 AW3

ITEM	TYPE OF MATERIAL	PART TYPE CODE	MAT'L WIDTH	PART NUMBERS AND COLORS WHITE	BLACK		
1	Leather	23-114-14	Hide	0302 AW3	0302 AX9		
2	Vinyl 35.5 oz.	23-114-15	54"	0464 AW3	0464 AX9		

Distribution Drawing Legend Page Appears Following Illustration Section

1965 IMPERIAL AY1-H 4 DOOR HARD TOP
LEATHER TRIM
CODES H3B, H3C, H3R, H3V, H3W, H3X

MyMopar.com

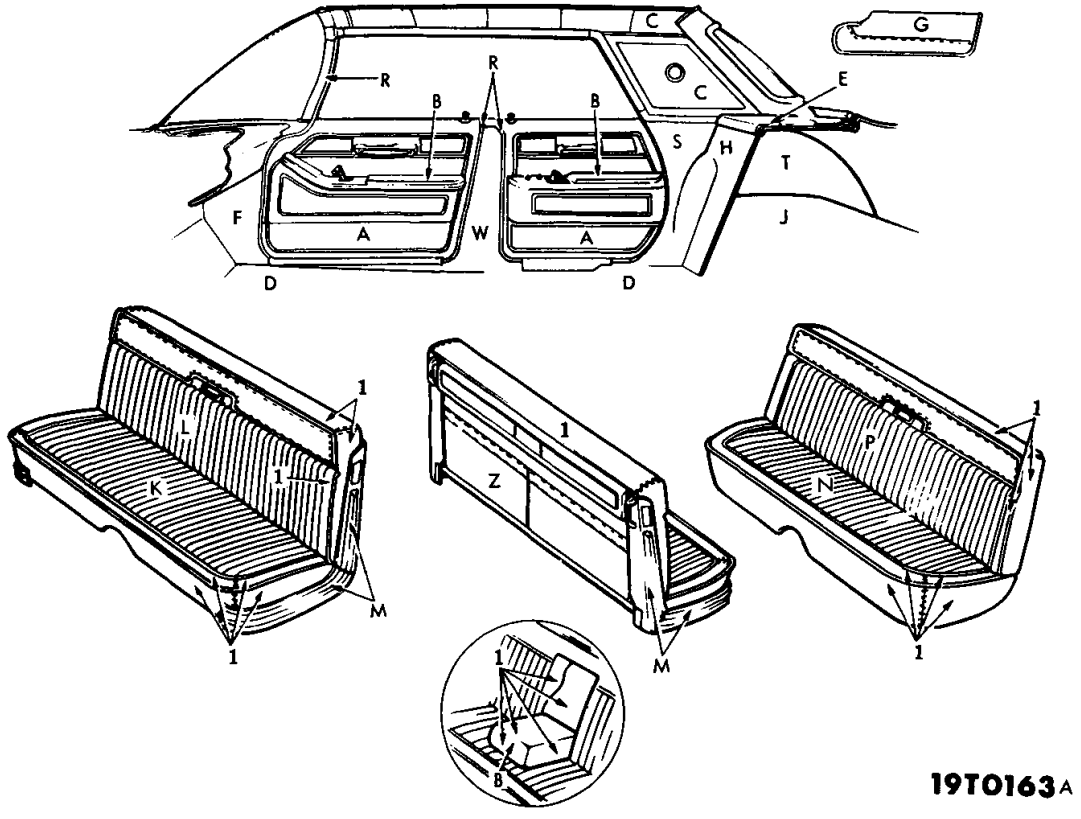

ITEM	TYPE OF MATERIAL	PART TYPE CODE	MAT'L WIDTH	PART NUMBERS AND COLORS GRAY			
1	Body Cloth	23-114-2	62"	0119 AA4			

Distribution Drawing Legend Page Appears Following Illustration Section

1965 IMPERIAL AY1-H 4 DOOR HARD TOP
CLOTH TRIM
CODE H6A

★ Indicates use as required.
⊟ Indicates parts not listed in any previous parts book.

Printed in U.S.A.
Prices and specifications subject to change without notice.
May 1965, Supersedes Sept. 4, 1964.
MyMopar.com

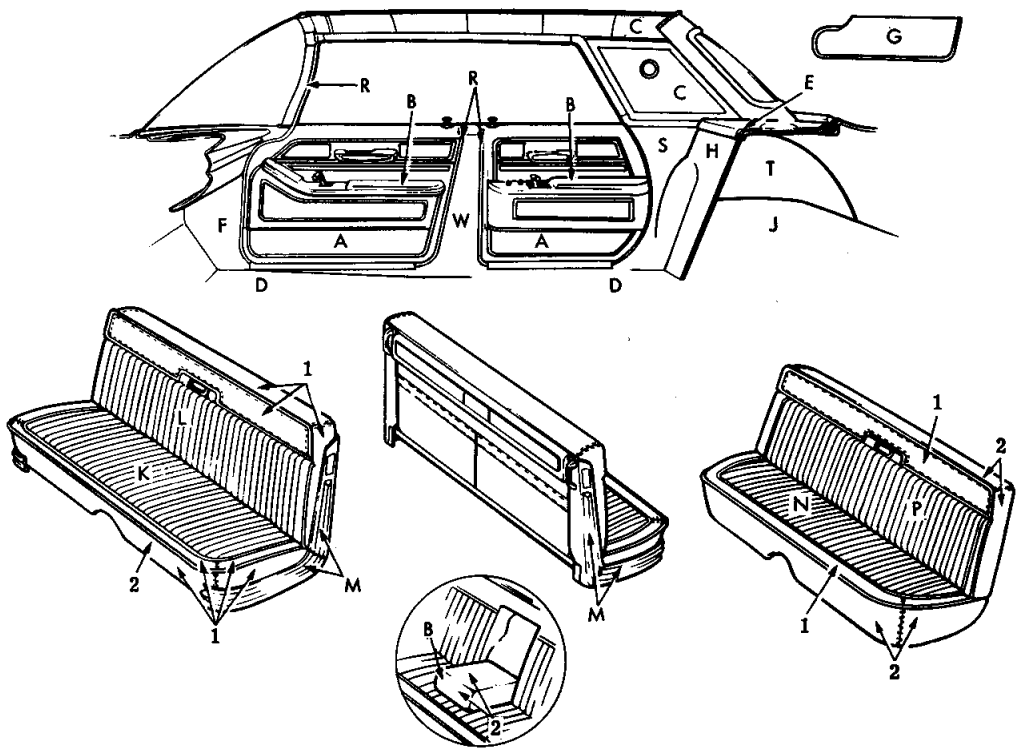

19T0164A

ITEM	TYPE OF MATERIAL	PART TYPE CODE	MAT'L WIDTH	PART NUMBERS AND COLORS GRAY	BLUE	GREEN & GOLD	TAN
1	Leather	23-114-14	Hide	0302 AA3	0302 AB4	0302 AF9	0302 AL3
2	Vinyl 35.5 oz.	23-114-15	54"	0464 AA3	0464 AB4	0464 AF9	0464 AL3

Distribution Drawing Legend Page Appears Following Illustration Section

1965 IMPERIAL AY1-H 4 DOOR HARD TOP
CLOTH AND LEATHER TRIM
CODES H7A, H7B, H7G, H7T

★ Indicates use as required.
B Indicates parts not listed in any previous parts book.
May 1965, Supersedes Sept. 4, 1964.

Printed in U.S.A.
Prices and specifications subject to change without notice.
* Indicates change or addition.

MyMopar.com

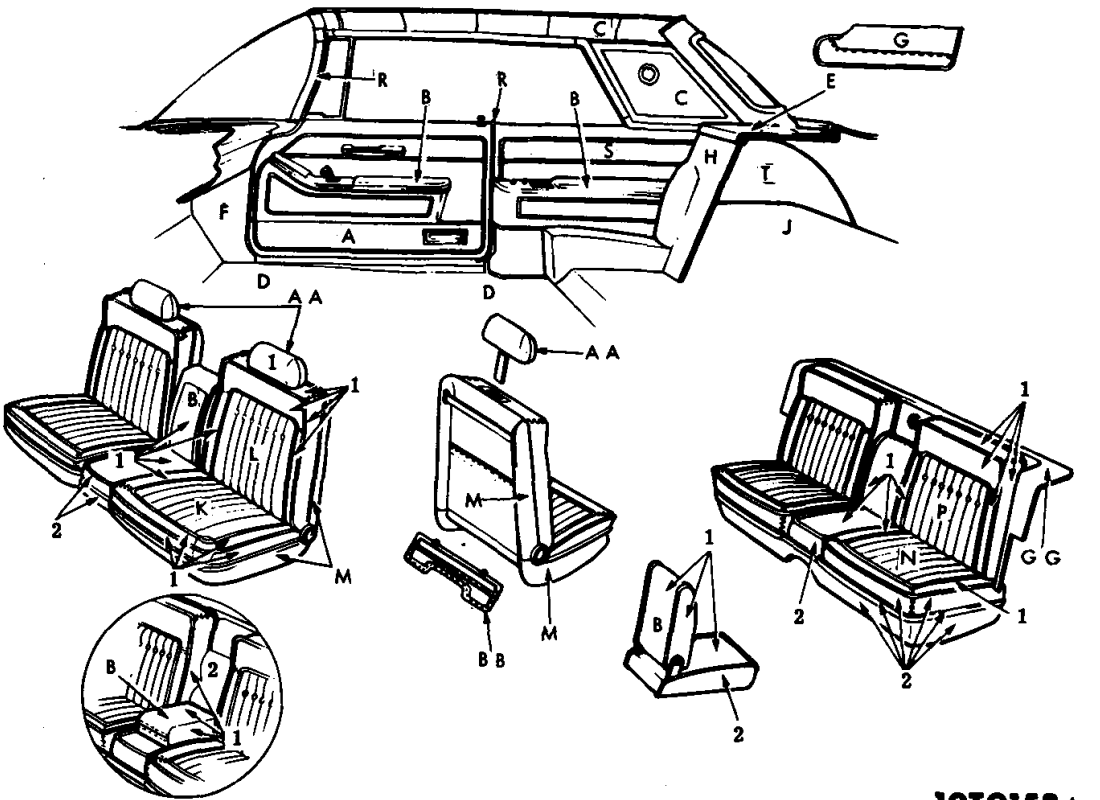

19T0158 A

ITEM	TYPE OF MATERIAL	PART TYPE CODE	MAT'L WIDTH	PART NUMBERS AND COLORS: BLUE	GREEN & GOLD	BLACK & WHITE	
1	Leather	23-114-14	Hide	0302 AB4	0302 AF9	0302 AW3	
2	Vinyl 35.5 oz.	23-114-15	54"	0464 AB4	0464 AF9	0464 AW3	

Distribution Drawing Legend Page Appears Following Illustration Section

1965 IMPERIAL AY1-M 2 DOOR HARD TOP
CLOTH AND LEATHER TRIM
CODES M8B, M8G, M8N

MyMopar.com

1965 CHRYSLER-IMPERIAL - A SERIES

Distribution Drawing Legend

See Illustration For Letter Identification

Letter	Description	Code
A	Panel, Door Trim	23-92-5
B	Arm Rest, Front Door Pad & Plate	23-76-11
	Base	23-76-9
	Arm Rest, Rear Door Pad & Plate	23-76-63
	Base	23-76-9
	Arm Rest, Rear Quarter Pad & Plate	23-76-76
	Base	23-76-9
	Arm Rest, Front Seat Back Center	23-76-34
	Rear Seat Back Center	23-76-40
C	Headlining	23-86-3
D	Floor Cover, Front, Carpet	23-79-3
	Rear, Carpet	23-79-33
E	Panel, Shelf Trim	23-102-3
F	Panel, Cowl Trim	23-91-6
G	Visor	23-103-3
H	Panel, Luggage Compartment Front	23-96-3
J	Carpet, Luggage Compartment Floor	23-20-29
K	Cover, Front Seat Cushion	23-108-5
L	Cover, Front Seat Back	23-108-16
M	Shield, Front Seat Side or Back	23-108-98
N	Cover, Rear Seat Cushion	23-109-36
P	Cover, Rear Seat Back	23-109-4
Q	Insert, Rear Seat Cushion Bottom Panel	23-109-40
R	Weathercord, Door	23-113-2
	Hinge Pillar	23-113-25
	Lock Pillar	23-113-30
S	Panel, Quarter Trim	23-101-3
T	Panel or Cover, Luggage Compt. Side Lining	23-96-8
U	Top Deck and Side Quarter	23-112-108
V	Curtain, Folding Top Back	23-112-45
W	Cover, Center Pillar	23-99-4
	Cover, Rear Upper Pillar	23-99-38
X	Well, Pocket Panel, Pocket Panel Cover, Pocket Shelf Panel, Folding Top	23-112-153
Y	Insert, Tailgate Inside Panel	23-79-79
Z	Insert, Rear Seat Back Panel	23-109-5
	Insert, Front Seat Back Panel	23-108-32
AA	Headrest	23-108-19
BB	Flap, Front Seat Cushion Rear	23-108-6
CC	Boot, Folding Top Dust	23-112-12
FF	Shroud, Rear Seat Back	23-109-11

MyMopar.com

BODY CODE	COLUMN LEGEND
	NEWPORT (AC1-L)
C-13 (41)	4 D. Sedan
C-18 (42)	4 D. Sedan (6 Window)
C-14 (43)	4 D. Hard Top
C-56 (45)	Station Wagon (6 Pass.)
C-57 (46)	Station Wagon (9 Pass.)
C-57 (46)	Station Wagon (9 Pass.)
C-12 (23)	2 D. Hard Top
C-15 (27)	Convertible
	CHRYSLER 300 (AC2-M)
C-24 (43)	4 D. Hard Top
C-22 (23)	2 D. Hard Top
C-25 (27)	Convertible
	CHRYSLER C-300L (AC2-P)
C-42 (23)	2 D. Hard Top
C-45 (27)	Convertible
	NEW YORKER (AC3-H)
C-38 (42)	4 D. Sedan (6 window)
C-34 (43)	4 D. Hard Top
C-76 (45)	Station Wagon (6 Pass.)
C-77 (46)	Station Wagon (9 Pass.)
C-32 (23)	2 D. Hard Top
	CROWN IMPERIAL (AY1-M)
Y-24 (43)	4 D. Hard Top
Y-22 (23)	2 D. Hard Top
Y-25 (27)	Convertible
	LE BARON (AY1-H)
Y-34 (43)	4 D. Hard Top

CONVERTIBLE TOP COLOR LEGEND

1 Blue	2 White	0 Black	3 Tan

STARTING SERIAL NUMBERS

		Detroit Built	Delaware Built
AC1-L	(Newport)	C-153-100001	C-156-100001
AC1-L	(Newport Station Wagon)	C-553-100001	C-556-100001
AC2-M	(306)	C-253-100001	C-256-100001
AC2-P	(C-300L)	C-453-100001	C-456-100001
AC3-H	(New Yorker)	C-353-100001	C-356-100001
AC3-H	(New Yorker Station Wagon)	C-753-100001	C-756-100001
AY1-M	Imperial Crown	I-253-100001	
AY1-H	(Imperial Le Baron)	I-353-100001	

● Indicates use as required.
⊟ Indicates parts not listed in any previous parts book.

MyMopar.com

TRIM CODE	MODEL	MATERIAL Cloth	Vinyl	Leather	COLOR	6WD. SED.	SED	4D H.T	STA. WGN.	2D H.T	CV. CP.
L1B, L2B, L4B, L5B, L8B, L9B	C1-L	★	★	-	Blue	★	★	★	★	★	★
L2L, L4L	C1-L	★	★	-	Gold & Black	★	-	★	-	★	★
L1N, L2N, L4N	C1-L	★	★	-	Black & White	★	★	-	-	-	-
L1Q, L2Q, L8Q	C1-L	★	★	-	Turquoise	★	★	★	-	★	-
L1R, L2R, L4R, L5R, L8R, L9R	C1-L	★	★	-	Red	★	★	★	★	★	★
L1T, L2T, L4T, L5T, L8T	C1-L	★	★	-	Tan	★	★	★	★	-	★
L4X, L9X	C1-L	-	★	-	Black	-	-	-	★	★	★
M4B	C2-M	★	★	-	Blue	-	-	★	-	-	-
M4L	C2-M	-	★	-	Gold & Black	-	-	-	-	★	★
M3R, M4R	C2-M	-	-	★	Red	-	-	★	-	★	★
M4T	C2-M	-	★	-	Tan	-	-	-	-	★	★
M4W	C2-M	-	★	-	White	-	-	-	-	★	★
M3X, M4X	C2-M	-	★	★	Black	-	-	★	-	★	★
H1B, H4B	C3-H	★	★	-	Blue	★	-	★	★	★	-
H1L, H4L	C3-H	★	★	-	Gold & Black	★	-	★	-	★	-
H1N	C3-H	★	★	-	Black & White	★	-	★	★	★	-
H1Q	C3-H	★	★	-	Turquoise	★	-	★	-	★	-
H1R, H4R	C3-H	★	★	-	Red	★	-	★	★	★	-
H1T, H4T	C3-H	★	★	-	Tan	★	-	★	★	★	-
H4X	C3-H	-	★	-	Black	-	-	★	★	★	-
P4B	C2-P	-	★	-	Blue	-	-	-	-	★	★
P4L	C2-P	-	★	-	Gold & Black	-	-	-	-	★	★
P3R, P4R	C2-P	-	★	-	Red	-	-	-	-	★	★
P4T	C2-P	-	★	-	Tan	-	-	-	-	★	★
P4W	C2-P	-	★	-	White	-	-	-	-	★	★
P3X, P4X	C2-P	-	★	★	Black	-	-	-	-	★	★
M3B, M7B, M8B, M9B	Y1-M	★	-	★	Blue		-	★	-	★	★
M3C, M9C	Y1-M	-	-	★	Blue & White	-	-	★	-	★	★
M7G, M8G	Y1-M	★	-	★	Green & Gold	-	-	★	-	★	-
M3K, M9K	Y1-M	-	-	★	Purple	-	-	★	-	★	★
M7N, M8N	Y1-M	★	-	★	Black & White	-	-	★	-	★	-
M7P	Y1-M	★	-	★	Gray & Black	-	-	★	-	-	-
M7Q	Y1-M	★	-	★	Turquoise	-	-	★	-	★	★
M3R, M5R, M7R, M9R	Y1-M	★	-	★	Red	-	-	★	-	★	★
M3T, M7T, M9T	Y1-M	★	-	★	Tan	-	-	★	-	★	★
M3V, M9V	Y1-M	-	-	★	Red & White	-	-	★	-	★	★
M3W, M5W, M9W	Y1-M	-	-	★	White		-	★	-	★	★
M3X, M5X, M9X	Y1-H	-	-	★	Black	-	-	★	-	★	★
H6A, H7A	Y1-H	★	-	★	Gray	-	-	★	-	-	-
H3B, H7B	Y1-H	★	-	★	Blue	-	-	★	-	-	-
H3C	Y1-H	-	-	★	Blue & White	-	-	★	-	-	-
H7G	Y1-H	★	-	★	Green & Gold	-	-	★	-	-	-
H3R, H8R	Y1-H	-	-	★	Red	-	-	★	-	-	-
H7T	Y1-H	★	-	★	Tan	-	-	★	-	-	-
H3V	Y1-H	-	-	★	Red & White	-	-	★	-	-	-
H3W, H8W	Y1-H	-	-	★	White	-	-	★	-	-	-
H3X, H8X	Y1-H	-	-	★	Black	-	-	★	-	-	-

★ Indicates use as required.
⊟ Indicates parts not listed in any previous parts book.
May 1965, Supersedes Sept. 4, 1964.

Printed in U.S.A.
Prices and specifications subject to change without notice.
* Indicates change or addition.

MyMopar.com

NOTE RIGHT HAND AND LEFT HAND PARTS LISTED ON THE SAME LINE. Whenever right and left hand parts are identified by consecutive part numbers, they will be listed as in the following example: PANEL, Door Trim 3400-1 ABB. Interpreted this indicates that Panel, right is Part 3400 ABB and Panel, left is Part No. 3401 ABB.

CODE	REMARKS	PER CAR	SED.	4D H.T	STA. WGN.	2D H.T	CV. CP.
23-71-1	CARPET and FOUNDATION, Floor Console Side						
	C2 (4 speed manual trans. floor shift) (side cover) (formed carpet)						
	(codes M4B, P4B, L9B)	1	---- ---	4434 AB8	---- ---	4434 AB8	4434 AB8
	(codes M3R, M4R, P3R, P4R, L9R)	1	---- ---	4434 AR8	---- ---	4434 AR8	4434 AR8
	(codes M4T, P4T)	1	---- ---	4434 AT8	----	4434 AT8	4434 AT8
	(codes M1N, M4W, M3X, M4X, M4L, P4W, P3X, P4X, P4L, L9X)	1	---- ---	4434 AX8	---- ---	4434 AX8	4434 AX8
	(codes M4B, P4B, L9B)	1	---- ---	7383 AB8	---- ---	7383 AB8	7383 AB8
	(codes M3R, M4R, P3R, P4R, L9R)	1	---- ---	7383 AR8	---- ---	7383 AR8	7383 AR8
	(codes M4T, P4T)	1	---- ---	7383 AT8	---- ---	7383 AT8	7383 AT8
	(codes M1N, M4W, M3X, M4X, P3X, P4X, M4L, P4L, P4W, L9X)	1	---- ---	7383 AX8	---- ---	7383 AX8	7383 AX8
	(carpet w/foundation)						
	(codes M4B, P4B, L9B)	1	---- ---	7286-7 AB8	---- ---	7286-7 AB8	7286-7 AB8
	(codes M3R, M4R, P3R, P4R, L9R)	1	---- ---	7286-7 AR8	---- ---	7286-7 AR8	7286-7 AR8
	(codes M4T, P4T)	1	---- ---	7286-7 AT8	---- ---	7286-7 AT8	7286-7 AT8
	(codes M1N, M4W, P4W, M3X, M4X, P3X, P4X, L9X, M4L, P4L)	1	---- ---	7286-7 AX8	---- ---	7286-7 AX8	7286-7 AX8
	(side and rear) Left						
	(codes M4B, P4B, L9B)	1	---- ---	7301 AB8	---- ---	7301 AB8	7301 AB8
	(codes M3R, M4R, P3R, P4R, L9R)	1	---- ---	7301 AR8	---- ---	7301 AR8	7301 AR8
	(codes M4T, P4T)	1	---- ---	7301 AT8	---- ---	7301 AT8	7301 AT8
	(codes M1N, M4W, P4W, M3X, M4X, P3X, P4X, L9X, M4L, P4L)	1	---- ---	7301 AX8	---- ---	7301 AX8	7301 AX8
	C1, C2 (side cover) (plastic)						
	(manual w/floor shift trans.)	1	---- ---	2572 543	---- ---	2572 543	2572 543
	Fastener	5	---- ---	*6002 072	---- ---	*6002 072	*6002 072
23-71-3	LID, Floor Console Compartment						
	C1, C2, C3 (4 speed trans. floor shift)						
	(codes L9B, H4B)	1	---- ---	---- ---	---- ---	4460 AB4	4460 AB4
	(codes M4B, P4B)	1	---- ---	4460 AB8	---- ---	4460 AB8	4460 AB8
	(codes L9R, M3R, M4R, P3R, P4R, H4R)	1	---- ---	4460 AR7	---- ---	4460 AR7	4460 AR7
	(codes M4T, P4T)	1	---- ---	4460 AT6	---- ---	4460 AT6	4460 AT6
	(codes L9X, M3X, M4X, P3X, P4X, H4X)	1	---- ---	4460 AX9	---- ---	4460 AX9	4460 AX9
	(codes M1N, M4W, P4W)	1	---- ---	4460 AW3	---- ---	4460 AW3	4460 AW3
	(codes M4L, P4L, H4L)	1	---- ---	4460 AY3	---- ---	4460 AY3	4460 AY3
23-76-1	BUTTON, Front Door Arm Rest Lid						
	Y1	2	---- ---	2499 591	---- ---	2499 591	

★ Indicates use as required.
⊟ Indicates parts not listed in any previous parts book.
Right and left part numbers are on same line, first number is right, second number is left.
* Indicates change or addition.

MyMopar.com
Printed in U.S.A.
Prices and specifications subject to change without notice.
April 1966, Supersedes May 1965.

CODE	REMARKS	PER CAR	SED.	4D H.T	STA. WGN.	2D H.T	CV. CP.
23-76-2	CATCH, Front Door Arm Rest Lid						
	Y1-M	1	---- ---	2490 556-7	---- ---	2490 556-7	2490 556-7
23-76-5	PULL, Door Arm Rest						
	C3-H (6 window sedan)	2	2499 422-3	2499 422-3	2499 422-3	2499 422-3	
	Screw and Washer (pull to base)	8	---- ---	6024 061	6024 061	6024 061	
23-76-9	BASE, Door and Quarter Arm Rest						
	C1, C2 (quarter arm rest)	1	---- ---	---- ---	---- ---	1210-1 VZ1	
	(door arm rest)	2	1212-3 VZ1	1212-3 VZ1	1212-3 VZ1	1212-3 VZ1	1212-3 VZ1
	Screw (attaching)	★	162 090	162 090	162 090	162 090	162 090
	Nut (arm rest suppt. bracket)	4	1280 134	1280 134	1280 134	1280 134	1280 134
	Y1						
	Screw (front arm rest to trim panel)	8	---- ---	166 303	---- ---	166 303	166 303
23-76-10	PAD, Front Door Arm Rest Storage Compartment Lid						
	Y1						
	(codes M3B, M7B, M8B, M9B, H3B, H7B)	1	---- ---	1230-1 AB4	---- ---	1230-1 AB4	1230-1 AB4
	(code H7A)	1	---- ---	1230-1 AA3			
	(codes M3K, M9K)	1	---- ---	1230-1 AM9	---- ---	1230-1 AM9	1230-1 AM9
	(code M7Q)	1	---- ---	1230-1 AQ4			
	(codes M3R, M7R, M8R, M9R, H3R)	1	---- ---	1230-1 AR5	---- ---	1230-1 AR5	1230-1 AR5
	(codes M3T, M7T, M9T, H7T)	1	---- ---	1230-1 AL3	---- ---	1230-1 AL3	1230-1 AL3
	(codes M3C, M3V, M3W, M7N, M8N, M9C, M9V, H3C, H3V, H3W)	1	---- ---	1230-1 VW3	---- ---	1230-1 VW3	1230-1 VW3
	(codes M7G, M8G, H7G)	1	---- ---	1230-1 VF9	---- ---	1230-1 VF9	1230-1 VF9
	(codes M3X, M5X, M7P, M9X, H3X, H8X)	1	---- ---	1230-1 VX9	---- ---	1230-1 VX9	1230-1 VX9
23-76-11	PAD, Front Door Arm Rest						
	C1 C2						
	(codes L1B, L2B, L4B, L5B, L8B, M4B, P4B)	1	1222-3 AB8	1222-3 AB8	1222-3 AB8	1222-3 AB8	1222-3 AB8
	(codes L1Q, L2Q, L8Q)	1	1222-3 AQ8	1222-3 AQ8	---- ---	1222-3 AQ8	
	(codes M4L, P4L)	1	---- ---	---- ---	---- ---	1222-3 AY3	1222-3 AY3
	(codes L1R, L2R, L4R, L5R, L8R, M3R, M4R, P3R, P4R)	1	1222-3 AR8	1222-3 AR8	1222-3 AR8	1222-3 AR8	1222-3 AR8
	(codes L1T, L2T, L4T, L5T, L8T, M4T, P4T	1	1222-3 AT5	1222-3 AT5	1222-3 AT5	1222-3 AT5	1222-3 AT5
	(codes L1L, L2L, L1N, L2N, L4N, L4L, M1N, M3X, M4X, L4X, P3X, P4X, L9X)	1	1222-3 VX9	1222-3 VX9	1222-3 VX9	1222-3 VX9	1222-3 VX9
	(codes M4W, P4W)	1	---- ---	1222-3 VW3	---- ---	1222-3 VW3	1222-3 VW3
	Screw (attaching)	8	161 904	161 904	161 904	161 904	161 904
23-76-13	RETAINER, Door and Quarter Arm Rest Finish Plate						
	C3-H (6 window sedan)	4	2572 968	2572 968	2572 968	2572 968	
23-76-16	NUT, Door and Quarter Arm Rest and Door Pull Handle Attaching						
	C1, C2, C3, Y1	★	1280 134	1280 134	1280 134	1280 134	1280 134
23-76-17	HINGE, Front Seat Back Center Arm Rest						
	C3-H (6 window sedan)	1	2494 262-3	2494 262-3	2494 262-3		
	Y1	1	---- ---	2494 262-3			
	(door arm rest lid)	1	---- ---	2572 734-5	---- ---	2572 734-5	2572 734-5

★ Indicates use as required.
⊟ Indicates parts not listed in any previous parts book.

MyMopar.com

Printed in U.S.A.
Prices and specifications subject to change without notice.
Right and left part numbers are on same line, first number is right, second number is left.
* Indicates change or addition.

CODE	REMARKS	PER CAR	SED.	4D H.T	STA. WGN.	2D H.T	CV. CP.
23-76-18	ARM REST, Front Seat Back Center						
	C2, C3						
	(code H1B)	1	6949 A1B	6949 A1B			
	(code H1L)	1	6949 A1L	6949 A1L			
	(code H1N)	1	6949 A1N	6949 A1N	⊟6949 A1N		
	(code H1Q)	1	6949 A1Q	6949 A1Q			
	(code H1R)	1	6949 A1R	6949 A1R			
	(code H1T)	1	6949 A1T	6949 A1T			
	(code M4B)	1	---- ---	6945 AB8	---- ---	6945 AB8	6945 AB8
	(codes L9B, H4B)	1	---- ---	*6945 AB4	*6945 AB4	*6945 AB4	
	(codes M4T, H4T)	1	---- ---	6945 AT6	6945 AT6	6945 AT6	6945 AT6
	(codes M1N, M4W)	1	---- ---	6945 AW3	---- ---	6945 AW3	6945 AW3
	(codes L9X, M4X, H4X)	1	---- ---	*6945 AX9	*6945 AX9	*6945 AX9	*6945 AX9
	(codes M4L, H4L)	1	---- ---	6945 AY3	6945 AY3	6945 AY3	6945 AY3
	(codes L9R, M4R, H4R)	1	---- ---	*6945 AR7	*6945 AR7	*6945 AR7	*6945 AR7
	C2-M						
	(code M3R)	1	---- ---	---- ---	---- ---	6936 AR7	6936 AR7
	(code M3X)	1	---- ---	---- ---	---- ---	6936 AX9	6936 AX9
	Y1-H						
	(code H3B)	1	---- ---	7331 A3B			
	(codes H3C, H3V, H3W)	1	---- ---	7331 A3W			
	(code H3R)	1	---- ---	7331 A3R			
	(code H3X)	1	---- ---	7331 A3X			
	(code H6A)	1	---- ---	7722 A6A			
	(code H7A)	1	---- ---	6980 A7A			
	(code H7B)	1	---- ---	6980 A7B			
	(code H7G)	1	---- ---	6980 A7G			
	(code H7T)	1	---- ---	6980 A7T			
	Y1-M						
	(code M3B)	1	---- ---	6978 A3B			
	(code M3C)	1	---- ---	6978 A3C			
	(code M3K)	1	---- ---	6978 A3K			
	(code M3R)	1	---- ---	6978 A3R			
	(code M3T)	1	---- ---	6978 A3T			
	(code M3V)	1	---- ---	6978 A3V			
	(code M3W)	1	---- ---	6978 A3W			
	(code M3X)	1	---- ---	6978 A3X			
	(code M7B)	1	---- ---	6976 A7B			
	(code M7G)	1	---- ---	6976 A7G			
	(code M7N)	1	---- ---	6976 A7N			
	(code M7P)	1	---- ---	6976 A7P			
	(code M7Q)	1	---- ---	6976 A7Q			
	(code M7R)	1	---- ---	6976 A7R			
	(code M7T)	1	---- ---	6976 A7T			
	(codes M8B, M9B)	1	---- ---	---- ---	---- ---	6991 AB4	6991 AB4
	(codes M8N, M9C, M9V, M9W)	1	---- ---	---- ---	---- ---	6991 AW3	6991 AW3
	(code M9K)	1	---- ---	---- ---	---- ---	6991 AM9	6991 AM9
	(code M9R)	1	---- ---	---- ---	---- ---	6991 AR5	6991 AR5
	(code M9T)	1	---- ---	---- ---	---- ---	6991 AL3	6991 AL3
	(code M8G)	1	---- ---	---- ---	---- ---	6991 AF9	
	(code M9X)	1	---- ---	---- ---	---- ---	6991 AX9	6991 AX9
23-76-19	FLAP, Front Seat Back Center Arm Rest						
	C3-H						
	(code H1B)	1	6951 A1B	6951 A1B			
	(code H1L)	1	6951 A1L	6951 A1L			
	(code H1N)	1	6951 A1N	6951 A1N	6951 A1N		
	(code H1Q)	1	6951 A1Q	6951 A1Q			
	(code H1R)	1	6951 A1R	6951 A1R			
	(code H1T)	1	6951 A1T	6951 A1T			

★ Indicates use as required.
⊟ Indicates parts not listed in any previous parts book.
Right and left part numbers are on same line, first number is right, second number is left.
* Indicates change or addition.

MyMopar.com

CODE	REMARKS	PER CAR	SED.	4D H.T	STA. WGN.	2D H.T	CV. CP.
23-76-19	FLAP, Front Seat Back Center Arm Rest - Cont'd						
	Y1-M						
	(code M7B)	1	---- ---	7284 AOB			
	(code M7G)	1	---- ---	7284 ALF			
	(code M7N)	1	---- ---	7284 AWX			
	(code M7P)	1	---- ---	7284 AAX			
	(code M7Q)	1	---- ---	7284 AOQ			
	(code M7R)	1	---- ---	7284 AOR			
	(code M7T)	1	---- ---	7284 AOL			
	(code M3B)	1	---- ---	7285 AB4			
	(codes M3C, M3V, M3W)	1	---- ---	7285 AW3			
	(code M3K)	1	---- ---	7285 AM9			
	(code M3R)	1	---- ---	7285 AR5			
	(code M3T)	1	---- ---	7285 AL3			
	(code M3X)	1	---- ---	7285 AX9			
	Y1-H						
	(code H3B)	1	---- ---	7330 AB4			
	(code H3R)	1	---- ---	7330 AR5			
	(codes H3C, H3V, H3W)	1	---- ---	7330 AW3			
	(code H3X)	1	---- ---	7330 AX9			
	(code H7A)	1	---- ---	7329 AAA			
	(code H7B)	1	---- ---	7329 ABB			
	(code H7G)	1	---- ---	7329 ALF			
	(code H7T)	1	---- ---	7329 ALL			
23-76-21	SUPPORT, Front Seat Center Arm Rest						
	Y1						
	UP TO Serial No. 190974	1	---- ---	2446 737			
	AFTER Serial No. 190974	1	---- ---	2446 737			
23-76-27	RETAINER, Front Seat Center Arm Rest Frame Hook						
	C2, C3, Y1	1	---- ---	1918 568	1918 568	1918 568	1918 568
23-76-30	HANDLE, Seat Back Arm Rest Pull-Down						
	Y1-H	4	---- ---	2577 117			
23-76-34	COVER, Front Seat Back Center Arm Rest						
	C2, C3						
	(code M4B)	1	---- ---	6946 AB8	---- ---	6946 AB8	6946 AB8
	(codes M4T, H4T)	1	---- ---	6946 AT6	6946 AT6	6946 AT6	6946 AT6
	(codes M1N, M4W)	1	---- ---	6946 AW3	---- ---	6946 AW3	6946 AW3
	(codes L9X, M4X, H4X)	1	---- ---	*6946 AX9	*6946 AX9	*6946 AX9	*6946 AX9
	(codes M4L, H4L)	1	---- ---	6946 AY3	---- ---	6946 AY3	6946 AY3
	(codes L9B, H4B)	1	---- ---	*6946 AB4	*6946 AB4	*6946 AB4	*6946 AB4
	(codes L9R, M4R, H4R)	1	---- ---	*6946 AR7	*6946 AR7	*6946 AR7	*6946 AR7
	(code M3R)	1	---- ---	---- ---	---- ---	6937 AR8	6937 AR8
	(code M3X)	1	---- ---	---- ---	---- ---	6937 AX9	6937 AX9
	(code H1B)	1	6950 A1B	6950 A1B			
	(code H1L)	1	6950 A1L	6950 A1L			
	(code H1N)	1	6950 A1N	6950 A1N	6950 A1N		
	(code H1Q)	1	6950 A1Q	6950 A1Q			
	(code H1R)	1	6950 A1R	6950 A1R			
	(code H1T)	1	6950 A1T	6950 A1T			
	Y1-M						
	(code M3B)	1	---- ---	6977 A3B			
	(code M3C)	1	---- ---	6977 A3C			
	(code M3K)	1	---- ---	6977 A3K			
	(code M3R)	1	---- ---	6977 A3R			

★ Indicates use as required.
⊟ Indicates parts not listed in any previous parts book.
April 1966, Supersedes May 1965.

Printed in U.S.A.
Prices and specifications subject to change without notice.
Right and left part numbers are on same line, first number is right, second number is left.
* Indicates change or addition.

MyMopar.com

CODE	REMARKS	PER CAR	SED.	4D H.T	STA. WGN.	2D H.T	CV. CP.
23-76-34	COVER, Front Seat Back Center Arm Rest - Cont'd						
	Y1-M						
	(code M3T)	1	---- ---	6977 A3T			
	(codes M3V, M3W)	1	---- ---	6977 A3W			
	(code M3X)	1	---- ---	6977 A3X			
	(code M5W)	1	---- ---	6990 AW3			
	(code M5R)	1	---- ---	6990 AR5			
	(code M5X)	1	---- ---	6990 AX9			
	(code M7B)	1	---- ---	6975 A7B			
	(code M7G)	1	---- ---	6975 A7G			
	(code M7N)	1	---- ---	6975 A7N			
	(code M7P)	1	---- ---	6975 A7P			
	(code M7Q)	1	---- ---	6975 A7Q			
	(code M7R)	1	---- ---	6975 A7R			
	(code M7T)	1	---- ---	6975 A7T			
	Y1-H						
	(code H3B)	1	---- ---	7328 A3B			
	(codes H3C, H3V, H3W)	1	---- ---	7328 A3W			
	(code H3R)	1	---- ---	*7328 A3R			
	(code H3X)	1	---- ---	7328 A3X			
	(code H6A)	1	---- ---	7721 A6A			
	(code H7A)	1	---- ---	6979 A7A			
	(code H7B)	1	---- ---	6979 A7B			
	(code H7G)	1	---- ---	6979 A7G			
	(code H7T)	1	---- ---	6979 A7T			
	(code H8W)	1	---- ---	6990 AW3			
	(code H8R)	1	---- ---	6990 AR5			
	(code H8X)	1	---- ---	6990 AX9			
	Y1-M						
	(codes M8B, M9B)	1	---- ---	---- ---	---- ---	6990 AB4	6990 AB4
	(codes M8N, M9C, M9V, M9W)	1	---- ---	---- ---	---- ---	6990 AW3	6990 AW3
	(code M9K)	1	---- ---	---- ---	---- ---	6990 AM9	6990 AM9
	(code M9R)	1	---- ---	---- ---	---- ---	6990 AR5	6990 AR5
	(code M9T)	1	---- ---	---- ---	---- ---	6990 AL3	6990 AL3
	(code M9X)	1	---- ---	---- ---	---- ---	6990 AX9	6990 AX9
	(code M9G)	1	---- ---	---- ---	---- ---	6990 AF9	6990 AF9
23-76-36	COVER, Front Seat Center Arm Rest Stanchion						
	C2, C3, Y1-M	1	---- ---	4388-9 TX8	4388-9 TX8	4388-9 TX8	4388-9 TX8
23-76-40	ARM REST, Rear Seat Back Center						
	C3-H (6 window sedan)						
	(code H1B)	1	7236 A1B	6952 A1B	---- ---	6952 A1B	
	(code H1L)	1	7236 A1L	6952 A1L	---- ---	6952 A1L	
	(code H1N)	1	7236 A1N	6952 A1N	---- ---	6952 A1N	
	(code H1Q)	1	7236 A1Q	6952 A1Q	---- ---	6952 A1Q	
	(code H1R)	1	7236 A1R	6952 A1R	---- ---	6952 A1R	
	(code H1T)	1	7236 A1T	6952 A1T	---- ---	6952 A1T	
	Y1-M						
	(code M3B)	1	---- ---	6984 A3B			
	(code M3C)	1	---- ---	6984 A3C			
	(code M3K)	1	---- ---	6984 A3K			
	(code M3R)	1	---- ---	6984 A3R			
	(code M3T)	1	---- ---	6984 A3T			
	(code M3V)	1	---- ---	6984 A3V			
	(code M3W)	1	---- ---	6984 A3W			
	(code M3X)	1	---- ---	6984 A3X			
	(code M7B)	1	---- ---	6972 A7B			

★ Indicates use as required.
⊟ Indicates parts not listed in any previous parts book.
Right and left part numbers are on same line, first number is right, second number is left.
* Indicates change or addition.

MyMopar.com

Printed in U.S.A.
Prices and specifications subject to change without notice.
April 1966, Supersedes May 1965.

CODE	REMARKS	PER CAR	SED.	4D H.T	STA. WGN.	2D H.T	CV. CP.
23-76-40	ARM REST, Rear Seat Back Center - Cont'd						
	Y1-M						
	(code M7G)	1	---- ---	6972 A7G			
	(code M7N)	1	---- ---	6972 A7N			
	(code M7P)	1	---- ---	6972 A7P			
	(code M7Q)	1	---- ---	6972 A7Q			
	(code M7R)	1	---- ---	6972 A7R			
	(code M7T)	1	---- ---	6972 A7T			
	Y1						
	(codes M5R, H8R)	1	---- ---	7462 AR5			
	(codes M5W, H8W)	1	---- ---	7462 AW3			
	(codes M5X, H8X)	1	---- ---	7462 AX9			
	Y1-H						
	(code H3B)	1	---- ---	7317 A3B			
	(codes H3W, H3C, H3V)	1	---- ---	*7317 A3W			
	(code H3R)	1	---- ---	7317 A3R			
	(code H3X)	1	---- ---	7317 A3X			
	(code H6A)	1	---- ---	7729 A6A			
	(code H7A)	1	---- ---	6983 A7A			
	(code H7B)	1	---- ---	6983 A7B			
	(code H7G)	1	---- ---	6983 A7G			
	(code H7T)	1	---- ---	6983 A7T			
	Y1-M						
	(codes M8B, M9B)	1	---- ---	---- ---	---- ---	6987 AB4	
	(codes M8N, M9C, M9V, M9W)	1	---- ---	---- ---	---- ---	6987 AW3	
	(code M9K)	1	---- ---	---- ---	---- ---	6987 AM9	
	(code M9R)	1	---- ---	---- ---	---- ---	6987 AR5	
	(code M9T)	1	---- ---	---- ---	---- ---	6987 AL3	
	(code M9X)	1	---- ---	---- ---	---- ---	6987 AX9	
	(code M8G)	1	---- ---	---- ---	---- ---	6987 AF9	
	(code M9B)	1	---- ---	---- ---	---- ---	---- ---	6989 AB4
	(codes M9C, M9V, M9W)	1	---- ---	---- ---	---- ---	---- ---	6989 AW3
	(code M9K)	1	---- ---	---- ---	---- ---	---- ---	6989 AM9
	(code M9R)	1	---- ---	---- ---	---- ---	---- ---	6989 AR5
	(code M9T)	1	---- ---	---- ---	---- ---	---- ---	6989 AL3
	(code M9X)	1	---- ---	---- ---	---- ---	---- ---	6989 AX9
23-76-45	COVER, Rear Seat Back Center Arm Rest						
	C3-H (6 window sedan)						
	(code H1B)	1	7237 A1B	6953 A1B	---- ---	6953 A1B	
	(code H1L)	1	7237 A1L	6953 A1L	---- ---	6953 A1L	
	(code H1N)	1	7237 A1N	6953 A1N	---- ---	6953 A1N	
	(code H1Q)	1	7237 A1Q	6953 A1Q	---- ---	6953 A1Q	
	(code H1R)	1	7237 A1R	6953 A1R	---- ---	6953 A1R	
	(code H1T)	1	7237 A1T	6953 A1T	---- ---	6953 A1T	
	Y1-M						
	(code M3B)	1	---- ---	6982 A3B			
	(code M3C)	1	---- ---	6982 A3C			
	(code M3K)	1	---- ---	6982 A3K			
	(code M3R)	1	---- ---	6982 A3R			
	(code M3T)	1	---- ---	6982 A3T			
	(code M3V)	1	---- ---	6982 A3V			
	(code M3W)	1	---- ---	6982 A3W			
	(code M3X)	1	---- ---	6982 A3X			
	(code M5R)	1	---- ---	7463 AR5			
	(code M5W)	1	---- ---	7463 AW3			
	(code M5X)	1	---- ---	7463 AX9			
	(code M7B)	1	---- ---	6971 A7B			
	(code M7G)	1	---- ---	6971 A7G			

★ Indicates use as required.
⊟ Indicates parts not listed in any previous parts book.
May 1965, Supersedes Sept. 4, 1964.

Printed in U.S.A.
Prices and specifications subject to change without notice.
Right and left part numbers are on same line, first number is right, second number is left.
* Indicates change or addition.

MyMopar.com

CODE	REMARKS	PER CAR	SED.	4D H.T	STA. WGN.	2D H.T	CV. CP.
23-76-45	COVER, Rear Seat Back Center Arm Rest - Cont'd						
	Y1-M						
	(code M7N)	1	---- ---	6971 A7N			
	(code M7P)	1	---- ---	6971 A7P			
	(code M7Q)	1	---- ---	6971 A7Q			
	(code M7R)	1	---- ---	6971 A7R			
	(code M7T)	1	---- ---	6971 A7T			
	Y1-H						
	(code H3B)	1	---- ---	7316 A3B			
	(codes H3C, H3V, H3W)	1	---- ---	7316 A3W			
	(code H3R)	1	---- ---	7316 A3R			
	(code H3X)	1	---- ---	7316 A3X			
	(code H6A)	1	---- ---	7728 A6A			
	(code H7A)	1	---- ---	6981 A7A			
	(code H7B)	1	---- ---	6981 A7B			
	(code H7G)	1	---- ---	6981 A7G			
	(code H7T)	1	---- ---	6981 A7T			
	(code H8R)	1	---- ---	7463 AR5			
	(code H8W)	1	---- ---	7463 AW3			
	(code H8X)	1	---- ---	7463 AX9			
	Y1-M						
	(codes M8B, M9B)	1	---- ---	---- ---	---- ---	6986 AB4	6986 AB4
	(codes M8N, M9C, M9V, M9W)	1	---- ---	---- ---	---- ---	6986 AW3	6986 AW3
	(code M9K)	1	---- ---	---- ---	---- ---	6986 AM9	6986 AM9
	(code M9R)	1	---- ---	---- ---	---- ---	6986 AR5	6986 AR5
	(code M9T)	1	---- ---	---- ---	---- ---	6986 AL3	6986 AL3
	(code M9X)	1	---- ---	---- ---	---- ---	6986 AX9	6986 AX9
	(code M9G)	1	---- ---	---- ---	---- ---	6986 AF9	
23-76-53	FLAP, Rear Seat Back Center Arm Rest						
	C3-H (6 window sedan)						
	(code H1B)	1	7238 A1B	6954 A1B			
	(code H1L)	1	7238 A1L	6954 A1L			
	(code H1N)	1	7238 A1N	6954 A1N			
	(code H1Q)	1	7238 A1Q	6954 A1Q			
	(code H1R)	1	7238 A1R	6954 A1R			
	(code H1T)	1	7238 A1T	6954 A1T			
	Y1-M						
	(code M3B)	1	---- ---	6993 AB4			
	(codes M3C, M3V, M3W)	1	---- ---	6993 AW3			
	(code M3K)	1	---- ---	6993 AM9			
	(code M3R)	1	---- ---	6993 AR5			
	(code M3T)	1	---- ---	6993 AL3			
	(code M3X)	1	---- ---	6993 AX9			
	Y1-M, Y1-H						
	(codes M5R, H8R)	1	---- ---	⊟7315 AR5			
	(codes M5W, H8W)	1	---- ---	⊟7315 AW3			
	(codes M5X, H8X)	1	---- ---	⊟7315 AX9			
	Y1-M						
	(code M7G)	1	---- ---	⊟6970 AB4	---- ---	⊟6970 AB4	
	(code M7G)	1	---- ---	⊟6970 AL3	---- ---	⊟6970 AL3	
	(code M7N)	1	---- ---	⊟6970 AX8	---- ---	⊟6970 AX8	
	(code M7P)	1	---- ---	⊟6970 AA3	---- ---	⊟6970 AA3	
	(code M7Q)	1	---- ---	⊟6970 AQ4	---- ---	⊟6970 AQ4	
	(code M7R)	1	---- ---	⊟6970 AR5	---- ---	⊟6970 AR5	
	(code M7T)	1	---- ---	⊟6970 AL3	---- ---	⊟6970 AL3	
	Y1-H						
	(code H3B)	1	---- ---	7315 A3B			
	(codes H3C, H3V, H3W)	1	---- ---	7315 A3W			

★ Indicates use as required.
⊟ Indicates parts not listed in any previous parts book.
Right and left part numbers are on same line, first number is right, second number is left.
* Indicates change or addition.

Printed in U.S.A.
Prices and specifications subject to change without notice.
May 1965, Supersedes Sept. 4, 1964.

MyMopar.com

CODE	REMARKS	PER CAR	SED.	4D H.T	STA. WGN.	2D H.T.	CV. CP.
23-76-53	FLAP, Rear Seat Back Center Arm Rest - Cont'd						
	Y1-H						
	(code H3R)	1	---- ---	7315 A3R			
	(code H3X)	1	---- ---	7315 A3X			
	(code H6A)	1	---- ---	7727 AA4			
	(code H7A)	1	---- ---	⊟7314 AA3			
	(code H7B)	1	---- ---	⊟7314 AB4			
	(code H7G)	1	---- ---	⊟7314 AL2			
	(code H7T)	1	---- ---	⊟7314 AL3			
	(codes M8B, M9B)	1	---- ---	---- ---	---- ---	6998 AB4	6999 AB4
	(codes M8N, M9C, M9V, M9W)	1	---- ---	---- ---	---- ---	6998 AW3	6999 AW3
	(code M9K)	1	---- ---	---- ---	---- ---	6998 AM9	6999 AM9
	(code M9R)	1	---- ---	---- ---	---- ---	6998 AR5	6999 AR5
	(code M9T)	1	---- ---	---- ---	---- ---	6998 AL3	6999 AL3
	(code M9X)	1	---- ---	---- ---	---- ---	6998 AX9	6999 AX9
	(code M9G)	1	---- ---	---- ---	---- ---	6998 AF9	
23-76-63	PAD, Rear Door Arm Rest						
	C1, C2						
	(codes L1B, L2B, L4B, L5B, L8B, M4B)	1	1224-5 AB8	1224-5 AB8	1224-5 AB8		
	(codes L1Q, L2Q, L8Q)	1	1224-5 AQ8	1224-5 AQ8	1224-5 AQ8		
	(codes L1R, L2R, L4R, L5R, L8R, M4R)	1	1224-5 AR8	1224-5 AR8	1224-5 AR8		
	(code M4W)	1	---- ---	1224-5 AW3			
	(codes L1T, L2T, L4T, L5T L8T, M4T)	1	1224-5 AT8	1224-5 AT8	1224-5 AT8		
	(codes L4L, L4N, M3X, M4X, P3X, P4X, L9X)	1	*1224-5 VX9				
	Y1						
	(codes H6A, H7A)	1	---- ---	1234-5 AA3			
	(codes M3B, M7B, H3B, H7B)	1	---- ---	1234-5 AB4			
	(code M7Q)	1	---- ---	1234-5 AQ4			
	(codes M3R, M5R, M7R, H3R, H8R)	1	---- ---	1234-5 AR5			
	(codes M3T, M7T, H7T)	1	---- ---	1234-5 AL3			
	(code M3K)	1	---- ---	1234-5 AM9			
	(codes M3C, M3V, M3W, M5W, M7N, H3C, H3V, H3W, H8W)	1	---- ---	1234-5 VW3			
	(codes M76, H76)	1	---- ---	1234-5 VF9			
	(codes M3X, M5X, M7P, H3X, H8X)	1	---- ---	1234-5 VX9			
23-76-66	ARM REST, Rear Quarter						
	C3-H						
	(codes H1B, H4B)	2	---- ---	---- ---	---- ---	*1220 AB4	
	(codes H1L, H4L)	2	---- ---	---- ---	---- ---	*1220 AY3	
	(code H1N)	2	---- ---	---- ---	---- ---	*1220 AW3	
	(code H1Q)	2	---- ---	---- ---	---- ---	*1220 AQ4	
	(codes H1R, H4R)	2	---- ---	---- ---	---- ---	*1220 AR7	
	(code H1T)	2	---- ---	---- ---	---- ---	*1220 AT6	
	(code H4X)	2	---- ---	---- ---	---- ---	*1220 AX9	
	Y1-M						
	(codes M8B, M9B)	1	---- ---	---- ---	---- ---	4802-3 ABB	4810-1 ABB
	(code M8G)	1	---- ---	---- ---	---- ---	4802-3 AOF	
	(codes M8N, M9W)	1	---- ---	---- ---	---- ---	4802-3 AWX	4810-1 AWX
	(code M9C)	1	---- ---	---- ---	---- ---	4802-3 AWB	4810-1 AWB
	(code M9K)	1	---- ---	---- ---	---- ---	4802-3 AOM	4810-1 AOM
	(code M9R)	1	---- ---	---- ---	---- ---	4802-3 AOR	4810-1 AOR

★ Indicates use as required.
⊟ Indicates parts not listed in any previous parts book.
May 1965, Supersedes Sept. 4, 1964.

Printed in U.S.A.
Prices and specifications subject to change without notice.
Right and left part numbers are on same line, first number is right, second number is left.
• Indicates change or addition.

MyMopar.com

CODE	REMARKS	PER CAR	SED.	4D H.T	STA. WGN.	2D H.T	CV. CP.
23-76-66	ARM REST, Rear Quarter - Cont'd						
	Y1-M						
	(code M9T)	1	---- ---	---- ---	---- ---	4802-3 ALL	4810-1 ALL
	(code M9V)	1	---- ---	---- ---	---- ---	4802-3 AWR	4810-1 AWR
	(code M9X)	1	---- ---	---- ---	---- ---	4802-3 AXX	4810-1 AXX
23-76-76	PAD, Quarter Arm Rest						
	C1, C2						
	(codes L4B, L8B, M4B, P4B, L9B)	1	---- ---	---- ---	---- ---	1224-5 AB8	
	(code L8Q)	1	---- ---	---- ---	---- ---	1224-5 AQ8	
	(codes M4W, P4W)	1	---- ---	---- ---	---- ---	1224-5 AW3	
	(codes M4L, P4L)	1	---- ---	---- ---	---- ---	1224-5 AY3	
	(codes L4R, L8R, M3R. M4R, P3R, P4R, L9R)	1	---- ---	---- ---	---- ---	1224-5 AR8	
	(codes L8T, M4T, P4T)	1	---- ---	---- ---	---- ---	1224-5 AT8	
	(codes L4L, L4N, M3X, M4X, P3X, P4X, L9X)	1	---- ---	---- ---	---- ---	1224-5 VX9	
	Screw (attaching)	4	---- ---	---- ---	---- ---	161 904	
	Y1-M						
	(codes M8B, M9B)	1	---- ---	---- ---	---- ---	1240-1 AB4	1242-3 AB4
	(codes M8N, M9C, M9V, M9W)	1	---- ---	---- ---	---- ---	1240-1 VW3	1242-3 VW3
	(code M8G)	1	---- ---	---- ---	---- ---	1240-1 VF9	
	(code M9K)	1	---- ---	---- ---	---- ---	1240-1 AM9	1242-3 AM9
	(code M9R)	1	---- ---	---- ---	---- ---	1240-1 VR5	1242-3 VR5
	(code M9T)	1	---- ---	---- ---	---- ---	1240-1 AL3	1242-3 AL3
	(code M9X)	1	---- ---	---- ---	---- ---	1240-1 VX9	1242-3 VX9
23-76-79	BRACKET, Quarter Arm Rest Panel Attaching						
	Y1	2	---- ---	---- ---	---- ---	2572 399	2490 079
23-76-86	COVER, Rear Quarter Arm Rest						
	Y1-M						
	(codes M8B, M9B)	1	---- ---	---- ---	---- ---	4800-1 ABB	4808-9 ABB
	(code M8G)	1	---- ---	---- ---	---- ---	4800-1 AOF	
	(codes M8N, M9W)	1	---- ---	---- ---	---- ---	4800-1 AWX	4808-9 AWX
	(code M9C)	1	---- ---	---- ---	---- ---	4800-1 AWB	4808-9 AWB
	(code M9K)	1	---- ---	---- ---	---- ---	4800-1 AOM	4808-9 AOM
	(code M9R)	1	---- ---	---- ---	---- ---	4800-1 AOR	4808-9 AOR
	(code M9T)	1	---- ---	---- ---	---- ---	4800-1 ALL	4808-9 ALL
	(code M9V)	1	---- ---	---- ---	---- ---	4800-1 AWR	
	(code M9X)	1	---- ---	---- ---	---- ---	4800-1 AXX	4808-9 AXX
23-77-3	STRAP, Assist						
	Y1-H						
	(codes H3B, H7B)	2	---- ---	4100 AB4			
	(code H3C)	2	---- ---	4100 ABW			
	(codes H3R, H8R)	2	---- ---	*4109 ARR			
	(code H7T)	2	---- ---	4100 AL3			
	(code H3V)	2	---- ---	4100 ARW			
	(codes H3W, H8W)	2	---- ---	4100 AXW			
	(codes H3X, H8X)	2	---- ---	4100 AXX			
	(codes H6A, H7A)	2	---- ---	4100 AA3			
	(code H7G)	2	---- ---	4100 ALF			
23-77-9	BRACKET, Tailgate Assist Strap						
	C1, C3	1	---- ---	---- ---	*2656 703		
23-77-14	SUPPORT, Assist Strap						
	Y1-H	1	---- ---	2581 224-5			

★ Indicates use as required.
⊟ Indicates parts not listed in any previous parts book. Right and left part numbers are on same line, first number is right, second number is left.
● Indicates change or addition.

Printed in U.S.A.
Prices and specifications subject to change without notice.
April 1966, Supersedes May 1965.

MyMopar.com

CODE	REMARKS	PER CAR	SED.	4D H.T	STA. WGN.	2D H.T	CV. CP.
23-77-18	BRACKET, Rear Window Side Frame Assist Strap Support Attaching						
	Y1-H	2	---- ---	2588 027			
23-77-27	BAND, Assist Strap						
	Y1-H	2	---- ---	2581 230			
23-77-28	PLATE, Assist Strap Back						
	Y1-H	2	---- ---	2581 231			
23-78-2	BUTTON, Tufting						
	C1-L (seat back)						
	(code L1B)	2	4459 AB8				
	(code L1N)	2	4459 AW3				
	(code L1Q)	2	4459 AQ8				
	(code L1R)	2	4459 AR7				
	(code L1T)	2	4459 AT8				
	C1-L (6 window sedan) (rear back)						
	(code L2B)	3	4418 AB4				
	(code L2Q)	3	4418 AQ4				
	(code L2R)	3	4418 AR7				
	(code L2T)	3	4418 AT6				
	(code L2N)	3	4418 AW3				
	(code L2L)	3	4418 AY3				
	C1-L						
	(code L5B)	3	4418 AB4				
	(code L5R)	3	4418 AR7				
	(code L5T)	3	4418 AT6				
	C1-L (cushion and back) (round stud type) (metal)						
	(codes L1B, L1N, L1Q, L1R, L1T, L4B, L8B)	★	---- ---	4481 AB4	4481 AB4	4481 AB4	4481 AB4
	(code L8Q)	★	---- ---	4481 AQ4	---- ---	4481 AQ4	
	(codes L4R, L8R)	★	---- ---	4481 AR7	4481 AR7	4481 AR7	4481 AR7
	(codes L4T, L8T)	★	---- ---	4481 AT6	4481 AT6	4481 AT6	4481 AT6
	(code L4N)	★	---- ---	4481 AW3	---- ---	4481 AW3	
	(code L4X)	★	---- ---	4481 AX9	4481 AX9	4481 AX9	4481 AX9
	(code L4L)	★	---- ---	4481 AY3	---- ---	4481 AY3	4481 AY3
	C2-M, C2-P						
	(codes M3R, P3R)	★	---- ---	---- ---	---- ---	4480 AR7	4480 AR7
	(codes M3X, P3X)	★	---- ---	---- ---	---- ---	4480 AX9	4480 AX9
	C3-H (6 window sedan)						
	(code H1B)	★	4446 AB4	4446 AB4	---- ---	4446 AB4	
	(code H1L)	★	4446 AY3	4446 AY3	---- ---	4446 AY3	
	(code H1N)	★	4446 AW3	4446 AW3	4446 AW3	4446 AW3	
	(code H1Q)	●	4446 AQ4	4446 AQ4	---- ---	4446 AQ4	
	(code H1R)	★	4446 AR7	4446 AR7	---- ---	4446 AR7	
	(code H1T)	★	4446 AT6	4446 AT6	---- ---	4446 AT6	
	C3-H (door and quarter trim panel)						
	(code H4B)	★	---- ---	4446 AB4	4446 AB4	4446 AB4	
	(code H4L)	★	---- ---	4446 AY3	---- ---	4446 AY3	
	(code H4R)	★	---- ---	4446 AR7	4446 AR7	4446 AR7	
	(code H4T)	★	---- ---	---- ---	4446 AT6		
	(cushion and back)						
	(code H4B)	★	---- ---	4482 AB4	4482 AB4	4482 AB4	
	(code H4L)	★	---- ---	4482 AY3	4482 AY3	4482 AY3	
	(code H4R)	★	---- ---	4482 AR7	4482 AR7	4482 AR7	
	(code H4T)	★	---- ---	4482 AT6	4482 AT6	4482 AT6	
	(code H4X)	★	---- ---	4482 AX9	4482 AX9	4482 AX9	
	(2nd and 3rd seat)						
	(code H1N)	★	---- ---	---- ---	4446 AW3		

● Indicates use as required.
⊟ Indicates parts not listed in any previous parts book.
April 1966, Supersedes May 1965.

Printed in U.S.A.
Prices and specifications subject to change without notice.
Right and left part numbers are on same line, first number is right, second number is left.
* Indicates change or addition.

MyMopar.com

CODE	REMARKS	PER CAR	SED.	4D H.T	STA. WGN.	2D H.T	CV. CP.
23-78-2	BUTTON, Tufting - Cont'd						
	Y1-M (backs and center arm rest)						
	(codes M3R, M7B)	★	---- ---	4476 AB4			
	(codes M3C, M3V, M3W)	★	---- ---	4476 AW3			
	(code M3K)	★	---- ---	4476 AM9			
	(codes M3R, M7R)	★	---- ---	4476 AR5			
	(codes M3T, M7T, M7G)	★	---- ---	4476 AL3			
	(codes M3X, M7N)	★	---- ---	4476 AX9			
	(code M7P)	★	---- ---	4476 AA3			
	(code M7Q)	★	---- ---	⊟4476 AQ4			
	(code M8B)	★	---- ---	---- ---	---- ---	4479 AB4	
	(code M8G)	★	---- ---	---- ---	---- ---	4479 AL2	
	(code M8N)	★	---- ---	---- ---	---- ---	4479 AX8	
	(code M9B)	★	---- ---	---- ---	---- ---	4480 AB4	4480 AB4
	(codes M5W, H8W, M9C, M9V, M9W)	★	---- ---	---- ---	---- ---	4480 AW3	4480 AW3
	(code M9K)	★	---- ---	---- ---	---- ---	4480 AM9	4480 AM9
	(codes M5R, M9R, H8R)	★	---- ---	---- ---	---- ---	4480 AR5	4480 AR5
	(code M9T)	★	---- ---	---- ---	---- ---	4480 AL3	4480 AL3
	(codes M5X, M9X, H8Y)	★	---- ---	4480 AX9	---- ---	4480 AX9	4480 AX9
	(cushions)						
	(codes M3B, M7B)	★	---- ---	4478 AB4			
	(codes M3C, M3V, M3W)	★	---- ---	4478 AW3			
	(code M3K)	★	---- ---	4478 AM9			
	(codes M3R, M7R)	★	---- ---	4478 AR5			
	(codes M3T, M7T, M7G)	★	---- ---	*4478 AL3			
	(codes M3X, M7N)	★	---- ---	4478 AX9			
	(code M7P)	★	---- ---	4478 AA3			
	(code M7Q)	★	---- ---	⊟4478 AQ4			
	Y1-M (back of front seat back)						
	(codes M3B, M7B)	8	---- ---	4323 AB4			
	(code M7G)	8	---- ---	4323 AF9			
	(codes M3C, M3V, M3W)	8	---- ---	4323 AW3			
	(code M3K)	8	---- ---	4323 AM9			
	(codes M3X, M7P)	8	---- ---	4323 AX9			
	(code M7Q)	8	---- ---	4323 AQ4			
	(codes M3R, M7R)	8	---- ---	4323 AR5			
	(codes M3T, M7T)	8	---- ---	4323 AL3			
23-78-3	RETAINER, Seat Cushion, Back and Center Arm Rest Button						
	C1, C2, C3, Y1 (6 window sedan) (for round stud type button) (metal)	★	2577 194	2577 194	2577 194	2577 194	⊟2577 194
	C1-L (oblong 2 prong type button) (fibre) (codes L1B, L1N, L1Q, L1R, L1T)	2	2577 252				
23-79-3	CARPET, Front Floor						
	C1, C2, C3						
	(codes L1B, L2B, L4B, L5B, L8B, L9B, M4B, H1B, H4B)	1	1731 AB8	1731 AB8	1731 AB8	1731 AB8	1731 AB8
	(codes L1Q, L2Q, L8Q, H1Q)	1	1731 AQ8	1731 AQ8	1731 AQ8	1731 AQ8	1731 AQ8
	(codes L1R, L2R, L4R, L5R, L8R, L9R, M3R, M4R, H1R, H4R)	1	1731 AR8	1731 AR8	1731 AR8	1731 AR8	1731 AR8
	(codes L1T, L2T, L4T, L5T, L8T, M4T, H1T, H4T)	1	1731 AT8	1731 AT8	1731 AT8	1731 AT8	1731 AT8

★ Indicates use as required.
⊟ Indicates parts not listed in any previous parts book.
Right and left part numbers are on same line, first number is right, second number is left.
* Indicates change or addition.

MyMopar.com

Printed in U.S.A.
Prices and specifications subject to change without notice.
May 1965, Supersedes Sept. 4, 1964.

CODE	REMARKS	PER CAR	SED.	4D H.T	STA. WGN.	2D H.T	CV. CP.
23-79-3	CARPET, Front Floor - Cont'd						
	C1, C2, C3						
	(codes L1N, L2N, L4N, M1N, H1N, L2L, L4L, M4L, H1L, H4L, L4X, L9X, M3X, M4X, H4X, H4W)	1	1731 AX8	1731 AX8	1731 AX8	1731 AX8	1731 AX8
	C2, C3 (automatic trans. w/floor console)						
	(codes L9B, M4B, P4B, H4B)	1	---- ---	1762 AB8	---- ---	1762 AB8	1762 AB8
	(codes L9R, M3R, M4R, P3R, P4R, H4R)	1	---- ---	1762 AR8	---- ---	1762 AR8	1762 AR8
	(codes M4T, P4T)	1	---- ---	1762 AT8	---- ---	1762 AT8	1762 AT8
	(codes L9X, M1N, M3X, M4X, P3X, P4X, H4X, M4W, P4W, M4L, P4L, H4L)	1	---- ---	1762 AX8	---- ---	1762 AX8	1762 AX8
	(4 speed manual trans. w/floor console)						
	(codes L9B, M4B, P4B)	1	---- ---	1738 AB8	---- ---	1738 AB8	1738 AB8
	(codes L9R, M3R, M4R, P3R, P4R)	1	---- ---	1738 AR8	---- ---	1738 AR8	1738 AR8
	(codes M4T, P4T)	1	---- ---	1738 AT8	---- ---	1738 AT8	1738 AT8
	(codes L9X, M1N, M3X, M4X, P3X, P4X, M4W, P4W, M4L, P4L, H4L)	1	---- ---	1738 AX8	---- ---	1738 AX8	1738 AX8
	C2-M (4 speed trans. floor shift)						
	(code M4B)	1	---- ---	1732 AB8	---- ---	1732 AB8	1732 AB8
	(codes M3R, M4R)	1	---- ---	1732 AR8	---- ---	1732 AR8	1732 AR8
	(code M4T)	1	---- ---	1732 AT8	---- ---	1732 AT8	1732 AT8
	(codes M1N, M3X, M4X, M4W, M4L)	1	---- ---	1732 AX8	---- ---	1732 AX8	1732 AX8
	Y1 (automatic trans.)						
	(codes M3B, M7B, M8B, M9B, H3B, H7B, M3C, M9C, H3C)	1	---- ---	1754 VB6	---- ---	1754 VB6	1754 VB6
	(codes M3T, M7T, M9T, H7T)	1	---- ---	1754 AL6			
	(codes M7G, M8G, H7G)	1	---- ---	1754 VF9	---- ---	1754 VF9	
	(codes M3K, M9K)	1	---- ---	1754 AM9			
	(code M7Q)	1	---- ---	1754 VQ6			
	(codes M3R, M5R, M9R, H3R, M7R, H8R, M3V, M9V, H3V)	1	---- ---	1754 AR5			
	(codes M3W, M9W, H3W, M3X, M9X, H3X, M7N, M7P, M8N, H7A)	1	---- ---	1754 VX8	---- ---	1754 VX8	1754 VX8
23-79-5	WASHER, Spare Tire Cover Carpet						
	C3	10	---- ---	---- ---	*2572 486		
23-79-33	CARPET, Rear Floor						
	C1, C3						
	(codes L1B, L2B, L4B, L5B, L8B, H1B)	1	1724 AB8	1724 AB8	1721 AB8	1722 AB8	1722 AB8
	(codes L1Q, L2Q, L8Q, H1Q)	1	1724 AQ8	1724 AQ8	---- ---	1722 AQ8	1722 AQ8
	(codes L1R, L2R, L4R, L8R, H1R)	1	1724 AR8	1724 AR8	1721 AR8	1722 AR8	1722 AR8
	(codes L1T, L2T, L5T, L8T, H1T)	1	1724 AT8	1724 AT8	1721 AT8	1722 AT8	1722 AT8
	(codes L1N, L2N, L4N, H1N, L2L, L4L, H1L)	1	1724 AX8	1724 AX8	1721 AX8	1722 AX8	1722 AX8
	C2, C3 (w/o floor console)						
	(codes L9B, M4B, H4B)	1	---- ---	1728 AB8	*1763 AB8	1725 AB8	1725 AB8
	(codes L9R, M3R, M4R, H4R)	1	---- ---	1726 AR8	*1763 AR8	1725 AR8	1725 AR8

★ Indicates use as required.
⊟ Indicates parts not listed in any previous parts book.
May 1965, Supersedes Sept. 4, 1964.

Printed in U.S.A.
Prices and specifications subject to change without notice.
Right and left part numbers are on same line, first number is right, second number is left.
* Indicates change or addition.

MyMopar.com

CODE	REMARKS	PER CAR	SED.	4D H.T	STA. WGN.	2D H.T	CV. CP.
23-79-33	CARPET, Rear Floor - Cont'd						
	C2, C3 (w/o floor console)						
	(codes M1N, M3X, M4W, L9X, M4X, M4L, H4L, H4X)	1	---- ---	1726 AX8	*1763 AX8	1725 AX8	1725 AX8
	(code M4T)	1	---- ---	1726 AT8	*1763 AT8	1725 AT8	1725 AT8
	(w/floor console)						
	(codes L9B, M4B, P4B, H4B)	1	---- ---	1739 AB8	---- ---	1733 AB8	1733 AB8
	(codes L9R, M3R, M4R, P3R, P4R, H4R)	1	---- ---	1739 AR8	---- ---	1733 AR8	1733 AR8
	(codes M4T, P4T)	1	---- ---	1739 AT8	---- ---	1733 AT8	1733 AT8
	(codes M1N, M3X, P3X, P4X, L9X, M4X, H4X, M4W, M4L, P4L, H4L)	1	---- ---	1739 AX8	---- ---	1733 AX8	1733 AX8
	C1, C3 (axle kick-up rear floor pan front trim panel)						
	(codes L4B, H4B, L4R, H4R, L4T, H4T, L4X, H1N, H4X)	1	---- ---	---- ---	4319 AT8		
	(axle kick-up center floor pan rear trim panel)						
	(codes L4B, H4B, L4R, H4R, L4T, H4T, L4X, H4X, H1N).	1	---- ---	---- ---	4320 AT8		
	(rear floor well front cover)						
	(codes L4B, H4B)	1	---- ---	---- ---	2014 AB4		
	(codes L4R, H4R)	1	---- ---	---- ---	2014 AR7		
	(codes L4T, H4T)	1	---- ---	---- ---	2014 AT6		
	(code H1N)	1	---- ---	---- ---	2014 AW3		
	(codes L4X, H4X)	1	---- ---	---- ---	2014 AX9		
	(rear floor well side cover)						
	(codes L4B, H4B)	1	---- ---	---- ---	2088-9 AB4		
	(codes L4R, H4R)	1	---- ---	---- ---	2088-9 AR7		
	(codes L4T, H4T)	1	---- ---	---- ---	2088-9 AT6		
	(codes L4X, H4X)	1	---- ---	---- ---	2088-9 AW3		
	(code H1N)	1	---- ---	---- ---	2088-9 AX9		
	C1-L (2 seat station wagon) (rear floor pan cover panel insert) (vinoleum)						
	(code L4B)	1	---- ---	---- ---	1819 AB8		
	(code L4R)	1	---- ---	---- ---	1819 AR7		
	(code L4T)	1	---- ---	---- ---	1819 AT8		
	(code L4X)	1	---- ---	---- ---	1819 AX9		
	C1-L (2 and 3 seat station wagon) (center and rear floor pan) (vinoleum)						
	(code L4B)	1	---- ---	---- ---	1810 AB8		
	(code L4R)	1	---- ---	---- ---	1810 AR7		
	(code L4T)	1	---- ---	---- ---	1810 AT8		
	(code L4X)	1	---- ---	---- ---	1810 AX9		
	C3-H (carpet and moulding) (ctr. and rear floor pan)						
	(code H4B)	1	---- ---	---- ---	*1813 AB8		
	(code H4R)	1	---- ---	---- ---	1813 AR8		
	(code H4T)	1	---- ---	---- ---	1813 AT8		
	(codes H4X, H1N)	1	---- ---	---- ---	1813 AX8		
	C3-H (rear floor pan cover panel carpet and moulding insert)						
	(code H4B)	1	---- ---	---- ---	*1829 AB8		
	(code H4R)	1	---- ---	---- ---	*1829 AR8		
	(code H4T)	1	---- ---	---- ---	*1829 AT8		
	(codes H4X, H1N)	1	---- ---	---- ---	*1829 AX8		

★ Indicates use as required.
⊟ Indicates parts not listed in any previous parts book.
Right and left part numbers are on same line, first number is right, second number is left.
* Indicates change or addition.

MyMopar.com

Printed in U.S.A.
Prices and specifications subject to change without notice.
May 1965, Supersedes Sept. 4, 1964.

CODE	REMARKS	PER CAR	SED.	4D H.T	STA. WGN.	2D H.T	CV. CP.
23-79-33	CARPET, Rear Floor - Cont'd						
	Y1						
	(codes M3B, M3C, M7C, H3B, H3C, H7B)	1	---- ---	1753 VB6			
	(codes M3G, H7G)	1	---- ---	1753 VF9			
	(codes M3W, M3X, M7N, M7P, H3W, H3X, H7A)	1	---- ---	1753 VX8			
	(code M7Q)	1	---- ---	1753 VQ6			
	(codes M3R, M3V, M7R, H3R, H3V)	1	---- ---	1753 AR5			
	(codes M3T, M7T, H7T)	1	---- ---	1753 AL6			
	(code M3K)	1	---- ---	1753 AM9			
	(codes M5R, H8R)	1	---- ---	1765 AR5			
	(codes M5W, M5X, H8W, H8X)	1	---- ---	1765 AX8			
	(codes M8B, M9B, M9C)	1	---- ---	---- ---	---- ---	1751 AB6	1752 AB6
	(codes M9R, M9V)	1	---- ---	---- ---	---- ---	1751 AR5	1752 AR5
	(code M8G)	1	---- ---	---- ---	---- ---	1751 AF9	
	(code M9T)	1	---- ---	---- ---	---- ---	1751 AL6	1752 AL6
	(code M9K)	1	---- ---	---- ---	---- ---	1751 AM9	1752 AM9
	(codes M8N, M9W, M9X)	1	---- ---	---- ---	---- ---	1751 AX8	1752 AX8
	Y1-M						
	(codes M9B, M9C)	1	---- ---	---- ---	---- ---	---- ---	1752 AB6
	(code M9K)	1	---- ---	---- ---	---- ---	---- ---	1752 AM9
	(codes M9R, M9V)	1	---- ---	---- ---	---- ---	---- ---	1752 AR5
	(code M9T)	1	---- ---	---- ---	---- ---	---- ---	1752 AL6
	(codes M9W, M9X)	1	---- ---	---- ---	---- ---	---- ---	1752 AX8
23-79-62	INSERT, Support Panel Carpet and Moulding						
	C1-L						
	(code L4B)	1	---- ---	---- ---	1825 AB8		
	(code L4R)	1	---- ---	---- ---	1825 AR7		
	(code L4T)	1	---- ---	---- ---	1825 AT8		
	(code L4X)	1	---- ---	---- ---	1825 AX9		
	C3-H (2nd seat)						
	(codes H1N, H4X)	1	---- ---	---- ---	1807 AX8		
	(code H4B)	1	---- ---	---- ---	1807 AB8		
	(code H4R)	1	---- ---	---- ---	1807 AR8		
	(code H4T)	1	---- ---	---- ---	1807 AT8		
23-79-64	CARPET, Luggage Compartment Floor						
	C2-P, C3-H (6 window sedan)						
	(codes H1B, H4B, P4B, H1L, H4L, P4L, H1N, P4N, H1Q, H1R, P3R, P4R, H1T, H4T, P4T, H4X, P3X, P4X)	1	4995 AX9	4995 AX9	---- ---	4995 AX9	4996 AX9
	Y1	1	---- ---	*7668 BX9	---- ---	*7668 BX9	*7668 BX9
	(spare tire cover)						
	C1-L						
	UP TO approx. Serial No. 207652						
	(code L4B)	1	---- ---	---- ---	*3584 AB4		
	(code L4R)	1	---- ---	---- ---	*3584 AR7		
	(code L4T)	1	---- ---	---- ---	*4181 AT6		
	(code L4X)	1	---- ---	---- ---	4498 AX9		
	AFTER approx. Serial No. 207652						
	(code L4B)	1	---- ---	---- ---	*3584 AB4		
	(code L4R)	1	---- ---	---- ---	*3584 AR7		
	(code L4T)	1	---- ---	---- ---	4181 AT6		
	(code L4X)	1	---- ---	---- ---	4181 AX9		

★ Indicates use as required.
⊟ Indicates parts not listed in any previous parts book.
April 1966, Supersedes May 1965.

Printed in U.S.A.
Prices and specifications subject to change without notice.
Right and left part numbers are on same line, first number is right, second number is left.
* Indicates change or addition.

MyMopar.com

CODE	REMARKS	PER CAR	SED.	4D H.T	STA. WGN.	2D H.T	CV. CP.
23-79-64	CARPET, Luggage Compartment Floor - Cont'd						
	C3-H						
	(UP TO approx. Serial No. 207652)						
	(code H4B)	1	---- ---	---- ---	*4499 ABB		
	(code H4R)	1	---- ---	---- ---	4499 ARR		
	(code H4T)	1	---- ---	---- ---	4499 ATT		
	(code H4X)	1	---- ---	---- ---	4499 AOX		
	(code H1N)	1	---- ---	---- ---	4499 AWX		
	AFTER approx. Serial No. 207652)						
	(code H4B)	1	---- ---	---- ---	⊟4182 ABB		
	(code H4R)	1	---- ---	---- ---	⊟4182 ARR		
	(code H4T)	1	---- ---	---- ---	⊟4182 ATT		
	(code H4X)	1	---- ---	---- ---	⊟4182 AOX		
	(code H1N)	1	---- ---	---- ---	⊟4182 AWX		
	Y1-H (rear floor well)	1	---- ---	4919 AX9			
	C3-H						
	(code H4B)	1	---- ---	---- ---	1630 AB8		
	(code H4R)	1	---- ---	---- ---	1630 AR8		
	(code H4T)	1	---- ---	---- ---	1630 AT8		
	(codes H1N, H4X)	1	---- ---	---- ---	1630 AX8		
23-79-67	HANDLE, Spare Tire Cover C1, C3	1	---- ---	---- ---	⊟4183 AX9		
23-79-68	GROMMET, Spare Tire Cover Latching C1, C3	2	---- ---	---- ---	⊟2656 731		
23-79-79	INSERT, Tailgate Inside Panel C1-L (vinoleum)						
	(code L4B)	1	---- ---	---- ---	1820 AB8		
	(code L4R)	1	---- ---	---- ---	1820 AR7		
	(code L4T)	1	---- ---	---- ---	1820 AT8		
	(code L4X)	1	---- ---	---- ---	1820 AX9		
	(access hole cover panel)						
	(code L4B)	1	---- ---	---- ---	1823 AB8		
	(code L4R)	1	---- ---	---- ---	1823 AR7		
	(code L4T)	1	---- ---	---- ---	1823 AT8		
	(code L4X)	1	---- ---	---- ---	1823 AX9		
	(tailgate sill to tailgate cover panel)						
	(code L4B)	1	---- ---	---- ---	1824 AB8		
	(code L4R)	1	---- ---	---- ---	1824 AR7		
	(code L4T	1	---- ---	---- ---	1824 AT8		
	(code L4X)	1	---- ---	---- ---	1824 AX9		
	C3-H						
	(code H4B)	1	---- ---	---- ---	⊟1809 AB8		
	(code H4R)	1	---- ---	---- ---	⊟1809 AR8		
	(code H4T)	1	---- ---	---- ---	⊟1809 AT8		
	(codes H1N, H4X)	1	---- ---	---- ---	⊟1809 AX8		
	C3-H (tailgate sill to tailgate cover panel) (carpet and moulding)						
	(code H4B)	1	---- ---	---- ---	1828 AB8		
	(code H4R)	1	---- ---	---- ---	1828 AR8		
	(code H4T)	1	---- ---	---- ---	1828 AT8		
	(codes H4X, H1N)	1	---- ---	---- ---	1828 AX8		
	(tailgate access hole cover panel carpet and moulding)						

★ Indicates use as required.
⊟ Indicates parts not listed in any previous parts book.
Right and left part numbers are on same line, first number is right, second number is left.
* Indicates change or addition.

MyMopar.com

Printed in U.S.A.
Prices and specifications subject to change without notice.
May 1965, Supersedes Sept. 4, 1964.

CODE	REMARKS	PER CAR	SED.	4D H.T	STA. WGN.	2D H.T	CV. CP.
23-79-79	INSERT, Tailgate Inside Panel - Cont'd						
	C3-H						
	(code H4B)	1	---- ---	---- ---	⊟1827 AB8		
	(code H4R)	1	---- ---	---- ---	⊟1827 AR8		
	(code H4T)	1	---- ---	---- ---	⊟1827 AT8		
	(codes H1N, H4X)	1	---- ---	---- ---	⊟1827 AX8		
	(tailgate opening pillar) (upper)	1	---- ---	---- ---	2810-1 AT6		
	(lower) Right	1	---- ---	---- ---	2812 AT6		
	Screw (insert attaching)	4	---- ---	---- ---	6025 540		
23-82-3	STRAP, Front Seat Back Robe						
	Y1						
	(codes M8B, M9B)	2	---- ---	---- ---	---- ---	*4339 VB8	*4339 VB8
	(codes M5W, M9W, H8W, M8N, M9C, M9V)	2	---- ---	4339 AW3	---- ---	4339 AW3	4339 AW3
	(code M8G)	2	---- ---	---- ---	---- ---	4339 AF9	
	(code M9K)	2	---- ---	---- ---	---- ---	4339 AM9	4339 AM9
	(codes M5R, M9R, H8R)	2	---- ---	4339 AR5	---- ---	4339 AR5	4339 AR5
	(code M9T)	2	---- ---	---- ---	---- ---	4339 AL3	4339 AL3
	(codes M5X, M9X, H8X)	2	---- ---	4339 AX9	---- ---	4339 AX9	4339 AX9
23-82-14	HANDLE, Front Seat Back Grab						
	C3-H (6 window sedan)	2	2522 566	2522 566	2522 566	2522 566	
	Screw (upper)	2	* 456 781	* 456 781	* 456 781	* 456 781	
	Y1	2	---- ---	2522 566			
	Screw (upper)	2	---- ---	* 456 781			
23-82-22	BEZEL, Front Seat Back Grab Handle						
	Y1	1	---- ---	2522 568-9			
23-82-30	HOOK, Coat Hanger						
	C1, C2, C3	2	2581 908	2581 908	---- ---	2581 908	
	Y1	2	---- ---	2490 011	---- ---	2490 011	
	Screw (attaching)	2	---- ---	148 095	---- ---	148 095	
23-82-39	BRACKET, Coat Hook Support						
	C1, C2, C3	2	---- ---	2527 098	2573 143	2527 098	
23-84-3	PAD, Instrument Panel Trim						
	C1, C2, C3						
	(codes L1B, L2B, L4B, L5B, L8B, L9B, M4B, H1B, H4B, P4B)	1	4237 AB8	4237 AB8	4237 AB8	4237 AB8	4237 AB8
	(codes L1Q, L2Q, L8Q, H1Q)	1	4237 AQ8	4237 AQ8	---- ---	4237 AQ8	
	(codes L1R, L2R, L4R, L5R, L8R, M3R, M4R, H1R, H4R, P3R, P4R)	1	4237 AR8	4237 AR8	4237 AR8	4237 AR8	4237 AR8
	(codes L1T, L2T, L4T, L5T, L8T, M4T, H1T, H4T, P4T)	1	4237 AT8	4237 AT8	4237 AT8	4237 AT8	4237 AT8
	(codes L1N, L2N, L4N, M1N, H1N, L2L, L4L, M4L, H1L, H4L, P4L, L4X, L9X, M3X, M4X, P3X, P4X, H4X, M4W, P4W)	1	4237 AX8	4237 AX8	4237 AX8	4237 AX8	4237 AX8
	Nut and Washer (attaching)	6	6025 002	6025 002	6025 002	6025 002	6025 002
	Fastener (to inst. panel)	6	6024 274	6024 274	6024 274	6024 274	6024 274
	Y1 (upper)						
	(codes M3B, M7B, M8B, M9B, H3B, H7B, M3C, M9C, H3C)	1	---- ---	4218 AB8	---- ---	4218 AB8	4218 AB8
	(codes M7G, M8G, H7G)	1	---- ---	4218 AF9	---- ---	4218 AF9	
	(codes M3K, M9K)	1	---- ---	4218 AM9	---- ---	4218 AM9	4218 AM9

★ Indicates use as required.
⊟ Indicates parts not listed in any previous parts book.
May 1965, Supersedes Sept. 4, 1964.

MyMopar.com

Printed in U.S.A.
Prices and specifications subject to change without notice.
Right and left part numbers are on same line, first number is right, second number is left.
• Indicates change or addition.

CODE	REMARKS	PER CAR	SED.	4D H.T	STA. WGN.	2D H.T	CV. CP.
23-84-3	PAD, Instrument Panel Trim - Cont'd						
	Y1 (upper)						
	(codes M3W, M5W, M9W, H3W, H8W, M3X, M5X, M9X, H3X, H8X, M7N, M8N, M7P, H6A, H7A)	1	---- ---	4218 AX8	---- ---	4218 AX8	4218 AX8
	(code M7Q)	1	---- ---	4218 AQ8			
	(codes M3R, M5R, M7R, M9R, H3V, H3R, H8R)	1	---- ---	4218 AR7	---- ---	4218 AR7	4218 AR7
	(codes M3T, M7T, M9T, H7T)	1	---- ---	4218 AY8	---- ---	4218 AY8	4218 AY8
	(lower)						
	(codes M3B, M7B, M8B, M9B, M3C, M9C, H3C, H3B, H7B)	1	---- ---	4212 AB8	---- ---	4212 AB8	4212 AB8
	(codes M3K, M9K)	1	---- ---	4212 AM9	---- ---	4212 AM9	4212 AM9
	(codes M3T, M7T, M9T, H7T)	1	---- ---	4212 AY8	---- ---	4212 AY8	4212 AY8
	(code M7Q)	1	---- ---	4212 AQ8			
	(codes M3W, M5W, M9W, H3W H8W, M3X, M5X, M9X, H3X, H8X, M7N, M7P, H6A, H7A)	1	---- ---	4212 VX8	---- ---	4212 VX8	4212 VX8
	(codes M7G, M8C, H7G)	1	---- ---	4212 VF9	---- ---	4212 VF9	
	(codes M3R, M5R, M7R, M9R, H3R, H8R, M3V, M9V, H3V)	1	---- ---	4212 VR7	---- ---	4212 VR7	4212 VR7
	Fastener (attaching)	10	---- ---	6008 222	---- ---	6008 222	6008 222
	Nut (attaching)	10	---- ---	116 000	116 000	116 000	116 000
	(ash receiver pad and support)						
	(codes M3B, M7B, M8B, M9B, M9C, H3B, H7B, H3C)	1	---- ---	4206 AB8	---- ---	4206 AB8	4206 AB8
	(codes M3K, M9K)	1	---- ---	4206 AM9	---- ---	4206 AM9	4206 AM9
	(code M7Q)	1	---- ---	4206 AQ8			
	(codes M3T, M7T, M9T, H7T)	1	---- ---	4206 AY8	---- ---	4206 AY8	4206 AY8
	(codes M3W, M5W, M9W, H3W, H8W, M5X, M9X, H3X, H8X, H6A, H7A, M7N, M7P, M8N)	1	---- ---	*4206 VX8	---- ---	*4206 VX8	*4206 VX8
	(codes M7G, M8G, M7G)	1	---- ---	4206 VF9	---- ---	4206 VF9	
	(codes M3R, M5R, M7R, M9R, H3R, H8R, M3V, M9V, H3V)	1	---- ---	4206 VR7	---- ---	4206 VR7	4206 VR7
	(lower switch plate trim pad)						
	(codes M3B, M3C, M7B, M8B, M9B, M9C, H3B, H7B)	1	---- ---	4226-7 AB8	---- ---	4226-7 AB8	4226-7 AB8
	(codes M7G, M8G, H7G) Right	1	---- ---	4226 VF9	---- ---	4226 VF9	
	Left	1	---- ---	4227 AF9	---- ---	4227 AF9	
	(codes M3K, M9K)	1	---- ---	4226-7 AM9	---- ---	4226-7 AM9	
	(codes M3W, M5W, M9W, H3W, H8W, M3X, M5X, M9X, H3X, H8X, M7N, M7P, M8N, H6A, H7A) Right	1	---- ---	4226 VX8	---- ---	4226 VX8	4226 VX8
	Left	1	---- ---	4227 AX8	---- ---	4227 AX8	4227 AX8
	(code M7Q)	1	---- ---	4226-7 AQ8			
	(codes M3R, M5R, M7R, M9R, H3R, H8R, M3V, M9V, H3V) Right	1	---- ---	4226 VR7	---- ---	4226 VR7	4226 VR7
	Left	1	---- ---	4227 AR7	---- ---	4227 AR7	4227 AR7
	(codes M3T, M7T, M9T, H7T)	1	---- ---	*4226-7 AY8	---- ---	*4226-7 AY8	*4226-7 AY8
	Nut (attaching)	10	---- ---	116 000	---- ---	116 000	116 000
23-84-31	ORNAMENT, Folding Top Dust Boot Cover						
	Y1-M	2	---- ---	---- ---	---- ---	---- ---	2401 231

★ Indicates use as required.
⊟ Indicates parts not listed in any previous parts book.
Right and left part numbers are on same line, first number is right, second number is left.
• Indicates change or addition.

MyMopar.com

Printed in U.S.A.
Prices and specifications subject to change without notice.
April 1966, Supersedes May 1965.

CODE	REMARKS	PER CAR	SED.	4D H.T	STA. WGN.	2D H.T	CV. CP.
23-86-2	COVER, Roof Outside						
	C1, C2, C3 (6 window sedan)						
	(white)	1	7241 AW1	---- ---	7576-7 AW1	7199 AW1	
	(black)	1	7241 AX8	---- ---	7576-7 AX8	7199 AX8	
	C2-M, C1-L (white)	1	---- ---	7174 AW1			
	(black)	1	---- ---	7174 AX8			
	Y1-M (white)	1	---- ---	7277 AW1	---- ---	*4975 VW1	
	(black)	1	---- ---	7277 AX8	---- ---	*4975 VX8	
	(dark tan)	1	---- ---	4975 AL8	---- ---	4975 AL8	
	Y1-H (blue)	1	---- ---	4975 VB1			
	(white)	1	---- ---	4975 VW1			
	(black)	1	---- ---	4975 VX8	---- ---	*4975 VX8	
	(dark tan)	1	---- ---	4975 AL8			
23-86-3	HEADLINING and LISTING						
	C1, C2, C3 (rear quarter upper trim panel) (above belt line)						
	(code L1B)	1	3504-5 AB3				
	(code L1Q)	1	3504-5 AQ3				
	(codes L1N, L1R)	1	3504-5 AW2				
	(code L1T)	1	3504-5 AT3				
	(6 window sedan) (non-perforated)						
	(code L5B)	1	3504-5 AB3				
	(code L5R)	1	3504-5 AW2				
	(code L5T)	1	3504-5 AT3				
	(codes L4B, L8B)	1	---- ---	2052-3 AB3	---- ---	2090-1 AB3	
	(code L8Q)	1	---- ---	2052-3 AQ3	---- ---	2090-1 AQ3	
	(codes L4L, L4N, L4R, L8R)	1	---- ---	2052-3 AW2	---- ---	2090-1 AW2	
	(code L8T)	1	---- ---	2052-3 AT3	---- ---	2090-1 AT3	
	(code M4B)	1	---- ---	2052-3 AB3			
	(codes M1N, M4R, M4W)	1	---- ---	2052-3 AW2			
	(code M4T)	1	---- ---	2052-3 AT3			
	(code M4X)	1	---- ---	2052-3 AX9			
	(perforated)						
	(codes H1B, H4B)	1	*2052-3 AB3	*2052-3 AB3	---- ---	*2052-3 AB3	
	(code H1Q)	1	2052-3 AQ3	*2052-3 AQ3	---- ---	2052-3 AQ3	
	(codes H1N, H1R, H4R)	1	2052-3 AW2	*2052-3 AW2	---- ---	2052-3 AW2	
	(code H1T)	1	2052-3 AT3	*2052-3 AT3	---- ---	2052-3 AT3	
	(codes H1L, H4L)	1	2052-3 AY3	*2052-3 AY3	---- ---	2052-3 AY3	
	(code H4X)	1	2052-3 AX9	---- ---	---- ---	2052-3 AX9	
	(perforated)						
	(code L5B)	1	3504-5 AB3				
	(code L5R)	1	3504-5 AW2				
	(code L5T)	1	3504-5 AT3				
	(codes L2B, H1B, H4B)	1	3542-3 AB3				
	(codes L2R, L2N, H1N, H1R, H4R)	1	3542-3 AW2				
	(codes L2T, H1T, H4T)	1	3542-3 AT3				
	(codes L2L, H1L, H1Y)	1	3542-3 AY3				
	(codes L2Q, H1Q)	1	3542-3 AQ3				
	(suede finish)						
	(code H4B)	1	---- ---	3502-3 AB4	---- ---	3502-3 AB4	
	(code H4L)	1	---- ---	3502-3 AT4	---- ---	3502-3 AT4	
	(code H4R)	1	---- ---	3502-3 AW2	---- ---	3502-3 AW2	
	(code H4X)	1	---- ---	3502-3 AA2	---- ---	3502-3 AA2	
	(code H1B)	1	---- ---	3500-1 AB4			
	(code H1Q)	1	---- ---	3500-1 AQ4			

★ Indicates use as required.
⊟ Indicates parts not listed in any previous parts book.
April 1966, Supersedes May 1965.

Printed in U.S.A.
Prices and specifications subject to change without notice.
Right and left part numbers are on same line, first number is right, second number is left.
• Indicates change or addition.

MyMopar.com

CODE	REMARKS	PER CAR	SED.	4D H.T	STA. WGN.	2D H.T	CV. CP.
23-86-3	HEADLINING and LISTING - Cont'd						
	C1, C2, C3 (rear quarter upper trim panel) (above belt line)						
	(suede finish)						
	(codes H1N, H1R)	1	---- ---	3500-1 AW2			
	(code H1T)	1	---- ---	3500-1 AT6			
	(code H1L)	1	---- ---	3500-1 AT4			
	(vinyl finish)						
	(codes M3R, P3R, M4R, P4R, M4W, P4W)	1	---- ---	---- ---	---- ---	2090-1 AW2	
	(codes M3X, P3X, M4X, L9X, P4X)	1	---- ---	---- ---	---- ---	2090-1 AX9	
	(codes M4L, P4L)	1	---- ---	---- ---	---- ---	2090-1 AY3	
	(codes M4T, P4T)	1	---- ---	---- ---	---- ---	2090-1 AT3	
	(perforated)						
	(codes M3B, M7B)	1	---- ---	3544-5 AB3			
	(codes M3X, M5X, M7P)	1	---- ---	3544-5 AX9			
	(code M3K)	1	---- ---	3544-5 AM2			
	(codes M3C, M3V, M3W, M3R, M5W, M5R, M7N, M7R)	1	---- ---	3544-5 AW2			
	(code M7Q)	1	---- ---	3544-5 AQ3			
	(codes M3T, M7T, M7G)	1	---- ---	3544-5 AL3			
	Y1-H						
	(codes H3B, H7B)	1	---- ---	2030-1 AB4			
	(code H7G)	1	---- ---	2030-1 AL2			
	(codes H3C, H3V, H3W, H3R, H8R, H8W)	1	--- ---	2030-1 AW2			
	(code H7T)	1	---- ---	2030-1 AT6			
	(codes H6A, H7A, H3X, H8X)	1	---- ---	2030-1 AA2			
	(vinyl coated foam)						
	(codes H3B, H7B)	1	---- ---	7344-5 AB3			
	(code H7G)	1	---- ---	7344-5 AL3			
	(codes H3C, H3V, H3W, H3R, H8R, H8W)	1	---- ---	7344-5 AW2			
	(code H7T)	1	---- ---	7344-5 AL3			
	(codes H6A, H7A, H3X, H8X)	1	---- ---	7344-5 AA2			
	Y1-M (suede coated)						
	(codes M8B, M9B)	1	---- ---	---- ---	---- ---	2028-9 AB4	
	(code M8G)	1	---- ---	---- ---	---- ---	2028-9 AL2	
	(codes M8N, M9C, M9V, M9W, M9R)	1	---- ---	---- ---	---- ---	2028-9 AW2	
	(code M9T)	1	---- ---	---- ---	---- ---	2028-9 AT6	
	(code M9X)	1	---- ---	---- ---	---- ---	2028-9 AA2	
	(code M9K)	1	---- ---	---- ---	---- ---	2028-9 AM2	
	(vinyl coated foam)						
	(codes M8B, M9B)	1	---- ---	---- ---	---- ---	7338-9 AB3	
	(code M8G)	1	---- ---	---- ---	---- ---	7338-9 AL3	
	(codes M8N, M9C, M9V, M9W, M9R)	1	---- ---	---- ---	---- ---	7338-9 AW2	
	(code M9T)	1	---- ---	---- ---	---- ---	7338-9 AL3	
	(code M9X)	1	---- ---	---- ---	---- ---	7338-9 AA2	
	(code M9K)	1	---- ---	---- ---	---- ---	7338-9 AM2	
	Fastener (attaching)	6	---- ---	6000 365	---- ---	6000 365	

★ Indicates use as required.
⊟ Indicates parts not listed in any previous parts book.
Right and left part numbers are on same line, first number is right, second number is left.
• Indicates change or addition.

MyMopar.com

CODE	REMARKS	PER CAR	SED.	4D H.T	STA. WGN.	2D H.T	CV. CP.
23-86-3	HEADLINING and LISTING - Cont'd						
	C1, C2, C3						
	(code L1B)	1	7165 AB3				
	(codes L1N, L1R)	1	7165 AW2				
	(code L1T)	1	7165 AT3				
	(code L1Q) (6 window sedan)	1	7165 AQ3				
	(code L5B)	1	7165 AB3				
	(code L5R)	1	7165 AW2				
	(code L5T)	1	*7165 AT3				
	(codes L2B, H1B, H4B)	1	7165 AB3				
	(codes L2R, L2N, H1N, H1R, H4R)	1	7165 AW2				
	(codes L2T, H1T, H4T)	1	7165 AT3				
	(codes L2L, H1L, H1Y)	1	7165 AY3				
	(codes L2Q, H1Q)	1	7165 AQ3				
	(codes L4B, M4B, L8B, H1B, H4B)	1	---- ---	7167 AB3	---- ---	7167 AB3	
	(codes M4T, L8T)	1	---- ---	7167 AT3	---- ---	7167 AT3	
	(codes L4N, L4R, L8R, M1N M4R, M4W, H1N, H1R, H4R)	1	---- ---	7167 AW2	---- ---	7167 AW2	
	(codes L8Q, , H1Q)	1	---- ---	7167 AQ3	---- ---	7167 AQ3	
	(codes L4L, H1L, H4L)	1	---- ---	7167 AY3	---- ---	7167 AY3	
	(codes M4X, H4X)	1	---- ---	7167 AX9	---- ---	7167 AX9	
	C1-L						
	(codes L4B, L8B, L9B)	1	---- ---	---- ---	---- ---	7135 AB3	
	(code L8Q)	1	---- ---	---- ---	---- ---	7135 AQ3	
	(code L8T)	1	---- ---	---- ---	---- ---	7135 AT3	
	(codes L4N, L4R, L8R, L9R)	1	---- ---	---- ---	---- ---	7135 AW2	
	(code L4L)	1	---- ---	---- ---	---- ---	7135 AY3	
	(code L9X)	1	---- ---	---- ---	---- ---	7135 AX9	
	C2-M, C2-P						
	(codes M4B, P4B, L9B)	1	---- ---	---- ---	---- ---	7135 AB3	
	(codes M4T, P4T)	1	---- ---	---- ---	---- ---	7135 AT3	
	(codes M3R, M4R, M4W, P3R, P4R, P4W)	1	---- ---	---- ---	---- ---	7135 AW2	
	(codes M4L, P4L)	1	---- ---	---- ---	---- ---	7135 AY3	
	(codes M3X, M4X, P3X, P4X)	1	---- ---	---- ---	---- ---	7135 AX9	
	Y1 (suede coated foam) (rear window opening)						
	(codes M8B, M9B, H3B, H7B)	1	---- ---	1021 AB4	---- ---	1021 AB4	
	(codes M8G, H7G)	1	---- ---	1021 AL2	---- ---	1021 AL2	
	(codes M8N, M9C, M9R, M9V, M9W, H3C, H3R, H3V, H3W, H8R, H8W)	1	---- ---	1021 AW2	---- ---	1021 AW2	
	(code M9K)	1	---- ---	---- ---	---- ---	1021 AM2	
	(codes M9T, H7T)	1	---- ---	1021 AT6	---- ---	1021 AT6	
	(codes M9X, H7A, H6A, H3X, H8X)	1	---- ---	1021 AA2	---- ---	1021 AA2	
	(vinyl coated foam) (rear window opening)						
	(codes M8B, M9B, H3B, H7B)	1	---- ---	7342 AB3	---- ---	7342 AB3	
	(codes M8G, H7G)	1	---- ---	7342 AL3	---- ---	7342 AL3	
	(codes M8N, M9C, M9V, M9W, M9R, H3C, H3V, H3W, H8R, H8W)	1	---- ---	7342 AW2	---- ---	7342 AW2	
	(code M9K)	1	---- ---	7342 AM2	---- ---	7342 AM2	
	(codes M9T, H7T)	1	---- ---	7342 AL3	---- ---	7342 AL3	
	(codes M9X, H3X, H8X, H6A, H7A)	1	---- ---	7342 AA2	---- ---	7342 AA2	
	Fastener	12	---- ---	6000 365	---- ---	6000 365	

★ Indicates use as required.
⊟ Indicates parts not listed in any previous parts book.

April 1966, Supersedes May 1965.

MyMopar.com

Printed in U.S.A.
Prices and specifications subject to change without notice.
Right and left part numbers are on same line, first number is right, second number is left.
* Indicates change or addition.

CODE	REMARKS	PER CAR	SED.	4D H.T	STA. WGN.	2D H.T	CV. CP.
23-86-3	HEADLINING and LISTING - Cont'd						
	C3-H (panel)						
	(codes H1B, H4B)						
	(No. 1)	1	---- ---	1010 AB4	---- ---	1010 AB4	
	(No. 2)	1	---- ---	1012 AB4	---- ---	1012 AB4	
	(No. 3)	1	---- ---	1012 AB4	---- ---	1012 AB4	
	(No. 4)	1	---- ---	1013 AB4	---- ---	1013 AB4	
	(No. 5)	1	---- ---	1014 AB4	---- ---	1014 AB4	
	(codes H1Q, H4Q)						
	(No. 1)	1	---- ---	1010 AQ4	---- ---	1010 AQ4	
	(No. 2)	1	---- ---	1012 AQ4	---- ---	1012 AQ4	
	(No. 3)	1	---- ---	1012 AQ4	---- ---	1012 AQ4	
	(No. 4)	1	---- ---	1013 AQ4	---- ---	1013 AQ4	
	(No. 5)	1	---- ---	1014 AQ4	---- ---	1014 AQ4	
	(codes H1R, H4R, H1N)						
	(No. 1)	1	---- ---	1010 AW2	---- ---	1010 AW2	
	(No. 2)	1	---- ---	1012 AW2	---- ---	1012 AW2	
	(No. 3)	1	---- ---	1012 AW2	---- ---	1012 AW2	
	(No. 4)	1	---- ---	1013 AW2	---- ---	1013 AW2	
	(No. 5)	1	---- ---	1014 AW2	---- ---	1014 AW2	
	(codes H1T, H4T)						
	No. 1)	1	---- ---	1010 AT6	---- ---	1010 AT6	
	(No. 2)	1	---- ---	1012 AT6	---- ---	1012 AT6	
	(No. 3)	1	---- ---	1012 AT6	---- ---	1012 AT6	
	(No. 4)	1	---- ---	1013 AT6	---- ---	1013 AT6	
	(No. 5)	1	---- ---	1014 AT6	---- ---	1014 AT6	
	(codes H1L, H4L)						
	(No. 1)	1	---- ---	1010 AT4	---- ---	1010 AT4	
	(No. 2)	1	---- ---	1012 AT4	---- ---	1012 AT4	
	(No. 3)	1	---- ---	1012 AT4	---- ---	1012 AT4	
	(No. 4)	1	---- ---	1013 AT4	---- ---	1013 AT4	
	(No. 5)	1	---- ---	1014 AT4	---- ---	1014 AT4	
	(code H4X)						
	(No. 1)	1	---- ---	1010 AA2	---- ---	1010 AA2	
	(No. 2)	1	---- ---	1012 AA2	---- ---	1012 AA2	
	(No. 3)	1	---- ---	1012 AA2	---- ---	1012 AA2	
	(No. 4)	1	---- ---	1013 AA2	---- ---	1013 AA2	
	(No. 5)	1	---- ---	1014 AA2	---- ---	1014 AA2	
	C1, C3 (panel) (embossed screen finish)						
	(codes L4B, H4B)						
	(No. 1)	1	---- ---	---- ---	*1051 AB3		
	(No. 2)	1	---- ---	---- ---	1052 AB3		
	(No. 3)	1	---- ---	---- ---	1054 AB3		
	(No. 4)	1	---- ---	---- ---	1054 AB3		
	(No. 5)	1	---- ---	---- ---	1055 AB3		
	(No. 6)	1	---- ---	---- ---	1056 AB3		
	(No. 7) (w or w/o dome light cutout)	1	---- ---	---- ---	*1057 AB3		
	(w/air conditioning) (rear unit) (codes L4R, L4X, L4T, L4B, H1N, H4B, H4T, H4R, H4X)						
	(No. 1)	1	---- ---	---- ---	1051 AW2		
	(No. 2)	1	---- ---	---- ---	1052 AW2		
	(No. 3)	1	---- ---	---- ---	1054 AW2		
	(No. 4)	1	---- ---	---- ---	1054 AW2		
	(No. 5)	1	---- ---	---- ---	1055 AW2		
	(No. 6)	1	---- ---	---- ---	1056 AW2		
	(No. 7) (w or w/o dome light cutout)	1	---- ---	---- ---	*1057 AW2		

★ Indicates use as required.
B Indicates parts not listed in any previous parts book.
Right and left part numbers are on same line, first number is right, second number is left.
* Indicates change or addition.

MyMopar.com

Printed in U.S.A.
Prices and specifications subject to change without notice.
April 1966, Supersedes May 1965.

CODE	REMARKS	PER CAR	SED.	4D H.T	STA. WGN.	2D H.T	CV. CP.
23-86-3	HEADLINING and LISTING - Cont'd						
	C1, C3 (panel)						
	(w/o air conditioning)						
	(codes L4R, L4X, L4T, L4B, H1N, H4B, H4T, H4R, H4X)						
	(No. 1)	1	---- ---	---- ---	1051 AT3		
	(No. 2)	1	---- ---	---- ---	1052 AT3		
	(No. 3)	1	---- ---	---- ---	1054 AT3		
	(No. 4)	1	---- ---	---- ---	1054 AT3		
	(No. 5)	1	---- ---	---- ---	1055 AT3		
	(No. 6)	1	---- ---	---- ---	1056 AT3		
	(No. 7) (w or w/o dome light cutout)	1	---- ---	---- ---	*1057 AT3		
	(smooth finish)						
	(codes L4B, H4B)						
	(No. 1)	1	---- ---	---- ---	*1051 ABB		
	(No. 2)	1	---- ---	---- ---	*1052 ABB		
	(No. 3)	1	---- ---	---- ---	*1054 ABB		
	(No. 4)	1	---- ---	---- ---	*1054 ABB		
	(No. 5)	1	---- ---	---- ---	*1055 ABB		
	(No. 6)	1	---- ---	---- ---	*1056 ABB		
	(No. 7) (w or w/o dome light cutout)	1	---- ---	---- ---	*1057 ABB		
	(w/air cond. rear unit)						
	(codes L4R, L4X, L4T, L4B, H1N, H4B, H4T, H4R, H4X)						
	(No. 1)	1	---- ---	---- ---	*1051 AWW		
	(No. 2)	1	---- ---	---- ---	*1052 AWW		
	(No. 3)	1	---- ---	---- ---	*1054 AWW		
	(No. 4)	1	---- ---	---- ---	*1054 AWW		
	(No. 5)	1	---- ---	---- ---	*1055 AWW		
	(No. 6)	1	---- ---	---- ---	*1056 AWW		
	(No. 7) (w or w/o dome light cutout)	1	---- ---	---- ---	*1057 AWW		
	(w/o air Cond.)						
	(codes L4R, L4X, L4T, L4B, H1N, H4B, H4T, H4R, H4X)						
	(No. 1)	1	---- ---	---- ---	*1051 ATT		
	(No. 2)	1	---- ---	---- ---	*1052 ATT		
	(No. 3)	1	---- ---	---- ---	*1054 ATT		
	(No. 4)	1	---- ---	---- ---	*1054 ATT		
	(No. 5)	1	---- ---	---- ---	*1055 ATT		
	(No. 6)	1	---- ---	---- ---	*1056 ATT		
	(No. 7) (w or w/o dome light cutout)	1	---- ---	---- ---	*1057 ATT		
	Y1 (panel) (suede coated foam)						
	(codes M8B, M9B, H3B, H7B)						
	(No. 1)	1	---- ---	1073 AB4	---- ---	1073 AB4	
	(No. 2)	1	---- ---	1074 AB4	---- ---	1074 AB4	
	(No. 3)	1	---- ---	1075 AB4	---- ---	1075 AB4	
	(No. 4)	1	---- ---	1076 AB4	---- ---	1076 AB4	
	(No. 5)	1	---- ---	1077 AB4	---- ---	1077 AB4	
	(codes M8G, H7G)						
	(No. 1)	1	---- ---	1073 AT6	---- ---	1073 AT6	
	(No. 2)	1	---- ---	1074 AT6	---- ---	1074 AT6	
	(No. 3)	1	---- ---	1075 AT6	---- ---	1075 AT6	
	(No. 4)	1	---- ---	1076 AT6	---- ---	1076 AT6	
	(No. 5)	1	---- ---	1077 AT6	---- ---	1077 AT6	

★ Indicates use as required.
⊟ Indicates parts not listed in any previous parts book.
April 1966, Supersedes May 1965.

Printed in U.S.A.
Prices and specifications subject to change without notice.
Right and left part numbers are on same line, first number is right, second number is left.
* Indicates change or addition.

MyMopar.com

CODE	REMARKS	PER CAR	SED.	4D H.T.	STA. WGN.	2D H.T.	CV. CP.
23-86-3	HEADLINING and LISTING - Cont'd						
	Y1 (panel) (suede coated foam)						
	(codes M8N, M9C, M9V, M9W, M9R, H3C, H3V, H3W, H8R, H8W)						
	(No. 1)	1	---- ---	1073 AW2	---- ---	1073 AW2	
	(No. 2)	1	---- ---	1074 AW2	---- ---	1074 AW2	
	(No. 3)	1	---- ---	1075 AW2	---- ---	1075 AW2	
	(No. 4)	1	---- ---	1076 AW2	---- ---	1076 AW2	
	(No. 5)	1	---- ---	1077 AW2	---- ---	1077 AW2	
	(codes M9T, H7T)						
	(No. 1)	1	---- ---	1073 AT6	---- ---	1073 AT6	
	(No. 2)	1	---- ---	1074 AT6	---- ---	1074 AT6	
	(No. 3)	1	---- ---	1075 AT6	---- ---	1075 AT6	
	(No. 4)	1	---- ---	1076 AT6	---- ---	1076 AT6	
	(No. 5)	1	---- ---	1077 AT6	---- ---	1077 AT6	
	(codes M9X, H3X, H6A, H7A, H8X)						
	(No. 1)	1	---- ---	1073 AA2	---- ---	1073 AA2	
	(No. 2)	1	---- ---	1074 AA2	---- ---	1074 AA2	
	(No. 3)	1	---- ---	1075 AA2	---- ---	1075 AA2	
	(No. 4)	1	---- ---	1076 AA2	---- ---	1076 AA2	
	(No. 5)	1	---- ---	1077 AA2	---- ---	1077 AA2	
	(code M9K)						
	(No. 1)	1	---- ---	---- ---	---- ---	1073 AA2	
	(No. 2)	1	---- ---	---- ---	---- ---	1074 AA2	
	(No. 3)	1	---- ---	---- ---	---- ---	1075 AA2	
	(No. 4)	1	---- ---	---- ---	---- ---	1076 AA2	
	(No. 5)	1	---- ---	---- ---	---- ---	1077 AA2	
	Y1 (vinyl coated foam)						
	(codes M8B, M9B, H3B, H7B)	1	---- ---	7336 AB3	---- ---	7336 AB3	
	(codes M8G, M7G, M8T, M9T)	1	---- ---	7336 AL3	---- ---	7336 AL3	
	(codes M8N, M9C, M9V, M9W, M9R, H3C, H3V, H3W, H3R, H8R, H8W)	1	---- ---	7336 AW2	---- ---	7336 AW2	
	(code M9K)	1	---- ---	7336 AM2	---- ---	7336 AM2	
	(codes H6A, H7A, M9X, H3X, H8X)	1	---- ---	7336 AA2	---- ---	7336 AA2	
	Y1-M (w/all black interior)						
	(codes M3X, M5X)	1	---- ---	*7793 AX9			
	(codes M3B, M7B)	1	---- ---	7188 AB2			
	(codes M7N, M3R, M7R, M3C, M3V, M3W, M5W, M5R)	1	---- ---	7793 AW2			
	(codes M7P, M3X, M5X)	1	---- ---	7188 AA2			
	(code M7Q)	1	---- ---	7188 AQ2			
	(codes M3T, M7T, M7G)	1	---- ---	7188 AT2			
	(code M3K)	1	---- ---	7188 AM2			
	(perforated)						
	(codes M3B, M7B)	1	---- ---	7793 AB3			
	(codes M7N, M7P)	1	---- ---	*7793 AW2			
	(codes M3R, M5R, M7R, M3C, M3V, M3W, M5W)	1	---- ---	*7793 AM2			
	(codes M3X, M5X)	1	---- ---	7793 AX9			
	(code M7Q)	1	---- ---	7793 AQ3			
	(codes M3T, M7T)	1	---- ---	7793 AL3			
	(code M3K)	1	---- ---	7793 AM2			
	Fastener (listing wire to roof rail or support)	12	---- ---	6001 873	---- ---	6001 873	

★ Indicates use as required.
⊟ Indicates parts not listed in any previous parts book.
April 1966.

Printed in U.S.A.
Prices and specifications subject to change without notice.
Right and left part numbers are on same line, first number is right, second number is left.
* Indicates change or addition.

MyMopar.com

CODE	REMARKS	PER CAR	SED.	4D H.T.	STA. WGN.	2D H.T.	CV. CP.

NOTES

★ Indicates use as required.
⊟ Indicates parts not listed in any previous parts book.

Printed in U.S.A.
Prices and specifications subject to change without notice.
April 1966.

MyMopar.com

CODE	REMARKS	PER CAR	SED.	4D H.T	STA. WGN.	2D H.T	CV. CP.
23-86-8	RETAINER, Roof Outside Cover						
	C3-H (6 window sedan)						
	(side front)	1	2603 280-1				
	(side rear)	2	2573 692				
	(side)	1	---- ---	---- ---	2603 278-9		
	(applique retainer) (upper)	2	---- ---	2574 073	---- ---	2574 073	
	Screw (applique retainer)	8	---- ---	6024 271	---- ---	6024 271	
	C2-P (side front)	2	---- ---	---- ---	---- ---	2603 276-7	
	Y1 (side front)	1	---- ---	2483 788-9	---- ---	2483 788-9	
	(side rear)	1	---- ---	2483 790-1	---- ---	2483 790-1	
23-86-10	SUPPORT, Roof Bow						
	C1, C2, C3	2	2482 276	2482 270	---- ---	2482 270	
		1	---- ---	---- ---	---- ---	2482 273	
	(Nos. 1 and 2)	2	---- ---	---- ---	2483 992		
	(No. 3)	1	---- ---	---- ---	2482 279		
	Y1	2	---- ---	2218 749	---- ---	2218 749	
23-86-11	RETAINER, Side Rail Roof Bow						
	C1, C2, C3	★	2482 581	2482 581	2482 581	2482 581	
	(rear bow moulding)	1	---- ---	---- ---	---- ---	---- ---	2581 893
	Screw (attaching)	2	---- ---	---- ---	---- ---	---- ---	6025 692
23-86-14	PAD, Air Cond. Roof Evaporating Unit Trim						
	C1, C3	1	---- ---	---- ---	*2485 395		
23-86-16	SUPPORT, Roof Inside Finish Panel Rear						
	C3-H (moulding support)	6	---- ---	2581 302	---- ---	2581 302	
	Y1	6	---- ---	2216 461	---- ---	2216 461	
	Fastener	6	---- ---	6000 922	---- ---	6000 922	
23-86-19	STRIP, Headlining Retaining						
	C1, C2, C3						
	(front)	1	2482 372-3				
	(rear)	1	2484 544-5				
	(rear window) (upper)	1	2526 956	2484 046	---- ---	2527 803	
	(rear window) (side)	1	2526 954-5	2484 048-9	---- ---	2527 822-3	
	Screw (rear window side retainer)	4	6023 248	6023 248	---- ---	6023 248	
	(rear quarter)	1	---- ---	2581 694-5			
	(rear corner)	1	---- ---	---- ---	2482 382-3		
	C1, C2, C3						
	(side front)	1	---- ---	---- ---	2482 374-5		
	(side rear)	1	---- ---	---- ---	*2602 136-7		
	(side rear w/air cond.)	1	---- ---	---- ---	2602 136-7		
	C3-H (rear window) (side)	1	---- ---	2484 048-9	---- ---	2484 048-9	
	(head-lining and garnish moulding)						
	(front)	1	---- ---	2484 072-3	---- ---	2527 804-5	
	(rear)	1	---- ---	2484 074-5	---- ---	2527 806-7	
	Fastener (retainer)	★	6000 922	6000 922	6000 922	6000 922	
	Screw	8	6023 248	6023 248	---- ---	6023 248	

★ Indicates use as required.
⊟ Indicates parts not listed in any previous parts book.
Right and left part numbers are on same line, first number is right, second number is left.
• Indicates change or addition.

MyMopar.com

Printed in U.S.A.
Prices and specifications subject to change without notice.
April 1966, Supersedes May 1965.

CODE	REMARKS	PER CAR	SED.	4D H.T	STA. WGN.	2D H.T	CV. CP.
23-86-19	STRIP, Headlining Retaining - Cont'd						
	C3-H						
	(listing and dome lamp support wire retainer) (short)	★	2581 273	2581 273	---- ---	2581 273	
	(medium)	★	2581 274	2581 274	---- ---	2581 274	
	(long)	★	2581 275	2581 275	---- ---	2581 275	
	Fastener (retainer)	★	6000 922	6000 922	---- ---	6000 922	
	Y1 (quarter panel)	2	---- ---	2492 339	---- ---	2492 339	
	Screw (attaching)	30	---- ---	6024 271	---- ---	6024 271	
23-86-20	APPLIQUE, Roof Outside Quarter						
	C3-H (light blue)	1	---- ---	4130-1 AB1	---- ---	4130-1 AB1	
	(dark blue)	1	---- ---	4130-1 AB6	---- ---	4130-1 AB6	
	(tan)	1	---- ---	4130-1 AT4	---- ---	4130-1 AT4	
	(dark tan)	1	---- ---	4130-1 AT6	---- ---	4130-1 AT6	
	(turquoise)	1	---- ---	4130-1 AQ6	---- ---	4130-1 AQ6	
	(white)	1	---- ---	4130-1 AW1	---- ---	4130-1 AW1	
	(yellow green)	1	---- ---	4130-1 AF4	---- ---	4130-1 AF4	
	(red)	1	---- ---	4130-1 AR7	---- ---	4130-1 AR7	
	(gray)	1	---- ---	4130-1 AA6	---- ---	4130-1 AA6	
	(light gold)	1	---- ---	4130-1 AY1	---- ---	4130-1 AY1	
	(dark gold)	1	---- ---	4130-1 AY6	---- ---	4130-1 AY6	
	(black)	1	---- ---	4130-1 AX8	---- ---	4130-1 AX8	
	Screw (attaching)	8	---- ---	6024 271	---- ---	6024 271	
23-86-24	RETAINER, Roof Inside Finish Panel Moulding						
	C1, C3	6	---- ---	---- ---	2581 461		
	Y1	4	---- ---	2499 505	---- ---	2499 505	
	(w/shield header trim)	1	---- ---	2188 680-1	---- ---	2188 680-1	
23-86-33	SPACER, Rear Upper Headlining Panel						
	C1, C3 (No. 7)	2	---- ---	---- ---	2656 442		
23-86-35	MOULDING, Roof Headlining Finish						
	C1, C3						
	(Nos. 1, 2, 3, 4, 5, 6) (chrome)	6	---- ---	---- ---	2440 144		
	C3-H, Y1 (plastic w/foam cover) (suede finish) (Nos. 1, 2, 3, 4)						
	(codes M8B, M9B, H1B, H3B, H4B, H7B)	4	---- ---	1079 AB4	---- ---	1079 AB4	
	(codes H1Q, H7Q)	4	---- ---	1082 AQ4	---- ---	1082 AQ4	
	(codes H1R, H3R, H4R, H8R, M9R, M8N, H1N, H3C, H3V, H3W, H8W, M9C, M9V, M9W)	4	---- ---	1079 AW2	---- ---	1079 AW2	
	(codes H1T, H4T, H7T, M9T)	4	---- ---	1079 AT6	---- ---	1079 AT6	
	(codes H1L, H4L)	4	---- ---	1018 AT4	---- ---	1018 AT4	
	(codes H3X, H4X, H8X, M9X, H6A, H7A)	4	---- ---	1079 AA2	---- ---	1079 AA2	
	(codes M8G, H7G)	4	---- ---	1079 AL2	---- ---	1079 AL2	
	(code M9K)	4	---- ---	---- ---	---- ---	1079 AM2	
	C1, C2 (rear bow)	1	---- ---	---- ---	---- ---	---- ---	2581 892
	Screw (support)	12	---- ---	6024 402	---- ---	6024 402	

★ Indicates use as required.
⊟ Indicates parts not listed in any previous parts book.
April 1966, Supersedes May 1965.

Printed in U.S.A.
Prices and specifications subject to change without notice.
Right and left part numbers are on same line, first number is right, second number is left.
* Indicates change or addition.

MyMopar.com

CODE	REMARKS	PER CAR	SED.	4D H.T	STA. WGN.	2D H.T	CV. CP.
23-86-36	CAP, Roof Headlining Finish Moulding						
	C1, C3	12	---- ---	---- ---	1759 636		
23-91-6	PANEL, Cowl Trim						
	C1, C2, C3						
	(codes L1B, L2B, L4B, L5B, L8B, L9B, M4B, H1B, H4B, P4B)	1	1422-3 AB8	1422-3 AB8	1422-3 AB8	1422-3 AB8	1422-3 AB8
	(codes L1Q, L2Q, L8Q, H1Q)	1	1422-3 AQ8	1422-3 AQ8	---- ---	1422-3 AQ8	
	(codes L1R, L2R, L4R, L5R, L8R, L9R, M3R, M4R, H1R, H4R, P4R)	1	1422-3 AR8	1422-3 AR8	1422-3 AR8	1422-3 AR8	1422-3 AR8
	(codes L1T, L2T, L4T, L5T, L8T, M4T, H1T, H4T, P4T)	1	1422-3 AT8	1422-3 AT8	1422-3 AT8	1422-3 AT8	1422-3 AT8
	(codes M4W, P4W)	1	---- ---	1406-7 AW3	---- ---	1406-7 AW3	1406-7 AW3
	(codes L1N, L2N, L4N, M1N, H1N, L2L, L4L, M4L, H1L, H4L, P4L, L4X, L9X, M3X, M4X, H4X, P3X, P4X)	1	1422-3 AX9	1422-3 AX9	1422-3 AX9	1422-3 AX9	1422-3 AX9
	(extension) (paint as required)	1	---- ---	1426-7 AX9	---- ---	1426-7 AX9	1426-7 AX9
	Screw	4	---- ---	9415 214	---- ---	9415 214	⊟9415 214
	Y1 (w/carpet)						
	(codes M3B, M3C, H3B, H3C, M7B, H7B, M9B, M9C)	1	---- ---	1414-5 AB6	---- ---	1414-5 AB6	1414-5 AB6
	(codes M7G, M8G, H7G)	1	---- ---	1414-5 AF9	---- ---	1414-5 AF9	1414-5 AF9
	(codes M3K, M9K)	1	---- ---	1414-5 AM9	---- ---	1414-5 AM9	1414-5 AM9
	(codes M3W, M9W, H3W, M3X, M9X, H3X, M7N, M8N, H7P, H7A)	1	---- ---	1414-5 AX8	---- ---	1414-5 AX8	1414-5 AX8
	(code M7Q)	1	---- ---	1414-5 AQ6			
	(codes M3R, M7R, M9R, H3R, M3V, M9V, H3V)	1	---- ---	1414-5 AR5	---- ---	1414-5 AR5	1414-5 AR5
	*(codes M3T, M7T, M9T, H7T)	1	---- ---	1414-5 AL6	---- ---	1414-5 AL6	1414-5 AL6
	(metal) (primed)	1	---- ---	2492 000-1	---- ---	2492 000-1	
	Fastener	2	---- ---	6000 096	---- ---	6000 096	
23-91-20	CLIP, Cowl Side Trim Panel Retainer						
	C1, C2, C3 (upper)	2	2664 466	2664 466	2664 466	2664 466	2664 466
23-92-5	PANEL, Door Trim						
	C1-L (6 window sedan)						
	(codes L2B, L5B)						
	Front	1	3174-5 ABB				
	Rear	1	3200-1 ABB				
	(code L2N)						
	Front	1	3174-5 AXW				
	Rear	1	3200-1 AXW				
	(code L2Q)						
	Front	1	3174-5 AQQ				
	Rear	1	3200-1 AQQ				
	(codes L2R, L5R)						
	Front	1	3174-5 ARR				
	Rear	1	3200-1 ARR				
	(codes L2T, L5T)						
	Front	1	3174-5 ATT				
	Rear	1	3200-1 ATT				
	(code L2L)						
	Front	1	3174-5 AXY				
	Rear	1	3200-1 AXY				

★ Indicates use as required.
⊟ Indicates parts not listed in any previous parts book.
Right and left part numbers are on same line, first number is right, second number is left.
* Indicates change or addition.

MyMopar.com

Printed in U.S.A.
Prices and specifications subject to change without notice.
April 1966, Supersedes May 1965.

CODE	REMARKS	PER CAR	SED.	4D H.T	STA. WGN.	2D H.T	CV. CP.
23-92-5	PANEL, Door Trim - Cont'd						
	C1-L						
	(codes L1B, L5B)						
	Front	1	3100-1 ABB				
	Rear	1	3200-1 ABB				
	(code L1N)						
	Front Rt.	1	*3100 AXW				
	Lt.	1	*3403 AXW				
	Rear	1	3200-1 AXW				
	(code L1Q)						
	Front Rt.	1	*3100 AQQ				
	Lt.	1	*3403 AQQ				
	Rear	1	3200-1 AQQ				
	(codes L1R, L5R)						
	Front Rt.	1	*3100 ARR				
	Lt.	1	*3403 ARR				
	Rear	1	3200-1 ARR				
	(codes L1T, L5T)						
	Front	1	*3402-3 ATT				
	Rear	1	3200-1 ATT				
	C1-L						
	(codes L4B, L8B)						
	Front	1	---- ---	3102-3 ABB	*3102-3 ABB		
	Rear	1	---- ---	3202-3 ABB	*3204-5 ABB		
	(code L4L)						
	Front	1	---- ---	3102-3 AXY			
	Rear	1	---- ---	3202-3 AXY			
	(codes L4R, L8R)						
	Front	1	---- ---	3102-3 ARR	*3102-3 ARR		
	Rear	1	---- ---	3202-3 ARR	*3204-5 ARR		
	(code L8Q)						
	Front	1	---- ---	3102-3 AQQ			
	Rear	1	---- ---	3202-3 AQQ			
	(code L8T)						
	Front	1	---- ---	3102-3 ATT	*3102-3 ATT		
	Rear	1	---- ---	3202-3 ATT	*3204-5 ATT		
	(code L4N)						
	Front	1	---- ---	3102-3 AXW			
	Rear	1	---- ---	3202-3 AXW			
	(code L4X)						
	Front	1	---- ---	---- ---	*3102-3 AOX		
	Rear	1	---- ---	---- ---	*3204-5 AOX		
	C2-M						
	(code M1N)						
	Front	1	---- ---	3106-7 AXW			
	Rear	1	---- ---	3206-7 AXW			
	(code M4B)						
	Front	1	---- ---	3106-7 ABB			
	Rear	1	---- ---	3206-7 ABB			
	(code M4R)						
	Front	1	---- ---	3106-7 ARR			
	Rear	1	---- ---	3206-7 ARR			
	(code M4T)						
	Front	1	---- ---	3106-7 ATT			
	Rear	1	---- ---	3206-7 ATT			
	(code M4W)						
	Front	1	---- ---	3106-7 AOW			
	Rear	1	---- ---	3206-7 AOW			
	(code M4X)						
	Front	1	---- ---	3106-7 AOX			
	Rear	1	---- ---	3206-7 AOX			

★ Indicates use as required.
⊟ Indicates parts not listed in any previous parts book.
April 1966, Supersedes May 1965.

MyMopar.com

Printed in U.S.A.
Prices and specifications subject to change without notice.
Right and left part numbers are on same line, first number is right, second number is left.
* Indicates change or addition.

CODE	REMARKS	PER CAR	SED.	4D H.T	STA. WGN.	2D H.T	CV. CP.
23-92-5	PANEL, Door Trim - Cont'd						
	C3-H (6 window sedan)						
	(less elec. window regulator)						
	(codes H1B, H4B)						
	Front	1	3112-3 ABB	---- ---	3112-3 ABB		
	Rear	1	3208-9 ABB	---- ---	3208-9 ABB		
	(code H1L)						
	Front	1	3112-3 AXY				
	Rear	1	3208-9 AXY				
	(code H1N)						
	Front	1	---- ---	---- ---	3112-3 AXW		
	Rear	1	---- ---	---- ---	3208-9 AXW		
	(code H1Q)						
	Front	1	3112-3 AQQ				
	Rear	1	3208-9 AQQ				
	(codes H1R, H4R)						
	Front	1	3112-3 ARR	---- ---	3112-3 ARR		
	Rear	1	3208-9 ARR	---- ---	3208-9 ARR		
	(codes H1T, H4T)						
	Front	1	3112-3 ATT	---- ---	3112-3 ATT		
	Rear	1	3208-9 ATT	---- ---	3208-9 ATT		
	(code H4X)						
	Front	1	---- ---	---- ---	3112-3 AXX		
	Rear	1	---- ---	---- ---	3208-9 AXX		
	(w/elec. window regulator)						
	(codes H1B, H4B)						
	Front	1	3124-5 ABB	---- ---	3124-5 ABB		
	Rear	1	3220-1 ABB	---- ---	3220-1 ABB		
	(code H1L)						
	Front	1	3124-5 AXY				
	Rear	1	3220-1 AXY				
	(code H1N)						
	Front	1	--- ---	---- ---	3124-5 AXW		
	Rear	1	---- ---	---- ---	3220-1 AXW		
	(code H1Q)						
	Front	1	3124-5 AQQ				
	Rear	1	3220-1 AQQ				
	(codes H1R, H4R)						
	Front	1	3124-5 ARR	---- ---	3124-5 ARR		
	Rear	1	3220-1 ARR	---- ---	3220-1 ARR		
	(codes H1T, H4T)						
	Front	1	3124-5 ATT	---- ---	3124-5 ATT		
	Rear	1	3220-1 ATT	---- ---	3220-1 ATT		
	(code H4X)						
	Front	1	---- ---	---- ---	3124-5 AXX		
	Rear	1	---- ---	---- ---	3220-1 AXX		
	(codes H1B, H4B)						
	Front	1	---- ---	3126-7 ABB			
	Rear	1	---- ---	3222-3 ABB			
	(codes H1L, H4L)						
	Front	1	---- ---	3126-7 AXY			
	Rear	1	---- ---	3222-3 AXY			
	(code H1N)						
	Front	1	---- ---	3126-7 AXW			
	Rear	1	---- ---	3222-3 AXW			
	(code H1Q)						
	Front	1	---- ---	3126-7 AQQ			
	Rear	1	---- ---	3222-3 AQQ			

★ Indicates use as required.
B Indicates parts not listed in any previous parts book.
Right and left part numbers are on same line, first number is right, second number is left.
* Indicates change or addition.

Printed in U.S.A.
Prices and specifications subject to change without notice.
May 1965, Supersedes Sept. 4, 1964.

MyMopar.com

CODE	REMARKS	PER CAR	SED.	4D H.T	STA. WGN.	2D H.T	CV. CP.
23-92-5	PANEL, Door Trim - Cont'd						
	C3-H (w/elec. window regulator)						
	(codes H1R, H4R)						
	Front	1	---- ---	3126-7 ARR			
	Rear	1	---- ---	3222-3 ARR			
	(code H1T)						
	Front	1	---- ---	3126-7 ATT			
	Rear	1	---- ---	3222-3 ATT			
	(code H4X)						
	Front	1	---- ---	3126-7 AXX			
	Rear	1	---- ---	3222-3 AXX			
	(less elec. window regulator)						
	(codes H1B, H4B)						
	Front	1	---- ---	3114-5 ABB			
	Rear	1	---- ---	3210-1 ABB			
	(codes H1L, H4L)						
	Front	1	---- ---	3114-5 AXY			
	Rear	1	---- ---	3210-1 AXY			
	(code H1N)						
	Front	1	---- ---	3114-5 AXW			
	Rear	1	---- ---	3210-1 AXW			
	(code H1Q)						
	Front	1	---- ---	3114-5 AQQ			
	Rear	1	---- ---	3210-1 AQQ			
	(codes H1R, H4R)						
	Front	1	---- ---	3114-5 ARR			
	Rear	1	---- ---	3210-1 ARR			
	(code H1T)						
	Front	1	---- ---	3114-5 ATT			
	Rear	1	---- ---	3210-1 ATT			
	(code H4X)						
	Front	1	---- ---	3114-5 AXX			
	Rear	1	---- ---	3210-1 AXX			
	C1-L						
	(code L4B)						
	Front	1	---- ---	---- ---	3128-9 ABB		
	Rear	1	---- ---	---- ---	3204-5 ABB		
	(code L4R)						
	Front	1	---- ---	---- ---	3128-9 ARR		
	Rear	1	---- ---	---- ---	3204-5 ARR		
	(code L4T)						
	Front	1	---- ---	---- ---	3128-9 ATT		
	Rear	1	---- ---	---- ---	3204-5 ATT		
	(code L4X)						
	Front	1	---- ---	---- ---	⊟3128-9 AOX		
	Rear	1	---- ---	---- ---	⊟3204-5 AOX		
	C1-L						
	(codes L4B, L8B, L9B)	1	---- ---	---- ---	---- ---	3104-5 ABB	3104-5 ABB
	(code L4L)	1	---- ---	---- ---	---- ---	3104-5 AXY	3104-5 AXY
	(code L4W	1	---- ---	---- ---	---- ---	3104-5 AXW	3104-5 AXW
	(codes L4R, L8R, L9R)	1	---- ---	---- ---	---- ---	3104-5 ARR	3104-5 ARR
	(code L8Q)	1	---- ---	---- ---	---- ---	3104-5 AQQ	3104-5 AQQ
	(codes L4T, L8T)	1	---- ---	---- ---	---- ---	3104-5 ATT	3104-5 ATT
	(codes L4X, L9X)	1	---- ---	---- ---	---- ---	---- ---	3104-5 AOX
	(code L4N)	1	---- ---	---- ---	---- ---	*3104-5 AXW	
	C2-M, C2-P						
	(codes M4B, P4B)	1	---- ---	---- ---	---- ---	3108-9 ABB	3108-9 ABB
	(codes M3R, M4R, P3R, P4R)	1	---- ---	---- ---	---- ---	3108-9 ARR	3108-9 ARR
	(codes M4T, P4T)	1	---- ---	---- ---	---- ---	3108-9 ATT	3108-9 ATT
	(codes M3X, M4X, P3X, P4X)	1	---- ---	---- ---	---- ---	3108-9 AOX	3108-9 AOX
	(codes M4L, P4L)	1	---- ---	---- ---	---- ---	3108-9 AXY	3108-9 AXY
	(codes M4W, P4W)	1	---- ---	---- ---	---- ---	3108-9 AOW	3108-9 AOW

★ Indicates use as required.
⊟ Indicates parts not listed in any previous parts book.
May 1965, Supersedes Sept. 4, 1964.

MyMopar.com

Prices and specifications subject to change without notice.
Right and left part numbers are on same line, first number is right, second number is left.
* Indicates change or addition

Printed in U.S.A.

CODE	REMARKS	PER CAR	SED.	4D H.T	STA. WGN.	2D H.T	CV. CP.
23-92-5	PANEL, Door Trim - Cont'd						
	C3-H						
	(w/elec. window regulator)						
	(codes H1B, H4B)	1	---- ---	---- ---	---- ---	3116-7ABB	
	(codes H1L, H4L)	1	---- ---	---- ---	---- ---	3116-7AXY	
	(code H1N	1	---- ---	---- ---	---- ---	3116-7AXW	
	(code H1Q)	1	---- ---	---- ---	---- ---	3116-7AQQ	
	(codes H1R, H4R)	1	---- ---	---- ---	---- ---	3116-7ARR	
	(code H1T)	1	---- ---	---- ---	---- ---	3116-7ATT	
	(code H4X)	1	---- ---	---- ---	---- ---	3116-7AXX	
	(less elec. window regulator)						
	(codes H1B, H4B)	1	---- ---	---- ---	---- ---	3122-3ABB	
	(codes H1L, H4L)	1	---- ---	---- ---	---- ---	3122-3AXY	
	(code H1N)	1	---- ---	---- ---	---- ---	3122-3AXW	
	(code H1Q)	1	---- ---	---- ---	---- ---	3122-3AQQ	
	(codes H1R, H4R)	1	---- ---	---- ---	---- ---	3122-3ARR	
	(code H1T)	1	---- ---	---- ---	---- ---	3122-3ATT	
	(code H4X)	1	---- ---	---- ---	---- ---	3122-3AXX	
	Y1-H						
	(codes H3B, H7B)						
	Front	1	---- ---	3466-7ABB			
	Rear	1	---- ---	3268-9ABB			
	(code H3C)						
	Front	1	---- ---	3466-7ABW			
	Rear	1	---- ---	3268-9ABW			
	(code H7G)						
	Front	1	---- ---	3466-7AOF			
	Rear	1	---- ---	3268-9AOF			
	(codes H3R, H8R)						
	Front	1	---- ---	3466-7AOR			
	Rear	1	---- ---	3268-9AOR			
	(code H7T)						
	Front	1	---- ---	3466-7ALL			
	Rear	1	---- ---	3268-9ALL			
	(code H3V)						
	Front	1	---- ---	3466-7ARW			
	Rear	1	---- ---	3268-9ARW			
	(codes H3W, H8W)						
	Front	1	---- ---	3466-7AXW			
	Rear	1	---- ---	3268-9AXW			
	(codes H3X, H8X)						
	Front	1	---- ---	3466-7AOX			
	Rear	1	---- ---	3268-9AOX			
	(codes H6A, H7A)						
	Front	1	---- ---	*3466-7AAX			
	Rear	1	---- ---	*3268-9AAX			
	Screw (attaching, thru arm rest)						
	Y1-M						
	(codes M3B, M7B)						
	Front	1	---- ---	3462-3ABB			
	Rear	1	---- ---	3266-7ABB			
	(code M3C)						
	Front	1	---- ---	3462-3ABW			
	Rear	1	---- ---	3266-7ABW			
	(code M7G)						
	Front	1	---- ---	3462-3AOF			
	Rear	1	---- ---	3266-7AOF			
	(code M3K)						
	Front	1	---- ---	3462-3AOM			
	Rear	1	---- ---	3266-7AOM			

★ Indicates use as required.
⊟ Indicates parts not listed in any previous parts book.
Right and left part numbers are on same line, first number is right, second number is left.
* Indicates change or addition.

MyMopar.com

Printed in U.S.A.
Prices and specifications subject to change without notice.
April 1966, Supersedes May 1965.

CODE	REMARKS	PER CAR	SED.	4D H.T	STA. WGN.	2D H.T	CV. CP.
23-92-5	PANEL, Door Trim - Cont'd						
	Y1-M						
	(codes M3W, M5W, M7N)						
	Front	1	---- ---	3462-3 AXW			
	Rear	1	---- ---	3266-7 AXW			
	(code M7Q)						
	Front	1	---- ---	3462-3 AQQ			
	Rear	1	---- ---	3266-7 AQQ			
	(codes M3R, M5R, M7R)						
	Front	1	---- ---	3462-3 AOR			
	Rear	1	---- ---	3266-7 AOR			
	(codes M3T, M7T)						
	Front	1	---- ---	3462-3 ALL			
	Rear	1	---- ---	3266-7 ALL			
	(code M3V)						
	Front	1	---- ---	3462-3 ARW			
	Rear	1	---- ---	3266-7 ARW			
	(codes M3X, M5X, M7P)						
	Front	1	---- ---	3462-3 AOX			
	Rear	1	---- ---	3266-7 AOX			
	(codes M8B, M9B)	1	---- ---	---- ---	---- ---	3464-5 AOB	3464-5 AOB
	(codes M8N, M9C, M9V, M9W)	1	---- ---	---- ---	---- ---	3464-5 AOW	3464-5 AOW
	(code M9K)	1	---- ---	---- ---	---- ---	3464-5 AOM	3464-5 AOM
	(code M9R)	1	---- ---	---- ---	---- ---	3464-5 AOR	3464-5 AOR
	(codes M8G, M9G)	1	---- ---	---- ---	---- ---	*3464-5 AOF	*3464-5 AOF
	(code M9T)	1	---- ---	---- ---	---- ---	3464-5 AOL	3464-5 AOL
	(code M9X)	1	---- ---	---- ---	---- ---	3464-5 AOX	3464-5 AOX
	Fastener	★	6000 365	6000 365	6000 365	6000 365	6000 365
	Nut (attaching)	4	---- ---	445 160	---- ---	445 160	445 160
23-96-3	PANEL, Luggage Compartment Front Lining						
	C1, C2, C3	1	2572 054	2572 054	---- ---	2572 054	2581 902
	(w/shroud)	1	---- ---	---- ---	---- ---	2581 738	---- ---
	Fasteners	2	---- ---	6001 425	---- ---	6001 425	
	Y1 (w/silencer)	1	---- ---	2490 440	---- ---	2490 440	
	(black)	1	---- ---	---- ---	---- ---	---- ---	2499 059
23-96-8	PANEL, Luggage Compartment Side Lining						
	C1-L, C2-M, C3-H	1	*2589 778-9	*2589 778-9	---- ---	*2589 778-9	2581 900-1
	(wheelhouse and hinge cover)	1	2572 058-9	2572 058-9	---- ---	2572 058-9	
	(wheelhouse and lower quarter trim)						
	(codes L4B, H4B)	1	---- ---	---- ---	2026-7 AB4		
	(codes L4R, H4R)	1	---- ---	---- ---	2026-7 AR7		
	(codes L4T, H4T)	1	---- ---	---- ---	2026-7 AT6		
	(code H1N)	1	---- ---	---- ---	3528-9 AW3		
	(codes L4X, H4X)	1	---- ---	---- ---	2026-7 AX9		
	(wheelhouse carpet and plate)						
	(code H4B)	1	---- ---	---- ---	3526-7 AB8		
	(code H4R)	1	---- ---	---- ---	3526-7 AR8		
	(code H4T)	1	---- ---	---- ---	3526-7 AT8		
	(codes H1N, H4X)	1	---- ---	---- ---	3526-7 AX8		
	(w/air conditioning)						
	(wheelhouse and lower quarter trim panel cover) (left side only)						
	C1-L						
	(code L4B)	1	---- ---	---- ---	3531 AB4		
	(code L4R)	1	---- ---	---- ---	3531 AR7		
	(code L4T)	1	---- ---	---- ---	3531 AT6		
	(code L4X)	1	---- ---	---- ---	3531 AX9		

● Indicates use as required.
⊟ Indicates parts not listed in any previous parts book.
April 1966, Supersedes May 1965.

Printed in U.S.A.
Prices and specifications subject to change without notice.
Right and left part numbers are on same line, first number is right, second number is left.
* Indicates change or addition.

MyMopar.com

CODE	REMARKS	PER CAR	SED.	4D H.T	STA. WGN.	2D H.T	CV. CP.
23-96-8	PANEL, Luggage Compartment Side Lining - Cont'd						
	C3-H						
	(codes H1B, H4B)	1	---- ---	---- ---	3532 AB4		
	(code H1N)	1	---- ---	---- ---	3532 AW3		
	(code H4R)	1	---- ---	---- ---	3532 AR7		
	(code H4T)	1	---- ---	---- ---	3532 AT6		
	(code H4X)	1	---- ---	---- ---	3532 AX9		
	Screw	14	---- ---	---- ---	*6026 221		
	Y1-M (lower) (front)	1	---- ---	2581 558-9	---- ---	2581 558-9	2581 556-7
	(side)	1	---- ---	2581 490-1	---- ---	2581 490-1	2581 490-1
	Fastener	1	---- ---	6000 903	---- ---	6000 903	6000 903
23-96-10	PANEL, Luggage Compartment Deck Opening Lower						
	Y1 Rt.	1	---- ---	*7666 VX9	---- ---	*7666 VX9	*7666 VX9
	Lt.	1	---- ---	*7667 BX9	---- ---	*7667 BX9	*7667 BX9
23-99-4	COVER, Center Pillar Trim						
	Y1 (paint as required)	1	---- ---	2808-9 VT4			
23-99-17	RETAINER, Tailgate Opening Pillar Cover Upper						
	C1, C3	2	---- ---	---- ---	2656 924		
23-99-41	COVER, Tailgate Opening Pillar						
	C1, C3 (paint as required) (upper)	1	---- ---	---- ---	2810-1 AT6		
	(lower right)	1	---- ---	---- ---	2812 AT6		
23-101-3	PANEL, Rear Quarter Trim						
	C1, C3 (6 window sedan)						
	(codes L2B, L5B)	1	2070-1 AB8				
	(code H1B)	1	2070-1 AB4				
	(codes L2L, H1L)	1	2070-1 AY3				
	(codes L2N, H1N)	1	2070-1 AW3				
	(code L2Q)	1	2070-1 AQ8				
	(code H1Q)	1	2070-1 AQ4				
	(codes L5R, L2R, H1R)	1	2070-1 AR7				
	(code H1T)	1	2070-1 AT6				
	(codes L2T, L5T)	1	2070-1 AT8				
	C1-L						
	(codes L1B, L5B)	1	2068-9 AB8				
	(code L1N)	1	2068-9 AW3				
	(code L1Q)	1	2068-9 AQ8				
	(codes L1R, L5R)	1	2068-9 AR7				
	(codes L1T, L5T)	1	2068-9 AT8				
	C1, C3						
	(codes L4B, L8B, H1B)	1	---- ---	2072-3 AB4			
	(codes L4L, H1L)	1	---- ---	2072-3 AY3			
	(codes L4N, H1N)	1	---- ---	2072-3 AW3			
	(codes L8Q, H1Q)	1	---- ---	2072-3 AQ4			
	(codes L4R, L8R, H1R)	1	---- ---	2072-3 AR7			
	(codes L8T, H1T)	1	---- ---	2072-3 AT6			
	C2-M, C3-H						
	(code M4B)	1	---- ---	2074-5 AB8			
	(code H4B)	1	---- ---	2074-5 AB4			
	(code H4L)	1	---- ---	2074-5 AY3			
	(code M4W)	1	---- ---	2074-5 AW3			
	(code H4R)	1	---- ---	2074-5 AR7			
	(codes M1N, M4X, H4X)	1	---- ---	2074-5 AX9			
	(code M4R)	1	---- ---	*2074-5 AR8			
	(code M4T)	1	---- ---	*2074-5 AT8			
	Screw and Washer (attaching)	2	6023 381	6023 381			

★ Indicates use as required.
B Indicates parts not listed in any previous parts book.
Right and left part numbers are on same line, first number is right, second number is left.
* Indicates change or addition.

Printed in U.S.A.
Prices and specifications subject to change without notice.

MyMopar.com

CODE	REMARKS	PER CAR	SED.	4D H.T	STA. WGN.	2D H.T	CV. CP.
23-101-3	PANEL, Rear Quarter Trim - Cont'd						
	C1-L						
	(codes L4B, L8B, L9B)	1	---- ---	---- ---	---- ---	3300-1 ABB	
	(code L4L)	1	---- ---	---- ---	---- ---	3300-1 AXY	
	(code L4N)	1	---- ---	---- ---	---- ---	3300-1 AXW	
	(codes L4R, L8R, L9R)	1	---- ---	---- ---	---- ---	3300-1 ARR	
	(code L8Q)	1	---- ---	---- ---	---- ---	3300-1 AQQ	
	(code L8T)	1	---- ---	---- ---	---- ---	3300-1 ATT	
	(code L9X)	1	---- ---	---- ---	---- ---	3300-1 AOX	
	C2						
	(codes M4B, P4B)	1	---- ---	---- ---	---- ---	3304-5 ABB	
	(codes M3R, M4R, P3R, P4R)	1	---- ---	---- ---	---- ---	3304-5 ARR	
	(codes M4T, P4T)	1	---- ---	---- ---	---- ---	3304-5 ATT	
	(codes M4W, P4W)	1	---- ---	---- ---	---- ---	3304-5 AOW	
	(codes M3X, M4X, P3X, P4X)	1	---- ---	---- ---	---- ---	3304-5 AOX	
	(codes M4L, P4L)	1	---- ---	---- ---	---- ---	3304-5 AXY	
	C3-H (w/o elec. window regulator)						
	(code H1B)	1	---- ---	---- ---	---- ---	3318-9 ABB	
	(code H1L)	1	---- ---	---- ---	---- ---	3318-9 AXY	
	(code H1N)	1	---- ---	---- ---	---- ---	3318-9 AXW	
	(code H1Q)	1	---- ---	---- ---	---- ---	3318-9 AQQ	
	(code H1R)	1	---- ---	---- ---	---- ---	3318-9 ARR	
	(code H1T)	1	---- ---	---- ---	---- ---	3318-9 ATT	
	(code H4B)	1	---- ---	---- ---	---- ---	*3378-9 ABB	
	(code H4L)	1	---- ---	---- ---	---- ---	*3378-9 AXY	
	(code H4R)	1	---- ---	---- ---	---- ---	*3378-9 ARR	
	(code H4X)	1	---- ---	---- ---	---- ---	*3378-9 AXX	
	(w/window regulator)						
	(codes H1B)	1	---- ---	---- ---	---- ---	3316-7 ABB	
	(code H1L)	1	---- ---	---- ---	---- ---	*3316-7 AXY	
	(code H1N)	1	---- ---	---- ---	---- ---	3316-7 AXW	
	(code H1Q)	1	---- ---	---- ---	---- ---	3316-7 AQQ	
	(code H1R)	1	---- ---	---- ---	---- ---	3316-7 ARR	
	(code H1T)	1	---- ---	---- ---	---- ---	3316-7 ATT	
	(code H4B)	1	---- ---	---- ---	---- ---	3382-3 ABB	
	(code H4L)	1	---- ---	---- ---	---- ---	3382-3 AXY	
	(code H4R)	1	---- ---	---- ---	---- ---	3382-3 ARR	
	(code H4X)	1	---- ---	---- ---	---- ---	3382-3 AXX	
	C1-L						
	(code L4B)	1	---- ---	---- ---	---- ---	---- ---	3302-3 ABB
	(code L4L)	1	---- ---	---- ---	---- ---	---- ---	3302-3 AXY
	(code L4R)	1	---- ---	---- ---	---- ---	--- ---	3302-3 ARR
	(code L4T)	1	---- ---	---- ---	---- ---	---- ---	3302-3 ATT
	(code L4X)	1	---- ---	---- ---	---- ---	---- ---	3302-3 AOX
	C2						
	(codes M4B, P4B)	1	---- ---	---- ---	---- ---	---- ---	3306-7 ABB
	(codes M3R, M4R, P3R, P4R)	1	---- ---	---- ---	---- ---	---- ---	3306-7 ARR
	(codes M4T, P4T	1	---- ---	---- ---	---- ---	---- ---	3306-7 ATT
	(codes M4W, P4W)	1	---- ---	---- ---	---- ---	---- ---	3306-7 AOW
	(codes M3X, M4X, P3X, P4X)	1	---- ---	---- ---	---- ---	---- ---	3306-7 AOX
	(codes M4L, P4L)	1	---- ---	---- ---	---- ---	---- ---	3306-7 AXY
	Y1-H (lower)						
	(codes M3B, M7B, H3B, H7B)	1	---- ---	⊟7676-7 AB4			
	(codes H6A, H7A)	1	---- ---	⊟7676-7 AA3			
	(codes M7G, H7G)	1	---- ---	⊟7676-7 AF9			
	(codes M3T, M7T, H7T)	1	---- ---	⊟7676-7 AL3			
	(codes M3C, M3V, M3W, M5W, H3C, H3V, H3W, M7N, H8W)	1	---- ---	7676-7 AW3			

● Indicates use as required.
⊟ Indicates parts not listed in any previous parts book.
May 1965, Supersedes Sept. 4, 1964.

Printed in U.S.A.
Prices and specifications subject to change without notice.
Right and left part numbers are on same line, first number is right, second number is left.
* Indicates change or addition.

MyMopar.com

CODE	REMARKS	PER CAR	SED.	4D H.T	STA. WGN.	2D H.T	CV. CP.
23-101-3	PANEL, Rear Quarter Trim - Cont'd						
	Y1-H (lower)						
	(codes M3R, M5R, M7R, H3R, H8R)	1	---- ---	7676-7 AR5			
	(codes M3X, M5X, M7P, H3X, H8X)	1	---- ---	7676-7 AX9			
	(code M7Q)	1	---- ---	7676-7 AQ4			
	(code M3K)	1	---- ---	7676-7 AM9			
	Y1-M						
	(codes M8B, M9B)	1	---- ---	---- ---	---- ---	3372-3 AOB	3374-5 AOB
	(codes M8N, M9C, M9V, M9W)	1	---- ---	---- ---	---- ---	3372-3 AOW	3374-5 AOW
	(codes M8G, M9G)	1	---- ---	---- ---	---- ---	3372-3 AOF	
	(code M9K)	1	---- ---	---- ---	---- ---	3372-3 AOM	3374-5 AOM
	(code M9R)	1	---- ---	---- ---	---- ---	3372-3 AOR	3374-5 AOR
	(code M9T)	1	---- ---	---- ---	---- ---	3372-3 AOL	3374-5 AOL
	(code M9X)	1	---- ---	---- ---	---- ---	3372-3 AOX	3374-5 AOX
	Fastener	★	6000 365	6000 365	---- ---	6000 365	6000 365
	Screw and Washer	2	---- ---	---- ---	---- ---	---- ---	6023 381
23-101-14	COVER, Rear Quarter Trim Lower Outer						
	Y1						
	(codes M3B, M7B, H3B, H7B)	1	---- ---	2046-7 AB4			
	(code M7Q)	1	---- ---	2046-7 AQ4			
	(code M3K)	1	---- ---	2046-7 AM9			
	(codes M3R, M5R, M7R, H3R, H8R)	1	---- ---	2046-7 AR5			
	(codes M3T, M7T, H7T)	1	---- ---	2046-7 AL3			
	(codes H6A, H7A)	1	---- ---	2046-7 AA3			
	(codes M3C, M3V, M3W, M5W, M7N, H3C, H3V, H3W, H8W)	1	---- ---	2046-7 VW3			
	(codes M7G, H7G)	1	---- ---	2046-7 VF9			
	(codes M3X, M5X, M7P, H3X, H8X)	1	---- ---	2046-7 VX9			
	Screw (attaching)	★	---- ---	6023 247			
23-101-38	PANEL, Rear Quarter Side Filler						
	(code M9B)	1	---- ---	---- ---	---- ---	---- ---	4806-7 AB4
	(codes M9C, M9V, M9W)	1	---- ---	---- ---	---- ---	---- ---	4806-7 AW3
	(code M9K)	1	---- ---	---- ---	---- ---	---- ---	4806-7 AM9
	(code M9R)	1	---- ---	---- ---	---- ---	---- ---	4806-7 AR5
	(code M9T)	1	---- ---	---- ---	---- ---	---- ---	4806-7 AL3
	(code M9X)	1	---- ---	---- ---	---- ---	---- ---	4806-7 AX9
23-101-39	COVER, Rear Quarter Side Filler Panel						
	Y1-M						
	(codes M8B, M9B, M9C)	1	---- ---	---- ---	---- ---	4978-9 AB4	
	(code M8G)	1	---- ---	---- ---	---- ---	4978-9 AF9	
	(codes M8N, M9W, M9X)	1	---- ---	---- ---	---- ---	4978-9 AX9	
	(code M9K)	1	---- ---	---- ---	---- ---	4978-9 AM9	
	(codes M9R, M9V)	1	---- ---	---- ---	---- ---	4978-9 AR5	
	(code M9T)	1	---- ---	---- ---	---- ---	4978-9 AL3	
23-102-3	PANEL, Shelf Trim (except 6 window)						
	C1-L (paint as required)	1	*1313 AT6	*1300 AT6	---- ---	*1312 AT6	
	(6 window)						
	C3-H (paint as required)	1	*1302 AT6	*1300 AT6	---- ---	*1312 AT6	
	Y1						
	(codes M3B, M3C, M7B)	1	---- ---	1309 AB4			
	(code M3K)	1	---- ---	1309 AM9			
	(code M7Q)	1	---- ---	1309 AQ4			
	(codes M3R, M5R, M3V)	1	---- ---	1309 AR5			
	(codes M3T, M7T)	1	---- ---	1308 AL3			

★ Indicates use as required.
⊟ Indicates parts not listed in any previous parts book.
Right and left part numbers are on same line, first number is right, second number is left.
• Indicates change or addition.

Printed in U.S.A.
Prices and specifications subject to change without notice.
April 1966, Supersedes May 1965.

MyMopar.com

CODE	REMARKS	PER CAR	SED.	4D H.T	STA. WGN.	2D H.T	CV. CP.
23-102-3	PANEL, Shelf Trim - Cont'd						
	Y1						
	(codes M8B, M9B, H3B, H7B)	1	---- ---	1308 AB4	---- ---	1308 AB4	
	(codes M8G, H7G)	1	---- ---	1308 VF9	---- ---	1308 VF9	
	(code M9K)	1	---- ---	1308 AM9			
	(codes M8N, M9W, M9X, H3W, H3X, H6A, H7A, H8W, H8X)	1	---- ---	1308 VX8	---- ---	1308 VX8	
	(codes M9R, M9V, H3R, H3V, H8R)	1	---- ---	1308 AR5	---- ---	1308 AR5	
	(codes M8G, H7G)	1	---- ---	*1308 VF9	---- ---	*1308 VF9	
	(codes M3W, M3X, M5X, M7N, M7P, M5W)	1	---- ---	1309 VX8			
	(code M7G)	1	---- ---	1309 VF9			
	Fastener	4	*6000 903	6000 903	---- ---	6000 903	
23-103-3	PANEL, Visor Trim						
	C1, C2						
	(linen grain w/o dual air cond.)						
	(codes L1B, L4B, L8B, L9B, M4B, P4B)	2	*1116 AB3	*1116 AB3	---- ---	*1116 AB3	
	(code L4B)	2	---- ---	---- ---	---- ---	---- ---	1199 AB4
	(codes M4B, P4B)	2	---- ---	---- ---	---- ---	---- ---	1199 AB8
	(codes L1N, L1R, L4L, L4N, L4R, L8R, L9R, M1N, M3R, M3X, P3R, P3X, M4R, M4W, M4X, P4R, P4W, P4X)	2	*1116 AW2	1116 AW2	---- ---	*1116 AW2	
	(codes L4L, M4L, P4L)	2	---- ---	---- ---	---- ---	---- ---	1199 AY3
	(codes L1Q, L8Q)	2	1116 AQ3	1116 AQ3	---- ---	1116 AQ3	
	(codes L4T, M4T, P4T)	2	---- ---	---- ---	---- ---	---- ---	1199 AT6
	(codes L1T, L8T, M4T, P4T)	2	1116 AT3	1116 AT3	---- ---	1116 AT3	
	(codes M4L, P4L)	2	---- ---	---- ---	---- ---	1116 AY3	
	(codes M4W, P4W)	2	---- ---	---- ---	---- ---	---- ---	1199 AW3
	(code L4R)	2	---- ---	---- ---	---- ---	---- ---	1199 AR7
	(codes M3R, P3R, M4R, P4R)	2	---- ---	---- ---	---- ---	---- ---	1199 AR8
	(codes L4X, L9X, M3X, P3X, M4X, P4X)	2	---- ---	⊟1116 AX9	---- ---	⊟1116 AX9	*1199 AX9
	C3-H (w/o dual air cond.)						
	(codes H1B, H4B)	2	---- ---	*1116 AB3	---- ---	*1116 AB3	
	(codes H1R, H1N, H4R)	2	---- ---	*1116 AW2	---- ---	*1116 AW2	
	(code H1Q)	2	---- ---	*1116 AQ3	---- ---	*1116 AQ3	
	(code H1T)	2	---- ---	*1116 AT3	---- ---	*1116 AT3	
	(codes H1L, H4L)	2	---- ---	*1116 AY3	---- ---	*1116 AY3	
	(code H4X)	2	---- ---	⊟1116 AX9	---- ---	⊟1116 AX9	
	C1, C3						
	(vinyl covered non-perforated)						
	(codes L2B, L5B, H1B)	2	*1104 AB3				
	(codes L2L, H1L)	2	*1104 AY3				
	(codes L2N, H1N, L2R, L5R, H1R)	2	*1104 AW2				
	(codes L2Q, H1Q)	2	*1104 AQ3				
	(codes L2T, L5T, H1T)	2	*1104 AT3				
	(linen grain w/o dual air cond.)						
	(codes L2B, L5B, H1B)	2	*1116 AB3				
	(codes L2L, H1L)	2	*1116 AY3				
	(codes L2N, H1N, L2R, L5R, H1R)	2	*1116 AW2				
	(codes L2Q, H1Q)	2	*1116 AQ3				
	(codes L2T, L5T, H1T)	2	*1116 AT3				
	(perf. hardboard w/o dual air cond.) (w/imit. leather binding)						
	(codes L4B, H4B)	2	---- ---	---- ---	*1111 AB3		

★ Indicates use as required.
⊟ Indicates parts not listed in any previous parts book.
May 1965. Supersedes Sept. 4, 1964.

Printed in U.S.A.
Prices and specifications subject to change without notice.
Right and left part numbers are on same line, first number is right, second number is left.
* Indicates change or addition.

MyMopar.com

CODE	REMARKS	PER CAR	SED.	4D H.T	STA. WGN.	2D H.T	CV. CP.
23-103-3	PANEL, Visor Trim - Cont'd						
	C1, C3 (perf. hardboard w/o dual air cond.) (w/imitation leather binding)						
	(codes L4R, L4X, H4R, H4X, H1N)	2	---- ---	---- ---	1111 AW2		
	(codes L4T, H4T)	2	---- ---	---- ---	1111 AT3		
	C1, C3 (perf. hard board w/o dual air cond.) (w/extruded vinyl binding)						
	(codes L4B, H4B)	2	---- ---	---- ---	*1111 AB3		
	(codes L4R, H1R, H4R, H1N, L4X, H4X)	2	---- ---	---- ---	*1111 AR7		
	(codes L4T, H4T)	2	---- ---	---- ---	*1111 AT3		
	(w/dual air cond.)	2	---- ---	---- ---	1112 AW2		
	C3-H (suede coated foam)						
	(codes H1B, H4B)	1	---- ---	1121 AB4	---- ---	1121 AB4	
	(codes H1L, H4L)	1	---- ---	1121 ATY	---- ---	1121 ATY	
	(codes H1N, H1R, H4R)	1	---- ---	1121 AWW	---- ---	1121 AWW	
	(code H1Q)	1	---- ---	1121 AQ4	---- ---	1121 AQ4	
	(code H1T)	1	---- ---	1121 AT6	---- ---	1121 AT6	
	(code H4X)	1	---- ---	1121 AAX	---- ---	1121 AAX	
	Y1-M (vinyl coated foam)						
	(codes M3B, M7B)	1	---- ---	4176-7 AB3			
	(codes M3C, M3V, M3W, M3R, M5R, M5W, M7R, M7N)	1		4176-7 AW2			
	(code M7P)	1	---- ---	4176-7 AA2			
	(code M7Q)	1	---- ---	4176-7 AQ3			
	(code M3K)	1	---- ---	4176-7 AM2			
	(codes M3X, M5X)	1	---- ---	4176-7 AX9			
	(codes M3T, M7T, M7G)	1	---- ---	4176-7 AL3			
	Y1-M (w/o mirror)						
	(code M9B)	1	---- ---	---- ---	---- ---	---- ---	1122-3 AB4
	(codes M9C, M9V, M9W)	1	---- ---	---- ---	---- ---	---- ---	1122-3 AW3
	(code M9K)	1	---- ---	---- ---	---- ---	---- ---	1122-3 AM9
	(code M9T)	1	---- ---	---- ---	---- ---	---- ---	1122-3 AL3
	(code M9R)	1	---- ---	---- ---	---- ---	---- ---	1122-3 AR5
	(code M9X)	1	---- ---	---- ---	---- ---	---- ---	1122-3 AX9
	Y1 (suede coated foam)						
	(codes M8B, M9B, H3B, H7B)	1	---- ---	1160-1 AB4	---- ---	1160-1 AB4	
	(codes M8G, H7G)	1	---- ---	1160-1 ALF	---- ---	1160-1 ALF	
	(codes M8N, M9C, M9V, M9W, H3C, H3V, H3W, H8W)	1	---- ---	1160-1 AWW	---- ---	1160-1 AWW	
	(code M9K)	1	---- ---	---- ---	---- ---	1160-1 AMM	
	(codes M9R, H3R, H8R)	1	---- ---	1160-1 AWR	---- ---	1160-1 AWR	
	(codes M9T, H7T)	1	---- ---	1160-1 ATL	---- ---	1160-1 ATL	
	(codes M9X, H3X, H8X)	1	---- ---	1160-1 AAX	---- ---	1160-1 AAX	
	(codes H6A, H7A)	1	---- ---	1160-1 AAA	---- ---	1160-1 AAA	
	(vinyl coated foam)						
	(codes M8B, M9B, H3B, H7B)	1	---- ---	4176-7 AB3	---- ---	4176-7 AB3	
	(codes M7G, M8G)	1	---- ---	4176-7 AL3	---- ---	4176-7 AL3	
	(codes M8N, M9C, M9V, M9W, H3C, H3V, H3W, H8W, M9R, H3R, H8R)	1	---- ---	4176-7 AW2	---- ---	4176-7 AW2	
	(code M9K)	1	---- ---	4176-7 AM2	---- ---	4176-7 AM2	
	(codes M9T, H7T)	1	---- ---	4176-7 AL3	---- ---	4176-7 AL3	
	(codes M9X, H3X, H8X, H6A, H7A)	1	---- ---	4176-7 AA2	---- ---	4176-7 AA2	

★ Indicates use as required.
⊟ Indicates parts not listed in any previous parts book.
Right and left part numbers are on same line, first number is right, second number is left.
* Indicates change or addition.

MyMopar.com

Printed in U.S.A.
Prices and specifications subject to change without notice.
April 1966, Supersedes May 1965.

CODE	REMARKS	PER CAR	SED.	4D H.T	STA. WGN.	2D H.T	CV. CP.
23-103-3	PANEL, Visor Trim - Cont'd						
	Y1-M (w/o mirror) (linen grain perforated) (use w/all black interior)						
	(codes M3X, M5X)	1	---- ---	⊟4158-9 AX9			
23-103-10	ARM and BRACKET, Visor						
	C1, C2, C3	1	2581 292-3	2581 292-3	2581 292-3	2581 292-3	
	Y1	1	---- ---	2085 242-3	---- ---	2085 242-3	2161 588-9
	Washer (bracket to base)	4	---- ---	---- ---	---- ---	---- ---	138 597
	Washer (tension spring)	2	6000 106	6000 106	6000 106	6000 106	6000 106
23-103-34	HOOK and SPRING, Visor Support						
	Y1	2	---- ---	1900 776	---- ---	1900 776	2161 810
23-103-48	SUPPORT, Visor Inner						
	Y1	2	---- ---	2161 687	---- ---	2161 687	2490 478
23-108-4	CUSHION, Front Seat						
	C1-L						
	(manual w/airfoam pad)						
	(code L1B)	1	7578 A1B				
	(code L1N)	1	7578 A1N				
	(code L1Q)	1	7578 A1Q				
	(code L1R)	1	7578 A1R				
	(code L1T)	1	7578 A1T				
	(elec. 6 way w/airfoam pad)						
	(code L1B)	1	7579 A1B				
	(code L1N)	1	7579 A1N				
	(code L1Q)	1	7579 A1Q				
	(code L1R)	1	7579 A1R				
	(code L1T)	1	7579 A1T				
	(manual w/o airfoam pad)						
	(code L1B)	1	7550 A1B				
	(code L1N)	1	7550 A1N				
	(code L1Q)	1	7550 A1Q				
	(code L1R)	1	7550 A1R				
	(code L1T)	1	7550 A1T				
	(elec. 6 way w/o airfoam pad)						
	(code L1B)	1	7551 A1B				
	(code L1N)	1	7551 A1N				
	(code L1Q)	1	7551 A1Q				
	(code L1R)	1	7551 A1R				
	(code L1T)	1	7551 A1T				
	C1-L (6 window sedan)						
	(manual adj. w/airfoam pad)						
	(code L2B)	1	7566 A2B				
	(code L2L)	1	7566 A2L				
	(code L2N)	1	7566 A2N				
	(code L2Q)	1	7566 A2Q				
	(code L2R)	1	7566 A2R				
	(code L2T)	1	7566 A2T				
	(elec. 6 way w/airfoam pad)						
	(code L2B)	1	7567 A2B				
	(code L2L)	1	7567 A2L				
	(code L2N)	1	7567 A2N				
	(code L2Q)	1	7567 A2Q				
	(code L2R)	1	7567 A2R				
	(code L2T)	1	7567 A2T				

★ Indicates use as required.
⊟ Indicates parts not listed in any previous parts book.
May 1965, Supersedes Sept. 4, 1964.

Printed in U.S.A.
Prices and specifications subject to change without notice.
Right and left part numbers are on same line, first number is right, second number is left.
* Indicates change or addition.

MyMopar.com

CODE	REMARKS	PER CAR	SED.	4D H.T	STA. WGN.	2D H.T	CV. CP.
23-108-4	CUSHION, Front Seat - Cont'd						
	C1-L (6 window sedan)						
	(manual w/o airfoam pad)						
	(code L2B)	1	7564 A2B				
	(code L2L)	1	7564 A2L				
	(code L2N)	1	7564 A2N				
	(code L2Q)	1	7564 A2Q				
	(code L2R)	1	7564 A2R				
	(code L2T)	1	7564 A2T				
	(elec. 6 way w/o airfoam pad)						
	(code L2B)	1	7565 A2B				
	(code L2L)	1	7565 A2L				
	(code L2N)	1	7565 A2N				
	(code L2Q)	1	7565 A2Q				
	(code L2R)	1	7565 A2R				
	(code L2T)	1	7565 A2T				
	C1-L						
	(manual w/o airfoam pad)						
	(code L5B)	1	7571 A5B				
	(code L5R)	1	7571 A5R				
	(code L5T)	1	7571 A5T				
	(elec. 6 way w/o airfoam pad)						
	(code L5B)	1	7572 A5B				
	(code L5R)	1	7572 A5R				
	(code L5T)	1	7572 A5T				
	C3-H (6 window sedan)						
	(manual w/o airfoam pad)						
	(code H1B)	1	5469 A1B	5469 A1B			
	(code H1L)	1	5469 A1L	5469 A1L			
	(code H1N)	1	5469 A1N	5469 A1N	5469 A1N		
	(code H1Q)	1	5469 A1Q	5469 A1Q			
	(code H1R)	1	5469 A1R	5469 A1R			
	(code H1T)	1	5469 A1T	5469 A1T			
	(elec. 6 way w/o airfoam pad)						
	(code H1B)	1	5470 A1B	5470 A1B			
	(code H1L)	1	5470 A1L	5470 A1L			
	(code H1N)	1	5470 A1N	5470 A1N	5470 A1N		
	(code H1Q)	1	5470 A1Q	5470 A1Q			
	(code H1B)	1	5470 A1R	5470 A1R			
	(code H1T)	1	5470 A1T	5470 A1T			
	C1-L						
	(code L8B)	1	---- ---	7554 A8B			
	(code L8Q)	1	---- ---	7554 A8Q			
	(code L8R)	1	---- ---	7554 A8R			
	(code L8T)	1	---- ---	7554 A8T			
	(elec. window regulator)						
	(code L8B)	1	---- ---	7555 A8B			
	(code L8Q)	1	---- ---	7555 A8Q			
	(code L8R)	1	---- ---	7555 A8R			
	(code L8T)	1	---- ---	7555 A8T			
	(manual adj. w/airfoam pad)						
	(code L8B)	1	---- ---	7556 A8B			
	(code L8Q)	1	---- ---	7556 A8Q			
	(code L8R)	1	---- ---	7556 A8R			
	(code L8T)	1	---- ---	7556 A8T			
	(elec. 6 way w/airfoam pad)						
	(code L8B)	1	---- ---	7557 A8B			
	(code L8Q)	1	---- ---	7557 A8Q			
	(code L8R)	1	---- ---	7557 A8R			
	(code L8T)	1	---- ---	7557 A8T			

★ Indicates use as required.
⊟ Indicates parts not listed in any previous parts book.
Right and left part numbers are on same line, first number is right, second number is left.
* Indicates change or addition.

MyMopar.com

CODE	REMARKS	PER CAR	SED.	4D H.T	STA. WGN.	2D H.T	CV. CP.
23-108-4	CUSHION, Front Seat - Cont'd						
	C1-L						
	(manual w/o airfoam pad)						
	(code L4B)	1	---- ---	7558 A4B	7558 A4B		
	(code L4L)	1	---- ---	7558 A4L			
	(code L4N)	1	---- ---	7558 A4N			
	(code L4R)	1	---- ---	7558 A4R	7558 A4R		
	(code L4T)	1	---- ---	---- ---	7558 A4T		
	(code L4X)	1	---- ---	---- ---	7558 A4X		
	(elec. 6 way w/o airfoam pad)						
	(code L4B)	1	---- ---	5459 A4B	5459 A4B		
	(code L4L)	1	---- ---	5459 A4L			
	(code L4N)	1	---- ---	5459 A4N			
	(code L4R)	1	---- ---	5459 A4R	5459 A4R		
	(code L4T)	1	---- ---	---- --	5459 A4T		
	(code L4X)	1	---- ---	---- ---	5459 A4X		
	C3-H						
	(code H4B)	1	---- ---	5480-1 A4B	5480-1 A4B	5480-1 A4B	
	(code H4L)	1	---- ---	5480-1 A4L	---- ---	5480-1 A4L	
	(code H4B)	1	---- ---	5480-1 A4R	5480-1 A4R	5480-1 A4R	
	(code H4T)	1	---- ---	---- ---	5480-1 A4T		
	(code H4X)	1	---- ---	5480-1 A4X	5480-1 A4X	5480-1 A4X	
	(center cushion)						
	(code H4B)	1	---- ---	6947 AB4	6947 AB4	6947 AB4	
	(code H4L)	1	---- ---	6947 AY3	---- ---	6947 AY3	
	(code H4R)	1	---- ---	6947 AR7	6947 AR7	6947 AR7	
	(code H4T)	1	---- ---	---- ---	6947 AT6		
	(code H4X)	1	---- ---	6947 AX9	6947 AX9	6947 AX9	
	(4 way elec.)						
	(code H4B)	1	---- ---	⊟7630-1 A4B	⊟7630-1 A4B	⊟7630-1 A4B	
	(code H4L)	1	---- ---	⊟7630-1 A4L	---- ---	⊟7630-1 A4L	
	(code H4R)	1	---- ---	⊟7630-1 A4R	⊟7630-1 A4R	⊟7630-1 A4R	
	(code H4T)	1	---- ---	---- ---	⊟7630-1 A4T		
	(code H4X)	1	---- ---	⊟7630-1 A4X	⊟7630-1 A4X	⊟7630-1 A4X	
	Screw and Washer (center cushion to mounting bracket)	4	---- ---	180 079	180 079	180 079	
	C1-L						
	(code L9B)	2	---- ---	---- ---	---- ---	7597 A9B	
	(code L9R)	2	---- ---	---- ---	---- ---	7597 A9R	
	(code L9X)	2	---- ---	---- ---	---- ---	7597 A9X	
	(manual w/o airfoam pad)						
	(code L8B)	1	---- ---	---- ---	---- ---	5461 A8B	
	(code L8Q)	1	---- ---	---- ---	---- ---	5461 A8Q	
	(code L8R)	1	---- ---	---- ---	---- ---	5461 A8R	
	(code L8T)	1	---- ---	---- ---	---- ---	5461 A8T	
	(elec. 6 way w/o airfoam pad)						
	(code L8B)	1	---- ---	---- ---	---- ---	5462 A8B	
	(code L8Q)	1	---- ---	---- ---	---- ---	5462 A8Q	
	(code L8R)	1	---- ---	---- ---	---- ---	5462 A8R	
	(code L8T)	1	---- ---	---- ---	---- ---	5462 A8T	
	(manual w/airfoam pad)						
	(code L8B)	1	---- ---	---- ---	---- ---	5463 A8B	
	(code L8Q)	1	---- ---	---- ---	---- ---	5463 A8Q	
	(code L8R)	1	---- ---	---- ---	---- ---	5463 A8R	
	(code L8T)	1	---- ---	---- ---	---- ---	5463 A8T	
	(elec. 6 way w/airfoam pad)						
	(code L8B)	1	---- ---	---- ---	---- ---	5464 A8B	
	(code L8Q)	1	---- ---	---- ---	---- ---	5464 A8Q	
	(code L8R)	1	---- ---	---- ---	---- ---	5464 A8R	
	(code L8T)	1	---- ---	---- ---	---- ---	5464 A8T	

★ Indicates use as required.
⊟ Indicates parts not listed in any previous parts book.
May 1965, Supersedes Sept. 4, 1964.

Printed in U.S.A.
Prices and specifications subject to change without notice.
Right and left part numbers are on same line, first number is right, second number is left.
• Indicates change or addition.

MyMopar.com

CODE	REMARKS	PER CAR	SED.	4D H.T	STA. WGN.	2D H.T	CV. CP.
23-108-4	CUSHION, Front Seat - Cont'd						
	C3-H						
	(manual w/o airfoam pad)						
	(code H1B)	1	---- ---	---- ---	---- ---	7248 A1B	
	(code H1L)	1	---- ---	---- ---	---- ---	7248 A1L	
	(code H1N)	1	---- ---	---- ---	---- ---	7248 A1N	
	(code H1Q)	1	---- ---	---- ---	---- ---	7248 A1Q	
	(code H1R)	1	---- ---	---- ---	---- ---	7248 A1R	
	(code H1T)	1	---- ---	---- ---	---- ---	7248 A1T	
	(elec. 6 way w/o airfoam pad)						
	(code H1B)	1	---- ---	---- ---	---- ---	7249 A1B	
	(code H1L)	1	---- ---	---- ---	---- ---	7249 A1L	
	(code H1N)	1	---- ---	---- ---	---- ---	7249 A1N	
	(code H1Q)	1	---- ---	---- ---	---- ---	7249 A1Q	
	(code H1R)	1	---- ---	---- ---	---- ---	7249 A1R	
	(code H1T)	1	---- ---	---- ---	---- ---	7249 A1T	
	C1-L						
	(manual w/o airfoam pad)						
	(code L4B)	1	---- ---	---- ---	---- ---	5465 A4B	5465 A4B
	(code L4L)	1	---- ---	---- ---	---- ---	5465 A4L	5465 A4L
	(code L4N)	1	---- ---	---- ---	---- ---	5465 A4N	
	(code L4R)	1	---- ---	---- ---	---- ---	5465 A4R	5465 A4R
	(code L4T	1	---- ---	---- ---	---- ---	---- ---	5465 A4T
	(code L4X)	1	---- ---	---- ---	---- ---	---- ---	5465 A4X
	(elec. 6 way w/o airfoam pad)						
	(code L4B)	1	---- ---	---- ---	---- ---	5466 A4B	5466 A4B
	(code L4L)	1	---- ---	---- ---	---- ---	5466 A4L	5466 A4L
	(code L4N)	1	---- ---	---- ---	---- ---	5466 A4N	
	(code L4R)	1	---- ---	---- ---	---- ---	5466 A4R	5466 A4R
	(code L4T)	1	---- ---	---- ---	---- ---	---- ---	5466 A4T
	(code L4X)	1	---- ---	---- ---	---- ---	---- ---	5466 A4X
	C1, C2						
	(codes M3R, P3R)	1	---- ---	---- ---	---- ---	5446-7 A3R	5446-7 A3R
	(codes M3X, P3X)	1	---- ---	---- ---	---- ---	5446-7 A3X	5446 -7 A3X
	(code M1N)	1	---- ---	5474-5 A1N			
	(codes M4B, P4B)	1	---- ---	5476-7 A4B	---- ---	5476-7 A4B	5476-7 A4B
	(codes M4R, P4R)	1	---- ---	5476-7 A4R	---- ---	5476-7 A4R	5476-7 A4R
	(codes M4T, P4T)	1	---- ---	5476-7 A4T	---- ---	5476-7 A4T	5476-7 A4T
	(codes M4W, P4W)	1	---- ---	5476-7 A4W	---- ---	5476-7 A4W	5476-7 A4W
	(codes M4X, P4X)	1	---- ---	5476-7 A4X	---- ---	5476-7 A4X	5476-7 A4X
	(codes M4L, P4L)	1	---- ---	5476-7 A4L	---- ---	5476-7 A4L	5476-7 A4L
	(center cushion)						
	(codes M3R, P3R)	1	---- ---	---- ---	---- ---	6938 AR7	6938 AR7
	(codes M3X, P3X)	1	---- ---	---- ---	---- ---	6938 AX9	6938 AX9
	(code M1N)	1	---- ---	6947 AW3			
	(code L9B)	1	---- ---	---- ---	---- ---	6947 AB4	
	(code M4B)	1	---- ---	6947 AB8	---- ---	6947 AB8	6947 AB8
	(code M4R, L9R)	1	---- ---	6947 AR7	---- ---	6947 AR7	6947 AR7
	(code M4T)	1	---- ---	6947 AT6	---- ---	6947 AT6	6947 AT6
	(code M4W)	1	---- ---	6947 AW3	---- ---	6947 AW3	6947 AW3
	(codes M4X, L9X)	1	---- ---	6947 AX9	---- ---	6947 AX9	6947 AX9
	(code M4L)	1	---- ---	6947 AY3	---- ---	6947 AY3	6947 AY3
	C2 (4 way elec.)						
	(codes M3R, P3R)	1	---- ---	---- ---	---- ---	7628-9 A3R	7628-9 A3R
	(codes M3X, P3X)	1	---- ---	---- ---	---- ---	7628-9 A3X	7628-9 A3X
	(code M1N)	1	---- ---	7624-5 A1N			
	(codes M4B, P4B)	1	---- ---	7626-7 A4B	---- ---	7626-7 A4B	7626-7 A4B
	(codes M4R, P4R)	1	---- ---	7626-7 A4R	---- ---	7626-7 A4R	7626-7 A4R
	(codes M4T, P4T)	1	---- ---	7626-7 A4T	---- ---	7626-7 A4T	7626-7 A4T

★ Indicates use as required.
⊟ Indicates parts not listed in any previous parts book.
Right and left part numbers are on same line, first number is right, second number is left.
* Indicates change or addition.

MyMopar.com

Printed in U.S.A.
Prices and specifications subject to change without notice.
April 1966, Supersedes May 1965.

CODE	REMARKS	PER CAR	SED.	4D H.T	STA. WGN.	2D H.T	CV. CP.
23-108-4	CUSHION, Front Seat - Cont'd						
	C2 (4 way elec.)						
	(codes M4W, P4W)	1	---- ---	⊟7626-7 A4W	---- ---	⊟7626-7 A4W	⊟7626-7 A4W
	(codes M4X, P4X)	1	---- ---	⊟7626-7 A4X	---- ---	⊟7626-7 A4X	⊟7626-7 A4X
	(codes M4L, P4L)	1	---- ---	⊟7626-7 A4L	---- ---	⊟7626-7 A4L	⊟7626-7 A4L
	Y1-M						
	(manual w/o airfoam pad)						
	(code M3B)	1	---- ---	5495 A3B			
	(codes M3C, M3V, M3W)	1	---- ---	5495 A3W			
	(code M3K)	1	---- ---	5495 A3K			
	(code M3R)	1	---- ---	5495 A3R			
	(code M3T)	1	---- ---	5495 A3T			
	(code M3X)	1	---- ---	5495 A3X			
	(elec. 6 way w/o airfoam pad)						
	(code M3B)	1	---- ---	5489 A3B			
	(codes M3C, M3V, M3W)	1	---- ---	5489 A3W			
	(code M3K)	1	---- ---	5489 A3K			
	(code M3R)	1	---- ---	5489 A3R			
	(code M3T)	1	---- ---	5489 A3T			
	(code M3X)	1	---- ---	5489 A3X			
	(manual w/o airfoam pad)						
	(code M7B)	1	---- ---	5494 A7B			
	(code M7G)	1	---- ---	5494 A7G			
	(code M7N)	1	---- ---	5494 A7N			
	(code M7P)	1	---- ---	5494 A7P			
	(code M7Q)	1	---- ---	5494 A7Q			
	(code M7R)	1	---- ---	5494 A7R			
	(code M7T)	1	---- ---	5494 A7T			
	(elec. 6 way w/o airfoam pad)						
	(code M7B)	1	---- ---	5487 A7B			
	(code M7G)	1	---- ---	5487 A7G			
	(code M7N)	1	---- ---	5487 A7N			
	(code M7P)	1	---- ---	5487 A7P			
	(code M7Q)	1	---- ---	5487 A7Q			
	(code M7R)	1	---- ---	5487 A7R			
	(code M7T)	1	---- ---	5487 A7T			
	Y1-H						
	(code H3B)	1	---- ---	7320 A3B			
	(codes H3C, H3V, H3W)	1	---- ---	7320 A3W			
	(code H3R)	1	---- ---	7320 A3R			
	(code H3X)	1	---- ---	7320 A3X			
	(code H7A)	1	---- ---	5488 A7A			
	(code H7B)	1	---- ---	5488 A7B			
	(code H7G)	1	---- ---	5488 A7G			
	(code H7T)	1	---- ---	5488 A7T			
	(code H6A)	1	---- ---	7719 A6A			
	Y1						
	(code M9B)	1	---- ---	---- ---	---- ---	5492-3 A9B	5492-3 A9B
	(codes M9C, M9V, M9W, M5W, H8W)	1	---- ---	5492-3 A9W	---- ---	5492-3 A9W	5492-3 A9W
	(code M9K)	1	---- ---	---- ---	---- ---	5492-3 A9K	5492-3 A9K
	(codes M5R, M9R, H8R)	1	---- ---	5492-3 A9R	---- ---	5492-3 A9R	5492-3 A9R
	(code M9T)	1	---- ---	---- ---	---- ---	5492-3 A9T	5492-3 A9T
	(codes M5X, M9X, H8X)	1	---- ---	5492-3 A9X	---- ---	5492-3 A9X	5492-3 A9X
	(code M8B)	1	---- ---	---- ---	---- ---	5490-1 A8B	
	(code M8G)	1	---- ---	---- ---	---- ---	5490-1 A8G	
	(code M8N)	1	---- ---	---- ---	---- ---	5490-1 A8N	

★ Indicates use as required.
⊟ Indicates parts not listed in any previous parts book.

MyMopar.com

Printed in U.S.A.
Prices and specifications subject to change without notice.
Right and left part numbers are on same line, first number is right, second number is left.
* Indicates change or addition.

CODE	REMARKS	PER CAR	SED.	4D H.T	STA. WGN.	2D H.T	CV. CP.
23-108-4	CUSHION, Front Seat - Cont'd						
	Y1						
	(center cushion)						
	(code M9B)	1	---- ---	---- ---	---- ---	5443 AB4	5443 AB4
	(codes M9C, M9V, M5W, M9W, H8W)	1	---- ---	5443 AW3	---- ---	5443 AW3	5443 AW3
	(code M9K)	1	---- ---	---- ---	---- ---	5443 AM9	5443 AM9
	(codes M5R, M9R, H8R)	1	---- ---	5443 AR5	---- ---	5443 AR5	5443 AR5
	(code M9T)	1	---- ---	---- ---	---- ---	5443 AL3	5443 AL3
	(codes M5X, M9X, H8X)	1	---- ---	5443 AX9	---- ---	5443 AX9	5443 AX9
	(code M8B)	1	---- ---	---- ---	---- ---	5443 AB4	
	(code M8G)	1	---- ---	---- ---	---- ---	5443 AF9	
	(code M8N)	1	---- ---	---- ---	---- ---	5443 AW3	
23-108-5	COVER, Front Seat Cushion						
	C1-L						
	(code L1B)	1	7547 A1B				
	(code L1N)	1	7547 A1N				
	(code L1Q)	1	7547 A1Q				
	(code L1R)	1	7547 A1R				
	(code L1T)	1	7547 A1T				
	(6 window sedan)						
	(code L2B)	1	7568 A2B				
	(code L2L)	1	7568 A2L				
	(code L2N)	1	7568 A2N				
	(code L2Q)	1	7568 A2Q				
	(code L2R)	1	7568 A2R				
	(code L2T)	1	7568 A2T				
	C1-L						
	(code L5B)	1	7573 A5B				
	(code L5R)	1	7573 A5R				
	(code L5T)	1	7573 A5T				
	(code L4B)	1	---- ---	7549 A4B	7549 A4B		
	(code L4L)	1	---- ---	7549 A4L			
	(code L4N)	1	---- ---	7549 A4N			
	(code L4R)	1	---- ---	7549 A4R	7549 A4R		
	(code L4T)	1	---- ---	---- ---	7549 A4T		
	(code L4X)	1	---- ---	---- ---	7549 A4X		
	(code L8B)	1	---- ---	7548 A8B			
	(code L8Q)	1	---- ---	7548 A8Q			
	(code L8R)	1	---- ---	7548 A8R			
	(code L8T)	1	---- ---	7548 A8T			
	(code L4B)	1	---- ---	---- ---	---- ---	5873 A4B	5873 A4B
	(code L4L)	1	---- ---	---- ---	---- ---	5873 A4L	5873 A4L
	(code L4N)	1	---- ---	---- ---	---- ---	5873 A4N	
	(code L4R)	1	---- ---	---- ---	---- ---	5873 A4R	5873 A4R
	(code L4T)	1	---- ---	---- ---	---- ---	---- ---	5873 A4T
	(code L4X)	1	---- ---	---- ---	---- ---	---- ---	5873 A4X
	(code L8B)	1	---- ---	---- ---	---- ---	5872 A8B	
	(code L9B)	2	---- ---	---- --	---- --	*7598 A9B	
	(code L8Q)	1	---- ---	---- ---	---- ---	5872 A8Q	
	(code L9R)	2	---- ---	---- ---	---- ---	*7598 A9R	
	(code L8R)	1	---- ---	---- ---	---- ---	5872 A8R	
	(code L9X)	2	---- ---	---- ---	---- ---	*7598 A9X	
	(code L8T)	1	---- ---	---- ---	---- ---	5872 A8T	
	C2						
	(code M1N)	1	---- ---	5880-1 A1N			
	(codes M3R, P3R)	1	---- ---	---- ---	---- ---	5888-9 A3R	5888-9 A3R
	(codes M3X, P3X)	1	---- ---	---- ---	---- ---	5888-9 A3X	5888-9 A3X
	(codes M4B, P4B)	1	---- ---	5882-3 A4B	---- ---	5882-3 A4B	5882-3 A4B
	(codes M4R, P4R)	1	---- ---	5882-3 A4R	---- ---	5882-3 A4R	5882-3 A4R

★ Indicates use as required.
§ *Indicates parts not listed in any previous parts book.*
Right and left part numbers are on same line, first number is right, second number is left.
• Indicates change or addition.

MyMopar.com

Printed in U.S.A.
Prices and specifications subject to change without notice.
May 1965, Supersedes Sept. 4, 1964.

CODE	REMARKS	PER CAR	SED.	4D H.T	STA. WGN.	2D H.T	CV. CP.
23-108-5	COVER, Front Seat Cushion-Cont'd						
	C2						
	(codes M4T, P4T)	1	---- ---	5882-3 A4T	---- ---	5882-3 A4T	5882-3 A4T
	(codes M4W, P4W)	1	---- ---	5882-3 A4W	---- ---	5882-3 A4W	5882-3 A4W
	(codes M4X, P4X)	1	---- ---	5882-3 A4X	---- ---	5882-3 A4X	5882-3 A4X
	(codes M4L, P4L)	1	---- ---	---- ---	---- ---	5882-3 A4L	5882-3 A4L
	(center cushion)						
	(code M1N)	1	---- ---	6948 AW3			
	(code M3R)	1	---- ---	---- ---	---- ---	6948 AR7	6948 AR7
	(code M3X)	1	---- ---	---- ---	---- ---	*6948 AX9	*6948 AX9
	(code M4B)	1	---- ---	6948 AB8	---- ---	6948 AB8	6948 AB8
	(code M4R)	1	---- ---	6948 AR7	---- ---	6948 AR7	6948 AR7
	(code M4T)	1	---- ---	6948 AT6	---- ---	6948 AT6	6948 AT6
	(code M4W)	1	---- ---	6948 AW3	---- ---	6948 AW3	6948 AW3
	(code M4X)	1	---- ---	6948 AX9	---- ---	6948 AX9	6948 AX9
	(code M4Y)	1	---- ---	6948 AY3	---- ---	6948 AY3	6948 AY3
	C3-H (6 window sedan)						
	(code H1B)	1	5877 A1B	5877 A1B	---- ---	7250 A1B	
	(code H1L)	1	5877 A1L	5877 A1L	---- ---	7250 A1L	
	(code H1N)	1	5877 A1N	5877 A1N	5877 A1N	7250 A1N	
	(code H1Q)	1	5877 A1Q	5877 A1Q	---- ---	7250 A1Q	
	(code H1R)	1	5877 A1R	5877 A1R	---- ---	7250 A1R	
	(code H1T)	1	5877 A1T	5877 A1T	---- ---	7250 A1T	
	(code H4B)	1	---- ---	5886-7 A4B	5886-7 A4B	5886-7 A4B	
	(code H4L)	1	---- ---	5886-7 A4L	---- ---	5886-7 A4L	
	(code H4R)	1	---- ---	5886-7 A4R	5886-7 A4R	5886-7 A4R	
	(code H4T)	1	---- ---	---- ---	5886-7 A4T		
	(code H4X)	1	---- ---	5886-7 A4X	5886-7 A4X	5886-7 A4X	
	(center cushion cover)						
	(code H4B)	1	---- ---	6948 AB4	6948 AB4	⊟6948 AB4	
	(code H4L)	1	---- ---	6948 AY3	---- ---	6948 AY3	
	(code H4R)	1	---- ---	6948 AR7	6948 AR7	6948 AR7	
	(code H4T)	1	---- ---	---- ---	6948 AT6		
	(code H4X)	1	---- ---	6948 AX9	6948 AX9	6948 AX9	
	Y1-M						
	(code M3B)	1	---- ---	5895 A3B			
	(codes M3C, M3V, M3W)	1	---- ---	5895 A3W			
	(code M3K)	1	---- ---	5895 A3K			
	(code M3R)	1	---- ---	5895 A3R			
	(code M3T)	1	---- ---	5895 A3T			
	(code M3X)	1	---- ---	5895 A3X			
	(code M7B)	1	---- ---	5893 A7B			
	(code M7G)	1	---- ---	5893 A7G			
	(code M7N)	1	---- ---	5893 A7N			
	(code M7P)	1	---- ---	5893 A7P			
	(code M7Q)	1	---- ---	5893 A7Q			
	(code M7R)	1	---- ---	5893 A7R			
	(code M7T)	1	---- ---	5893 A7T			
	Y1-H						
	(code H3B)	1	---- ---	7319 A3B			
	(codes H3V, H3C, H3W)	1	---- ---	7319 A3W			
	(code H3R)	1	---- ---	7319 A3R			
	(code H3X)	1	---- ---	7319 A3X			
	(code H6A)	1	---- ---	7718 A6A			
	(code H7A)	1	---- ---	5894 A7A			
	(code H7B)	1	---- ---	5894 A7B			
	(code H7G)	1	---- ---	5894 A7G			
	(code H7T)	1	---- ---	5894 A7T			
	(code H8R)	1	---- ---	5898-9 A9R			
	(code H8W)	1	---- ---	5898-9 A9W			
	(code H8X)	1	---- ---	5898-9 A9X			

★ Indicates use as required.
⊟ Indicates parts not listed in any previous parts book.

April 1966, Supersedes May 1965.

Printed in U.S.A.
Prices and specifications subject to change without notice.
Right and left part numbers are on same line, first number is right, second number is left.
* Indicates change or addition.

MyMopar.com

CODE	REMARKS	PER CAR	SED.	4D H.T	STA. WGN.	2D H.T	CV. CP.
23-108-5	COVER, Front Seat Cushion-Cont'd						
	Y1-H						
	(center cushion cover)						
	(code H8R)	1	---- ---	5864 AR5			
	(code H8W)	1	---- ---	5864 AW3			
	(code H8X)	1	---- ---	5864 AX9			
	Y1-M						
	(code M5R)	1	---- ---	5898-9 A9R			
	(code M5W)	1	---- ---	5898-9 A9W			
	(code M5X)	1	---- ---	5898-9 A9X			
	(code M8B)	1	---- ---	---- ---	---- ---	5896-7 A8B	
	(code M8G)	1	---- ---	---- ---	---- ---	5896-7 A8G	
	(code M8N)	1	---- ---	---- ---	---- ---	5896-7 A8N	
	(code M9B)	1	---- ---	---- ---	---- ---	5898-9 A9B	5898-9 A9B
	(codes M9C, M9V, M9W)	1	---- ---	---- ---	---- ---	5898-9 A9W	5898-9 A9W
	(code M9K)	1	---- ---	---- ---	---- ---	5898-9 A9K	5898-9 A9K
	(code M9R)	1	---- ---	---- ---	---- ---	5898-9 A9R	5898-9 A9R
	(code M9T)	1	---- ---	---- ---	---- ---	5898-9 A9T	5898-9 A9T
	(code M9X)	1	---- ---	---- ---	---- ---	5898-9 A9X	5898-9 A9X
	Y1-M						
	(center cushion cover)						
	(codes M8B, M9B)	1	---- ---	---- ---	---- ---	5864 AB4	5864 AB4
	(codes M8N, M9C, M9V, M5W, M9W)	1	---- ---	5864 AW3	---- ---	5864 AW3	5864 AW3
	(code M9K)	1	---- ---	---- ---	---- ---	5864 AM9	5864 AM9
	(code M8G)	1	---- ---	---- ---	---- ---	5864 AF9	5864 AF9
	(codes M5R, M9R)	1	---- ---	5864 AR5	---- ---	5864 AR5	5864 AR5
	(codes M5X, M9X)	1	---- ---	5864 AX9	---- ---	5864 AX9	5864 AX9
	(code M9T)	1	---- ---	---- ---	---- ---	5864 AL3	5864 AL3
23-108-6	FLAP, Front Cushion Rear						
	C2, C3						
	(w/elec. seat adjuster)						
	(codes M4B, H4B, P4B)	1	---- ---	*4112 AB8	*4112 AB8	*4112 AB8	*4112 AB8
	(codes M3R, M4R, H4R, P3R, P4R)	1	---- ---	*4112 AR8	*4112 AR8	*4112 AR8	*4112 AR8
	(codes M4T, H4T, P4T)	1	---- ---	⊟4112 AT8	⊟4112 AT8	⊟4112 AT8	⊟4112 AT8
	(codes M1N, M3X, M4X, P3X, P4X, H4X, M4W, M4L, P4L, H4L, P4W)	1	---- ---	*4112 AX9	*4112 AX9	*4112 AX9	*4112 AX9
	(code L9B)	1	---- ---	---- ---	---- ---	4112 AB8	
	(code L9R)	1	---- ---	---- ---	---- ---	4112 AR8	
	(code L9X)	1	---- ---	---- ---	---- ---	4112 AX9	
	Y1						
	(codes M8B, M9B)	1	---- ---	---- ---	---- ---	4113 ABB	4113 ABB
	(code M9K)	1	---- ---	---- ---	---- ---	4113 AOM	4113 AOM
	(codes M5X, M9X, H8X)	1	---- ---	4113 AXX	---- ---	4113 AXX	4113 AXX
	(code M9T)	1	---- ---	---- ---	---- ---	4113 ALL	4113 ALL
	(codes M5R, M9R, H8R)	1	---- ---	4113 AOR	---- ---	4113 AOR	4113 AOR
	(codes M5W, M9V, M9C, M9W, H8W)	1	---- ---	4113 AOW	---- ---	4113 AOW	4113 AOW
	(code M8N)	1	---- ---	---- ---	---- ---	4113 AWX	
	(code M8G)	1	---- ---	---- ---	---- ---	4113 AOF	
23-108-12	BACK, Front Seat						
	C1-L (6 window sedan)						
	(code L2B)	1	7546 A2B				
	(code L2L)	1	7546 A2L				
	(code L2N)	1	7546 A2N				
	(code L2Q)	1	7546 A2Q				
	(code L2R)	1	7546 A2R				
	(code L2T)	1	7546 A2T				

● Indicates use as required.
⊟ Indicates parts not listed in any previous parts book.
Right and left part numbers are on same line, first number is right, second number is left.
* Indicates change or addition.

Printed in U.S.A.
Prices and specifications subject to change without notice.
May 1965, Supersedes Sept. 4, 1964.

MyMopar.com

CODE	REMARKS	PER CAR	SED.	4D H.T	STA. WGN.	2D H.T	CV. CP.
23-108-12	BACK, Front Seat - Cont'd						
	C1-L						
	(4 window and 6 window sedan)						
	(code L5B)	1	7569 A5B				
	(code L5R)	1	7569 A5R				
	(code L5T)	1	7569 A5T				
	(4 window sedan)						
	(code L1B)	1	7543 A1B				
	(code L1N)	1	7543 A1N				
	(code L1Q)	1	7543 A1Q				
	(code L1R)	1	7543 A1R				
	(code L1T)	1	7543 A1T				
	(code L4B)	1	---- ---	5653 A4B	5653 A4B	5658-9 A4B	5658-9 A4B
	(code L4L)	1	---- ---	5653 A4L	---- ---	5658-9 A4L	5658-9 A4L
	(code L4N)	1	---- ---	5653 A4N	---- ---	5658-9 A4N	
	(code L4R)	1	---- ---	5653 A4R	5653 A4R	5658-9 A4R	5658-9 A4R
	(code L4T)	1	---- ---	---- ---	5653 A4T	---- ---	5658-9 A4T
	(code L4X)	1	---- ---	---- ---	5653 A4X	---- ---	5658-9 A4X
	(code L8B)	1	---- ---	7544 A8B	---- ---	5656-7 A8B	
	(code L8Q)	1	---- ---	7544 A8Q	---- ---	5656-7 A8Q	
	(code L8R)	1	---- ---	7544 A8R	---- ---	5656-7 A8R	
	(code L8T)	1	---- ---	7544 A8T	---- ---	5656-7 A8T	
	Washer (seat back stop)	2	---- ---	---- ---	---- ---	6008 077	6008 077
	Push-Nut (seat back to cushion)	2	---- ---	---- ---	---- ---	6024 203	6024 203
23-108-15	SPRING and COVER, Front Seat Back						
	C1-L						
	UP TO Serial No. C153-195142						
	(code L9B)	1	---- ---	---- ---	---- ---	*7595 A9B	
	(code L9R)	1	---- ---	---- ---	---- ---	*7595 A9R	
	(code L9X)	1	---- ---	---- ---	---- ---	*7595 A9X	
	AFTER Serial No. C153-195142						
	(code L9B)	1	---- ---	---- ---	---- ---	⊟8030 A9B	
	(code L9R)	1	---- ---	---- ---	---- ---	⊟8030 A9R	
	(code L9X)	1	---- ---	---- ---	---- ---	⊟8030 A9X	
	C3-H (6 window sedan)						
	(code H1B)	1	5767 A1B	5767 A1B	5767 A1B	7244-5 A1B	
	(code H1L)	1	5767 A1L	5767 A1L	5767 A1L	7244-5 A1L	
	(code H1N)	1	5767 A1N	5767 A1N	5767 A1N	7244-5 A1N	
	(code H1Q)	1	5767 A1Q	5767 A1Q	5767 A1Q	7244-5 A1Q	
	(code H1R)	1	5767 A1R	5767 A1R	5767 A1R	7244-5 A1R	
	(code H1T)	1	5767 A1T	5767 A1T	5767 A1T	7244-5 A1T	
	Screw (to cushion wedge spring adj.)	2	6016 005	6016 005	5016 005		
	C2, C3						
	(w/o headrest)						
	(code M1N)	1	---- ---	5772-3 A1N			
	(code H4B)	1	---- ---	5762-3 A4B	5762-3 A4B	5762-3 A4B	
	(code H4L)	1	---- ---	5762-3 A4L	---- ---	5762-3 A4L	
	(code H4R)	1	---- ---	5762-3 A4R	5762-3 A4R	5762-3 A4R	
	(code H4T)	1	---- ---	---- ---	5762-3 A4T		
	(code H4X)	1	---- ---	5762-3 A4X	5762-3 A4X	5762-3 A4X	
	(codes M4B, P4B)	1	---- ---	5776-7 A4B	---- ---	5776-7 A4B	5776-7 A4B
	(codes M4R, P4R)	1	---- ---	5776-7 A4R	---- ---	5776-7 A4R	5776-7 A4R
	(codes M4T, P4T)	1	---- ---	5776-7 A4T	---- ---	5776-7 A4T	5776-7 A4T

★ Indicates use as required.
⊟ Indicates parts not listed in any previous parts book.
May 1965, Supersedes Sept. 4, 1964.

Printed in U.S.A.
Prices and specifications subject to change without notice.
Right and left part numbers are on same line, first number is right, second number is left.
* Indicates change or addition.

MyMopar.com

CODE	REMARKS	PER CAR	SED.	4D H.T	STA. WGN.	2D H.T	CV. CP.
23-108-15	SPRING and COVER, Front Seat Back - Cont'd						
	C2, C3 (w/o headrest)						
	(codes M4W, P4W)	1	---- ---	5776-7A4W	---- ---	5776-7A4W	5776-7A4W
	(codes M4X, P4X)	1	---- ---	5776-7A4X	---- ---	5776-7A4X	5776-7A4X
	(codes M4L, P4L)	1	---- ---	---- ---	---- ---	5776-7A4L	5776-7A4L
	(codes M3R, P3R)	1	---- ---	---- ---	---- ---	5754-5A3R	5754-5A3R
	(codes M3X, P3X)	1	---- ---	---- ---	---- ---	5754-5A3X	5754-5A3X
	(w/headrest)						
	(code M1N)	1	---- ---	5774-5A1N			
	(code H4B)	1	---- ---	5764-5A4B	5764-5A4B	5764-5A4B	
	(code H4L)	1	---- ---	5764-5A4L	---- ---	5764-5A4L	
	(code H4R)	1	---- ---	5764-5A4R	5764-5A4R	5764-5A4R	
	(code H4T)	1	---- ---	---- ---	5764-5A4T		
	(code H4X)	1	---- ---	5764-5A4X	5764-5A4X	5764-5A4X	
	(codes M4B, P4B)	1	---- ---	5778-9A4B	---- ---	5778-9A4B	5778-9A4B
	(codes M4R, P4R)	1	---- ---	5778-9A4R	---- ---	5778-9A4R	5778-9A4R
	(codes M4T, P4T)	1	---- ---	5778-9A4T	---- ---	5778-9A4T	5778-9A4T
	(codes M4W, P4W)	1	---- ---	5778-9A4W	---- ---	5778-9A4W	5778-9A4W
	(codes M4X, P4X)	1	---- ---	5778-9A4X	---- ---	5778-9A4X	5778-9A4X
	(codes M4L, P4L)	1	---- ---	---- ---	---- ---	5778-9A4L	5778-9A4L
	(codes M3R, P3R)	1	---- ---	---- ---	---- ---	5756-7A3R	5756-7A3R
	(codes M3X, P3X)	1	---- ---	---- ---	---- ---	5756-7A3X	5756-7A3X
	Push-Nut (seat back to cushion)	2	---- ---	---- ---	---- ---	6024 203	6024 203
	Y1-M						
	(code M3B)	1	---- ---	5786A3B			
	(codes M3C, M3V, M3W)	1	---- ---	5786A3W			
	(code M3K)	1	---- ---	5786A3K			
	(code M3R)	1	---- ---	5786A3R			
	(code M3T)	1	---- ---	5786A3T			
	(code M3X)	1	---- ---	5786A3X			
	(code M7B)	1	---- ---	5784A7B			
	Y1-M						
	(code M7G)	1	---- ---	5784A7G			
	(code M7N)	1	---- ---	5784A7N			
	(code M7P)	1	---- ---	5784A7P			
	(code M7Q)	1	---- ---	5784A7Q			
	(code M7R)	1	---- ---	5784A7R			
	(code M7T)	1	---- ---	5784A7T			
	Y1-H						
	(code H3B)	1	---- ---	7327A3B			
	(codes H3C, H3V, H3W)	1	---- ---	7327A3W			
	(code H3R)	1	---- ---	7327A3R			
	(code H3X)	1	---- ---	7327A3X			
	(code H6A)	1	---- ---	7732A6A			
	(code H7A)	1	---- ---	5788A7A			
	(code H7B)	1	---- ---	5788A7B			
	(code H7G)	1	---- ---	5788A7G			
	(code H7T)	1	---- ---	5788A7T			
	Y1						
	(code M8B)	1	---- ---	---- ---	---- ---	5790-1A8B	
	(code M8G)	1	---- ---	---- ---	---- ---	5790-1A8G	
	(code M8N)	1	---- ---	---- ---	---- ---	5790-1A8N	
	(code M9B)	1	---- ---	---- ---	---- ---	5792-3A9B	5792-3A9B
	(codes M9C, M9V, M5W, M9W, H8W)	1	---- ---	5792-3A9W	---- ---	5792-3A9W	5792-3A9W
	(code M9K)	1	---- ---	---- ---	---- ---	5792-3A9K	5792-3A9K
	(codes M5R, M9R, H8R)	1	---- ---	5792-3A9R	---- ---	5792-3A9R	5792-3A9R

★ Indicates use as required.
⊟ Indicates parts not listed in any previous parts book.
Right and left part numbers are on same line, first number is right, second number is left.
* Indicates change or addition.

MyMopar.com

Printed in U.S.A.
Prices and specifications subject to change without notice.
May 1965, Supersedes Sept. 4, 1964.

CODE	REMARKS	PER CAR	SED.	4D H.T	STA. WGN.	2D H.T	CV. CP.
23-108-15	SPRING and COVER, Front Seat Back - Cont'd						
	Y1						
	(code M9T)	1	---- ---	---- ---	---- ---	5792-3 A9T	5792-3 A9T
	(codes M5X, M9X, H8X)	1	---- ---	5792-3 A9X	---- ---	5792-3 A9X	5792-3 A9X
	Bolt and Washer (reclining seat to cushion mounting)	1	---- ---	180 121	---- ---	180 121	180 121
23-108-16	COVER, Front Seat Back						
	C1-L						
	(code L1B)	1	7560 A1B				
	(code L1N)	1	7560 A1N				
	(code L1Q)	1	7560 A1Q				
	(code L1R)	1	7560 A1R				
	(code L1T)	1	7560 A1T				
	(6 window sedan)						
	(code L2B)	1	7563 A2B				
	(code L2L)	1	7563 A2L				
	(code L2N)	1	7563 A2N				
	(code L2Q)	1	7563 A2Q				
	(code L2R)	1	7563 A2R				
	(code L2T)	1	7563 A2T				
	C1-L						
	(code L5B)	1	7570 A5B				
	(code L5R)	1	7570 A5R				
	(code L5T)	1	7570 A5T				
	(code L8B)	1	---- ---	7561 A8B			
	(code L8Q)	1	---- ---	7561 A8Q			
	(code L8R)	1	---- ---	7561 A8R			
	(code L8T)	1	---- ---	7561 A8T			
	(code L4B)	1	---- ---	7562 A4B	7562 A4B	6054-5 A4B	6054-5 A4B
	(code L4L)	1	---- ---	7562 A4L	---- ---	6054-5 A4L	6054-5 A4L
	(code L4N)	1	---- ---	7562 A4N	---- ---	6054-5 A4N	
	(code L4R)	1	---- ---	7562 A4R	7562 A4R	6054-5 A4R	6054-5 A4R
	(code L4T)	1	---- ---	7562 A4T	---- ---	---- ---	6054-5 A4T
	(code L4X)	1	---- ---	*7562 A4X	---- ---	---- ---	*6054-5 A4X
	(code L8B)	1	---- ---	---- ---	---- ---	6052-3 A8B	
	(code L8Q)	1	---- ---	---- ---	---- ---	6052-3 A8Q	
	(code L8R)	1	---- ---	---- ---	---- ---	6052-3 A8R	
	(code L8T)	1	---- ---	---- ---	---- ---	6052-3 A8T	
	UP TO Serial No. C153-195142						
	(code L9B)	2	---- ---	---- ---	---- ---	*7596 A9B	
	(code L9R)	2	---- ---	---- ---	---- ---	*7596 A9R	
	(code L9X)	2	---- ---	---- ---	---- ---	*7596 A9X	
	AFTER Serial No. C153-195142						
	(code L9B)	2	---- ---	---- ---	---- ---	⊟8031 A9B	
	(code L9R)	2	---- ---	---- ---	---- ---	⊟8031 A9R	
	(code L9X)	2	---- ---	---- ---	---- ---	⊟8031 A9X	
	C2, C3						
	(code M1N)	1	---- ---	6064-5 A1N			
	(codes M4B, P4B)	1	---- ---	6066-7 A4B	---- ---	6066-7 A4B	6066-7 A4B
	(codes M4R, P4R)	1	---- ---	6066-7 A4R	---- ---	6066-7 A4R	6066-7 A4R
	(codes M4T, P4T)	1	---- ---	6066-7 A4T	---- ---	6066-7 A4T	6066-7 A4T
	(codes M4W, P4W)	1	---- ---	6066-7 A4W	---- ---	6066-7 A4W	6066-7 A4W
	(codes M4X, P4X)	1	---- ---	6066-7 A4X	---- ---	6066-7 A4X	6066-7 A4X
	(codes M4L, P4L)	1	---- ---	---- ---	---- ---	6066-7 A4L	6066-7 A4L
	(codes M3R, P3R)	1	---- ---	---- ---	---- ---	6072-3 A3R	6072-3 A3R
	(codes M3X, P3X)	1	---- ---	---- ---	---- ---	6072-3 A3X	6072-3 A3X

★ Indicates use as required.
⊟ Indicates parts not listed in any previous parts book.

Printed in U.S.A.
Prices and specifications subject to change without notice.
Right and left part numbers are on same line, first number is right, second number is left.
* Indicates change or addition.

MyMopar.com

CODE	REMARKS	PER CAR	SED.	4D H.T	STA. WGN.	2D H.T	CV. CP.
23-108-16	COVER, Front Seat Back - Cont'd						
	C2, C3						
	(6 window sedan)						
	(code H1B)	1	6058 A1B	6058 A1B			
	(code H1L)	1	6058 A1L	6058 A1L			
	(code H1N)	1	6058 A1N	6058 A1N	6058 A1N		
	(code H1Q)	1	6058 A1Q	6058 A1Q			
	(code H1R)	1	6058 A1R	6058 A1R			
	(code H1T)	1	6058 A1T	6058 A1T			
	C3-H						
	(code H4B)	1	---- ---	6070-1 A4B	6070-1 A4B	6070-1 A4B	
	(code H4L)	1	---- ---	6070-1 A4L	---- ---	6070-1 A4L	
	(code H4R)	1	---- ---	6070-1 A4R	6070-1 A4R	6070-1 A4R	
	(code H4T)	1	---- ---	---- ---	6070-1 A4T		
	(code H4X)	1	---- ---	6070-1 A4X	6070-1 A4X	6070-1 A4X	
	(code H1B)	1	---- ---	---- ---	---- ---	7246-7 A1B	
	(code H1L)	1	---- ---	---- ---	---- ---	7246-7 A1L	
	(code H1N)	1	---- ---	---- ---	---- ---	7246-7 A1N	
	(code H1Q)	1	---- ---	---- ---	---- ---	7246-7 A1Q	
	(code H1R)	1	---- ---	---- ---	---- ---	7246-7 A1R	
	(code H1T)	1	---- ---	---- ---	---- ---	7246-7 A1T	
	Y1-M						
	(code M3B)	1	---- ---	6080 A3B			
	(code M3C)	1	---- ---	6080 A3C			
	(code M3V)	1	---- ---	6080 A3V			
	(code M3W)	1	---- ---	6080 A3W			
	(code M3K)	1	---- ---	6080 A3K			
	(code M3R)	1	---- ---	6080 A3R			
	(code M3T)	1	---- ---	6080 A3T			
	(code M3X)	1	---- ---	6080 A3X			
	(code M7B)	1	---- ---	6078 A7B			
	(code M7G)	1	---- ---	6078 A7G			
	(code M7N)	1	---- ---	6078 A7N			
	(code M7P)	1	---- ---	6078 A7P			
	(code M7Q)	1	---- ---	6078 A7Q			
	(code M7R)	1	---- ---	6078 A7R			
	(code M7T)	1	---- ---	6078 A7T			
	Y1-H						
	(code H3B)	1	---- ---	7326 A3B			
	(codes H3C, H3V, H3W)	1	---- ---	7326 A3W			
	(code H3R)	1	---- ---	7326 A3R			
	(code H3X)	1	---- ---	7326 A3X			
	(code H6A)	1	---- ---	7731 A6A			
	(code H7A)	1	---- ---	6082 A7A			
	(code H7B)	1	---- ---	6082 A7B			
	(code H7G)	1	---- ---	6082 A7G			
	(code H7T)	1	---- ---	6082 A7T			
	Y1						
	(code M8B)	1	---- ---	---- ---	---- ---	6084-5 A8B	
	(code M8G)	1	---- ---	---- ---	---- ---	6084-5 A8G	
	(code M8N)	1	---- ---	---- ---	---- ---	6084-5 A8N	
	(code M9B)	1	---- ---	---- ---	---- ---	6086-7 A9B	6086-7 A9B
	(codes M9C, M9V, M5W, M9W, H8W)	1	---- ---	6086-7 A9W	---- ---	6086-7 A9W	6086-7 A9W
	(code M9K)	1	---- ---	---- ---	---- ---	6086-7 A9K	6086-7 A9K
	(codes M5R, M9R, H8R)	1	---- ---	6086-7 A9R	---- ---	6086-7 A9R	6086-7 A9R
	(code M9T)	1	---- ---	---- ---	---- ---	6086-7 A9T	6086-7 A9T
	(codes M5X, M9X, H8X)	1	---- ---	6086-7 A9X	---- ---	6086-7 A9X	6086-7 A9X

★ Indicates use as required.
⊟ Indicates parts not listed in any previous parts book.
Right and left part numbers are on same line, first number is right, second number is left.
* Indicates change or addition.

MyMopar.com

Printed in U.S.A.
Prices and specifications subject to change without notice.
May 1965, Supersedes Sept. 4, 1964.

CODE	REMARKS	PER CAR	SED.	4D H.T	STA. WGN.	2D H.T	CV. CP.
23-108-18	CASING, Headrest						
	C2, C3	1	---- ---	---- ---	2446 954	2446 954	2446 954
	Y1-M, Y1-H	1	---- ---	2577 188	---- ---	2577 188	2577 188
23-108-19	HEADREST, Front Seat Back						
	C2, C3						
	(codes M4B, P4B)	1	---- ---	*7593 AB8	---- ---	*7593 AB8	*7953 AB8
	(codes M4T, P4T, H4T)	1	---- ---	7593 AT6	7593 AT6	7593 AT6	7593 AT6
	(codes M4W, P4W, M1N)	1	---- ---	7593 AW3	---- ---	7593 AW3	7593 AW3
	(codes M3X, P3X, M4X, P4X, H4X)	1	---- ---	7593 AX9	7593 AX9	7593 AX9	7593 AX9
	(codes M4L, P4L, H4L)	1	---- ---	7593 AY3	---- ---	7593 AY3	7593 AY3
	(code H4B)	1	---- ---	7593 AB4	7593 AB4	7593 AB4	
	(codes M3R, P3R, M4R, H4R, P4R)	1	---- ---	7593 AR7	---- ---	7593 AR7	
	Y1						
	(codes M8B, M9B)	1	---- ---	---- ---	---- ---	7582 AB4	7582 AB4
	(codes M8N, M9C, M9V, M5W, M9W, H8W)	1	---- ---	7582 AW3	---- ---	7582 AW3	7582 AW3
	(code M8G)	1	---- ---	---- ---	---- ---	7582 AF9	
	(code M9K)	1	---- ---	---- ---	---- ---	7582 AM9	7582 AM9
	(codes M5R, M9R, H8R)	1	---- ---	7582 AR5	---- ---	7582 AR5	7582 AR5
	(code M9T)	1	---- ---	---- ---	---- ---	7582 AL3	7582 AL3
	(codes M5X, M9X, H8X)	1	---- ---	7582 AX9	---- ---	7582 AX9	7582 AX9
23-108-20	COVER, Front Seat Back Headrest						
	C2, C3						
	(codes M4B, P4B)	1	---- ---	7592 AB8	---- ---	7592 AB8	7592 AB8
	(code H4B)	1	---- ---	7592 AB4	---- ---	7592 AB4	
	(codes M4T, P4T, H4T)	1	---- ---	7592 AT6	7592 AT6	7592 AT6	7592 AT6
	(codes M1N, M4W, P4W)	1	---- ---	7592 AW3	---- ---	7592 AW3	7592 AW3
	(codes M3X, P3X, M4X, P4X)	1	---- ---	7592 AX9	7592 AX9	7592 AX9	7592 AX9
	(codes M4L, P4L, H4L)	1	---- ---	7592 AY3	-- ---	7592 AY3	7592 AY3
	(codes M3R, P3R, M4R, P4R, H4R)	1	---- ---	7592 AR7	7592 AR7	7592 AR7	7592 AR7
	Y1						
	(codes M8B, M9B)	1	---- ---	---- ---	---- ---	7583 AB4	7583 AB4
	(codes M8N, M9C, M9V, M5W, M9W, H8W)	1	---- ---	7583 AW3	---- ---	7583 AW3	7583 AW3
	(code M9K)	1	---- ---	---- ---	---- ---	7583 AM9	7583 AM9
	(codes M5R, M9R, H8R)	1	---- ---	7583 AR5	---- ---	7583 AR5	7583 AR5
	(code M9T)	1	---- ---	---- ---	---- ---	7583 AL3	7583 AL3
	(code M8G)	1	---- ---	---- ---	---- ---	7583 AF9	7583 AF9
	(codes M5X, M9X, H8X)	1	---- ---	7583 AX9	---- ---	7583 AX9	7583 AX9
	(finish cover)	1	---- ---	4310 VX9	---- ---	4310 VX9	4310 VX9
23-108-22	COVER, Seat Reclining Mechanism						
	C2, C3 (paint as required)	1	---- ---	2717 AX9	2717 AX9	2717 AX9	2717 AX9
	Y1 (paint as required)	1	---- ---	2728 VX8	---- ---	2728 VX8	2728 VX8
23-108-23	INSULATOR, Front Seat Back Headrest						
	C2, C3, Y1	2	---- ---	2494 608	2494 608	2494 608	2494 608
23-108-24	PANEL and BRACKET, Front Seat Back Headrest						
	C2, C3, Y1 (paint as required)	2	---- ---	2494 371	2494 371	2494 371	2494 371
23-108-32	PANEL, Back of Front Seat Back						
	C3-H (6 window sedan) (panel)						
	(code H1B)	1	6153 A1B	6153 A1B	6153 A1B	6162-3 A1B	
	(code H1L)	1	6153 A1L	6153 A1L	6153 A1L	6162-3 A1L	
	(code H1N)	1	6153 A1N	6153 A1N	6153 A1N	6162-3 A1N	

● Indicates use as required.
⊟ Indicates parts not listed in any previous parts book.

April 1966, Supersedes May 1965.

MyMopar.com

Printed in U.S.A.
Prices and specifications subject to change without notice.
Right and left part numbers are on same line, first number is right, second number is left.
* Indicates change or addition.

CODE	REMARKS	PER CAR	SED.	4D H.T	STA. WGN.	2D H.T	CV. CP.
23-108-32	PANEL, Back of Front Seat Back - Cont'd						
	C3-H (6 window sedan) (panel)						
	(code H1Q)	1	6153 A1Q	6153 A1Q	6153 A1Q	⊟6162-3 A1Q	
	(code H1R)	1	6153 A1R	6153 A1R	6153 A1R	⊟6162-3 A1R	
	(code H1T)	1	6153 A1T	6153 A1T	6153 A1T	⊟6162-3 A1T	
	Fastener (foundation)	6	6000 365	6000 365	6000 365	6000 365	
	(cover)						
	(code H1B)	1	6154 A1B	6154 A1B	6154 A1B		
	(code H1L)	1	6154 A1L	6154 A1L	6154 A1L		
	(code H1N)	1	6154 A1N	6154 A1N	6154 A1N		
	(code H1Q)	1	6154 A1Q	6154 A1Q	6154 A1Q		
	(code H1R)	1	6154 A1R	6154 A1R	6154 A1R		
	(code H1T)	1	6154 A1T	6154 A1T	6154 A1T		
	C1-L						
	(code L9B)	2	---- ---	---- ---	---- ---	6160 A9B	
	(code L9R)	2	---- ---	---- ---	---- ---	6160 A9R	
	(code L9X)	2	---- ---	---- ---	---- ---	6160 A9X	
	Y1						
	(codes M8B, M9B)	1	---- ---	---- ---	---- ---	6184 AB4	6184 AB4
	(codes M5W, M9C, M9V, M9W, H8W)	1	---- ---	6184 AW3	---- ---	6184 AW3	6184 AW3
	(code M9K)	1	---- ---	---- ---	---- ---	6184 AM9	6184 AM9
	(code M8G)	1	---- ---	---- ---	---- ---	6184 AF9	
	(codes M5R, M9R, H8R)	1	---- ---	6184 AR5	---- ---	6184 AR5	6184 AR5
	(code M9T)	1	---- ---	---- ---	---- ---	6184 AL3	6184 AL3
	(codes M5X, M9X, H8X)	1	---- ---	6184 AX9	---- ---	6184 AX9	6184 AX9
	Y1-M (upper)						
	(codes M3B, M7B)	1	---- ---	6117 AB4			
	(codes M3C, M3V, M3W, M7N)	1	---- ---	6117 AW3			
	(code M3K)	1	---- ---	6117 AM9			
	(codes M3R, M7R)	1	---- ---	6117 AR5			
	(codes M3T, M7T)	1	---- ---	6117 AL3			
	(code M7G)	1	---- ---	6117 AF9			
	(codes M3X, M7P)	1	---- ---	6117 AX9			
	(code M7Q)	1	---- ---	6117 AQ4			
	(lower)						
	(codes M3B, M7B)	1	---- ---	6114 ABB			
	(code M3C)	1	---- ---	6114 AWB			
	(code M3K)	1	---- ---	6114 AOM			
	(codes M3R, M7R)	1	---- ---	6114 AOR			
	(codes M3T, M7T)	1	---- ---	6114 ALL			
	(code M3V)	1	---- ---	6114 AWR			
	(codes M3W, M7N)	1	---- ---	6114 AWX			
	(codes M3X, M7P)	1	---- ---	6114 AXX			
	(code M7G)	1	---- ---	6114 AOF			
	(code M7Q)	1	---- ---	6114 AQQ			
	Fastener (storage compt.)	20	---- ---	6000 365	---- ---	6000 365	6000 365
	Y1-H						
	(codes H6A, H7A)	1	---- ---	7335 AAX			
	(codes H3B, H7B)	1	---- ---	7335 ABB			
	(code H7G)	1	---- ---	7335 AFF			
	(code H7T)	1	---- ---	7335 ALL			
	(code H3C)	1	---- ---	7335 AWB			
	(code H3R)	1	---- ---	7335 ARR			
	(code H3V)	1	---- ---	7335 AWR			
	(code H3W)	1	---- ---	7335 AWX			
	(code H3X)	1	---- ---	7335 AXX			

★ Indicates use as required.
⊟ Indicates parts not listed in any previous parts book.
Right and left part numbers are on same line, first number is right, second number is left.
* Indicates change or addition.

MyMopar.com

Printed in U.S.A.
Prices and specifications subject to change without notice.
May 1965, Supersedes Sept. 4, 1964.

CODE	REMARKS	PER CAR	SED.	4D H.T	STA. WGN.	2D H.T	CV. CP.
23-108-36	PAD, Back of Front Seat Crash Y1-H						
	(codes H6A, H7A)	1	---- ---	7322 AA3			
	(codes H3B, H7B)	1	---- ---	7322 AB4			
	(code H7G)	1	---- ---	7322 AF9			
	(code H7T)	1	---- ---	7322 AL3			
	(codes H3C, H3V, H3W)	1	---- ---	7322 AW3			
	(code H3R)	1	---- ---	7322 AR5			
	(code H3X)	1	---- ---	7322 AX9			
23-108-66	COVER, Front Seat Center Arm Rest Stanchion C2, C3, Y1	1	---- ---	4388-9 TX8	4388-9 TX8	4388-9 TX8	4388-9 TX8
23-108-71	BRACKET, Front Seat Center Cushion Mounting C2-M, C3-H Rear	1	---- ---	2484 704-5	2484 704-5	2484 704-5	2484 704-5
	(center cushion frame)	1	---- ---	2481 803	---- ---	2481 803	2481 803
23-108-84	COVER, Front Seat Cushion to Back Hinge Post C2, C3, Y1 (paint as required) (reclining seat)	1	---- ---	⊟4390 VT6	---- ---	⊟4390 VT6	⊟4390 VT6
23-108-98	SHIELD, Front Seat Side C1 (comp.)						
	(manual and power) Right	1	*2577 206	*2577 206	*2577 206		
	(manual) Left	1	*2577 207	*2577 207	*2577 207		
	(power) Left	1	*2577 209	*2577 209	*2577 209		
	(cushion side)						
	(manual and power) Right	1	---- ---	---- ---	---- ---	*2577 202	*2577 202
	(manual) Left	1	---- ---	---- ---	---- ---	*2577 203	*2577 203
	(power) Left	1	---- ---	---- ---	---- ---	*2577 205	*2577 205
	C2, C3 (bucket seats) (chrome) (back frame)	4	---- ---	2440 219	2440 219	2440 219	2440 219
	(cushion side) Right	2	---- ---	2494 164	2494 164	2494 164	2494 164
	Left	2	---- ---	2440 340	2440 340	2440 340	2440 340
	C1-L (side shield comp.)	1	---- ---	---- ---	---- ---	2577 198-9	⊟2577 198-9
	C3-H (side shield comp.)	1	---- ---	---- ---	---- ---	2577 200-1	
	Right	1	*2577 214	2577 214	2577 214		
	(manual) Left	1	*2577 215	2577 215	2577 215		
	(power) Left	1	*2577 217	2577 217	2577 217		
	Screw (attaching)	★	⊟9415 942	⊟9415 942	⊟9415 942	⊟9415 942	⊟9415 942
	C2, C3 (back of front seat shield)						
	(codes M4B, P4B)	1	---- ---	2714-5 AB8	---- ---	2714-5 AB8	2714-5 AB8
	(codes M4T, P4T)	1	---- ---	2714-5 AT8	---- ---	2714-5 AT8	2714-5 AT8
	(codes M1N, M3X, M4X, P3X, P4X, H3X, M4L, P4L)	1	---- ---	2714-5 AX9	2714-5 AX9	2714-5 AX9	2714-5 AX9
	(codes M4W, P4W)	1	---- ---	2714-5 AW3	---- ---	2714-5 AW3	2714-5 AW3
	(codes M3R, M4R, P3R, P4R)	1	---- ---	⊟2714 AR7	---- ---	⊟2714 AR7	⊟2714 AR7
	(codes M4L, P4L) UP TO Serial No. 221291	1	---- ---	---- ---	---- ---	*2714-5 AX9	*2714-5 AX9
	AFTER Serial No. 221291	1	---- ---	---- ---	---- ---	*2714-5 AY3	*2714-5 AY3
	C3-H (w/ash receiver)						
	(code H4B)	1	---- ---	⊟2730-1 AB4	⊟2730-1 AB4	⊟2730-1 AB4	
	(code H4T)	1	---- ---	---- ---	⊟2730-1 AT6		
	(code H4L)	1	---- ---	⊟2730-1 AY3	---- ---	⊟2730-1 AY3	
	(code H4R)	1	---- ---	⊟2730-1 AR7	⊟2730-1 AR7	⊟2730-1 AR7	
	(code H4X)	1	---- ---	⊟2730-1 AX9	⊟2730-1 AX9	⊟2730-1 AX9	

★ Indicates use as required.
⊟ Indicates parts not listed in any previous parts book.

Printed in U.S.A.
Prices and specifications subject to change without notice.
Right and left part numbers are on same line, first number is right, second number is left.
* Indicates change or addition.

MyMopar.com

CODE	REMARKS	PER CAR	SED.	4D H.T	STA. WGN.	2D H.T	CV. CP.
23-108-98	SHIELD, Front Seat Side - Cont'd						
	Y1-M (side shield complete)						
	Right	1	---- ---	2522522			
	(manual) Left	1	---- ---	2522523			
	(power) Left	1	---- ---	2522527			
	Y1-H (side shield complete)						
	Right	1	---- ---	2522524			
	(power) Left	1	---- ---	2522 525			
	Y1-M (back of front seat)						
	(codes M8B, M9B)	1	---- ---	---- ---	---- ---	2718-9 AB4	2718-9 AB4
	(code M9K)	1	---- ---	---- ---	---- ---	2718-9 AM9	2718-9 AM9
	(code M8G)	1	---- ---	---- ---	---- ---	2724-5 VF9	2724-5 VF9
	(codes M5W, M8N, M9V, M9C, M9W, H8W)	1	---- ---	*2718-9 VW3	---- ---	2724-5 VW3	2724-5 VW3
	(code M9X, M5X, H8X)	1	---- ---	*2718-9 VX8	---- ---	2724-5 VX8	2724-5 VX8
	(codes M5R, M9R, H8R)	1	---- ---	2718-9 AR5	---- ---	2718-9 AR5	2718-9 AR5
	(code M9T)	1	---- ---	2718-9 AL3	---- ---	2718-9 AL3	2718-9 AL3
	Y1-M (cushion)						
	(passengers side)						
	(codes M8B, M9B, M9C)	1	---- ---	---- ---	---- ---	2720-1 AB4	2720-1 AB4
	(codes M5W, M9W, H8W, M8N, M9C, M9V)	1	---- ---	2720-1 VW3	---- ---	2720-1 VW3	2720-1 VW3
	(code M9K)	1	---- ---	---- ---	---- ---	2720-1 AM9	2720-1 AM9
	(code M8G)	1	---- ---	---- ---	---- ---	2720-1 VF9	
	(code M5R, M9R, H8R)	1	---- ---	2720-1 AR5	---- ---	2720-1 AR5	2720-1 AR5
	(codes M5X, M9X, H8X)	1	---- ---	2720-1 VX8	---- ---	2720-1 VX8	2720-1 VX8
	(code M9T)	1	---- ---	---- ---	---- ---	2720-1 AL3	2720-1 AL3
	(drivers side)						
	(codes M8B, M9B, M9C)	1	---- ---	---- ---	---- ---	2722-3 AB4	2722-3 AB4
	(code M8G)	1	---- ---	---- ---	---- ---	2722-3 VF9	
	(code M9K)	1	---- ---	---- ---	---- ---	2722-3 AM9	2722-3 AM9
	(codes M8N, M9C, M9V, M5W, M9W, H8W)	1	---- ---	2722-3 VW3	---- ---	2722-3 VW3	2722-3 VW3
	(code M5R, M9R, H8R)	1	---- ---	---- ---	---- ---	2722-3 AR5	2722-3 AR5
	(code M9T)	1	---- ---	---- ---	---- ---	2722-3 AL3	2722-3 AL3
	(codes M5X, M9X, H8X)	1	---- ---	2722-3 VX8	---- ---	2722-3 VX8	2722-3 VX8
23-108-142	BRACKET, Front Seat Back Side Shield Mounting						
	C1, C2, C3, Y1 (white)	1	2577492-3	2577492-3	2577492-3		
23-109-3	BACK, Rear Seat						
	C1, C3						
	(code L1B)	1	6642 A1B				
	(code L1N)	1	6642 A1N				
	(code L1Q)	1	6642 A1Q				
	(code L1R)	1	6642 A1R				
	(code L1T)	1	6642 A1T				
	(6 window sedan)						
	(code L2B)	1	6674 A2B				
	(code L2L)	1	6674 A2L				
	(code L2N)	1	6674 A2N				
	(code L2Q)	1	6674 A2Q				
	(code L2R)	1	6674 A2R				
	(code L2T)	1	6674 A2T				
	C3-H						
	(spring and cover)						
	(2nd seat)						
	(code H4B)	1	---- ---	6665 A4B	6668 A4B	6665 A4B	
	(code H4L)	1	---- ---	6665 A4L	---- ---	6665 A4L	
	(code H4R)	1	---- ---	6665 A4R	6668 A4R	6665 A4R	

★ Indicates use as required.
⊟ Indicates parts not listed in any previous parts book.
Right and left part numbers are on same line, first number is right, second number is left.
* Indicates change or addition.

MyMopar.com

CODE	REMARKS	PER CAR	SED.	4D H.T	STA. WGN.	2D H.T	CV. CP.
23-109-3	BACK, Rear Seat - Cont'd						
	C3-H (spring and cover) (2nd seat)						
	(code H4T)	1	---- ---	---- ---	6668 A4T		
	(code H4X)	1	---- ---	6665 A4X	6668 A4X	6665 A4X	
	(code H1N)	1	---- ---	---- ---	6667 A1N		
	C3-H (spring and cover) (3rd seat)						
	(code H4B)	1	---- ---	---- ---	7091 A4B		
	(code H4R)	1	---- ---	---- ---	7091 A4R		
	(code H4T)	1	---- ---	---- ---	7091 A4T		
	(code H4X)	1	---- ---	---- ---	7091 A4X		
	(code H1N)	1	---- ---	---- ---	7087 A1N		
	Nut (spring attaching)	4	---- ---	---- ---	6000 234		
	C1-L (2nd seat)						
	(codes L4B, L9B)	1	---- ---	*6645 A4B	*6646 A4B	*6676 A4B	*6648 A4B
	(code L4L)	1	---- ---	6645 A4L	6646 A4L	6676 A4L	6648 A4L
	(code L4N)	1	---- ---	6645 A4N	6646 A4N	6676 A4N	
	(codes L4R, L9R)	1	---- ---	*6645 A4R	*6646 A4R	*6676 A4R	*6648 A4R
	(code L4T)	1	---- ---	---- ---	6646 A4T	---- ---	6648 A4T
	(code L8B)	1	---- ---	6644 A8B	---- ---	6675 A8B	
	(codes L4X, L9X)	1	---- ---	---- ---	*6646 A4X	---- ---	*6648 A4X
	(code L8Q)	1	---- ---	6644 A8Q	---- ---	6675 A8Q	
	(code L8R)	1	---- ---	6644 A8R	---- ---	6675 A8R	
	(code L8T)	1	---- ---	6644 A8T	---- ---	6675 A8T	
	C1-L (3rd seat)						
	(code L4B)	1	---- ---	---- ---	7083 A4B		
	(code L4R)	1	---- ---	---- ---	7083 A4R		
	(code L4T)	1	---- ---	---- ---	7083 A4T		
	(code L4X)	1	---- ---	----	7083 A4X		
	(code L5B)	1	7210 A5B				
	(code L5R)	1	7210 A5R				
	(code L5T)	1	7210 A5T				
	C2 (spring and cover)						
	(codes M3R, P3R)	1	---- ---	---- ---	---- ---	6669 A3R	6673 A3R
	(codes M3X, P3X)	1	---- ---	---- ---	---- ---	6669 A3X	6673 A3X
	(code M1N)	1	---- ---	6649 A1N			
	(codes M4B, P4B)	1	---- ---	6651 A4B	---- ---	6635 A4B	6655 A4B
	(codes M4R, P4R)	1	---- ---	6651 A4R	---- ---	6635 A4R	6655 A4R
	(codes M4T, P4T)	1	---- ---	6651 A4T	---- ---	6635 A4T	6655 A4T
	(codes M4W, P4W)	1	---- ---	6651 A4W	---- ---	6635 A4W	6655 A4W
	(codes M4X, P4X)	1	---- ---	6651 A4X	---- ---	6635 A4X	6655 A4X
	(codes M4L, P4L)	1	---- ---	---- ---	---- ---	6635 A4L	6655 A4L
	C3-H (6 window sedan) (spring and cover)						
	(code H1B)	1	7234 A1B	6660 A1B	---- ---	6660 A1B	
	(code H1L)	1	7234 A1L	6660 A1L	---- ---	6660 A1L	
	(code H1N)	1	7234 A1N	6660 A1N	---- ---	6660 A1N	
	(code H1Q	1	7234 A1Q	6660 A1Q	---- ---	6660 A1Q	
	(code H1R)	1	7234 A1R	6660 A1R	---- ---	6660 A1R	
	(code H1T)	1	7234 A1T	6660 A1T	---- ---	6660 A1T	
	Screw and Washer	2	6023 545	6023 545	---- ---	6023 545	
	Y1-M (spring and cover)						
	(code M3B)	1	---- ---	6683 A3B			
	(code M3C)	1	---- ---	6683 A3C			
	(code M3V)	1	---- ---	6683 A3V			
	(code M3W)	1	---- ---	6683 A3W			
	(code M3K)	1	---- ---	6683 A3K			
	(code M3R)	1	---- ---	6683 A3R			
	(code M3T)	1	---- ---	6683 A3T			

★ Indicates use as required.
⊟ Indicates parts not listed in any previous parts book.

MyMopar.com

CODE	REMARKS	PER CAR	SED.	4D H.T	STA. WGN.	2D H.T	CV. CP.
23-109-3	BACK, Rear Seat - Cont'd						
	Y1-M (spring and cover)						
	(code M3X)	1	---- ---	6683 A3X			
	(code M5R)	1	---- ---	7460 AR5			
	(code M5W)	1	---- ---	7460 AW3			
	(code M5X)	1	---- ---	7460 AX9			
	(code M7B)	1	---- ---	6679 A7B			
	(code M7G)	1	---- ---	6679 A7G			
	(code M7N)	1	---- ---	6679 A7N			
	(code M7P)	1	---- ---	6679 A7P			
	(code M7Q)	1	---- ---	6679 A7Q			
	(code M7R)	1	---- ---	6679 A7R			
	(code M7T)	1	---- ---	6679 A7T			
	Y1-H (spring and cover)						
	(code H3B)	1	---- ---	7313 A3B			
	(codes H3C, H3V, H3W)	1	---- ---	7313 A3W			
	(code H3R)	1	---- ---	7313 A3R			
	(code H3X)	1	---- ---	7313 A3X			
	(code H6A)	1	---- ---	7726 A6A			
	(code H7A)	1	---- ---	6684 A7A			
	(code H7B)	1	---- ---	6684 A7B			
	(code H7G)	1	---- ---	6684 A7G			
	(code H7T)	1	---- ---	6684 A7T			
	Y1-M (spring and cover)						
	(code M8B)	1	---- ---	---- ---	---- ---	6688 A8B	
	(code M8G)	1	---- ---	---- ---	---- ---	6688 A8G	
	(code M8N)	1	---- ---	---- ---	---- ---	6688 A8N	
	(code M9B)	1	---- ---	---- ---	---- ---	6689 A9B	6692 A9B
	(code M9C)	1	---- ---	---- ---	---- ---	6689 A9C	6692 A9C
	(code M9K)	1	---- ---	---- ---	---- ---	6689 A9K	6692 A9K
	(code M9R)	1	---- ---	---- ---	---- ---	6689 A9R	6692 A9R
	(code M9T)	1	---- ---	---- ---	---- ---	6689 A9T	6692 A9T
	(code M9V)	1	---- ---	---- ---	---- ---	6689 A9V	6692 A9V
	(code M9W)	1	---- ---	---- ---	---- ---	6689 A9W	6692 A9W
	(code M9X)	1	---- ---	---- ---	---- ---	6689 A9X	6692 A9X
	Screw and Washer (spring attaching)	3	---- ---	6023 545	---- ---	6023 545	6023 545
	Screw (back to cushion wedge spring adj.)	2	---- ---	6016 005	---- ---	6016 005	6016 005
23-109-4	COVER, Rear Seat Back						
	C1-L						
	(code L1B)	1	6834 A1B				
	(code L1N)	1	6834 A1N				
	(code L1Q)	1	6834 A1Q				
	(code L1R)	1	6834 A1R				
	(code L1T)	1	6834 A1T				
	(6 window sedan)						
	(code L2B)	1	6853 A2B				
	(code L2L)	1	6853 A2L				
	(code L2N)	1	6853 A2N				
	(code L2Q)	1	6853 A2Q				
	(code L2R)	1	6853 A2R				
	(code L2T)	1	6853 A2T				
	C3-H (6 window sedan)						
	(code H1B)	1	7235 A1B				
	(code H1L)	1	7235 A1L				
	(code H1N)	1	7235 A1N				
	(code H1Q)	1	7235 A1Q				
	(code H1R)	1	7235 A1R				
	(code H1T)	1	7235 A1T				

★ Indicates use as required.
⊟ Indicates parts not listed in any previous parts book.
Right and left part numbers are on same line, first number is right, second number is left.
• Indicates change or addition.

MyMopar.com

Printed in U.S.A.
Prices and specifications subject to change without notice.
May 1965, Supersedes Sept. 4, 1964.

CODE	REMARKS	PER CAR	SED.	4D H.T	STA. WGN.	2D H.T	CV. CP.
23-109-4	COVER, Rear Seat Back - Cont'd						
	C1-L						
	(code L5B)	1	7211 A5B				
	(code L5R)	1	7211 A5R				
	(code L5T)	1	7211 A5T				
	(code L4B)	1	---- ---	6836 A4B			
	(code L4L)	1	---- ---	6836 A4L			
	(code L4N)	1	---- ---	6836 A4N			
	(code L4R)	1	---- ---	6836 A4R			
	(code L8B)	1	---- ---	6835 A8B			
	(code L8Q)	1	---- ---	6835 A8Q			
	(code L8R)	1	---- ---	6835 A8R			
	(code L8T)	1	---- ---	6835 A8T			
	C2, C3						
	(code M1N)	1	---- ---	6839 A1N			
	(code M4B)	1	---- ---	6840 A4B			
	(code M4R)	1	---- ---	6840 A4R			
	(code M4T)	1	---- ---	6840 A4T			
	(code M4W)	1	---- ---	6840 A4W			
	(code M4X)	1	---- ---	6840 A4X			
	(code H1B)	1	---- ---	6844 A1B	---- ---	6844 A1B	
	(code H1L)	1	---- ---	6844 A1L	---- ---	6844 A1L	
	(code H1N)	1	---- ---	6844 A1N	---- ---	6844 A1N	
	(code H1Q)	1	---- ---	6844 A1Q	---- ---	6844 A1Q	
	(code H1R)	1	---- ---	6844 A1R	---- ---	6844 A1R	
	(code H1T)	1	---- ---	6844 A1T	---- ---	6844 A1T	
	(code H4B)	1	---- ---	6848 A4B	---- ---	6848 A4B	
	(code H4L)	1	---- ---	6848 A4L	---- ---	6848 A4L	
	(code H4R)	1	---- ---	6848 A4R	---- ---	6848 A4R	
	(code H4X)	1	---- ---	6848 A4X	---- ---	6848 A4X	
	C1, C3						
	(2nd seat back)						
	(code L4B)	1	---- ---	---- ---	6837 A4B		
	(code L4R)	1	---- ---	---- ---	6837 A4R		
	(code L4T)	1	---- ---	---- ---	6837 A4T		
	(code L4X)	1	---- ---	---- ---	6837 A4X		
	(code H1N)	1	---- ---	---- ---	6849 A1N		
	(code H4B)	1	---- ---	---- ---	6850 A4B		
	(code H4R)	1	---- ---	---- ---	6850 A4R		
	(code H4T)	1	---- ---	---- ---	6850 A4T		
	(code H4X)	1	---- ---	---- ---	6850 A4X		
	(3rd seat back)						
	(code L4B)	1	---- ---	---- ---	7084 A4B		
	(code L4R)	1	---- ---	---- ---	7084 A4R		
	(code L4T)	1	---- ---	---- ---	7084 A4T		
	(code L4X)	1	---- ---	---- ---	7084 A4X		
	(code H1N)	1	---- ---	---- ---	7088 A1N		
	(code H4B)	1	---- ---	---- ---	7092 A4B		
	(code H4R)	1	---- ---	---- ---	7092 A4R		
	(code H4T)	1	---- ---	---- ---	7092 A4T		
	(code H4X)	1	---- ---	---- ---	7092 A4X		
	C1-L						
	(codes L4B, L9B)	1	---- ---	---- ---	---- ---	*6855 A4B	*6838 A4B
	(code L4L)	1	---- ---	---- ---	---- ---	6855 A4L	6838 A4L
	(code L4N)	1	---- ---	---- ---	---- ---	⊟6855 A4N	
	(codes L4R, L9R)	1	---- ---	---- ---	---- ---	*6855 A4R	*6838 A4R
	(code L4T)	1	---- ---	---- ---	---- ---	---- ---	6838 A4T
	(codes L4X, L9X)	1	---- ---	---- ---	---- ---	⊟6855 A9X	*6838 A4X
	(code L8B)	1	---- ---	---- ---	---- ---	6854 A8B	
	(code L8Q)	1	---- ---	---- ---	---- ---	6854 A8Q	
	(code L8R)	1	---- ---	---- ---	---- ---	6854 A8R	
	(code L8T)	1	---- ---	---- ---	---- ---	6854 A8T	

★ Indicates use as required.
⊟ Indicates parts not listed in any previous parts book.
May 1965, Supersedes Sept. 4, 1964.

Printed in U.S.A.
Prices and specifications subject to change without notice.
Right and left part numbers are on same line, first number is right, second number is left.
* Indicates change or addition.

MyMopar.com

CODE	REMARKS	PER CAR	SED.	4D H.T	STA. WGN.	2D H.T	CV. CP.
23-109-4	COVER, Rear Seat Back - Cont'd						
	C2						
	(codes M3R, P3R)	1	---- ---	---- ---	---- ---	6851 A3R	6852 A3R
	(codes M3X, P3X)	1	---- ---	---- ---	---- ---	6851 A3X	6852 A3X
	(codes M4B, P4B)	1	---- ---	---- ---	---- ---	6856 A4B	6841 A4B
	(codes M4R, P4R)	1	---- ---	---- ---	---- ---	6856 A4R	6841 A4R
	(codes M4T, P4T)	1	---- ---	---- ---	---- ---	6856 A4T	6841 A4T
	(codes M4X, P4X)	1	---- ---	---- ---	---- ---	6856 A4X	6841 A4X
	(codes M4L, P4L)	1	---- ---	---- ---	---- ---	6856 A4L	6841 A4L
	(codes M4W, P4W)	1	---- ---	---- ---	---- ---	6856 A4W	6841 A4W
	Y1-M						
	(code M3B)	1	---- ---	6870 A3B			
	(code M3K)	1	---- ---	6870 A3K			
	(code M3R)	1	---- ---	6870 A3R			
	(code M3T)	1	---- ---	6870 A3T			
	(code M3V)	1	---- ---	6870 A3V			
	(codes M3W, M3C)	1	---- ---	*6870 A3W			
	(code M3X)	1	---- ---	6870 A3X			
	(code M5R)	1	---- ---	7461 AR5			
	(code M5W)	1	---- ---	7461 AW3			
	(code M5X)	1	---- ---	7461 AX9			
	(code M7B)	1	---- ---	6866 A7B			
	(code M7G)	1	---- ---	6866 A7G			
	(code M7N)	1	---- ---	6866 A7N			
	(code M7P)	1	---- ---	6866 A7P			
	(code M7Q)	1	---- ---	6866 A7Q			
	(code M7R)	1	---- ---	6866 A7R			
	(code M7T)	1	---- ---	6866 A7T			
	Y1-H						
	(code H3B)	1	---- ---	7312 A3B			
	(codes H3C, H3V, H3W)	1	---- ---	7312 A3W			
	(code H3R)	1	---- ---	7312 A3R			
	(code H3X)	1	---- ---	7312 A3X			
	(code H6A)	1	---- ---	7725 A6A			
	(code H7A)	1	---- ---	6872 A7A			
	(code H7B)	1	---- ---	6872 A7B			
	(code H7G)	1	---- ---	6872 A7G			
	(code H7T)	1	---- ---	6872 A7T			
	(code H8R)	1	---- ---	7461 AR5			
	(code H8W)	1	---- ---	7461 AW3			
	(code H8X)	1	---- ---	7461 AX9			
	Y1-M						
	(code M8B)	1	---- ---	---- ---	---- ---	6874-5 A8B	
	(code M8G)	1	---- ---	---- ---	---- ---	6874-5 A8G	
	(code M8N)	1	---- ---	---- ---	---- ---	6874-5 A8N	
	(code M9B)	1	---- ---	---- ---	---- ---	6876-7 A9B	6878-9 A9B
	(codes M9C, M9V, M9W)	1	---- ---	---- ---	---- ---	6876-7 A9W	6878-9 A9W
	(code M9K)	1	---- ---	---- ---	---- ---	6876-7 A9K	6878-9 A9K
	(code M9R)	1	---- ---	---- ---	---- ---	6876-7 A9R	6878-9 A9R
	(code M9T)	1	---- ---	---- ---	---- ---	6876-7 A9T	6878-9 A9T
	(code M9X)	1	---- ---	---- ---	---- ---	6876-7 A9X	6878-9 A9X
23-109-5	INSERT, Rear Seat Back Panel						
	C1-L (2nd seat) (vinoleum)						
	(code L4B)	1	---- ---	---- ---	1816 AB8		
	(code L4R)	1	---- ---	---- ---	1816 AR7		
	(code L4T)	1	---- ---	---- ---	1816 AT8		
	(code L4X)	1	---- ---	---- ---	1816 AX9		
	(2nd seat back support panel)						
	(inner) (5 in. wide) (vinoleum)						
	(code L4B)	1	---- ---	---- ---	1825 AB8		

● Indicates use as required.
⊟ Indicates parts not listed in any previous parts book.
Right and left part numbers are on same line, first number is right, second number is left.
* Indicates change or addition.

MyMopar.com

Printed in U.S.A.
Prices and specifications subject to change without notice.
May 1965, Supersedes Sept. 4, 1964.

CODE	REMARKS	PER CAR	SED.	4D H.T	STA. WGN.	2D H.T	CV. CP.
23-109-5	INSERT, Rear Seat Back Panel - Cont'd						
	C1-L (2nd. seat) (vinoleum)						
	(code L4R)	1	---- ---	---- ---	*1825 AR7		
	(code L4T)	1	---- ---	---- ---	1825 AT8		
	(code L4X)	1	---- ---	---- ---	1825 AX9		
	(2nd seat back support panel) (outer) (12 3/8" wide) (vinoleum)						
	(code L4B)	1	---- ---	---- ---	1821 AB8		
	(code L4R)	1	---- ---	---- ---	*1821 AR7		
	(code L4T)	1	---- ---	---- ---	1821 AT8		
	(code L4X)	1	---- ---	---- ---	1821 AX9		
	(3rd seat back) (vinoleum)						
	(code L4B)	1	---- ---	---- ---	1815 AB8		
	(code L4R)	1	---- ---	---- ---	1815 AR7		
	(code L4T)	1	---- ---	---- ---	1815 AT8		
	(code L4X)	1	---- ---	---- ---	1815 AX9		
	(3rd seat back support) (vinoleum)						
	(code L4B)	1	---- ---	---- ---	1822 AB8		
	(code L4R)	1	---- ---	---- ---	1822 AR8		
	(code L4T)	1	---- ---	---- ---	1822 AT8		
	(code L4X)	1	---- ---	---- ---	1822 AX9		
	C3-H (2nd seat back) (carpet and moulding)						
	(code H4B)	1	---- ---	---- ---	1808 AB8		
	(code H4R)	1	---- ---	---- ---	1808 AR8		
	(code H4T)	1	---- ---	---- ---	1808 AT8		
	(codes H4X, H1N)	1	---- ---	---- ---	1808 AX8		
	(support panel carpet and moulding) (14 3/8" wide)						
	(code H4B)	1	---- ---	---- ---	1807 AB8		
	(code H4R)	1	---- ---	---- ---	1807 AR8		
	(code H4T)	1	---- ---	---- ---	1807 AT8		
	(codes H4X, H1N)	1	---- ---	---- ---	1807 AX8		
	(support panel carpet insert) (5" wide)						
	(code H4B)	1	---- ---	---- ---	1826 AB8		
	(code H4R)	1	---- ---	---- ---	1826 AR8		
	(code H4T)	1	---- ---	---- ---	1826 AT8		
	(codes H4X, H1N)	1	---- ---	---- ---	1826 AX8		
	(3rd seat) (carpet and moulding)						
	(code H4B)	1	---- ---	---- ---	1811 AB8		
	(code H4R)	1	---- ---	---- ---	1811 AR8		
	(code H4T)	1	---- ---	---- ---	1811 AT8		
	(codes H4X, H1N)	1	---- ---	---- ---	1811 AX8		
	(support panel carpet and moulding insert)						
	(code H4B)	1	---- ---	---- ---	1812 AB8		
	(code H4R)	1	---- ---	---- ---	1812 AR8		
	(code H4T)	1	---- ---	---- ---	1812 AT8		
	(codes H4X, H1N)	1	---- ---	---- ---	1812 AX8		
	Screw (2nd seat back panel insert) (2nd seat back support panel)(3rd seat back panel) (3rd seat back support panel) (center and rear floor pan cover) (tailgate sill to tailgate cover)	★	---- ---	---- ---	*6024 678		
	Y1-M (panel)						
	(code M9B)	1	---- ---	---- ---	---- ---	---- ---	6687 AB4
	(codes M9C, M9V, M9W)	1	---- ---	---- ---	---- ---	---- ---	6687 AW3

★ Indicates use as required.
B Indicates parts not listed in any previous parts book.
May 1965, Supersedes Sept. 4, 1964.

Printed in U.S.A.
Prices and specifications subject to change without notice.
Right and left part numbers are on same line, first number is right, second number is left.
* Indicates change or addition.

MyMopar.com

CODE	REMARKS	PER CAR	SED.	4D H.T	STA. WGN.	2D H.T	CV. CP.
23-109-5	INSERT, Rear Seat Back Panel - Cont'd						
	Y1-M (panel)						
	(code M9K)	1	---- ---	---- ---	---- ---	---- ---	6687 AM9
	(code M9R)	1	---- ---	---- ---	---- ---	---- ---	6687 AR5
	(code M9T)	1	---- ---	---- ---	---- ---	---- ---	6687 AL3
	(code M9X)	1	---- ---	---- ---	---- ---	---- ---	6687 AX9
23-109-6	FOUNDATION, Back of Rear Seat Back						
	C1, C2 (paint as required)	1	---- ---	---- ---	---- ---	---- ---	4472 AX9
	(less radio speaker)	1	---- ---	---- ---	---- ---	---- ---	4473 AX9
23-109-10	FILLER and BRACKET, Rear Seat Back Cushion						
	C2, C3 (paint as required) (black)	1	---- ---	---- ---	---- ---	4462-3 AX9	
23-109-11	SHROUD, Rear Seat Back						
	C3-H (w/brackets)	1	---- ---	4490 AX9	---- ---	4490 AX9	
	C2 (w/brackets)	1	---- ---	4490 AX9	---- ---	4491 AX9	
	Fastener (bracket to body)	1	---- ---	6000 365	---- ---	6000 365	
	Y1-M						
	(codes M8B, M9B, M9C)	1	---- ---	---- ---	---- ---	4365 AB4	4366 AB4
	(code M9K)	1	---- ---	---- ---	---- ---	4365 AM9	4366 AM9
	(codes M9R, M9V)	1	---- ---	---- ---	---- ---	4365 AR5	4366 AR5
	(code M9T)	1	---- ---	---- ---	---- ---	4365 AL3	4366 AL3
	(code M8E)	1	---- ---	---- ---	---- ---	*4365 VF9	
	(codes M8N, M9W, M9X)	1	---- ---	---- ---	---- ---	*4365 VX8	
	Screw (shroud to shelf panel)	4	---- ---	---- ---	---- ---	6023 381	
	Screw (center attaching)	2	---- ---	---- ---	---- ---	---- ----	6023 381
	Nut (attaching)	2	---- ---	---- ---	---- ---	6022 297	
	Fastener	6	---- ---	---- ---	---- ---	6000 365	6000 365
	Stud (base)	2	---- ---	6023 003	---- ---	6023 003	
23-109-12	EXTENSION, Rear Seat Shroud Side Filler						
	C2 (paint as required)	1	---- ---	4488-9 AX9	---- ---	4484-5 AX9	
	C3-H (paint as required)	1	---- ---	4488-9 AX9	---- ---	*4608-9 AX9	
	Screw and Washer	2	---- ---	6025 583	---- ---	6025 583	
	NUT	2	---- ---	*6025 550	---- ---	*6025 550	
23-109-14	NAME PLATE, Rear Seat Shroud						
	C3-H	2	---- ---	2571 615	---- ---	2571 615	
	Nut (attaching)	2	---- ---	6023 215	---- ---	6023 215	
23-109-15	BASE, Rear Seat Shroud Medallion						
	C2, C3	1	---- ---	2572 418	---- ---	---- ---	2572 418
23-109-16	COVER, Rear Speaker						
	Y1-M						
	(code M9B)	1	---- ---	---- ---	---- ---	---- ---	4967 AB4
	(codes M9C, M9V, M9W)	1	---- ---	---- ---	---- ---	---- ---	4967 AW3
	(code M9K)	1	---- ---	---- ---	---- ---	---- ---	4967 AM9
	(code M9R)	1	---- ---	---- ---	---- ---	---- ---	4967 AR5
	(code M9T)	1	---- ---	---- ---	---- ---	---- ---	4967 AL3
	(code M9X)	1	---- ---	---- ---	---- ---	---- ---	4967 AX9
23-109-35	CUSHION, Rear Seat						
	C1-L (w/o airfoam pad)						
	(code L1B)	1	6346 A1B				
	(code L1N)	1	6346 A1N				
	(code L1Q)	1	6346 A1Q				
	(code L1R)	1	6346 A1R				
	(code L1T)	1	6346 A1T				

★ Indicates use as required.
⊟ Indicates parts not listed in any previous parts book.
Right and left part numbers are on same line, first number is right, second number is left.
* Indicates change or addition.

MyMopar.com

Printed in U.S.A.
Prices and specifications subject to change without notice.
April 1966, Supersedes May 1965.

CODE	REMARKS	PER CAR	SED.	4D H.T	STA. WGN.	2D H.T	CV. CP.
23-109-35	CUSHION, Rear Seat - Cont'd						
	C1-L (w/airfoam pad)						
	(code L1B)	1	6347 A1B				
	(code L1N)	1	6347 A1N				
	(code L1Q)	1	6347 A1Q				
	(code L1R)	1	6347 A1R				
	(code L1T)	1	6347 A1T				
	(6 window sedan w/airfoam pad)						
	(code L2B)	1	⊟6376 A2B				
	(code L2L)	1	⊟6376 A2L				
	(code L2N)	1	⊟6376 A2N				
	(code L2Q)	1	⊟6376 A2Q				
	(code L2R)	1	⊟6376 A2R				
	(code L2T)	1	⊟6376 A2T				
	C1-L						
	(6 window sedan w/o airfoam pad)						
	(code L2B)	1	6375 A2B				
	(code L2L)	1	6375 A2L				
	(code L2N)	1	6375 A2N				
	(code L2Q)	1	6375 A2Q				
	(code L2R)	1	6375 A2R				
	(code L2T)	1	6375 A2T				
	C1-L						
	(code L5B)	1	7212 A5B				
	(code L5R)	1	7212 A5R				
	(code L5T)	1	7212 A5T				
	(w/o airfoam pad)						
	(code L8B)	1	---- ---	6350 A8B	---- ---	6354 A8B	
	(code L8Q)	1	---- ---	6350 A8Q	---- ---	6354 A8Q	
	(code L8R)	1	---- ---	6350 A8R	---- ---	6354 A8R	
	(code L8T)	1	---- ---	6350 A8T	---- ---	6354 A8T	
	(w/airfoam pad)						
	(code L8B)	1	---- ---	6351 A8B	---- ---	6355 A8B	
	(code L8Q)	1	---- ---	6351 A8Q	---- ---	6355 A8Q	
	(code L8R)	1	---- ---	6351 A8R	---- ---	6355 A8R	
	(code L8T)	1	---- ---	6351 A8T	---- ---	6355 A8T	
	C3-H						
	(6 window sedan)						
	(code H1B)	1	7239 A1B	6366 A1B	---- ---	7251 A1B	
	(code H1L)	1	7239 A1L	6366 A1L	---- ---	7251 A1L	
	(code H1N)	1	7239 A1N	6366 A1N	---- ---	7251 A1N	
	(code H1Q)	1	7239 A1Q	6366 A1Q	---- ---	7251 A1Q	
	(code H1R)	1	7239 A1R	6366 A1R	---- ---	7251 A1R	
	(code H1T)	1	7239 A1T	6366 A1T	---- ---	7251 A1T	
	C3-H						
	(2nd seat)						
	(code H4B)	1	---- ---	6369 A4B	6371 A4B	7280 A4B	
	(code H4R)	1	---- ---	6369 A4R	6371 A4R	7280 A4R	
	(code H4L)	1	---- ---	6369 A4L	---- ---	7280 A4L	
	(code H4T)	1	---- ---	---- ---	6371 A4T		
	(code H4X)	1	---- ---	6369 A4X	6371 A4X	7280 A4X	
	(code H1N)	1	---- ---	---- ---	6370 A1N		
	(3rd seat) (spring and cover)						
	(code H4B)	1	---- ---	---- ---	7089 A4B		
	(code H4R)	1	---- ---	---- ---	7089 A4R		
	(code H4T)	1	---- ---	---- ---	7089 A4T		
	(code H4X)	1	---- ---	---- ---	7089 A4X		
	(code H1N)	1	---- ---	---- ---	7085 A1N		

★ Indicates use as required.
⊟ Indicates parts not listed in any previous parts book.
May 1965, Supersedes Sept. 4, 1964.

MyMopar.com

Printed in U.S.A.
Prices and specifications subject to change without notice.
Right and left part numbers are on same line, first number is right, second number is left.
* Indicates change or addition.

CODE	REMARKS	PER CAR	SED.	4D H.T	STA. WGN.	2D H.T	CV. CP.
23-109-35	CUSHION, Rear Seat - Cont'd						
	C1-L						
	(2nd seat)						
	(code L4B)	1	---- ---	---- ---	*6353 A4B		
	(code L4R)	1	---- ---	---- ---	*6353 A4R		
	(code L4T)	1	---- ---	---- ---	*6353 A4T		
	(code L4X)	1	---- ---	---- ---	*6353 A4X		
	(3rd seat)						
	(codes L4B, L9B)	1	---- ---	6352 A4B	7081 A4B	6356 A4B	6357 A4B
	(code L4L)	1	---- ---	6352 A4L	---- ---	6356 A4L	6357 A4L
	(code L4N)	1	---- ---	6352 A4N	---- ---	6356 A4N	
	(codes L4R, L9R)	1	---- ---	6352 A4R	7081 A4R	6356 A4R	6357 A4R
	(code L4T)	1	---- ---	---- ---	7081 A4T	---- ---	6357 A4T
	(codes L4X, L9X)	1	---- ---	---- ---	7081 A4X	---- ---	6357 A4X
	C2-M						
	(code M1N)	1	---- ---	6358 A1N			
	(code M4B)	1	---- ---	6359 A4B			
	(code M4R)	1	---- ---	6359 A4R			
	(code M4T)	1	---- ---	6359 A4T			
	(code M4X)	1	---- ---	6359 A4X			
	C2						
	(codes M3R, P3R)	1	---- ---	---- ---	---- ---	6373 A3R	6374 A3R
	(codes M3X, P3X)	1	---- ---	---- ---	---- ---	6373 A3X	6374 A3X
	(codes M4B, P4B)	1	---- ---	---- ---	---- ---	6360 A4B	6374 A4B
	(codes M4R, P4R)	1	---- ---	---- ---	---- ---	6360 A4R	6374 A4R
	(codes M4T, P4T)	1	---- ---	---- ---	---- ---	6360 A4T	6374 A4T
	(codes M4W, P4W)	1	---- ---	---- ---	---- ---	6360 A4W	6374 A4W
	(codes M4X, P4X)	1	---- ---	---- ---	---- ---	6360 A4X	6374 A4X
	(codes M4L, P4L)	1	---- ---	---- ---	---- ---	6360 A4L	6374 A4L
	Y1-M						
	(code M3B)	1	---- ---	6383 A3B			
	(code M3C)	1	---- ---	6383 A3C			
	(code M3K)	1	---- ---	6383 A3K			
	(code M3R)	1	---- ---	6383 A3R			
	(code M3T)	1	---- ---	6383 A3T			
	(code M3V)	1	---- ---	6383 A3V			
	(code M3W)	1	---- ---	6383 A3W			
	(code M3X)	1	---- ---	6383 A3X			
	(code M5R)	1	---- ---	7465 AR5			
	(code M5W)	1	---- ---	7465 AW3			
	(code M5X)	1	---- ---	7465 AX9			
	(code M7B)	1	---- ---	6382 A7B			
	(code M7G)	1	---- ---	6382 A7G			
	(code M7N)	1	---- ---	6382 A7N			
	(code M7P)	1	---- ---	6382 A7P			
	(code M7Q)	1	---- ---	6382 A7Q			
	(code M7R)	1	---- ---	6382 A7R			
	(code M7T)	1	---- ---	6382 A7T			
	Y1-H						
	(code H3B)	1	---- ---	7311 A3B			
	(codes H3C, H3V, H3W)	1	---- ---	7311 A3W			
	(code H3R)	1	---- ---	7311 A3R			
	(code H3X)	1	---- ---	7311 A3X			
	(code H6A)	1	---- ---	7724 A6A			
	(code H7A)	1	---- ---	6384 A7A			
	(code H7B)	1	---- ---	6384 A7B			
	(code H7G)	1	---- ---	6384 A7G			
	(code H7T)	1	---- ---	6384 A7T			
	(code H8R)	1	---- ---	7465 AR5			
	(code H8W)	1	---- ---	7465 AW3			
	(code H8X)	1	---- ---	7465 AX9			
	(code M8B)	1	---- ---	---- ---	---- ---	6385 A8B	

★ Indicates use as required.
B Indicates parts not listed in any previous parts book.
Right and left part numbers are on same line, first number is right, second number is left.
* Indicates change or addition.

MyMopar.com

Printed in U.S.A.
Prices and specifications subject to change without notice.
April 1966, Supersedes May 1965.

CODE	REMARKS	PER CAR	SED.	4D H.T	STA. WGN.	2D H.T	CV. CP.
23-109-35	CUSHION, Rear Seat - Cont'd						
	Y1-M						
	(code M8G)	1	---- ---	---- ---	---- ---	6385 A8G	
	(code M8N)	1	---- ---	---- ---	---- ---	6385 A8N	
	(code M9B)	1	---- ---	---- ---	---- ---	6386 A9B	6387 A9B
	(code M9C)	1	---- ---	---- ---	---- ---	6386 A9W	6387 A9W
	(code M9K)	1	---- ---	---- ---	---- ---	6386 A9K	6387 A9K
	(code M9R)	1	---- ---	---- ---	---- ---	6386 A9R	6387 A9R
	(code M9T)	1	---- ---	---- ---	---- ---	6386 A9T	6387 A9T
	(code M9V)	1	---- ---	---- ---	---- ---	6386 A9W	6387 A9W
	(code M9W)	1	---- ---	---- ---	---- ---	6386 A9W	6387 A9W
	(code M9X)	1	---- ---	---- ---	---- ---	6386 A9X	6387 A9X
23-109-36	COVER, Rear Seat Cushion						
	C1-L						
	(code L1B)	1	6464 A1B				
	(code L1N)	1	6464 A1N				
	C1-L						
	(code L1Q)	1	6464 A1Q				
	(code L1R)	1	6464 A1R				
	(code L1T)	1	6464 A1T				
	(6 window sedan)						
	(code L2B)	1	6485 A2B				
	(code L2L)	1	6485 A2L				
	(code L2N)	1	6485 A2N				
	(code L2Q)	1	6485 A2Q				
	(code L2R)	1	6485 A2R				
	(code L2T)	1	6485 A2T				
	C1-L						
	(code L5B)	1	7213 A5B				
	(code L5R)	1	7213 A5R				
	(code L5T)	1	7213 A5T				
	C1-L (2nd seat)						
	(code L4B, L9B)	1	---- ---	6467 A4B	6468 A4B	6470 A4B	6471 A4B
	(code L4L)	1	---- ---	6467 A4L	---- ---	6470 A4L	6471 A4L
	(code L4N)	1	---- ---	6467 A4N	---- ---	6470 A4N	
	(codes L4R, L9R)	1	---- ---	6467 A4R	6468 A4R	6470 A4R	6471 A4R
	(code L4T)	1	---- ---	---- ---	6468 A4T	---- ---	6471 A4T
	(codes L4X, L9X)	1	---- ---	---- ---	6468 A4X	6470 A9X	6471 A4X
	(3rd seat)						
	(code L4B)	1	---- ---	---- ---	7082 A4B		
	(code L4R)	1	---- ---	---- ---	7082 A4R		
	(code L4T)	1	---- ---	---- ---	7082 A4T		
	(code L4X)	1	---- ---	---- ---	7082 A4X		
	(code L8B)	1	---- ---	6466 A8B	---- ---	6469 A8B	
	(code L8Q)	1	---- ---	6466 A8Q	---- ---	6469 A8Q	
	(code L8R)	1	---- ---	6466 A8R	---- ---	6469 A8R	
	(code L8T)	1	---- ---	6466 A8T	---- ---	6469 A8T	
	C2						
	(code M1N)	1	---- ---	6472 A1N			
	(codes M3R, P3R)	1	---- ---	---- ---	---- ---	6486 A3R	6475 A3R
	(codes M3X, P3X)	1	---- ---	---- ---	---- ---	6486 A3X	6475 A3X
	(codes M4B, P4B)	1	---- ---	6473 A4B	---- ---	6474 A4B	6487 A4B
	(codes M4R, P4R)	1	---- ---	6473 A4R	---- ---	6474 A4R	6487 A4R
	(codes M4T, P4T)	1	---- ---	6473 A4T	---- ---	6474 A4T	6487 A4T
	(codes M4W, P4W)	1	---- ---	6473 A4W	---- ---	6474 A4W	6487 A4W
	(codes M4X, P4X)	1	---- ---	6473 A4X	---- ---	6474 A4X	6487 A4X
	(codes M4L, P4L)	1	---- ---	---- ---	---- ---	6474 A4L	6487 A4L
	C3-H						
	(6 window sedan)						
	(code H1B)	1	7240 A1B	6478 A1B	---- ---	7252 A1B	
	(code H1L)	1	7240 A1L	6478 A1L	---- ---	7252 A1L	

★ Indicates use as required.
B Indicates parts not listed in any previous parts book.
April 1966, Supersedes May 1965.

Printed in U.S.A.
Prices and specifications subject to change without notice.
Right and left part numbers are on same line, first number is right, second number is left.
* Indicates change or addition.

MyMopar.com

CODE	REMARKS	PER CAR	SED.	4D H.T	STA. WGN.	2D H.T	CV. CP.
23-109-36	COVER, Rear Seat Cushion - Cont'd						
	C3-H (6 window sedan)						
	(code H1N)	1	7240 A1N	6478 A1N	---- ---	7252 A1N	
	(code H1Q)	1	7240 A1Q	6478 A1Q	---- ---	7252 A1Q	
	(code H1R)	1	7240 A1R	6478 A1R	---- ---	7252 A1R	
	(code H1T	1	7240 A1T	6478 A1T	---- ---	7252 A1T	
	(2nd seat)						
	(code H1N)	1	---- ---	---- ---	6482 A1N		
	(code H4B)	1	---- ---	6481 A4B	6483 A4B	7281 A4B	
	(code H4R)	1	---- ---	6481 A4R	6483 A4R	7281 A4R	
	(code H4L)	1	---- ---	6481 A4L	---- ---	7281 A4L	
	(code H4T)	1	---- ---	---- ---	6483 A4T		
	(code H4X)	1	---- ---	6481 A4X	6483 A4X	7281 A4X	
	(3rd seat)						
	(code H4B)	1	---- ---	---- ---	7090 A4B		
	(code H1N)	1	---- ---	---- ---	7086 A1N		
	(code H4R)	1	---- ---	---- ---	7090 A4R		
	C3-H (3rd seat)						
	(code H4T)	1	---- ---	---- ---	7090 A4T		
	(code H4X)	1	---- ---	---- ---	7090 A4X		
	Screw and Washer (2nd seat cushion to floor)	2	---- ---	---- ---	6023 545		
	Y1-M						
	(code M3B)	1	---- ---	6492 A3B			
	(codes M3C, M3V, M3W)	1	---- ---	6492 A3W			
	(code M3K)	1	---- ---	6492 A3K			
	(code M3R)	1	---- ---	6492 A3R			
	(code M3T)	1	---- ---	6492 A3T			
	(code M3X)	1	---- ---	6492 A3X			
	(code M5R	1	---- ---	*7466 AR5			
	(code M5W)	1	---- ---	*7466 AW3			
	(code M5X)	1	---- ---	*7466 AX9			
	(code M7B)	1	---- ---	6491 A7B			
	(code M7G)	1	---- ---	6491 A7G			
	(code M7N)	1	---- ---	6491 A7N			
	(code M7P)	1	---- ---	6491 A7P			
	(code M7Q)	1	---- ---	6491 A7Q			
	(code M7R)	1	---- ---	6491 A7R			
	(code M7T)	1	---- ---	6491 A7T			
	(code M8B)	1	---- ---	---- ---	---- ---	6494 A8B	
	(code M8G)	1	---- ---	---- ---	---- ---	6494 A8G	
	(code M8N)	1	---- ---	---- ---	---- ---	6494 A8N	
	(code M9B)	1	---- ---	---- ---	---- ---	6495 A9B	6496 A9B
	(codes M9C, M9V, M9W)	1	---- ---	---- ---	---- ---	6495 A9W	6496 A9W
	(code M9K)	1	---- ---	---- ---	---- ---	6495 A9K	6496 A9K
	(code M9R)	1	---- ---	---- ---	---- ---	6495 A9R	6496 A9R
	(code M9T)	1	---- ---	---- ---	---- ---	6495 A9T	6496 A9T
	(code M9X)	1	---- ---	---- ---	---- ---	6495 A9X	6496 A9X
	Y1-H						
	(code H3B)	1	---- ---	7310 A3B			
	(codes H3C, H3V, H3W)	1	---- ---	7310 A3W			
	(code H3R)	1	---- ---	7310 A3R			
	(code H3X)	1	---- ---	7310 A3X			
	(code H6A)	1	---- ---	7723 A6A			
	(code H7A)	1	---- ---	6493 A7A			
	(code H7B)	1	---- ---	6493 A7B			
	(code H7G)	1	---- ---	6493 A7G			
	(code H7T)	1	---- ---	6493 A7T			
	(code H8R)	1	---- ---	7466 AR5			
	(code H8W)	1	---- ---	7466 AW3			
	(code H8X)	1	---- ---	7466 AX9			

★ Indicates use as required.
⊟ Indicates parts not listed in any previous parts book.
Right and left part numbers are on same line, first number is right, second number is left.
* Indicates change or addition.

MyMopar.com

CODE	REMARKS	PER CAR	SED.	4D H.T	STA. WGN.	2D H.T	CV. CP.
23-109-38	RETAINER, Center Floor Pan Rear Seat Cushion						
	C1, C2, C3, Y1	2	1810037	1810037	1810037	1810037	1810037
	(rear floor pan 3rd seat cushion)						
	(front)	2	---- ---	---- ---	2577071		
	(rear)	2	---- ---	---- ---	2482956		
23-111-10	STRIP, Front Pillar Tacking						
	Y1 (upper)	2	---- ---	1878174	---- ---	1878174	
23-111-30	STRIP, Folding Top Header						
	Y1 (front)	1	---- ---	---- ---	---- ---	---- ---	1750628
	(side)	2	---- ---	---- ---	---- ---	---- ---	1691923
23-111-37	STRIP, Folding Top Bow Tacking						
	C1, C2, Y1 (No. 1 bow)	1	---- ---	---- ---	---- ---	---- ---	2424591
	(No. 2 bow)	2	---- ---	---- ---	---- ---	---- ---	2528254
	(center) (No. 3 bow)	1	---- ---	---- ---	---- ---	---- ---	2528264
	(rear bow)	1	---- ---	---- ---	---- ---	---- ---	2424607
23-112-12	BOOT, Folding Top Dust						
	C1, C2						
	(code L4B)	1	---- ---	---- ---	---- ---	---- ---	1939 AB4
	(codes M4B, P4B)	1	---- ---	---- ---	---- ---	---- ---	1939 AB8
	(codes L4L, M4L, P4L)	1	---- ---	---- ---	---- ---	---- ---	1939 AY3
	(codes L4R, M4R, P4R, M3R, P3R)	1	---- ---	---- ---	---- ---	---- ---	1939 AR7
	(code L4T)	1	---- ---	---- ---	---- ---	---- ---	1939 AT6
	(codes L4X, M4X, P4X)	1	---- ---	---- ---	---- ---	---- ---	1939 AX9
	(codes M4T, P4T)	1	---- ---	---- ---	---- ---	---- ---	1939 AT8
	(codes M4W, P4W)	1	---- ---	---- ---	---- ---	---- ---	*1939 AW3
	Y1-M						
	(center)						
	(code M9B)	1	---- ---	---- ---	---- ---	---- ---	1955 AB4
	(codes M9C, M9V, M9W)	1	---- ---	---- ---	---- ---	---- ---	1955 AW3
	(code M9K)	1	---- ---	---- ---	---- ---	---- ---	1955 AM9
	(code M9R)	1	---- ---	---- ---	---- ---	---- ---	1955 AR5
	(code M9T)	1	---- ---	---- ---	---- ---	---- ---	1955 AL3
	(code M9X)	1	---- ---	---- ---	---- ---	---- ---	1955 AX9
	(side)						
	(code M9B)	1	---- ---	---- ---	---- ---	---- ---	1988-9 AB4
	(codes M9C, M9V, M9W)	1	---- ---	---- ---	---- ---	---- ---	1956-7 VW3
	(code M9K)	1	---- ---	---- ---	---- ---	---- ---	1988-9 AM9
	(code M9R)	1	---- ---	---- ---	---- ---	---- ---	1988-9 AR5
	(code M9T)	1	---- ---	---- ---	---- ---	---- ---	1988-9 AL3
	(code M9X)	1	---- ---	---- ---	---- ---	---- ---	1956-7 VX9
	Fastener (to pocket panel)	2	---- ---	---- ---	---- ---	---- ---	6000432
	Cap fastener	8	---- ---	---- ---	---- ---	---- ---	6000434
23-112-14	COVER, Folding Top Dust Boot Side						
	Y1-M						
	(code M9B)	1	---- ---	---- ---	---- ---	---- ---	1988-9 AB4
	(code M9K)	1	---- ---	---- ---	---- ---	---- ---	1988-9 AM9
	(code M9R)	1	---- ---	---- ---	---- ---	---- ---	1988-9 AR5
	(code M9T)	1	---- ---	---- ---	---- ---	---- ---	1988-9 AL3
	(codes M9C, M9V, M9W)	1	---- ---	---- ---	---- ---	---- ---	1956-7 VW3
	(code M9X)	1	---- ---	---- ---	---- ---	---- ---	1956-7 VX9
	Fastener	8	---- ---	---- ---	---- ---	---- ---	6001422
23-112-18	RETAINER, Rear Seat Back Dust Boot						
	C1, C2	1	---- ---	---- ---	---- ---	---- ---	2577277
	Y1-M	1	---- ---	---- ---	---- ---	---- ---	2577382

★ Indicates use as required.
⊟ Indicates parts not listed in any previous parts book.

MyMopar.com

CODE	REMARKS	PER CAR	SED.	4D H.T	STA. WGN.	2D H.T	CV. CP.
23-112-21	FASTENER and PLATE, Folding Top Dust Boot to Belt Moulding Attaching						
	C1, C2 (eyelet)	23	---- ---	---- ---	---- ---	---- ---	2581 193
	Y1	23	---- ---	---- ---	---- ---	---- ---	2572 131
23-112-45	CURTAIN, Folding Top Back						
	C1, C2 (blue)	1	---- ---	---- ---	---- ---	---- ---	1910 AB1
	(white)	1	---- ---	---- ---	---- ---	---- ---	1910 AW1
	(black)	1	---- ---	---- ---	---- ---	---- ---	1910 AX9
	(back-lite)						
	(white)	1	---- ---	---- ---	---- ---	---- ---	⊟1911 AW1
	(black)	1	---- ---	---- ---	---- ---	---- ---	⊟1911 AX9
	(blue)	1	---- ---	---- ---	---- ---	---- ---	1911 AB1
	Y1-M (blue)	1	---- ---	---- ---	---- ---	---- ---	1931 AB1
	(white)	1	---- ---	---- ---	---- ---	---- ---	1931 VW1
	(black)	1	---- ---	---- ---	---- ---	---- ---	1931 AX9
	(gold and black)	1	---- ---	---- ---	---- ---	---- ---	1931 AL1
	(back-lite)						
	(blue)	1	---- ---	---- ---	---- ---	---- ---	1932 AB1
	(white)	1	---- ---	---- ---	---- ---	---- ---	1932 VW1
	(back-lite)						
	(black)	1	---- ---	---- ---	---- ---	---- ---	1932 AX9
	(gold and black)	1	---- ---	---- ---	---- ---	---- ---	1932 AL1
	Fastener (check strap cap)	1	---- ---	---- ---	---- ---	---- ---	6000 434
23-112-46	ZIPPER, Folding Top Rear Curtain						
	C1, C2 (white)	1	---- ---	---- ---	---- ---	---- ---	1913 AW2
	(black)	1	---- ---	---- ---	---- ---	---- ---	1913 AX8
	Y1 (full)						
	(white)	1	---- ---	---- ---	---- ---	---- ---	1918 VW2
	(black)	1	---- ---	---- ---	---- ---	---- ---	1918 AX8
23-112-50	TAPE, Folding Top and Headrest						
	C1, C2, C3 (sold by the inch)						
	(headrest) (closure loop)	★	---- ---	1933 TX8	1933 TX8	1933 TX8	1933 TX8
	(headrest) (closure hook)	★	---- ---	1934 TX8	1934 TX8	1934 TX8	1934 TX8
	(folding top) (closure loop)	★	---- ---	---- ---	---- ---	---- ---	1933 TX8
	(side cover to rear curtain closure)	★	---- ---	---- ---	---- ---	---- ---	1933 TX8
	Y1						
	(dust boot cover closure)	★	---- ---	---- ---	---- ---	---- ---	1934 TX8
	(rear curtain to top closure)	★	---- ---	---- ---	---- ---	---- ---	1934 TX8
	(side cover to rear curtain closure)	★	---- ---	---- ---	---- ---	---- ---	1933 TX8
	(dust boot side cover, in closure hook half)	★	---- ---	---- ---	---- ---	---- ---	1934 TX8
	(center dust boot to side closure) (loop half)	★	---- ---	---- ---	---- ---	---- ---	1973 VX8
23-112-70	RETAINER, Folding Top to Belt Bar						
	C1, C2 (side)	1	---- ---	---- ---	---- ---	---- ---	2482 436-7
	(center)	1	---- ---	---- ---	---- ---	---- ---	2482 438
	(corner)	1	---- ---	---- ---	---- ---	---- ---	2526 966-7
	Y1-M (side)	1	---- ---	---- ---	---- ---	---- ---	2448 138-9
	(center)	1	---- ---	---- ---	---- ---	---- ---	2448 137
	(corner)	1	---- ---	---- ---	---- ---	---- ---	2448 136
	(quarter belt bar)	2	---- ---	---- ---	---- ---	---- ---	2484 403
23-112-75	TIP, Wire-on Binding End						
	C1, C2, Y1	1	---- ---	---- ---	---- ---	---- ---	1158 976-7
	Screw (end tip)	2	---- ---	---- ---	---- ---	---- ---	6024 438

★ Indicates use as required.
⊟ Indicates parts not listed in any previous parts book.
Right and left part numbers are on same line, first number is right, second number is left.
• Indicates change or addition.

MyMopar.com

Printed in U.S.A.
Prices and specifications subject to change without notice.
May 1965.

CODE	REMARKS	PER CAR	SED.	4D H.T	STA. WGN.	2D H.T	CV. CP.
23-112-88	CABLE, Folding Top Rear Bow Tension						
	C1, C2, C3						
	(black)	2	---- ---	---- ---	---- ---	---- ---	1979 AX8
	(white)	2	---- ---	---- ---	---- ---	---- ---	1979 AW2
	(cover side)	1	---- ---	---- ---	---- ---	---- ---	2589 026-7
	Clip (adjusting nut)	2	---- ---	---- ---	---- ---	---- ---	6025 729
	Nut (adjusting)	2	---- ---	---- ---	---- ---	---- ---	6025 727
	Y1-M						
	(black)	2	---- ---	---- ---	---- ---	---- ---	1972 AX8
	(white)	2	---- ---	---- ---	---- ---	---- ---	1972 VW2
	(cable and spring) (side front)	2	---- ---	---- ---	---- ---	---- ---	2525 855
	Bolt (link to rear tension cable) (upper)	2	---- ---	---- ---	---- ---	---- ---	6022 169
23-112-108	DECK and SIDE QUARTER, Folding Top						
	C1, C2 (blue)	1	---- ---	---- ---	---- ---	---- ---	1905 AB1
	(white)	1	---- ---	---- ---	---- ---	---- ---	1905 AW1
	(black)	1	---- ---	---- ---	---- ---	---- ---	1905 AX9
	Y1-M (blue)	1	---- ---	---- ---	---- ---	---- ---	1938 AB1
	(white)	1	---- ---	---- ---	---- ---	---- ---	*1938 AW3
	(black)	1	---- ---	---- ---	---- ---	---- ---	1938 AX9
	(gold and black)	1	---- ---	---- ---	---- ---	---- ---	1938 AL1
23-112-112	PAD, Folding Top Side Quarter Stay						
	C1, C2 (black)	1	---- ---	---- ---	---- ---	---- ---	1906-7 AX9
	(white)	1	---- ---	---- ---	---- ---	---- ---	1906-7 AW1
	Screw (to header)	7	---- ---	---- ---	---- ---	---- ---	6023 247
	Y1-M (black)	1	---- ---	---- ---	---- ---	---- ---	1950-1 VX9
	(white)	1	---- ---	---- ---	---- ---	---- ---	1950-1 VW1
	Screw (stay pad to header)	4	---- ---	---- ---	---- ---	---- ---	6000 223
23-112-153	WELL, Pocket PANEL, Pocket Panel COVER, Pocket Shelf PANEL, Folding Top						
	C1, C2 (well)						
	(codes L4B, H4B)	1	---- ---	---- ---	---- ---	---- ---	1960 AB4
	(codes M4B, P4B)	1	---- ---	---- ---	---- ---	---- ---	1960 AB8
	(codes L4L, M4L, L4Y, M4W)	1	---- ---	---- ---	---- ---	---- ---	1960 AY3
	(codes L4R, M3R, M4R, P3R, P4R, H4R)	1	---- ---	---- ---	---- ---	---- ---	1960 AR7
	(codes L4T, H4T)	1	---- ---	---- ---	---- ---	---- ---	1960 AT6
	(codes M4T, P4T)	1	---- ---	---- ---	---- ---	---- ---	1960 AT8
	(codes L4X, M3X, M4X, P3X, P4X, H4X)	1	---- ---	---- ---	---- ---	---- ---	1960 AX9
	(codes M4U, P4U)	1	---- ---	---- ---	---- ---	---- ---	1960 AW3
	(pocket panel w/bracket) (paint as required)	1	---- ---	---- ---	---- ---	---- ---	2000-1 AT8
	Y1-M (well)						
	(code M9B)	1	---- ---	---- ---	---- ---	---- ---	1961 AB4
	(codes M9C, M9V, M9W)	1	---- ---	---- ---	---- ---	---- ---	1961 AW3
	(code M9K)	1	---- ---	---- ---	---- ---	---- ---	1961 AM9
	(code M9R)	1	---- ---	---- ---	---- ---	---- ---	1961 AR5
	(code M9T)	1	---- ---	---- ---	---- ---	---- ---	1961 AL3
	(code M9X)	1	---- ---	---- ---	---- ---	---- ---	1961 AX9
	Screw (well cover flap to body) (pocket panel)	4	---- ---	---- ---	---- ---	---- ---	6000 223
	(code M9B)	1	---- ---	---- ---	---- ---	---- ---	4818-9 AB4
	(codes M9C, M9V, M9W)	1	---- ---	---- ---	---- ---	---- ---	4818-9 AW3

★ Indicates use as required.
⊟ Indicates parts not listed in any previous parts book.

MyMopar.com

Printed in U.S.A.
Prices and specifications subject to change without notice.
Right and left part numbers are on same line, first number is right, second number is left.
* Indicates change or addition.

CODE	REMARKS	PER CAR	SED.	4D H.T	STA. WGN.	2D H.T	CV. CP.
23-112-153	WELL, Pocket Panel, Pocket Panel Cover, Pocket Shelf Panel, Folding Top - Cont'd						
	Y1-M						
	(code M9K)	1	---- ---	---- ---	---- ---	---- ---	4818-9 AM9
	(code M9R)	1	---- ---	---- ---	---- ---	---- ---	4818-9 AR5
	(code M9T)	1	---- ---	---- ---	---- ---	---- ---	4818-9 AL3
	(code M9X)	1	---- ---	---- ---	---- ---	---- ---	4818-9 AX9
	Screw and Washer	2	---- ---	---- ---	---- ---	---- ---	6023 476
	(pocket panel cover)						
	(code M9B)	1	---- ---	---- ---	---- ---	---- ---	4816-7 AB4
	(codes M9C, M9V, M9W)	1	---- ---	---- ---	---- ---	---- ---	4816-7 AW3
	(code M9K)	1	---- ---	---- ---	---- ---	---- ---	4816-7 AM9
	(code M9R)	1	---- ---	---- ---	---- ---	---- ---	4816-7 AR5
	(code M9T)	1	---- ---	---- ---	---- ---	---- ---	4816-7 AL3
	(code M9X)	1	---- ---	---- ---	---- ---	---- ---	4816-7 AX9
	(inner shelf cover)						
	(code M9B)	1	---- ---	---- ---	---- ---	---- ---	4814-5 AB4
	(codes M9C, M9V, M9W)	1	---- ---	---- ---	---- ---	---- ---	4814-5 AW3
	(code M9K)	1	---- ---	---- ---	---- ---	---- ---	4814-5 AM9
	(code M9R)	1	---- ---	---- ---	---- ---	---- ---	4814-5 AR5
	(code M9T)	1	---- ---	---- ---	---- ---	---- ---	4814-5 AL3
	(code M9X)	1	---- ---	---- ---	---- ---	---- ---	4814-5 AX9
23-112-160	PAD, Folding Top Pocket Panel Arm Rest						
	C1, C2						
	(codes L4B, M4B, P4B)	1	---- ---	---- ---	---- ---	---- ---	1244-5 AB8
	(codes L4R, M3R, M4R, P3R, P4R)	1	---- ---	---- ---	---- ---	---- ---	1244-5 AR8
	(codes M4T, P4T)	1	---- ---	---- ---	---- ---	---- ---	1244-5 AT8
	(codes L4X, M3X, M4X, P3X, P4X)	1	---- ---	---- ---	---- ---	---- ---	1244-5 AX9
	(codes M4L, P4L)	1	---- ---	---- ---	---- ---	---- ---	1244-5 AY3
	(codes M4W, P4W)	1	---- ---	---- ---	---- ---	---- ---	1244-5 AW3
23-112-165	PLATE, Folding Top Pocket Panel Finish						
	Y1-M	1	---- ---	---- ---	---- ---	---- ---	2581 254-5
23-113-2	WEATHERCORD, Door						
	C1, C2, C3 (sold by the inch)						
	(codes L1B, L2B, L5B, M4B, P4B)	★	1536 AB8	*1536 AB8	---- ---	*1536 AB8	*1536 AB8
	(codes L4B, L8B, H1B, H4B)	★	---- ---	1536 AB4	1536 AB4	1536 AB4	1536 AB4
	(codes L1Q, L2Q)	★	1536 AQ8				
	(codes L8Q, H1Q)	★	---- ---	1536 AQ4	1536 AQ4	1536 AQ4	
	(codes L1R, L2R, L4R, L5R, L8R, H1R, H4R)	★	*1536 AR5	*1536 AR5	*1536 AR5	*1536 AR5	
	(codes L4L, H1L, H4L)	★	*1536 AY3	1536 AY3	---- ---	1536 AY3	1536 AY3
	(codes M3R, P3R, M4R, P4R)	★	---- ---	1536 AR8	---- ---	1536 AR8	1536 AR8
	(codes L1T, L2T, L5T, P4T)	★	1536 AT8	1536 AT8	1536 AT8	1536 AT8	1536 AT8
	(codes L4T, L8T, H1T, H4T)	★	---- ---	1536 AT6	1536 AT6	1536 AT6	1536 AT6
	(codes L1N, L2N, L4N, L2L, M4L, P4L, M1N, M3X, P3X L4X, M4X, P4X, H4X)	★	1536 AX8	1536 AX8	1536 AX8	1536 AX8	1536 AX8
	(codes M4W, P4W, H1N)	★	---- ---	1536 AW2	1536 AW2	1536 AW2	1536 AW2
23-113-25	WEATHERCORD, Front Door Hinge Pillar						
	Y1 (sold by the inch)						
	(codes M3B, M7B, M8B, M9B, H3B, H7B, M3C, M9C, H3C)	★	---- ---	1536 VB4	---- ---	1536 VB4	1536 VB4

★ Indicates use as required.
B Indicates parts not listed in any previous parts book.
Right and left part numbers are on same line, first number is right, second number is left.
* Indicates change or addition.

Printed in U.S.A.
Prices and specifications subject to change without notice.
May 1965.

MyMopar.com

CODE	REMARKS	PER CAR	SED.	4D H.T	STA. WGN.	2D H.T	CV. CP.
23-113-25	WEATHERCORD, Front Door Hinge Pillar - Cont'd						
	Y1 (sold by the inch)						
	(codes M3K, M9K)	★	---- ---	1536 VM9	---- ---	1536 VM9	1536 VM9
	(code M7Q)	★	---- ---	1536 VQ4			
	(codes M3R, M7R, M9R, H3R, M3V, M9V, H3V)	2	---- ---	1516 AR5	---- ---	1516 AR5	1516 AR5
	(codes M3T, M7T, M9T, H7T)	2	---- ---	1516 AL3	---- ---	1516 AL3	1516 AL3
	(codes M7G, M8G, H7G)	★	---- ---	1536 VF9	---- ---	1536 VF9	
23-113-30	WEATHERCORD, Door Lock Pillar C1, C2, C3 (sold by the inch)						
	(codes L4B, L8B, H1B, H4B)	★	---- ---	1536 AB4			
	(code M4B)	★	---- ---	1536 AB8			
	(codes L8Q, H1Q)	★	---- ---	1536 AQ4			
	(codes L4R, L8R, H1R, H4R)	★	---- ---	*1536 AR5			
	(code M4R)	★	---- ---	1536 AR8			
	(codes L8T, H1T)	★	---- ---	1536 AT6			
	(code M4T)	★	---- ---	1536 AT8			
	(codes L4N, M1N, M4X, H4X)	★	---- ---	1536 AX8			
	(codes H1N, M4W)	★	---- ---	1536 AW2			
	(codes L4L, H1L, H4L)	★	---- ---	1536 AY3			
	Y1						
	(code M8G)	★	---- ---	---- ---	---- ---	1539 VX8	
	(code M9X)	★	---- ---	---- ---	---- ---	1536 VF9	
23-113-31	RETAINER, Door Weathercord C1, C2, C3	★	2572 133	2572 133	2572 133	2572 133	2572 133
	(center pillar w/cord)	1	---- ---	---- ---	2581 726-7		
23-113-50	WELT, Windshield Side Garnish Moulding to Instrument Panel						
	Y1 (paint as required) (black)	1	---- ---	4252-3 VX8	---- ---	4252-3 VX8	4252-3 VX8
23-113-52	STRIP, Windshield to Instrument Panel Lower Inside Trim C1, C2, C3						
	(codes L1B, L2B, L4B, L5B, L8B, L9B, M4B, H1B, H4B, P4B)	1	3710 AB8	3710 AB8	3710 AB8	3710 AB8	3710 AB8
	(codes L1Q, L2Q, L8Q, H1Q)	1	3710 AQ8	3710 AQ8			
	(codes L1T, L2T, L4T, L5T, L8T, M4T, H1T, H4T, P4T)	1	3710 AT8	3710 AT8	3710 AT8	3710 AT8	3710 AT8
	(codes L1N, L2N, L4N, M1N, H1N, L2L, L4L, M4L, H1L, H4L, P4L, L4X, M3X, P3X, M4X, P4X, M4W, L9X, H4X, P4W)	1	3710 AX9	3710 AX9	3710 AX9	3710 AX9	3710 AX9
	(codes L1R, L2R, L4R, L5R, L8R, L9R, M3R, P3R, P4R, M4R, H1R, H4R)	1	3710 AR8	3710 AR8	3710 AR8	3710 AR8	3710 AR8
23-113-58	RETAINER, Windshield to Instrument Panel Trim Strip C1, C2, C3	1	2571 660	2571 660	2571 660	2571 660	2571 660
23-113-84	WELT, Folding Top Dust Boot Filler Channel Attaching C1, C2, Y1 (folding top header)	★	---- ---	---- ---	---- ---	---- ---	2572 166
	C1, C2 (white)	1	---- ---	---- ---	---- ---	---- ---	*1959 VW2
	(black)	1	---- ---	---- ---	---- ---	---- ---	*1959 VX8
	Y1	1	---- ---	---- ---	---- ---	---- ---	*2192 739

★ Indicates use as required.
B Indicates parts not listed in any previous parts book.

Printed in U.S.A.
Prices and specifications subject to change without notice.
Right and left part numbers are on same line, first number is right, second number is left.
* Indicates change or addition.
MyMopar.com

CODE	REMARKS	PER CAR	SED.	4D H.T	STA. WGN.	2D H.T	CV. CP.
23-113-102	WELT, Instrument Panel End Extension						
	Y1 (black)	2	---- ---	4255 VX8	---- ---	4255 VX8	4255 VX8
23-114-10	BINDING, 5/8" wire-on						
	C1, C2, Y1						
	(blue)	1	---- ---	---- ---	---- ---	---- ---	1903 VB1
	(white)	1	---- ---	---- ---	---- ---	---- ---	1903 VW1
	(gold and black)	1	---- ---	---- ---	---- ---	---- ---	1903 AL1
	(black)	1	---- ---	---- ---	---- ---	---- ---	1903 TX8
23-115-4	PUSH NUT, Front Seat Back to Cushion						
	C1, C2, C3, Y1-M						
	(bucket seats)	4	---- ---	2410 102	2410 102	2410 102	2410 102
	(3rd seat back hinge to bracket)	2	---- ---	---- ---	2410 102	---- ---	---- ---
	(except bucket seats)	2	---- ---	---- ---	---- ---	6024 203	6024 203
23-115-5	WASHER, Front Seat Center Arm Rest Trim						
	C2, C3, Y1-M	2	---- ---	1918 299	1918 299	1918 299	1918 299
23-115-6	PIN, Front Seat Back Frame to Cushion Frame Mounting						
	C2, C3, Y1	4	---- ---	2410 054	2410 054	2410 054	2410 054
	(tailgate opening pillar upper retaining clip)	6	---- ---	---- ---	2581 395		
23-115-8	CLIP, Wheelhouse Cover						
	C1, C3	13	---- ---	---- ---	2572 142		
	(belt bar to spare tire cover)	2	---- ---	---- ---	2581 718		
23-115-10	SCREW, Front Seat Center Arm Rest to Center Cushion						
	C2, C3, Y1-M	2	---- ---	2092 212	---- ---	2092 212	2092 212

NOTES

★ Indicates use as required.
⊟ Indicates parts not listed in any previous parts book.
Right and left part numbers are on same line, first number is right, second number is left.
• Indicates change or addition.

MyMopar.com

Printed in U.S.A.
Prices and specifications subject to change without notice.
May 1965.

CODE	REMARKS	PER CAR	SED.	4D H.T	STA. WGN.	2D H.T	CV. CP.

NOTES

★ Indicates use as required.
⊟ Indicates parts not listed in any previous parts book.
May 1965.

MyMopar.com

Printed in U.S.A.
Prices and specifications subject to change without notice.
Right and left part numbers are on same line, first number is right, second number is left.
* Indicates change or addition.

GROUP 24 - AIR CONDITIONING

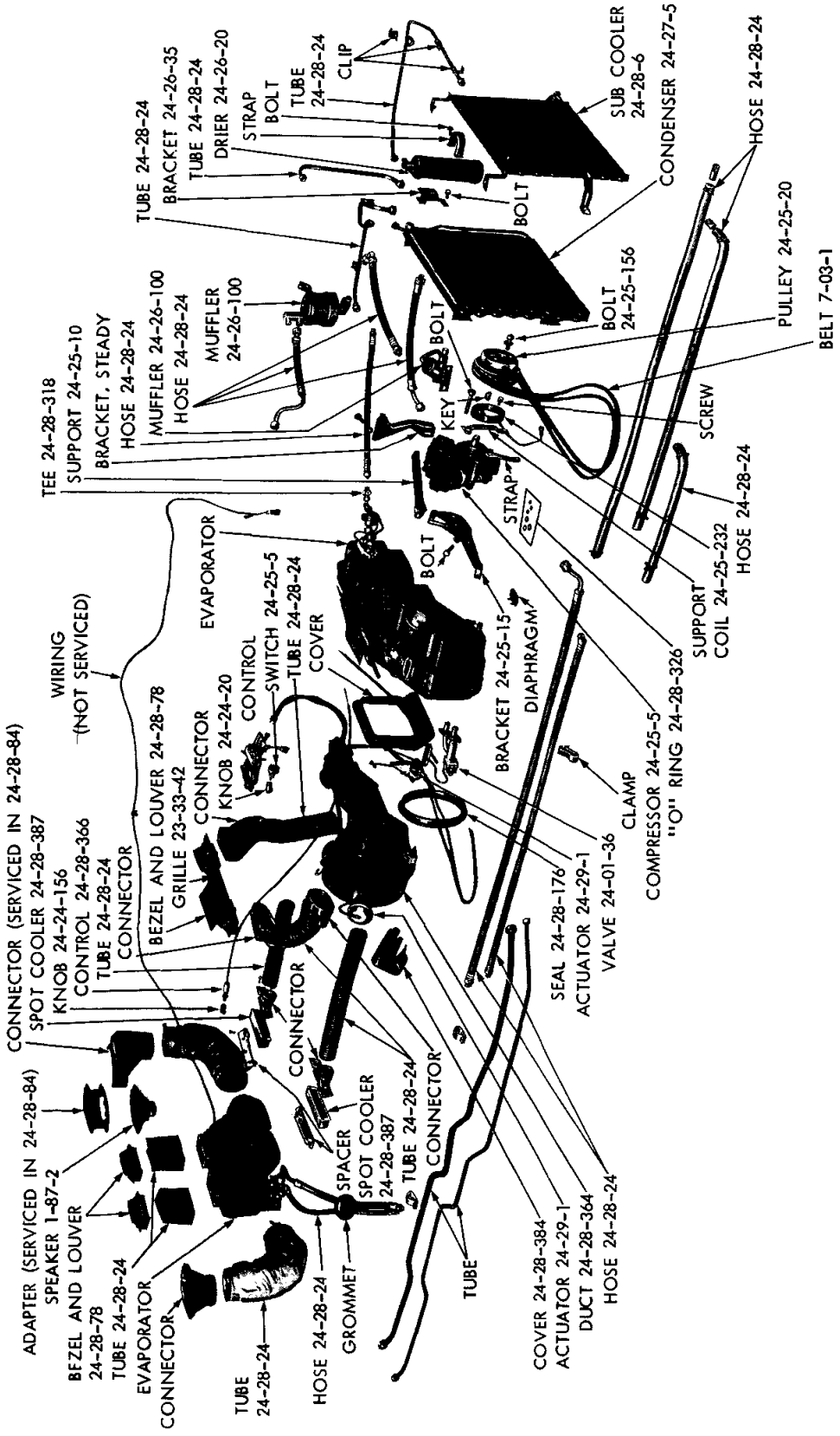

AIR CONDITIONING SYSTEM - MODELS 202 AND 912

PARTS INDICATED BY NAME ONLY - ORDER BY DESCRIPTION

MyMopar.com

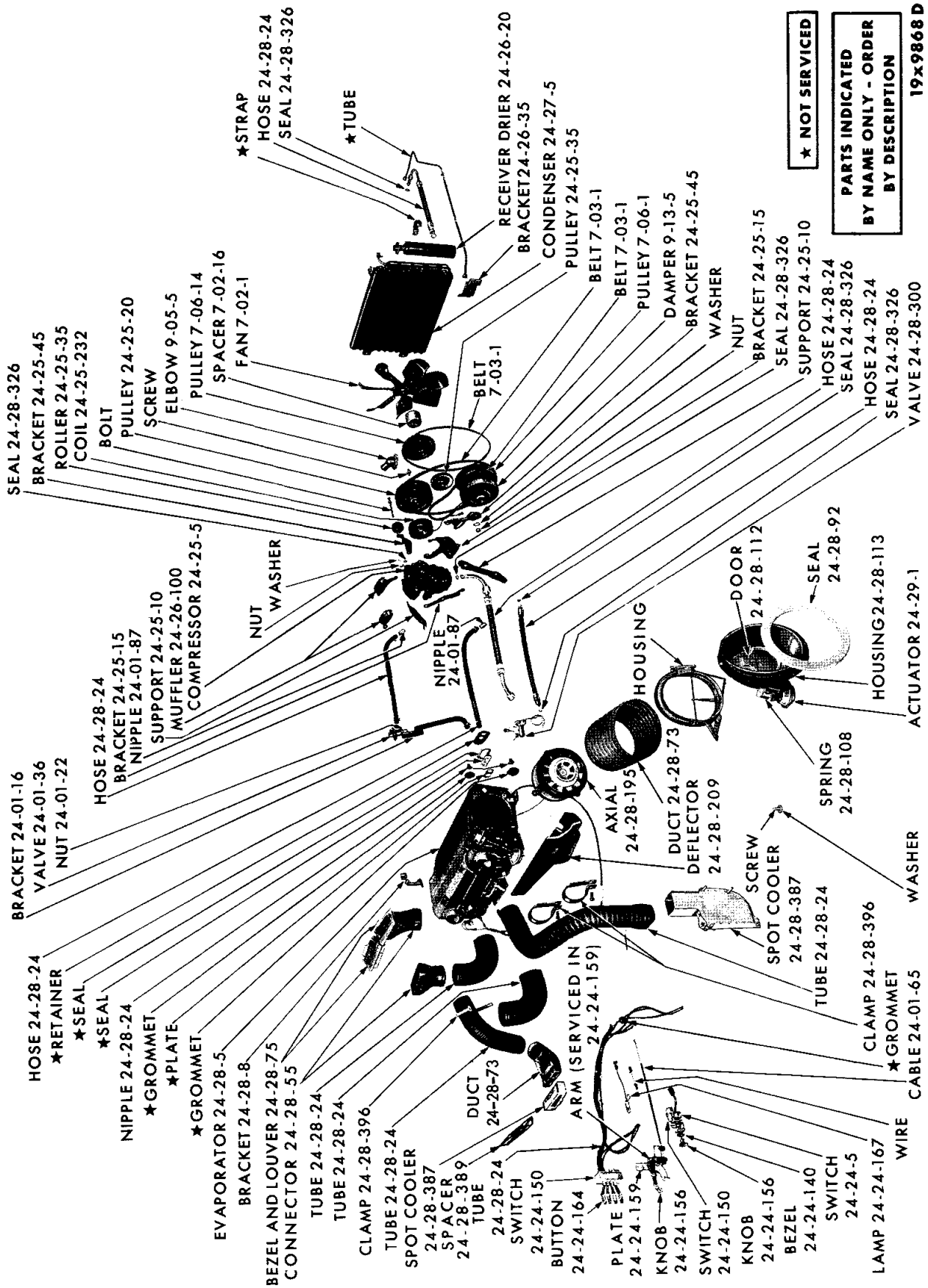
★STRAP
HOSE 24-28-24
SEAL 24-28-326
★TUBE
RECEIVER DRIER 24-26-20
BRACKET 24-26-35
CONDENSER 24-27-5
PULLEY 24-25-35
BELT 7-03-1
BELT 7-03-1
PULLEY 7-06-1
DAMPER 9-13-5
BRACKET 24-25-45
WASHER
NUT
BRACKET 24-25-15
SEAL 24-28-326
SUPPORT 24-25-10
HOSE 24-28-24
SEAL 24-28-326
HOSE 24-28-24
SEAL 24-28-326
VALVE 24-28-300
SEAL 24-28-326
BRACKET 24-25-45
ROLLER 24-25-35
COIL 24-25-232
BOLT
PULLEY 24-25-20
SCREW
ELBOW 9-05-5
PULLEY 7-06-14
SPACER 7-02-16
FAN 7-02-1
BELT 7-03-1
NUT
WASHER
NIPPLE 24-01-87
HOSE 24-28-24
BRACKET 24-25-15
NIPPLE 24-01-87
SUPPORT 24-25-10
MUFFLER 24-26-100
COMPRESSOR 24-25-5
BRACKET 24-01-16
VALVE 24-01-36
NUT 24-01-22
HOSE 24-28-24
★RETAINER
★SEAL
★SEAL
NIPPLE 24-28-24
★GROMMET
★PLATE
★GROMMET
EVAPORATOR 24-28-5
BRACKET 24-28-8
BEZEL AND LOUVER 24-28-75
CONNECTOR 24-28-55
TUBE 24-28-24
TUBE 24-28-24
CLAMP 24-28-396
TUBE 24-28-24
SPOT COOLER 24-28-387
SPACER 24-28-389
TUBE 24-28-24
SWITCH 24-24-150
BUTTON 24-24-164
DUCT 24-28-73
ARM (SERVICED IN 24-24-159)
PLATE 24-24-159
KNOB 24-24-156
SWITCH 24-24-150
KNOB 24-24-156
BEZEL 24-24-140
SWITCH 24-24-5
LAMP 24-24-167
WIRE
CABLE 24-01-65
★GROMMET
CLAMP 24-28-396
TUBE 24-28-24
SPOT COOLER 24-28-387
SCREW
DEFLECTOR 24-28-209
DUCT 24-28-73
AXIAL 24-28-195
HOUSING
DOOR 24-28-112
SEAL 24-28-92
HOUSING 24-28-113
ACTUATOR 24-29-1
SPRING 24-28-108
WASHER
★ NOT SERVICED
PARTS INDICATED BY NAME ONLY - ORDER BY DESCRIPTION
19x9868 D
AIR CONDITIONING SYSTEM - MODEL 952

MyMopar.com

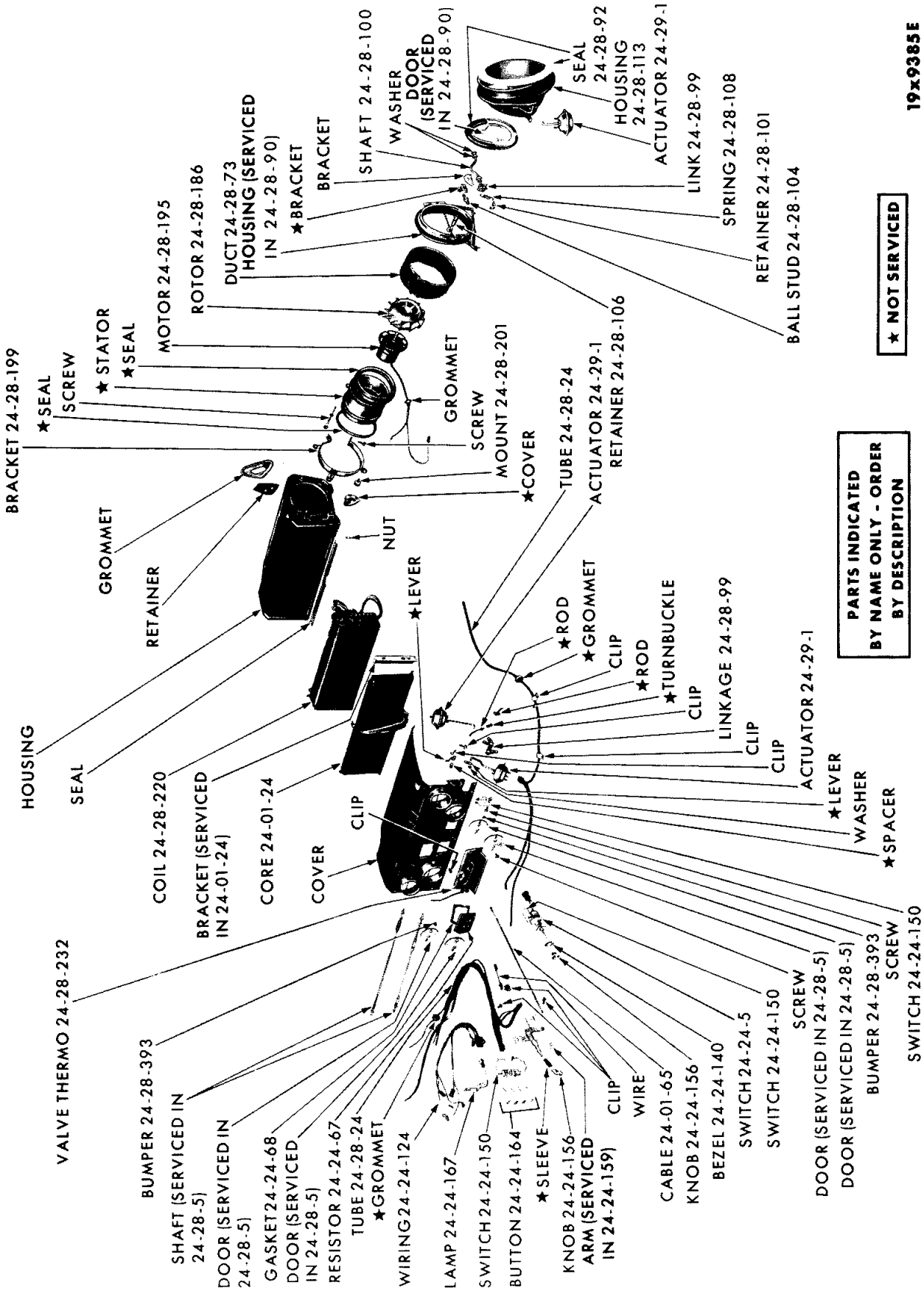
19x9385E
★ NOT SERVICED
PARTS INDICATED BY NAME ONLY - ORDER BY DESCRIPTION
AIR CONDITIONING EVAPORATOR - MODEL 932
SEAL 24-28-92
HOUSING 24-28-113
ACTUATOR 24-29-1
LINK 24-28-99
SPRING 24-28-108
RETAINER 24-28-101
BALL STUD 24-28-104
WASHER
DOOR (SERVICED IN 24-28-90)
SHAFT 24-28-100
BRACKET
★BRACKET
DUCT 24-28-73
HOUSING (SERVICED IN 24-28-90)
ROTOR 24-28-186
MOTOR 24-28-195
★SEAL
★STATOR
SCREW
★SEAL
BRACKET 24-28-199
GROMMET
SCREW
MOUNT 24-28-201
★COVER
TUBE 24-28-24
ACTUATOR 24-29-1
RETAINER 24-28-106
NUT
GROMMET
RETAINER
HOUSING
SEAL
COIL 24-28-220
BRACKET (SERVICED IN 24-01-24)
CORE 24-01-24
COVER
CLIP
★LEVER
★ROD
★GROMMET
CLIP
★ROD
★TURNBUCKLE
CLIP
LINKAGE 24-28-99
CLIP
CLIP
ACTUATOR 24-29-1
★LEVER
WASHER
★SPACER
SWITCH 24-24-150
SCREW
BUMPER 24-28-393
DOOR (SERVICED IN 24-28-5)
DOOR (SERVICED IN 24-28-5)
SCREW
SWITCH 24-24-150
SWITCH 24-24-5
BEZEL 24-24-140
KNOB 24-24-156
CABLE 24-01-65
WIRE
CLIP
★SLEEVE
KNOB 24-24-156
ARM (SERVICED IN 24-24-159)
BUTTON 24-24-164
SWITCH 24-24-150
LAMP 24-24-167
WIRING 24-24-124
★GROMMET
TUBE 24-28-24
RESISTOR 24-24-67
DOOR (SERVICED IN 24-28-5)
GASKET 24-24-68
DOOR (SERVICED IN 24-28-5)
SHAFT (SERVICED IN 24-28-5)
BUMPER 24-28-393
VALVE THERMO 24-28-232

MyMopar.com

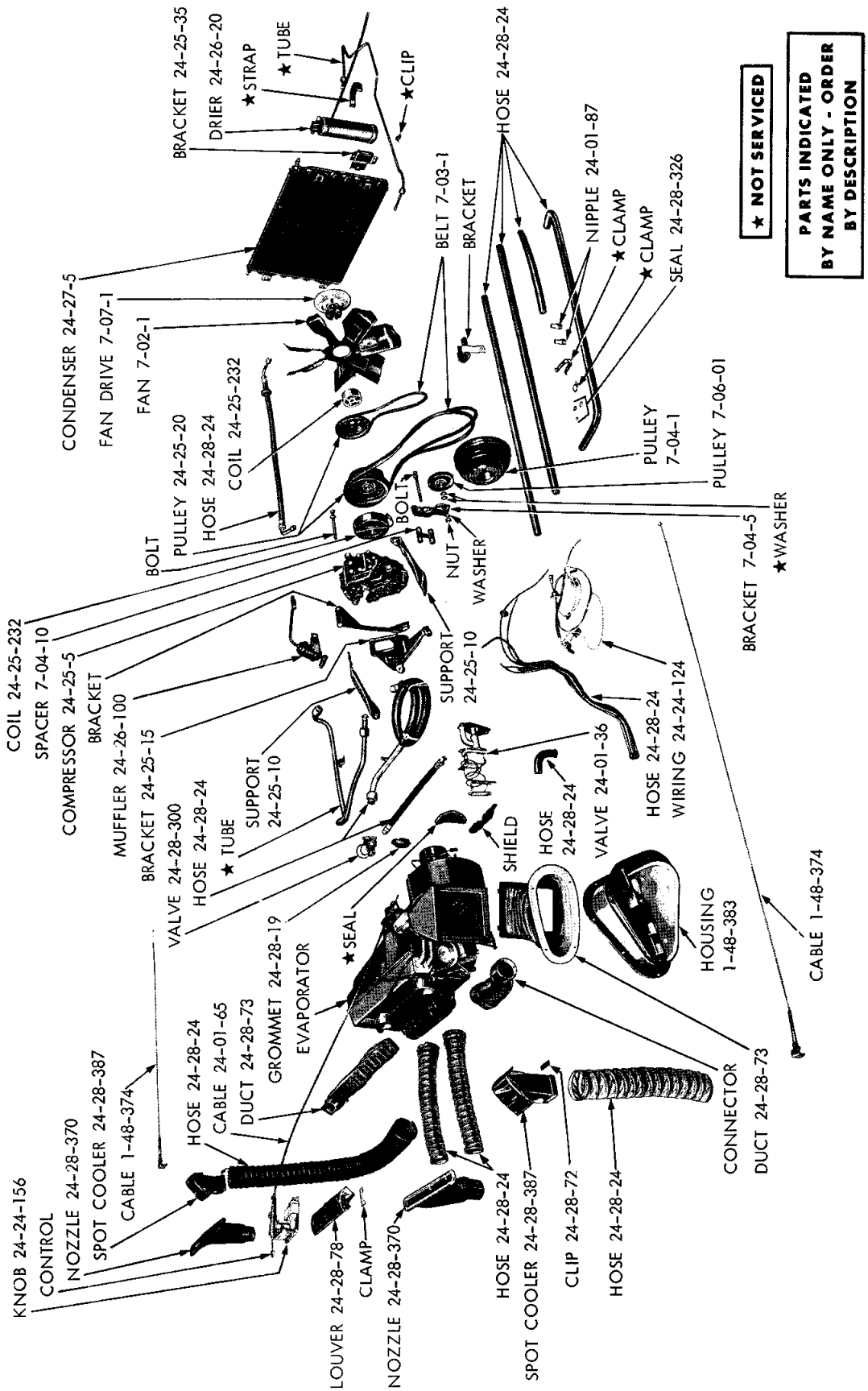

AIR CONDITIONING SYSTEM - MODEL 953

MyMopar.com

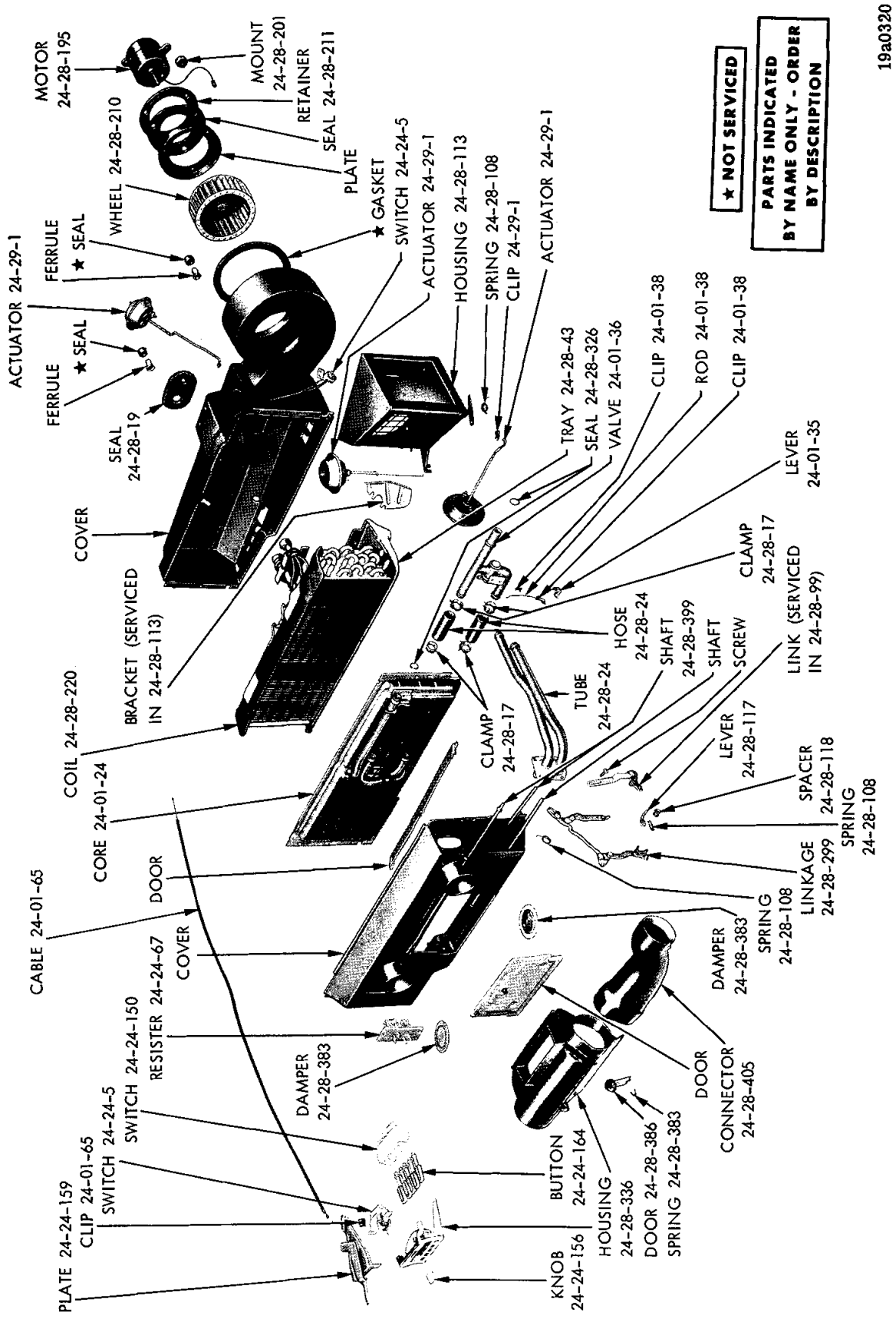

AIR CONDITIONING EVAPORATOR - MODEL 953

MyMopar.com

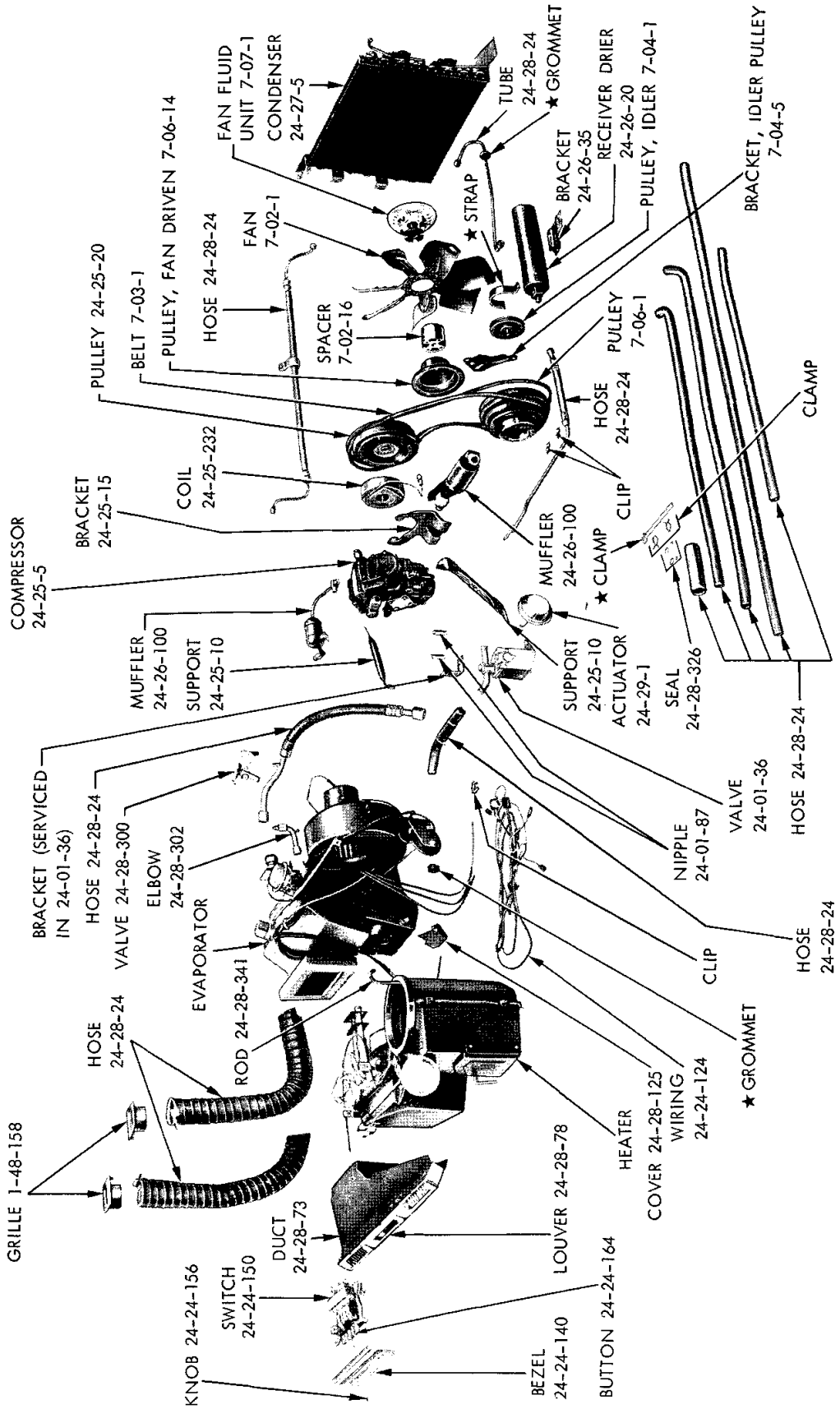
19a0319 A
FAN FLUID UNIT 7-07-1
CONDENSER 24-27-5
TUBE 24-28-24
★ GROMMET
RECEIVER DRIER 24-26-20
PULLEY, IDLER 7-04-1
BRACKET, IDLER PULLEY 7-04-5
★ STRAP
BRACKET 24-26-35
FAN 7-02-1
HOSE 24-28-24
PULLEY, FAN DRIVEN 7-06-14
BELT 7-03-1
PULLEY 24-25-20
SPACER 7-02-16
PULLEY 7-06-1
HOSE 24-28-24
CLAMP
CLIP
MUFFLER 24-26-100
★ CLAMP
COIL 24-25-232
BRACKET 24-25-15
COMPRESSOR 24-25-5
MUFFLER 24-26-100
SUPPORT 24-25-10
SUPPORT 24-25-10
ACTUATOR 24-29-1
SEAL 24-28-326
HOSE 24-28-24
BRACKET (SERVICED IN 24-01-36)
HOSE 24-28-24
VALVE 24-28-300
ELBOW 24-28-302
EVAPORATOR 24-28-341
NIPPLE 24-01-87
VALVE 24-01-36
CLIP
HOSE 24-28-24
HOSE 24-28-24
ROD 24-28-341
★ GROMMET
WIRING 24-24-124
COVER 24-28-125
HEATER
GRILLE 1-48-158
LOUVER 24-28-78
DUCT 24-28-73
SWITCH 24-24-150
KNOB 24-24-156
BUTTON 24-24-164
BEZEL 24-24-140
★ NOT SERVICED
PARTS INDICATED BY NAME ONLY - ORDER BY DESCRIPTION
AIR CONDITIONING SYSTEM - MODEL 954

MyMopar.com

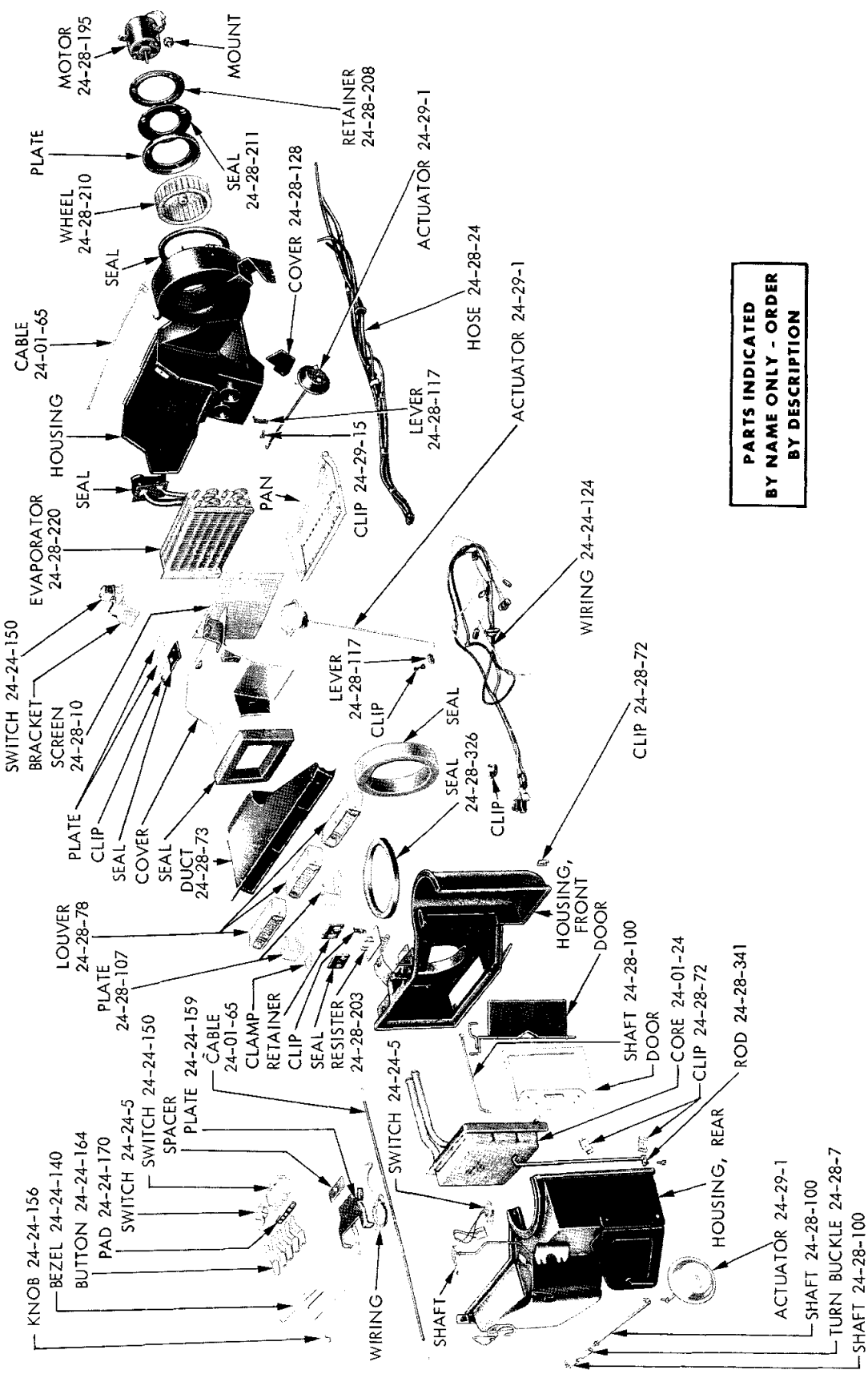

AIR CONDITIONING EVAPORATOR (MODEL 954) - VALIANT AND DART

MyMopar.com

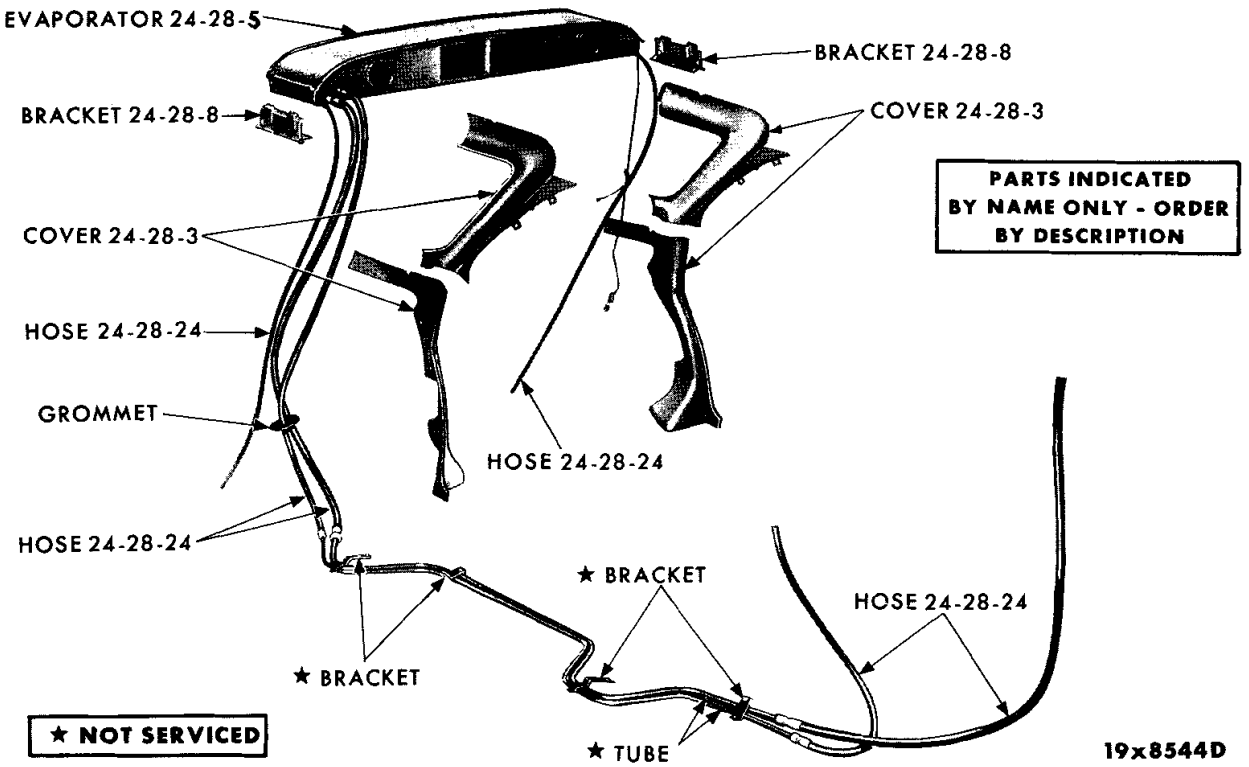

AIR CONDITIONING SYSTEM (ROOF UNIT) - STATION WAGON

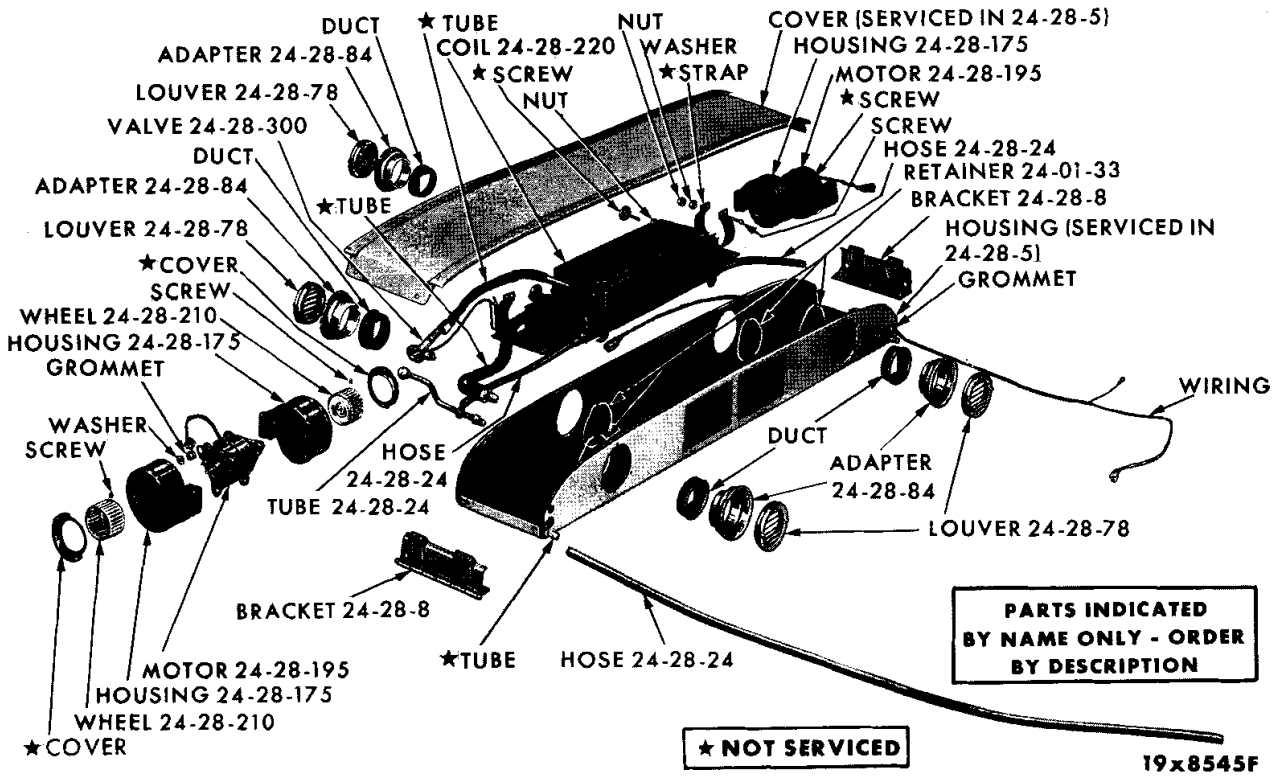

AIR CONDITIONING EVAPORATOR (ROOF UNIT) - STATION WAGON

MyMopar.com

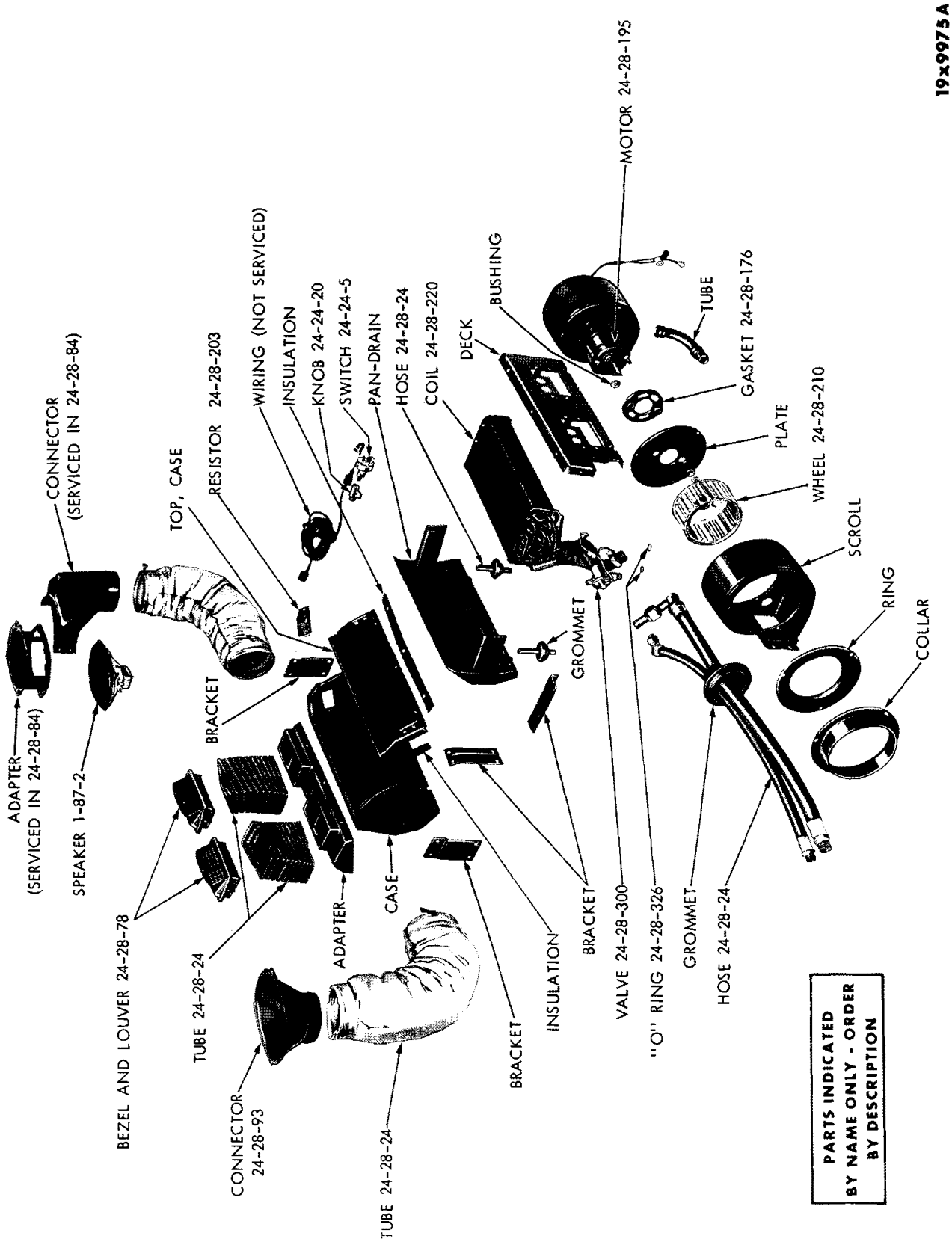

AIR CONDITIONING EVAPORATOR (TRUNK UNIT) - MODEL 202

MyMopar.com

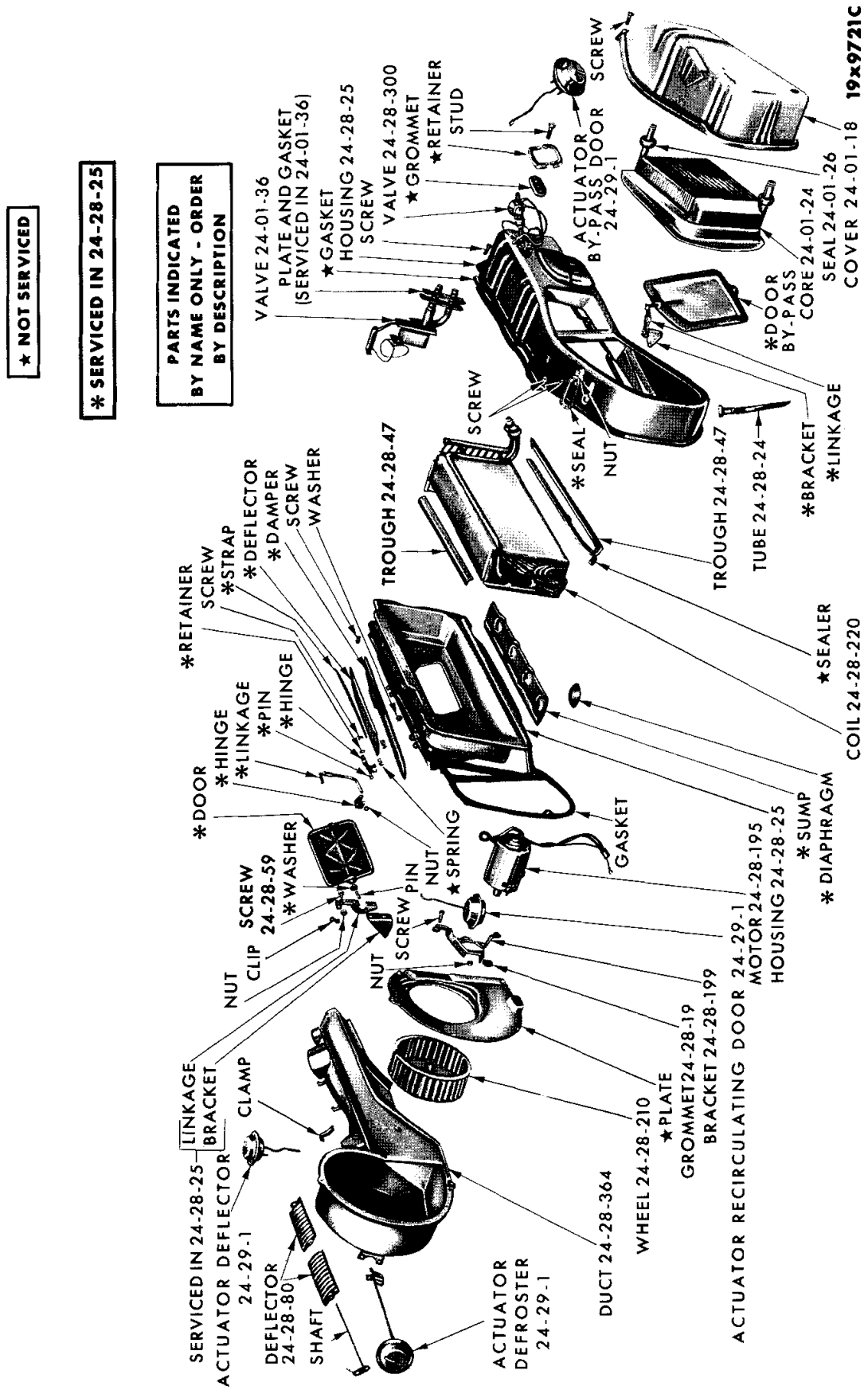

AIR CONDITIONING EVAPORATOR - MODEL L-912

MyMopar.com

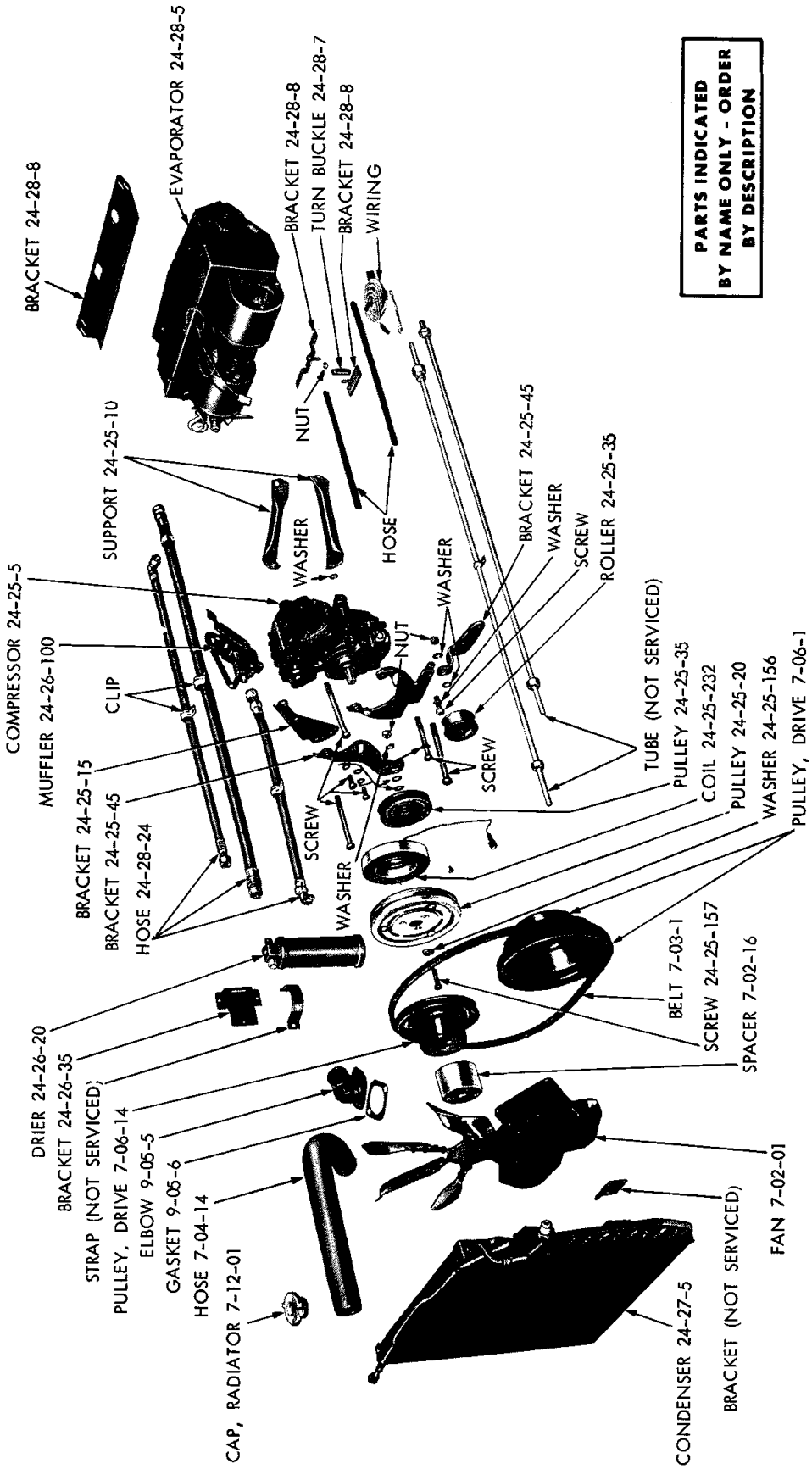

AIR CONDITIONING SYSTEM (MODEL K) - VALIANT AND DART (273 CU. IN. ENGINE)

MyMopar.com

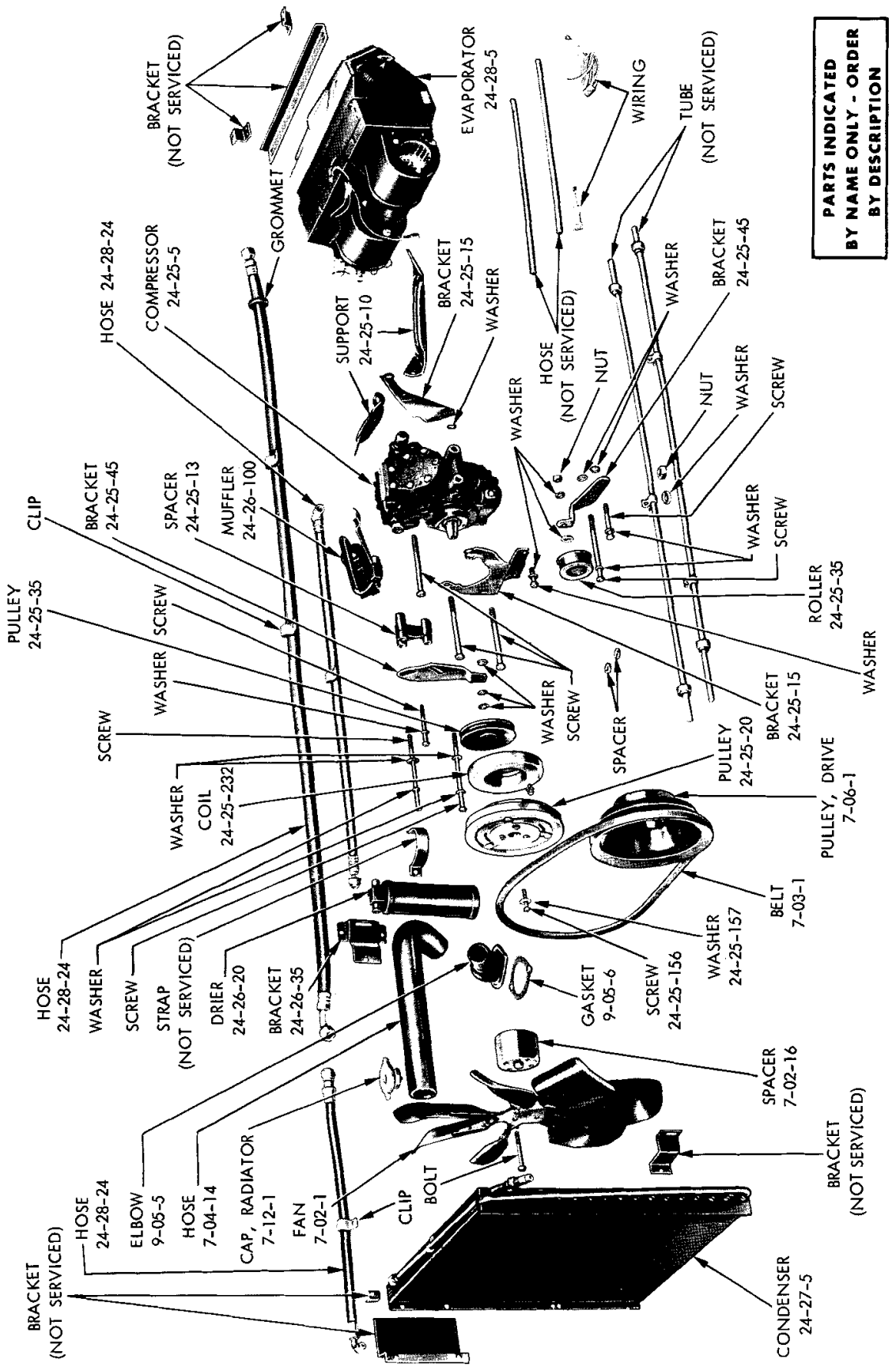

AIR CONDITIONING SYSTEM (MODEL K) - PLYMOUTH (318 CU. IN. ENGINE)

MyMopar.com

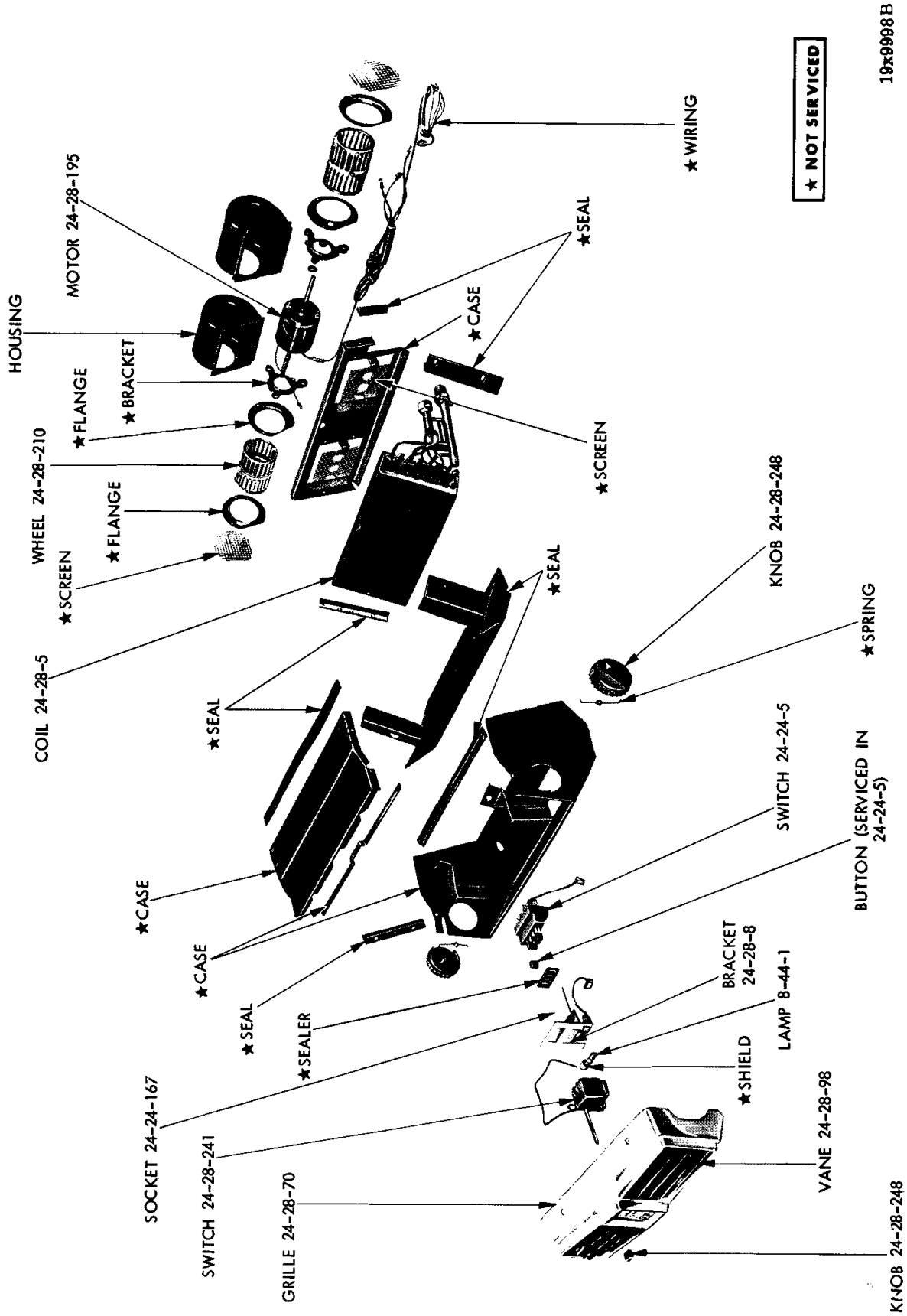

AIR CONDITIONING EVAPORATOR - MODEL K

MyMopar.com

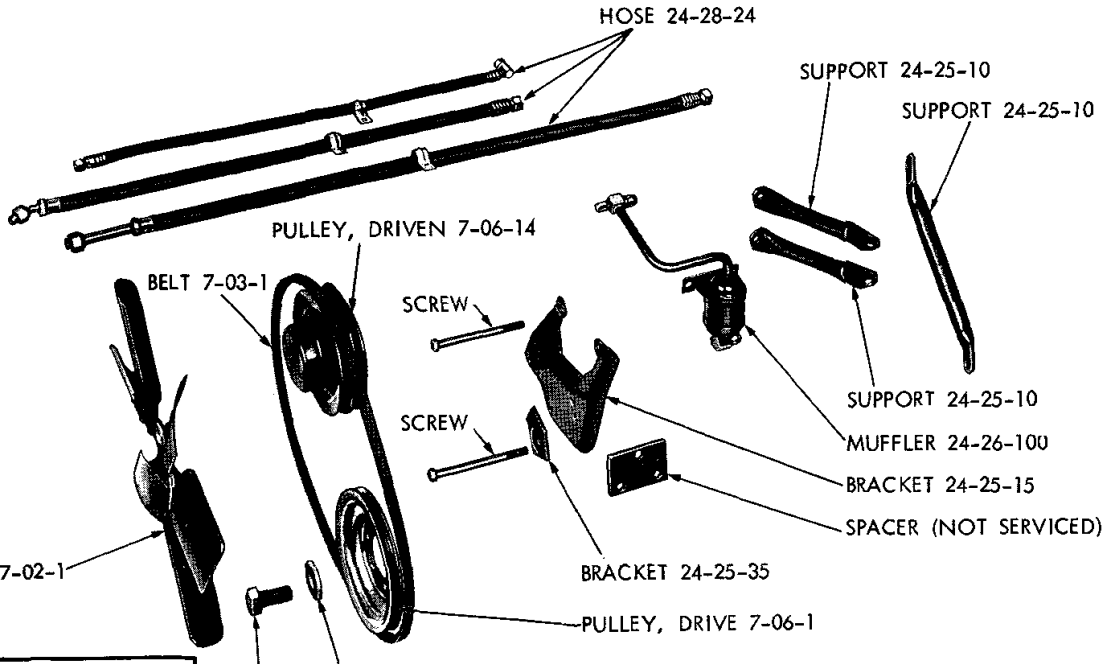

PARTS INDICATED BY NAME ONLY - ORDER BY DESCRIPTION

19a0341

MyMopar.com

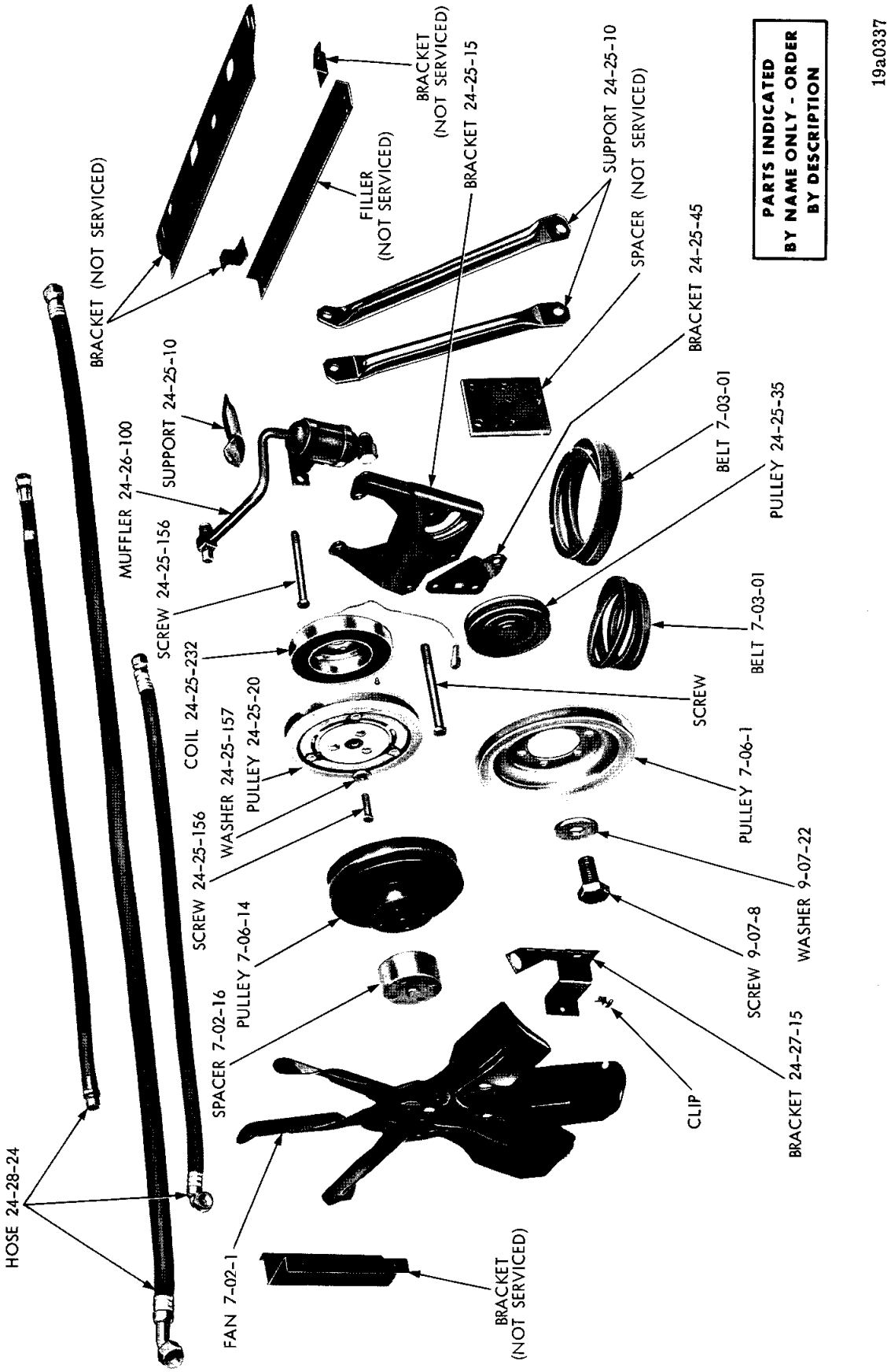

AIR CONDITIONING ADAPTER PACKAGE (MODEL K) - BELVEDERE AND CORONET (225 CU. IN. ENGINE)

MyMopar.com

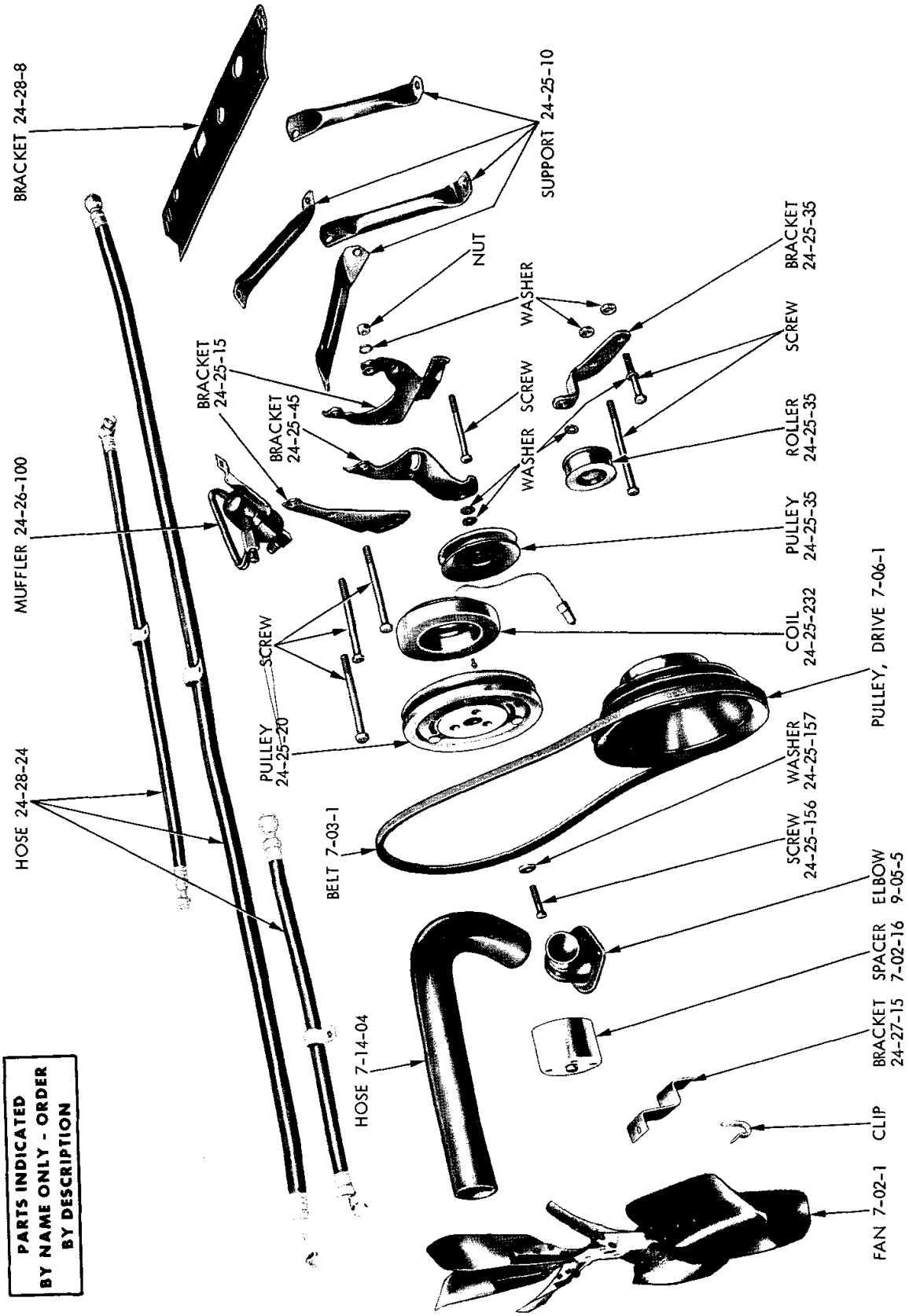

AIR CONDITIONING ADAPTER PACKAGE (MODEL K) - PLYMOUTH, BELVEDERE AND CORONET (273 AND 318 CU. IN. ENGINE)

MyMopar.com

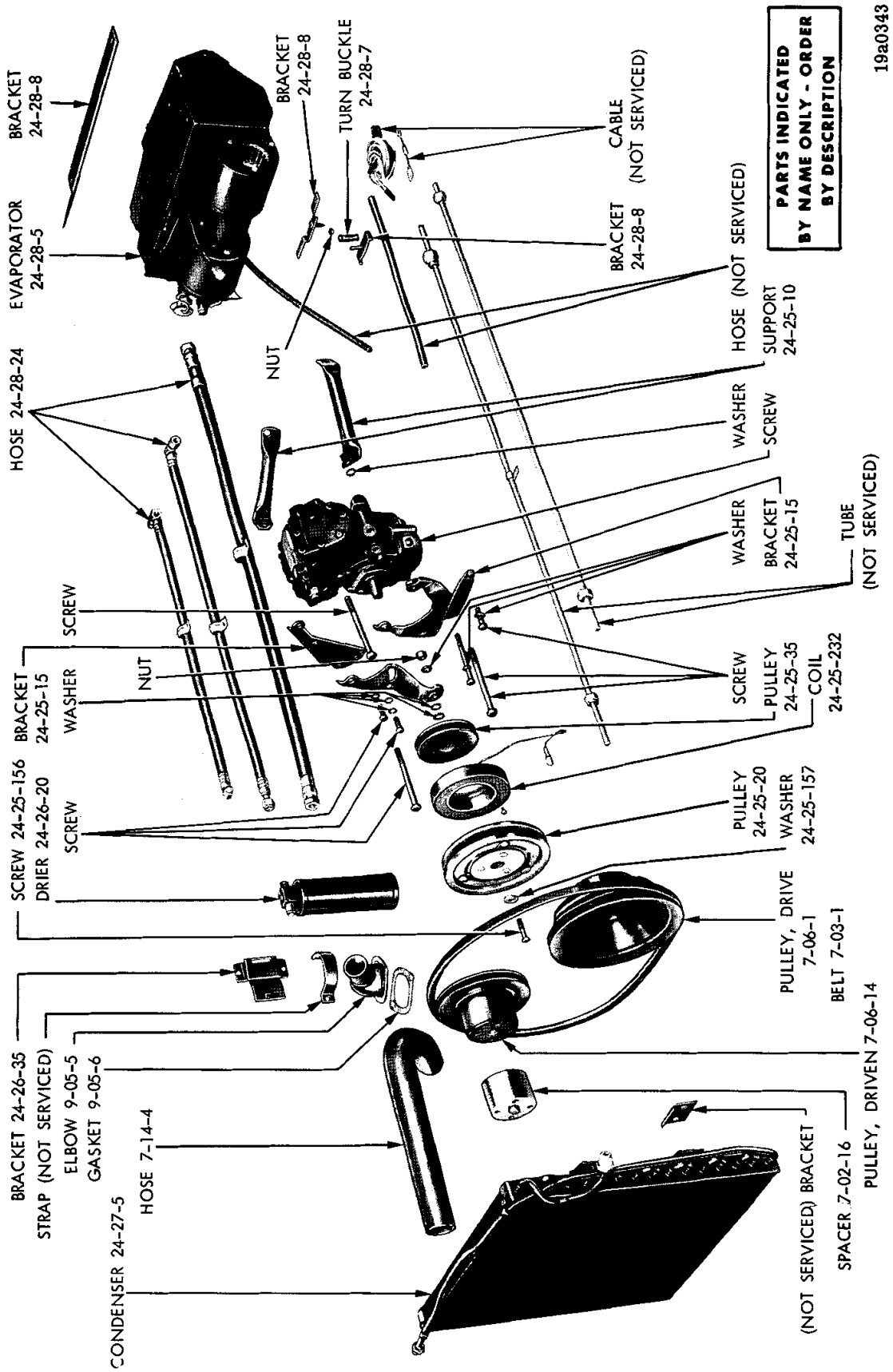

AIR CONDITIONING ADAPTER PACKAGE (MODEL K) - BELVEDERE, SATELLITE AND CORONET (361, 383 CU. IN. ENGINE); PLYMOUTH, DODGE AND CHRYSLER (383 CU. IN. ENGINE)

MyMopar.com

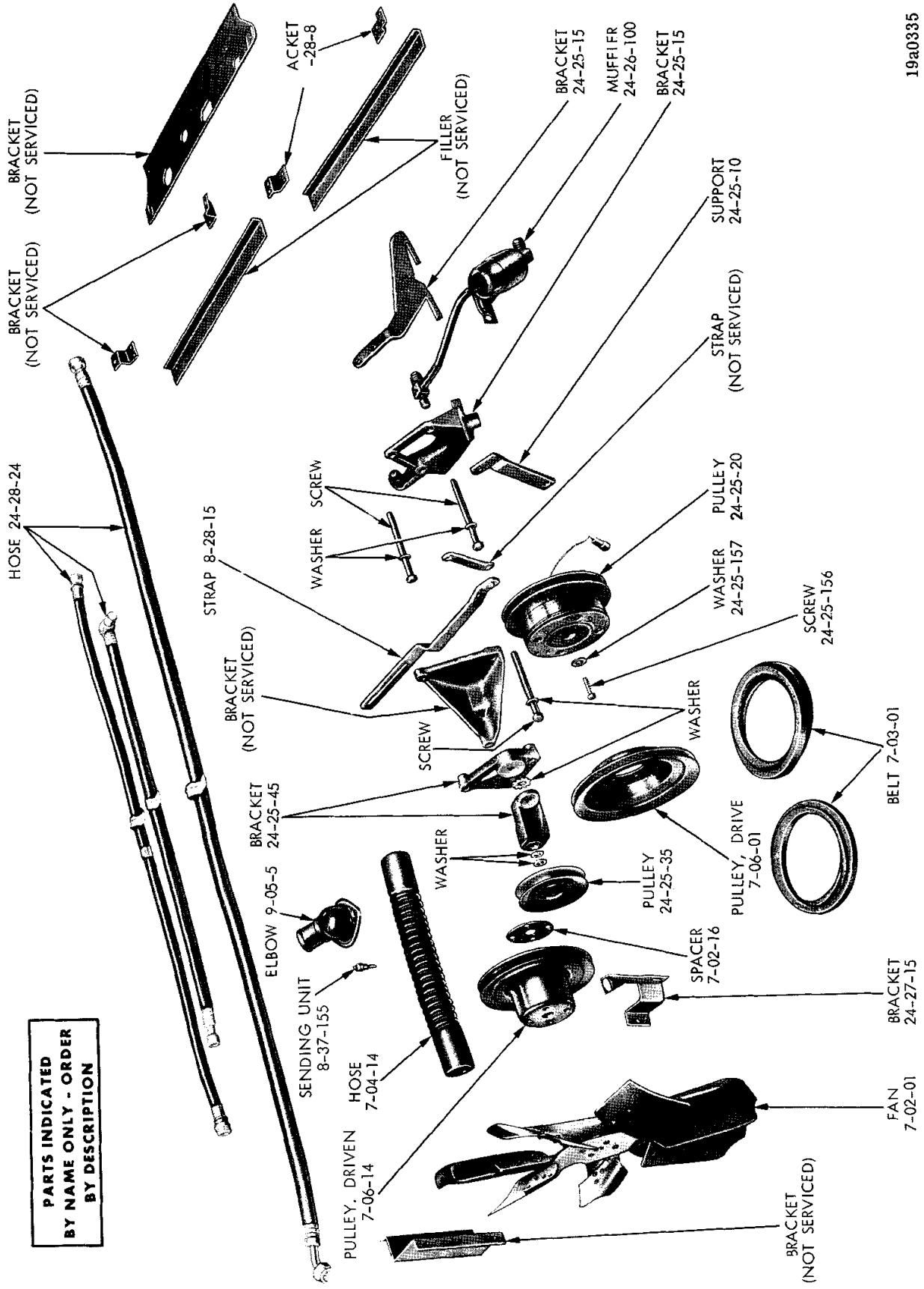

AIR CONDITIONING ADAPTER PACKAGE (MODEL K) - BELVEDERE, SATELLITE, CORONET AND CHRYSLER (361 AND 383 CU. IN. ENGINE)

MyMopar.com

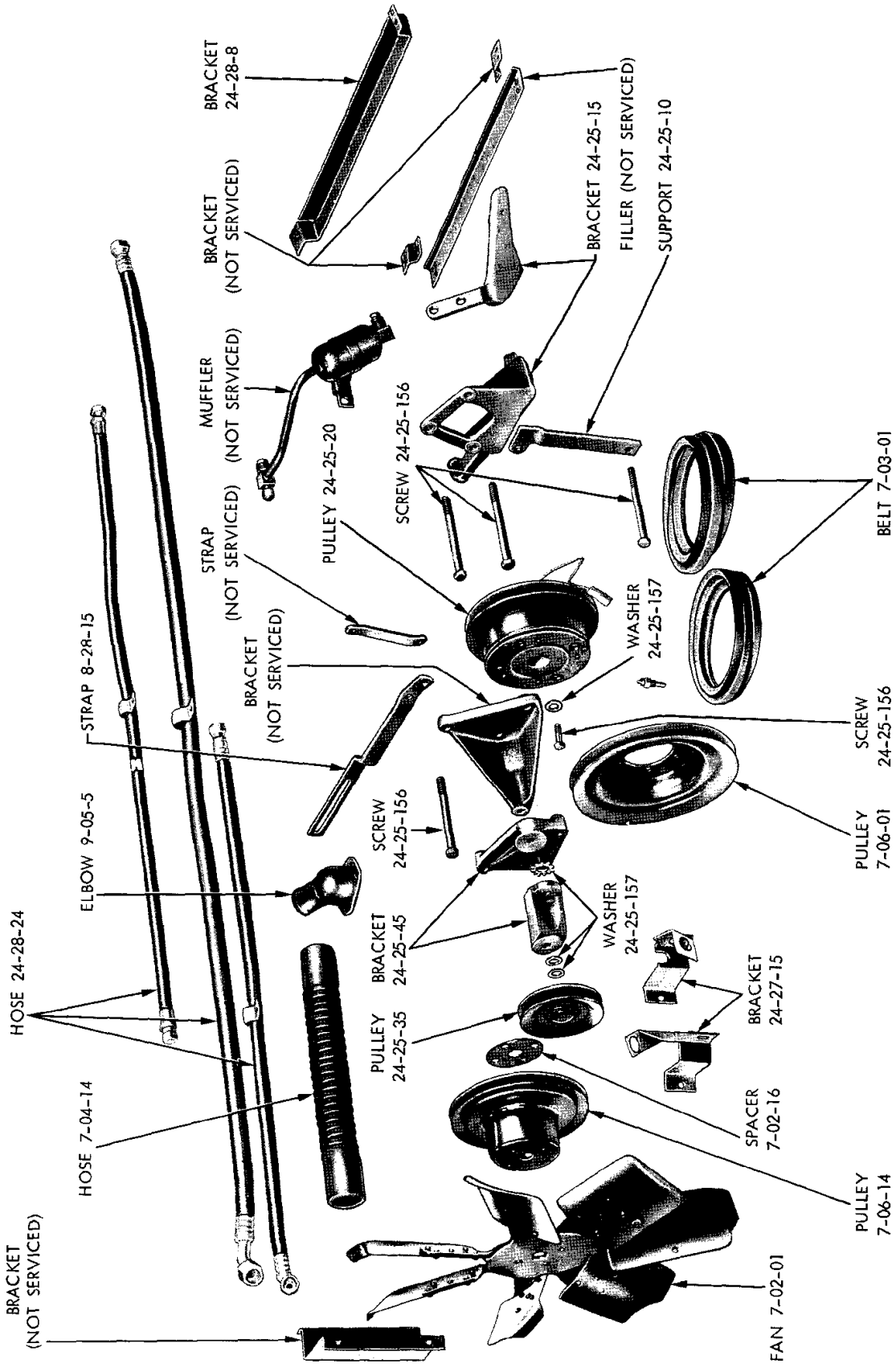

19a0339

AIR CONDITIONING ADAPTER PACKAGE (MODEL K) - CHRYSLER AND IMPERIAL (413 CU. IN. ENGINE)

MyMopar.com

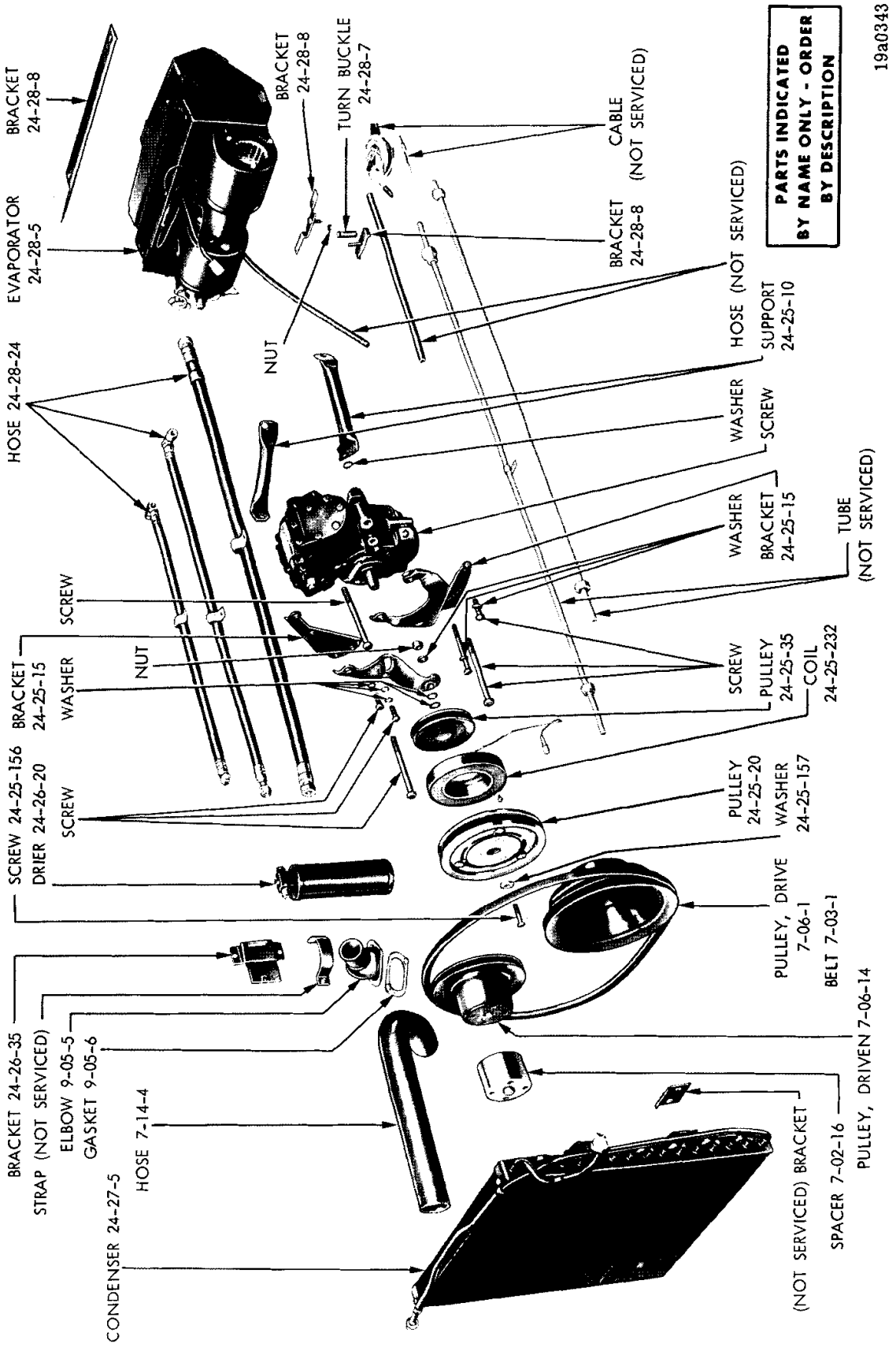

AIR CONDITIONING SYSTEM (MODEL P) - VALIANT AND DART (273 CU. IN. ENGINE)

MyMopar.com

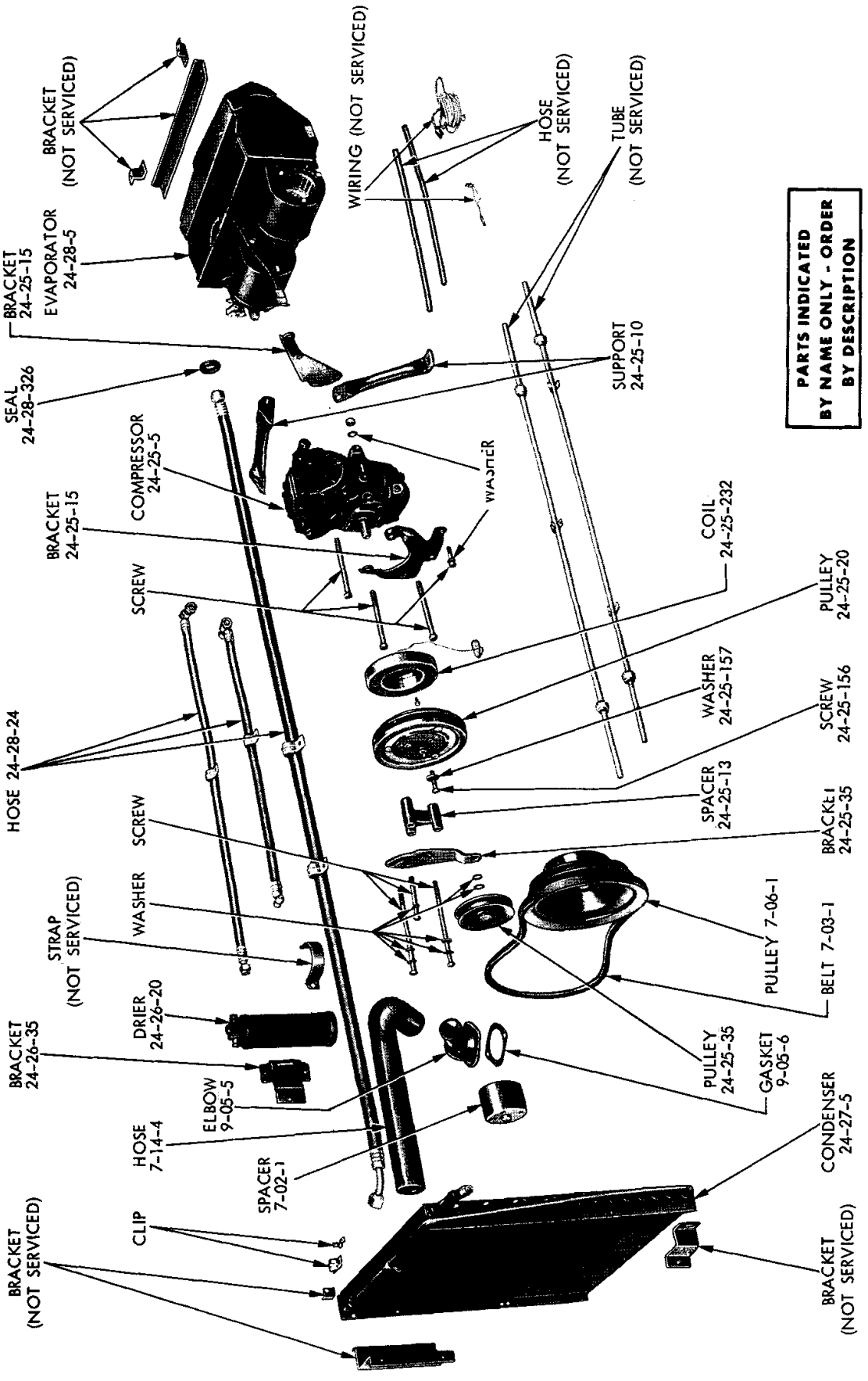

AIR CONDITIONING SYSTEM (MODEL P) - PLYMOUTH (318 CU. IN. ENGINE)

MyMopar.com

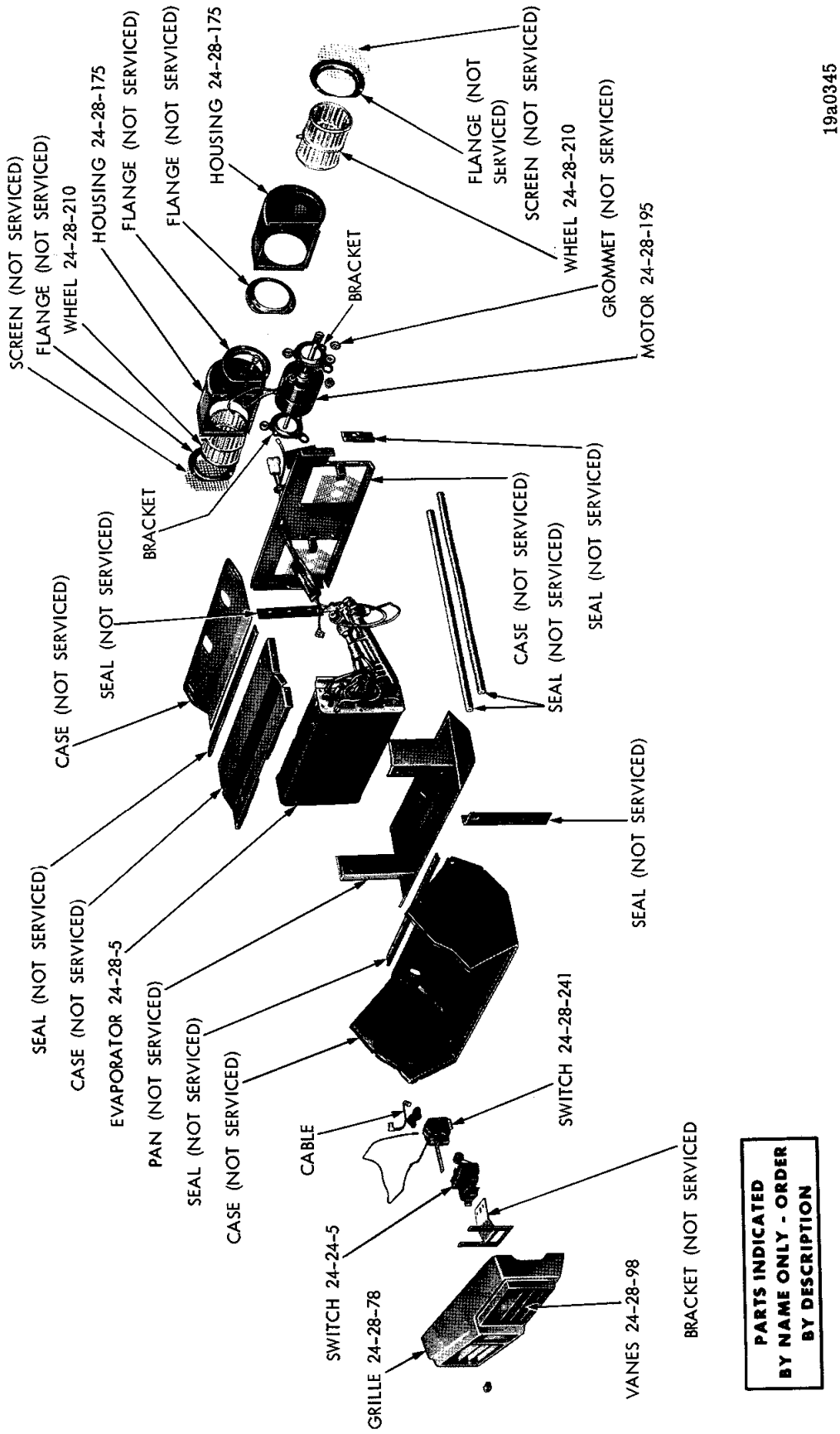

AIR CONDITIONING EVAPORATOR (MODEL P) - COOL COMFORT

MyMopar.com

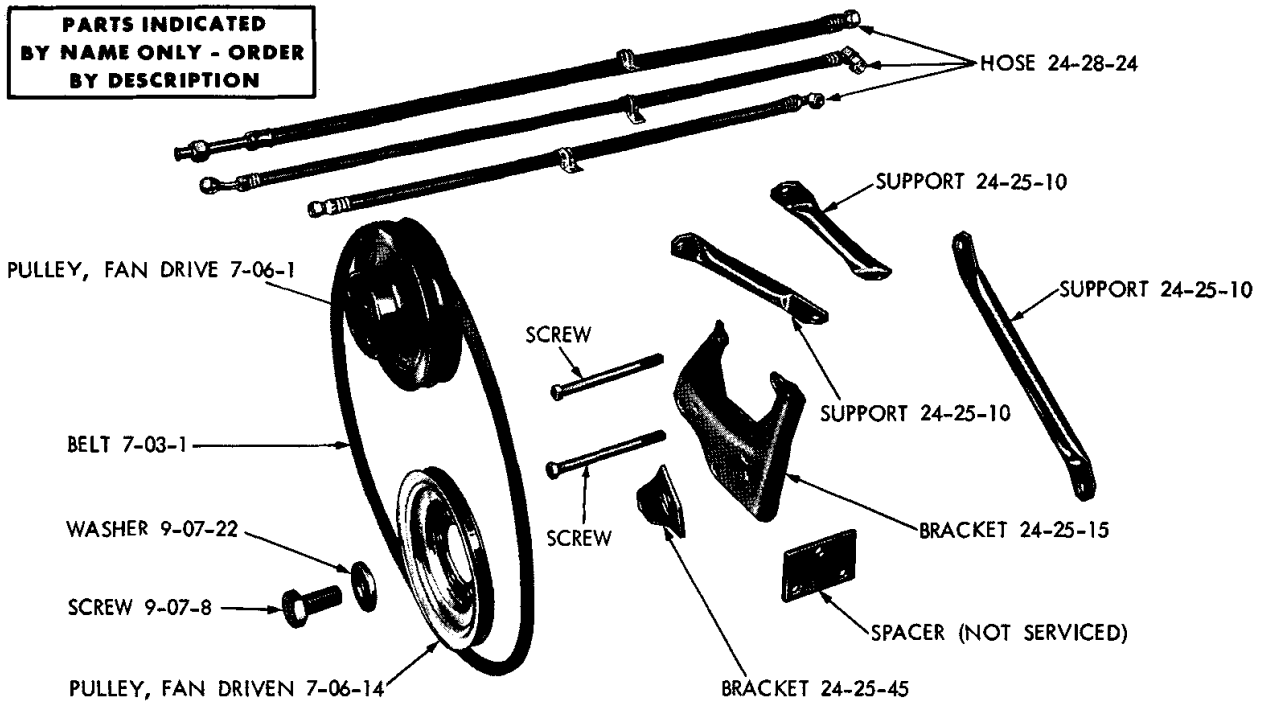

AIR CONDITIONING ADAPTER PACKAGE (MODEL P) - VALIANT AND DART (170 CU. IN. ENGINE)

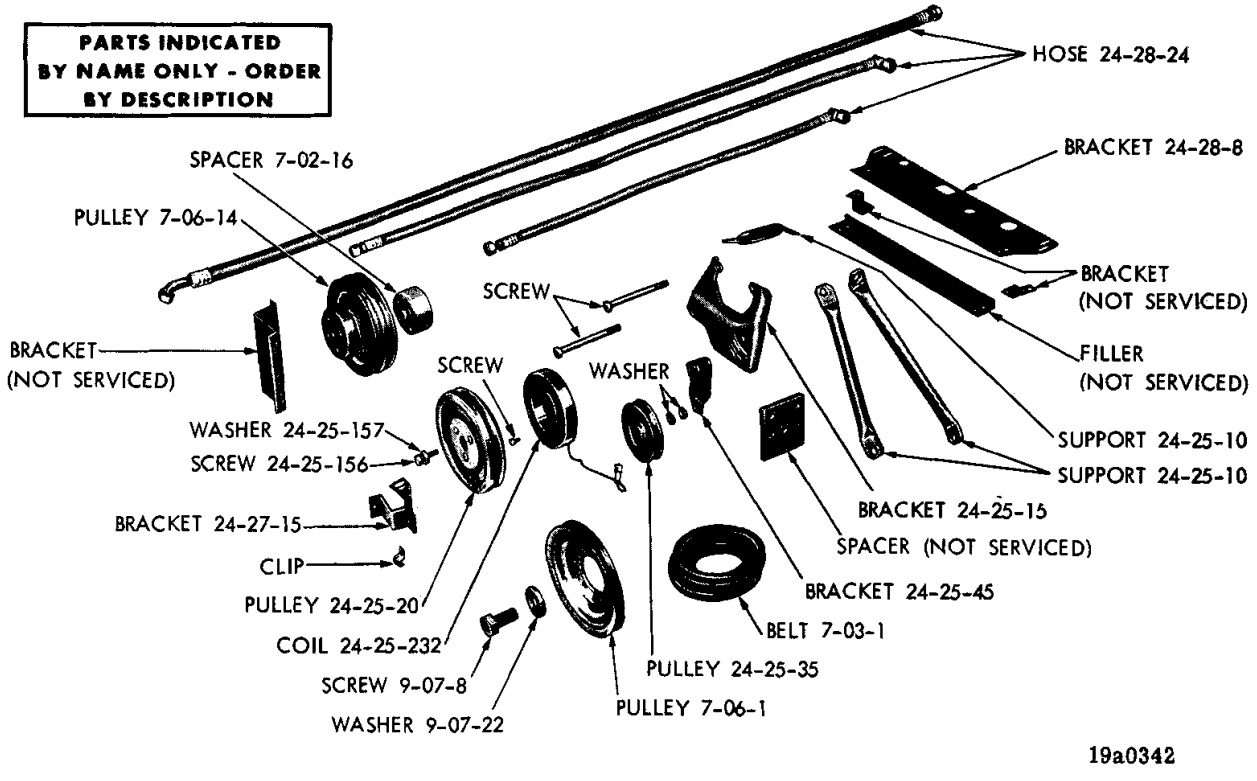

AIR CONDITIONING ADAPTER PACKAGE (MODEL P) - BELVEDERE AND CORONET (225 CU. IN. ENGINE)

MyMopar.com

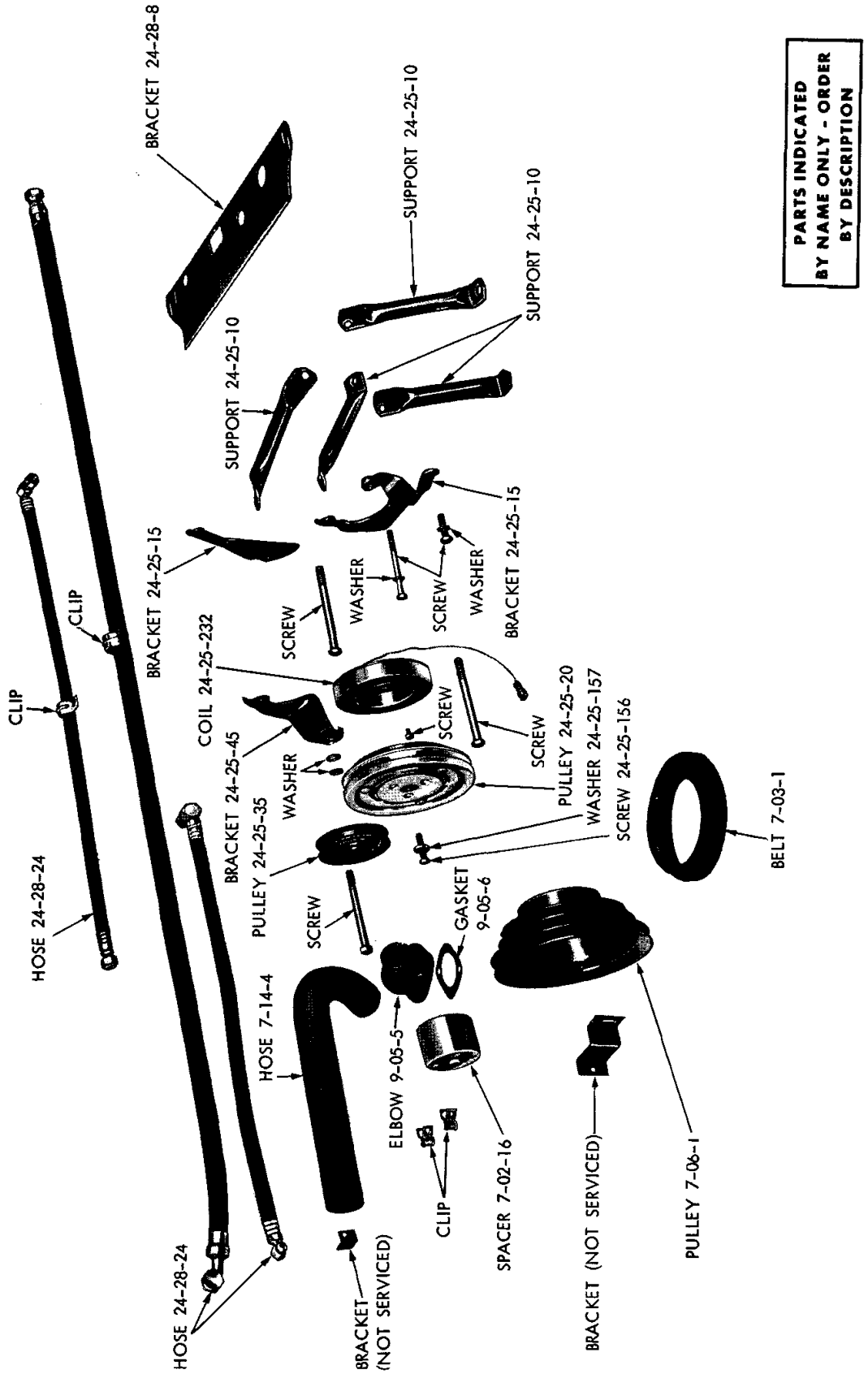

PARTS INDICATED BY NAME ONLY - ORDER BY DESCRIPTION

19a0347

AIR CONDITIONING ADAPTER PACKAGE (MODEL P) - BELVEDERE, SATELLITE AND CORONET (273 AND 318 CU. IN. ENGINE)

MyMopar.com

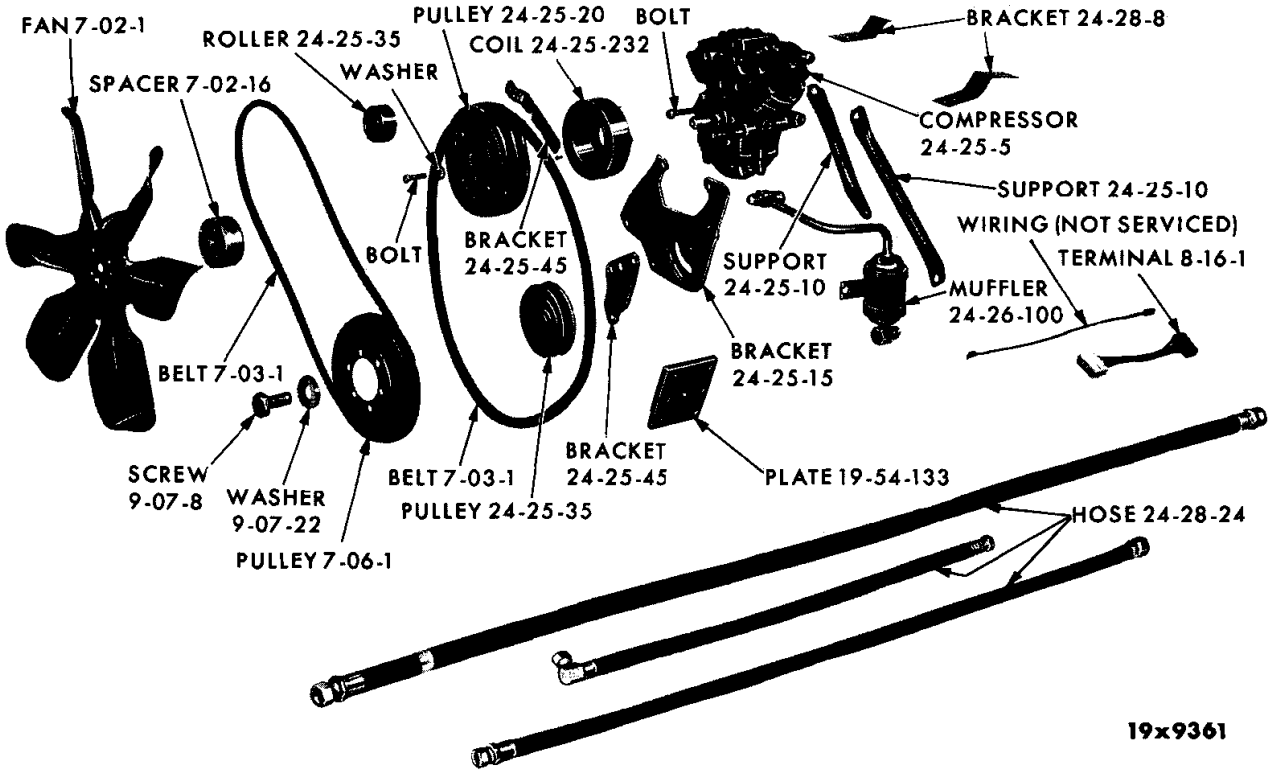

AIR CONDITIONING ADAPTER PACKAGE

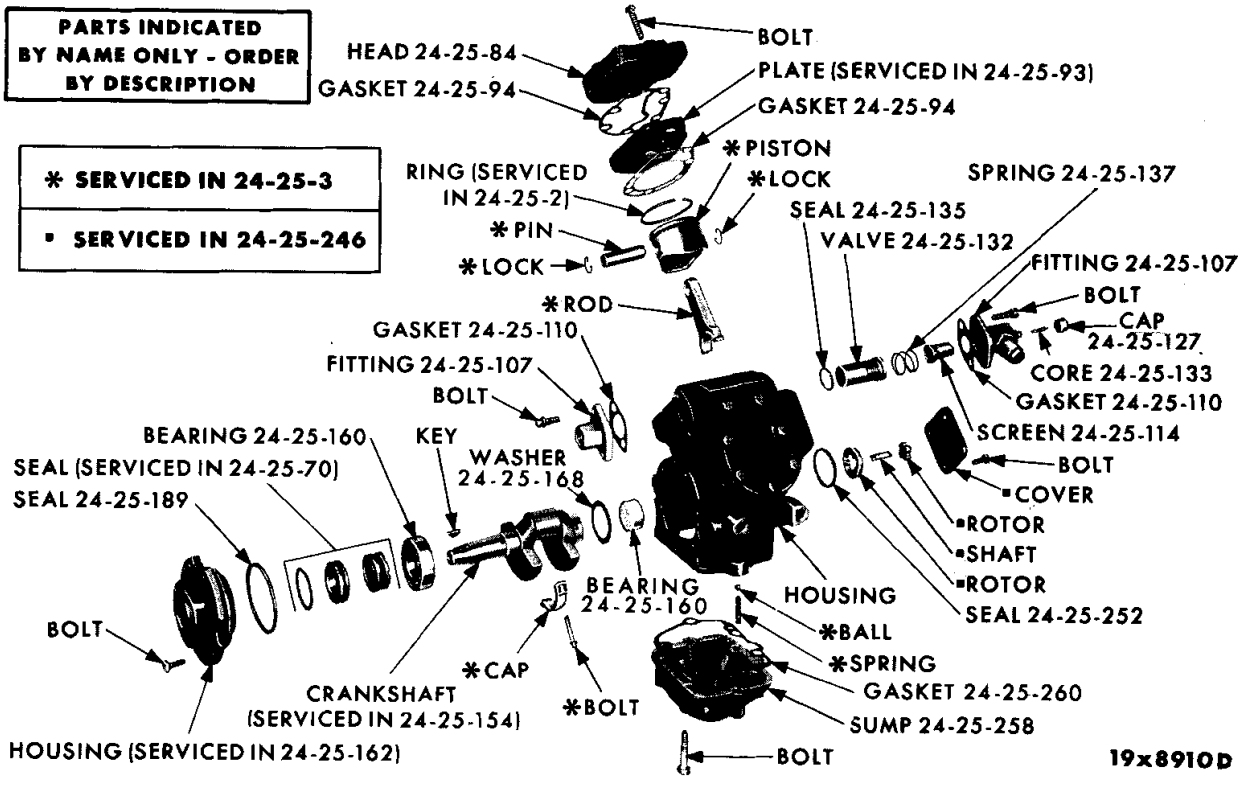

AIR CONDITIONING COMPRESSOR

MyMopar.com

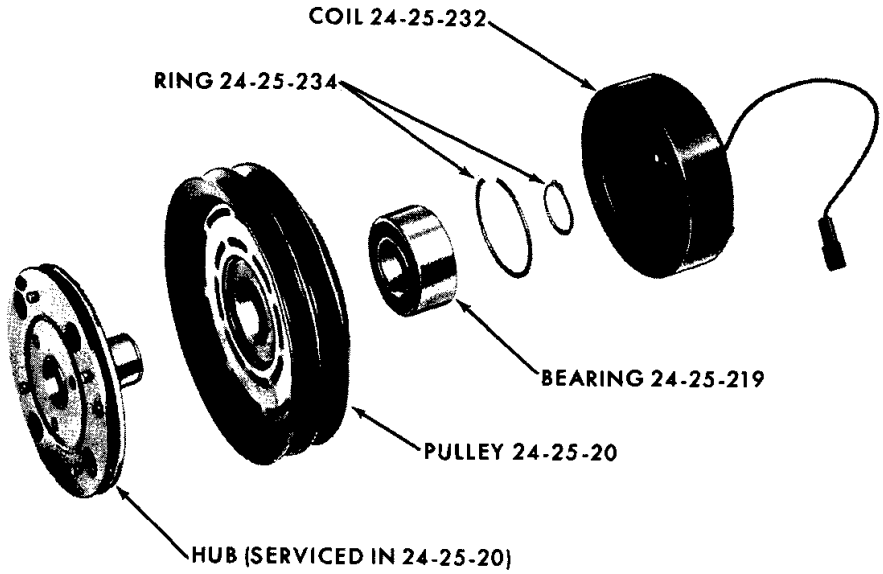

19x9359

COMPRESSOR CLUTCH

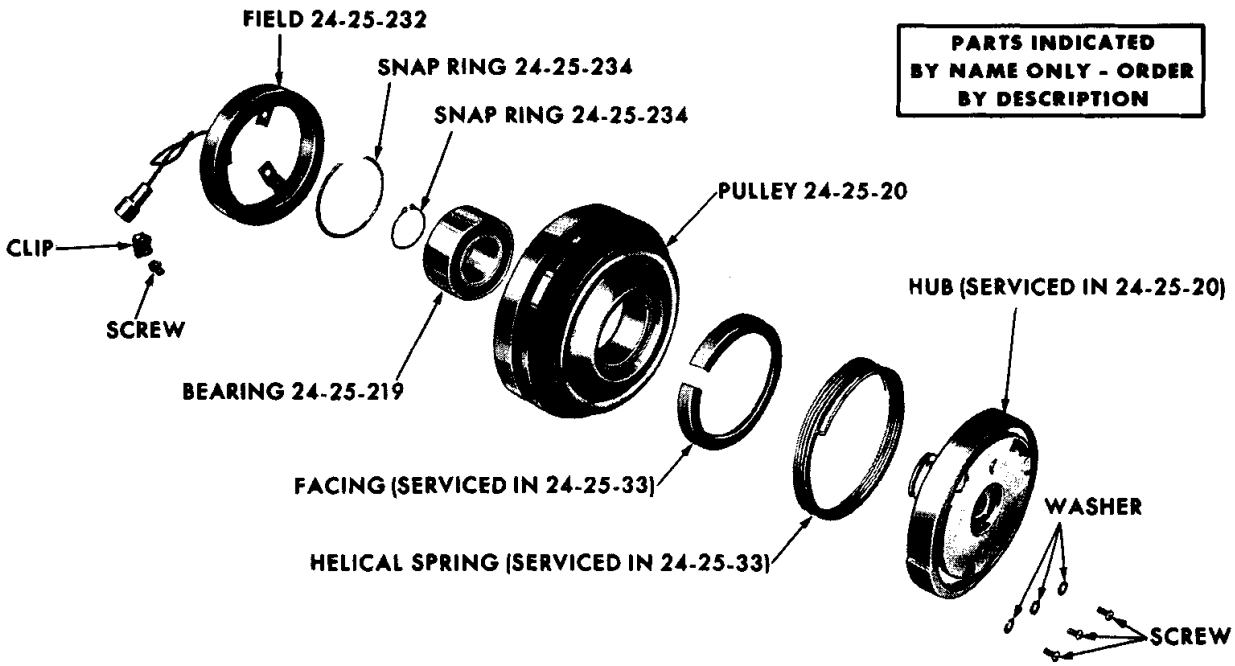

19x9942

AIR CONDITIONING HELI-GRIP CLUTCH

MyMopar.com

NOTES

MyMopar.com

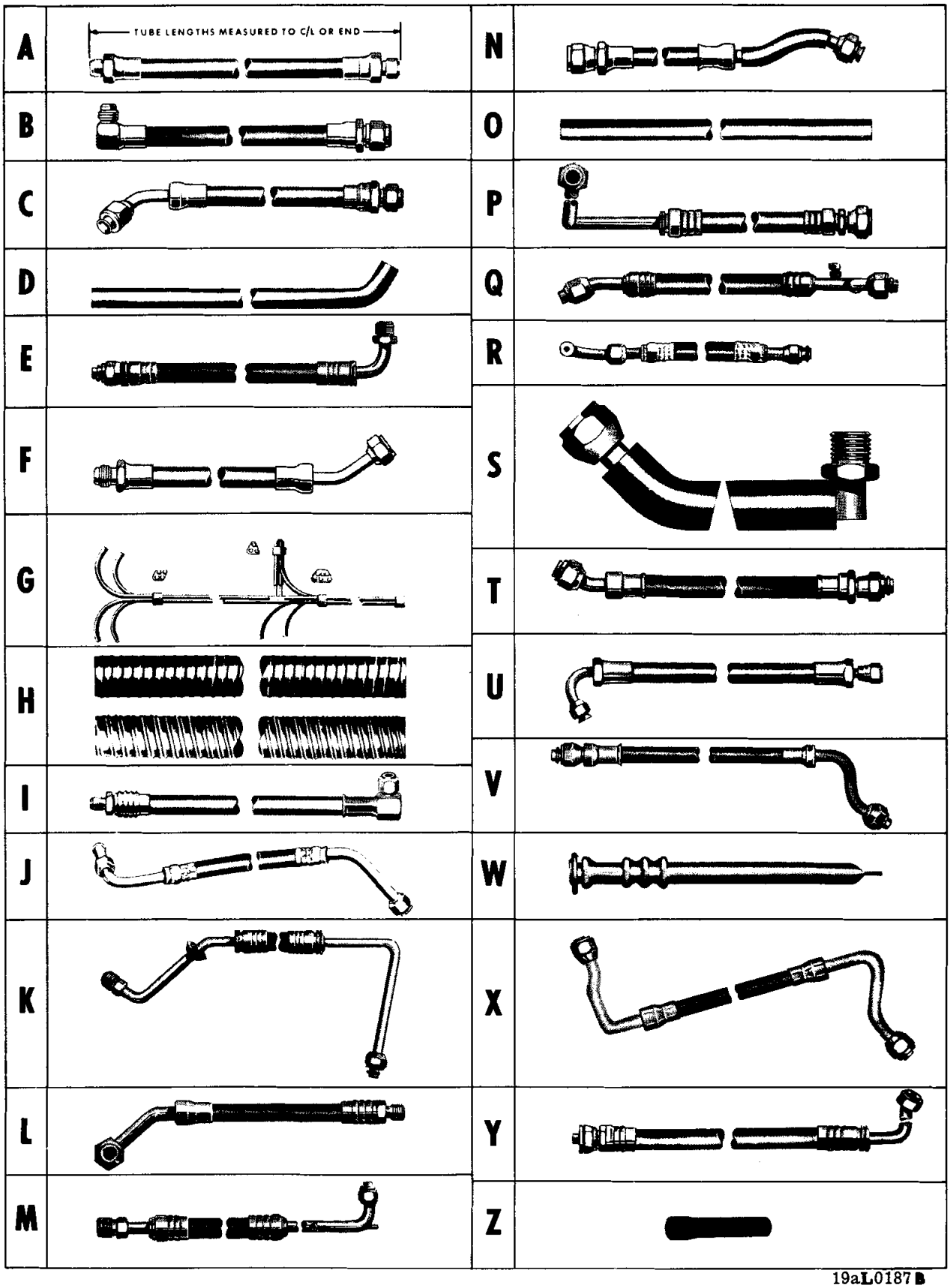

19aL0187B

AIR CONDITIONING HOSE CHART

MyMopar.com

AIR CONDITIONING HOSE CHART

TYPE	PART NUMBER	LENGTH	HOSE OUTSIDE DIA.	THREAD DIAMETER	LOCATION
A	2277 646	19 in.	3/4 in.	5/8"-18	W1, W2, R1, R2, Liquid Hose to Expansion Valve
	2277 431	23 in.	7/8 in.	3/4"-16	W1, W2, R1, R2, Muffler to Discharge Tube
	2485 716	20 in.	3/4 in.	5/8"-18	P1, P2, C1, C2, C3, Liquid Tube to Expansion Valve
	2521 225	67 1/2 in.	1 1/8 in.	7/8"-14	Y1, Suction, Under Body to Muffler
	2521 847	30 in.	3/4 in.	5/8"-18	Y1, Liquid Tee to Under Body
	2521 858	64 in.	1 in.	7/8"-14	Y1, Suction Muffler to Underbody Tube
B	2521 775	22 in.	1 in.	1 1/16"-14	P1, Suction Muffler to Compressor
	2521 850	14 1/2 in.	1 in.	1 1/16"-14	P2, D2, Suction Muffler to Compressor
	2009 256	21 in.	3/8 in.	3/4"-18	Discharge, V2, L2, W2, P2, Model K
C	2521 415	29 in.	1 in.	7/8"-14	P2, D2, C1, C3, Underbody Tube to Suction Tee
	2277 957	35 in.	1 in.	3/4"-16	Discharge, V, L, Model K
D	2096 932	46 in.	1 in.	---	R2, W2, P2, D2, Heater Core to Pump
	2096 932	46 in.	1 in.	---	R2, W2, P2, Engine to Water Valve
	2096 932	46 in.	1 in.	---	V2, L2, W2, R2, P2, Engine to Water Valve
	1595 160	29 in.	1 in.	---	R2, W2, P2, Engine to Water Valve
	2277 425	50 in.	1 in.	---	R1, W1, Core to Pump
	1779 885	12 in.	1 in.	---	R, W, Water Valve to Heater Core
E	2521 766	32 1/4 in.	3/4 in.	1 1/16"-14	P1, P2, C1, C3, Liquid Tee to Underbody Tube
F	2485 715	15 in.	1 in.	3/4"-16	Y1, Discharge Muffler to Tube
G	2587 091	---	---	---	V1, V2, L1, L2, Vacuum Control, w/Connections
	2291 878	---	---	---	Y1, Vacuum Control, w/Connections
	2291 877	---	---	---	Y1, Fresh Air Door Control
	2277 228	---	---	---	W1, W2, R1, R2, Vacuum Selector Switch, w/4 Leads
	2496 011	---	---	---	W1, W2, R1, R2, Vacuum Control, w/Elbow and Tees, 7 Connections
	2496 012	---	---	---	W1, W2, R1, R2, Vacuum Control, Fresh Air Door, 3 Leads
	2580 687	---	---	---	P1, P2, D2, C1, C2, C3, Vacuum Control, w/Connectors
H	2485 280	29 in.	3 in.	---	R1, R2, W1, W2, Spot Cooler, Right
	1658 630	33 in.	3 in.	---	R1, R2, W1, W2, Spot Cooler, Left
	1689 313	52 in.	2 1/4 in.	---	Y1, Spot Cooler, Right and Left
	2485 551	12 1/4 in.	3 1/4 in.	---	Y1, Air Outlet, Right
	2197 020	18 in.	3 1/4 in.	---	Y1, Air Outlet, Left
	2485 615	8 1/2 in.	5 1/2 in.	---	Y1, Air Outlet, w/Clamp, Rear Unit
	2485 923	19 1/4 in.	5 1/2 in.	---	Y1, Air Inlet, w/Clamp, Rear Unit, Right
	2485 924	23 1/4 in.	5 1/2 in.	---	Y1, Air Inlet, w/Clamp, Rear Unit, Left
	2521 245	33 3/4 in.	3 in.	---	C1, C2, C3, Spot Cooler, Left
	2521 477	28 in.	2 1/2 in.	---	V1, V2, L1, L2, Defroster, Left
	2521 476	21 1/2 in.	2 1/2 in.	---	V1, V2, L1, L2, Defroster, Right
	2521 386	15 in.	2 1/2 in.	---	P1, D2, C1, C2, C3, Spot Cooler, Right
	2521 385	27 1/2 in.	3 in.	---	D2, Spot Cooler, Left
	2521 699	15 in.	2 1/2 in.	---	P1, P2, D2, C1, C2, C3, Defroster
	2277 901	13 in.	3 9/16 in.	---	R1, R2, W1, W2, Air Outlet to Connector
I	2485 719	29 in.	7/8 in.	5/8"-18	Y1, Liquid, Rear Evaporator to Under Body Tube
	2521 860	29 in.	3/4 in.	5/8"-18	Y1, Liquid, Rear Unit to Under Body Tube
J	2277 429	33 1/2 in.	1 in.	7/8"-14	R1, R2, W1, W2, Suction, Evaporator to Muffler
	2521 783	37 in.	1 in.	7/8"-14	P1, P2, Suction, Muffler to Underbody Tube
	2521 821	33 in.	1 in.	7/8"-14	R1, W1, R2, W2, Suction, Evaporator to Compressor
	2521 161	34 in.	1 in.	3/4"-16	P1, P2, D2, C1, C2, C3, Heater Discharge
K	2521 777	8 1/2 in.	3/4 in.	5/8"-18	P1, P2, Liquid, Rear Unit to Under Body Tube
	2521 776	48 1/4 in.	1 1/4 in.	7/8"-14	P, D, C, Suction, Rear Unit to Underbody
L	2521 820	31 in.	1 in.	7/8"-14	Y1, Suction, Rear Unit to Under Body Tube
M	2521 759	52 1/2 in.	1 in.	1 1/16"-14	P2, D2, C1, C3, Suction Evaporator to Tee
N					
O	2405 462	6 1/2 in.	1/2 in.	---	R1, R2, W1, W2, Vacuum Control to Thermostat
	2097 131	62 in.	5/8 in.	---	P1, P2, D2, C1, C3, Drain, Roof Unit
	2219 706	6 3/4 in.	5/16 in.	---	Y1, Evaporator Drain
	1315 466	---	---	---	Valve to Heater, Heater to Pump, 50 ft. Roll
	2521 817	28 in.	1 in.	7/8"-14	Y1, Suction, Evaporator to Muffler
P	2521 760	2 1/2 in.	3/4 in.	5/8"-18	Y1, Liquid Tube to Expansion Valve
Q	2521 792	29 1/2 in.	1 1/8 in.	1 1/16"-14	V1, V2, L1, L2, Suction Evaporator to Compressor
	2521 757	35 in.	3/4 in.	1 1/16"-14	P, D, Suction, Evaporator to Muffler
	2521 792	22 1/4 in.	1 in.	1 1/16"-14	V1, L1, Suction, Evaporator to Compressor
	2521 899	26 3/4 in.	1 in.	1 1/16"-14	V2, L2, Suction, Evaporator to Muffler
R	2277 903	44 in.	1 in.	7/8"-14	R2, W2, Suction, Evaporator to Muffler
S	2277 665	4 1/2 in.	---	3/4"-16	R1, W1, Evaporator Valve to Unit
T					
U	2521 763	20 in.	1 in.	3/4"-16	P2, D2, Muffler to Discharge Tube
	2485 968	20 1/4 in.	1 in.	7/8"-14	Y1, Suction, Muffler to Compressor
	2521 863	17 1/4 in.	1 in.	3/4"-16	R2, W2, Discharge, Muffler to Condenser
	2485 158	19 1/4 in.	1 in.	3/4"-16	R2, W2, Discharge, Muffler to Condenser
V	2485 969	13 1/2 in.	1 in.	---	Y1, Suction, Evaporator to Muffler
W	1971 913	6 3/4 in.	---	---	Y1, Evaporator Drain
X	2521 828	39 1/2 in.	1 in.	3/4"-16	V2, L2, Muffler to Condenser
Y	2521 791	9 1/2 in.	3/4 in.	5/8"-18	V1, V2, L1, L2, Expansion Valve to Receiver Drier
Z	2521 753	55 1/2 in.	1/2 in.	---	P1, P2, D2, C1, C3, Evaporator Drain, Left

MyMopar.com

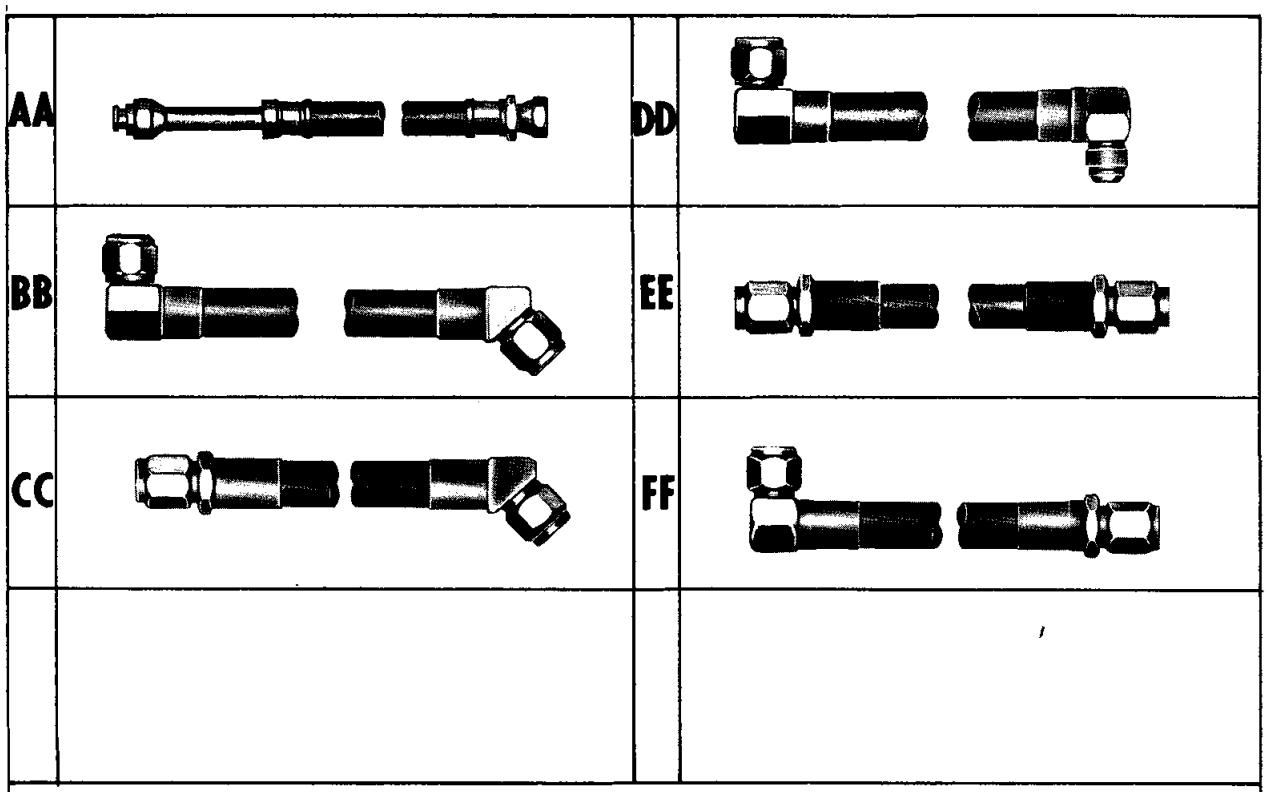

AIR CONDITIONING HOSE CHART

TYPE	PART NUMBER	LENGTH	HOSE OUTSIDE DIA.	THREAD DIAMETER	LOCATION
AA	2485 009	46 1/2 in.	1 in.	7/8"-14	Suction, V1, L1, Model K, P
BB	2013 778	42 in.	3/8 in.	3/4"-16	Discharge, V, L, Model P
	2004 790	70 in.	5/8 in.	7/8"-14	P, D, C, Y, Discharge Muffler to Condenser
CC	2004 790	70 in.	5/8 in.	7/8"-14	Suction, R, W, P, C, Y, Model K, P
DD	2013 770	25 in.	3/8 in.	3/4"-16	Discharge, V2, L2, R2, W2, P2, Model P
	2013 092	32 in.	3/8 in.	5/8"-18	V, R, W, P, C, Y, Liquid
EE	2013 687	41 in.	5/8 in.	7/8"-14	Suction, V2, L2, Model K, P
	2009 251	43 in.	3/8 in.	5/8"-18	Discharge, R, W, P, C, Y, Model K
	2009 251	43 in.	3/8 in.	5/8"-18	P, D, C, Y, Discharge Muffler to Condenser
FF	2013 775	48 in.	3/8 in.	5/8"-18	Discharge, R, W, P, D, C, Model P

19a0321B

MyMopar.com

24-01-0 AIR CONDITIONING

NOTE: Model R Custom Trunk Unit Air Conditioning use with AR, AW Equipped with Straight Stick and Console.

CODE	PART NAME AND DESCRIPTION	CYL	PER CAR	VALIANT / DART	PLYMOUTH BELVEDERE / DODGE CORONET	PLYMOUTH FURY / DODGE POLARA / CHRYSLER	IMPERIAL
24-01-1	AIR CONDITIONING BASIC PACKAGE,						
	Model K		1	2584 912	2584 915	2584 915	2584 915
	Model P		1	2585 001	2584 983	2584 983	
	Model R	8	1	---- ---	2584 988	2584 988	
	Taxi, P, D.		1	---- ---	---- ---	⊟2586 616	
	ADAPTER PACKAGE, w/170, 225 cu. in Eng.,						
	Model K	6	1	*2584 914			
	w/225 cu. in. Eng., Model K	6	1	---- ---	2584 920	*2584 920	
	w/273 cu. in. Eng., Model K	8	1	2584 913	2584 918		
	w/318 cu. in. Eng., Model K, except D2	8	1	---- ---	2584 918	2585 916	
	w/361, 383, cu. in. Eng., Model K	8	1	---- ---	2584 917	2584 917	
	w/413 cu. in. Eng., Model K	8	1	---- ---	---- ---	2584 919	2584 919
	w/170, 225, cu. in. Eng., Model P	6	1	2585 003			
	w/273 cu. in. Eng., Model P	8	1	2585 002			
	w/225 cu. in. Eng., Model P	6	1	---- ---	2584 987	2584 987	
	w/273, 318, cu. in. Eng., Model P	8	1	---- ---	2584 986	2584 984	
	w/361, 383, cu. in. Eng., Model P	8	1	---- ---	2584 985		
	w/383 cu. in. Eng., Model P, C1, C2	8	1	---- ---	2584 985	2584 985	
	w/273, 318, cu. in. Eng., Model R	8	1	---- ---	2584 989		
	w/361, 383, cu. in. Eng., Model R	8	1	---- ---	2584 990	---- ---	
	w/225 cu. in. Eng., Taxi, P, D	6	1	---- ---	---- ---	⊟2586 713	
	w/273 cu. in. Eng., Taxi, P, D.	8	1	---- ---	---- ---	⊟2586 716	
	w/318 cu. in. Eng., Taxi, P, D.	8	1	---- ---	---- ---	⊟2586 715	
24-01-16	BRACKET, Water Valve, Model 952		1	---- ---	2277 207		
24-01-18	HOUSING, Heater Control, Front Unit,						
	Model 953, D		1	---- ---	---- ---	2497 863	
	COVER, Heater Core, Front Unit, Model 912		1	---- ---	---- ---	---- ---	2485 735
24-01-22	NUT, Water Valve to Bracket		1	2277 216	2277 216		
24-01-24	CORE, Heater, Model 954		1	2277 535			
	Model 952		1	---- ---	2277 193		
	Model 953		1	---- ---	---- ---	2521 117	
	Model 912		1	---- ---	---- ---	---- ---	1879 904
24-01-26	SEAL, Heater Core Tube to Housing,						
	Front Unit		1	---- ---	---- ---	---- ---	1604 116
	Core to Heater		1	---- ---	---- ---	2277 648	
	RETAINER, Heater Core Tube Seal		1	2485 135			
24-01-31	SLEEVE, Engine to Water Valve Hose, P		1	---- ---	---- ---	2127 280	
24-01-33	RETAINER, Air Outlet Lever, Roof Unit		1	---- ---	---- ---	1689 670	
24-01-35	LEVER, Water Valve Link, Front Unit		1	---- ---	---- ---	2521 243	
24-01-36	VALVE, Water, Model 954		1	2521 879			
	Model 952		1	---- ---	2277 123		
	Model 953		1	---- ---	---- ---	2521 240	
	VALVE, Temperature Control, includes						
	BRACKET, Model 953		1	---- ---	---- ---	2521 672	
	Model 912		1	---- ---	---- ---	---- ---	1972 781
	Model 952		1	---- ---	2521 672		

TYPE LETTERS Indicate: V - Valiant, L - Dart, R - Belvedere, W - Coronet, P - Plymouth, D - Dodge, C - Chrysler, Y - Imperial

★Indicates use as required. Numerals in parentheses ( ) refer to notes. Printed in U.S.A.

⊟Indicates parts not listed in any previous parts book. Prices and specifications subject to change without notice.

* Indicates change or addition. March 1966 Supersedes May 1965.

MyMopar.com

CODE	PART NAME AND DESCRIPTION	CYL	PER CAR	VALIANT / DART	PLYMOUTH BELVEDERE / DODGE CORONET	PLYMOUTH FURY / DODGE POLARA / CHRYSLER	IMPERIAL
24-01-0	**AIR CONDITIONING - Cont'd**						
24-01-38	ROD, Water Valve Control, Model 953		1	---- ---	---- ---	2521 246	
	CLIP, Lower		1	---- ---	---- ---	2465 560	
	Upper		1	---- ---	---- ---	6000 394	
24-01-44	COVER, Control Housing, Model 953, D	8	1	---- ---	---- ---	2497 869	
24-01-65	CABLE, Temperature Control, Front Unit, 24 1/4" lgh., Model 954		1	2497 643			
	Front Unit, 25" lgh., Model 954		1	2521 479			
	Front Unit, 44" lgh., Model 953		1	---- ---	---- ---	2580 861	
	Front Unit, 42 3/4" lgh., Model 912		1	---- ---	---- ---	---- ---	2580 864
	Front Unit, 22" lgh., Model 952		1	---- ---	2587 450		
	CLIP, Temperature Control Cable		1	---- ---	---- ---	6015 143	
24-01-87	NIPPLE, Heater Hose Inlet		1	1971 061	1971 061	1971 061	1971 061
	Heater Hose Return		1	1779 257	1779 257	1779 257	1779 257
24-24-0	**CONTROL**						
24-24-5	SWITCH, Blower, Front Unit, Model 954		1	*2497 006			
	Motor Speed Control, Model 954		1	2521 952			
	Blower, w/RESISTOR Model K		1	2013 218			
	Blower, Front Unit, Model 953		1	---- ---	---- ---	*2497 758	
	Resistor By-Pass, Front Unit, Model 954		1	2521 494			
	Blower, Front Unit, Model 912		1	---- ---	---- ---	---- ---	*2497 255
	Blower, Front Unit, Model 952		1	---- ---	2427 181		
	Blower, Trunk and Roof Unit		1	---- ---	2291 095	2291 095	
	Resistor By-Pass, Front Unit, Model 953		1	---- ---	---- ---	2521 241	
	Trunk Unit, Model 902		1	---- ---	2291 095	2291 095	2291 095
	Blower, Front Unit, Model 953, D2		1	---- ---	---- ---	2496 986	
	Blower, Front Unit, Model 953, C	8	1	---- ---	---- ---	2496 379	
	Blower, Model K, P		1	*2013 218	*2013 218	*2013 218	*2013 218
24-24-10	CAM, Auxiliary Switch, Model 952		1	---- ---	2426 949		
24-24-20	KNOB, Blower Switch, Front Unit, Model 952, R		1	---- ---	2497 274		
	Front Unit, Model 952, W		1	---- ---	2497 444		
	Rear Unit, Model 902		1	---- ---	---- ---	2427 980	
	Rear Unit, Model 902		1	---- ---	---- ---	---- ---	2426 651
	Blower Switch, Roof Unit, P		1	---- ---	---- ---	2580 253	
24-24-39	CONTROL, Fresh Air Door Right, Model 953, P, D	8	1	---- ---	---- ---	2587 467	
	C, Model 953	8	1	---- ---	---- ---	2580 250	
			1	---- ---	*2661 992		
24-24-67	RESISTOR, Blower Motor, Front Unit, Model 952		1	---- ---	2277 187		
	Model 953		1	---- ---	---- ---	2521 153	
	Model 912		1	---- ---	---- ---	---- ---	1972 049
	Includes BRACKET, Model 912		1	---- ---	---- ---	---- ---	2427 867
24-24-68	GASKET, Resistor, Front Unit, Model 952		1	---- ---	2277 454		
24-24-124	WIRING, Front Unit, Model 954		1	2580 857			
	Model 952		1	---- ---	2427 719		
	Model 953, D2		1	---- ---	---- ---	2497 697	
	Model 953, P, C		1	---- ---	---- ---	2580 192	
	Model 912		1	---- ---	---- ---	---- ---	2497 795
	Model 912, w/Auto. Pilot		1	---- ---	---- ---	---- ---	2587 162
	WIRE, Fuse Block to Clutch, Model K, P		1	2014 005	2014 005	2014 005	2014 005

TYPE LETTERS Indicate: V - Valiant, L - Dart, R - Belvedere, W - Coronet, P - Plymouth, D - Dodge, C - Chrysler, Y - Imperial

★Indicates use as required. Numerals in parentheses ( ) refer to notes. Printed in U.S.A.
Indicates parts not listed in any previous parts book. Prices and specifications subject to change without notice.
March 1966 Supersedes May 1965. * Indicates change or addition.

MyMopar.com

CODE	PART NAME AND DESCRIPTION	CYL	PER CAR	VALIANT / DART	PLYMOUTH BELVEDERE / DODGE CORONET	PLYMOUTH FURY / DODGE POLARA / CHRYSLER	IMPERIAL
24-24-0	**CONTROL - Cont'd**						
24-24-137	NUT, Blower Motor Switch Mtg.,Model 952, R		1	---- ---	1887 603		
24-24-140	BEZEL, Control, Front Unit, Model 952, R . .		1	---- ---	2497 086		
	Front Unit, Model 952, W		1	---- ---	2497 452		
	Front Unit, w/o Radio, Model 952, W.		1	---- ---	2497 733		
	Front Unit, Model 954		1	2497 819			
	Front Unit, Model 953, C		1	---- ---	---- ---	2497 675	
	Blower Switch, Roof Unit, P.		1	---- ---	---- ---	2580 348	
24-24-148	COVER, Push Button Control Housing, Model 953, D	8	1	---- ---	---- ---	2497 869	
24-24-150	SWITCH, Auxiliary Vacuum Control, Front Unit, w/4 Leads, Model 952		1	---- ---	2257 452		
	Auxiliary Vacuum Control, w/4 Leads, includes BRACKET, Front Unit, Model 952 .		1	---- ---	2258 096		
	Vacuum Control, Front Unit, Models 912, 953, 954		1	2096 084	---- ---	2587 564	2096 084
	Temperature Control, Front Unit, Model 954 .		1	2521 642			
	Temperature Selector, w/3 Leads, Front Unit, Model 952		1	---- ---	2485 167		
	Push Button Vacuum Control, Front Unit, Model 952		1	---- ---	2427 409		
	GROMMET, Temperature Control Switch Tube.		1	---- ---	6025 934		
24-24-156	KNOB, Temperature Control, Front Unit, Model 954		1	2497 237			
	Front Unit, Model 952, R	6	1	---- ---	2426 563		
	Front Unit, Model 952, W		1	---- ---	*2497 710		
	Front Unit, Model 953, P1, P2		1	---- ---	---- ---	2497 746	
	Front Unit, Model 953, D2.	8	1	---- ---	---- ---	2631 508	
	Front Unit, Model 953, C	8	1	---- ---	---- ---	2497 657	
	Front Unit, Model 912		1	---- ---	---- ---	---- ---	2497 685
	Floor Air Control, Model 912		1	---- ---	---- ---	---- ---	2426 651
24-24-159	PLATE, Control, includes ARM, Front Unit, Model 954		1	2580 085			
	Front Unit, Model 952		1	---- ---	2497 080		
	Front Unit, Model 953, P		1	---- ---	---- ---	2497 755	
	Front Unit, Model 953, D2.	8	1	---- ---	---- ---	2580 699	
	Front Unit, Model 912		1	---- ---	---- ---	---- ---	2496 888
	Front Unit, Model 953, C	8	1	---- ---	---- ---	2496 821	
24-24-164	EXTENSION, Push Button, V, L, D Heat		1	2587 476	---- ---	2587 476	
	W, R Heat		1	---- ---	2426 386		
	C Heat	8	1	---- ---	---- ---	2496 672	
	P Heat		1	---- ---	---- ---	2497 763	
	Heat		1	---- ---	---- ---	---- ---	2496 917
	W, R Defroster		1	---- ---	2426 387		
	P Defroster		1	---- ---	---- ---	2497 764	
	C Defroster	8	1	---- ---	---- ---	2496 675	
	Defroster		1	---- ---	---- ---	---- ---	2496 916
	V, L, D Defroster		1	2587 477	---- ---	2587 477	
	V, L, D A/C		1	2587 475	---- ---	2587 475	
	C Fresh Cool	8	1	---- ---	---- ---	2496 673	
	Fresh Cool		1	---- ---	---- ---	---- ---	2496 915
	V, L, D Max. A/C		1	2587 474	---- ---	2587 474	
	W, R Cool		1	---- ---	2426 388		
	P Max. Cool		1	---- ---	---- ---	2497 761	

TYPE LETTERS Indicate: V - Valiant, L - Dart, R - Belvedere, W - Coronet, P - Plymouth, D - Dodge, C - Chrysler, Y - Imperial

★Indicates use as required. Numerals in parentheses ( ) refer to notes. Printed in U.S.A.

⊟Indicates parts not listed in any previous parts book. Prices and specifications subject to change without notice.

* Indicates change or addition. March 1966 Supersedes May 1965.

MyMopar.com

CODE	PART NAME AND DESCRIPTION	CYL	PER CAR	VALIANT / DART	PLYMOUTH BELVEDERE / DODGE CORONET	PLYMOUTH FURY / DODGE POLARA / CHRYSLER	IMPERIAL
24-24-0	**CONTROL - Cont'd**						
24-24-164	EXTENSION - Cont'd						
	C Max. Cool	8	1	---- ---	---- ---	2496 674	
	Max. Cool		1	---- ---	---- ---	---- ---	2496 914
	V, L, D Off		1	2587 473	---- ---	2587 473	
	W, R Off		1	---- ---	2426 385		
	P Off		1	---- ---	---- ---	2497 760	
	C Off	8	1	---- ---	---- ---	2496 671	
	Off		1	---- ---	---- ---	---- ---	2496 913
24-24-167	LAMP, Control, W		1	---- ---	2426 562		
	LAMP, Control, Model K		1	2013 183	2013 183	2013 183	2013 183
	SOCKET, Control Lamp, P, D.		1	---- ---	---- ---	2097 003	
24-24-170	PAD, Push Button Cover		1	2580 352			
24-24-174	MASK, Control, w/LENS		1	---- ---	---- ---	---- ---	2496 892
24-24-175	INDICATOR, Control, P, w/LENS		1	---- ---	---- ---	*2497 757	
24-25-0	**COMPRESSOR**						
24-25-2	PISTON RING PACKAGE		2	2275 207	2275 207	2275 207	2275 207
24-25-3	PISTON and CONNECTING ROD PACKAGE, V2 Compressor		2	2525 659	2525 659		
	RV2 Compressor	8	2	---- ---	---- ---	2541 330	2541 330
24-25-5	COMPRESSOR, V2		1	2021 209	2021 209	2021 209	2021 209
	COMPRESSOR, RV2	8	1	---- ---	---- ---	2019 689	2019 689
24-25-10	SUPPORT, Compressor, Rear w/170, 225, cu. in. Eng.	6	1	2468 695			
	Right, w/170 cu. in. Eng.	6	1	2468 694			
	Right, w/225 cu. in. Eng.	6	1	2468 495			
	Right, Rear, w/273, 318, cu. in. Eng.	8	1	2463 403	2463 403		
	Left, Rear, w/273, 318, cu. in. Eng.	8	1	2463 404	2463 404		
	Left, Rear, w/273 cu. in. Eng.	8	1	2536 083	2536 083		
	Left, Side, w/273 cu. in. Eng.	8	1	---- ---	2536 084		
	Rear, w/225 cu. in. Eng.	6	1	---- ---	---- ---	2465 074	
	Rear, w/225 cu. in. Eng.	6	1	---- ---	2264 868		
	Right, w/225 cu. in. Eng.	6	1	---- ---	2264 867	2264 867	
	Left, w/318 cu. in. Eng.	8	1	---- ---	2536 142	2536 142	
	Right, w/170 cu. in. Eng., Model K, P	6	1	2264 866			
	Right, w/225 cu. in. Eng., Model K, P	6	1	2264 867	2264 867	2264 867	
	Left, Model K	8	1	---- ---	---- ---	2264 218	
	Rear, Model K, P	6	1	2264 868	2264 868	2264 868	
	Left, Front, w/361, 383, cu. in. Eng., Model K, P	8	1	---- ---	1993 725	1993 725	
	Left, w/273, 318, cu. in. Eng., Model K, P	8	1	---- ---	2264 218	2264 218	
	Right, w/273, 318, cu. in. Eng.	8	1	---- ---	2264 219	2264 219	
	Left, Side, w/318 cu. in. Eng.	8	1	---- ---	2536 102		
	Left, Rear, w/318 cu. in. Eng.	8	1	---- ---	---- ---	2536 141	
	Left, Front, w/413 cu. in. Eng., Model K	8	1	---- ---	---- ---	1993 725	1993 725
	Rear, Right, w/361, 383, cu. in. Eng., 6 5/8" lgh.	8	1	---- ---	2463 038	2463 038	
	Rear, Left, 361, 383, cu. in. Eng., 8 1/2" lgh.	8	1	---- ---	2402 239	2402 239	
	Rear, Left, w/413 cu. in. Eng.	8	1	---- ---	2402 352	2402 352	2402 352
	Rear, Right, w/413 cu. in. Eng.	8	1	---- ---	2468 808	2468 808	2468 808

TYPE LETTERS indicate: V - Valiant, L - Dart, R - Belvedere, W - Coronet, P - Plymouth, D - Dodge, C - Chrysler, Y - Imperial

★Indicates use as required. Numerals in parentheses ( ) refer to notes. Printed in U.S.A.

⊟Indicates parts not listed in any previous parts book. Prices and specifications subject to change without notice.

March 1966 Supersedes May 1965.

* Indicates change or addition.

MyMopar.com

CODE	PART NAME AND DESCRIPTION	CYL	PER CAR	VALIANT / DART	PLYMOUTH BELVEDERE / DODGE CORONET	PLYMOUTH FURY / DODGE POLARA / CHRYSLER	IMPERIAL
24-25-0	**COMPRESSOR - Cont'd**						
24-25-13	SPACER, Rear Support, w/361, 383, 413, cu. in. Eng.	8	1	---- ---	1947 685	1947 685	1947 685
	SPACER, Idler Pulley, w/318 cu. in. Eng., Model P	8	1	---- ---	---- ---	2014 006	
24-25-14	STUD, Exhaust Manifold to Bracket	8	1	---- ---	842 295	842 295	842 295
24-25-15	BRACKET, Compressor Mtg., Right, w/170, 225, cu. in. Eng.	6	1	2468 809			
	Rear, w/273 cu. in. Eng.	8	1	---- ---	2463 149		
	Front, w/273, 318, cu. in. Eng.	8	1	2264 215	2264 215	2264 215	
	Rear, w/318 cu. in. Eng.	8	1	---- ---	2463 579	2463 579	
	Front, w/225 cu. in. Eng.	6	1	---- ---	2264 865	2264 865	
	Rear, Right, w/273, 318, cu. in. Eng.	8	1	2465 717	2465 717	2014 008	
	w/361, 383, cu. in. Eng.	8	1	---- ---	1852 932	1852 932	
	w/413 cu. in. Eng.	8	1	---- ---	---- ---	1858 622	1858 622
	Front, Model K, P	6	1	2003 062			
	Mounting, w/361, 383, cu. in. Eng., Model K	8	1	---- ---	1999 185	1999 185	
	Mounting, w/413 cu. in. Eng., Model K	8	1	---- ---	---- ---	2003 103	2003 103
	Compressor, Steady-Side, w/361, 383, 413 cu. in. Eng.	8	1	---- ---	---- ---	2532 200	2532 200
	w/361, 383, cu. in. Eng., Model K, P	8	1	---- ---	2003 056	2003 056	
24-25-20	PULLEY, Compressor, Includes HUB, Double Groove, 6 1/2" O.D.		1	2521 654			
	Double Groove, 6 1/8" O.D.	8	1	---- ---	2097 106	2097 106	
	Double Groove, 6 1/8" O.D.		1	---- ---	2097 106		
	Single Groove, 7 1/4" O.D.	8	1	---- ---	2485 852		
	Single Groove, 7" O.D., w/273, 318 cu. in. Eng., Model K, P		1	2006 396	2006 396	2006 396	
	Single Groove, 6 3/4" O.D.	8	1	*2521 963			
	Single Groove, 6 3/4" O.D., w/361, 383, cu. in. Eng., Model K, P	8	1	---- ---	2003 058	2003 058	
	Single Groove, 7" O.D.	8	1	---- ---	2277 790		
	Double Groove, Heli-Grip, 5 7/16" O.D.	8	1	---- ---	---- ---	---- ---	2521 999
	Single Groove, 6 5/8" O.D.	6	1	2521 824	2521 824		
	Double Groove, 6 7/16" O.D.	8	1	---- ---	2521 923	2521 923	
24-25-31	SHIELD, Idler Pulley, P, D		1	⊟2658 758	⊟2658 758	⊟2658 758	
24-25-33	FACING PACKAGE, Compressor Heli-Grip Clutch	8	1	2485 805	---- ---	---- ---	2521 902
24-25-35	PULLEY, Compressor Idler, w/170, 225, 273, 318, cu. in. Eng.		1	2203 031	2203 031		
	w/361, 383, 413, cu. in. Eng.	8	1	---- ---	2004 766	2004 766	2004 766
	ROLLER, Compressor Idler		1	2206 022	2206 022	2206 022	
	w/273, 318 cu. in. Eng., Model K	8	1	2006 374	2006 374	2006 374	
24-25-41	SPRING, Clutch Drive	8	1	2485 609	---- ---	---- ---	*2485 609
24-25-45	BRACKET, Idler Pulley, w/170, 225, cu. in. Eng.	6	1	2203 035	2203 035	2203 035	
	Model K	6	1	2003 060			
	w/225, 273, 318, cu. in. Eng.	8	1	2264 221	2264 221		
	Model P, K	8	1	---- ---	*1999 182	*1999 182	*1999 182
	w/361, 383, 413, cu. in. Eng., Idler Pulley Adjusting, w/318 cu. in. Eng.	8	1	---- ---	---- ---	2013 996	
	w/361, 383, 413, cu. in. Eng.	8	1	---- ---	2004 767	2204 767	2004 767
	BRACKET, Idler Roller, w/225 cu. in. Eng.	6	1	---- ---	2406 052	2406 052	
	w/273, 318, cu. in. Eng.	8	1	2264 555	2264 555	2264 555	

TYPE LETTERS Indicate: V - Valiant, L - Dart, R - Belvedere, W - Coronet, P - Plymouth, D - Dodge, C - Chrysler, Y - Imperial

★Indicates use as required. Numerals in parentheses ( ) refer to notes. Printed in U.S.A.

⊟Indicates parts not listed in any previous parts book. Prices and specifications subject to change without notice.

• Indicates change or addition. March 1966 Supersedes May 1965.

MyMopar.com

CODE	PART NAME AND DESCRIPTION	CYL	PER CAR	VALIANT / DART	PLYMOUTH BELVEDERE / DODGE CORONET	PLYMOUTH FURY / DODGE POLARA / CHRYSLER	IMPERIAL
24-25-0	**COMPRESSOR - Cont'd**						
24-25-45	SPACER, Idler Roller Bracket, w/273, 318, cu. in. Eng.	8	1	1945 384	1945 384		
	w/318 cu. in. Eng., Model P	8	1	---- ---	---- ---	2014 006	
24-25-70	SEAL PACKAGE, Crankshaft Gas		1	1426 501	1426 501	1426 501	1426 501
24-25-84	HEAD, Compressor, Right		1	2000 083	2000 083	2000 083	2000 083
	Left		1	1999 502	1999 502	1999 502	1999 502
24-25-93	VALVE PLATE PACKAGE, Right		1	2275 204	2275 204	2275 204	2275 204
	Left		1	2275 205	2275 205	2275 205	2275 205
24-25-94	GASKET, Cylinder Head		2	1990 584	1990 584	1990 584	1990 584
	GASKET, Valve Plate		2	1990 598	1990 598	1990 598	1990 598
24-25-107	FITTING, Suction, for Compressor 2532 160		1	2545 730			
	w/170, 273, cu. in. Eng., P1		1	---- ---	---- ---	2545 730	
	Suction, for Compressor 2532 697	8	1	---- ---	---- ---	2545 732	
	Suction, for Compressor 2532 696, P	8	1	---- ---	---- ---	2545 731	
	Suction, for Compressor 2532 695	6	1	---- ---	---- ---	2545 731	
	Discharge, for Compressor 2465 232, 2465 355, 2468 294, 2532 160, 2532 695, 2532 697		1	2008 386	2008 386	2008 386	
	Discharge, for Compressor 2532 696	8	1	---- ---	---- ---	2007 168	
24-25-110	SEAL, Discharge Fitting		1	*1998 639	*1998 639	*1998 639	*1998 639
24-25-114	SCREEN, Suction		1	1996 845	1996 845	1996 845	1996 845
24-25-127	CAP, Compressor Gauge Fitting		1	1989 202	1989 202	1989 202	1989 202
24-25-132	VALVE, Pressure Regulator		1	2275 202	2275 202	2275 202	2275 202
24-25-133	CORE, Gauge Fitting		1	1992 947	1992 947	1992 947	1992 947
24-25-135	SEAL, Regulator Valve Discharge Fitting		1	1994 410	1994 410	1994 410	1994 410
	SEAL, Discharge Port		1	*2008 388	*2008 388	*2008 388	*2008 388
24-25-137	SPRING, Pressure Regulator Valve Spacer		1	1994 408	1994 408	1994 408	1994 408
24-25-154	CRANKSHAFT PACKAGE, for V2 Compressor	6	1	2021 190	2021 190	2021 190	
	For V2 Compressor	8	1	*2021 190	2021 190		
	For RV2 Compressor	8	1	---- ---	---- ---	2541 331	2541 331
24-25-156	SCREW, Compressor Pulley, 1/2" x 5/16-24		1	1819 843	1819 843	1819 843	1819 843
	1 1/4" x 5/16-24		1	1658 638	1658 638	1658 638	1658 638
24-25-157	WASHER, Compressor Pulley Screw		1	2097 102	2097 102	2097 102	2097 102
	w/170, 273, 318, cu. in. Eng., Model K	6	1	2006 397	2006 397	2006 397	
	w/383, 413, cu. in. Eng.	8	1	---- ---	2097 102	2097 102	2097 102
24-25-160	BEARING, Crankshaft Front Ball, RV2 Compressor	8	1	---- ---	---- ---	---- ---	*2019 681
	V2 Compressor		1	*1854 829	*1854 829	*1854 829	
	Rear Main Bronze		1	1984 152	1984 152	1984 152	1984 152
24-25-162	HOUSING PACKAGE, Crankshaft Front Bearing, for V2 Compressor	6	1	2196 315	2196 315	2196 315	
	V2 Compressor	8	1	---- ---	2196 315		
	RV2 Compressor	8	1	---- ---	---- ---	2541 332	2541 332
24-25-168	WASHER, Crankshaft Rear Bearing Thrust		1	1747 982	1747 982	1747 982	1747 982
24-25-189	SEAL, Crankshaft Bearing Housing		1	1377 831	1377 831	1377 831	1377 831
24-25-219	BEARING, Compressor Clutch		1	1769 318	1769 318	1769 318	1769 318

TYPE LETTERS Indicate: V - Valiant, L - Dart, R - Belvedere, W - Coronet, P - Plymouth, D - Dodge, C - Chrysler, Y - Imperial

★Indicates use as required. Numerals in parentheses ( ) refer to notes. Printed in U.S.A.

⊟Indicates parts not listed in any previous parts book. Prices and specifications subject to change without notice.

March 1966 Supersedes May 1965. • Indicates change or addition.

MyMopar.com

CODE	PART NAME AND DESCRIPTION	CYL	PER CAR	VALIANT / DART	PLYMOUTH BELVEDERE / DODGE CORONET	PLYMOUTH FURY / DODGE POLARA / CHRYSLER	IMPERIAL
24-25-0 COMPRESSOR - Cont'd							
24-25-232	COIL, Clutch Field, 4 13/16" O.D.		1	2097 105	2097 105	2097 105	
	4 1/8" O.D.	8	1	---- ---	---- ---	---- ---	2485 586
	5 1/4" O.D.	8	1	2485 847	2485 847		
	5 1/4" dia., Model K, P	6	1	---- ---	2006 395	2006 395	
	4 13/16" dia., Model K, P	8	1	---- ---	2097 105	2097 105	
24-25-234	RING, Clutch Internal		1	2097 103	2097 103	2097 103	2097 103
	External		1	2097 101	2097 101		
	External	6	1	---- ---	---- ---	2097 101	
	External	8	1	---- ---	2097 101	2097 101	2485 587
24-25-246	OIL PUMP PACKAGE, Compressor		1	2021 191	2021 191	2021 191	2091 191
24-25-252	SEAL, Compressor Oil Pump Cover		1	1747 988	1747 988	1747 988	1747 988
24-25-258	SUMP, Compressor Oil		1	1747 962	1747 962	1747 962	1747 962
24-25-260	GASKET, Oil Sump		1	1377 825	1377 825	1377 825	1377 825
24-26-0 RECEIVER DRIER							
24-26-20	DRIER, includes Sight GLASS		1	2521 374	2521 862	2521 862	2521 862
	w/413 cu. in. Eng.	8	1	---- ---	---- ---	2521 862	2521 862
	Model K, P		1	2013 691	2013 691	2013 691	2013 691
24-26-21	SCREW, Drier Mtg., Model K, P		2	1740 029	1740 029	1740 029	1740 029
24-26-26	PLUG, Drier Fusible		1	1998 645			
24-26-35	BRACKET, Drier		1	2219 155	2219 155	2219 155	2219 155
24-26-100	MUFFLER, Compressor Discharge, w/170, 225, cu. in. Eng.	6	1	2521 818			
	w/273 cu. in. Eng.	8	1	2521 369			
	w/225 cu. in. Eng.	6	1	---- ---	---- ---	2521 755	
	w/383, 413, cu. in. Eng.	8	1	---- ---	---- ---	2521 755	
	w/170, 225, 361, 383, 426, cu. in. Eng.		1	---- ---	2521 856		
	w/273, 318, cu. in. Eng.	8	1	---- ---	2521 772	2521 772	
	Model K	8	1	2004 773	2004 773	2004 773	2485 776
	Model K	6	1	2004 756	2004 756	2004 756	
	w/361, 383, 413, cu. in. Eng., Model K	8	1	---- ---	2277 868	2277 868	2277 868
	MUFFLER, Compressor Suction, w/225 cu. in. Eng., Dual Unit	6	1	---- ---	---- ---	2521 778	
	w/170, 225, cu. in. Eng., Single Unit	6	1	2521 884	*2521 884	2521 797	
	w/318 cu. in. Eng., Single Unit	8	1	---- ---	---- ---	2521 901	
	w/318 cu. in. Eng., Sta. Wgn.		1	---- ---	2521 900		
	w/170, 273, 318, 383, 426, cu. in. Eng., Single Unit		1	---- ---	2277 792		
	w/273 cu. in. Eng.	8	1	2521 896			
	w/Dual Unit		1	---- ---	---- ---	---- ---	2521 229
	MUFFLER, W/Suction Tube w/383, 413 cu. in. Eng.	8	1	---- ---	---- ---	*2521 976	
24-26-101	BRACKET, Suction Muffler, P2	8	1	---- ---	---- ---	2521 795	2485 997
24-27-0 CONDENSER							
24-27-5	CONDENSER		1	2521 326			
			1	---- ---	2485 930		
			1	---- ---	---- ---	2521 165	
			1	---- ---	---- ---	---- ---	2485 767
	Model K, P		1	*2521 325	2010 211	2010 211	2010 211

TYPE LETTERS Indicate: V - Valiant, L - Dart, R - Belvedere, W - Coronet, P - Plymouth, D - Dodge, C - Chrysler, Y - Imperial

★Indicates use as required. Numerals in parentheses ( ) refer to notes. Printed in U.S.A.

⊟Indicates parts not listed in any previous parts book. Prices and specifications subject to change without notice.

* Indicates change or addition. March 1966 Supersedes May 1965.

MyMopar.com

CODE	PART NAME AND DESCRIPTION	CYL	PER CAR	VALIANT / DART	PLYMOUTH BELVEDERE / DODGE CORONET	PLYMOUTH FURY / DODGE POLARA / CHRYSLER	IMPERIAL
24-27-0	**CONDENSER - Cont'd**						
24-27-9	NUT, Brass Reducing Model, K, P	8	1	2013 788			
24-27-15	BRACKET, Condenser, w/Tube SUPPORT		1	2521 743			
	BRACKET, w/Tube SUPPORT		1	---- ---	2013 035	2013 035	2013 035
	BRACKET, w/Tube SUPPORT, Rear		1	---- ---	---- ---	2013 033	2013 033
	BRACKET, Mtg.	8	4	2014 003			
	BRACKET, Mtg., Model K, P.	8	1	---- ---	⊟2014 004	⊟2014 004	⊟2014 004
24-28-0	**EVAPORATOR**						
24-28-3	COVER, Lock Pillar Hose, Upper, Right		1	---- ---	---- ---	4105 AT6	
	Upper, Left		1	---- ---	---- ---	4103 AT6	
	Upper, Right, at Roof Rail		1	---- ---	---- ---	4106 AW3	
	Upper, Left, at Roof Rail		1	---- --	---- ---	4104 AW3	
	Lower, Right		1	---- ---	---- ---	4101 AT6	
24-28-5	EVAPORATOR, Front Unit, Model 952		1	---- ---	2485 290		
	Roof Unit		1	---- ---	2521 653		
	Model K		1	2013 732	2013 779	2013 779	2013 779
	Model P		1	2014 018	2014 022	2014 022	
24-28-6	SUB COOLER		1	---- ---	---- ---	---- ---	2521 864
24-28-7	TURN BUCKLE, Door Lever Shaft, Model 954		1	2521 621			
	Evaporator Unit Support, Model K, P	6	1	2485 783			
24-28-8	BRACKET, Heater Mtg., Left, Model 952		1	---- ---	2277 209		
	Evaporator Mtg., Roof Unit, Right		1	---- ---	---- ---	2521 650	
	To Blower Deck, Model K		1	2485 778	---- ---	---- ---	2011 449
	Mounting, Model K		1	---- ---	2014 012	2014 012	
	Model K, P, Right		1	---- ---	---- ---	⊟2013 737	
	SUPPORT, Bottom, Model K, P		1	2485 779			
	Tube Cover to Pillow		1	---- ---	---- ---	2581 236	
	BRACKET, Switch, w/Lamp COVER, Model K.		1	2013 205	2013 205	2013 205	2013 205
24-28-10	SCREEN, Evaporator Coil	8	1	*2521 953			
24-28-11	FILLER, Evaporator Mtg.						
	BRACKET, Model K		1	---- ---	---- ---	⊟2013 742	
	Model P, C	8	1	---- ---	---- ---	⊟2013 722	
24-28-12	BASE, Evaporator Support, Model K		1	2485 781			
24-28-17	CLAMP, Discharge Tube to Yoke		1	---- ---	2277 430		
	CLAMP, Water Valve Hose		2	---- ---	---- ---	2521 726	2521 726
	CLAMP, Sub Cooler		1	---- ---	---- ---	---- ---	2521 864
24-28-18	ADAPTER, Tube and Nut, 1 5/8" lgh., 1/2" dia., 3/4-16 thd.		★	2485 915	2485 915	2485 915	2485 915
	1 7/8" lgh., 5/8" dia., 7/8-14 thd.		★	2485 916	2485 916	2485 916	2485 916
	1 1/2" lgh., 3/8" dia., 5/8-18 thd.		★	2485 914	2485 914	2485 914	2485 914
	2 1/4" lgh., 3/4" dia., 1 1/16-14 thd.	8	★	---- ---	---- ---	2521 920	
24-28-19	GROMMET, Vacuum Hose to Dash		1	---- ---	1886 101	1886 101	1886 101
	Blower Motor Mtg.		1	---- ---	---- ---	---- ---	1879 827
	Temperature Control Cable		1	1842 997			
	Core to Tube		★	---- ---	---- ---	2521 075	
	Discharge Hose		1	---- ---	2014 009	2014 009	
	Heater Tube		1	---- ---	2521 072		
24-28-22	SCREW, Self Tapping, w/FLANGE, 10-16 x 1/2" lgh.		★	1740 029	1740 029	1740 029	1740 029

TYPE LETTERS Indicate: V - Valiant, L - Dart, R - Belvedere, W - Coronet, P - Plymouth, D - Dodge, C - Chrysler, Y - Imperial

★Indicates use as required. Numerals in parentheses ( ) refer to notes. Printed in U.S.A.

⊟Indicates parts not listed in any previous parts book. Prices and specifications subject to change without notice.

* Indicates change or addition.

MyMopar.com

24-28-0 EVAPORATOR - Cont'd

NOTE: For Refrigerant Hose see Chart in front of Group 24.

CODE	PART NAME AND DESCRIPTION	CYL	PER CAR	VALIANT / DART	PLYMOUTH BELVEDERE / DODGE CORONET	PLYMOUTH FURY / DODGE POLARA / CHRYSLER	IMPERIAL
24-28-24	TUBE, Condenser to Receiver Drier	6	1	*2521 371	*2521 371		
	Suction, w/Muffler	8	1	---- ---	*2521 976		
	Elbow, Expansion Valve to Evaporator		1	*2521 790			
	Condenser to Evaporator	8	1	---- ---	⊟2607 728		
	Condenser to Evaporator	6	1	---- ---	⊟2607 727		
	Water Inlet and Outlet Dual		1	---- ---	---- ---	2521 688	
	Discharge Hose to Condenser, 30 1/2" lgh.		1	---- ---	---- ---	---- ---	2485 784
	Discharge Hose to Condenser, 26 1/2" lgh.		1	---- ---	---- ---	---- ---	2521 233
24-28-25	HOUSING, Evaporator, Model 912		1	---- ---	---- ---	---- ---	2097 376
	HOUSING, Evaporator Coil, Model 912		1	---- ---	---- ---	---- ---	2096 259
	HOUSING, Evaporator, Model 952		1	---- ---	2277 217		
24-28-26	CONNECTOR, Vacuum Hose, Dual		1	---- ---	2277 713		
24-28-29	BRACKET, Suction Tube Mtg., on Eng., 6 1/4" lgh.	8	1	---- ---	---- ---	2521 781	2521 781
	BRACKET, Suction Hose Mtg., on Eng., 4" lgh.	8	1	---- ---	---- ---	2521 800	2521 800
	BRACKET, 6" lgh., D, C	8	1	---- ---	---- ---	2521 782	2521 782
24-28-31	GASKET, Water Inlet and Outlet Tube		1	---- ---	---- ---	2521 152	
	Evaporator to Dash		1	---- ---	---- ---	---- ---	1887 257
24-28-32	CLIP, Vacuum Control Switch Hose		1	---- ---	2257 848		
24-28-43	TRAY, Evaporator Coil Drain		1	---- ---	---- ---	2521 111	
24-28-47	TROUGH, Evaporator Coil Drain		1	---- ---	---- ---	---- ---	2096 182
24-28-48	LEVER, w/SWIVEL, Defroster Door		1	---- ---	---- ---	---- ---	1972 789
24-28-49	NUT, Floor Air Damper Control		1	---- ---	---- ---	---- ---	2427 119
24-28-55	CONNECTOR, Air Outlet, w/Radio, Right		1	---- ---	2521 431	---- ---	⊟2485 022
	CONNECTOR, w/Radio, Left		1	---- ---	2485 215	---- ---	⊟2485 023
	CONNECTOR, w/o Radio		2	---- ---	2485 215		
24-28-59	SCREW, Recirculating Door Link		1	---- ---	---- ---	---- ---	1885 835
24-28-63	GASKET, Heater Core Cover		1	---- ---	---- ---	---- ---	1879 861
24-28-64	VACUUM TUBE REPAIR KIT		1	*2448 621	2448 621	*2448 621	*2448 621
24-28-70	GRILLE, w/CONTROLS, Model P		1	2013 760	2013 760	2013 760	2013 760
	w/o Controls, Model P		1	2585 105	2585 105	2585 105	2585 105
	w/o Controls, Model K		1	2013 108	2013 108	2013 108	2013 108
24-28-72	CLIP, Outlet Duct Retainer		1	---- ---	---- ---	2521 729	
	CLIP, Defroster Tube		1	---- ---	---- ---	2521 729	
	CLIP, Spot Cooler Connector		1	---- ---	---- ---	2521 729	
	CLIP, Recirculating Door		1	---- ---	---- ---	---- ---	666 790
	CLIP, Rear Housing to Front Housing		11	2521 336			
24-28-73	DUCT, Fresh Air Inlet		1	---- ---	2277 342		
	Fresh Air, includes RETAINER, Flexible		1	---- ---	---- ---	2521 155	
	Fresh Air, Plastic		1	---- ---	---- ---	2485 454	
	Outlet, Center, P, D		1	---- ---	---- ---	2521 691	
	Outlet, Center, C		1	---- ---	---- ---	2521 696	
	CONNECTOR, Outlet, Spot Cooler		2	---- ---	---- ---	---- ---	2485 432
	CONNECTOR, Spot Cooler, Evaporator End		1	---- ---	---- ---	---- ---	*2485 493

TYPE LETTERS Indicate: V - Valiant, L - Dart, R - Belvedere, W - Coronet, P - Plymouth, D - Dodge, C - Chrysler, Y - Imperial

★Indicates use as required. Numerals in parentheses ( ) refer to notes. Printed in U.S.A.

⊟Indicates parts not listed in any previous parts book. Prices and specifications subject to change without notice.

* Indicates change or addition. March 1966 Supersedes May 1965.

MyMopar.com

CODE	PART NAME AND DESCRIPTION	CYL	PER CAR	VALIANT / DART	PLYMOUTH BELVEDERE / DODGE CORONET	PLYMOUTH FURY / DODGE POLARA / CHRYSLER	IMPERIAL
24-28-0	**EVAPORATOR - Cont'd**						
24-28-75	BEZEL, Air Outlet, includes LOUVER,						
	Front Unit, Right		1	---- ---	4222 VX9		
	Left		1	---- ---	4223 VX9		
	Rear Unit		2	---- ---	---- ---	---- ---	4442 AX9
24-28-78	LOUVER, Air Outlet, Right		1	2521 483			
	Left		1	2521 481			
	Center		1	2521 481			
	Center, P		1	---- ---	---- ---	2521 302	
	Center, D		1	---- ---	---- ---	2521 356	
	Center, C		1	---- ---	---- ---	2521 304	
	Roof Unit		4	---- ---	---- ---	2521 635	2521 635
	Right		1	---- ---	---- ---	---- ---	2521 802
	Left		1	---- ---	---- ---	---- ---	2521 803
	Rear Unit		2	---- ---	---- ---	---- ---	4442 AX9
24-28-80	DEFLECTOR, Floor Air, Left		1	---- ---	---- ---	---- ---	1886 413
24-28-84	ADAPTOR, Air Outlet Louver, Roof Unit		4	---- ---	---- ---	1753 579	
	ADAPTOR, w/CONNECTOR, Rear Unit	8	1	---- ---	---- ---	---- ---	*2485 539
24-28-86	WASHER, Floor Air Deflector		1	---- ---	---- ---	---- ---	2277 401
24-28-87	BUSHING, Air Deflector		4	---- ---	---- ---	---- ---	⊟2521 968
24-28-92	SEAL, Fresh Air Door Housing		1	---- ---	2162 245		
24-28-93	CONNECTOR, Air Outlet, Rear Unit, Right		1	---- ---	---- ---	---- ---	2485 603
	Air Outlet, Right, Model 912	8	1	---- ---	---- ---	---- ---	2485 022
24-28-98	VANE, Horizontal, Model K		4	⊟2013 097	⊟2013 097	⊟2013 097	⊟2013 097
	Horizontal, Control, Model K		2	⊟2013 098	⊟2013 098	⊟2013 098	⊟2013 098
	Vertical, Model K		8	⊟2013 081	⊟2013 081	⊟2013 081	⊟2013 081
	Vertical Control, Model K		4	⊟2013 082	⊟2013 082	⊟2013 082	⊟2013 082
24-28-99	LINKAGE, Evaporator Control		1	---- ---	2277 124		
	Heater Door Control		1	---- ---	---- ---	2521 702	
24-28-100	SHAFT, Shut-Off Door Lever, to Adjusting Nut		1	2521 571			
	Shut-Off Door		1	2521 572			
	Recirculating Door to Crank		1	2521 573			
	Fresh Air Door		1	---- ---	2162 525		
24-28-101	RETAINER, Fresh Air Door Shaft		1	---- ---	2216 735		
24-28-104	BALL STUD, Recirculating Door Linkage		1	---- ---	1858 936		
24-28-106	RETAINER, Recirculating Door Ball Joint		1	---- ---	1945 197		
24-28-107	PLATE, Air Outlet Trim		2	2521 466			
24-28-108	SPRING, Fresh Air Door Over Center		1	---- ---	2277 262	2521 694	
	Fresh Air Door		1	---- ---	---- ---	2521 082	
	Floor Heat Door		1	---- ---	---- ---	2521 082	
24-28-113	HOUSING, Fresh Air Door		1	---- ---	2162 239		
	HOUSING, Fresh Air, includes GRILLE and DOOR		1	---- ---	---- ---	⊟2521 017	
24-28-117	LEVER, Air Inlet		1	2521 501			
	Heater Door		1	---- ---	---- ---	2521 712	
	Defroster Door		1	2521 629			

TYPE LETTERS Indicate: V - Valiant, L - Dart, R - Belvedere, W - Coronet, P - Plymouth, D - Dodge, C - Chrysler, Y - Imperial

★Indicates use as required. Numerals in parentheses ( ) refer to notes. Printed in U.S.A.

⊟Indicates parts not listed in any previous parts book. Prices and specifications subject to change without notice.

 MyMopar.com Indicates change or addition.

CODE	PART NAME AND DESCRIPTION	CYL	PER CAR	VALIANT / DART	PLYMOUTH BELVEDERE / DODGE CORONET	PLYMOUTH FURY / DODGE POLARA / CHRYSLER	IMPERIAL
24-28-0	**EVAPORATOR - Cont'd**						
24-28-118	SPACER, Door Control Lever		1	---- ---	---- ---	2521 713	
24-28-124	CUP, Air Outlet Bezel		4	---- ---	2485 300		
24-28-127	CAP, 1/4" Brass Flare		1	---- ---	1989 202	1989 202	1989 202
24-28-142	LOCK, Vent Door		1	2277 515			
24-28-143	PLATE, Lock Vent Door		1	2277 516			
24-28-175	HOUSING, Blower, Roof Unit, Clock Wise		1	---- ---	---- ---	1887 299	1887 299
	Counter Clock Wise		1	---- ---	---- ---	1887 300	1887 300
24-28-176	SEAL, Inlet Duct to Dash		1	---- ---	---- ---	---- ---	1887 757
	GASKET, Blower Motor Mtg., Rear Unit		1	---- ---	---- ---	---- ---	2076 088
24-28-185	STATOR, Axial Blower		1	---- ---	2219 102		
24-28-186	ROTOR, Axial Blower Motor		1	---- ---	2521 764		
24-28-195	MOTOR, Axial Blower		1	---- ---	2277 418		
	MOTOR, Blower		1	2521 146	---- ---	2521 146	
	MOTOR, Blower, Front Unit		1	---- ---	---- ---	---- ---	1879 579
	MOTOR, Blower, Rear Unit		1	---- ---	---- ---	---- ---	2485 580
	MOTOR, Blower, Roof Unit		2	---- ---	---- ---	1886 266	
	MOTOR, Blower, Model K, P		1	2013 175	2013 175	2013 175	2013 175
24-28-199	BRACKET, Blower Motor		1	---- ---	---- ---	---- ---	1880 211
	RING, Axial, w/BRACKET, Lower Mtg.		3	---- ---	2277 585		
24-28-201	MOUNT, Blower Motor		3	2277 596	2277 596		
24-28-203	RESISTER, Blower Motor		1	2521 544			
	RESISTER, Blower Motor, Trunk Unit		1	---- ---	---- ---	---- ---	2485 593
24-28-205	CLIP, Axial Blower Motor Balancing,						
	.28 width		1	---- ---	2521 731		
	.28 width		1	---- ---	2521 732		
	.34 width		1	---- ---	2521 733		
	.25 width		1	---- ---	2521 734		
	.31 width		1	---- ---	2521 735		
	.38 width		1	---- ---	2521 736		
	3/4" lgh., 1/4" width		★	---- ---	2277 884		
	1 9/16" lgh., 1/4" width		★	---- ---	2277 887		
	1 1/8" lgh., 1/4" width		★	---- ---	2277 247		
	1 1/8" lgh., 17/64" width		★	---- ---	2277 670		
	1 1/8" lgh., 13/16" width		★	---- ---	2272 249		
	2" lgh., 1/4" width		★	---- ---	2277 888		
24-28-209	DEFLECTOR, Blower Sound		1	---- ---	2485 038		
24-28-210	WHEEL, Blower		1	2521 497			
	Roof Unit, Clock Wise		1	---- ---	---- ---	1886 265	
	Roof Unit, Counter Clock Wise		1	---- ---	---- ---	*1886 263	
	Front Unit		1	---- ---	---- ---	*2521 147	1880 442
	Rear Unit, Right		1	---- ---	---- ---	---- ---	2485 591
	Rear Unit, Left		1	---- ---	---- ---	---- ---	2277 597
	Right, C.W., Model K, P		1	2013 185	2013 185	2013 185	2013 185
	Left, C.C.W., Model K, P		1	2013 184	2013 184	2013 184	2013 184

TYPE LETTERS Indicate: V - Valiant, L - Dart, R - Belvedere, W - Coronet, P - Plymouth, D - Dodge, C - Chrysler, Y - Imperial

★Indicates use as required. Numerals in parentheses ( ) refer to notes. Printed in U.S.A.

⊟Indicates parts not listed in any previous parts book. Prices and specifications subject to change without notice.

* Indicates change or addition. March 1966 Supersedes May 1965.

MyMopar.com

CODE	PART NAME AND DESCRIPTION	CYL	PER CAR	VALIANT / DART	PLYMOUTH BELVEDERE / DODGE CORONET	PLYMOUTH FURY / DODGE POLARA / CHRYSLER	IMPERIAL
24-28-0	**EVAPORATOR - Cont'd**						
24-28-211	SEAL, Blower Motor Retainer		1	2521 232	---- ---	2521 232	
24-28-220	COIL, Evaporator		1	2521 509			
	Front Unit		1	---- ---	2219 837		
	Front Unit		1	---- ---	---- ---	2521 059	2485 726
	Rear Unit		1	---- ---	---- ---	---- ---	2485 757
	Roof Unit		1	---- ---	---- ---	2485 773	
	Model K, P		1	2013 171	2013 171	2013 171	2013 171
24-28-230	SNAP RING, Defroster Damper		★	--- ---	1539 430		
24-28-232	THERMOSTAT, w/Mtg. PLATE		1	---- ---	2485 284		
24-28-235	NUT, Feed Suction Grommet		2	---- ---	---- ---	---- ---	1605 267
24-28-241	SWITCH, Thermostat, Model K, P		1	2013 192	2013 192	2013 192	2013 192
24-28-248	KNOB, Discharge Control, Model K, P		1	2013 085	2013 085	2013 085	2013 085
	Thermostat, Model K, P		1	1997 553	1997 553	1997 553	1997 553
24-28-300	VALVE, Expansion, Front Unit		1	2521 788	2584 896	2584 923	2584 896
	Rear Unit		1	---- ---	---- ---	---- ---	2521 854
	Roof Unit		1	---- ---	2485 756	2485 756	
	Model K, P		1	2013 062	2013 063	2013 063	2013 063
24-28-302	ELBOW, Expansion Valve to Dash		1	2521 790			
	ELBOW, Vacuum Control Hose		1	---- ---	⊟2496 097		
24-28-318	TEE, Control Vacuum Hose		★	1886 109	1886 109	1886 109	1886 109
	TEE, Dual Unit, Liquid		1	---- ---	---- ---	2485 709	2485 709
	TEE, Dual Unit, Suction		1	---- ---	---- ---	2521 748	2521 748
24-28-326	SEAL, Hose and Tube O-Ring, 3/8" O.D.		★	2219 383	2219 383	2219 383	2219 383
	5/8" O.D.		★	---- ---	2219 385	2219 385	2219 385
	1/2" O.D.		★	2219 384	2219 384	2219 384	2219 384
	1/4" O.D.		★	2277 190	2277 190	2277 190	2277 190
	3/4" O.D.		★	2521 172	2521 172	2521 172	
	1/2" O.D.		★	2219 384	2219 384	2219 384	2219 384
	3/8" O.D.		★	---- ---	---- ---	2219 383	
	SEAL, Housing to Plenum		1	2277 669			
24-28-334	HOUSING, Evaporator		1	---- ---	---- ---	⊟2521 432	
24-28-336	DOOR, Distribution Outlet, Right		1	---- ---	---- ---	2521 440	
	Left		1	---- ---	---- ---	2521 441	
24-28-338	SPRING, Distribution Door Housing Retainer		1	---- ---	---- ---	2521 439	
24-28-341	ROD, Unit to Plenum Mtg.		1	2277 591			
24-28-357	NUT, Floor Air Damper Control Mtg.	8	1	---- ---	---- ---	---- ---	1339 711
24-28-358	NAME PLATE, Blower Switch, Rear Unit		1	---- ---	---- ---	2580 360	2580 360
24-28-364	DUCT, Distribution, Front Unit		1	---- ---	---- ---	---- ---	2485 497
24-28-366	CONTROL, Floor Air Damper		1	---- ---	---- ---	---- ---	2427 817
24-28-368	WASHER, Defroster Door, Front Unit		1	---- ---	---- ---	---- ---	1971 463
24-28-370	NOZZLE, Deflector, Right		1	---- ---	2485 396	2485 396	
	Left		1	---- ---	2485 646	2485 646	

TYPE LETTERS Indicate: V - Valiant, L - Dart, R - Belvedere, W - Coronet, P - Plymouth, D - Dodge, C - Chrysler, Y - Imperial

★Indicates use as required. Numerals in parentheses ( ) refer to notes. Printed in U.S.A.

⊟Indicates parts not listed in any previous parts book. Prices and specifications subject to change without notice.

March 1966 Supersedes May 1965.

MyMopar.com

* Indicates change or addition.

CODE	PART NAME AND DESCRIPTION	CYL	PER CAR	VALIANT / DART	PLYMOUTH BELVEDERE / DODGE CORONET	PLYMOUTH FURY / DODGE POLARA / CHRYSLER	IMPERIAL
24-28-0	**EVAPORATOR - Cont'd**						
24-28-378	NUT, Defroster Door Shaft		1	---- ---	---- ---	---- ---	1829 825
24-28-379	DOOR PACKAGE, Defroster		1	---- ---	---- ---	---- ---	2084 295
24-28-384	COVER, Deflector Lever		1	---- ---	---- ---	---- ---	2097 152
24-28-387	SPOT COOLER, Right		1	---- ---	2277 412		
	Left		1	---- ---	2485 209		
	SPOT COOLER, P	8	1	---- ---	---- ---	2521 274-5	
	SPOT COOLER, Right, D	8	1	---- ---	---- ---	2521 352	
	Left, w/Auto. Pilot, D	8	1	---- ---	---- ---	2521 351	
	Left, w/o Auto. Pilot, D	8	1	---- ---	---- ---	2521 353	
	P		1	---- ---	---- ---	2521 274-5	
	C	8	1	---- ---	---- ---	2521 184-5	
	Y1	8	2	---- ---	---- ---	---- ---	2485 209
24-28-389	SPACER, Spot Cooler, Left		1	---- ---	2485 218	---- ---	2485 225
24-28-392	RETAINER, Temperature Control Cable, P		★	2197 678	---- ---	2197 678	
	Recirculating Door Shaft		★	2197 678			
	Shut-Off Valve		★	2197 678			
	Actuator Shaft		★	2197 678			
24-28-393	BUMPER, Damper Stop		4	---- ---	2080 201	2080 201	
24-28-396	CLAMP, Spot Cooler Tube		★	---- ---	2277 426		
24-28-397	BRACKET, Spot Cooler Tube, Left		1	---- ---	2521 827		
24-28-399	SHAFT, Floor Heat Door		1	---- ---	---- ---	2521 108	
	Defroster Door		1	---- ---	---- ---	2521 100	
	Air Conditioning Door		1	---- ---	---- ---	⊟2521 099	
24-28-404	KNOB, Spot Cooler, P		2	---- ---	---- ---	2521 284	
	KNOB, Spot Cooler, D		2	---- ---	---- ---	*2521 367	
24-28-405	CONNECTOR, Spot Cooler Hose		1	---- ---	---- ---	2521 384	
	CONNECTOR, Spot Cooler Right, D	8	1	---- ---	---- ---	⊟2521 380	
	Left	8	1	---- ---	---- ---	⊟2521 381	
	CONNECTOR, Spot Cooler, Evaporator, End Right	8	1	---- ---	---- ---	*2521 384	
24-29-0	**ACTUATOR**						
24-29-1	ACTUATOR, Evaporator Door		1	2521 502			
	Heater Shut-Off Door		1	2521 569			
	Defroster		1	2521 503	2219 916	---- ---	2277 051
	Water Valve		1	⊟2485 266			
	Recirculating Door		1	---- ---	---- ---	---- ---	2277 052
	By-Pass Door		1	---- ---	---- ---	---- ---	2277 054
	Deflector		1	---- ---	---- ---	---- ---	2277 053
	Spot Cooler		1	---- ---	2219 915		
	Fresh Air Door		1	---- ---	---- ---	2521 141	
	Heater Door		1	---- ---	---- ---	2521 137	
	Air Conditioning Door		1	---- ---	---- ---	2521 139	
24-29-15	RETAINER, Actuator Shaft		★	2197 678	2197 678	2197 678	2197 678
	CLIP, Water Valve Control		★	---- ---	---- ---	6000 394	
	CLIP, Actuator Rod		★	---- ---	---- ---	6008 145	
	CLIP, Deflector Shaft		★	---- ---	---- ---	---- ---	2076 405

TYPE LETTERS Indicate: V - Valiant, L - Dart, R - Belvedere, W - Coronet, P - Plymouth, D - Dodge, C - Chrysler, Y - Imperial

★Indicates use as required. Numerals in parentheses ( ) refer to notes. Printed in U.S.A.

⊟Indicates parts not listed in any previous parts book. Prices and specifications subject to change without notice.

• Indicates change or addition.

March 1966 Supersedes May 1965.

MyMopar.com

CODE	PART NAME AND DESCRIPTION	CYL	PER CAR	VALIANT / DART	PLYMOUTH BELVEDERE / DODGE CORONET	PLYMOUTH FURY / DODGE POLARA / CHRYSLER	IMPERIAL

NOTES

TYPE LETTERS Indicate:

V - Valiant	R - Belvedere	P - Plymouth	C - Chrysler
L - Dart	W - Coronet	D - Dodge	Y - Imperial

★Indicates use as required. Numerals in parentheses ( ) refer to notes. Printed in U.S.A.

⊟Indicates parts not listed in any previous parts book. Prices and specifications subject to change without notice.

May 1965.

MyMopar.com

ALPHABETICAL INDEX

PART NAME	CODE
A	
Absorber, shock	1-07-1 17-23-3 to 17-23-57
Accelerator pedal	14-01-1 to 14-01-30
Accelerator pedal return spring	14-06-1 to 14-06-10
Accelerator pedal to accelerator shaft rod	14-07-15
Accelerator shaft	14-11-1 to 14-11-48
Accessories	1-04-0 thru 1-108-0
Actuator	24-29-1 to 24-29-15
Adjuster, front seat	23-47-6 to 23-47-456
Adjuster, wheel brake	5-20-1 to 5-20-20
Air cleaner, carburetor	14-29-2 to 14-29-40
Air cleaner, crankcase vent inlet	10-01-21 to 10-01-62
Air cleaner, power brake	5-113-17 to 5-113-23
Air conditioning	24-01-1 to 24-01-87
Air conditioning control	24-24-5 to 24-24-167
Air intake	23-61-39 to 23-61-118
Alternator	8-28-3 to 8-28-292
Alternator component parts	8-29-17 to 8-29-208
Ammeter	8-37-1
Antenna, radio	1-88-1 to 1-88-205
Anti-squeak, body	23-31-33 to 23-31-205
Arm, front wheel lower control	2-10-6 to 2-10-76
Arm, front wheel upper control	2-08-5 to 2-08-72
Arm, steering linkage knuckle	2-05-4 to 2-05-12
Arm and bracket, visor	23-103-10 to 23-103-48
Arm and idler arm, steering link gear, power steering	19-27-2 to 19-27-55
Arm and idler arm, steering link gear, standard steering	19-27-2 to 19-27-51
Arm rest, front door	23-76-3 to 23-76-86
Ash receiver	23-02-1 to 23-02-151
Assist strap	23-77-3 to 23-77-17
Automatic choke to carburetor rod clip	14-65-4
Automatic door lamp switch	8-12-2 to 8-12-17
Automatic headlamp dimmer	1-04-4 to 1-04-18
Automatic pilot	1-26-1 14-02-1 to 14-02-79
Automatic 3 speed transmission	21-02-1
Auxiliary vacuum switch	24-24-150
Axle, housing rear	3-02-1 to 3-02-20
B	
Back, rear seat	23-109-3 to 23-109-40
Back-up lamp	1-10-1 8-56-1 to 8-56-61
Back-up lamp switch	8-56-2
Band, automatic 3 speed transmission	21-136-5 to 21-136-237
Bar, belt	23-51-3 to 23-51-48
Bar, front bumper face	13-64-3 to 13-64-149
Bar, front suspension torsion	2-14-0 to 2-14-3
Bar, radiator cross	7-33-1 to 7-33-22
Bar, rear bumper face	13-66-3 to 13-66-153
Battery and cable	8-01-4 to 8-01-21
Battery heat shield	13-35-1
Battery hold-down strap	13-34-3
Battery hold-down stud	13-36-5
Battery support tray	13-33-61 to 13-33-68

MyMopar.com

PART NAME	CODE
Bearing, camshaft	9-16-6 to 9-16-17
Bearing, clutch release	6-19-2 to 6-19-3
Bearing, countershaft, manual transmission	21-25-2 to 21-25-6
Bearing, differential	3-11-1 to 3-11-14
Bearing, drive pinion	3-22-24 to 3-22-45
Bearing, drive shaft	3-33-1 to 3-33-11
Bearing, front wheel	22-06-1 to 22-06-18
Bearing, main shaft, manual transmission	21-19-2 to 21-19-15
Bearing, main shaft pilot, manual transmission	21-17-2 to 21-17-7
Bearing, propeller shaft center	16-16-1 to 16-16-43
Bearing package, connecting rod	9-32-2
Bearing package, crankshaft	9-09-2
Belt, fan and related drive	7-03-1
Belt, safety seat	1-67-1 to 1-67-18
Belt bar	23-51-3 to 23-51-48
Belt package	1-67-1 to 1-67-9
Block, cylinder	9-02-7 to 9-02-16
Block, rear spring silent	17-17-3 to 17-17-5
Blower motor switch	24-24-5
Blower motor switch w/cable	24-24-5
Board, floor	23-04-205 to 23-04-250
Body, universal joint	16-04-1
Body and chassis wiring	8-15-2 to 8-15-53
Body anti-squeak	23-31-33 to 23-31-205
Body bracket	23-07-169
Body bumper	23-08-12 to 23-08-75
	23-32-6 to 23-32-115
Body insulator	23-31-33 to 23-31-205
Body liner	23-31-33 to 23-31-205
Body pad	23-31-33 to 23-31-205
Body pan	23-32-6 to 23-32-115
Body panel	23-34-3 to 23-34-354
Body pillar	23-36-4 to 23-36-141
Body plug	23-32-6 to 23-32-115
Body reinforcement	23-07-168 to 23-07-169
Body seal	23-31-33 to 23-31-205
Body side sill	23-51-3 to 23-51-45
Body striker	23-08-12 to 23-08-75
Bolt, drive gear	3-20-1
Bolt, rear spring center	17-14-10
Boot, folding top dust	23-112-12 to 23-112-153
Boot, master cylinder	5-40-1
Boot, wheel cylinder	5-69-1
Box, glove	23-06-4 to 23-06-68
Brace, fender	12-07-1
Bracket, body	23-07-169
Bracket, brake pedal	5-31-11 to 5-31-18
Bracket, brake tube	5-57-2
Bracket, clutch pedal	6-46-1
Bracket, fender	12-06-3
Bracket, fender pillar support and cowl	12-05-2
Bracket, frame engine rear support crossmember	9-70-9
Bracket, power unit mounting	5-101-1
Bracket, steering column, power steering	19-31-1 to 19-31-7
Bracket, steering column, standard steering	19-31-1 to 19-31-7
Bracket, throttle control mounting	14-26-2 to 14-26-11
Bracket and arm, visor	23-103-10 to 23-103-48

MyMopar.com

PART NAME	CODE
Brake, power	1-42-1
Brake, support	5-13-0 to 5-13-85
Brake drum	22-04-2 to 22-04-14
Brake flexible hose	5-62-1 to 5-62-20
Brake fluid	5-01-1
Brake pedal and bushing	5-27-1 to 5-27-21
Brake pedal bracket	5-31-11 to 5-31-18
Brake pedal pad	5-28-8 to 5-28-9
Brake pedal return spring	5-34-1 to 5-34-6
Brake pedal shaft	5-29-1
Brake pedal stop	5-30-12
Brake self adjusting package	1-44-1
Brake shoe guide	5-25-9
Brake switch, w/bracket	14-02-32
Brake tube bracket	5-57-2
Brake tube clip	5-56-2
Brake tube tee	5-58-1 to 5-58-2
Brake tubing and cover	5-53-3 to 5-53-6
Bulb	8-44-1
Bumper, body	23-08-12 to 23-08-75 23-32-6 to 23-32-115
Bumper, hood	15-09-4
Bumper, rear spring	17-19-3 to 17-19-20
Bumper guard	1-01-1 13-68-6 to 13-68-18
Bumper jack	13-72-1 to 13-72-4
Bushing and pedal, brake	5-27-1 to 5-27-21
Bushing and roller, universal joint cross	16-10-1 to 16-10-3
Button, tufting	23-78-2
Button, universal joint centering	16-06-1 to 16-06-3

C

PART NAME	CODE
Cable, choke control	14-63-1 to 14-63-24
Cable, fast idle	14-24-1 to 14-24-6
Cable, parking brake	4-23-1 to 4-23-46
Cable, speedometer, automatic transmission	21-84-1 to 21-84-28
Cable, speedometer, manual transmission	21-84-1 to 21-84-28
Cable, throttle control	14-25-5 to 14-25-17
Cable and battery	8-01-4 to 8-01-21
Cable and connection	8-16-1 to 8-16-10
Camshaft	9-15-1 to 9-15-10
Camshaft bearing	9-16-6 to 9-16-17
Camshaft sprocket	9-17-5
Cap, crankshaft bearing	9-10-2 to 9-10-26
Cap, fuel tank locking	1-39-2
Cap, hub	22-08-5 to 22-08-57
Cap, radiator filler	7-12-1
Carburetor	14-30-1
Carburetor air cleaner	14-29-2 to 14-29-40
Carburetor assemblies and service parts	14-30-2 14-30-4 14-30-7 14-30-8 14-30-27 14-30-28 14-35-1 14-35-6 14-35-8 14-35-33 14-35-39 14-39-7 14-39-45 14-41-3 14-43-5
Carburetor fuel line tee	14-85-31
Carpet, front floor	23-79-3 to 23-79-79
Carrier, spare wheel	22-20-29 to 22-20-89
Carrier and components, front and rear planet pinion, automatic 3 speed transmission	21-134-5 to 21-134-45

MyMopar.com

PART NAME	CODE
Carrier and differential, rear axle	3-03-1 to 3-03-36
Case, differential	3-04-6 to 3-04-10
Case, manual transmission	21-03-1 to 21-03-25
Case, transmission, automatic 3 speed	21-03-2 to 21-03-40
Case, transmission, manual	21-03-1 to 21-03-25
Center pillar trim cover	23-99-4 to 23-99-38
Chain, timing	9-20-1
Chain case cover	9-23-5 to 9-23-40
Channel, glass	23-09-9 to 23-09-75
Chassis and body wiring	8-15-2 to 8-15-53
Check, door	23-10-1 to 23-10-18
Choke control cable	14-63-1 to 14-63-24
Cigar lighter	1-12-1 8-20-3 to 8-20-16
Clamp and support, exhaust pipe	11-08-5 to 11-08-24
Clip, automatic choke to carburetor rod	14-65-4
Clip, brake tube	5-56-2
Clip, fuel line tube	14-90-1
Clip, rear spring	17-15-1 to 17-15-30
Clock	1-21-1 to 1-21-27
Clutch	6-01-3
Clutch, automatic 3 speed transmission	21-133-7 to 21-133-65
Clutch cover and pressure plate	6-14-1 to 6-14-10
Clutch disc	6-13-1 to 6-13-4
Clutch housing	6-09-1 to 6-09-11
Clutch housing pan	6-10-2 to 6-10-10
Clutch parts, differential	3-09-1 to 3-09-3
Clutch pedal	6-38-1 to 6-38-23
Clutch pedal bracket	6-46-1
Clutch pedal pad	6-29-2
Clutch pedal rod	6-50-1 to 6-50-10
Clutch pedal shaft	6-43-1 to 6-43-13
Clutch pressure plate	6-15-1
Clutch pressure spring	6-16-1
Clutch release bearing	6-19-2 to 6-19-3
Clutch release bearing return spring	6-20-14
Clutch release overcenter spring	6-35-1 to 6-35-17
Clutch release fork	6-22-1 to 6-22-19
Clutch release fork return spring	6-27-5
Clutch release lever	6-17-3
Clutch release rod	6-24-1 to 6-24-14
Clutch torque shaft	6-52-1 to 6-52-17
Coat hanger hook	23-82-30 to 23-82-39
Component parts, alternator	8-29-17 to 8-29-208
Components, seat belt	23-49-3 to 23-49-9
Components and carrier, front and rear planet pinion, automatic	21-134-5 to 21-134-45
Components and heater	1-48-1 to 1-48-950
Compressor	24-25-2 to 24-25-260
Condenser	24-27-5 to 24-27-15
Conditioning, air	24-01-1 to 24-01-87
Connecting rod	9-31-4 to 9-31-10
Connecting rod bearing package	9-32-2
Connection and cable	8-16-1 to 8-16-10
Connector, power brake hose	5-110-18
Console, floor tunnel	23-38-1 to 23-38-40

MyMopar.com

PART NAME	CODE
Control, air conditioning	24-24-5 to 24-24-167
Control, door lock and remote	23-18-5 to 23-18-125
Control, gearshift, automatic 3 speed transmission	21-30-2 to 21-30-425
Control, hood lock	15-14-1 to 15-14-21
Control, horn	8-33-4 to 8-33-164
Control, manifold heat	9-59-13 to 9-59-15
Converter, torque	9-46-4 to 9-46-229
Core, radiator	7-11-3
Countershaft, manual transmission	21-24-2 to 21-24-22
Coupling and shaft, steering column, power steering	19-15-4 to 19-15-111
Courtesy and map lamp	1-14-4 to 1-14-6 8-42-1 to 8-42-29
Courtesy lamp	8-11-5 to 8-11-28
Cover, case, manual transmission	21-29-3 to 21-29-33
Cover, center pillar trim	23-99-4 to 23-99-38
Cover, chain case	9-23-5 to 9-23-40
Cover, front console	23-71-1
Cover, second seat back hinge	23-70-5 to 23-70-6
Cover, universal joint	16-07-3 to 16-07-4
Cover and tubing, brake	5-53-3 to 5-53-6
Cowl trim panel	23-91-6
Cowl vent	23-61-39 to 23-61-118
Crank, throttle control bell	14-14-1 to 14-14-41
Crankcase closed vent system	10-02-53 to 10-02-67
Crankcase vent inlet air cleaner	10-01-21 to 10-01-62
Crankshaft	9-07-5 to 9-07-22
Crankshaft bearing cap	9-10-2 to 9-10-26
Crankshaft bearing package	9-09-2
Crankshaft rear bearing oil seal	9-11-1 to 9-11-7
Crankshaft sprocket	9-08-5
Crankshaft vibration damper	9-13-5
Cross, universal joint	16-08-6 to 16-08-7
Crossmember, frame engine rear support	13-10-1 to 13-10-12
Crossmember, frame front	13-11-5 to 13-11-17
Crossmember, frame rear	13-18-4 to 13-18-32
Cup, wheel cylinder piston	5-71-1 to 5-71-2
Cushion, front seat	23-108-4 to 23-108-142
Cylinder, master	5-39-1 to 5-39-24
Cylinder, wheel brake	5-64-1 to 5-64-2
Cylinder and key, lock	23-17-2 to 23-17-72
Cylinder block	9-02-7 to 9-02-16
Cylinder head	9-03-4 to 9-03-29
Cylinder head water outlet elbow	9-05-5 to 9-05-6

D

PART NAME	CODE
Damper, crankshaft vibration	9-13-5
Deck lid	23-19-8 to 23-19-206
Deck lid lock release switch	23-19-94
Deflector, fuel tank stone	14-87-2
Deflector, radiator stone	7-35-2 to 7-35-14
Defogger, rear window	1-47-1 to 1-47-20
Differential and carrier, rear axle	3-03-1 to 3-03-36

MyMopar.com

PART NAME	CODE
Differential bearing	3-11-1 to 3-11-14
Differential case	3-04-6 to 3-04-10
Differential clutch parts	3-09-1 to 3-09-3
Differential pinion	3-07-1 to 3-07-2
Differential pinion shaft	3-08-1 to 3-08-2
Differential side gear	3-06-5 to 3-06-8
Dimmer, automatic headlamp	1-04-4 to 1-04-18
Disc, clutch	6-13-1 to 6-13-4
Distributor, ignition	8-27-1 to 8-27-352
Dome lamp and switch	8-05-6 to 8-05-40
Dome lamp switch	8-05-14
Door	23-11-1 to 23-11-30
Door check	23-10-1 to 23-10-18
Door hinge	23-15-1 to 23-15-38
Door lock and remote control	23-18-5 to 23-18-125
Door regulator	23-14-10 to 23-14-153
Door remote control handle	23-14-10 to 23-14-153
Door trim panel	23-92-5 to 23-92-25
Drain cock, radiator	7-13-2
Drain trough	23-59-25 to 23-59-61
Drier, receiver	24-26-20 to 24-26-101
Drive gear and pinion set	3-19-1
Drive gear bolt	3-20-1
Drive pinion bearing	3-22-24 to 3-22-45
Drive shaft	3-32-1 to 3-32-13
Drive shaft bearing	3-33-1 to 3-33-11
Drive shaft oil seal	3-35-14
Drum, brake	22-04-2 to 22-04-14
Drum, hub and brake	22-03-1
E	
Elbow, cylinder head water outlet	9-05-5 to 9-05-6
Elbow, water pump	7-48-22
Electric Door lock switch	23-18-103
Electric seat adjuster switch	23-47-446
Electric window lift and vent wing switch	23-41-170
Electric window lift safety switch package	1-50-1
Electric window lift switch w/bezel	23-41-170
Emergency flasher light	1-06-1 to 1-06-4
Emergency flasher light switch	1-06-3
Engine	9-01-5 to 9-01-24
Engine front support	9-64-5 to 9-64-24
Engine front support insulator	9-67-4
Engine rear support insulator	9-71-5 to 9-71-15
Evaporator	24-28-3 to 24-28-396
Exhaust pipe	11-05-1 to 11-05-12
Exhaust pipe flange gasket and stud	11-06-3 to 11-06-10
Exhaust pipe support and clamp	11-08-5 to 11-08-24
Exhaust valve	9-39-6 to 9-39-21
Extension, case, automatic 3 speed transmission	21-04-1 to 21-04-18
Extension, case, manual transmission.	21-04-1 to 21-04-11
F	
Fan	7-02-1 to 7-02-16
Fan and alternator idler pulley	7-04-1 to 7-04-16
Fan and related drive belts	7-03-1
Fan drive and driven pulley	7-06-1 to 7-06-14
Fan fluid drive unit	7-07-1
Fan pulley hub	7-05-1
Fast idle cable	14-24-1 to 14-24-6

MyMopar.com

PART NAME	CODE
Fender, front	12-01-5 to 12-01-105
Fender brace	12-07-1
Fender bracket	12-06-3
Fender moulding	12-15-11 to 12-15-21
Fender name plate	12-15-11 to 12-15-21
Fender ornaments	12-15-11 to 12-15-21
Fender pillar support and cowl bracket	12-05-2
Fender seal	12-02-5 to 12-02-10
Fender shim	12-02-5 to 12-02-10
Fender support	12-07-1
Filter, fuel	14-67-1 to 14-67-29
Filter, oil	10-26-5 to 10-26-65
Filter, oil, automatic 3 speed transmission	21-117-1 to 21-117-5
Flange, propeller shaft	16-20-1 to 16-20-8
Floor board	23-04-205 to 23-04-250
Floor mat	23-20-8 to 23-20-65
Floor tunnel console	23-38-1 to 23-38-40
Fluid, brake	5-01-1
Flywheel	9-45-1 to 9-45-2
Folding top	23-58-3 to 23-58-607
Folding top bow tacking strip	23-111-10 to 23-111-37
Folding top dust boot	23-112-12 to 23-112-153
Folding top header top material retainer	23-112-4 to 23-112-160
Folding top lift switch	23-58-532
Foot dimmer switch	8-53-150
Fork, clutch release	6-22-1 to 6-22-19
Fork, gearshift, manual transmission	21-39-3
Frame	13-01-1
Frame engine rear support cross-member	13-10-1 to 13-10-12
Frame engine rear support cross-member bracket	9-70-9
Frame front crossmember	13-11-5 to 13-11-17
Frame rear crossmember	13-18-5
Frame rear spring hanger	13-54-4 to 13-54-15
Frame sub - sidemember	13-04-20
Front bumper face bar	13-64-3 to 13-64-149
Front console cover	23-71-1
Front door arm rest	23-76-3 to 23-76-86
Front door power unit vent switch	23-41-170
Front fender	12-01-5 to 12-01-105
Front fender shield	12-04-4 to 12-04-25
Front floor carpet	23-79-3 to 23-79-79
Front seat	23-45-29 to 23-45-197
Front seat adjuster	23-47-6 to 23-47-456
Front seat back grab handle	23-82-14
Front seat back to cushion push nut	23-115-4 to 23-115-10
Front seat center arm screw	23-115-10
Front seat cushion	23-108-4 to 23-108-142
Front suspension torsion parts	2-14-1 to 2-14-25
Front wheel bearing	22-06-1 to 22-06-18
Front wheel lower control arm	2-10-6 to 2-10-76
Front wheel upper control arm	2-08-5 to 2-08-72
Fuel filter	14-67-1 to 14-67-29
Fuel gauge	8-37-275
Fuel line tube	14-89-2
Fuel line tube clip	14-90-1
Fuel pump	14-73-1
Fuel pump mounting gasket	14-74-1
Fuel pump push rod	14-77-1
Fuel tank	14-86-1 to 14-86-85

MyMopar.com

PART NAME	CODE
Fuel tank gauge	14-72-1 to 14-72-47
Fuel tank locking cap	1-39-2
Fuel tank stone deflector	14-87-2
Fuel tank support	14-88-8 to 14-88-36
Fuses	8-17-2 to 8-17-30
G	
Garnish moulding	23-22-53 to 23-22-155
Gasket, fuel pump mounting	14-74-1
Gasket, manifold	9-50-1 to 9-50-6
Gasket, water pump	7-44-3 to 7-44-4
Gasket and stud, exhaust pipe flange	11-06-3 to 11-06-10
Gauge, fuel	8-37-275
Gauge, fuel tank	14-72-1 to 14-72-47
Gauge, oil	8-37-316
Gauge, temperature	8-37-176
Gear, differential side	3-06-5 to 3-06-8
Gear, clutch, manual transmission	21-14-1 to 21-14-21
Gear, countershaft, manual transmission	21-15-2 to 21-15-33
Gear, manual transmission	21-10-3 to 21-10-31
Gear, oil pump drive	10-10-1
Gear, power steering	19-01-4 to 19-01-62
Gear, reverse idler, manual transmission	21-11-1 to 21-11-9
Gear, steering, standard	19-01-3 to 19-01-19
Gear and pinion, speedometer, manual transmission	21-85-22 to 21-85-61
Gearshift, remote control, manual transmission	21-42-11 to 21-42-43
Gearshift control, automatic 3 speed transmission	21-30-2 to 21-30-425
Gearshift control rod, power steering	19-48-1 to 19-48-52
Gearshift control rod, standard steering	19-48-1 to 19-48-52
Generator	8-28-3 to 8-28-292
Generator component parts	8-29-17 to 8-29-208
Glass channel	23-09-9 to 23-09-75
Glove box	23-06-4 to 23-06-68
Glove compartment lamp	1-19-1
	8-38-4 to 8-38-23
Glove compartment lamp and switch	8-38-4 to 8-38-23
Governor	14-68-3 to 14-68-8
Governor, automatic 3 speed transmission	21-138-2 to 21-138-38
Grille, radiator	7-16-11 to 7-16-82
Guard, bumper	13-68-6 to 13-68-18
Guide, brake shoe	5-25-9
Guide, wheel brake shoe	5-26-1 to 5-26-5
H	
Handle, door remote control	23-14-10 to 23-14-153
Handle, front seat back grab	23-82-14
Handle, rear door pull-to	23-81-3
Hanger, frame rear spring	13-54-4 to 13-54-15
Head, cylinder	9-03-4 to 9-03-29
Headlamp	8-34-1 to 8-34-365
Headlamp beam indicator lamp	8-39-15
Headlamp switch	8-53-270
Headlining and listing	23-86-2 to 23-86-37
Heater and components	1-48-1 to 1-48-950
Heater blower switch	1-48-770
Hinge, door	23-15-1 to 23-15-38
Hinge, hood	15-19-2 to 15-19-47

MyMopar.com

PART NAME	CODE
High beam indicator lamp	8-39-15
Hood bumper	15-09-4
Hood hinge	15-19-2 to 15-19-47
Hood letters	15-06-0
Hood lock	15-11-3 to 15-11-58
Hood lock control	15-14-1 to 15-14-21
Hood lock striker	15-13-2
Hood medallion	15-06-0
Hood moulding	15-25-0
Hood name plate	15-06-0
Hood top panel	15-03-3 to 15-03-60
Hook, coat hanger	23-82-30 to 23-82-39
Horn	8-32-2 to 8-32-18
Horn control	8-33-4 to 8-33-164
Hose, brake flexible	5-62-1 to 5-62-20
Hose, power brake vacuum	5-111-17
Hose, power steering	19-58-7 to 19-58-31
Hose, radiator	7-14-4 to 7-14-31
Housing, case, manual transmission	21-29-3 to 21-29-33
Housing, clutch	6-09-1 to 6-09-11
Housing, rear axle	3-02-1 to 3-02-20
Housing, steering gear, power steering	19-02-4 to 19-02-55
Housing, steering gear, standard steering	19-02-4 to 19-02-17
Housing, water pump	7-43-1 to 7-43-8
Hub, fan pulley	7-05-1
Hub, wheel	22-05-14 to 22-05-24
Hub and brake drum	22-03-1
Hub cap	22-08-5 to 22-08-57
I	
Ignition	8-36-1 to 8-36-139
Ignition and starter switch	8-35-59
Ignition coil	8-35-4 to 8-35-115
Ignition distributor	8-27-1 to 8-27-352
Ignition lamp	8-40-5 to 8-40-16
Ignition switch and lock cylinder	8-35-4 to 8-35-115
Impeller, water pump	7-45-31
Indicator, oil level	10-03-4 to 10-03-10
Instrument lamp switch	8-53-270
Instrument panel	23-33-10 to 23-33-236
Instrument panel center moulding and finish plate	1-40-3
Instrument panel instruments	8-37-1 to 8-37-509
Instrument panel lamp	8-41-35 to 8-41-36
Instrument panel trim pad	23-84-3 to 23-84-31
Instrument panel wiring	8-19-2 to 8-19-87
Instruments, instrument panel	8-37-1 to 8-37-509
Insulator, body	23-31-33 to 23-31-205
Insulator, engine front support	9-67-4
Insulator, engine rear support	9-71-5 to 9-71-15
Insulator, propeller shaft center bearing	16-17-1
Intake, air	23-61-39 to 23-61-116
Intake valve	9-39-1 to 9-39-5
J	
Jack, bumper	13-72-1 to 13-72-4
Jacket, steering column, power steering	19-14-1 to 19-14-68
Jacket, steering column, standard steering	19-14-1 to 19-14-68
Joint, universal	16-03-1 to 16-03-20

MyMopar.com

PART NAME	CODE
K	
Knuckle, steering	2-03-3
L	
Lamp, back-up	1-10-1 8-56-1 to 8-56-61
Lamp, courtesy	8-11-5 to 8-11-28
Lamp, courtesy and map	1-14-4 to 1-14-6 8-42-1 to 8-42-29
Lamp, glove compartment	1-19-1
Lamp, high beam indicator	8-39-15
Lamp, ignition	8-40-5 to 8-40-16
Lamp, license	8-57-10 to 8-57-109
Lamp, map and courtesy	1-14-4 to 1-14-6
Lamp, parking and turn signal	8-50-82 to 8-50-354
Lamp, parking brake signal	1-09-1 8-31-2 to 8-31-18
Lamp, power brake indicator	1-09-1
Lamp, quarter	8-11-5 to 8-11-28
Lamp, safety	8-14-6 to 8-14-13
Lamp, stop	8-58-60 to 8-58-79
Lamp, stop and turn signal	8-55-1 to 8-55-300
Lamp, trunk	8-13-2 to 8-13-6
Lamp, trunk compartment	1-30-1
Lamp, turn signal and stop	8-55-1 to 8-55-300
Lamp, underhood	1-13-10
Lamp and switch, dome	8-05-6 to 8-05-40
Lamp and switch, glove compartment	8-38-4 to 8-38-23
Leaf, rear spring	17-12-4 to 17-12-12
Letters, hood	15-06-0
Lever, clutch release	6-17-3
Lever, control, automatic 3 speed transmission	21-142-12 to 21-142-21
Lever, gearshift, manual transmission	21-30-2 to 21-30-433
Lever, parking brake (foot operated)	4-25-1 to 4-25-28
Lever, parking brake (hand operated)	4-08-1 to 4-08-36
Lever, parking brake operating	4-26-1 to 4-26-27
License lamp	8-57-10 to 8-57-109
License mounting parts	8-47-8 to 8-47-131
Lid, deck	23-19-8 to 23-19-188
Lift, window (manual)	23-39-2 to 23-39-53
Lift, window (electric window)	23-41-4 to 23-41-281
Light, emergency flasher	1-06-1 to 1-06-4
Light, underhood	1-13-10
Lighter, cigar	1-12-1 8-20-3 to 8-20-16
Liner, body	23-31-33 to 23-31-205
Lining, brake shoe	5-03-0 to 5-03-23
Lining and shoe, wheel brake	5-03-1 to 5-03-23
Listing and headlining	23-86-3 to 23-86-37
Lock, hood	15-11-3 to 15-11-58
Lock, safe-T-matic door	23-13-0
Lock, transmission parking	4-10-1 to 4-10-30
Lock cylinder and ignition switch	8-35-4 to 8-35-115
Lock cylinder and key	23-17-2 to 23-17-72
Lock, cylinder and switch ignition	8-35-4 to 8-35-115
Low oil pressure switch	8-53-327

MyMopar.com

PART NAME	CODE
Luggage compartment front lining panel	23-96-3 to 23-96-41

M

Manifold	9-48-6 to 9-48-155
Manifold gasket	9-50-1 to 9-50-6
Manifold heat control valve	9-59-13 to 9-59-15
Manifold heat control valve stop	9-62-1
Manifold heat control valve thermostat	9-58-1 to 9-58-14
Map and courtesy lamp	1-14-4 to 1-14-6 8-42-1 to 8-42-29
Master cylinder	5-39-1 to 5-39-24
Master cylinder boot	5-40-1
Master cylinder brake tube	5-52-3 to 5-52-62
Master cylinder piston	5-44-8 to 5-44-9
Master cylinder piston push rod	5-47-4 to 5-47-8
Master cylinder piston return spring	5-46-1
Mat, floor	23-20-8 to 23-20-65
Material, seat cloth trim	23-114-2 to 23-114-15
Medallion, hood	15-06-0
Medallion, radiator grille	7-17-0
Mirror	1-76-1 to 1-76-27 23-21-3 to 23-21-66
Moulding, fender	12-15-11 to 12-15-21
Moulding, garnish	23-22-53 to 23-22-155
Moulding, hood	15-25-0
Moulding, outside finish	23-23-2 to 23-23-85
Moulding, trim finish	23-26-16 to 23-26-87
Moulding and finish plate, instrument panel center	1-40-3
Mounting parts, license	8-47-8 to 8-47-131
Motor, starting	8-52-4 to 8-52-395
Muffler	11-01-1
Muffler support	11-02-1 to 11-02-13

N

Name plate, fender	12-15-11 to 12-15-21
Name plate, hood	15-06-0
Nipple, water pump	7-48-22
Nut and stud, wheel driving	22-05-14 to 22-05-24

O

Oil filter	10-26-5 to 10-26-65
Oil gauge	8-37-316
Oil level indicator	10-03-4 to 10-03-10
Oil pan	10-24-1 to 10-24-38
Oil pressure relief valve	10-22-11 to 10-22-41
Oil pump	10-07-2 to 10-07-14
Oil pump drive gear	10-10-1
Oil pump drive shaft	10-09-1 to 10-09-7
Oil pump, power steering	19-54-2 to 19-54-258
Oil pump rotor	10-14-18
Oil pump suction pipe	10-18-4
Oil strainer	10-23-7
Ornament, radiator grille	7-17-0
Ornaments fender	12-15-11 to 12-15-21
Outside finish moulding	23-23-2 to 23-23-85

P

Package, automatic 3 speed transmission	21-01-3
Package, bearing connecting rod	9-32-2
Package, belt, safety seat	1-67-1 to 1-67-9
Package, brake self adjusting	1-44-1
Package, manual transmission	2-01-3
Package, wheel cylinder repair	5-63-1 to 5-63-3

MyMopar.com

PART NAME	CODE
Pad, body	23-31-33 to 23-31-205
Pad, brake pedal	5-28-8 to 5-28-9
Pad, clutch pedal	6-39-1
Pad, instrument panel trim	23-84-3 to 23-84-31
Pan, body	23-32-6 to 23-32-115
Pan, clutch housing	6-10-2 to 6-10-10
Pan, oil	10-24-1 to 10-24-38
Pan, oil, automatic 3 speed transmission	21-119-3 to 21-119-19
Panel, body	23-34-3 to 23-34-354
Panel, cowl trim	23-91-6
Panel, door trim	23-92-5 to 23-92-25
Panel, hood top	15-03-3 to 15-03-60
Panel, instrument	23-33-10 to 23-33-236
Panel, luggage compartment front lining	23-96-3 to 23-96-41
Panel, rear quarter trim	23-101-3 to 23-101-26
Panel, rear upper pillar	23-99-38
Panel, rocker	23-51-3 to 23-51-48
Panel, shelf trim	23-102-3
Panel, visor trim	23-103-3 to 23-103-48
Parking and turn signal lamp	8-50-82 to 8-50-354
Parking brake cable	4-23-1 to 4-23-46
Parking brake lever (foot operated)	4-25-1 to 4-25-28
Parking brake lever (hand operated)	4-08-1 to 4-08-36
Parking brake lever return spring	4-19-1
Parking brake operating lever	4-26-1 to 4-26-27
Parking brake signal lamp	8-31-2 to 8-31-18
Pedal, accelerator	14-01-1 to 14-01-30
Pedal, clutch	6-38-1 to 6-38-23
Pedal and bushing, brake	5-27-1 to 5-27-21
Pillar, body	23-36-4 to 23-36-141
Pilot, automatic	1-26-1, 14-02-1 to 14-02-79
Pin, piston	9-36-5 to 9-36-7
Pinion, automatic 3 speed transmission speedometer	21-85-5 to 21-85-61
Pinion, differential	3-07-1 to 3-07-2
Pinion, main drive manual transmission	21-09-2 to 21-09-33
Pinion, speedometer, automatic 3 speed transmission	21-85-22 to 21-85-61
Pinion and gear, speedometer, manual transmission	21-85-22 to 21-85-61
Pipe, exhaust	11-05-1 to 11-05-12
Pipe, oil pump suction	10-18-4
Pipe, tail	11-09-3
Piston, master cylinder	5-44-8 to 5-44-9
Piston, power steering gear	19-56-6 to 19-56-83
Piston, w/pin	9-34-5
Piston, wheel cylinder	5-70-1
Piston pin	9-36-5 to 9-36-7
Piston ring set	9-35-1
Plate, clutch cover and pressure	6-14-1 to 6-14-10
Plate, clutch pressure	6-15-1
Plate, instrument panel center moulding and finish	1-40-3
Plug, body	23-32-6 to 23-32-115
Plug, spark	8-36-114
Pocket panel lamp switch	8-11-4
Power brake air cleaner	5-113-17 to 5-113-23
Power brake hose connector	5-110-18
Power brake indicator lamp	1-09-1

MyMopar.com

PART NAME	PAGE NO. CODE
Power brake power unit	5-100-1 to 5-100-212
Power brake vacuum check valve	5-105-1 to 5-105-6
Power brake vacuum hose	5-111-17
Power brake vacuum tank	5-102-2 to 5-102-11
Power steering gear piston	19-56-6 to 19-56-83
Power steering gear valves	19-57-1 to 19-57-64
Power steering hose	19-58-7 to 19-58-31
Power steering oil pump	19-54-2 to 19-54-258
Power steering wheel	19-30-4 to 19-30-18
Power unit mounting bracket	5-101-1
Propeller shaft	16-02-1 to 16-02-5
Propeller shaft center bearing	16-16-1 to 16-16-43
Propeller shaft center bearing insulator	16-17-1
Propeller shaft flange	16-20-1 to 16-20-8
Propeller shaft sliding yoke	16-14-1 to 16-14-8
Propeller shaft spline	16-14-1 to 16-14-9
Protector, door edge	1-135-1
Pulley, fan and alternator idler	7-04-1 to 7-04-16
Pulley, fan drive and driven	7-06-1 to 7-06-14
Pump, fuel	14-73-1
Pump, oil	10-07-2 to 10-07-14
Pump, oil, automatic 3 speed transmission	21-118-6 to 21-118-57
Pump, oil, power steering	19-54-2 to 19-54-258
Pump, water	7-42-1 to 7-42-4
Push button blower motor switch	1-48-770 to 1-48-942
Push button vacuum switch	24-24-150
Push nut, front seat back to cushion	23-115-4 to 23-115-10

PART NAME	PAGE NO. CODE
Q	
Quarter lamp	8-11-5 to 8-11-28
Quarter window opening weathercord	23-113-25 to 23-113-87
Rack, roof luggage	1-74-1
Rack, roof rail and luggage	23-40-82 to 23-40-189
Radiator core	7-11-3
Radiator core fan shroud	7-08-2 to 7-08-20
Radiator cross bar	7-33-1 to 7-33-22
Radiator drain cock	7-13-2
Radiator dust shield	7-31-10 to 7-31-12
R	
Radiator filler cap	7-12-1
Radiator grille	7-16-11 to 7-16-82
Radiator grille medallion	7-17-5 to 7-17-10
Radiator grille ornament	7-17-5 to 7-17-10
Radiator hose	7-14-4 to 7-14-31
Radiator stone deflector	7-35-2 to 7-35-14
Radiator yoke	7-26-2 to 7-26-37
Radio	1-87-1 to 1-87-404
Radio antenna	1-88-1 to 1-88-205
Radio foot control switch	1-87-6
Radio power antenna switch	1-88-205
Rear axle control strut	3-01-25 to 3-01-34
Rear axle differential and carrier	3-03-1 to 3-03-36
Rear axle housing	3-02-1 to 3-02-20
Rear bumper face bar	13-66-3 to 13-66-153
Rear door pull-to handle	23-81-3
Rear door safety lock	1-72-5
Rear quarter trim panel	23-101-3 to 23-101-26

MyMopar.com

PART NAME	CODE
Rear seat back	23-109-3 to 23-109-40
Rear spring	17-11-3 to 17-11-7
Rear spring bumper	17-19-3 to 17-19-20
Rear spring center bolt	17-14-10
Rear spring clip	17-15-1 to 17-15-30
Rear spring leaf	17-12-4 to 17-12-12
Rear spring shackle	17-16-1 to 17-16-8
Rear spring silent block	17-17-3 to 17-17-5
Rear upper pillar panel	23-99-38
Rear window defogger	1-47-1 to 1-47-20
Rear window defogger switch	1-47-7
Receiver, ash	23-02-1 to 23-02-151
Receiver drier	24-26-20 to 24-26-101
Regulator, door	23-14-10 to 23-14-153
Reinforcement, body	23-07-168 to 23-07-169
Repair package, wheel cylinder	5-63-1
Retainer, folding top header top material	23-112-4 to 23-112-160
Rocker, valve	9-43-1 to 9-43-19
Rocker panel	23-51-3 to 23-51-48
Rod, accelerator pedal to accelerator shaft	14-07-15
Rod, clutch pedal	6-50-1 to 6-50-10
Rod, clutch release	6-24-1 to 6-24-10
Rod, connecting	9-31-4 to 9-31-10
Rod, fuel pump push	14-77-1
Rod, gearshift control, power steering	19-48-1 to 19-48-52
Rod, gearshift control, standard steering	19-48-1 to 19-48-52
Rod, gearshift, manual transmission	21-30-2 to 21-30-433
Rod, master cylinder piston push	5-47-4 to 5-47-8
Rod, steering knuckle, tie	2-07-1 to 2-07-41
Rod, valve push	9-42-1
Rod, wheel cylinder piston push	5-12-1
Roller and bushing, universal joint cross	16-10-1 to 16-10-3
Roof rail and luggage rack	23-40-82 to 23-40-189
Rotor, oil pump	10-14-18
Run, window glass	23-42-13 to 23-42-59

S

PART NAME	CODE
SAFE-T-MATIC Door lock	23-13-0
Safety lamp	8-14-6 to 8-14-13
Safety seat belt	1-67-1 to 1-67-18
Screw, front seat center arm	23-115-10
Screw, wheel cylinder bleeder	5-67-1
Seal, body	23-31-33 to 23-31-205
Seal, crankshaft rear bearing oil	9-11-1 to 9-11-7
Seal, drive shaft oil	3-35-14
Seal, fender	12-02-5 to 12-02-10
Seal, main shaft bearing oil, manual transmission	21-22-2
Seal, water pump	7-46-1
Seal and weatherstrip	23-63-14 to 23-63-182
Seat, front	23-45-29 to 23-45-197
Seat, second and third	23-48-11 to 23-48-206
Seat belt components	23-49-3 to 23-49-9
Seat cloth trim material	23-114-2 to 23-114-15
Second and third seat	23-48-11 to 23-48-206
Second seat back hinge cover	23-70-5 to 23-70-6

MyMopar.com

PART NAME	CODE
Service parts and carburetor assemblies	14-30-2 14-30-4 14-30-7 14-30-8 14-30-27 14-30-28 14-35-1 14-35-6 14-35-8 14-35-33 14-35-39 14-39-7 14-39-45 14-41-3 14-43-5
Servos, automatic 3 speed transmission	21-137-5 to 21-137-205
Set, automatic 3 speed transmission	21-01-3
Set, drive gear and pinion	3-19-1
Set, manual transmission	21-01-3
Set, piston ring	9-35-1
Shackle, rear spring	17-16-1 to 17-16-8
Shaft, accelerator	14-11-1 to 14-11-48
Shaft, brake pedal	5-29-1
Shaft, clutch pedal	6-43-1 to 6-43-13
Shaft, clutch torque	6-52-1 to 6-52-17
Shaft, differential pinion	3-08-1 to 3-08-2
Shaft, drive	3-32-1 to 3-32-9
Shaft, input, automatic 3 speed transmission	21-129-5 to 21-129-24
Shaft, main, manual transmission	21-16-3
Shaft, oil pump drive	10-09-1 to 10-09-7
Shaft, output, automatic 3 speed transmission	21-05-1 to 21-05-35
Shaft, propeller	16-02-1 to 16-02-5
Shaft, reverse idler gear, manual transmission	21-12-1 to 21-12-2
Shaft, steering gear, power steering	19-19-1 to 19-19-72
Shaft, steering gear, standard steering	19-19-4 to 19-19-70
Shaft, sway eliminator	17-29-5 to 17-29-21
Shaft, torque converter reaction, automatic 3 speed transmission	21-129-5 to 21-129-24
Shaft and coupling, steering column, power steering	19-15-4 to 19-15-111
Shaft and coupling, steering column, standard steering	19-15-4 to 19-15-111
Shelf trim panel	23-102-3
Shield, battery heat	13-35-1
Shield, front fender	12-04-4 to 12-04-25
Shield, radiator dust	7-31-10 to 7-31-12
Shim, fender	12-02-5 to 12-02-10
Shock absorber	1-07-1 17-23-3 to 17-23-57
Shock absorber support	17-24-28
Shoe and lining, wheel brake	5-03-1 to 5-03-23
Shroud, radiator core fan	7-08-2 to 7-08-20
Sill body side	23-51-3 to 23-51-45
Spare wheel carrier	22-20-29 to 22-20-89
Spark plug	8-36-114
Speedometer	8-37-371 to 8-37-372
Speedometer cable, shaft and housing	21-84-1 to 21-84-28
Spline, propeller shaft	16-14-1 to 16-14-9
Spring, accelerator pedal return	14-06-1 to 14-06-10
Spring, brake pedal return	5-34-1 to 5-34-6
Spring, clutch pressure	6-16-1
Spring, clutch release bearing return	6-20-14
Spring, clutch release fork return	6-27-5
Spring, clutch release overcenter spring	6-35-1 to 6-35-17
Spring, master cylinder piston return	5-46-1
Spring, parking brake lever return	4-19-1

MyMopar.com

PART NAME	CODE
Spring, rear	17-11-3 to 17-11-7
Spring, wheel brake shoe hold-down	5-26-1 to 5-26-5
Sprocket, camshaft	9-17-5
Sprocket, crankshaft	9-08-5
Starting motor	8-52-4 to 8-52-395
Steering column bracket, power steering	19-31-1 to 19-31-7
Steering column bracket, standard steering	19-31-1 to 19-31-7
Steering column gearshift tube, power steering	19-46-3 to 19-46-55
Steering column gearshift tube, standard steering	19-46-3 to 19-46-55
Steering column jacket, power steering	19-14-1 to 19-14-68
Steering column jacket, standard steering	19-14-1 to 19-14-68
Steering column shaft and coupling, power steering	19-15-4 to 19-15-111
Steering column shaft and coupling, standard steering	19-15-4 to 19-15-111
Steering column support, power steering	19-31-1 to 19-31-7
Steering column support, standard steering	19-31-1 to 19-31-7
Steering gear, power steering	19-01-4 to 19-01-62
Steering gear, standard steering	19-01-3 to 19-01-19
Steering gear housing, power steering	19-02-4 to 19-02-55
Steering gear housing, standard steering	19-02-4 to 19-02-17
Steering gear piston, power steering	19-56-6 to 19-56-83
Steering gear shaft, power steering	19-19-1 to 19-19-72
Steering gear shaft, standard steering	19-19-4 to 19-19-70
Steering gear valves, power steering	19-57-1 to 19-57-64
Steering knuckle	2-03-3
Steering knuckle tie rod	2-07-1 to 2-07-41
Steering link gear arm and idler arm power steering	19-27-2 to 19-27-55
Steering link gear arm and idler arm, standard steering	19-27-2 to 19-27-51
Steering linkage knuckle arm	2-05-4 to 2-05-12
Steering wheel, power steering	19-30-4
Steering wheel, standard steering	19-30-4
Stop, brake pedal	5-30-12
Stop, manifold heat control valve	9-62-1
Stop and turn signal lamp	8-55-1 to 8-55-300
Stop lamp	8-58-60 to 8-58-79
Strainer, oil	10-23-7
Strap, assist	23-77-3 to 23-77-17
Strap, battery hold down	13-34-2
Striker, body	23-08-12 to 23-08-78
Striker, hood lock	15-13-2
Strip, folding top bow tacking	23-111-10 to 23-111-37
Strut, rear axle control	3-01-25 to 3-01-34
Stud, battery hold-down	13-36-5
Stud, throttle linkage ball	14-13-1 to 14-13-5
Stud and gasket exhaust pipe flange	11-06-3 to 11-06-10
Stud and nut, wheel driving	22-05-14 to 22-05-24
Sub-side member frame	13-04-20
Support, engine front	9-64-5 to 9-64-24
Support, fender	12-07-1
Support, fuel tank	14-88-8 to 14-88-36
Support, muffler	11-02-1 to 11-02-13
Support, shock absorber	17-24-8
Support, steering column, power steering	19-31-1 to 19-31-7

MyMopar.com

PART NAME	CODE
Support, steering column, standard steering	19-31-1 to 19-31-7
Support, tail pipe	11-10-3 to 11-10-43
Support, wheel brake	5-13-1 to 5-13-35
Support and clamp, exhaust pipe	11-08-5 to 11-08-24
Sway eliminator shaft	17-29-5 to 17-29-21
Switch, automatic door lamp	8-12-2 to 8-12-17
Switch, auxiliary vacuum	24-24-150
Switch, back-up lamp	8-56-2
Switch, blower motor, w/cable	24-24-5
Switch, blower toggle	24-24-5
Switch, brake	14-02-32
Switch, courtesy lamp	8-11-6
Switch, deck lid lock release	23-19-94
Switch, dome lamp	8-05-14
Switch, electric door lock	23-18-103
Switch, electric seat adjuster	23-47-446
Switch, electric window lift w/bezel	23-41-170
Switch, electric window lift and vent wing	23-41-170
Switch, emergency flasher light	1-06-3
Switch, folding top lift	23-58-532
Switch, front door power unit vent	23-41-170
Switch, headlamp	8-53-270
Switch, heater blower	1-48-770
Switch, horn	8-33-90
Switch, ignition and starter	8-35-59
Switch, instrument lamp	8-53-270
Switch, lock cylinder and ignition	8-35-4 to 8-35-115
Switch, lockout electric	23-41-170
Switch, map lamp	8-42-25
Switch, neutral starter, automatic 3 speed transmission	21-113-24 to 21-113-29
Switch, parking brake indicator lamp	8-31-10
Switch, pocket panel lamp	8-11-6
Switch, push button blower motor	1-48-770 to 1-48-942
Switch, push button vacuum	24-24-150
Switch, radio foot control	1-87-6
Switch, radio power antenna	1-88-205
Switch, rear door automatic lamp	8-12-2
Switch, rear window defogger	1-47-7
Switch, socket and cable, trunk lamp	8-13-2
Switch, starter and ignition	8-35-59
Switch, stop lamp mechanical	8-58-60
Switch, tailgate electric window lift	23-54-167
Switch, trunk compartment lamp	1-30-3
Switch, trunk lamp	8-13-2
Switch, turn signal	8-50-82
Switch, underhood lamp	1-13-10
Switch, windshield wiper	23-67-160
Switch and cable, turn signal electric	8-50-82
Switch and lamp, dome	8-05-6 to 8-05-40
Switch and lock cylinder, ignition	8-35-4 to 8-35-115
Switch and lamp, glove box	8-38-23
Switches	8-53-150 to 8-53-327
T	
Tail lamp	8-55-1 to 8-55-300
Tail pipe	11-09-3
Tail pipe support	11-10-3 to 11-10-43
Tailgate	23-54-1 to 23-54-218
Tailgate electric window lift switch	23-54-167
Tank, fuel	14-86-1 to 14-86-85
Tank, power brake vacuum	5-102-2 to 5-102-11
Tappet, valve	9-41-4
Tee, brake tube	5-58-1 to 5-58-2
Tee, carburetor fuel line	14-85-31
Temperature gauge	8-37-176
Thermostat	7-41-4
Thermostat, manifold heat control valve	9-58-1 to 9-58-14
Throttle control bell crank	14-14-1 to 14-14-41
Throttle control cable	14-25-5 to 14-25-17
Throttle control mounting bracket	14-26-2 to 14-26-11
Throttle linkage ball stud	14-13-1 to 14-13-5
Timing chain	9-20-1
Top, folding	23-58-3 to 23-58-607
Torque converter	9-46-4 to 9-46-229
Torsion parts, front suspension	2-14-1 to 2-14-25
Transmission, automatic 3 speed	21-02-1
Transmission, manual	21-02-1
Transmission band, automatic 3 speed.	21-136-5 to 21-136-237
Transmission case, automatic 3 speed	21-03-2 to 21-03-40

MyMopar.com

PART NAME	CODE
Transmission case, manual	21-03-1 to 21-03-25
Transmission case cover, manual	21-29-3 to 21-29-33
Transmission case extension, automatic 3 speed	21-04-1 to 21-04-18
Transmission case extension, manual	21-04-1 to 21-04-11
Transmission case housing, manual	21-29-3 to 21-29-33
Transmission clutch, automatic 3 speed	21-133-7 to 21-133-65
Transmission clutch gear, manual	21-14-1 to 21-14-21
Transmission control lever, automatic 3 speed	21-142-12 to 21-142-21
Transmission countershaft bearing, manual	21-25-2 to 21-25-6
Transmission countershaft gear, manual	21-15-2 to 21-15-33
Transmission countershaft, manual	21-24-2 to 21-24-22
Transmission front and rear planet pinion carrier and components, automatic 3 speed	21-134-5 to 21-134-45
Transmission gear, manual	21-10-3 to 21-10-31
Transmission gearshift control, automatic 3 speed	21-30-2 to 21-30-425
Transmission gearshift fork, manual	21-39-3
Transmission gearshift lever, manual	21-30-2 to 21-30-433
Transmission gearshift rail, manual	21-34-42 to 21-34-53
Transmission gearshift rod, manual	21-30-2 to 21-30-433
Transmission governor, automatic 3 speed	21-138-2 to 21-138-38
Transmission input shaft, automatic 3 speed	21-129-5 to 21-129-24
Transmission main drive pinion, manual	21-09-2 to 21-09-33
Transmission main shaft bearing, manual	21-19-2 to 21-19-15
Transmission main shaft bearing oil seal, manual	21-22-2
Transmission main shaft, manual	21-16-3
Transmission main shaft pilot bearing, manual	21-17-2 to 21-17-7
Transmission neutral starter switch, automatic 3 speed	21-113-24 to 21-113-29
Transmission oil filter, automatic 3 speed	21-117-1 to 21-117-5
Transmission oil pan, automatic 3 speed	21-119-3 to 21-119-12
Transmission oil pump, automatic 3 speed	21-118-6 to 21-118-57
Transmission output shaft, automatic 3 speed	21-05-1 to 21-05-35
Transmission package, automatic 3 speed	21-01-3
Transmission package, manual	21-01-3
Transmission parking lock	4-10-1 to 4-10-30
Transmission remote control gearshift, manual	21-42-11 to 21-42-43
Transmission reverse idler gear, manual	21-11-1 to 21-11-9
Transmission reverse idler gear shaft, manual	21-12-1 to 21-12-2
Transmission servos, automatic 3 speed	21-137-5 to 21-137-205
Transmission set, automatic 3 speed	21-01-3
Transmission set, manual	21-01-3
Transmission speedometer cable, automatic 3 speed	21-84-1 to 21-84-28
Transmission speedometer cable, manual	21-84-1 to 21-84-28

MyMopar.com

PART NAME	CODE
Transmission speedometer pinion and gear, manual	21-85-22 to 21-85-61
Transmission speedometer pinion, automatic 3 speed	21-85-22 to 21-85-61
Transmission torque converter reaction shaft, automatic 3 speed	21-129-5 to 21-129-24
Transmission valve body and valves, automatic 3 speed	21-139-4 to 21-139-143
Tray, battery support	13-33-61 to 13-33-68
Trim finish moulding	23-26-16 to 23-26-87
Trough, drain	23-59-25 to 23-59-61
Trunk compartment lamp switch	1-30-3
Trunk lamp	8-13-1 to 8-13-6
Tube, fuel line	14-89-2
Tube, master cylinder brake	5-52-3 to 5-52-62
Tube, steering column gearshift, power steering	19-46-3 to 19-46-55
Tube, steering column gearshift, standard steering	19-46-3 to 19-46-55
Tubing and cover, brake	5-53-3 to 5-53-6
Tufting button	23-78-2
Turn signal and parking lamp	8-50-82 to 8-50-354
Turn signal and stop lamp	8-55-1 to 8-55-300
U	
Underhood light	1-13-10
Underhood light switch	1-13-10
Unit, fan fluid drive	7-07-1
Unit, power brake power	5-100-1 to 5-100-212
Universal joint	16-03-1 to 16-03-20
Universal joint body	16-04-1
Universal joint centering button	16-06-1 to 16-06-3
Universal joint cover	16-07-3 to 16-07-4
Universal joint cross	16-08-6 to 16-08-7
Universal joint cross roller and bushing	16-10-1 to 16-10-3
V	
Valve, exhaust	9-39-6 to 9-39-21
Valve, intake	9-39-1 to 9-39-5
Valve, manifold heat control	9-59-13 to 9-59-15
Valve, oil pressure relief	10-22-11 to 10-22-41
Valve, power brake vacuum check	5-105-1 to 5-105-6
Valve body and valves, automatic 3 speed transmission	21-139-4 to 21-139-143
Valve push rod	9-42-14
Valve rocker	9-43-1 to 9-43-26
Valve tappet	9-41-1 to 9-41-4
Valves, steering gear, power steering	19-57-1 to 19-57-64
Valves and valve body, automatic 3 speed transmission	21-139-4 to 21-139-143
Vent, cowl	23-61-39 to 23-61-116
Vent system, crankcase closed	10-02-53 to 10-02-67
Vent wing	23-64-4 to 23-64-314
Visor	1-32-2
Visor, arm and bracket	23-103-10 to 23-103-48
Visor, bracket and arm	23-103-10 to 23-103-48
Visor trim panel	23-103-3 to 23-103-48
W	
Washer, windshield	1-82-2 to 1-82-44
Water pump	7-42-1 to 7-42-4
Water pump elbow	7-48-22

MyMopar.com

PART NAME	CODE
Water pump gasket	7-44-3 to 7-44-4
Water pump housing	7-43-1 to 7-43-8
Water pump impeller	7-45-31
Water pump nipple	7-48-22
Water pump seal	7-46-1
Weathercord	23-113-2 to 23-113-87
Weatherstrip and seal	23-63-14 to 23-63-182
Weight, wheel balance	22-09-1
Wheel	22-01-5 to 22-01-56
Wheel, steering, power steering	19-30-4
Wheel, steering, standard steering	19-30-4
Wheel balance weight	22-09-1
Wheel brake adjuster	5-20-1 to 5-20-20
Wheel brake cylinder	5-64-1 to 5-64-2
Wheel brake shoe and lining	5-03-1 to 5-03-23
Wheel brake shoe guide	5-26-1 to 5-26-5
Wheel brake shoe hold-down spring	5-26-1 to 5-26-5
Wheel brake support	5-13-1 to 5-13-35
Wheel cylinder bleeder screw	5-67-1
Wheel cylinder boot	5-69-1
Wheel cylinder piston	5-70-1
Wheel cylinder piston cup	5-71-1 to 5-71-2
Wheel cylinder piston push rod	5-12-1
Wheel cylinder repair package	5-63-1 to 5-63-3
Wheel driving stud and nut	22-05-14 to 22-05-24
Wheel hub	22-05-14 to 22-05-24
Window	23-64-4 to 23-64-314
Window glass run	23-42-13 to 23-42-59
Window lift (electric window)	23-41-4 to 23-41-281
Window lift (manual)	23-39-2 to 23-39-53
Window safety switch	1-50-1
Windshield	23-66-65 to 23-66-235
Windshield washer	1-82-2 to 1-82-44
Windshield wiper	23-67-2 to 23-67-206
Windshield wiper switch	23-67-160
Wing, vent	23-64-4 to 23-64-314
Wiper, windshield	23-67-2 to 23-67-206
Wiring, chassis and body	8-15-2 to 8-15-53
Wiring instrument panel	8-19-2 to 8-19-87

Y

PART NAME	CODE
Yoke, propeller shaft sliding	16-14-1 to 16-14-8
Yoke, radiator	7-26-2 to 7-26-37

MyMopar.com

NUMERICAL INDEX

PART NUMBER	CODE
Standard Parts not listed in this index.	
50 082	9-05-6
53 298	9-07-12
106 650	8-17-2
106 652	8-17-2
106 751	9-17-5
115 273	8-44-1
116 000	23-19-94
117 142	8-17-2
120 114	8-17-2
120 151	8-17-2
120 585	23-09-64
126 049	8-17-2
127 934	8-44-1
128 027	2-08-68
	2-10-68
131 282	8-44-1
133 781	23-09-64
138 212	21-136-229
140 032	19-30-18
142 303	8-44-1
142 304	8-44-1
142 306	8-44-1
142 307	8-44-1
142 308	8-44-1
142 311	8-44-1
142 312	8-44-1
142 446	8-44-1
142 447	8-44-1
142 449	8-44-1
142 450	8-44-1
142 451	8-44-1
142 452	8-44-1
142 453	8-44-1
142 454	8-44-1
142 455	8-44-1
142 456	8-44-1
142 457	8-44-1
142 864	8-17-2
145 032	19-30-18
145 416	8-44-1
145 511	8-17-2
147 683	8-17-2
147 684	8-17-2
147 685	8-17-2
147 686	8-17-2
148 086	8-17-2
148 314	23-04-229
148 511	8-17-2
149 559	8-17-2
150 866	8-17-2
151 559	8-44-1
151 567	8-44-1
151 576	8-44-1
151 577	8-44-1
151 578	8-44-1
151 579	8-44-1
152 191	9-08-5
152 240	8-44-1
152 244	8-44-1
152 280	8-44-1
152 299	3-08-2
162 402	23-19-59
169 111	23-02-18
180 020	23-64-76
180 077	9-23-10
180 078	4-10-15
180 175	23-54-4
180 190	17-23-56
219 281	14-29-33
255 627	23-48-99
273 503	21-30-22
273 703	3-32-9
273 705	2-08-68
274 004	8-44-1
274 020	8-44-1
274 148	8-44-1
274 461	14-67-2
307 555	6-14-10
308 247	3-11-14
314 926	6-14-10
314 948	3-03-8
327 072	14-13-6
381 875	9-39-16
	9-39-17
443 716	23-06-22
444 614	9-46-4
444 688	4-10-15
445 635	8-17-2
455 107	8-17-2
456 098	8-52-50
456 867	23-06-25
	23-19-200
566 170	19-02-18
579 445	16-03-7
600 073	7-16-54
601 014	5-13-10
601 108	21-17-7
601 864	3-11-13
602 820	16-03-19
605 004	16-03-16
611 898	8-16-8
617 115	8-55-162
618 621	10-22-40
618 622	10-22-41
620 521	21-19-2
629 768	16-06-1
631 217	6-24-7
	19-48-16
	21-30-426
631 809	21-19-15
631 810	21-19-15
631 823	21-09-23
	21-19-15
631 824	21-09-23
	21-19-15
631 825	21-09-23
	21-19-15
631 877	21-09-25
632 258	19-48-20
	21-30-426
638 637	16-03-3
640 280	21-19-15
640 331	21-19-15
640 332	21-09-23
	21-19-15
644 069	21-30-45
	21-30-49
658 998	6-19-3
660 146	6-13-8
663 480	3-08-1
665 151	8-16-10
666 790	24-28-72
666 924	21-11-9
666 927	21-11-2
	21-25-2
667 774	14-11-3
670 776	9-46-228
	21-136-235
672 709	21-09-33
683 057	9-62-1
688 900	11-10-26
692 166	5-62-7
	5-116-32
697 812	21-25-4
698 403	3-11-2
698 404	3-11-1
842 295	24-25-14
852 750	10-26-27
855 521	6-16-1
857 999	16-08-6
858 006	16-10-2
859 882	6-13-4
859 903	8-27-259
862 173	21-17-7
866 591	6-16-1
869 770	23-48-113
870 469	10-01-40
	14-86-49
	19-15-33
	19-15-111
	19-58-25
870 539	16-07-3
870 540	16-07-3
870 821	8-16-4
883 031	5-111-17
	10-02-53
892 569	1-04-8
903 895	8-16-4
917 248	14-24-1
927 630	21-09-5
930 304	8-16-5
953 717	8-27-100
958 659	5-45-8
960 003	9-58-5
989 513	23-08-12
1067 037	6-16-1
1118 161	5-58-1
1119 423	14-90-1
1122 532	9-02-7
1123 152	10-26-1
1135 197	3-03-26
1135 625	19-51-17
1137 669	4-25-15
	19-48-23
	21-30-433
1139 153	21-03-24
	21-34-44
1139 204	21-02-6
1142 259	22-04-11
1152 315	1-48-396
1188 502	8-16-5
1193 106	5-39-12
1239 241	1-47-16
1242 974	7-08-20
	23-34-203
	23-61-39
1264 933	8-16-5
1267 367	8-27-231
1298 045	1-87-36
1302 807	8-56-46
	21-03-25
	21-34-46
1313 312	6-13-8
1314 619	8-42-10
1315 466	1-48-555
	7-14-9
1316 813	21-30-390
1316 815	21-119-25
1316 864	23-19-124
1318 446	5-43-1
1319 554	17-23-53
1319 555	17-23-53
1319 902	17-23-52
1320 517	10-26-49
1321 044	6-16-1
1322 503	21-30-397
	23-48-55
1323 881	10-26-26
1323 882	10-26-30
1323 883	10-26-16
1323 884	10-26-28
1323 958	13-64-56
1324 090	6-22-17
1324 268	9-43-19
1324 464	9-02-17
1324 470	9-36-7
1325 906	8-33-40
1326 091	9-10-2
1326 093	9-11-1
1326 219	3-07-1
1326 836	8-27-4
1327 471	7-03-1
1327 847	3-22-25
1327 986	8-53-305
1339 711	24-28-357
1343 212	10-24-23
1345 871	8-16-8
1370 460	8-01-4
	8-15-22
	21-84-1
	23-19-68
1377 825	24-25-260
1377 831	24-25-189
1392 371	3-03-35
	9-03-18
	9-48-9
1400 185	14-74-1
1400 269	17-16-8
1400 857	14-35-1
1401 808	3-22-24
1401 809	3-22-24
1401 810	3-22-25
1404 472	3-22-24
1406 504	6-16-1
1407 347	6-24-3
1408 853	9-02-9
1408 867	9-10-19
1408 915	13-36-5
1408 918	13-36-5
1409 594	9-58-14
1426 501	24-25-70
1432 929	23-32-79
1479 105	8-27-93
1479 232	8-36-139
1485 066	3-03-31
1485 510	17-15-28
1486 205	19-01-61
	19-56-6
1489 747	17-15-1
1495 160	23-67-119
1520 675	23-47-22
1523 160	1-82-8
1527 974	8-27-207
1530 398	17-15-30
1532 943	16-07-3
1533 121	7-03-1
1533 190	19-48-21
	21-30-426
1533 532	7-03-1

MyMopar.com

PART NUMBER	CODE
1533 923	21-03-40
1536 242	9-10-26
1536 267	21-42-31
1536 268	4-10-27
	19-56-90
	21-30-347
1536 359	10-22-8
1539 430	21-139-49
	21-139-98
	24-28-230
1540 383	23-67-82
1544 841	23-08-12
1550 358	10-22-17
1550 359	10-22-46
1550 711	21-136-55
1551 766	13-64-5
1554 593	6-13-4
1556 082	21-138-26
1556 385	19-02-15
1556 556	16-20-8
1556 638	16-20-8
1556 675	5-39-21
1556 693	4-19-1
	21-30-394
1557 575	10-26-27
1557 581	10-26-65
1557 584	10-26-37
1558 352	17-29-21
1558 897	9-59-13
1561 065	23-64-263
1571 034	23-67-119
1594 834	23-47-432
1594 992	23-67-20
1594 993	23-67-102
1594 995	23-67-100
1595 160	1-48-555
1603 364	11-02-1
1603 365	11-02-1
1603 397	16-07-4
1604 116	1-48-90
	24-01-26
1605 267	24-28-235
1605 271	1-48-688
1605 298	23-58-399
1605 299	23-67-80
1605 604	23-67-82
1613 388	2-14-13
1613 782	9-48-43
1614 009	7-03-1
1614 666	9-39-17
1616 185	16-03-20
1617 781	7-03-1
1618 157	14-35-1
1618 610	19-58-15
1618 611	19-58-31
1618 668	7-48-22
1618 671	9-43-9
1618 683	9-23-18
1618 686	9-07-17
1618 695	9-03-10
	9-10-19
1618 696	9-03-10
1618 701	9-31-10
1618 718	9-15-2
1618 732	9-15-10
1618 738	9-36-5
1618 739	9-36-5
1618 740	9-36-5
1619 627	9-48-56
1622 064	1-48-24
1622 352	23-67-82
1622 535	8-01-11
1622 535	8-01-20
1622 536	8-01-12
	8-01-21
1623 104	23-02-107
1623 132	8-11-12
1624 506	7-08-7
1624 582	12-06-3
1626 749	14-14-16
1627 273	23-67-16
1630 878	21-25-6
1630 896	21-136-15
1631 353	14-35-8
1631 502	14-43-5
1632 106	9-43-14
1632 519	9-10-5
1632 522	9-16-6
1632 523	9-16-6
1632 524	9-16-6
1632 525	9-16-6
1632 526	9-16-6
1633 214	19-51-16
1633 217	19-51-10
1633 669	21-09-19
1633 718	21-09-5
	21-19-2
1633 763	21-15-33
1633 928	3-08-1
1633 937	3-08-2
1633 959	3-07-1
1633 960	3-06-6
1633 961	3-07-2
1634 508	6-24-6
1634 619	2-07-2
1634 984	3-03-3
1635 098	16-03-20
1635 282	21-24-2
1635 290	21-12-1
1635 293	21-12-2
	21-24-22
1635 588	17-23-52
1635 600	3-01-28
1635 666	17-15-1
1636 010	2-10-76
1636 067	19-58-14
1636 423	21-139-30
1636 461	21-138-13
1636 462	21-138-13
1636 464	21-138-19
1636 465	21-138-19
1636 470	21-137-8
1636 570	11-06-8
1637 721	9-42-1
1637 782	5-29-1
1638 461	21-138-29
1639 171	2-14-15
1639 597	9-59-15
1639 947	9-39-21
1639 961	23-02-84
1641 578	23-58-396
1641 579	23-58-395
1641 903	7-08-15
1642 029	23-67-80
1643 151	9-09-2
1643 152	9-09-2
1643 153	9-09-2
1643 154	9-09-2
1643 155	9-09-2
1643 156	9-09-2
1645 615	23-47-75
1651 300	23-34-27
1651 396	23-15-3
1651 397	23-15-3
1651 400	23-15-1
	23-15-3
1651 431	23-66-135
1651 493	23-14-153
	23-38-29
1652 067	23-34-123
	23-54-118
1652 093	14-11-3
1658 534	8-27-71
1658 535	8-27-300
1658 571	8-52-395
1658 638	24-25-156
1658 660	8-34-178
1669 337	5-71-1
1670 299	19-27-40
	19-27-55
1670 356	19-19-36
1670 476	9-43-26
1670 508	9-50-5
1670 694	14-86-85
1671 405	2-10-68
1671 446	2-14-15
1671 569	19-48-52
1671 586	19-02-20
1671 587	19-02-21
1671 610	14-88-27
1672 194	21-04-11
1672 287	21-137-8
1672 960	2-08-62
1672 961	2-10-67
1672 964	17-29-5
1672 980	19-27-50
1672 988	17-29-16
1672 989	17-29-13
1673 060	17-29-11
1673 065	17-29-10
1673 090	17-29-15
1673 184	4-10-3
	21-30-394
1673 367	3-03-25
1673 458	17-11-5
1673 646	9-45-2
1673 649	7-03-1
1673 650	7-03-1
1673 974	19-02-17
1674 746	7-02-16
1675 271	19-19-40
1675 485	3-20-1
1675 821	17-24-28
1675 958	10-24-23
1676 197	21-14-6
1676 200	21-42-42
1676 692	14-35-1
1676 717	14-35-1
1676 770	14-35-1
1676 821	14-35-8
1686 107	7-12-1
1686 198	7-13-2
1686 412	7-08-2
1686 414	7-08-2
1686 451	7-08-13
1686 453	7-08-13
1686 914	12-01-10
1688 207	8-35-41
1689 670	24-01-33
1689 692	1-48-46
1690 742	23-20-19
1690 871	23-66-135
1691 275	23-10-18
	23-15-14
1691 899	23-19-85
1691 911	23-58-229
1692 172	23-20-19
1692 173	23-20-19
1695 431	23-14-21
1695 607	23-39-45
	23-41-250
1698 140	23-02-42
1698 868	23-06-14
1704 061	23-67-91
1704 062	23-67-48
1704 063	23-67-48
1704 066	23-67-49
1704 467	8-42-10
1704 875	8-05-12
	8-11-8
1706 470	23-54-27
	23-58-605
1707 493	23-14-153
1708 248	23-04-229
1708 914	23-58-336
1708 998	23-64-237
1730 009	5-29-1
1730 019	6-43-13
1730 095	14-72-47
1730 155	7-02-16
1730 160	3-01-25
1730 366	7-14-9
1730 985	19-19-35
1731 228	5-28-8
	6-39-2
1731 341	17-29-15
1731 415	19-27-2
1731 525	9-07-8
1731 769	3-01-30
1732 198	4-08-35
1732 946	19-54-181
1732 948	19-54-258
1733 488	19-54-86
1733 562	19-01-61
1733 577	19-19-4
1733 588	19-14-13
1733 593	19-01-52
1733 601	19-19-24
1733 602	19-14-18
1733 612	19-57-13
1733 615	19-19-26
1733 625	19-14-19
1733 627	19-19-32
1733 724	19-57-16
1733 790	19-01-53
	19-19-30
1733 791	19-01-51
1733 805	7-06-3
1733 893	7-03-1
1734 159	16-04-1
1734 315	17-29-20
1734 321	2-10-59
1734 327	19-27-34
1734 341	2-10-60
1735 128	13-54-15
1735 941	7-02-1
1736 012	9-58-13
1736 347	9-46-94
1736 348	9-46-94
1736 353	9-46-94
1736 432	21-04-12
1736 521	21-133-46
1737 430	13-64-5
	13-66-15
1737 622	9-17-5
1737 645	9-43-1
1737 646	9-43-1
1737 694	9-31-5
1737 695	9-31-7
	9-48-44
1737 698	9-39-6
1737 705	7-44-3
1737 709	9-50-6
1737 718	10-07-10
1737 725	10-09-7
1737 742	10-22-15

MyMopar.com

PART NUMBER	CODE
1737 745	14-77-17
1737 756	9-43-5
1737 757	9-42-1
1737 761	7-44-4
1737 770	10-24-8
1737 771	9-23-18
1737 925	7-03-1
1737 926	7-03-1
1738 268	5-46-1
1738 678	19-54-130
1738 683	19-54-188
1738 794	3-22-27
1738 795	3-22-27
1738 796	3-22-27
1738 797	3-22-27
1738 798	3-22-27
1738 799	3-22-27
1738 800	3-22-27
1738 801	3-22-27
1738 802	3-22-27
1738 805	3-22-28
1738 806	3-22-28
1738 807	3-22-28
1738 812	3-22-27
1738 813	3-22-27
1738 814	3-22-27
1738 815	3-22-27
1738 816	3-22-27
1738 817	3-22-27
1738 818	3-22-27
1738 819	3-22-27
1738 820	3-22-27
1738 823	3-19-1
1738 826	3-22-26
1738 831	3-22-45
1739 194	14-86-13
1739 196	14-86-24
1739 215	5-62-1
1739 226	5-52-3
1739 230	5-53-6
	14-67-2
	14-89-57
	21-30-380
1739 249	5-62-1
1739 355	8-36-4
1739 359	9-41-4
1739 534	9-39-15
1739 547	14-29-6
1739 600	9-48-6
1739 604	10-09-5
1739 605	9-03-10
1739 606	9-03-10
1739 612	9-39-6
1739 613	9-39-6
1739 614	9-39-6
1739 619	10-26-5
1739 912	16-08-7
1739 913	16-10-1
1739 915	16-14-1
1739 920	16-04-1
1739 923	16-03-7
1739 924	16-06-1
1739 926	16-06-3
1739 927	16-03-10
1740 029	24-26-21
	24-28-22
1744 046	7-03-1
1747 962	24-25-258
1747 982	24-25-168
1747 988	24-25-252
1750 445	23-34-116
1750 484	23-15-21
1750 565	23-15-1
	23-15-3
1750 602	23-15-21
1750 619	23-58-257
1750 686	23-10-2
1750 724	23-58-248
1750 726	23-58-603
1750 777	23-58-232
1750 854	23-58-232
1750 855	23-58-232
1751 156	23-58-243
1751 173	23-58-253
1751 182	23-31-145
1751 262	23-58-266
1751 264	23-58-265
1751 489	23-64-279
1751 492	23-64-278
1751 570	23-63-126
1751 571	23-63-126
1751 793	23-36-21
1752 488	8-16-3
1752 489	8-16-3
1752 490	8-16-3
1752 491	8-16-3
1752 518	23-67-16
1752 624	16-03-1
1753 435	8-34-175
1753 436	8-34-175
1753 579	24-28-84
1753 632	8-14-3
	8-31-16
	8-37-88
	21-30-28
1753 681	23-41-95
1753 712	23-67-203
1754 294	12-07-1
1754 295	12-07-1
1755 366	23-64-237
1758 076	23-10-17
1758 839	23-58-228
1759 368	23-58-266
1769 318	24-25-219
1770 289	23-67-82
1770 290	23-67-82
1770 660	8-16-4
1774 024	23-54-6
1774 025	23-54-6
1775 164	23-54-79
1777 881	23-34-123
1777 926	23-54-27
1778 955	23-41-138
	23-54-152
1779 257	1-48-572
	24-01-87
1779 885	1-48-555
1779 901	23-41-186
1790 523	3-11-1
1810 453	23-61-39
1810 565	23-34-116
1810 910	23-20-19
1818 524	9-09-2
1818 525	9-09-2
1818 526	9-09-2
1818 527	9-09-2
1818 528	9-09-2
1818 529	9-09-2
1818 650	8-27-310
1818 698	9-32-2
1818 699	9-32-2
1818 700	9-32-2
1818 701	9-32-2
1818 702	9-32-2
1818 703	9-32-2
1818 757	8-27-190
1818 830	8-53-327
1819 014	1-47-6
	1-87-22
1819 228	23-47-344
1819 230	23-47-413
1819 239	23-47-344
1819 240	23-47-244
1819 317	23-17-52
1819 409	1-87-5
1819 441	8-38-4
1819 470	1-47-17
1819 689	1-48-712
1819 697	1-48-712
1819 836	8-16-4
1819 843	24-25-156
1820 152	17-15-25
1820 153	17-15-25
1820 318	11-02-4
1820 319	11-02-4
1820 454	6-13-4
1820 551	3-22-25
1820 552	3-22-24
1820 698	3-03-3
1820 703	3-22-28
1820 704	3-22-28
1820 705	3-22-28
1820 706	3-22-28
1820 813	17-15-25
1820 812	17-15-25
1821 138	7-03-1
1821 144	14-29-3
1821 170	14-29-5
1821 177	9-07-8
1821 394	8-36-124
1821 411	7-06-1
1821 414	9-07-8
1821 449	7-06-1
1821 452	7-06-14
1821 684	7-03-1
1821 771	9-16-6
1821 772	9-16-6
	9-16-17
1821 773	9-16-6
1821 774	9-16-6
1821 775	9-16-6
1822 134	19-01-50
1822 149	19-01-52
1822 150	19-01-51
1822 151	19-01-52
1822 156	19-15-63
1822 157	19-15-65
1822 158	19-15-60
1822 203	19-19-35
1822 204	19-19-9
1822 320	19-19-72
1822 321	19-01-62
1822 324	19-19-70
1822 380	19-57-63
1822 390	19-15-69
1822 406	19-19-71
1822 442	19-56-83
1822 671	19-56-6
1822 672	19-56-6
1822 736	19-15-38
1823 091	19-01-52
1823 150	19-02-15
1823 151	19-57-64
1823 157	19-01-60
1823 161	19-01-60
1823 543	21-136-229
1823 940	21-137-44
1823 941	21-137-41
1824 934	17-29-14
1824 935	17-29-12
1824 936	17-29-12
1825 289	2-08-49
1825 314	2-08-48
1825 317	2-08-7
1825 334	2-08-48
1825 350	2-10-62
1825 351	5-13-10
	19-27-46
1825 449	2-08-71
1825 582	2-14-19
1825 761	2-08-61
1825 762	2-10-66
1825 903	7-03-1
1825 932	7-02-16
1825 956	7-02-16
1826 053	7-06-1
1826 056	19-54-86
1826 057	19-54-115
1826 058	19-54-115
1826 286	14-29-33
1826 348	14-43-5
1826 369	14-41-3
1826 607	14-41-3
1826 863	14-30-28
1826 864	14-30-27
1828 352	13-34-3
1828 388	5-40-1
1828 389	5-44-8
1828 396	5-52-62
1828 456	14-86-57
1828 461	5-52-3
1828 725	3-22-28
1828 824	16-10-3
1829 383	6-52-10
1829 440	3-22-28
1829 441	3-22-28
1829 442	3-22-28
1829 443	3-22-28
1829 444	3-22-28
1829 445	3-32-9
1829 446	3-08-1
1829 447	3-06-8
1829 448	3-06-5
1829 449	3-07-1
1829 817	4-08-36
1829 825	24-28-378
1829 929	17-15-24
1829 998	3-01-33
1829 999	3-01-33
1830 216	23-47-431
1830 217	23-47-431
1830 218	23-47-431
1830 236	23-47-12
1830 237	23-47-12
1830 289	23-47-353
1830 290	23-47-414
1830 345	23-47-432
1830 347	23-47-432
1830 349	23-47-432
1830 415	23-06-28
1830 633	1-48-365
1838 289	23-67-18
1838 508	8-27-76
1838 516	8-27-300
1839 303	23-47-15
1839 345	1-48-389
1839 845	1-76-2
1839 956	23-20-16
1839 965	23-21-26
1839 966	23-21-46
1839 967	23-21-47
1839 995	23-06-49
	23-06-54
	23-26-26
1841 449	8-36-14
1841 679	23-67-79
1841 775	8-34-175
1841 893	8-55-57
1842 003	8-16-8

MyMopar.com

PART NUMBER	CODE
1842 009.	8-16-4
1842 965.	1-47-19
1842 997.	24-28-19
1843 004.	9-34-5
1843 005.	9-34-5
1843 006.	9-34-5
1843 007.	9-34-5
1843 008.	11-02-1
1843 009.	11-02-1
1843 010.	11-02-1
1843 034.	8-27-308
1843 226.	8-16-1
1843 251.	5-53-3
1843 252.	5-53-3
	14-86-50
1843 253.	5-53-3
	9-46-27
	14-89-2
1843 254.	5-53-3
1843 257.	5-53-4
1843 258.	5-53-4
1843 316.	9-34-5
1843 317.	9-34-5
1843 318.	9-34-5
1843 330.	9-35-1
1843 331.	9-35-1
1843 332.	9-35-1
1843 346.	8-27-292
1843 444.	8-16-1
1846 350.	23-67-129
1850 370.	3-04-6
1851 248.	7-06-14
1851 314.	19-54-115
1851 579.	9-03-5
1851 608.	7-04-10
1851 658.	10-26-6
1851 664.	9-50-6
1851 669.	9-42-1
1851 732.	19-54-86
1852 020.	14-39-45
1852 248.	9-39-6
1852 251.	9-39-6
1852 252.	9-39-6
1852 253.	9-39-6
1852 259.	10-22-53
1852 582.	7-06-14
1852 606.	7-06-1
1852 910.	9-10-5
1852 911.	9-10-5
1852 914.	9-10-5
1852 915.	9-10-5
1852 920.	19-54-248
1852 932.	24-25-15
1853 695.	21-11-1
1854 274.	21-139-95
1854 275.	21-139-95
1854 449.	21-22-2
1854 829.	24-25-160
1854 895.	7-03-1
1854 953.	9-43-1
1854 990.	9-48-6
1855 042.	9-39-15
1855 152.	7-06-1
1855 238.	9-43-3
1855 328.	10-07-12
1855 393.	9-05-5
1855 561.	9-07-22
1855 605.	9-05-5
1856 292.	19-15-63
1856 346.	17-11-7
1856 347.	17-11-7
1856 492.	21-30-375
1856 942.	16-17-1
1857 549.	2-14-12
1857 576.	2-14-25
1857 682.	2-10-10
1857 748.	19-27-40
1857 774.	2-14-3
1857 775.	2-14-3
1857 776.	2-14-3
1857 777.	2-14-3
1857 778.	2-14-3
1857 779.	2-14-3
1857 840.	2-08-11
1857 856.	2-08-5
1857 857.	2-08-5
1857 901.	2-10-58
1857 906.	17-29-5
1857 911.	17-29-18
1857 992.	2-10-6
1857 993.	2-10-7
1858 015.	19-27-50
1858 017.	19-27-2
1858 024.	2-10-76
1858 067.	19-27-31
1858 084.	2-03-3
1858 100.	17-29-6
1858 101.	17-29-6
1858 105.	17-29-9
1858 115.	2-07-17
	2-08-72
	2-10-64
	19-27-51
1858 160.	2-10-6
1858 161.	2-10-7
1858 209.	2-10-66
1858 262.	2-07-41
1858 263.	2-07-41
1858 622.	24-25-15
1858 623.	9-48-7
1858 802.	9-43-19
1858 936.	14-02-12
	14-11-10
	14-13-1
	24-28-104
1858 955.	9-48-8
1859 144.	9-39-21
1859 252.	7-06-1
1859 297.	7-03-1
1859 299.	9-48-7
1859 300.	9-48-7
1859 332.	9-48-27
1859 580.	7-06-1
1859 768.	14-01-30
	14-14-56
	21-142-21
1859 767.	14-01-31
	14-14-57
	21-142-20
1859 770.	7-04-1
1859 788.	10-03-7
1859 919.	9-43-1
1860 829.	23-10-1
1861 270.	23-51-43
1861 271.	23-51-43
1861 416.	23-51-6
1861 418.	23-51-6
1877 318.	23-36-14
1877 319.	23-36-14
1878 031.	23-51-6
1878 112.	23-58-393
1878 226.	23-51-6
1878 227.	23-51-6
1878 228.	23-51-6
1878 893.	8-57-11
1879 270.	5-01-2
1879 271.	5-01-2
1879 272.	5-01-2
1879 273.	5-01-2
1879 291.	8-27-310
1879 312.	8-27-292
1879 333.	9-34-5
1879 335.	9-34-5
1879 336.	9-34-5
1879 337.	9-34-5
1879 339.	9-34-5
1879 340.	9-34-5
1879 378.	9-09-2
1879 379.	9-09-2
1879 380.	9-09-2
1879 381.	9-09-2
1879 382.	9-09-2
1879 383.	9-09-2
1879 509.	19-57-2
1879 520.	10-24-1
1879 579.	24-28-195
1879 595.	8-27-278
1879 596.	8-27-133
1879 598.	23-67-10
1879 606.	8-27-77
1879 607.	8-27-297
1879 609.	8-16-1
1879 617.	9-32-2
1879 618.	9-32-2
1879 619.	9-32-2
1879 620.	9-32-2
1879 621.	9-32-2
1879 622.	9-32-2
1879 627.	9-09-2
1879 628.	9-09-2
1879 629.	9-09-2
1879 630.	9-09-2
1879 638.	9-34-5
1879 639.	9-34-5
1879 640.	9-34-5
1879 648.	9-34-5
1879 649.	9-34-5
1879 650.	9-34-5
1879 747.	9-41-1
1879 827.	1-48-684
	24-28-19
1879 861.	24-28-63
1879 904.	24-01-24
1879 939.	8-01-4
1880 211.	1-48-683
	24-28-199
1880 442.	24-28-210
1881 647.	2-10-61
1881 693.	9-35-1
1881 694.	9-35-1
1881 695.	9-35-1
1881 699.	9-35-1
1881 700.	9-35-1
1881 701.	9-35-1
1881 746.	8-27-278
1881 758.	8-27-316
1881 766.	8-27-316
1881 794.	9-32-2
1881 795.	9-32-2
1881 796.	9-32-2
1881 797.	9-32-2
1881 804.	7-14-4
1881 805.	7-14-4
	7-14-5
1881 806.	7-14-4
	7-14-5
1881 809.	7-14-5
1881 810.	7-14-5
1881 812.	7-14-4
1881 938.	8-53-150
1881 945.	8-27-278
1881 946.	8-27-279
1881 955.	8-27-278
1881 956.	8-27-279
1881 996.	8-27-259
1882 735.	23-54-118
1884 405.	14-25-13
1885 608.	8-17-23
1885 826.	1-48-88
1885 836.	1-48-391
1885 835.	24-28-59
1886 101.	24-28-19
1886 109.	8-37-138
	24-28-318
1886 202.	23-67-80
1886 263.	24-28-210
1886 265.	24-28-210
1886 266.	24-28-195
1886 313.	14-02-26
1886 413.	24-28-80
1887 222.	8-20-3
1887 257.	24-28-31
1887 299.	24-28-175
1887 300.	24-28-175
1887 319.	1-82-6
1887 321.	1-82-6
1887 582.	1-47-14
1887 602.	23-67-195
1887 603.	1-47-11
	1-48-779
	23-54-171
	23-58-533
	23-67-101
	24-24-137
1887 604.	8-05-11
	8-53-312
1887 757.	24-28-176
1887 954.	8-11-12
1889 044.	8-52-150
1889 066.	8-52-76
1889 079.	8-52-120
1889 080.	8-52-241
1889 100.	8-52-4
1889 146.	8-52-345
1889 147.	8-52-88
1889 151.	8-52-375
1889 320.	8-27-292
1889 362.	8-52-369
1889 363.	8-52-176
1889 495.	8-27-308
1889 683.	8-27-250
1889 709.	8-27-292
1889 996.	8-27-259
1901 826.	23-02-18
1901 838.	23-21-74
1901 844.	23-02-43
1901 845.	23-02-43
1901 973.	23-22-152
1901 974.	23-22-145
1901 975.	23-22-145
1901 996.	23-22-145
1901 997.	23-22-145
1901 998.	23-22-145
1901 999.	23-22-145
1902 350.	23-47-26
1902 763.	7-26-18
1903 517.	8-50-349
	8-55-57
1903 791.	9-46-31
1903 792.	9-46-31
1904 950.	7-14-31
1909 914.	23-58-78
1909 917.	23-64-278
1909 918.	23-39-15

MyMopar.com

PART NUMBER	CODE
1909 944.	23-64-246
1920 101.	21-09-31
1923 765.	5-71-2
1927 232.	3-33-11
	4-25-17
	5-13-10
	6-38-1
1937 770.	3-11-2
1937 771.	3-11-1
1940 147.	6-38-23
	19-54-131
1940 300.	13-10-12
1940 301.	13-10-12
1940 304.	13-10-1
1940 596.	4-25-17
1940 621.	5-58-1
1940 725.	17-16-8
1940 893.	12-04-5
1941 007.	13-66-23
1941 600.	21-139-105
1941 601.	21-139-105
1941 602.	21-139-105
1941 603.	21-139-105
1941 623.	21-139-78
1941 624.	21-139-78
1941 648.	9-45-2
1941 667.	9-46-43
1941 699.	19-48-49
	21-42-43
1941 831.	21-129-7
	21-137-202
1941 887.	21-04-11
1942 005.	4-10-17
1942 006.	4-10-19
1942 011.	4-10-3
1942 012.	4-10-4
1942 015.	21-133-20
1942 020.	9-46-130
	21-118-42
1942 021.	21-118-45
1942 041.	21-129-7
1942 054.	21-133-17
1942 057.	21-133-25
1942 063.	21-133-43
1942 064.	21-133-43
1942 065.	21-133-43
1942 069.	16-02-5
1942 080.	21-133-47
1942 081.	21-133-48
	21-134-30
1942 095.	21-136-231
1942 096.	21-136-233
1942 109.	21-138-38
1942 120.	21-136-15
1942 123.	21-137-8
1942 130.	21-137-19
	21-137-59
1942 132.	21-136-23
1942 133.	21-136-30
1942 137.	21-136-47
1942 141.	21-136-52
1942 149.	21-137-53
1942 150.	21-137-56
1942 152.	21-137-47
1942 153.	21-137-200
1942 161.	4-10-11
1942 163.	4-10-8
1942 174.	21-85-61
1942 187.	9-46-229
	21-136-236
1942 199.	4-10-2
1942 213.	21-139-64
1942 218.	21-139-63
1942 225.	21-139-24
1942 227.	21-139-135
1942 228.	21-139-135
1942 230.	21-139-135
1942 231.	21-139-108
1942 233.	21-139-144
1942 237.	21-139-154
1942 245.	21-139-63
1942 248.	21-03-6
1942 259.	21-84-28
1942 389.	21-129-13
1942 390.	21-129-24
1942 395.	21-133-15
1942 396.	21-133-17
1942 397.	21-133-17
1942 399.	21-133-22
1942 400.	21-133-25
	21-133-43
1942 401.	21-22-2
1942 402.	21-133-39
1942 403.	21-133-38
1942 414.	21-133-20
1942 415.	21-133-25
1942 419.	21-129-10
1942 421.	21-133-43
1942 422.	21-133-25
	21-133-43
1942 423.	21-133-25
	21-133-43
1942 434.	21-133-40
1942 438.	21-133-42
1942 439.	21-133-46
1942 443.	21-134-38
1942 444.	21-134-40
1942 447.	21-134-45
1942 448.	21-134-40
1942 450.	21-134-36
1942 458.	21-137-53
1942 463.	21-118-40
1942 467.	21-133-20
1942 477.	21-136-17
1942 478.	21-137-5
1942 481.	21-137-22
1942 482.	21-137-11
1942 485.	21-137-13
1942 486.	21-137-19
1942 487.	21-136-30
1942 491.	21-136-47
1942 493.	21-136-49
1942 497.	21-136-41
1942 543.	21-136-52
1942 544.	4-10-8
1943 547.	8-47-21
	8-47-126
	23-54-50
1943 997.	17-19-6
1944 092.	5-110-18
	9-48-8
1944 154.	5-110-18
1944 171.	14-88-27
1944 177.	14-88-21
1944 361.	17-14-10
1944 616.	9-58-12
1944 773.	9-23-5
1944 792.	19-54-246
1944 854.	9-39-15
1944 865.	9-31-5
1945 197.	14-13-5
	24-28-106
1945 318.	9-39-5
1945 319.	9-39-5
1945 320.	9-39-5
1945 321.	9-39-5
1945 343.	7-03-1
1945 384.	7-04-13
	19-54-115
	24-25-45
1945 404.	19-54-123
1945 473.	9-11-7
1945 751.	3-04-10
1945 768.	3-20-1
1945 831.	16-17-1
1946 377.	6-38-3
1946 468.	4-23-3
1946 637.	11-05-12
1946 638.	11-05-12
1946 639.	11-05-12
1946 648.	11-06-3
1946 923.	14-29-6
1946 992.	9-15-6
1947 165.	9-31-4
1947 225.	10-10-1
1947 235.	9-13-5
1947 236.	9-23-40
1947 415.	14-01-22
1947 521.	7-44-3
1947 523.	7-44-4
1947 554.	9-23-17
1947 557.	9-11-7
1947 560.	9-17-5
1947 578.	9-03-5
1947 581.	9-23-18
1947 594.	9-43-1
1947 612.	8-27-26
1947 613.	8-27-26
1947 614.	9-43-9
1947 616.	9-43-11
1947 617.	9-43-11
1947 623.	9-39-5
1947 624.	9-39-6
1947 643.	7-48-22
1947 671.	9-05-6
1947 685.	24-25-13
1947 687.	9-03-10
1947 704.	9-42-1
1947 708.	8-36-137
1947 752.	9-48-45
1947 753.	9-48-44
1947 797.	14-29-5
1947 907.	7-02-1
1947 953.	6-10-3
	10-24-23
1948 166.	11-05-1
1948 173.	11-05-4
1948 266.	11-09-3
1948 267.	11-09-3
1948 338.	17-19-3
1948 351.	17-19-20
1948 396.	17-12-12
1948 757.	14-72-9
1948 869.	17-17-3
1948 876.	17-17-4
1948 877.	17-17-5
1948 884.	17-23-56
1948 969.	13-64-13
	13-66-20
1949 176.	9-46-33
1949 343.	21-09-30
1949 345.	21-29-3
1949 346.	21-29-25
1949 347.	21-42-11
1949 350.	21-42-31
1949 351.	21-39-3
1949 352.	21-42-11
1949 355.	21-34-45
1949 356.	21-34-42
1949 361.	21-04-2
1949 401.	21-85-5
1949 402.	21-85-5
1949 403.	21-85-5
1949 404.	21-85-5
1949 405.	21-85-5
1949 406.	21-85-5
1949 424.	9-46-21
1949 523.	21-139-76
1949 701.	21-03-28
1949 763.	9-46-8
1949 765.	9-46-21
1949 767.	21-03-6
1949 834.	21-17-2
1949 847.	21-139-33
1949 858.	21-138-15
1949 859.	21-138-15
1950 413.	23-58-227
1950 897.	23-58-607
1952 983.	23-58-605
1954 083.	23-64-4
1954 125.	23-39-12
1954 604.	23-58-67
1954 763.	23-19-63
1960 017.	23-54-102
1960 061.	23-32-88
1960 127.	8-47-76
1960 131.	8-47-67
1960 716.	1-48-391
1960 719.	23-48-93
1960 726.	23-36-14
1960 727.	23-36-14
1961 262.	23-15-22
1961 318.	23-54-128
1961 488.	23-48-19
1961 965.	8-50-337
	8-56-10
1961 975.	23-15-5
1963 393.	23-64-12
1963 479.	8-11-8
1964 260.	23-58-601
1964 747.	23-15-10
1971 043.	1-47-4
1971 061.	1-48-572
	24-01-87
1971 463.	24-28-366
1971 478.	23-41-184
1971 521.	8-37-459
	8-53-271
1971 742.	8-17-23
1971 879.	8-42-5
1971 931.	8-12-2
1972 015.	1-88-159
1972 049.	24-24-67
1972 068.	1-88-117
1972 077.	8-35-95
1972 084.	8-35-85
1972 092.	23-41-167
1972 137.	1-06-4
1972 316.	23-58-532
1972 352.	14-02-75
1972 391.	8-33-90
1972 426.	8-13-2
1972 757.	8-37-188
1972 759.	8-37-188
1972 781.	24-01-36
1972 789.	24-28-48
1972 898.	23-54-170
1972 906.	14-02-23
1972 972.	8-34-177
1984 152.	24-25-160
1985 513.	7-02-1
1989 202.	24-28-127
1990 584.	24-25-94
1990 598.	24-25-94

MyMopar.com

PART NUMBER	CODE
1992 947.	24-25-133
1993 725.	24-25-10
1994 408.	24-25-137
1994 410.	24-25-135
1996 845.	24-25-114
1997 553.	24-28-248
1998 639.	24-25-110
1998 645.	24-26-26
1999 182.	24-25-45
1999 184.	8-28-15
1999 185.	24-25-15
1999 502.	24-25-84
2000 083.	24-25-84
2003 056.	24-25-15
2003 058.	24-25-20
2003 059.	7-02-16
2003 060.	24-25-45
2003 062.	24-25-15
2003 103.	24-25-15
2004 756.	24-26-100
2004 766.	24-25-35
2004 767.	24-25-45
2004 773.	24-26-100
2006 374.	24-25-35
2006 395.	24-25-232
2006 396.	24-25-20
2006 397.	24-25-157
2007 168.	24-25-107
2008 386.	24-25-107
2008 388.	24-25-135
2010 211.	24-27-5
2011 445.	7-06-1
2011 449.	24-28-8
2013 033.	24-27-15
2013 035.	24-27-15
2013 062.	24-28-300
2013 063.	24-28-300
2013 081.	24-28-98
2013 082.	24-28-98
2013 085.	24-28-248
2013 097.	24-28-98
2013 098.	24-28-98
2013 108.	24-28-70
2013 171.	24-28-220
2013 175.	24-28-195
2013 183.	24-24-167
2013 184.	24-28-210
2013 185.	24-28-210
2013 192.	24-28-241
2013 205.	24-28-8
2013 218.	24-24-5
2013 691.	24-26-20
2013 722.	24-28-11
2013 732.	24-28-5
2013 737.	24-28-11
2013 742.	24-28-11
2013 760.	24-28-70
2013 779.	24-28-5
2013 788.	24-27-9
2013 996.	24-25-45
2014 003.	24-27-15
2014 004.	24-27-15
2014 005.	24-24-124
2014 006.	24-25-13
	24-25-45
2014 008.	24-25-15
2014 009.	24-28-19
2014 012.	24-28-8
2014 018.	24-28-5
2014 022.	24-28-5
2019 681.	24-25-160
2019 689.	24-25-5
2021 190.	24-25-154
2021 191.	24-25-246
2021 209.	24-25-5
2070 023.	3-06-5
2070 024.	3-06-6
2070 025.	3-07-1
2070 026.	3-07-2
2070 027.	3-08-1
2070 082.	3-11-3
2070 084.	3-11-3
2070 086.	3-11-3
2070 088.	3-11-3
2070 090.	3-11-3
2070 092.	3-11-3
2070 094.	3-22-26
2070 095.	3-22-26
2070 096.	3-22-26
2070 097.	3-22-26
2070 098.	3-22-26
2070 099.	3-22-26
2070 100.	3-22-26
2070 101.	3-22-26
2070 102.	3-22-26
2070 103.	3-22-26
2070 104.	3-22-26
2070 105.	3-22-26
2070 106.	3-22-26
2070 107.	3-22-26
2070 108.	3-22-26
2070 109.	3-22-26
2070 110.	3-22-26
2070 113.	3-22-28
2070 119.	3-03-29
2070 120.	3-03-30
2070 122.	3-03-36
2070 300.	3-19-1
2070 316.	3-22-24
2070 317.	3-22-25
2070 318.	3-22-24
2070 319.	3-22-25
2070 441.	3-11-3
2070 442.	3-11-3
2070 443.	3-11-3
2070 444.	3-11-3
2070 445.	3-11-3
2070 446.	3-11-3
2070 447.	3-11-3
2070 448.	3-11-3
2070 449.	3-11-3
2070 450.	3-11-3
2070 454.	3-22-26
2070 455.	3-22-26
2070 456.	3-22-26
2070 457.	3-22-26
2070 458.	3-22-26
2070 459.	3-22-26
2070 460.	3-22-26
2070 461.	3-22-26
2070 462.	3-22-26
2070 463.	3-22-26
2070 464.	3-22-26
2070 465.	3-22-26
2070 466.	3-22-26
2070 467.	3-22-26
2070 468.	3-22-26
2070 469.	3-22-26
2070 537.	3-04-6
2070 569.	3-19-1
2070 689.	3-19-1
2070 690.	3-19-1
2070 693.	3-03-1
2070 696.	3-11-3
2070 697.	3-11-3
2070 698.	3-11-3
2070 704.	3-04-6
2070 706.	3-04-6
2070 709.	3-22-26
2070 774.	3-03-1
2070 782.	3-03-3
2070 808.	3-19-1
2070 809.	3-19-1
2070 816.	3-19-1
2070 817.	3-19-1
2070 820.	3-06-6
2070 821.	3-07-2
2070 824.	3-03-2
2070 845.	3-09-3
2070 848.	3-11-3
2070 849.	3-11-3
2070 850.	3-11-3
2070 851.	3-11-3
2070 915.	3-19-1
2070 916.	3-19-1
2070 933.	3-33-10
2071 060.	5-39-3
2071 094.	4-23-36
2071 132.	4-23-3
2071 173.	2-14-13
2071 204.	2-08-7
2071 211.	2-10-60
2071 255.	2-08-61
2071 417.	2-10-58
2071 432.	2-03-3
2071 433.	2-03-3
2071 443.	2-10-59
2071 452.	2-08-5
2071 453.	2-08-5
2071 470.	2-10-74
2071 507.	13-11-5
2071 514.	13-11-17
2071 515.	13-11-17
2071 575.	17-29-17
2071 604.	17-29-20
2071 611.	17-29-21
2071 622.	2-14-3
2071 623.	2-14-3
2071 642.	2-10-6
2071 643.	2-10-7
2071 650.	2-03-3
2071 651.	2-03-3
2071 652.	17-29-5
2071 714.	17-23-56
2071 727.	2-10-72
2071 745.	17-29-17
2071 761.	17-17-4
2071 763.	17-17-3
2071 764.	13-54-15
2071 766.	17-11-7
2071 767.	17-11-7
2071 771.	17-15-1
2071 772.	17-17-5
2071 787.	17-15-1
2072 020.	19-02-18
2072 031.	19-15-38
2072 060.	19-15-60
2072 068.	19-15-33
2072 069.	19-15-22
2072 423.	19-27-50
2072 427.	19-27-2
2072 437.	2-07-2
2072 490.	19-27-45
2072 559.	19-27-50
2072 571.	19-27-50
2072 573.	19-27-2
2072 577.	19-27-31
2072 612.	5-62-1
	5-116-32
2072 614.	5-13-35
2072 615.	5-64-2
2072 616.	5-64-1
2072 617.	5-64-1
2072 625.	5-69-1
2072 632.	5-64-1
2072 636.	5-71-1
2072 637.	5-71-2
2072 643.	4-26-26
2072 644.	4-26-27
2072 646.	4-26-18
2072 655.	5-70-1
2072 656.	5-70-1
2072 658.	5-67-1
2072 664.	5-03-6
2072 675.	5-26-4
	5-26-5
2072 678.	5-66-6
2072 679.	5-69-1
2072 681.	5-13-9
2072 682.	5-13-9
2072 689.	4-26-17
2072 719.	5-03-23
2072 816.	5-27-6
2072 822.	5-27-21
2072 831.	6-38-14
2072 838.	6-50-12
2072 901.	6-22-19
2073 134.	4-23-15
2073 205.	4-23-6
	11-10-18
	14-14-13
2073 632.	6-43-7
2073 634.	5-27-2
2073 684.	6-13-4
2073 687.	6-20-14
2073 794.	11-10-3
2073 797.	11-10-42
2073 812.	11-10-17
2073 931.	14-86-42
2074 015.	14-88-21
2074 032.	14-88-27
2074 054.	14-86-35
2074 063.	14-86-57
2074 089.	13-36-5
2074 090.	13-36-5
2074 225.	13-64-5
	13-66-15
2074 521.	19-48-16
	21-30-428
2074 934.	5-105-1
2074 965.	5-39-18
2074 977.	5-100-5
	5-100-164
2074 979.	5-100-196
2074 986.	5-100-191
2074 990.	5-100-7
2074 998.	5-100-20
2074 999.	5-100-15
2075 000.	5-100-152
2075 001.	5-100-1
2075 005.	5-100-192
2075 006.	5-100-194
2076 088.	24-28-176
2076 174.	8-35-61
2076 232.	5-13-13
	5-102-11
	6-35-17
	6-46-7
	14-02-81
	23-67-95
2076 271.	21-84-4
2076 405.	24-29-15
2076 423.	1-47-10
2076 533.	8-35-111
	23-17-2
2076 543.	8-33-90
2076 656.	21-84-4

MyMopar.com

PART NUMBER	CODE
2080 181. . .	23-02-1
2080 201. . .	1-48-253
	23-06-14
	24-28-393
2080 329. .	23-47-383
2080 330. .	23-47-384
2080 331. .	23-47-384
2080 456. .	23-47-375
2080 466. .	23-47-386
2080 478. .	23-47-387
2080 480. . .	23-02-38
	23-06-14
2080 488. . .	23-06-41
2080 541. . .	23-21-66
2080 652. .	23-07-169
2080 653. .	23-07-169
2080 774. . .	23-21-14
2080 776. . .	23-21-26
2080 782. .	23-22-145
2080 783. .	23-22-145
2080 784. . .	23-02-2
	23-02-151
2080 827. . .	23-47-6
2080 828. . .	23-47-6
2080 875. . .	23-21-45
2080 897. . .	23-21-14
2080 951. . .	23-47-16
2080 996. . .	8-20-16
2081 074. . .	14-01-25
2081 840. . .	2-08-63
	23-32-108
2081 841. . .	2-08-63
	23-32-108
2082 205. . . .	4-23-2
2082 226. . .	23-40-82
2082 278. .	23-63-114
	23-66-239
2082 962. .	23-34-123
2082 973. . .	23-63-33
2082 974. . .	23-63-33
2082 989. . .	23-54-74
2084 005. . . .	9-09-2
2084 006. . . .	9-09-2
2084 007. . . .	9-09-2
2084 008. . . .	9-09-2
2084 029. . . .	9-41-4
2084 030. . . .	9-41-4
2084 031. . . .	9-41-4
2084 032. . . .	9-41-4
2084 044. . . .	7-14-4
2084 045. . .	2-10-57
2084 088. . .	8-52-214
2084 090. . .	8-52-344
2084 091. . .	8-52-341
2084 093. . .	8-52-49
2084 094. . .	8-52-354
2084 166. . .	14-35-1
2084 215. . .	19-15-39
2084 269. . .	23-67-16
2084 295. .	24-28-379
2084 301. . .	8-27-279
2084 354. . .	10-07-3
2084 355. . .	10-07-2
2084 381. . . .	9-32-2
2084 382. . . .	9-32-2
2084 384. . . .	9-34-5
2084 385. . . .	9-34-5
2084 386. . . .	9-34-5
2084 387. . . .	9-34-5
2084 388. . . .	9-34-5
2084 389. . . .	9-34-5
2084 390. . . .	9-34-5
2084 403. . . .	9-10-5
2084 404. . . .	9-10-5
2084 405. . . .	9-10-5
2084 411. . . .	9-11-1
2084 415. . .	10-07-3
2084 416. . . .	9-50-1
2084 421. . . .	8-16-1
2084 424. . . .	8-16-1
2084 448. . .	8-27-137
2084 460. . .	1-48-854
2084 653. . .	8-27-352
2084 655. . .	8-27-85
2084 666. . .	8-52-140
2084 673. . .	8-29-17
2084 717. . .	14-30-27
2084 730. . .	14-41-3
2084 788. . . .	5-63-1
2084 789. . . .	5-63-1
2084 790. . . .	5-63-3
2084 791. . . .	5-63-3
2084 810. . . .	9-09-2
2084 811. . . .	9-09-2
2084 812. . . .	9-09-2
2084 813. . . .	9-09-2
2084 814. . . .	9-09-2
2084 815. . . .	9-09-2
2084 816. . . .	9-09-2
2084 817. . . .	9-09-2
2084 829. . . .	9-09-2
2084 830. . . .	9-09-2
2084 831. . . .	9-09-2
2084 832. . . .	9-09-2
2084 833. . . .	9-09-2
2084 834. . . .	9-09-2
2084 835. . . .	9-09-2
2084 836. . . .	9-09-2
2084 862. . .	1-48-599
2084 866. . .	8-27-279
2084 868. . .	8-27-308
2084 918. . .	2-10-57
2084 920. . .	2-08-59
2086 047. . .	8-35-115
2086 275. . .	23-21-14
2086 597. . .	8-05-28
2086 634. . . .	1-87-6
2092 242. . .	23-45-52
2093 136. . .	23-23-14
2093 137. . .	23-23-14
2093 580. .	23-61-103
2093 581. .	23-61-103
2093 619. .	23-22-145
2093 638. .	23-66-235
2093 981. .	23-54-219
2094 462. .	23-64-242
2094 463. .	23-64-242
2094 618. . .	8-47-126
	23-32-51
2094 869. .	23-40-148
2094 874. .	23-40-187
2094 985. .	23-34-232
	23-51-43
2095 012. . .	8-29-155
2095 038. . .	8-29-42
2095 052. . .	8-29-134
2095 076. . .	8-52-176
2095 085. . .	8-52-214
2095 094. . .	8-52-120
2095 105. . .	8-52-241
2095 112. . .	8-52-76
2095 114. . .	8-52-102
2095 116. . .	8-52-101
2095 117. . .	8-52-67
2095 118. . .	8-52-89
2095 130. . .	8-52-61
2095 133. . .	8-52-50
2095 134. . .	8-52-49
2095 150. . . .	8-52-4
2095 155. . .	8-52-375
2095 274. . .	8-27-292
2095 350. . .	8-52-67
2095 371. . .	8-28-88
2095 374. . .	8-35-41
2095 427. . .	8-29-98
2095 630. . . .	8-27-4
2095 648. . .	8-27-250
2095 740. . . .	8-27-4
2095 741. . .	8-27-292
2095 766. . .	8-36-96
2095 768. . .	8-36-96
2095 772. . .	8-36-49
2095 773. . .	8-36-49
2095 775. . .	8-36-49
2095 776. . .	8-36-49
2095 875. . . .	8-52-5
2095 922. . .	8-27-138
2095 925. . .	8-29-135
2095 945. . .	8-29-153
2096 022. .	23-47-457
2096 062. . .	8-55-40
2096 078. . .	8-37-372
2096 084. .	24-24-150
2096 089. .	23-41-170
2096 141. . .	8-55-57
	8-56-34
	8-57-79
2096 177. .	23-47-446
2096 180. . .	8-05-14
2096 181. . .	8-05-20
	8-11-16
2096 182. . .	24-28-47
2096 259. . .	24-28-25
2096 399. .	23-41-170
2096 597. . .	8-20-10
2096 599. . .	8-20-10
2096 623. . .	1-82-44
2096 648. . .	8-55-57
	8-56-34
2096 772. . .	1-47-13
2096 857. . . .	8-13-3
2096 872. . .	1-04-18
2096 899. . . .	1-04-6
2096 905. .	23-41-176
2096 908. .	23-41-176
2096 911. .	23-41-176
2096 932. . .	1-48-555
2096 989. . .	1-47-12
	1-48-151
2097 003. . .	1-48-10
	8-37-26
	8-37-512
	8-39-15
	8-40-16
	8-41-36
	8-50-156
	14-02-38
	21-30-28
	24-24-167
2097 055. . .	1-82-44
	15-14-21
	23-59-25
2097 101. .	24-25-234
2097 102. .	24-25-157
2097 103. .	24-25-234
2097 105. .	24-25-232
2097 106. . .	24-25-20
2097 152. .	24-28-384
2097 376. . .	24-28-25
2097 746. . .	1-48-125
2098 058. . .	8-27-190
2098 175. . .	8-27-292
2098 189. . .	8-27-250
2098 190. . .	8-27-292
2098 197. . .	8-27-308
2098 209. . .	8-27-308
2098 243. . .	8-36-95
2098 244. . .	8-27-158
2098 287. . .	8-29-131
2098 288. . .	8-29-131
2098 300. . .	8-28-74
2098 337. . .	8-36-114
2098 378. . .	8-36-114
2098 381. . .	8-36-114
2098 478. . .	8-29-154
2098 496. . .	8-52-120
2098 500. . . .	8-52-4
2098 512. . .	8-29-133
2098 519. . .	8-27-250
2098 633. . .	8-29-208
2098 646. . .	8-29-132
2098 660. . .	8-52-389
2098 663. . .	8-27-250
2098 664. . .	8-27-308
2098 765. . .	8-27-71
2098 770. . .	8-27-300
2098 830. . . .	8-28-3
2098 850. . . .	8-28-3
2098 980. . .	8-36-92
2098 986. . .	8-52-80
2098 987. . .	8-52-80
2099 334. . .	7-26-30
2099 335. . .	7-26-30
2099 339. . .	7-26-32
2099 555. . .	7-08-13
2099 598. . .	7-26-37
2099 599. . .	7-26-37
2099 784. . .	12-02-5
2099 944. . .	7-08-13
2099 945. . .	7-08-13
2099 963. . . .	7-08-9
2120 012. .	19-54-121
2120 016. .	19-54-219
2120 017. . .	10-26-52
	19-54-126
2120 018. .	19-54-181
2120 208. . . .	7-02-1
2120 510. . .	7-02-16
2120 514. . . .	9-42-1
2120 520. . .	7-04-16
2120 525. . .	14-11-33
2120 627. . . .	9-23-5
2120 673. . . .	7-03-1
2120 694. . . .	9-43-5
2120 814. . .	14-11-9
2120 817. .	21-142-12
2120 877. . .	14-11-3
2120 878. . .	14-11-3
2120 955. . . .	7-46-1
2121 013. . . .	7-02-1
2121 196. . . .	9-45-2
2121 223. . .	9-48-14
2121 245. . .	8-36-136
2121 250. . . .	7-03-1
2121 404. . .	10-07-11
2121 524. . . .	9-05-5
2121 530. . .	10-09-1
2121 531. . .	10-14-18
2121 535. . .	10-09-5
2121 554. . . .	9-58-5
2121 571. . .	14-02-9
	14-07-8
	14-13-3
2121 573. . .	10-24-23
2121 578. . . .	9-39-5

MyMopar.com

PART NUMBER	CODE
2121 579	9-39-5
2121 580	9-39-5
2121 581	9-39-6
2121 582	9-39-6
2121 583	9-39-6
2121 585	9-48-12
2121 600	19-54-246
2121 686	9-39-14
2121 725	9-16-6
2121 726	9-16-6
2121 727	9-16-6
2121 954	14-30-2
2121 971	7-02-1
2121 972	7-03-1
2122 254	6-14-1
2122 255	6-14-1
2122 262	6-14-4
2122 266	5-47-8
2122 359	17-12-12
2122 621	13-11-5
2122 857	17-11-5
2123 212	5-57-2
2123 218	5-58-1
2123 341	14-90-1
2123 395	11-10-42
2123 396	11-10-42
2123 456	11-10-3
2123 781	17-12-6
2123 785	17-12-12
2123 898	13-64-5
	13-66-15
2124 255	21-137-202
2124 256	21-139-117
2124 257	21-139-118
2124 258	21-133-47
2124 328	21-85-56
2124 342	21-136-5
2124 384	21-15-2
2124 386	21-15-2
2124 387	21-14-6
2124 393	21-24-2
2124 462	21-39-3
2124 463	21-39-3
2124 465	21-29-3
2124 466	21-29-25
2124 472	21-14-19
2124 473	21-25-4
2124 474	21-24-19
2124 493	21-136-47
2124 494	21-42-11
2124 499	21-09-33
2124 502	21-25-2
2124 505	21-15-33
2124 506	21-25-6
2124 508	21-19-15
2124 509	21-19-15
2124 510	21-19-15
2124 511	21-19-15
2124 518	21-09-23
2124 519	21-04-2
2124 523	21-42-11
2124 560	21-10-16
2124 561	21-10-4
2124 562	21-11-1
2124 573	21-133-20
2124 579	21-136-20
2124 588	4-10-9
2124 589	4-10-7
2124 605	21-42-23
2124 606	21-42-23
2124 607	21-04-11
2124 637	4-10-5
2124 648	4-10-24
2124 662	21-138-15
2124 663	21-138-23
2124 697	21-139-101
2124 705	9-46-130
	21-118-42
2124 715	3-02-20
	21-02-6
2124 733	21-139-67
2124 734	21-139-68
2124 736	21-139-74
2124 737	21-139-76
2124 810	21-129-10
2124 813	21-129-13
2124 814	21-133-5
2124 815	21-133-7
2124 819	21-133-15
2124 820	21-133-17
2124 821	21-133-17
2124 822	21-133-20
2124 823	21-133-22
2124 824	21-133-43
2124 825	21-133-39
2124 826	21-133-38
2124 827	21-133-36
2124 831	21-129-5
2124 833	21-133-7
2124 835	21-133-17
2124 836	21-133-7
2124 837	21-133-39
2124 844	21-136-232
2124 846	21-118-54
2124 848	21-136-15
2124 850	21-137-5
2124 851	21-137-8
2124 852	21-137-22
2124 853	21-137-11
2124 856	21-137-13
2124 857	21-136-49
2124 872	21-133-25
2124 937	21-09-2
2124 945	21-09-29
2125 013	21-03-2
2125 014	8-52-8
	21-03-29
2125 024	21-138-21
2125 057	21-03-6
2125 059	21-39-3
2125 067	21-136-20
2125 069	21-137-22
2125 090	9-46-4
2125 104	21-05-35
2125 109	21-137-205
2125 187	21-133-17
2125 890	10-24-37
	21-119-11
2126 760	19-19-19
2126 890	19-19-19
2126 946	19-02-55
2126 956	19-19-35
2126 965	19-19-36
2126 966	19-19-5
2127 012	19-02-4
2127 049	19-19-5
2127 097	19-15-63
2127 099	19-02-4
2127 104	19-19-4
2127 108	19-19-28
2127 117	19-19-4
2127 146	19-15-58
2127 154	19-19-35
2127 189	19-54-121
2127 267	19-58-7
2127 280	1-48-557
	19-58-9
	24-01-31
2127 376	19-58-14
2127 486	19-54-181
2127 507	19-58-7
2127 517	19-58-7
2127 524	19-58-14
2128 275	19-54-258
2128 323	19-54-115
2128 324	19-54-115
2128 337	19-54-86
2128 338	19-54-86
2128 347	14-11-30
2128 407	9-03-29
2128 425	7-43-8
2128 548	10-26-6
2128 571	9-64-5
2128 572	9-64-5
2128 578	19-54-86
2128 661	14-29-3
2128 773	9-64-13
	19-02-4
2128 774	9-64-18
	19-02-18
2128 776	14-06-10
2128 778	14-11-28
2128 879	14-29-3
2128 912	9-08-5
2128 933	9-58-5
2128 935	9-64-22
2128 936	9-64-22
2128 938	6-10-2
2128 939	6-10-10
2128 962	9-03-34
	9-48-38
2128 992	9-45-1
2128 994	7-41-4
2129 000	14-29-10
2129 012	9-23-17
2129 013	7-44-3
2129 019	19-54-246
2129 023	10-26-8
2129 024	10-26-27
2129 060	8-28-15
2129 150	10-26-49
2129 151	10-26-12
2129 154	8-28-36
2129 156	8-28-36
2129 203	9-15-1
2129 234	8-52-39
2129 265	7-05-1
2129 277	7-03-1
2129 284	7-03-1
2129 666	7-04-5
2129 667	7-04-5
2129 684	9-71-8
	19-54-132
2129 885	6-10-2
2129 886	6-10-10
2129 916	19-54-115
2160 500	23-45-30
2160 502	23-45-29
2161 115	23-02-1
	23-02-145
2161 119	23-02-1
	23-02-145
2161 192	8-35-111
	23-17-2
2161 291	23-47-55
2161 307	8-05-8
2161 308	8-05-6
2161 316	8-05-32
	8-11-28
2161 329	23-21-45
2161 356	23-17-24
2161 423	23-17-49
2161 973	23-33-12
2162 136	23-20-14
2162 137	23-20-14
2162 140	23-20-14
2162 141	23-20-14
2162 191	19-14-35
2162 239	1-48-383
	24-28-113
2162 245	1-48-362
	24-28-92
2162 305	23-47-6
2162 307	23-47-6
2162 351	23-17-28
2162 418	1-48-365
2162 480	19-14-38
2162 499	23-54-63
2162 503	8-35-111
	23-17-2
2162 525	1-48-356
	24-28-100
2162 531	8-35-111
	23-17-2
2162 536	23-17-49
2162 605	23-17-10
2162 610	23-17-5
2162 692	23-06-15
2162 795	5-27-9
2165 828	23-34-27
2165 829	23-34-27
2165 832	23-34-27
2165 833	23-34-27
2166 065	23-32-48
2166 182	23-34-234
2166 183	23-34-234
2166 184	23-34-234
2166 185	23-34-234
2166 230	23-36-66
2166 231	23-36-66
2166 298	23-40-85
2166 299	23-40-85
2166 302	23-40-85
2166 303	23-40-85
2166 304	23-40-85
2166 305	23-40-85
2166 306	23-40-85
2166 308	23-40-85
2166 641	12-02-5
2166 676	8-05-23
2166 743	8-05-8
2166 851	23-39-2
2166 888	23-64-308
2166 889	23-64-308
2166 909	23-59-57
2166 916	23-09-52
2166 917	23-09-52
2166 935	23-32-70
2166 936	23-09-51
2166 937	23-09-51
2166 964	23-63-104
2166 965	23-63-104
2167 196	23-42-38
2167 198	23-63-33
2167 199	23-63-33
2167 260	23-19-105
2167 326	23-64-71
2167 327	23-64-71
2167 408	23-14-10
2167 409	23-14-10
2167 620	23-42-16
2167 622	23-42-16
2167 628	23-64-242
2167 634	23-14-41
2167 643	23-18-21

MyMopar.com

PART NUMBER	CODE
2167 686	23-63-15
2167 766	23-64-308
2167 767	23-64-308
2167 780	23-09-52
2167 781	23-09-52
2167 817	23-64-308
2167 818	23-64-308
2167 844	23-64-308
2167 845	23-64-308
2167 846	23-64-308
2167 847	23-64-308
2167 853	23-64-269
2167 855	23-64-289
2167 856	23-09-64
	23-64-272
2167 857	23-64-272
2167 880	23-64-273
2167 881	23-64-273
2188 554	23-15-3
2188 555	23-15-3
2188 619	8-47-68
2188 735	23-54-165
2189 314	23-51-5
2189 315	23-51-5
2189 353	23-42-46
2189 408	23-15-7
2189 711	23-58-475
2189 735	23-58-335
2189 789	23-58-572
2189 798	23-58-572
2189 900	23-47-6
2189 901	23-47-6
2189 985	23-61-104
2196 062	21-01-3
2196 082	19-54-2
2196 207	14-30-8
2196 212	14-30-7
2196 214	14-41-3
2196 234	14-41-3
2196 300	1-06-2
2196 313	23-54-167
2196 315	24-25-162
2196 483	23-58-240
2196 752	2-14-8
2196 753	2-14-8
2196 754	2-14-8
2196 755	2-14-8
2196 774	2-14-1
2196 784	17-12-4
2196 786	17-12-4
2196 905	5-39-1
2196 910	7-42-1
2196 932	19-27-31
2196 934	7-14-5
2196 998	21-138-2
2197 011	1-48-555
2197 327	8-34-178
2197 448	1-88-107
2197 450	8-34-175
2197 650	1-82-44
2197 678	1-48-254
	1-48-950
	24-28-392
	24-29-15
2197 680	8-34-175
2197 768	1-48-379
2197 945	8-16-4
2197 947	8-16-4
2198 099	23-67-79
2198 192	8-20-10
2198 361	14-02-8
2200 050	6-14-10
2200 051	6-13-1
2200 069	6-13-1
2200 341	5-44-9
2200 556	19-02-13
2200 560	10-01-62
	19-58-14
2200 801	13-11-5
2200 928	22-01-5
2201 009	13-72-2
2201 010	13-72-2
2201 039	13-72-1
2201 080	14-02-18
2201 181	5-47-4
2201 217	6-13-4
2201 218	6-13-4
2201 403	11-10-42
2201 467	4-23-38
2201 526	12-04-4
2201 536	13-33-61
2201 554	17-23-52
2201 620	19-01-12
2201 905	5-102-2
2202 380	7-04-10
2202 428	14-11-9
	14-11-18
2202 435	10-26-65
2202 472	9-46-61
2202 499	9-20-1
2202 583	14-01-23
	14-14-42
2202 666	7-06-14
2202 767	8-28-15
2202 769	7-03-1
2202 794	7-06-1
2202 836	14-29-10
2202 845	10-22-16
2202 850	19-54-123
2202 851	19-54-86
2202 942	8-28-15
2203 031	24-25-35
2203 035	24-25-45
2203 091	9-48-6
2203 106	9-23-5
2203 116	10-02-66
2203 117	10-02-67
2203 144	8-35-41
2203 195	7-04-10
2203 237	14-11-1
2203 239	14-14-1
2203 250	9-41-4
2203 252	9-41-4
2203 430	14-88-21
2203 435	14-86-35
2203 472	14-86-55
2203 473	14-86-55
2203 563	11-05-4
2203 579	11-09-3
2203 583	11-09-3
2203 677	11-10-3
2203 905	11-10-20
2203 915	11-10-3
2203 916	11-10-3
2203 924	11-10-42
2203 965	11-10-3
2203 966	11-10-3
2203 968	11-10-17
2204 170	23-32-115
2204 171	23-32-115
2204 184	2-08-63
2204 185	2-08-63
	23-32-108
2204 244	2-08-70
2204 274	6-24-14
	19-48-12
	21-30-429
2204 355	21-85-5
2204 356	21-85-5
2204 357	21-85-5
2204 358	21-85-5
2204 359	21-85-5
2204 360	21-85-5
2204 369	21-133-65
2204 403	9-46-4
2204 491	21-09-29
2204 547	21-139-108
2204 554	21-09-2
2204 576	21-139-140
2204 599	21-139-143
2204 616	21-16-3
2204 619	21-14-5
2204 622	21-133-65
2204 623	21-133-65
2204 645	21-133-15
2204 647	21-134-11
2204 648	21-134-10
2204 649	21-134-12
2204 666	21-14-5
2204 702	21-03-28
2204 709	21-118-45
2204 712	21-118-40
2204 716	21-119-15
2204 719	9-46-8
2204 728	21-03-7
2204 768	9-46-8
2204 788	21-119-15
2204 792	21-136-5
2204 820	21-136-44
2204 823	21-136-41
2204 885	21-139-191
2204 890	23-139-193
2204 929	21-119-15
2204 942	21-84-7
2204 944	21-09-2
2204 952	21-136-20
2204 975	21-139-71
2204 976	21-133-7
2204 978	21-11-9
2204 993	21-118-57
2205 034	21-139-135
2205 053	21-139-140
2205 080	21-05-12
	21-22-2
2205 131	21-34-47
2205 192	21-14-20
2205 202	21-117-5
2205 203	21-133-36
2205 233	21-133-20
2205 237	9-46-40
2205 240	21-129-23
2205 241	21-133-10
2205 242	21-129-6
2205 299	21-119-5
2205 302	21-129-23
2205 303	21-133-10
2205 322	21-04-2
2205 325	21-133-7
2205 510	9-16-6
2205 512	9-16-6
2205 514	9-16-6
2205 516	9-16-6
2205 518	7-06-1
2205 521	19-54-115
2205 549	7-45-31
2205 568	9-08-5
2205 569	9-20-1
2205 582	14-30-2
2205 858	14-68-3
2205 902	9-48-7
2205 905	9-48-6
2205 924	14-29-7
2205 958	9-39-14
2205 959	9-39-14
2206 006	8-36-124
2206 022	24-25-35
2206 095	10-07-7
2206 103	9-39-5
2206 104	9-39-5
2206 105	9-39-5
2206 106	9-39-5
2206 146	14-68-5
2206 191	19-54-115
2206 192	19-54-115
2206 193	19-54-86
2206 261	10-23-7
2206 300	7-04-6
	8-28-19
2206 315	9-10-5
2206 316	9-10-5
2206 317	10-23-7
2206 346	8-28-36
2206 347	8-28-36
2206 348	8-28-15
2206 356	7-02-1
2206 372	10-26-5
2206 376	14-29-6
2206 416	9-48-14
2206 445	8-28-36
2206 446	8-28-15
2206 447	8-28-15
2206 448	8-28-292
2206 449	8-28-292
2206 450	8-28-14
2206 458	10-24-7
2206 463	10-24-4
2206 883	17-19-10
2206 923	17-23-52
2206 925	17-23-53
2206 940	17-19-3
2206 941	17-19-3
2206 965	9-71-15
2206 974	16-02-1
2206 979	9-71-5
2207 029	2-10-58
2207 033	2-03-3
2207 036	17-29-18
2207 184	2-08-5
2207 185	2-08-5
2207 282	2-10-59
2207 296	2-10-59
2207 322	2-10-60
2207 324	2-10-65
2207 359	19-27-8
2207 408	19-27-40
2207 520	5-26-2
2207 604	5-13-9
2207 606	5-13-9
2207 918	5-62-1
2207 920	14-90-1
2207 937	5-58-1
2207 958	19-15-23
2207 959	19-15-118
2207 960	19-15-53
2208 008	4-26-28
	5-27-12
2208 074	19-27-31
2208 076	2-07-41
2208 077	2-07-41
2208 155	19-48-16
2208 156	19-48-46
2208 158	19-48-49
2208 159	19-48-50
2208 160	21-42-23
2208 172	19-48-51
2208 192	19-51-2

MyMopar.com

PART NUMBER	CODE
2208 202. . .	19-51-2
2208 210. . .	19-51-4
2208 217. . .	19-48-1
2208 218. . .	19-48-1
2208 219. . .	19-51-13
2208 268. . . .	6-16-1
2208 370. . .	11-01-1
2208 420. . .	11-05-1
2208 432. . .	11-05-1
2208 434. . .	11-05-1
2208 440. . .	11-05-1
2208 495. . . .	5-62-1
2208 496. . . .	5-62-1
2208 535. . .	14-86-1
2208 538. . .	14-86-35
2208 548. . .	14-86-40
2208 591. . .	13-33-62
2208 593. . .	12-04-4
2208 598. . .	12-04-4
2208 740. . .	13-10-1
2208 892. . . .	5-57-2
2208 893. . .	5-62-20
2209 213. . .	8-37-381
2209 214. . .	8-37-387
2209 229. . .	21-84-4
2209 343. . .	8-37-10
2216 111. . .	23-09-47
2216 152. . .	23-39-15
2216 153. . .	23-39-15
2216 172. . .	23-39-44
	23-41-7
2216 173. . .	23-39-2
	23-41-7
2216 210. . .	23-64-62
2216 211. . .	23-64-62
2216 220. .	23-64-243
2216 221. .	23-64-243
2216 276. . .	23-18-29
2216 289. .	23-14-147
2216 296. . .	23-64-12
2216 374. . .	23-63-15
2216 415. . .	23-42-59
2216 448. . .	23-26-18
2216 449. . .	23-26-18
2216 458. . .	23-15-1
2216 459. . .	23-15-1
2216 485. . .	23-09-47
2216 506. . .	23-09-35
2216 544. . .	23-09-53
2216 546. . .	23-09-61
2216 552. . .	14-63-19
	14-86-55
	15-14-20
	21-84-1
2216 618. . .	23-14-53
2216 626. .	23-64-240
2216 627. .	23-64-240
2216 631. . .	23-64-74
2216 638. .	23-63-126
2216 639. .	23-63-126
2216 640. . .	23-64-48
2216 641. . .	23-64-48
2216 645. . .	23-42-13
2216 654. . .	23-64-71
2216 655. . .	23-64-71
2216 660. .	23-64-306
2216 661. .	23-64-306
2216 662. .	23-64-306
2216 663. .	23-64-306
2216 673. .	23-64-273
2216 735. . .	1-48-357
	24-28-101
2216 742. .	23-31-146
2216 780. . .	23-42-23
2216 790. .	23-31-146
2216 818. . .	23-09-56
2216 819. . .	23-09-56
2216 827. . .	23-64-12
2216 844. . .	23-09-56
2216 920. .	23-64-242
2216 921. .	23-64-242
2217 039. . .	23-14-45
2217 044. . .	23-14-49
2217 128. . .	23-63-33
2217 129. . .	23-63-33
2217 156. .	23-64-269
2217 175. . .	23-06-22
2217 182. . .	23-64-12
2217 183. . .	23-64-12
2217 193. . .	23-64-12
2217 203. . .	23-64-12
2217 218. . .	23-36-21
2217 250. . .	23-63-97
2217 262. .	23-64-308
2217 263. .	23-64-308
2217 264. .	23-64-308
2217 265. .	23-64-308
2217 287. .	23-34-125
2217 349. . .	23-15-13
2217 351. . .	23-09-53
2217 363. . .	1-87-30
2217 369. . .	23-09-9
	23-09-52
	23-09-58
2217 404. .	23-63-126
2217 405. .	23-63-126
2217 416. . .	23-64-48
2217 417. . .	23-64-48
2217 420. . .	23-42-13
2217 429. . .	23-09-52
2217 476. .	23-64-306
2217 477. .	23-63-306
2217 478. .	23-64-306
2217 479. .	23-64-306
2217 480. . .	14-87-2
2217 508. . .	23-63-16
	23-63-183
2217 509. . .	23-64-10
2217 510. . .	23-64-10
2217 511. . .	23-09-64
2217 518. .	23-63-181
2217 530. . .	23-09-51
2217 534. .	23-34-302
2217 535. .	23-34-302
2217 536. . .	23-59-37
2217 537. . .	23-59-37
2217 548. .	23-64-242
2217 549. .	23-64-242
2217 572. . .	23-64-71
2217 573. . .	23-64-71
2217 663. . .	23-64-54
2217 704. . .	23-33-10
2217 706. . .	19-14-10
2217 738. . .	23-02-19
2217 746. . .	23-02-29
2217 747. . .	23-33-12
2217 752. .	23-22-145
2217 753. .	23-22-145
2217 784. . .	23-06-21
2217 785. . .	23-06-21
2217 791. . .	23-06-10
2217 843. .	5-100-105
2217 845. . .	19-31-7
2217 908. .	23-63-126
2217 936. . .	23-33-96
2217 952. .	23-64-308
2217 953. .	24-64-308
2217 954. .	24-64-308
2217 955. .	24-64-308
2217 956. .	23-64-308
2217 957. .	23-64-308
2217 958. .	23-64-308
2217 959. .	23-64-308
2217 974. . .	23-09-52
2217 975. . .	23-09-52
2217 984. .	23-64-308
2217 985. .	23-64-308
2217 986. .	23-64-308
2217 987. .	23-64-308
2218 059. .	23-64-269
2218 119. .	23-64-273
2218 134. . .	23-42-23
2218 192. . .	23-26-80
2218 194. . .	23-26-80
2218 196. . .	23-26-80
2218 226. .	23-64-306
2218 227. .	23-64-306
2218 228. .	23-64-306
2218 229. .	23-64-306
2218 288. . .	23-64-66
2218 301. . .	23-09-27
2218 318. . .	23-64-12
2218 326. .	23-64-308
2218 327. .	23-64-308
2218 328. .	23-64-308
2218 329. .	23-64-308
2218 348. .	23-64-308
2218 349. .	23-64-308
2218 448. . .	23-64-71
2218 449. . .	23-64-71
2218 450. .	23-63-126
2218 451. .	23-63-126
2218 452. .	23-63-126
2218 453. .	23-63-126
2218 484. . .	23-64-48
2218 485. . .	23-64-48
2218 504. .	23-64-306
2218 505. .	23-64-306
2218 512. .	23-63-127
2218 513. .	23-63-127
2218 574. . .	23-66-65
2218 575. . .	23-66-65
2218 584. . .	23-66-77
2218 585. . .	23-66-77
2218 610. .	23-22-145
2218 611. .	23-22-145
2218 612. .	23-22-145
2218 616. .	23-22-145
2218 617. .	23-22-145
2218 620. .	23-22-145
2218 621. .	23-22-145
2218 626. .	23-66-135
2218 630. .	23-66-135
2218 634. .	23-66-235
2218 683. . .	23-02-38
2218 699. . .	23-64-66
2218 700. .	23-34-176
2218 702. .	23-64-198
2218 703. .	23-64-198
2218 704. .	23-64-198
2218 705. .	23-64-198
2218 754. .	23-31-146
2218 755. .	23-31-146
2218 795. . .	23-64-68
2218 801. .	23-64-233
2218 802. . .	23-36-66
2218 803. . .	23-36-66
2218 806. .	23-64-242
2218 807. .	23-64-242
2218 817. . .	23-19-63
2218 818. . .	23-59-42
2218 819. . .	23-59-42
2218 847. . .	23-02-29
2218 849. . . .	4-23-4
2218 864. . .	23-02-18
2218 876. . .	23-63-33
2218 897. . .	23-63-33
2218 890. .	23-22-145
2218 891. .	23-22-145
2218 892. .	23-22-148
2218 946. .	23-64-308
2218 947. .	23-64-308
2218 948. .	23-64-308
2218 956. . .	23-08-75
2218 960. .	23-66-235
2218 979. . .	23-63-15
2218 980. . .	23-63-15
2218 981. . .	23-63-15
2218 982. . .	23-63-15
2218 983. . .	23-63-15
2218 995. . .	23-02-18
2219 102. . .	1-48-602
	24-28-185
2219 155. . .	24-26-35
2219 383. .	24-28-326
2219 384. .	24-28-326
2219 385. .	24-28-326
2219 837. .	24-28-220
2219 915. . .	24-29-1
2219 916. . .	24-29-1
2219 949. .	23-64-308
2219 981. . .	1-48-258
2219 982. . .	1-48-258
2229 666. . .	23-48-36
2231 105. . . .	8-19-7
2233 028. . .	8-16-10
2240 222. . . .	3-04-6
2240 264. . . .	8-16-1
2240 302. . .	21-118-6
2240 308. . .	11-02-1
2240 311. . .	11-02-1
2240 312. . .	11-02-1
2240 317. . .	17-23-3
2240 333. . . .	9-34-5
2240 334. . . .	9-34-5
2240 335. . . .	9-34-5
2240 336. . . .	9-34-5
2240 360. . .	17-23-3
2240 368. . . .	9-09-2
2240 369. . . .	9-09-2
2240 370. . . .	9-09-2
2240 371. . . .	9-09-2
2240 372. . . .	9-09-2
2240 373. . . .	9-09-2
2240 374. . . .	9-09-2
2240 375. . . .	9-09-2
2240 376. . . .	9-09-2
2240 377. . . .	9-09-2
2240 378. . . .	9-09-2
2240 379. . . .	9-09-2
2240 397. . . .	7-04-1
2240 410. . .	14-30-8
2240 436. . .	14-30-8
2240 454. . .	14-35-6
2240 464. . .	14-35-1
2240 473. . .	14-43-5
2240 529. . .	8-52-180
2240 536. . . .	8-16-1
2240 602. . .	19-02-4
2240 608. . .	8-33-39
2240 614. . .	16-20-1
2240 625. .	5-100-157
2240 634. . . .	6-17-3
2240 647. . .	10-24-1
2241 784. . .	23-63-14
2241 790. . .	23-36-6
2241 791. . .	23-36-6
2241 871. . .	8-35-111
	23-17-2

MyMopar.com

PART NUMBER	CODE
2241 943.	23-31-33
2241 944.	23-31-33
2242 102.	23-64-311
2242 359.	23-04-249
2242 368.	23-66-135
2242 369.	23-66-135
2242 370.	23-64-314
2242 371.	23-64-314
2242 390.	23-51-5
2242 391.	23-51-5
2242 394.	23-51-5
2242 395.	23-51-5
2242 396.	17-19-4
2242 425.	23-34-119
2242 426.	23-34-117
2242 439.	23-34-116
2242 442.	23-34-121
2242 443.	23-34-121
2242 450.	23-66-235
2242 452.	23-51-5
2242 453.	23-51-5
2242 460.	23-32-115
2242 461.	23-32-115
2242 464.	23-34-234
2242 465.	23-34-234
2242 493.	23-34-166
2242 514.	23-64-66
2242 515.	23-64-66
2242 516.	23-64-66
2242 517.	23-64-66
2242 520.	23-40-85
2242 521.	23-40-85
2242 528.	23-34-304
2242 529.	23-34-304
2242 530.	23-59-56
2242 531.	23-59-56
2242 532.	23-63-112
2242 534.	23-19-177
2242 535.	23-19-177
2242 548.	23-34-302
2242 549.	23-34-302
2242 734.	23-64-311
2242 735.	23-64-311
2242 740.	23-34-234
2242 741.	23-34-234
2242 762.	23-39-34
2242 763.	23-39-34
2242 764.	23-36-66
2242 765.	23-36-66
2242 776.	23-34-302
2242 777.	23-34-302
2242 780.	23-34-301
2242 781.	23-40-85
2242 782.	23-40-85
2242 783.	23-40-85
2242 784.	23-40-85
2242 785.	23-40-85
2242 786.	23-40-85
2242 787.	23-40-85
2242 788.	23-40-85
2242 789.	23-40-85
2242 790.	23-40-85
2242 796.	23-59-56
2242 797.	23-59-56
2242 800.	23-54-193
2242 810.	23-54-143
2242 812.	23-54-150
2242 813.	23-64-10
2242 814.	23-64-10
2242 818.	23-54-4
2242 819.	23-54-4
2242 825.	23-54-141
2242 827.	23-54-109
2242 836.	23-63-171
2242 837.	23-63-181
2242 848.	23-14-10
2242 849.	23-14-10
2242 854.	23-39-5
2242 855.	23-39-5
2242 866.	23-39-5
2242 867.	23-39-5
2242 868.	23-34-234
2242 869.	23-34-234
2242 928.	23-34-29
2242 929.	23-34-29
2242 988.	23-14-10
2242 989.	23-14-10
2243 012.	23-64-280
2243 013.	23-64-280
2243 035.	23-09-37
2243 158.	8-50-338
2243 220.	23-34-275
2243 221.	23-34-275
2243 222.	23-19-76
2243 223.	23-19-76
2243 236.	23-64-311
2243 237.	23-64-311
2243 238.	23-64-311
2243 239.	23-64-311
2243 240.	23-59-56
2243 241.	23-59-56
2243 242.	23-59-59
2243 243.	23-59-59
2243 256.	23-40-92
2243 257.	23-40-92
2243 274.	23-59-56
2243 282.	15-19-2
2243 283.	15-19-2
2243 320.	23-32-65
2243 327.	23-19-99
2243 336.	23-54-136
2243 337.	23-54-194
2243 338.	23-54-72
2243 343.	23-54-19
2243 346.	23-54-136
2243 348.	23-18-26
2243 349.	23-18-26
2243 390.	23-39-53
2243 470.	23-40-150
2243 472.	23-40-150
2243 473.	23-40-187
2243 476.	23-40-155
2243 477.	23-40-155
2243 513.	23-63-110
2243 526.	23-32-70
2243 546.	23-19-82
2243 547.	23-19-82
2243 552.	23-51-5
2243 553.	23-51-5
2243 556.	23-51-5
2243 557.	23-51-5
2243 568.	23-34-234
2243 569.	23-34-234
2243 589.	23-34-167
2243 594.	23-19-76
2243 596.	23-34-179
2243 598.	23-19-84
2243 788.	23-64-311
2243 789.	23-64-311
2243 800.	23-34-275
2243 801.	23-34-275
2243 802.	23-34-29
2243 803.	23-34-29
2243 804.	23-19-177
2243 805.	23-19-177
2243 820.	23-59-56
2243 821.	23-59-56
2243 822.	23-59-56
2243 823.	23-59-56
2243 830.	23-63-21
2243 832.	23-34-32
2243 835.	23-36-31
2243 842.	23-40-92
2243 843.	23-40-92
2243 870.	23-26-41
2243 871.	23-26-41
2243 874.	23-63-33
2243 875.	23-63-33
2243 876.	23-63-55
2243 877.	23-63-55
2243 882.	23-63-100
2243 883.	23-63-100
2243 938.	23-51-41
2243 939.	23-34-166
2243 942.	23-51-41
2243 972.	11-10-43
2244 007.	23-64-66
2244 027.	23-34-164
2244 101.	23-64-311
2244 123.	23-04-241
2244 130.	23-34-275
2244 131.	23-34-275
2244 149.	23-19-70
2244 180.	23-26-41
2244 181.	23-26-41
2244 192.	23-09-75
2244 193.	23-09-75
2244 224.	23-34-234
2244 225.	23-34-234
2244 226.	23-58-480
2244 227.	23-58-480
2244 228.	23-58-473
2244 229.	23-58-473
2244 234.	23-58-572
2244 235.	23-58-572
2244 244.	23-63-33
2244 245.	23-63-33
2244 310.	23-59-56
2244 311.	23-59-56
2244 321.	23-63-37
2244 350.	23-34-280
2244 351.	23-34-280
2244 416.	23-26-46
2244 417.	23-26-46
2244 581.	23-54-103
2244 652.	23-40-85
2244 653.	23-40-85
2244 706.	23-34-280
2244 707.	23-34-280
2244 742.	23-42-38
2244 743.	23-42-38
2244 880.	23-34-234
2244 881.	23-34-234
2244 889.	23-09-67
2244 894.	8-47-69
2244 902.	23-09-9
2244 903.	23-09-9
2244 904.	23-34-285
2244 905.	23-34-285
2245 002.	23-09-9
2245 003.	23-09-9
2245 048.	23-64-311
2245 049.	23-64-311
2245 050.	23-64-311
2245 051.	23-64-311
2245 070.	23-64-311
2245 071.	23-64-311
2245 072.	23-64-311
2245 073.	23-64-311
2245 080.	23-63-20
2245 081.	23-63-20
2245 082.	23-63-21
2245 083.	23-63-21
2245 091.	23-42-38
2245 092.	23-09-9
2245 093.	23-09-9
2245 098.	23-19-82
2245 099.	23-19-82
2249 810.	23-22-78
2249 811.	23-22-78
2251 117.	23-58-262
2251 128.	23-58-76
2251 129.	23-58-76
2251 142.	23-58-469
2251 143.	23-58-469
2251 152.	23-58-573
2251 153.	23-58-573
2251 220.	23-64-311
2251 221.	23-64-311
2251 222.	23-64-311
2251 223.	23-64-311
2251 269.	23-54-136
2251 270.	23-54-72
2251 293.	23-54-142
2251 300.	23-54-4
2251 302.	23-54-4
2251 304.	23-54-4
2251 312.	23-54-150
2251 320.	23-63-100
2251 321.	23-63-100
2251 325.	23-48-20
2251 328.	23-20-14
2251 329.	23-20-14
2251 344.	23-54-180
2251 345.	23-54-184
2251 358.	23-54-74
2251 360.	23-54-193
2251 372.	23-54-141
2251 398.	4-23-7
2251 404.	23-20-14
2251 405.	23-20-14
2251 433.	23-32-79
	23-48-24
2251 452.	23-63-181
2251 461.	23-54-205
2251 466.	23-54-1
2251 467.	23-54-1
2251 490.	23-20-14
2251 491.	23-20-14
2251 526.	23-32-49
2251 534.	23-48-189
2251 544.	23-48-11
2251 572.	23-40-92
2251 573.	23-40-92
2251 582.	23-40-92
2251 583.	23-40-92
2251 584.	23-40-85
2251 585.	23-40-85
2251 600.	23-58-607
2251 617.	23-58-605
2251 676.	23-32-87
	23-48-22
2251 678.	23-48-19
2251 680.	23-32-80
2251 694.	23-54-141
2251 695.	23-54-142
2251 710.	23-54-107
2251 711.	23-54-107
2251 717.	11-10-42
2251 722.	14-88-8
2251 724.	23-34-346

MyMopar.com

PART NUMBER	CODE
2251 737. . .	23-54-17
2251 738. . .	23-54-17
2251 746. .	23-54-194
2251 747. .	23-54-207
2251 772. . .	23-09-67
2251 773. . .	23-09-67
2251 790. .	23-54-111
2251 795. .	23-54-140
2251 800. .	23-34-346
2251 868. .	23-04-205
2251 905. . .	23-36-31
2251 930. . .	23-41-7
2251 939. . .	23-41-7
2251 954. . .	23-41-53
2251 955. . .	23-41-53
2251 966. . .	23-47-6
2251 967. . .	23-47-6
2251 982. . .	23-41-53
2252 001. .	23-41-106
2252 029. .	23-41-286
2252 040. .	23-14-147
2252 041. .	23-14-147
2252 044. . .	23-18-11
2252 046. . .	23-18-11
2252 048. . .	23-41-33
2252 049. . .	23-41-33
2252 050. . .	23-41-33
2252 051. . .	23-41-33
2252 111. .	23-34-279
2252 152. . .	23-09-67
2252 153. . .	23-09-67
2252 169. . .	23-54-27
2252 170. . .	23-54-29
2252 183. . .	23-32-82
2252 184. . .	23-48-93
2252 282. . .	8-55-162
	23-19-17
2252 298. . .	23-40-86
2252 299. . .	23-40-86
2252 332. . .	23-32-53
2252 333. . .	23-32-53
2252 370. . .	23-36-53
2252 371. . .	23-36-53
2252 607. . .	23-15-13
2252 608. . .	23-63-58
2252 609. . .	23-63-58
2253 024. .	23-58-208
2253 025. .	23-58-208
2253 840. .	23-34-120
2253 841. .	23-34-120
2253 842. .	23-34-120
2253 843. .	23-34-120
2253 844. .	23-34-120
2253 845. .	23-34-120
2253 954. .	23-64-299
2253 955. .	23-64-299
2253 956. .	23-34-354
2253 959. .	23-64-299
2253 964. .	23-64-299
2253 965. .	23-64-299
2253 988. . .	23-19-84
2254 226. . .	23-15-3
2254 227. . .	23-15-3
2254 229. .	23-64-308
2254 230. .	23-64-308
2254 232. .	23-64-308
2254 233. .	23-64-308
2254 242. . .	23-15-13
2254 258. . .	23-15-1
2254 259. . .	23-15-1
2254 260. .	23-64-308
2254 261. .	23-64-308
2254 264. .	23-64-308
2254 265. .	23-64-308
2254 270. . .	23-15-13
2254 271. . .	23-15-13
2254 357. . .	14-01-25
2254 428. . .	23-51-43
2254 429. . .	23-51-43
2254 552. . .	23-19-97
2254 575. . .	23-48-43
2254 618. .	23-32-112
2254 619. .	23-32-112
2254 620. .	23-32-112
	23-32-114
2254 621. .	23-32-112
	23-32-114
2254 626. . .	23-36-18
2254 661. . .	23-32-51
2254 664. . .	23-32-70
2254 665. . .	23-32-70
2254 666. . .	23-32-50
2254 667. . .	23-32-58
2254 668. .	23-04-205
2254 675. . .	23-32-65
2254 677. . .	23-32-46
2254 680. . .	23-15-3
2254 681. . .	23-15-3
2254 686. . .	23-15-30
2254 687. . .	23-15-30
2254 712. .	23-58-336
2254 714. .	23-58-335
2254 715. .	23-58-337
2254 763. . .	23-54-53
2254 766. . .	23-63-37
2254 767. . .	23-63-37
2254 785. . .	4-23-2
2254 788. . .	23-32-56
2254 799. . .	23-15-21
2254 810. . .	23-32-79
2254 866. . .	23-63-14
	23-63-15
2254 932. . .	23-42-16
2254 934. . .	23-42-16
2254 952. . .	23-63-14
	23-63-15
2254 954. . .	23-63-15
2254 955. . .	23-63-15
2254 956. . .	23-63-14
	23-63-15
2254 960. . .	23-63-14
2254 961. . .	23-63-14
2255 027. .	23-63-110
2255 067. . .	23-54-59
2255 147. . .	23-48-93
2255 206. .	23-54-103
2255 207. .	23-54-103
2255 214. .	23-64-281
2255 215. .	23-64-281
2255 228. . .	23-64-12
2255 231. . .	23-08-12
	23-32-51
2255 339. . .	23-64-12
2255 345. . .	23-64-12
2255 354. .	23-40-170
2255 355. .	23-40-170
2255 384. . .	23-19-82
2255 385. . .	23-19-82
2255 400. . .	23-48-99
2255 401. . .	23-48-99
2255 414. . .	23-09-75
2255 415. . .	23-09-75
2255 452. . .	23-51-5
2255 453. . .	23-51-5
2255 458. . .	23-34-27
2255 459. . .	23-34-27
2255 462. .	23-34-233
2255 463. .	23-34-233
2255 464. .	23-34-233
2255 465. .	23-34-233
2255 466. . .	23-36-53
2255 467. . .	23-36-53
2255 495. .	23-34-167
2255 527. . .	23-19-84
2255 542. . .	23-09-35
2255 543. . .	23-09-35
2255 583. . .	14-01-25
2255 617. . .	23-48-19
2255 634. . .	23-63-61
2255 635. . .	23-63-61
2255 670. .	13-66-106
2255 674. . .	23-51-5
2255 675. . .	23-51-5
2255 676. . .	23-51-5
2255 677. . .	23-51-5
2255 682. . .	23-59-35
2255 683. . .	23-59-35
2255 696. . .	23-19-82
2255 697. . .	23-19-82
2255 726. .	23-63-100
2255 727. .	23-63-100
2255 782. . .	23-19-82
2255 783. . .	23-19-82
2255 788. .	23-34-179
2255 823. . .	23-66-77
2255 832. . .	23-66-65
2255 836. . .	23-51-5
2255 837. . .	23-51-5
2255 838. . .	23-51-5
2255 839. . .	23-51-5
2255 861. .	23-34-166
2255 862. . .	23-51-41
2255 863. . .	23-51-41
2255 864. . .	23-51-41
2255 865. . .	23-51-41
2255 876. . .	23-58-84
2255 894. .	23-58-469
2255 895. .	23-58-469
2255 946. . .	23-51-6
2255 947. . .	23-51-6
2255 954. . .	23-51-41
2255 955. . .	23-51-41
2255 956. .	23-58-476
2255 957. .	23-58-476
2255 962. .	23-58-480
2255 963. .	23-58-480
2255 966. .	23-58-469
2255 967. .	23-58-473
2255 973. .	23-64-269
2255 978. . .	23-19-82
2255 979. . .	23-19-82
2255 986. .	23-34-233
2255 987. .	23-34-233
2256 432. . .	8-53-294
2256 449. . .	8-35-85
2256 681. . .	1-48-770
2256 702. . .	14-02-70
2256 966. . .	8-05-31
	8-11-18
	8-12-17
	8-19-2
	8-31-18
	8-37-27
	8-37-132
	8-42-12
	8-50-159
	8-55-300
	14-02-39
	21-30-33
2257 169. . .	1-04-4
2257 182. . .	1-04-12
2257 299. . .	23-41-95
2257 417. . .	21-84-4
2257 429. . .	8-42-25
2257 440. . .	8-37-88
	8-39-15
	8-41-36
	8-50-156
2257 443. . .	8-16-4
	14-72-33
2257 444. . .	8-16-4
2257 452. .	24-24-150
2257 730. . .	1-87-335
2257 804. . .	1-21-27
2257 840. . .	21-84-1
2257 848. . .	24-28-32
2258 096. .	24-24-150
2258 102. . .	8-16-6
2258 118. . .	8-16-4
2258 284. . .	8-17-2
2258 361. . .	23-41-95
2258 404. . .	8-56-2
2258 413. . .	8-37-2
2258 436. . .	8-38-23
2258 455. . .	23-67-85
2258 590. . .	8-16-4
2258 591. . .	8-16-4
2258 598. . .	8-05-12
2258 651. . .	8-16-6
2258 704. . .	8-50-126
2258 745. . .	1-88-6
2258 831. . .	1-88-120
2258 862. . .	14-72-5
2258 899. . .	1-88-7
2258 912. . .	1-82-8
2259 028. . .	4-23-2
2259 118. . .	4-23-4
2259 413. .	23-19-178
2260 008. . .	5-31-11
2260 016. . .	5-31-12
2260 021. . .	6-22-4
2260 023. . .	6-27-5
2260 046. . .	5-39-11
2260 047. . .	6-22-1
2260 069. . .	5-31-11
2260 071. . .	5-28-8
2260 160. . .	22-01-42
2260 292. . .	5-05-1
2260 310. . .	13-54-4
2260 323. . .	13-10-1
2260 435. . .	13-33-68
2260 437. . .	13-36-5
2260 456. . .	12-07-1
2260 457. . .	12-07-1
2260 463. . .	13-33-61
2260 469. .	23-32-110
2260 472. .	23-32-110
2260 473. .	23-32-110
2260 548. . .	5-26-4
2260 549. . .	5-26-4
2260 570. . .	5-20-15
2260 571. . .	5-20-15
2260 572. . .	5-20-15
2260 573. . .	5-20-15
2260 654. . .	5-03-6
2260 671. . .	5-20-15
2260 678. . .	6-52-1
2260 709. . .	5-34-6
2260 710. . .	5-34-1
2260 718. . .	6-52-10
2260 719. . .	6-22-15
2260 727. . .	6-35-1
2260 728. . .	6-35-1
2260 746. . .	6-52-10
2260 782. . .	5-20-1
2260 783. . .	5-20-1
2260 787. . .	5-12-1
2260 788. . .	5-25-9

MyMopar.com

PART NUMBER	CODE
2260 789	5-03-23
2260 791	5-26-2
2260 792	5-26-2
2260 793	5-20-11
2260 794	5-20-9
2260 795	5-20-9
2260 800	4-26-1
2260 801	4-26-1
2260 812	5-03-6
2260 824	5-20-17
2260 826	5-20-1
2260 827	5-20-1
2260 830	4-26-1
2260 831	4-26-1
2260 835	5-03-23
2260 837	5-70-1
2260 838	5-71-1
2260 839	5-71-2
2260 840	5-69-1
2260 843	5-70-1
2260 844	5-71-1
2260 846	5-69-1
2260 873	5-57-2
2260 874	5-57-2
2260 886	5-03-6
2260 945	4-25-20
2264 105	9-15-1
2264 116	14-29-15
2264 140	9-67-4
2264 193	14-30-2
2264 215	24-25-15
2264 218	24-25-10
2264 219	24-25-10
2264 221	24-25-45
2264 354	9-07-5
2264 376	14-06-1
2264 449	7-06-1
2264 450	7-06-14
2264 463	7-03-1
2264 511	10-26-26
2264 512	10-26-30
2264 513	10-22-42
2264 517	7-04-5
2264 518	8-28-15
2264 523	8-28-36
2264 539	14-11-28
2264 552	14-11-1
2264 555	24-25-45
2264 580	14-39-45
2264 586	10-22-40
2264 587	10-22-15
2264 597	9-45-1
2264 658	9-39-17
2264 668	9-64-24
2264 674	9-67-4
2264 675	9-67-4
2264 678	9-64-24
2264 679	9-64-24
2264 686	14-06-10
2264 701	21-142-12
2264 706	14-25-12
2264 741	14-26-2
2264 744	21-142-12
2264 794	9-23-17
2264 865	24-25-15
2264 866	24-25-10
2264 867	24-25-10
2264 868	24-25-10
2264 872	19-54-133
2264 962	8-27-320
2265 018	9-67-4
2265 023	9-64-24
2265 027	14-06-1
2265 034	7-02-1
2265 036	7-02-16
2265 037	7-02-16
2265 068	5-20-17
2265 069	5-20-20
2265 189	4-10-28
2265 201	5-20-1
2265 203	5-20-4
2265 269	4-23-4
2265 273	4-23-28
2265 296	4-25-5
2265 300	4-08-1
2265 316	4-25-18
2265 360	4-26-1
2265 361	4-26-1
2265 362	5-64-1
2265 363	5-64-1
2265 423	13-10-1
2265 464	6-13-4
2265 517	8-33-4
2265 563	5-13-1
2265 572	5-13-9
2265 581	5-13-1
2265 613	19-01-19
2265 621	19-14-1
2265 622	19-14-24
2265 635	5-44-8
2265 641	5-39-20
2265 651	19-46-8
2265 653	19-14-21
2265 654	19-14-23
2265 656	19-14-4
2265 658	19-14-38
2265 670	19-14-1
2265 687	19-46-19
2265 688	19-46-12
2265 689	19-46-55
2265 697	19-14-68
2265 777	5-03-1
2265 781	5-03-1
2265 826	9-71-5
2265 836	9-71-5
2265 863	5-27-2
2265 875	6-50-1
2265 938	6-52-11
2265 939	6-52-12
2265 942	6-52-17
2265 949	5-27-1
2265 965	11-09-3
2265 972	11-10-3
2265 975	11-05-1
2265 977	11-05-4
2266 046	11-05-4
2266 183	19-46-12
2266 193	19-14-1
2266 196	19-14-10
2266 201	19-15-4
2266 204	19-14-1
2266 209	8-33-6
2266 232	6-13-1
2266 233	6-13-4
2266 235	6-14-1
2266 239	6-16-1
2266 270	5-20-10
2266 271	5-20-18
2266 272	5-20-20
2266 273	5-20-10
2266 390	22-03-1
2266 391	22-03-1
2266 450	13-68-6
2266 466	13-68-18
2266 525	13-66-135
2266 530	13-66-16
2266 531	13-66-16
2266 534	13-66-3
2266 535	13-66-3
2266 536	13-66-16
2266 537	13-66-16
2266 540	13-68-6
2266 542	13-66-16
2266 543	13-66-16
2266 547	13-66-135
2266 562	13-66-3
2266 566	13-66-3
2266 567	13-66-3
2266 572	13-66-16
2266 573	13-66-16
2266 574	13-66-16
2266 575	13-66-16
2266 602	13-66-3
2266 606	13-68-6
2266 608	13-66-135
2266 623	13-66-147
2266 632	6-14-1
2266 738	19-15-28
2266 777	6-35-9
2266 779	5-31-15
2266 783	6-50-10
2266 784	6-35-1
2266 818	6-50-10
2266 820	6-38-23
2266 867	5-13-1
2266 876	5-64-2
2266 877	22-04-11
2266 890	5-13-22
2266 922	16-03-19
2266 923	16-03-19
2266 942	5-100-161
2267 044	5-03-23
2267 045	5-25-9
2267 128	19-19-16
2267 129	19-19-35
2267 152	19-19-24
2267 156	19-19-70
2267 170	19-02-4
2267 173	19-19-7
2267 175	19-19-24
2267 176	19-19-28
2267 178	19-19-7
2267 192	19-15-59
2267 350	19-19-38
2267 351	19-19-38
2267 372	19-15-60
2267 454	19-15-21
2267 467	19-19-24
2267 468	19-19-28
2267 477	19-19-4
2267 478	19-15-77
2267 487	19-19-4
2267 491	19-02-55
2267 492	19-15-58
2267 525	19-01-8
2267 527	19-02-4
2267 528	19-58-15
2267 529	19-58-21
2267 530	19-58-18
2267 532	19-01-50
2267 537	19-58-14
2267 550	19-01-8
2267 551	19-02-4
2267 563	19-01-8
2267 566	19-01-8
2267 598	19-58-7
2267 601	19-58-14
2267 616	19-54-196
2267 617	19-57-3
2267 618	19-57-3
2267 620	19-57-3
2267 623	19-54-198
2267 640	19-15-21
2267 643	19-54-198
2267 644	19-58-9
2267 663	19-54-180
2267 666	19-54-180
2267 674	19-54-197
2267 679	19-58-9
2267 683	19-58-33
2267 684	19-02-4
2267 694	19-54-182
2267 696	19-58-14
2267 699	19-58-14
2267 700	19-01-8
2267 701	19-01-8
2267 702	19-01-8
2267 704	19-01-8
2267 705	19-01-8
2267 707	19-01-8
2267 708	19-01-8
2267 764	19-15-21
2268 114	9-07-5
2268 119	9-07-5
2268 122	8-36-4
2268 127	9-48-6
2268 188	14-06-10
2268 206	14-01-1
2268 216	9-64-24
2268 220	9-64-24
2268 222	7-03-1
2268 264	9-50-3
2268 282	9-48-44
2268 344	14-11-1
2268 346	14-11-39
2268 356	14-11-9
2268 367	14-13-5
2268 385	14-11-9
2268 405	9-15-1
2268 420	14-13-1
2268 442	9-07-5
2268 459	10-24-4
2268 513	10-24-38
2268 557	14-02-27
2268 598	7-14-5
2268 599	10-26-48
2268 619	9-07-5
2268 647	8-36-124
2268 651	7-14-5
2268 665	19-54-86
2268 679	14-24-5
2268 696	10-26-48
2268 698	10-27-24
2268 699	10-27-23
2268 766	19-54-91
2268 870	10-26-18
2268 873	10-26-48
2268 903	7-07-1
2268 911	7-14-4
2268 912	7-14-4
2268 921	10-07-8
2268 927	8-28-36
2268 928	8-28-15
2268 990	9-15-1
2269 024	9-41-4
2269 072	10-07-14
2269 076	9-13-5
2269 078	9-23-40
2269 104	2-08-5
2269 105	2-08-5
2269 124	2-08-7
2269 127	2-08-61
2269 129	2-03-3
2269 132	2-10-6
2269 133	2-10-7
2269 189	2-10-76
2269 214	2-10-66
2269 218	2-10-10
2269 234	2-14-14
2269 245	2-10-58

MyMopar.com

PART NUMBER	CODE
2269 250	2-14-13
2269 260	2-14-13
2269 292	2-10-72
2269 309	2-07-28
2269 356	2-05-4
2269 357	2-05-4
2269 359	19-27-50
2269 393	19-27-50
2269 398	19-27-2
2269 399	19-27-2
2269 574	2-14-3
2269 575	2-14-3
2269 576	2-14-3
2269 577	2-14-3
2269 578	2-14-3
2269 579	2-14-3
2269 618	2-14-3
2269 619	2-14-3
2269 620	2-14-3
2269 621	2-14-3
2269 622	2-14-3
2269 623	2-14-3
2269 638	19-27-5
2269 643	19-27-50
2269 659	19-27-2
2269 679	19-27-31
2269 685	19-27-31
2269 696	19-27-31
2269 786	2-07-2
2269 790	2-03-3
2269 791	2-03-3
2272 249	24-28-205
2275 015	1-76-1
2275 202	24-25-132
2275 204	24-25-93
2275 205	24-25-93
2275 207	24-25-2
2275 211	8-50-334
2275 212	8-50-334
2275 215	1-48-15 8-37-135
2275 220	8-16-3
2275 229	8-27-133
2275 242	8-15-7
2275 248	8-52-214
2275 365	9-11-1
2275 381	9-09-2
2275 382	9-09-2
2275 383	9-09-2
2275 384	9-09-2
2275 385	9-09-2
2275 386	9-09-2
2275 387	9-09-2
2275 388	9-09-2
2275 389	9-09-2
2275 390	9-09-2
2275 391	9-09-2
2275 392	9-09-2
2275 393	9-09-2
2275 394	9-09-2
2275 395	9-09-2
2275 396	9-09-2
2275 397	9-09-2
2275 398	9-09-2
2275 411	9-32-2
2275 412	9-32-2
2275 413	9-32-2
2275 414	9-32-2
2275 440	9-35-1
2275 441	9-35-1
2275 446	9-10-5
2275 450	13-72-4
2275 460	2-10-61
2275 461	2-10-61
2275 462	2-10-55
2275 463	2-10-55
2275 464	2-10-55
2275 465	2-10-55
2275 466	2-10-55
2275 467	2-10-55
2275 468	2-14-1
2275 469	2-14-1
2275 470	2-14-1
2275 496	21-118-6
2275 497	21-118-6
2275 498	21-138-2
2275 508	2-14-3
2275 509	2-14-3
2275 510	2-14-3
2275 511	2-14-3
2275 514	16-07-4
2275 516	5-39-1
2275 519	5-39-3
2275 535	5-63-1
2275 536	5-63-1
2275 539	5-63-3
2275 540	5-63-3
2275 550	8-52-137
2275 551	8-52-372
2275 553	8-52-342
2275 554	8-52-345
2275 555	8-52-121
2275 556	8-52-87
2275 557	8-52-96
2275 558	8-52-98
2275 588	14-72-1
2275 590	8-35-22
2275 848	17-23-3
2275 849	17-23-3
2275 857	17-11-3
2275 883	17-23-3
2275 893	21-01-3
2275 896	21-01-3
2275 897	9-13-5
2276 749	15-09-4
2276 804	15-09-4 23-32-51
2276 968	12-04-4
2276 969	12-04-4
2276 974	12-04-4
2276 975	12-04-4
2277 016	1-48-832
2277 023	1-48-88
2277 025	1-48-858
2277 026	1-48-855
2277 051	24-29-1
2277 052	24-29-1
2277 053	24-29-1
2277 054	24-29-1
2277 091	1-48-258
2277 123	24-01-36
2277 124	24-28-99
2277 187	24-24-67
2277 190	24-28-326
2277 193	24-01-24
2277 207	24-01-16
2277 209	24-28-8
2277 216	24-01-22
2277 217	24-28-25
2277 247	1-48-600 24-28-205
2277 249	1-48-600
2277 262	24-28-108
2277 342	1-48-328 24-28-73
2277 345	1-48-611
2277 401	24-28-86
2277 412	24-28-387
2277 418	24-28-195
2277 419	1-48-599
2277 424	1-48-145
2277 426	24-28-396
2277 430	24-28-17
2277 454	24-24-68
2277 515	1-48-358 24-28-142
2277 516	1-48-355 24-28-143
2277 517	1-48-401
2277 535	1-48-88 24-01-24
2277 565	1-48-707
2277 585	24-28-199
2277 591	1-48-375 24-28-341
2277 596	24-28-201
2277 597	1-48-46 24-28-210
2277 648	1-48-90 24-01-26
2277 669	1-48-362 24-28-326
2277 670	1-48-600 24-28-205
2277 675	1-48-707
2277 713	24-28-26
2277 735	1-47-3
2277 754	1-48-707
2277 770	1-48-707
2277 790	24-25-20
2277 792	24-26-100
2277 840	1-47-19
2277 845	1-47-17
2277 849	1-47-12
2277 860	1-47-4
2277 861	1-47-4
2277 868	24-26-100
2277 873	1-48-688
2277 884	1-48-600 24-28-205
2277 885	1-48-600
2277 886	1-48-600
2277 887	1-48-600 24-28-205
2277 888	1-48-600 24-28-205
2277 992	1-48-151
2277 993	1-48-151
2279 887	9-58-1
2279 893	6-01-3
2279 894	6-17-3
2279 897	11-02-1
2279 954	19-01-3
2279 955	19-01-3
2279 961	19-19-40
2279 985	19-57-1
2279 986	19-19-1
2279 998	19-54-55
2290 047	23-41-167
2290 048	23-41-25
2290 069	8-16-4
2290 089	1-48-770
2290 097	1-14-6
2290 102	1-82-29
2290 188	8-20-8
2290 189	8-56-34
2290 207	8-16-4
2290 263	8-55-57
2290 360	1-06-2
2290 649	1-21-24
2290 760	8-34-1
2290 761	8-34-1
2290 840	1-82-6
2290 909	1-48-801
2290 933	8-57-79
2291 091	8-31-11
2291 093	8-16-6
2291 095	1-47-7 1-48-770 24-24-5
2291 258	8-16-6
2291 259	8-16-4
2291 282	23-67-194
2291 288	8-05-16 8-53-296
2291 289	8-20-8
2291 336	1-88-1
2291 430	23-54-167
2291 436	8-33-164
2291 588	8-16-4
2291 664	1-09-1
2291 671	1-88-6
2291 672	8-15-4 8-15-52 23-54-208
2291 735	23-41-55
2291 736	23-41-55
2291 741	1-06-3
2291 751	8-19-83
2291 781	8-38-23
2291 789	8-15-22
2291 795	1-19-1
2291 832	1-88-20 1-88-120
2291 838	8-16-4
2291 841	8-15-32
2291 842	8-15-32
2291 846	8-15-13
2291 852	8-31-10
2291 853	23-67-132
2291 876	1-47-4 1-87-21
2291 877	1-48-7
2291 879	1-48-7
2291 909	23-67-25
2291 927	23-47-425
2291 974	8-37-89
2291 976	23-41-167
2291 984	23-41-171
2292 051	23-17-72
2292 054	23-20-14
2292 055	23-20-14
2292 056	23-20-14
2292 057	23-20-14
2292 183	23-02-19
2292 194	23-21-3
2292 195	23-21-3
2292 246	23-06-21
2292 247	23-06-21
2292 257	23-06-14
2292 274	23-20-65
2292 349	23-33-109
2292 379	23-20-32
2292 452	23-26-76
2292 474	1-87-7 8-53-150
2292 488	23-26-46
2292 489	23-26-46
2292 503	23-02-82
2292 588	23-63-14
2292 589	23-63-14
2292 742	23-26-23
2292 743	23-26-23
2292 744	23-26-23
2292 745	23-26-23
2292 790	23-63-20
2292 791	23-63-20
2292 871	8-05-6

MyMopar.com

PART NUMBER	CODE
2292 994	8-05-6
2292 995	8-05-23
2298 514	21-138-2
2298 533	2-08-57
2298 534	2-08-57
2298 536	2-08-57
2298 537	2-10-55
2298 649	23-15-1
2298 765	8-27-279
2298 768	8-16-3
2298 769	8-16-3
2298 770	8-16-3
2298 803	17-23-3
2298 804	17-23-3
2298 805	17-23-3
2298 807	17-23-3
2298 842	5-03-1
2298 855	8-05-14
	8-53-270
2298 876	23-67-164
2298 882	8-16-1
2298 900	17-23-3
2298 904	6-13-1
2298 907	7-42-4
2298 912	17-23-3
2298 913	11-01-1
2298 915	11-01-1
2298 917	9-48-6
2298 939	5-39-1
2298 940	16-03-1
2298 941	16-03-1
2298 967	16-20-8
2299 005	14-35-1
2299 042	14-30-8
2299 108	14-43-5
2299 110	14-43-5
2299 114	14-41-3
2299 186	14-30-4
2299 196	14-30-7
2299 217	14-41-3
2299 230	14-43-5
2299 233	14-30-4
2299 239	14-35-1
2299 242	14-35-1
2299 245	14-35-1
2299 248	14-35-1
2299 251	14-35-1
2299 254	14-35-1
2299 262	14-35-6
2299 263	14-35-1
2299 319	8-27-315
2299 433	23-14-53
2299 434	23-14-53
2299 444	23-54-73
2299 516	23-18-13
2299 517	23-18-13
2299 534	1-67-9
2299 560	23-39-5
2299 561	23-39-5
2299 564	23-39-5
2299 565	23-39-5
2299 570	23-39-34
2299 571	23-39-34
2299 572	23-39-34
2299 573	23-39-34
2299 574	1-76-1
2299 575	23-21-5
2299 599	15-11-16
2299 608	23-54-140
2299 628	23-18-26
2299 629	23-18-26
2299 634	23-18-26
2299 635	23-18-26
2299 661	23-47-66
2299 678	23-41-4
2299 679	23-41-4
2299 680	23-41-4
2299 681	23-41-4
2299 693	23-39-2
	23-39-44
	23-41-7
2299 694	23-15-3
2299 695	23-15-3
2299 698	23-15-1
2299 699	23-15-1
2299 715	23-54-92
2299 746	23-54-100
2299 755	23-39-2
	23-39-44
	23-41-7
2299 761	23-54-72
2299 809	23-39-15
2299 811	23-54-144
2299 817	23-21-14
2299 819	23-39-2
2299 820	23-39-5
2299 821	23-39-5
2299 839	23-18-11
2299 843	23-39-44
2299 844	23-39-34
2299 845	23-39-34
2299 846	1-76-3
2299 901	23-39-44
2299 971	1-67-1
2299 973	23-14-27
2299 974	23-39-34
2299 975	23-39-34
2299 984	23-54-31
2303 579	11-09-3
2400 062	4-10-15
2400 064	21-04-2
2400 065	21-04-1
2400 087	21-118-53
2400 131	21-03-1
2400 141	21-134-12
2400 142	21-134-10
2400 240	21-10-26
2400 284	21-133-65
2400 300	21-05-12
2400 301	21-05-12
2400 320	21-05-8
2400 339	21-139-147
2400 340	21-139-147
2400 389	21-136-17
2400 390	21-16-3
2400 479	21-129-11
2400 528	21-133-48
	21-136-237
2400 533	21-14-19
2400 568	21-42-28
2400 580	21-134-45
2400 627	21-04-1
2400 662	21-133-42
2400 663	21-134-38
2400 665	21-134-38
2400 667	21-134-8
2400 715	21-42-29
2400 716	21-42-23
2400 725	21-133-36
2400 737	21-04-1
2400 738	21-04-1
2400 843	21-05-35
2400 863	21-119-12
2400 885	9-46-8
2400 964	16-20-1
2400 976	16-20-1
2400 977	16-20-1
2400 978	16-20-1
2400 990	21-05-1
2401 051	19-27-33
2401 053	19-27-33
2401 063	19-27-33
2401 098	6-13-4
2401 115	6-13-4
2401 120	6-13-1
2401 126	5-100-161
2401 132	5-100-161
2401 152	5-39-24
2401 154	5-100-197
2401 155	5-113-17
2401 161	5-100-195
2401 163	5-100-91
2401 164	5-100-92
2401 166	5-100-32
2401 170	5-100-90
2401 171	5-100-91
2401 172	5-100-161
2401 209	8-33-23
2401 231	23-26-93
2401 295	19-51-18
2401 300	4-23-28
2401 301	4-25-10
2401 323	4-25-7
2401 405	5-31-11
2401 462	16-02-1
2401 501	5-13-9
2401 502	5-13-9
2401 513	5-20-10
2401 514	5-20-20
2401 550	11-05-1
2401 556	11-05-1
2401 562	11-10-3
2401 577	11-06-8
2401 653	9-71-5
2401 725	6-50-1
2401 739	6-24-1
2401 756	4-23-2
2401 759	4-23-38
2401 762	4-23-1
2401 772	4-23-46
2401 786	4-25-22
2401 793	4-23-1
2401 794	4-23-1
2401 797	4-23-1
2401 800	5-03-5
2401 801	5-03-5
2401 806	5-03-5
2401 807	5-03-5
2401 852	5-100-62
2401 853	5-100-167
2401 858	5-100-195
2401 862	5-39-18
2401 866	5-100-87
2401 885	5-100-32
	5-100-210
2401 910	6-52-12
2401 938	5-70-1
2401 957	5-26-2
2401 960	5-13-22
2402 013	10-01-21
2402 045	9-39-16
2402 090	9-13-5
2402 103	10-26-5
2402 116	9-03-4
2402 129	14-29-4
2402 182	9-67-4
2402 183	9-67-4
2402 185	9-64-24
2402 199	10-21-21
2402 210	14-25-5
2402 226	14-11-9
2402 239	24-25-10
2402 257	14-26-6
2402 284	19-54-91
2402 285	19-54-123
2402 288	9-41-4
2402 289	9-41-4
2402 290	9-41-4
2402 296	7-06-14
2402 339	14-11-4
2402 340	14-11-20
2402 352	24-25-10
2402 378	7-03-1
2402 384	14-11-9
2402 474	10-07-6
2402 525	9-43-3
2402 526	14-39-45
2402 590	14-06-1
2402 607	10-26-46
2402 627	14-14-1
2402 630	14-11-9
2402 635	14-11-20
2402 637	14-11-9
2402 639	10-09-5
2402 672	14-29-2
2402 673	14-29-7
2402 677	14-29-6
2402 678	14-29-9
2402 693	6-09-1
2402 704	14-29-2
2402 707	14-29-15
2402 719	9-41-4
2402 720	7-14-4
2402 730	7-06-1
2402 746	9-03-28
2402 795	7-45-31
2402 806	14-14-8
2402 839	10-03-4
2402 840	10-03-4
2402 841	10-03-4
2402 848	7-07-1
2402 883	14-63-1
2402 885	14-63-24
2402 905	9-16-17
2402 909	7-45-31
2402 923	7-45-31
2402 935	6-10-2
2403 187	13-54-4
2403 245	17-17-3
2403 247	3-01-34
	13-54-11
2403 248	3-01-33
2403 737	17-12-6
2403 742	13-54-4
2403 746	13-54-4
2403 768	13-54-4
2403 798	13-54-4
2403 860	13-54-15
2403 862	13-54-15
2403 867	17-19-20
2403 868	17-19-3
2403 901	17-19-20
2403 903	17-19-20
2403 906	17-19-3
2403 988	13-54-4
2404 052	3-35-14
2404 115	3-33-8
2404 119	3-02-20
2404 127	3-19-1
2404 135	3-22-28
2404 139	3-32-1
2404 143	3-02-1
2404 160	3-33-5

MyMopar.com

PART NUMBER	CODE
2404 164	5-13-9
2404 168	3-33-11
	5-13-10
2404 193	3-04-6
2404 194	3-06-5
2404 195	3-07-1
2404 196	3-06-6
2404 197	3-07-2
2404 198	3-08-1
2404 202	3-06-5
2404 203	3-06-5
2404 206	3-06-5
2404 208	3-02-1
2404 215	3-35-14
2404 216	3-35-14
2404 228	3-32-1
2404 228	3-32-1
2404 229	3-02-1
2404 233	3-32-1
2404 289	3-03-1
2404 312	3-03-1
2404 313	3-03-1
2404 332	3-03-1
2404 334	3-03-1
2404 335	3-03-1
2404 390	3-03-2
2404 414	3-04-6
2404 417	3-06-8
2404 418	3-06-5
2404 419	3-07-1
2404 420	3-08-1
2404 421	3-04-6
2404 427	3-09-3
2404 437	3-32-13
2404 442	3-32-1
2404 475	3-33-8
2404 479	16-20-1
2404 490	3-03-1
2404 492	3-03-1
2404 493	3-03-1
2404 520	13-64-3
2404 524	13-68-6
2404 525	13-68-6
2404 526	8-47-8
2404 530	13-64-4
2404 531	13-64-4
2404 532	13-64-4
2404 533	13-64-4
2404 536	13-64-149
2404 537	13-64-149
2404 584	11-09-3
2404 621	13-64-3
2404 622	13-64-3
2404 623	13-64-3
2404 624	13-64-26
2404 625	13-64-26
2404 629	8-47-8
2404 630	13-64-4
2404 631	13-64-4
2404 636	13-64-4
2404 637	13-64-4
2404 638	13-64-72
2404 639	13-64-72
2404 660	13-66-3
2404 664	13-68-6
2404 666	13-68-18
2404 670	13-66-16
2404 671	13-66-16
2404 672	13-66-16
2404 673	13-66-16
2404 676	13-66-135
2404 678	13-66-153
2404 698	8-47-8
2404 701	13-66-3
2404 702	13-66-40
2404 703	13-66-40
2404 709	13-68-18
2404 712	13-66-16
2404 714	13-66-16
2404 716	13-66-21
2404 717	13-66-16
2404 718	13-66-16
2404 725	13-66-9
2404 728	13-66-26
2404 729	13-66-33
2404 730	13-66-10
2404 731	13-66-25
2404 732	13-66-31
2404 734	13-66-31
2404 737	13-66-31
2404 741	13-64-38
2404 772	6-24-1
2404 814	4-23-3
2404 817	4-23-1
2404 818	4-23-1
2404 826	4-08-1
2404 846	4-25-6
2404 848	4-25-9
2404 849	4-25-5
2404 859	6-24-10
	21-30-428
2404 921	11-09-3
2404 923	11-09-3
2404 924	11-09-3
2404 929	11-10-3
2404 941	11-06-10
2405 041	23-32-110
2405 049	12-04-24
	13-04-21
	13-66-116
	23-32-113
2405 050	12-07-1
2405 051	12-07-1
2405 064	12-04-23
2405 077	6-19-2
2405 085	6-50-6
	6-52-15
2405 086	6-50-6
	6-52-15
2405 091	5-28-8
2405 100	5-31-15
2405 105	5-29-1
2405 106	5-27-1
2405 108	5-27-1
2405 113	6-43-1
2405 114	6-38-1
2405 124	5-31-15
2405 144	22-05-14
2405 145	22-05-14
2405 175	5-03-5
2405 179	5-03-5
2405 205	19-48-23
2405 253	8-33-6
2405 269	8-33-25
2405 270	8-33-47
2405 271	8-33-46
2405 331	11-01-1
2405 335	11-01-1
2405 436	13-66-16
2405 437	13-66-16
2405 465	4-25-27
2405 466	5-110-18
2405 496	21-30-414
2405 550	21-30-413
2405 552	21-30-413
2405 559	21-30-410
2405 567	21-30-2
2405 569	19-48-1
2405 570	19-48-1
2405 571	4-10-28
	21-30-367
2405 612	19-14-1
2405 614	19-46-3
2405 618	19-46-16
2405 631	16-02-1
2405 632	16-02-1
2405 634	16-02-1
2405 640	16-02-1
2405 644	16-02-1
2405 665	16-14-1
2405 674	16-20-1
2405 688	12-04-23
2405 689	12-04-23
2405 704	5-13-1
2405 705	5-13-1
2405 714	5-13-1
2405 715	5-13-1
2405 720	5-26-4
2405 728	5-13-1
2405 729	5-13-1
2405 752	5-13-1
2405 753	5-13-1
2405 758	22-04-2
2405 766	5-13-1
2405 776	5-13-1
2405 798	22-04-2
2405 804	5-03-1
2405 807	5-03-1
2405 814	5-03-1
2405 817	5-03-5
2405 872	9-71-5
2405 879	16-02-1
2405 880	16-02-1
2405 964	14-86-57
2406 039	7-06-14
2406 045	6-10-2
2406 052	24-25-45
2406 143	8-27-26
2406 334	14-01-30
2406 349	10-27-1
2406 350	10-27-12
2406 356	9-02-16
2406 366	10-03-7
2406 382	10-07-18
2406 387	9-02-16
	9-03-18
	9-48-9
2406 526	8-28-36
2406 572	14-67-29
2406 573	14-67-29
2406 575	9-02-16
2406 580	10-22-11
2406 625	9-03-29
2406 646	7-04-9
2406 647	7-04-8
2406 657	9-31-4
2406 662	10-07-10
2406 672	9-67-4
2406 674	9-67-4
2406 677	10-22-15
2406 688	10-24-4
2406 705	9-67-4
2406 708	9-67-4
2406 713	7-14-4
2406 714	7-14-5
2406 732	9-03-4
2406 762	14-68-8
2406 763	14-11-9
2406 766	9-31-4
2406 770	9-31-4
2406 785	9-31-4
2408 019	21-134-9
2408 041	21-16-3
2408 059	21-119-15
2408 061	21-119-19
2408 143	21-113-29
2408 144	21-118-34
2408 147	21-09-2
2408 163	21-14-15
2408 164	21-14-15
2409 002	8-33-23
2409 021	14-02-18
2409 083	13-18-5
2409 084	13-18-4
2409 089	13-01-1
2409 090	13-01-1
2409 125	11-01-1
2409 126	11-01-1
2409 127	11-01-1
2409 129	11-01-1
2409 130	11-01-1
2409 148	11-05-1
2409 155	11-08-5
2409 167	11-05-1
2409 190	4-25-14
2409 191	4-25-14
2409 192	4-23-1
2409 195	4-23-38
2409 211	5-105-1
2409 224	5-100-2
2409 301	14-86-1
2409 302	14-86-40
2409 305	14-86-40
2409 311	14-86-1
2409 340	12-04-25
2409 347	1-88-51
2409 408	21-30-428
2409 413	21-30-6
2409 419	19-48-1
2409 420	19-48-1
2409 421	19-48-1
2409 422	19-48-45
2409 423	19-48-45
2409 427	4-23-1
2409 430	4-25-1
2409 434	4-23-34
2409 438	4-25-6
2409 439	4-25-23
2409 449	4-08-3
2409 450	4-08-2
2409 462	4-25-7
2409 473	4-25-1
2409 568	19-14-10
2409 572	19-14-23
2409 675	6-16-1
2409 682	6-14-1
2409 683	6-13-1
2409 685	6-13-4
2409 688	6-14-1
2409 772	8-33-4
2409 823	4-26-17
2409 824	7-04-20
2409 855	22-01-5
2409 868	5-03-6
2409 882	5-03-5
2409 883	5-03-5
2409 977	5-39-3
	5-100-91
2413 614	23-63-33
2413 615	23-63-33
2413 636	23-63-33
2413 638	23-63-33
2413 692	23-63-33
2416 714	13-64-3
2416 719	13-64-3
2416 885	12-01-5
2416 886	12-01-5

MyMopar.com

PART NUMBER	CODE
2416 887	12-01-5
2416 888	12-01-5
2416 889	23-11-1
2416 890	23-11-1
2417 077	7-31-10
2417 152	12-04-23
2417 153	12-04-23
2417 154	12-04-23
2417 155	12-04-23
2417 163	8-34-110
2417 407	12-01-105
2417 412	7-33-1
2417 423	7-08-2
2417 427	7-08-2
2417 460	7-26-2
2417 478	15-11-46
2417 528	12-02-5
2417 529	12-02-5
2417 574	15-09-4
2417 956	12-02-5
2419 029	23-63-20
2419 038	1-87-25
2419 183	8-35-111
	23-17-2
2419 236	8-05-6
2419 271	23-17-49
2419 310	23-26-23
2419 311	23-26-47
2419 361	23-04-229
2419 516	23-26-47
2419 517	23-26-47
2419 618	23-63-14
2419 620	23-02-6
2419 621	23-02-6
2419 626	23-02-11
2419 663	23-20-14
2419 664	23-20-14
2419 665	23-20-14
2419 666	23-20-14
2419 667	23-20-14
2419 668	23-20-14
2419 781	23-04-205
2419 875	23-63-20
2419 892	23-63-14
2419 893	23-63-14
2419 894	23-63-14
2419 895	23-63-14
2421 137	8-29-129
2421 138	8-29-145
2421 142	23-47-451
2421 173	8-27-158
2421 174	8-27-158
2421 175	8-27-158
2421 208	1-76-3
	23-21-8
2421 215	23-09-58
2421 216	23-09-58
2421 268	4-25-28
2421 281	21-136-228
2421 288	10-02-62
2421 289	10-02-62
2421 298	4-25-4
2421 314	5-03-1
2421 315	5-39-1
2421 349	3-33-1
2421 352	5-01-2
2421 353	5-39-3
2421 355	5-100-2
2421 356	9-32-2
2421 360	9-32-2
2421 376	7-42-4
2421 399	6-52-1
2421 473	8-27-279
2421 474	8-52-214
2421 482	23-67-20
2421 486	8-32-2
2421 487	8-32-2
2421 493	14-72-1
2421 703	9-35-1
2421 704	9-35-1
2421 705	9-35-1
2421 739	17-11-3
2421 741	17-11-3
2421 742	17-11-3
2421 758	17-11-3
2421 761	17-11-3
2421 762	17-11-3
2421 770	19-48-7
2421 771	19-48-7
2421 772	19-48-7
2421 802	8-56-8
2421 803	8-56-8
2421 804	8-56-8
2421 806	8-56-8
2421 837	8-52-354
2421 838	8-52-142
2422 006	23-34-167
2422 032	23-34-27
2422 033	23-34-27
2422 038	23-34-27
2422 039	23-34-27
2422 044	23-34-234
2422 045	23-34-234
2422 046	23-34-234
2422 047	23-34-234
2422 058	23-34-301
2422 059	23-34-301
2422 067	23-34-166
2422 072	23-34-234
2422 073	23-34-234
2422 142	23-58-200
2422 143	23-58-555
2422 153	23-58-607
2422 173	23-58-75
2422 174	23-58-75
2422 178	23-58-486
2422 179	23-58-486
2422 192	23-58-573
2422 193	23-58-573
2422 194	23-58-573
2422 195	23-58-573
2422 196	23-58-573
2422 197	23-58-573
2422 201	23-63-172
2422 233	23-34-301
2422 234	23-34-301
2422 240	23-36-21
2422 241	23-36-21
2422 242	23-66-135
2422 246	23-66-135
2422 255	23-64-314
2422 258	23-64-314
2422 264	23-64-314
2422 265	23-64-314
2422 271	23-64-66
2422 272	23-64-67
2422 274	23-40-103
2422 287	23-34-166
2422 292	23-34-233
2422 293	23-34-233
2422 296	23-34-176
2422 297	23-34-176
2422 326	23-40-85
2422 327	23-40-85
2422 330	23-34-233
2422 331	23-34-233
2422 334	23-34-233
2422 335	23-34-233
2422 376	23-34-346
2422 377	23-34-346
2422 382	23-59-37
2422 383	23-59-37
2422 384	23-19-84
2422 390	23-19-177
2422 391	23-19-177
2422 401	23-58-570
2422 406	23-63-21
2422 407	23-63-21
2422 408	23-58-572
2422 409	23-58-572
2422 410	23-58-572
2422 411	23-58-572
2422 412	23-58-572
2422 413	23-58-572
2422 416	23-58-569
2422 422	23-09-9
2422 423	23-09-9
2422 428	23-22-145
2422 443	23-59-37
2422 458	23-26-46
2422 459	23-26-46
2422 462	23-26-46
2422 463	23-26-46
2422 471	23-63-110
2422 516	23-48-19
2422 517	23-48-19
2422 519	23-48-19
2422 528	23-51-5
2422 529	23-51-5
2422 564	23-32-112
2422 565	23-32-112
2422 568	23-32-112
2422 569	23-32-112
2422 572	23-58-476
2422 573	23-58-476
2422 612	23-34-29
2422 613	23-34-29
2422 622	23-19-82
2422 623	23-19-82
2422 656	8-56-1
2422 657	8-56-1
2422 664	8-57-10
2422 728	8-56-1
2422 729	8-56-1
2422 748	23-51-41
2422 749	23-51-41
2422 789	4-23-2
2422 840	23-34-36
2422 841	23-34-36
2422 843	8-47-68
2422 844	23-19-82
2422 845	23-19-82
2422 846	23-63-33
2422 847	23-63-33
2422 848	8-47-68
2422 866	23-51-41
2422 867	23-51-41
2423 001	23-54-50
2423 008	23-63-20
	23-63-21
2423 009	23-63-20
	23-63-21
2423 010	23-63-20
2423 011	23-63-20
2423 012	23-63-21
2423 013	23-63-21
2423 030	23-59-41
2423 031	23-59-41
2423 174	23-48-90
2423 180	23-48-65
2423 214	23-34-179
2423 317	8-57-10
2423 348	8-55-7
2423 349	8-55-7
2423 448	23-32-87
2423 449	23-32-87
2423 456	23-42-46
2423 492	23-09-67
2423 493	23-09-67
2423 533	23-63-181
2423 534	23-09-64
	23-64-272
2423 535	23-09-64
	23-64-272
2423 540	23-32-69
2423 541	23-48-90
2423 560	23-48-19
2423 561	23-48-19
2423 575	23-09-64
2423 582	23-63-21
2423 583	23-63-21
2423 586	23-63-21
2423 587	23-63-21
2423 624	23-63-58
2423 625	23-63-58
2423 642	23-34-36
2423 643	23-34-36
2423 644	23-34-36
2423 650	23-19-76
2423 652	23-19-76
2423 654	23-51-43
2423 655	23-51-43
2423 670	23-26-53
2423 686	23-64-280
2423 687	23-64-280
2423 718	23-32-48
2423 720	23-42-46
2423 728	23-58-476
2423 729	23-58-476
2423 778	23-51-41
2423 779	23-51-41
2423 780	23-59-37
2423 781	23-59-37
2423 784	23-19-188
2423 789	23-09-17
2423 810	23-36-66
2423 811	23-36-66
2423 812	23-51-19
2423 813	23-51-19
2423 825	23-48-65
2423 975	1-67-5
2423 997	23-21-30
2424 000	23-34-234
2424 001	23-34-234
2424 030	23-51-6
2424 031	23-51-6
2424 078	23-58-35
2424 079	23-58-31
2424 092	23-58-208
2424 094	23-58-208
2424 108	23-22-145
2424 109	23-22-145
2424 132	23-42-56
2424 133	23-42-56
2424 158	23-58-486
2424 159	23-58-486
2424 214	23-19-177
2424 215	23-19-177
2424 216	23-19-177
2424 217	23-19-177
2424 340	23-19-84
2424 341	23-19-84
2424 350	23-63-117
2424 392	23-66-235

MyMopar.com

PART NUMBER	CODE
2424 396.	23-19-82
2424 397.	23-19-82
2424 398.	23-19-82
2424 399.	23-19-82
2424 402.	23-22-53
2424 403.	23-22-53
2424 470.	23-58-250
2424 484.	23-63-20
2424 485.	23-63-20
2424 492.	23-58-478
2424 493.	23-58-478
2424 504.	23-40-92
2424 505.	23-40-92
2424 508.	23-64-66
2424 509.	23-64-66
2424 511.	23-64-66
2424 512.	23-40-92
2424 513.	23-40-92
2424 514.	23-40-92
2424 515.	23-40-92
2424 518.	23-40-85
2424 519.	23-40-85
2424 522.	23-40-85
2424 523.	23-40-85
2424 524.	23-34-304
2424 525.	23-34-304
2424 530.	23-59-56
2424 531.	23-59-56
2424 532.	23-59-56
2424 533.	23-59-56
2424 536.	23-64-314
2424 537.	23-64-314
2424 538.	23-64-314
2424 539.	23-64-314
2424 540.	23-63-112
2424 542.	23-63-33
2424 543.	23-63-33
2424 546.	23-34-164
2424 588.	23-58-76
2424 589.	23-58-76
2424 598.	23-58-469
2424 599.	23-58-469
2424 608.	23-58-573
2424 609.	23-58-573
2424 610.	23-58-573
2424 611.	23-58-573
2424 612.	23-58-573
2424 613.	23-58-573
2424 614.	23-58-572
2424 615.	23-58-572
2424 616.	23-58-572
2424 617.	23-58-572
2424 618.	23-58-572
2424 619.	23-58-572
2424 625.	23-63-117
2424 626.	23-63-117
2424 650.	23-64-272
2424 656.	23-64-311
2424 657.	23-64-311
2424 659.	23-58-220
2424 670.	23-63-55
2424 671.	23-63-55
2424 674.	23-63-37
2424 686.	23-36-66
2424 687.	23-36-66
2424 688.	23-34-27
2424 689.	23-34-27
2424 690.	23-34-27
2424 691.	23-34-27
2424 694.	23-34-233
2424 695.	23-34-233
2424 696.	23-34-166
2424 697.	23-51-41
2424 698.	23-51-41
2424 699.	23-51-41
2424 700.	23-64-311
2424 701.	23-64-311
2424 702.	23-64-311
2424 703.	23-64-311
2424 708.	23-09-9
2424 709.	23-09-9
2424 726.	23-41-8
2424 727.	23-41-8
2424 732.	23-58-476
2424 733.	23-58-476
2424 742.	23-51-48
2424 768.	23-58-480
2424 777.	23-58-67
2424 784.	23-63-21
2424 785.	23-63-21
2424 798.	23-58-75
2424 810.	23-40-96
2424 831.	23-58-75
2424 834.	23-22-86
2424 835.	23-22-86
2424 838.	23-22-86
2424 839.	23-22-86
2424 850.	23-26-41
2424 851.	23-26-41
2424 859.	23-58-75
2424 862.	8-50-303
2424 863.	8-50-303
2424 902.	8-50-308
2424 970.	23-09-35
2424 971.	23-09-35
2424 994.	13-66-116
2424 995.	23-58-200
2425 041.	23-19-74
2425 106.	23-19-74
2425 112.	23-34-120
2425 113.	23-34-120
2425 168.	23-34-120
2425 169.	23-34-120
2425 258.	23-51-5
2425 259.	23-51-5
2425 272.	23-32-49
2425 273.	23-32-49
2425 274.	23-32-49
2425 275.	23-32-49
2425 288.	23-32-49
2425 289.	23-32-49
2425 394.	23-04-241
2425 396.	23-36-53
2425 397.	23-36-53
2425 402.	23-51-5
2425 403.	23-51-5
2425 404.	23-51-5
2425 405.	23-51-5
2425 411.	23-54-3
2425 412.	23-54-3
2425 428.	23-51-6
2425 429.	23-51-6
2425 618.	23-34-120
2425 619.	23-34-120
2425 620.	23-34-120
2425 261.	23-34-120
2425 634.	23-11-3
2425 635.	23-11-3
2425 636.	23-19-8
2425 665.	23-34-166
2425 684.	12-01-5
2425 685.	12-01-5
2425 763.	23-66-65
2425 766.	23-11-1
2425 770.	23-11-1
2425 771.	23-11-1
2425 772.	23-11-1
2425 773.	23-11-1
2425 777.	23-11-1
2425 788.	23-34-120
2425 789.	23-34-120
2425 792.	23-34-120
2425 793.	23-34-120
2425 794.	23-34-120
2425 795.	23-34-120
2425 796.	23-11-3
2425 797.	23-11-3
2425 812.	23-34-120
2425 813.	23-34-120
2425 854.	23-36-5
2425 855.	23-36-5
2425 888.	23-36-5
2425 889.	23-36-5
2425 892.	23-36-5
2425 893.	23-36-5
2425 916.	23-64-299
2425 917.	23-64-299
2426 141.	8-11-8
	8-42-10
2426 151.	23-41-167
2426 161.	23-41-167
2426 163.	21-84-1
2426 164.	21-84-4
2426 179.	8-12-15
	8-31-5
2426 194.	8-50-191
2426 255.	23-67-25
2426 312.	8-34-180
2426 332.	21-85-22
2426 383.	1-21-24
2426 385.	1-48-12
	24-24-164
2426 386.	1-48-12
	24-24-164
2426 387.	1-48-12
	24-24-164
2426 388.	1-48-12
	24-24-164
2426 458.	8-37-155
2426 459.	8-37-155
2426 555.	1-48-867
2426 562.	1-48-10
	24-24-167
2426 563.	1-48-942
	24-24-156
2426 580.	14-02-78
2426 656.	8-05-16
	8-53-296
	14-02-4
2426 658.	14-02-3
2426 651.	1-47-8
	23-67-166
	24-24-20
	24-24-156
2426 836.	23-19-94
2426 865.	8-50-186
2426 920.	8-15-33
	8-52-346
2426 949.	24-24-10
2426 961.	23-47-420
2427 116.	8-35-111
	23-17-2
2427 119.	24-28-49
2427 124.	8-33-121
2427 181.	24-24-5
2427 184.	23-18-103
	23-41-170
2427 213.	23-41-170
2427 292.	23-18-115
	23-41-175
2427 324.	23-41-184
2427 335.	8-05-14
2427 342.	1-87-61
2427 365.	23-47-446
2427 409.	24-24-150
2427 445.	1-87-404
2427 480.	1-87-30
2427 529.	8-16-4
2427 533.	8-41-35
	14-02-63
	21-30-62
2427 545.	8-16-4
2427 553.	23-41-184
2427 570.	23-67-18
2427 571.	23-67-18
2427 573.	23-67-83
2427 575.	23-67-76
2427 576.	23-67-76
2427 584.	23-67-79
2427 585.	23-67-79
2427 589.	1-87-2
2427 592.	1-87-2
2427 603.	1-87-2
2427 604.	1-87-2
2427 611.	1-87-404
2427 632.	1-87-2
2427 659.	1-04-7
2427 671.	23-67-25
2427 719.	24-24-124
2427 725.	8-16-4
2427 726.	23-18-114
2427 730.	23-41-184
2427 731.	23-41-184
2427 736.	8-16-4
2427 787.	8-37-188
2427 790.	23-41-184
2427 807.	8-01-17
2427 817.	24-28-366
2427 848.	8-16-4
2427 849.	23-67-5
2427 850.	23-67-25
2427 867.	24-24-67
2427 880.	23-41-184
2427 881.	23-41-184
2427 917.	23-67-202
2427 923.	23-67-76
2427 947.	23-18-107
2427 948.	23-18-107
2427 980.	1-47-8
	1-87-180
	24-24-20
2427 987.	8-15-53
2428 014.	23-39-5
2428 015.	23-39-5
2428 016.	23-39-5
2428 017.	23-39-5
2428 046.	1-67-6
2428 052.	23-18-13
2428 053.	23-18-13
2428 071.	23-54-77
2428 075.	23-54-127
2428 086.	23-18-35
2428 087.	23-18-35
2428 094.	23-47-6
2428 096.	23-47-6
2428 100.	23-47-6
2428 101.	23-47-6
2428 125.	15-11-38
2428 132.	23-54-72
2428 142.	15-11-34
2428 148.	15-19-46
2428 149.	15-19-46

MyMopar.com

PART NUMBER	CODE
2428 163.	23-18-35
2428 175.	23-17-10
2428 178.	23-18-49
2428 179.	23-15-32
2428 191.	23-08-12
2428 208.	23-39-34
2428 209.	23-39-34
2428 210.	23-18-11
2428 211.	23-18-11
2428 212.	23-18-11
2428 221.	23-54-18
2428 225.	23-41-53
2428 230.	23-41-4
2428 231.	23-41-4
2428 234.	23-54-73
2428 235.	23-21-14
2428 245.	23-17-5
2428 246.	23-21-5
2428 275.	23-19-105
2428 282.	23-64-75
2428 283.	23-64-75
2428 284.	23-64-82
2428 286.	23-64-79
2428 287.	23-64-79
2428 290.	23-64-76
2428 291.	23-64-76
2428 318.	23-18-13
2428 319.	23-18-13
2428 362.	23-47-15
2428 372.	23-47-430
2428 377.	23-47-432
2428 388.	23-47-75
2428 389.	15-19-8
2428 400.	15-11-3
2428 418.	15-19-2
2428 419.	15-19-2
2428 448.	23-14-10
2428 449.	23-14-10
2428 450.	23-14-10
2428 451.	23-14-10
2428 458.	23-14-147
2428 459.	23-47-433
2428 470.	23-39-34
2428 471.	23-39-34
2428 488.	23-18-20
2428 492.	23-18-20
2428 496.	23-18-26
2428 497.	23-18-26
2428 498.	23-18-26
2428 499.	23-18-26
2440 006.	23-26-85
2440 007.	23-26-85
2440 008.	23-26-85
2440 009.	23-26-85
2440 017.	23-17-4
2440 019.	23-17-5
2440 064.	23-26-47
2440 065.	23-26-47
2440 177.	23-18-54
2440 212.	23-47-456
2440 270.	23-02-62
	23-02-78
2440 355.	8-11-5
2440 792.	23-26-23
2440 793.	23-26-23
2440 794.	23-26-2
2440 795.	23-26-2
2440 796.	23-26-2
2440 797.	23-26-2
2440 873.	8-05-11
2440 969.	1-87-334
2440 971.	1-87-32
2444 024.	8-36-83
2444 025.	8-36-83
2444 031.	8-36-83
2444 101.	8-27-308
2444 249.	8-27-205
2444 282.	8-27-205
2444 328.	8-27-1
2444 329.	8-27-1
2444 360.	8-27-1
2444 367.	8-27-1
2444 368.	8-27-1
2444 398.	8-27-308
2444 404.	8-27-250
2444 442.	8-52-328
2444 453.	8-52-328
2444 456.	8-27-308
2444 457.	8-27-250
2444 469.	8-36-49
2444 507.	8-27-71
2444 516.	8-52-328
2444 517.	8-52-328
2444 587.	8-36-49
2444 639.	8-35-49
2444 641.	8-35-22
2444 649.	8-27-250
2444 658.	8-52-41
2444 661.	8-52-41
2444 677.	8-27-308
2444 690.	8-27-71
2444 699.	8-27-1
2444 700.	8-27-1
2444 703.	8-27-1
2444 704.	8-27-1
2444 851.	8-27-1
2444 858.	8-27-1
2444 859.	8-27-1
2444 861.	8-35-4
2444 869.	8-27-1
2444 870.	8-36-114
2444 873.	8-27-1
2444 911.	8-27-308
2444 987.	8-27-1
2445 021.	7-31-12
2445 052.	12-02-5
2445 218.	7-16-11
2445 219.	7-16-11
2445 220.	7-16-11
2445 221.	7-16-11
2445 222.	7-16-11
2445 224.	7-16-11
2445 225.	7-16-11
2445 226.	7-16-11
2445 234.	8-34-40
2445 235.	8-34-40
2445 240.	8-34-40
2445 241.	8-34-40
2445 242.	8-34-40
2445 243.	8-34-40
2445 244.	8-34-40
2445 245.	8-34-40
2445 246.	7-16-11
2445 248.	8-34-40
2445 249.	8-34-40
2445 252.	8-34-363
2445 253.	8-34-363
2445 264.	15-11-46
2445 265.	7-26-15
2445 289.	15-11-46
2445 300.	7-31-10
2445 304.	7-35-2
2445 404.	8-34-40
2445 405.	8-34-40
2445 416.	8-34-363
2445 417.	8-34-363
2445 420.	8-34-40
2445 421.	8-34-40
2445 425.	7-33-4
2445 427.	15-11-46
2445 436.	7-35-4
2445 437.	7-35-4
2445 480.	7-16-63
2445 482.	7-33-1
2445 532.	12-04-23
2445 533.	12-04-23
2445 539.	15-11-46
2445 542.	7-16-63
2445 568.	12-04-23
2445 569.	12-04-23
2445 590.	12-02-6
2445 591.	12-02-6
2445 702.	15-11-58
2445 705.	7-26-24
2445 726.	15-11-50
2445 750.	7-35-2
2445 760.	8-34-40
2445 761.	8-34-40
2445 766.	7-16-63
2445 768.	7-16-22
2445 784.	7-26-15
2445 824.	12-02-10
2445 825.	12-02-10
2445 826.	12-02-10
2445 827.	12-02-10
2445 830.	7-26-15
2445 832.	7-26-15
2445 836.	8-34-38
2445 859.	7-16-22
	15-11-7
2445 870.	8-55-158
2445 871.	8-55-158
2445 946.	8-34-40
2445 947.	8-34-63
2445 975.	8-55-214
2445 976.	8-55-195
2445 982.	8-55-8
2445 983.	8-55-140
2445 998.	8-50-338
2446 018.	23-45-30
2446 066.	23-45-195
2446 629.	23-45-52
2446 630.	23-45-190
2446 633.	23-45-190
2446 634.	23-45-192
2446 636.	23-45-197
2448 097.	19-54-228
2448 099.	2-08-59
2448 259.	8-27-279
2448 263.	23-67-164
2448 264.	23-67-10
2448 265.	23-67-16
2448 266.	23-67-164
2448 267.	23-67-10
2448 273.	8-27-61
2448 282.	23-67-10
2448 283.	23-67-164
2448 284.	23-67-164
2448 295.	21-84-4
2448 309.	19-01-4
2448 310.	19-01-4
2448 311.	19-01-4
2448 315.	7-42-1
2448 321.	5-03-1
2448 326.	7-42-1
2448 327.	7-42-4
2448 329.	7-42-4
2448 336.	6-13-1
2448 350.	17-12-4
2448 351.	17-12-4
2448 371.	10-26-14
2448 379.	9-09-2
2448 380.	9-09-2
2448 381.	9-09-2
2448 399.	17-11-3
2448 606.	23-67-16
2448 607.	23-67-164
2448 608.	23-67-10
2448 609.	23-67-119
2448 621.	24-28-64
2448 625.	23-47-430
2448 640.	23-54-160
2448 647.	8-50-312
2448 648.	8-50-312
2448 651.	8-50-334
2448 652.	8-50-334
2448 674.	1-48-854
2448 706.	17-12-4
2448 707.	17-12-4
2448 735.	9-35-1
2448 746.	14-26-6
2448 757.	9-48-7
2448 761.	1-48-559
2448 762.	7-14-13
2448 763.	7-14-13
2448 764.	5-100-195
	7-14-13
2448 768.	4-23-1
2448 769.	4-23-1
2448 790.	21-01-3
2448 804.	8-52-82
2448 807.	8-05-6
2448 808.	8-05-16
2448 809.	8-05-23
2448 822.	8-16-1
2448 825.	8-50-334
2448 826.	8-50-334
2448 840.	8-56-8
2448 841.	8-56-8
2448 842.	8-55-194
2448 843.	8-55-194
2448 844.	23-67-98
2448 849.	23-67-98
2448 971.	14-39-7
2448 975.	14-30-8
2448 977.	14-30-4
2448 978.	14-30-7
2448 981.	14-30-7
2448 984.	14-43-5
2448 986.	14-30-7
2448 987.	14-30-4
2448 988.	14-30-4
2448 999.	14-35-1
2449 434.	7-26-24
2449 435.	7-26-22
2449 470.	8-50-303
2449 471.	8-50-303
2449 497.	15-11-58
2449 500.	8-55-7
2449 501.	8-55-7
2449 508.	8-56-1
2449 510.	8-56-40
2449 518.	8-57-56
2449 525.	8-34-180
2449 535.	13-66-14
2449 622.	8-55-214
2449 634.	8-55-8
2449 635.	8-55-214
2449 641.	8-55-140
2449 643.	8-55-214
2449 647.	8-55-158
2449 653.	8-55-214
2449 662.	8-50-338
2449 670.	8-50-338
2449 679.	8-55-214
2449 691.	8-55-214
2449 717.	7-17-5
2449 804.	8-55-214
2449 805.	8-56-23

MyMopar.com

PART NUMBER	CODE
2449 813. . .	8-55-214
2449 821. . .	8-55-214
2449 838. . .	8-55-157
2449 839. . .	8-55-214
2449 902. . .	8-55-140
2449 903. . .	8-55-140
2449 946. . .	12-06-3
2449 954. . . .	7-08-2
2449 958. . . .	7-08-2
2449 986. . .	8-50-303
2449 987. . .	8-50-303
2449 992. . .	7-16-118
2449 993. . .	7-16-118
2458 062. . .	23-14-53
2460 047. . . .	6-38-1
2460 152. . .	13-72-3
2460 332. . . .	5-27-1
2460 334. . . .	5-27-1
2460 338. . . .	5-27-1
2460 344. . .	6-35-16
2460 533. .	21-30-100
2460 534. . .	4-10-21
	21-30-100
2460 552. . . .	4-10-1
2460 570. . .	19-46-16
2460 573. . .	19-46-55
2460 654. . . .	5-20-1
2460 655. . . .	5-20-1
2460 666. . . .	5-64-1
2460 676. . . .	5-57-2
2460 704. . .	14-86-40
2460 710. . .	14-86-50
2460 723. . .	14-86-35
2460 736. . .	14-88-21
2460 741. . . .	5-58-1
2460 757. . .	11-05-4
2460 762. . .	11-08-24
2460 770. . .	11-05-4
2460 772. . .	11-05-4
2460 774. . .	11-05-4
2460 775. . .	11-01-1
2460 780. . .	11-09-3
2460 781. . .	11-09-3
2460 782. . .	11-01-1
2460 787. . .	11-05-1
2460 789. . .	11-05-1
2460 798. . .	11-05-1
2460 823. . .	11-01-1
2460 824. . .	11-01-1
2460 833. . .	11-09-3
2460 834. . .	11-09-3
2460 837. . .	11-05-4
2460 838. . .	11-05-4
2460 845. . .	11-10-3
2460 883. . .	16-02-5
2460 886. . . .	9-71-5
2460 888. . . .	9-71-5
2460 929. . .	16-14-1
2460 972. . .	13-35-1
2460 988. . .	2-08-63
2460 998. . .	13-01-1
2460 999. . .	13-01-1
2461 023. . .	14-86-1
2461 043. . .	19-46-35
2461 044. .	19-15-111
2461 046. . .	19-46-8
2461 048. . .	19-46-22
2461 049. . .	19-14-69
2461 060. .	21-30-416
2461 061. .	21-30-418
2461 062. .	21-30-418
2461 063. .	21-30-418
2461 065. .	21-30-416
2461 066. .	21-30-418
2461 067. .	21-30-418
2461 068. .	21-30-418
2461 069. .	21-30-414
2461 103. . .	13-72-1
2461 107. . .	13-72-1
2461 110. . .	13-72-3
2461 150. . .	13-64-3
2461 152. . .	13-68-6
2461 156. . .	13-64-4
2461 157. . .	13-64-4
2461 158. . .	13-64-4
2461 159. . .	13-64-4
2461 174. . . .	8-47-8
2461 200. . .	13-64-3
2461 203. . .	13-68-6
2461 204. . .	13-68-18
2461 205. . .	13-68-20
2461 206. . .	13-64-4
2461 207. . .	13-64-4
2461 208. . .	13-64-4
2461 209. . .	13-64-4
2461 212. .	13-64-149
2461 220. . .	13-64-60
2461 225. . .	13-66-3
2461 230. . .	13-66-16
2461 231. . .	13-66-16
2461 240. . .	13-68-6
2461 241. . .	13-68-6
2461 242. . .	13-68-18
2461 243. . .	13-68-12
2461 247. . .	13-66-37
2461 250. . .	13-64-3
2461 253. . .	13-68-6
2461 254. . .	13-68-18
2461 256. . .	13-64-4
2461 257. . .	13-64-4
2461 258. . .	13-64-4
2461 259. . .	13-64-4
2461 266. . .	13-64-26
2461 267. . .	13-64-26
2461 268. . .	13-64-60
2461 277. . .	13-66-3
2461 279. . .	13-66-3
2461 280. . .	13-66-42
2461 281. . .	13-66-42
2461 282. . .	13-66-16
2461 283. . .	13-66-16
2461 290. . .	13-68-6
2461 291. . .	13-68-6
2461 292. . .	13-66-16
2461 293. . .	13-66-16
2461 296. . .	13-68-18
2461 298. .	13-66-147
2461 299. .	13-66-148
2461 300. . .	13-64-3
2461 303. . .	13-68-6
2461 304. . .	13-68-18
2461 305. . .	13-68-12
2461 306. . .	13-64-72
2461 307. . .	13-64-72
2461 310. . .	13-64-4
2461 311. . .	13-64-4
2461 352. . .	13-64-3
2461 362. . .	13-64-4
2461 363. . .	13-64-4
2461 364. . .	13-64-4
2461 365. . .	13-64-4
2461 368. . .	13-68-6
2461 369. . .	13-68-6
2461 370. . .	13-68-18
2461 377. . .	13-66-3
2461 378. . .	13-66-3
2461 379. . .	13-66-3
2461 380. . .	13-66-21
2461 388. . .	13-66-16
2461 389. . .	13-66-16
2461 391. . .	13-68-21
2461 396. .	13-66-147
2461 398. .	13-66-148
2461 399. . .	13-66-3
2461 425. . .	13-66-3
2461 428. .	13-66-152
2461 429. .	13-66-152
2461 432. .	13-66-151
2461 433. .	13-66-151
2461 440. . .	13-66-16
2461 441. . .	13-66-16
2461 442. . .	13-66-44
2461 450. . . .	8-47-8
2461 451. . . .	8-47-8
2461 457. . .	8-47-68
2461 460. . .	13-66-16
2461 461. . .	13-66-16
2461 464. . .	13-66-21
2461 465. . .	13-66-37
2461 466. . .	13-66-21
2461 467. . .	13-66-21
2461 468. . .	13-66-21
2461 469. . .	13-66-21
2461 475. . . .	6-50-1
2461 476. . .	6-52-10
2461 478. . .	6-52-10
2461 480. . . .	6-27-5
2461 481. . . .	6-24-1
2461 482. . . .	6-24-8
2461 483. . . .	6-24-7
2461 484. . .	6-22-15
2461 485. . . .	6-22-1
2461 494. . . .	6-19-2
2461 504. . .	14-02-72
2461 508. . . .	6-38-1
2461 512. . . .	5-27-1
2461 515. . . .	6-35-1
2461 517. . . .	6-50-1
2461 523. . . .	6-35-1
2461 524. . . .	6-24-1
2461 526. . .	11-02-4
2461 529. . .	11-02-13
2461 549. . .	11-06-8
2461 557. . .	11-09-3
2461 570. . .	11-09-3
2461 571. . .	11-09-3
2461 574. . .	11-10-3
2461 590. . .	11-05-1
2461 599. . .	11-09-3
2461 661. . .	17-29-6
2461 670. . .	13-10-1
2461 701. . .	5-31-15
2461 703. . . .	5-27-1
2461 705. . .	5-31-11
2461 707. . .	5-31-12
2461 708. . . .	5-28-8
2461 709. . . .	5-28-8
2461 716. . . .	5-29-1
2461 717. . . .	5-27-1
2461 719. . . .	5-27-1
2461 723. . .	5-31-11
2461 725. . . .	6-38-1
2461 726. . . .	6-38-1
2461 734. . . .	6-50-1
2461 745. . . .	6-24-1
2461 746. . . .	6-46-1
2461 748. . .	6-35-15
2461 749. . . .	6-35-1
2461 754. . .	5-31-15
2461 760. . . .	6-24-1
2461 765. . .	6-52-10
2461 766. . .	6-52-10
2461 772. . . .	5-27-1
2461 774. . . .	6-43-7
2461 778. . .	12-01-22
2461 779. . .	12-01-22
2461 782. . .	12-01-22
2461 783. . .	12-01-22
2461 790. . .	13-33-68
2461 791. . .	13-33-61
2461 794. . .	12-01-22
2461 800. . .	12-04-4
2461 801. . .	1-88-52
2461 810. . .	1-88-51
2461 811. . .	13-34-12
2461 813. . .	13-33-69
2461 822. . .	13-04-20
2461 823. . .	13-04-20
2461 825. . .	13-64-3
2461 828. . .	13-68-6
2461 832. . .	13-64-72
2461 833. . .	13-64-72
2461 836. . .	13-64-4
2461 837. . .	13-64-4
2461 856. . .	13-66-16
2461 857. . .	13-66-16
2461 876. . .	17-24-28
2461 885. . .	13-01-1
2461 889. . .	13-01-1
2461 893. . .	13-01-1
2461 928. .	21-30-365
2461 929. . . .	4-10-1
2461 934. . .	19-48-45
2461 936. . .	19-48-45
2461 938. . .	19-48-2
2461 941. . .	19-48-1
2461 942. . .	19-48-1
2461 943. . .	19-48-1
2461 944. . .	19-48-46
2461 946. .	21-30-407
2461 947. .	21-30-407
2461 949. . .	21-30-2
2461 966. . .	19-46-3
2461 996. . .	19-15-28
2462 025. . .	13-54-4
2462 040. . .	17-19-3
2462 043. . .	17-19-3
2462 058. . .	13-54-15
2462 059. . .	13-54-15
2462 103. . .	17-19-20
2462 104. . .	17-23-52
2462 176. . .	17-19-20
2462 178. . .	17-19-11
2462 184. . .	17-19-20
2462 334. . .	3-01-30
2462 337. . .	3-01-33
2462 566. . .	17-29-11
2462 570. . .	17-29-15
2462 571. . .	17-29-16
2462 572. . .	17-29-18
2462 578. . .	2-10-10
2462 581. . .	17-29-12
2462 589. . . .	2-03-3
2462 603. . .	17-29-5
2462 670. . . .	2-03-3
2462 804. . .	19-27-2
2463 010. . .	10-03-7
2463 037. . . .	9-17-5
2463 038. . .	24-25-10
2463 042. . .	9-03-18
2463 106. . . .	9-48-6
2463 114. . .	8-28-36
2463 126. . .	9-07-12
2463 127. . .	8-28-15
2463 149. . .	24-25-15

MyMopar.com

PART NUMBER	CODE
2463 159	14-39-45
2463 168	9-03-29
2463 235	6-09-1
2463 253	9-48-7
2463 256	9-45-1
2463 258	9-03-10
2463 259	9-03-10
2463 260	9-03-10
2463 264	9-48-56
2463 268	9-36-5
2463 269	9-36-5
2463 270	9-36-5
2463 276	8-36-4
2463 282	9-43-11
2463 283	9-43-11
2463 290	9-03-29
2463 321	9-43-9
2463 322	9-43-11
2463 323	9-43-11
2463 324	9-43-5
2463 332	7-06-14
2463 334	7-06-1
2463 338	9-03-5
2463 360	9-15-1
2463 365	9-03-28
2463 366	9-03-28
2463 382	10-07-6
2463 384	9-20-1
2463 385	9-08-5
2463 386	9-17-5
2463 387	10-07-6
2463 390	8-28-36
2463 395	9-02-5
2463 396	9-02-5
2463 399	9-02-5
2463 400	9-02-5
2464 403	24-25-10
2463 404	24-25-10
2463 411	6-09-1
2463 414	6-10-2
2463 444	10-03-4
2463 445	10-03-4
2463 448	10-24-4
2463 467	10-23-7
2463 476	9-03-4
2463 512	10-26-20
2463 517	10-24-4
2463 531	9-48-56
2463 541	10-22-11
2463 549	9-07-5
2463 551	9-07-5
2463 572	8-28-15
2463 573	14-39-45
2463 579	24-25-15
2463 582	9-10-5
2463 599	10-27-29
2463 606	10-23-7
2463 643	7-45-31
2463 653	23-19-76
2463 657	7-02-1
2463 662	14-29-2
2463 665	7-14-4
2463 666	7-14-4
2463 667	7-14-5
2463 675	9-01-24
2463 677	9-01-24
2463 679	9-01-24
2463 681	9-01-24
2463 683	9-01-24
2463 685	9-01-24
2463 687	9-01-24
2463 757	14-11-9
2463 759	21-142-12
2463 765	14-01-12
2463 766	14-01-1
2463 773	14-01-16
2463 789	14-26-6
2463 794	21-142-12
2463 796	14-02-6
2463 843	9-45-1
2463 857	9-03-28
2463 858	10-01-21
2463 860	10-02-66
2463 863	14-01-16
2463 866	10-01-21
2463 871	14-11-3
2463 883	14-14-20
2463 895	14-01-22
2463 900	14-29-2
2463 921	14-77-17
2463 931	14-29-2
2463 932	14-29-7
2463 939	9-67-4
2463 943	9-67-4
2463 944	9-64-24
2463 951	14-29-2
2463 952	14-29-7
2463 958	14-29-7
2463 959	14-29-9
2463 969	14-29-2
2463 980	14-29-40
2463 981	14-29-40
2463 982	14-29-40
2463 983	14-29-6
2463 984	14-29-6
2463 985	14-29-6
2463 989	10-01-21
2464 000	21-03-1
2464 001	21-29-3
2464 002	21-04-1
2464 011	21-15-2
2464 012	21-24-2
2464 013	21-25-4
2464 016	21-10-31
2464 017	21-10-16
2464 018	21-10-3
2464 023	21-12-1
2464 026	21-14-1
2464 029	21-14-19
2464 033	21-14-1
2464 035	21-16-3
2464 037	21-29-25
2464 038	21-42-11
2464 041	21-42-11
2464 045	21-34-45
2464 046	21-34-42
2464 047	21-34-47
2464 048	21-42-11
2464 051	21-39-3
2464 052	21-34-51
2464 053	21-34-53
2464 055	21-42-23
2464 056	21-42-23
2464 057	21-42-23
2464 059	21-04-2
2464 069	21-10-16
2464 073	21-11-1
2464 076	21-137-205
2464 094	21-02-1
2464 098	21-02-1
2464 169	21-16-3
2464 170	21-04-1
2464 176	21-42-23
2464 178	21-134-9
2464 257	21-134-8
2464 259	21-134-11
2464 261	21-02-1
2464 262	21-02-1
2464 315	21-129-5
2464 324	21-119-5
2464 374	21-42-23
2464 376	21-42-23
2464 378	21-42-23
2464 379	21-42-23
2464 380	21-42-23
2464 383	21-118-40
2464 384	21-136-65
2464 390	21-139-50
2464 413	21-119-3
2464 419	21-119-3
2464 438	16-20-1
2464 439	21-136-44
2464 442	21-03-1
2464 446	21-136-236
2464 461	21-137-35
2464 462	21-137-50
2464 463	21-137-56
2464 464	21-137-59
2464 481	21-137-50
2464 482	21-05-12
2464 492	21-09-30
2464 545	21-04-11
2464 550	21-03-6
2464 551	21-03-7
2464 575	21-10-16
2464 576	21-10-29
2464 577	21-10-30
2464 578	21-10-4
2464 580	21-15-2
2464 582	21-15-12
2464 586	21-10-29
2464 589	21-02-1
2464 590	21-02-1
2464 592	21-02-1
2464 593	21-04-6
2464 595	21-04-18
2464 641	21-02-1
2464 644	21-04-1
2464 658	21-15-2
2464 659	21-10-31
2464 670	21-15-33
2464 673	21-09-2
2464 674	21-14-15
2464 675	21-139-9
2464 676	21-139-12
2464 678	21-30-392
2464 689	21-137-35
2464 690	21-04-1
2464 693	21-139-4
2464 724	21-14-21
2464 743	21-25-6
2464 744	21-25-2
2464 778	21-139-190
2464 836	21-14-19
2464 839	21-14-19
2464 851	21-136-47
2464 854	21-05-1
2464 855	21-04-12
2464 864	21-136-232
2464 887	21-139-140
2464 888	21-136-235
2464 890	21-133-39
2464 892	21-133-39
2464 896	21-129-5
2464 897	21-133-7
2464 900	21-133-7
2464 902	21-134-36
2464 903	21-133-5
2464 905	21-133-15
2464 915	21-03-1
2464 990	21-03-1
2464 991	21-133-7
2464 993	21-129-5
2464 999	9-46-33
2465 019	10-26-48
2465 063	14-30-2
2465 074	24-25-10
2465 085	7-14-9
2465 089	10-07-6
2465 090	10-26-12
2465 091	10-26-12
2465 092	10-07-6
2465 156	14-29-2
2465 159	14-29-28
2465 161	9-48-155
2465 162	9-48-155
2465 163	14-29-5
2465 166	8-28-36
2465 169	7-41-4
2465 170	7-41-4
2465 195	10-24-4
2465 203	9-62-1
2465 310	14-29-2
2465 325	7-06-1
2465 326	7-06-1
2465 332	9-43-1
2465 335	9-39-5
2465 336	9-39-5
2465 337	9-39-5
2465 338	9-39-5
2465 339	9-39-6
2465 340	9-39-6
2465 341	9-39-6
2465 342	9-39-6
2465 343	9-42-1
2465 348	7-06-14
2465 378	9-64-24
2465 379	9-64-24
2465 383	9-03-28
2465 391	11-06-8
2465 394	9-03-28
2465 401	14-11-1
2465 408	14-06-10
2465 410	14-26-6
2465 413	14-26-11
2465 417	14-11-9
2465 419	14-11-9
2465 420	14-14-1
2465 425	14-26-6
2465 429	14-11-9
2465 431	14-11-9
2465 433	14-26-6
2465 437	14-11-9
2465 439	14-26-6
2465 442	14-26-11
2465 445	14-11-9
2465 471	14-14-12
2465 472	14-14-8
2465 473	14-14-41
2465 477	14-11-1
2465 480	14-11-1
2465 483	14-11-31
2465 485	14-25-11
2465 486	14-25-17
2465 491	14-01-1
2465 494	14-01-25
2465 495	14-06-1
2465 496	14-06-10
2465 498	14-11-1
2465 508	9-67-4
2465 517	5-56-2
2465 524	6-09-1
2465 526	14-39-45
2465 543	9-03-28
2465 546	14-29-2

MyMopar.com

PART NUMBER	CODE
2465 549. . .	6-10-10
2465 551. . .	9-01-24
2465 553. . .	9-01-24
2465 558. . .	8-28-36
2465 560. . .	14-65-4
	24-01-38
2465 561. . .	14-65-4
2465 603. . .	14-11-25
2465 604. . .	14-26-6
2465 607. . .	14-11-9
2465 608. . .	14-11-20
2465 616. . .	14-14-20
2465 619. . .	21-142-12
2465 623. . .	14-11-48
2465 679. . .	9-15-1
2465 691. . .	10-03-7
2465 700. . .	9-36-5
2465 701. . .	9-36-5
2465 702. . .	9-36-5
2465 717. . .	24-25-15
2465 718. . .	9-48-6
2465 721. . .	8-28-36
2465 725. . .	7-06-1
2465 727. . .	9-48-7
2465 757. . .	7-06-1
2465 764. . .	14-29-11
2465 766. . .	9-48-6
2465 771. . .	7-14-4
2465 776. . .	8-36-4
2465 777. . .	8-36-4
2465 778. . .	8-36-4
2465 801. . .	7-14-4
2465 802. . .	7-14-4
2465 803. . .	7-14-5
2465 810. . .	9-58-12
2465 831. . .	10-26-12
2465 842. . .	9-50-5
2465 845. . .	9-50-5
2465 848. . .	9-48-6
2465 850. . .	9-48-9
2465 852. . .	9-15-1
2465 861. . .	9-67-4
2465 862. . .	9-64-24
2465 867. . .	9-64-24
2465 879. . .	9-48-6
2465 883. . .	9-58-12
2465 884. . .	9-58-5
2465 885. . .	9-59-15
2465 889. . .	9-03-28
2465 894. . .	19-54-115
2465 898. . .	7-14-4
2465 921. . .	14-01-15
2465 924. . .	14-25-11
2465 925. . .	14-25-11
2465 926. . .	14-25-11
2465 928. . .	14-25-17
2465 948. . .	14-01-25
2465 949. . .	14-11-1
2465 952. . .	14-11-9

PART NUMBER	CODE
2465 980. . .	21-142-12
2465 985. . .	14-06-10
2465 986. . .	14-26-6
2465 989. . .	14-11-9
2465 990. . .	14-11-20
2466 008. . .	21-136-65
2466 009. . .	21-03-28
2466 033. . .	21-133-36
2466 041. . .	21-119-15
2466 042. . .	21-119-15
2466 045. . .	21-05-1
2466 047. . .	21-04-1
2466 048. . .	21-04-8
2466 049. . .	21-04-2
2466 067. . .	21-04-1
2466 069. . .	21-16-3
2466 085. . .	21-02-1
2466 090. . .	21-05-35
2466 111. . .	21-02-1
2466 112. . .	21-02-1
2466 113. . .	21-02-1
2466 118. . .	21-02-1
2466 119. . .	21-02-1
2466 120. . .	21-02-1
2466 122. . .	21-02-1
2466 123. . .	21-02-1
2466 125. . .	21-02-1
2466 134. . .	21-02-1
2466 135. . .	21-02-1
2466 144. . .	21-02-1
2466 145. . .	21-02-1
2466 147. . .	21-02-1
2466 148. . .	21-02-1
2466 149. . .	21-02-1
2466 151. . .	21-02-1
2466 152. . .	21-02-1
2466 160. . .	21-02-1
2466 161. . .	21-02-1
2466 163. . .	21-02-1
2466 164. . .	21-02-1
2466 166. . .	21-02-1
2466 169. . .	21-05-35
2466 170. . .	21-05-35
2466 197. . .	21-129-11
2466 207. . .	21-05-18
2466 208. . .	16-02-5
2466 209. . .	21-03-1
2466 214. . .	21-42-11
2466 215. . .	21-42-11
2466 224. . .	21-05-2
2466 226. . .	21-03-1
2466 230. . .	21-03-6
2466 278. . .	21-133-15
2466 280. . .	21-133-7
2466 281. . .	21-133-39
2466 282. . .	21-133-62
2466 283. . .	21-133-31
2466 289. . .	21-42-23
2466 290. . .	21-04-1

PART NUMBER	CODE
2466 298. . .	21-119-15
2466 302. . .	21-119-19
2466 305. . .	21-139-13
2466 323. . .	9-46-4
2466 324. . .	21-118-47
2466 338. . .	21-03-28
2466 349. . .	21-133-36
2466 369. . .	21-133-43
2466 370. . .	4-10-10
2466 371. . .	21-138-10
2466 373. . .	21-138-10
2466 384. . .	21-133-46
2466 393. . .	21-119-15
2466 403. . .	21-129-5
2466 406. . .	21-09-2
2466 411. . .	21-05-1
2466 457. . .	21-34-47
	21-34-53
2466 513. . .	21-139-4
2466 514. . .	21-139-4
2466 515. . .	21-139-4
2466 536. . .	21-133-40
2466 537. . .	21-134-5
2466 539. . .	21-134-5
2466 548. . .	21-139-47
2466 551. . .	21-04-1
2466 634. . .	21-15-13
2466 670. . .	21-119-15
2466 673. . .	21-119-19
2466 689. . .	21-133-36
2466 715. . .	9-46-8
2466 745. . .	21-03-1
2466 747. . .	21-42-23
2466 748. . .	21-42-23
2466 749. . .	21-42-23
2466 762. . .	16-20-1
2466 796. . .	21-118-47
2466 800. . .	21-133-36
2466 801. . .	21-133-7
2466 803. . .	21-133-39
2466 804. . .	21-133-62
2466 806. . .	21-133-31
2466 811. . .	21-133-43
2466 817. . .	9-46-42
2466 824. . .	21-04-11
2466 829. . .	9-46-50
2466 830. . .	21-03-7
2466 848. . .	21-03-28
2466 849. . .	21-117-1
2466 872. . .	21-03-1
2466 904. . .	4-10-16
2466 911. . .	21-136-232
2466 961. . .	21-39-3
2466 977. . .	21-118-40
2466 998. . .	21-118-40
2467 085. . .	3-03-1
2467 095. . .	5-13-7
2467 096. . .	3-33-8
2467 132. . .	3-19-1

PART NUMBER	CODE
2467 134. . .	3-03-1
	3-19-1
2467 135. . .	3-19-1
2467 138. . .	3-03-1
2467 142. . .	3-03-1
2467 166. . .	3-33-6
2467 173. . .	5-13-7
2467 256. . .	16-20-1
2467 268. . .	3-32-8
2467 325. . .	3-19-1
2467 326. . .	3-19-1
2467 327. . .	3-03-1
2467 328. . .	3-03-1
2467 329. . .	3-03-1
2467 330. . .	3-03-1
2467 345. . .	3-03-1
2467 362. . .	3-03-1
2467 414. . .	3-02-1
2467 459. . .	3-33-8
2467 500. . .	4-23-1
2467 501. . .	4-23-1
2467 502. . .	4-23-1
2467 512. . .	4-25-3
2467 513. . .	4-25-23
2467 514. . .	4-25-6
2467 515. . .	4-25-9
2467 516. . .	4-23-1
2467 519. . .	4-25-10
2467 520. . .	4-25-1
2467 530. . .	4-25-3
2467 538. . .	4-25-14
2467 539. . .	4-25-14
2467 541. . .	4-25-15
2467 560. . .	4-25-3
2467 575. . .	5-113-17
2467 576. . .	5-100-212
2467 577. . .	5-113-21
2467 578. . .	5-113-20
2467 584. . .	5-100-2
2467 596. . .	5-100-185
2467 597. . .	5-100-169
2467 600. . .	5-100-192
2467 618. . .	5-100-166
2467 619. . .	5-100-47
2467 625. . .	14-88-21
2467 634. . .	5-58-1
2467 636. . .	5-58-1
2467 638. . .	14-86-39
2467 646. . .	14-86-39
2467 649. . .	14-86-42
2467 652. . .	23-32-115
2467 653. . .	23-32-115
2467 658. . .	7-26-28
2467 662. . .	19-27-37
2467 673. . .	23-32-17
2467 728. . .	5-27-1
2467 732. . .	5-27-1
2467 739. . .	6-52-10
2467 740. . .	6-52-10

PART NUMBER	CODE
2467 741. . .	6-52-1
	6-59-1
2467 744. . .	6-52-10
2467 766. . .	5-28-9
2467 768. . .	5-28-8
	6-39-2
2467 769. . .	5-28-9
	6-39-9
2467 770. . .	5-27-2
	6-38-3
2467 771. . .	6-38-3
2467 774. . .	14-02-72
2467 776. . .	19-14-84
2467 777. . .	19-14-92
2467 778. . .	19-14-84
2467 779. . .	19-14-85
2467 780. . .	19-14-4
2467 793. . .	19-14-97
2467 797. . .	19-14-92
2467 799. . .	19-14-93
2467 800. . .	19-14-93
2467 802. . .	19-14-85
2467 803. . .	19-14-95
2467 804. . .	19-14-99
2467 805. . .	19-14-91
2467 806. . .	19-14-93
2467 807. . .	19-14-85
2467 808. . .	19-14-85
2467 811. . .	19-14-85
2467 818. . .	19-14-1
2467 820. . .	19-46-3
2467 823. . .	19-46-8
2467 830. . .	19-46-38
2467 834. . .	19-46-39
2467 835. . .	19-46-40
2467 836. . .	19-46-26
2467 838. . .	21-30-379
2467 840. . .	21-30-369
2467 850. . .	21-30-2
2467 852. . .	19-14-21
2467 855. . .	19-46-8
2467 857. . .	21-30-11
2467 859. . .	19-14-1
2467 860. . .	19-46-3
2467 863. . .	19-46-12
2467 864. . .	19-46-33
2467 865. . .	19-46-15
2467 866. . .	21-30-22
2467 867. . .	4-10-30
2467 870. . .	4-10-20
2467 892. . .	5-62-1
2467 899. . .	5-57-2
2467 911. . .	21-30-2
2467 913. . .	9-48-1
2467 914. . .	19-48-1
2467 915. . .	21-30-2
2467 921. . .	21-30-2
2467 937. . .	4-25-26

MyMopar.com

PART NUMBER	CODE
2467 946	19-48-48
2467 951	13-72-3
2467 953	13-72-3
2467 954	13-72-3
2467 955	13-72-3
2467 976	13-01-1
2467 982	23-32-108
2468 005	9-31-5
2468 006	9-31-7
2468 011	19-54-115
2468 022	9-03-29
2468 024	8-36-136
2468 053	9-50-5
2468 054	8-36-4
2468 088	9-43-10
2468 089	9-43-10
2468 091	9-43-10
2468 092	9-42-1
2468 094	9-42-1
2468 109	9-39-16
2468 124	9-43-9
2468 126	9-43-9
2468 128	9-43-14
2468 132	9-43-2
2468 135	9-10-26
2468 150	9-64-24
2468 151	9-64-24
2468 171	9-03-28
2468 173	9-43-1
2468 174	9-43-1
2468 184	9-67-4
2468 188	8-35-41
2468 192	9-03-10
2468 196	8-36-137
2468 197	6-09-11
2468 200	8-36-4
2468 202	8-36-124
2468 219	9-03-28
2468 222	6-09-1
2468 225	6-09-1
2468 240	8-28-36
2468 297	9-64-24
2468 302	7-14-4
2468 307	9-58-12
2468 336	7-14-4
2468 337	7-14-5
2468 338	8-28-36
2468 339	8-28-15
2468 341	9-67-4
2468 364	10-07-4
2468 370	6-09-1
2468 413	10-24-4
2468 418	9-48-7
2468 421	8-28-36
2468 431	6-09-1
2468 434	7-04-10
2468 448	6-09-1
2468 451	14-33-1
2468 452	14-30-2
2468 456	14-14-1
2468 477	8-28-36
2468 479	6-09-1
2468 482	6-09-1
2468 494	7-04-5
2468 495	24-25-10
2468 593	10-26-13
2468 694	24-25-10
2468 695	24-25-10
2468 721	14-01-1
2468 725	14-01-25
2468 727	14-01-1
2468 728	14-01-1
2468 732	14-11-1
2468 735	14-11-29
2468 736	14-11-29
2468 737	14-25-5
2468 738	14-39-45
2468 743	14-11-40 14-14-20
2468 744	14-11-9 14-11-18
2468 751	14-30-1
2468 752	14-30-1
2468 753	14-30-1
2468 756	14-30-1
2468 757	14-30-1
2468 758	14-30-1
2468 759	14-30-1
2468 760	14-30-1
2468 762	14-30-1
2468 765	14-30-1
2468 766	14-30-1
2468 767	14-30-1
2468 769	14-30-1
2468 774	14-30-1
2468 779	14-30-1
2468 791	14-30-1
2468 796	14-30-1
2468 804	19-54-115
2468 808	24-25-10
2468 809	24-25-15
2468 810	6-10-2
2468 814	10-23-7
2468 818	14-30-2
2468 823	8-28-36
2468 824	8-28-15
2468 849	10-23-7
2468 896	8-36-4
2468 897	8-36-4
2468 898	9-43-2
2468 981	10-24-4
2468 987	14-29-6
2480 145	8-56-61
2480 148	23-34-232
2480 149	8-15-4
2480 150	23-51-41
2480 151	23-51-41
2480 152	23-51-41
2480 156	23-66-77
2480 171	23-22-145
2480 176	23-22-145
2480 177	23-22-145
2480 182	23-58-573
2480 183	23-58-573
2480 187	23-58-569
2480 189	23-34-179
2480 196	23-58-573
2480 197	23-58-573
2480 198	23-58-572
2480 199	23-58-572
2480 230	23-19-178
2480 274	23-09-67
2480 275	23-09-67
2480 276	23-58-486
2480 277	23-58-486
2480 286	23-63-55
2480 287	23-63-55
2480 382	23-41-281
2480 387	23-19-59
2480 388	23-58-269
2480 389	23-58-269
2480 444	23-58-388
2480 445	23-58-400
2480 448	23-58-381
2480 451	23-58-399
2480 453	23-58-430
2480 536	23-58-473
2480 537	23-58-473
2480 572	23-32-49
2480 573	23-32-49
2480 574	23-32-49
2480 575	23-32-49
2480 576	23-32-48
2480 577	23-04-241
2480 632	23-34-187
2480 636	23-58-607
2480 637	23-58-607
2480 704	23-34-301
2480 705	23-34-166
2480 706	23-34-233
2480 707	23-34-233
2480 708	23-64-314
2480 720	23-58-490
2480 721	23-58-490
2480 722	23-58-490
2480 723	23-58-490
2480 729	23-34-301
2480 753	23-64-12
2480 768	23-41-8
2480 769	23-41-8
2480 816	23-58-475
2480 821	8-50-338
2480 824	23-58-220
2480 825	23-63-112
2480 832	8-55-158
2480 833	8-55-158
2480 844	8-55-136
2480 845	8-55-136
2480 868	23-64-311
2480 869	23-64-311
2480 870	23-64-311
2480 871	23-64-311
2480 884	23-19-117
2480 885	23-19-117
2480 904	23-63-16
2480 912	23-51-5
2480 913	23-51-5
2480 958	23-64-311
2480 959	23-64-311
2480 960	23-64-311
2480 961	23-64-311
2480 975	23-09-67
2481 027	23-64-314
2481 040	23-40-92
2481 041	23-40-92
2481 044	23-64-66
2481 045	23-64-66
2481 046	23-34-234
2481 047	23-34-234
2481 055	23-64-66
2481 056	23-64-66
2481 068	23-34-233
2481 069	23-34-233
2481 072	23-34-301
2481 100	23-51-5
2481 101	23-51-5
2481 102	23-51-5
2481 103	23-51-5
2481 104	23-51-5
2481 105	23-51-5
2481 106	23-51-5
2481 107	23-51-5
2481 108	23-51-5
2481 109	23-51-5
2481 110	23-51-5
2481 111	23-51-5
2481 144	23-34-166
2481 145	23-34-166
2481 146	23-34-166
2481 147	23-34-166
2481 148	23-34-166
2481 153	23-51-41
2481 156	23-34-302
2481 157	23-34-302
2481 158	23-34-302
2481 159	23-34-302
2481 164	23-34-301
2481 165	23-34-301
2481 166	23-34-301
2481 167	23-34-301
2481 168	23-34-301
2481 182	23-58-75
2481 188	23-58-75
2481 204	23-32-112
2481 205	23-32-112
2481 237	23-58-75
2481 258	23-22-75
2481 259	23-22-75
2481 330	23-54-50
2481 338	23-64-280
2481 339	23-64-280
2481 342	23-19-82
2481 343	23-19-82
2481 344	23-32-70
2481 356	23-59-56
2481 357	23-59-56
2481 381	14-88-36
2481 390	23-32-48
2481 392	17-19-20
2481 393	23-47-33
2481 394	23-47-33
2481 404	23-32-112
2481 405	23-32-112
2481 406	23-32-112
2481 407	23-32-112
2481 408	23-32-115
2481 409	23-32-115
2481 416	23-51-5
2481 417	23-51-5
2481 440	23-64-314
2481 441	23-64-314
2481 443	23-64-314
2481 444	23-64-314
2481 445	23-64-314
2481 446	23-64-314
2481 450	23-32-49
2481 451	23-32-49
2481 452	23-32-49
2481 453	23-32-49
2481 454	23-40-85
2481 455	23-40-85
2481 456	23-40-85
2481 457	23-40-85
2481 460	23-64-66
2481 461	23-64-66
2481 462	23-40-85
2481 463	23-40-85
2481 466	23-40-96
2481 467	23-40-96
2481 474	23-64-66
2481 476	23-59-56
2481 477	23-59-56
2481 478	23-40-92
2481 479	23-40-92
2481 480	23-34-234
2481 481	23-34-234
2481 484	23-64-66
2481 486	23-59-56
2481 487	23-59-56
2481 492	23-40-96
2481 493	23-40-96
2481 500	23-51-43
2481 501	23-51-43
2481 502	23-51-19
2481 503	23-51-19

MyMopar.com

PART NUMBER	CODE
2481 514	23-51-5
2481 515	23-51-5
2481 518	23-19-82
2481 519	23-19-82
2481 520	23-59-35
2481 521	23-59-35
2481 524	23-59-35
2481 525	23-59-35
2481 530	23-34-27
2481 531	23-34-27
2481 532	23-34-27
2481 533	23-34-27
2481 548	23-51-6
2481 549	23-51-6
2481 552	23-19-82
2481 553	23-19-82
2481 554	23-36-53
2481 555	23-36-53
2481 556	23-34-234
2481 557	23-34-234
2481 558	23-36-53
2481 559	23-36-53
2481 574	23-64-299
2481 575	23-64-299
2481 584	23-26-41
2481 585	23-26-41
2481 588	23-22-75
2481 589	23-22-75
2481 596	23-40-85
2481 597	23-40-85
2481 602	23-09-9
2481 603	23-09-9
2481 628	23-59-56
2481 629	23-59-56
2481 630	23-40-85
2481 631	23-40-85
2481 634	23-40-85
2481 635	23-40-85
2481 638	23-40-85
2481 639	23-40-85
2481 640	23-40-85
2481 641	23-40-85
2481 642	23-64-311
2481 643	23-64-311
2481 644	23-36-53
2481 645	23-36-53
2481 646	23-36-53
2481 647	23-36-53
2481 648	23-36-53
2481 649	23-36-53
2481 656	23-34-27
2481 657	23-34-27
2481 660	23-34-27
2481 661	23-34-27
2481 700	23-64-269
2481 718	23-58-487
2481 732	23-58-607
2481 748	23-59-37
2481 749	23-59-37
2481 811	23-32-65
2481 814	23-32-49
2481 815	23-32-49
2481 824	23-32-48
2481 834	23-32-112
2481 835	23-32-112
2481 846	23-22-145
2481 847	23-66-65
2481 848	23-22-145
2481 849	23-22-145
2481 878	23-51-12
2481 879	23-51-12
2481 928	23-59-41
2481 929	23-59-41
2481 930	23-59-41
2481 931	23-59-41
2481 932	23-59-41
2481 933	23-59-41
2481 956	23-04-241
2482 000	23-64-213
2482 001	23-64-213
2482 002	23-64-311
2482 003	23-64-311
2482 008	23-64-311
2482 009	23-64-311
2482 032	23-34-234
2482 033	23-34-234
2482 036	23-34-234
2482 037	23-34-234
2482 048	23-34-27
2482 049	23-34-27
2482 050	23-34-27
2482 051	23-34-27
2482 052	23-34-27
2482 053	23-34-27
2482 056	23-34-27
2482 057	23-34-27
2482 064	23-36-53
2482 065	23-36-53
2482 066	23-36-53
2482 067	23-36-53
2482 070	23-36-53
2482 071	23-36-53
2482 076	23-36-53
2482 077	23-36-53
2482 078	23-36-53
2482 079	23-36-53
2482 080	23-36-53
2482 081	23-36-53
2482 082	23-36-53
2482 083	23-36-53
2482 088	23-36-53
2482 089	23-36-53
2482 090	23-36-53
2482 091	23-36-53
2482 108	23-36-66
2482 109	23-36-66
2482 114	23-36-66
2482 115	23-36-66
2482 138	8-55-23
2482 139	8-55-23
2482 146	23-34-36
2482 147	23-34-36
2482 148	23-34-36
2482 149	23-34-36
2482 154	23-59-37
2482 155	23-59-37
2482 156	23-59-37
2482 157	23-59-37
2482 178	23-19-82
2482 179	23-19-82
2482 180	23-19-82
2482 181	23-19-82
2482 182	23-19-82
2482 183	23-19-82
2482 184	23-19-82
2482 185	23-19-82
2482 186	23-59-37
2482 187	23-59-37
2482 188	23-59-37
2482 189	23-59-37
2482 190	23-59-37
2482 191	23-59-37
2482 194	23-59-35
2482 195	23-59-35
2482 196	23-59-35
2482 197	23-59-35
2482 198	23-59-35
2482 199	23-59-35
2482 200	23-59-35
2482 201	23-59-35
2482 202	23-59-35
2482 203	23-59-35
2482 206	23-63-21
2482 207	23-63-21
2482 208	23-63-21
2482 209	23-63-21
2482 222	23-63-100
2482 230	23-63-100
2482 232	23-51-41
2482 257	23-34-179
2482 259	23-34-179
2482 268	23-34-179
2482 281	23-64-66
2482 282	23-40-92
2482 283	23-40-92
2482 286	23-40-92
2482 287	23-40-92
2482 292	23-40-92
2482 293	23-40-92
2482 294	23-64-66
2482 297	23-22-86
2482 298	23-64-66
2482 299	23-64-66
2482 300	23-64-314
2482 301	23-64-314
2482 302	23-22-86
2482 303	23-22-86
2482 304	23-22-86
2482 305	23-22-86
2482 308	23-22-86
2482 310	23-22-86
2482 311	23-22-86
2482 312	23-26-41
2482 313	23-26-41
2482 314	23-26-41
2482 315	23-26-41
2482 320	23-26-41
2482 321	23-26-41
2482 324	23-40-85
2482 325	23-40-85
2482 328	23-40-85
2482 329	23-40-85
2482 330	23-40-85
2482 331	23-40-85
2482 332	23-40-85
2482 333	23-40-85
2482 342	23-40-96
2482 343	23-40-96
2482 348	23-40-96
2482 349	23-40-96
2482 350	23-40-96
2482 351	23-40-96
2482 358	23-40-96
2482 359	23-40-96
2482 384	23-59-56
2482 385	23-59-56
2482 386	23-59-56
2482 387	23-59-56
2482 446	23-58-569
2482 463	23-54-150
2482 464	23-19-177
2482 465	23-19-177
2482 466	23-19-177
2482 467	23-19-177
2482 468	23-19-177
2482 469	23-19-177
2482 480	23-64-10
2482 481	23-64-10
2482 482	23-19-84
2482 496	23-42-46
2482 501	23-63-171
2482 502	23-63-181
2482 503	23-63-181
2482 508	23-48-109
2482 510	23-48-109
2482 511	23-48-109
2482 514	23-48-121
2482 542	23-34-233
2482 543	23-34-233
2482 556	23-59-35
2482 557	23-59-35
2482 558	23-34-179
2482 563	23-63-172
2482 564	23-32-49
2482 565	23-32-49
2482 577	23-63-112
2482 578	23-63-112
2482 579	23-63-112
2482 580	23-63-112
2482 582	23-63-33
2482 583	23-63-33
2482 584	23-63-33
2482 585	23-63-33
2482 588	23-63-33
2482 589	23-63-33
2482 598	23-34-27
2482 601	23-34-27
2482 624	23-36-66
2482 625	23-36-66
2482 628	23-40-85
2482 629	23-40-85
2482 648	23-34-179
2482 649	23-34-179
2482 667	13-66-106
2482 668	13-66-119
2482 669	13-66-119
2482 691	23-19-178
2482 736	23-64-198
2482 737	23-64-198
2482 738	23-64-198
2482 739	23-64-198
2482 754	23-64-4
2482 780	23-63-21
2482 781	23-63-21
2482 786	23-58-486
2482 787	23-58-486
2482 796	23-63-55
2482 797	23-63-55
2482 818	23-34-166
2482 819	23-58-208
2482 826	23-63-55
2482 827	23-63-55
2482 833	23-58-569
2482 838	23-58-569
2482 872	23-64-225
2482 873	23-64-225
2482 893	23-66-235
2482 900	23-51-5
2482 908	23-32-51
2482 910	23-58-486
2482 911	23-58-486
2482 919	23-58-220
2482 942	23-64-200
2482 943	23-64-200
2482 954	23-64-200
2482 968	23-58-569
2482 969	23-58-569
2482 972	23-59-35
2482 973	23-59-35
2483 098	1-67-3
2483 102	1-67-3
2483 196	23-63-20
2483 197	23-63-20
2483 220	23-51-43
2483 221	23-51-46
2483 230	23-59-42
2483 231	23-59-42
2483 232	8-55-23
2483 233	8-55-23
2483 236	23-34-27

MyMopar.com

PART NUMBER	CODE
2483 237.	23-34-27
2483 238.	23-34-27
2483 239.	23-34-27
2483 252.	23-51-6
2483 253.	23-51-6
2483 254.	23-34-176
2483 255.	23-34-176
2483 262.	8-50-303
2483 263.	8-50-303
2483 270.	8-50-338
2483 272.	23-34-270
2483 278.	8-55-23
2483 279.	8-55-23
2483 288.	23-40-92
2483 296.	8-57-10
2483 299.	23-40-92
2483 302.	8-56-1
2483 303.	8-56-1
2483 309.	8-56-23
2483 310.	8-56-11
2483 314.	13-66-14
2483 315.	13-66-14
2483 318.	23-63-21
2483 319.	23-63-21
2483 320.	23-63-33
2483 321.	23-63-33
2483 322.	13-66-35
2483 330.	8-50-303
2483 335.	8-50-305
2483 336.	8-50-338
2483 364.	8-56-1
2483 365.	8-56-1
2483 366.	8-55-7
2483 367.	8-55-7
2483 368.	8-55-7
2483 369.	8-55-7
2483 370.	8-55-7
2483 371.	8-55-7
2483 372.	8-55-7
2483 373.	8-55-7
2483 374.	8-55-7
2483 375.	8-55-7
2483 390.	8-55-136
2483 394.	8-55-7
2483 395.	8-55-7
2483 396.	8-55-136
2483 432.	23-58-200
2483 478.	23-58-570
2483 479.	23-58-570
2483 578.	23-58-269
2483 579.	23-58-269
2483 630.	13-66-106
2483 735.	8-57-10
2483 750.	23-51-6
2483 751.	23-51-6
2483 752.	23-51-6
2483 753.	23-51-6
2483 796.	23-58-486
2483 797.	23-58-486
2483 808.	8-50-303
2483 809.	8-50-303
2483 812.	8-57-10
2483 814.	8-50-303
2483 815.	8-50-303
2483 842.	11-10-42
2483 843.	23-32-115
2483 844.	23-59-35
2483 845.	23-59-35
2483 846.	23-59-35
2483 847.	23-59-35
2483 856.	23-59-56
2483 857.	23-59-56
2483 858.	23-51-41
2483 859.	23-51-41
2483 860.	23-26-41
2483 861.	23-26-41
2483 868.	23-36-53
2483 869.	23-36-53
2483 870.	23-36-66
2483 871.	23-36-66
2483 874.	23-04-241
2483 881.	23-04-241
2483 890.	23-59-56
2483 891.	23-59-56
2483 892.	23-59-56
2483 893.	23-59-56
2483 894.	23-59-56
2483 895.	23-59-56
2483 904.	23-04-250
2483 908.	17-19-20
2483 918.	23-34-233
2483 919.	23-34-233
2483 930.	23-64-311
2483 931.	23-64-311
2483 932.	23-64-311
2483 933.	23-64-311
2483 934.	23-63-105
2483 935.	23-63-105
2483 940.	23-64-4
2483 956.	23-59-37
2483 957.	23-59-37
2483 978.	23-34-346
2483 996.	23-40-85
2483 997.	23-40-85
2484 000.	23-32-49
2484 001.	23-32-49
2484 006.	23-63-136
2484 007.	23-63-136
2484 008.	23-63-61
2484 009.	23-63-61
2484 010.	23-63-55
2484 011.	23-63-55
2484 016.	23-54-6
2484 020.	23-63-136
2484 021.	23-63-136
2484 032.	23-63-136
2484 033.	23-63-136
2484 064.	23-32-48
2484 068.	23-48-90
2484 070.	23-26-42
2484 071.	23-26-42
2484 080.	23-48-121
2484 083.	23-48-121
2484 116.	23-58-570
2484 117.	23-58-570
2484 136.	23-22-86
2484 137.	23-22-86
2484 147.	23-32-107
2484 159.	23-58-571
2484 183.	23-58-381
2484 210.	23-64-213
2484 211.	23-64-213
2484 212.	23-64-213
2484 213.	23-64-213
2484 214.	23-64-213
2484 215.	23-64-213
2484 234.	23-51-6
2484 235.	23-51-6
2484 236.	23-64-311
2484 237.	23-64-311
2484 238.	23-64-293
2484 240.	23-64-216
2484 241.	23-64-216
2484 256.	23-59-41
2484 257.	23-59-41
2484 266.	23-34-233
2484 267.	23-34-233
2484 288.	23-09-67
2484 289.	23-09-67
2484 292.	23-51-48
2484 307.	23-19-63
2484 320.	23-51-5
2484 322.	23-51-5
2484 323.	23-51-5
2484 324.	23-51-5
2484 325.	23-51-5
2484 326.	23-34-234
2484 327.	23-34-234
2484 328.	23-34-234
2484 329.	23-34-234
2484 330.	23-34-234
2484 331.	23-34-234
2484 334.	23-64-311
2484 335.	23-64-311
2484 336.	23-64-311
2484 337	23-64-311
2484 343.	23-09-64
2484 362.	23-34-234
2484 363.	23-34-234
2484 400.	23-63-171
2484 426.	23-48-76
2484 493.	23-32-51
2484 495.	23-32-48
2484 520.	23-59-56
2484 521.	23-59-56
2484 522.	23-59-56
2484 523.	23-59-56
2484 530.	23-34-302
2484 531.	23-34-302
2484 534.	23-64-67
2484 535.	23-64-67
2484 546.	23-64-280
2484 547.	23-64-280
2484 548.	23-64-280
2484 549.	23-64-280
2484 562.	23-34-301
2484 564.	23-40-85
2484 565.	23-40-85
2484 566.	23-40-85
2484 567.	23-40-85
2484 568.	23-40-92
2484 569.	23-40-92
2484 573.	23-64-314
2484 576.	23-59-56
2484 577.	23-59-56
2484 582.	23-34-302
2484 583.	23-34-302
2484 584.	23-34-233
2484 585.	23-34-233
2484 588.	23-40-96
2484 589.	23-40-96
2484 594.	23-64-66
2484 595.	23-64-66
2484 622.	23-51-5
2484 623.	23-51-5
2484 635.	23-58-239
2484 660.	23-34-280
2484 661.	23-34-280
2484 678.	23-64-311
2484 679.	23-64-311
2484 682.	23-63-55
2484 683.	23-63-55
2484 706.	23-40-103
2484 734.	23-19-74
2484 758.	23-36-53
2484 759.	23-36-53
2484 760.	23-36-53
2484 761.	23-36-53
2484 762.	23-36-53
2484 763.	23-36-53
2484 764.	23-34-214
2484 765.	23-34-214
2484 770.	23-59-56
2484 771.	23-59-56
2484 772.	23-59-56
2484 773.	23-59-56
2484 796.	23-59-37
2484 797.	23-59-37
2484 802.	23-34-234
2484 803.	23-34-234
2484 808.	23-63-21
2484 809.	23-63-21
2484 822.	8-55-23
2484 823.	8-55-23
2484 826.	23-63-42
2484 827.	23-63-42
2484 829.	23-42-46
2484 832.	23-22-78
2484 833.	23-22-78
2484 868.	23-48-98
2484 871.	23-19-74
2484 882.	23-34-234
2484 883.	23-34-234
2484 888.	23-58-333
2484 906.	23-48-28
2484 907.	23-48-28
2484 929.	23-09-53
2484 941.	23-54-103
2484 946.	23-54-209
2484 949.	13-66-116
2484 958.	23-58-269
2484 959.	23-58-269
2484 964.	23-54-143
2484 974.	23-32-69
2484 977.	23-64-300
2484 982.	23-64-269
2484 985.	23-48-149
2484 998.	23-54-108
2485 022.	24-28-55
	24-28-93
2485 023.	24-28-55
2485 038.	24-28-209
2485 135.	1-48-94
	24-01-26
2485 167.	24-24-150
2485 209.	24-28-387
2485 215.	24-28-55
2485 218.	24-28-389
2485 225.	24-28-389
2485 241.	1-48-709
2485 259.	1-48-379
2485 262.	1-48-125
2485 266.	1-48-258
	24-29-1
2485 268.	1-48-393
2485 284.	24-28-232
2485 290.	24-28-5
2485 298.	1-48-144
2485 299.	1-48-144
2485 300.	24-28-124
2485 354.	1-48-383
2485 355.	1-48-383
2485 396.	1-48-144
	24-28-370
2485 413.	1-48-599
2485 416.	1-48-832
2485 418.	1-48-252
2485 419.	1-48-365
2485 423.	1-48-374
2485 428.	1-48-405
2485 429.	1-48-608
2485 432.	24-28-73
2485 433.	1-47-1
2485 445.	1-48-606
2485 451.	1-48-832
2485 454.	1-48-328
	24-28-73
2485 478.	1-48-126
2485 479.	1-48-599
2485 493.	24-28-73

MyMopar.com

PART NUMBER	CODE
2485 497. .	24-28-364
2485 539. .	24-28-84
2485 580. .	24-28-195
2485 586. .	24-25-232
2485 587. .	24-25-234
2485 591. .	24-28-210
2485 593. .	24-28-203
2485 603. .	24-28-93
2485 609. .	24-25-41
2485 646. .	1-48-144
	24-28-370
2485 709. .	24-28-318
2485 726. .	24-28-220
2485 735. .	24-01-18
2485 738. .	1-47-3
2485 756. .	24-28-300
2485 757. .	24-28-220
2485 767. .	24-27-5
2485 773. .	24-28-220
2485 776. .	24-26-100
2485 778. .	24-28-8
2485 779. .	24-28-8
2485 781. .	24-28-12
2485 783. .	24-28-7
2485 784. .	24-28-24
2485 804. .	1-48-599
2485 805. .	24-25-33
2485 847. .	24-25-232
2485 852. .	24-25-20
2485 914. .	24-28-18
2485 915. .	24-28-18
2485 916. .	24-28-18
2485 930. .	24-27-5
2485 946. .	1-48-151
2485 947. .	1-48-151
2485 948. .	1-48-258
2485 955. .	1-48-331
2485 962. .	1-48-707
2485 964. .	1-48-1
2485 965. .	1-48-125
2485 970. .	1-48-365
2485 987. .	1-47-3
2485 997. .	24-26-101
2486 000. .	23-18-11
2486 002. .	23-18-11
2486 003. .	23-18-11
2486 004. .	23-18-20
2486 006. .	23-18-26
2486 008. .	23-18-20
2486 012. .	23-18-11
2486 013. .	23-18-11
2486 014. .	23-18-26
2486 022. .	15-11-3
2486 025. .	23-21-14
2486 034. .	23-18-26
2486 036. .	23-18-21
2486 037. .	23-18-21
2486 040. .	23-18-29
2486 044. .	23-14-136
2486 045. .	23-14-136

PART NUMBER	CODE
2486 054. .	23-14-17
2486 055. .	23-14-17
2486 058. .	23-64-269
2486 071. .	23-54-165
2486 072. .	23-54-152
2486 077. .	15-14-7
2486 178. .	23-08-60
2486 179. .	23-08-60
2486 181. .	23-54-92
2486 190. .	15-19-8
2486 191. .	23-14-17
2486 196. .	15-19-2
2486 197. .	15-19-2
2486 198. .	23-17-5
2486 222. .	23-39-15
2486 223. .	23-39-15
2486 250. .	23-18-5
2486 251. .	23-18-5
2486 260. .	23-18-5
2486 261. .	23-18-5
2486 270. .	23-18-5
2486 271. .	23-18-5
2486 279. .	23-08-54
2486 280. .	23-08-54
2486 292. .	23-41-4
2486 296. .	23-47-431
2486 301. .	23-47-432
2486 302. .	23-47-432
2486 312. .	23-41-7
2486 327. .	23-18-29
2486 348. .	23-41-7
2486 363. .	23-21-18
2486 371. .	1-76-18
2486 463. .	15-14-1
2486 468. .	23-15-38
2486 566. .	23-21-48
2486 570. .	1-67-12
2486 574. .	23-18-26
2486 587. .	23-41-53
2486 607. .	23-21-14
2486 608. .	23-18-51
2486 614. .	23-19-102
2486 621. .	23-14-24
2486 634. .	23-18-21
2486 635. .	23-18-21
2486 637. .	23-18-26
2486 638. .	23-18-26
2486 642. .	23-18-21
2486 643. .	23-18-21
2486 656. .	23-64-12
2486 660. .	23-18-27
2486 663. .	23-10-1
2486 668. .	23-10-9
2486 669. .	23-10-18
	23-15-14
2486 676. .	23-41-4
2486 677. .	23-41-4
2486 688. .	23-41-4
2486 689. .	23-41-4

PART NUMBER	CODE
2486 693. .	23-41-4
2486 696. .	15-11-5
2486 697. .	15-13-2
2486 698. .	15-11-16
2486 699. .	15-11-11
2486 700. .	23-14-68
2486 701. .	23-14-68
2486 704. .	23-14-10
2486 705. .	23-14-10
2486 718. .	23-18-26
2486 719. .	23-18-26
2486 720. .	23-18-21
2486 721. .	23-18-21
2486 730. .	23-14-10
2486 731. .	23-14-10
2486 734. .	23-14-10
2486 735. .	23-14-10
2486 736. .	23-14-10
2486 737. .	23-14-10
2486 738. .	23-18-26
2486 739. .	23-18-26
2486 740. .	23-14-10
2486 741. .	23-14-10
2486 742. .	23-18-26
2486 743. .	23-18-26
2486 751. .	23-54-100
2486 756. .	15-19-46
2486 757. .	15-19-46
2486 762. .	23-15-1
2486 763. .	23-15-1
2486 764. .	23-15-3
2486 765. .	23-15-3
2486 766. .	23-15-1
2486 767. .	23-15-1
2486 768. .	23-15-3
2486 769. .	23-15-3
2486 772. .	23-39-5
2486 773. .	23-39-5
2486 774. .	23-39-34
2486 775. .	23-39-34
2486 776. .	23-39-5
2486 777. .	23-39-5
2486 778. .	23-39-34
2486 779. .	23-39-34
2486 780. .	23-18-11
2486 782. .	23-18-11
2486 786. .	23-18-20
2486 794. .	23-18-20
	23-54-216
2486 796. .	23-18-26
2486 797. .	23-18-26
2486 798. .	23-18-11
2486 800. .	23-54-72
2486 802. .	23-39-29
2486 803. .	23-39-29
2486 814. .	23-54-19
2486 818. .	23-54-218
2486 840. .	23-47-6
2486 841. .	23-47-6

PART NUMBER	CODE
2486 844. .	23-32-80
	23-48-20
2486 846. .	23-32-58
	23-48-19
2486 848. .	23-21-14
2486 851. .	23-39-2
	23-41-7
2486 852. .	23-39-5
2486 853. .	23-39-5
2486 860. .	23-54-73
2486 874. .	23-54-98
2486 877. .	23-47-6
2486 878. .	23-47-6
2486 879. .	23-47-6
2486 880. .	23-47-6
2486 881. .	23-47-6
2486 882. .	23-54-165
2486 883. .	23-47-6
2486 893. .	23-14-147
2486 894. .	23-14-147
2486 900. .	23-14-69
2486 901. .	23-14-69
2486 914. .	15-11-17
2486 918. .	15-11-5
2486 925. .	15-11-5
2486 928. .	15-11-5
2486 943. .	15-13-2
2486 961. .	15-13-2
2486 964. .	23-47-66
2486 965. .	23-47-66
2486 966. .	23-47-66
2486 968. .	23-47-66
2486 971. .	23-54-74
2486 982. .	23-39-45
	23-41-250
2486 988. .	15-11-5
2486 993. .	23-47-67
2486 994. .	23-47-67
2486 998. .	23-39-34
2486 999. .	23-39-34
2490 012. .	8-05-6
2490 013. .	8-05-23
2490 076. .	23-58-434
2490 092. .	23-20-14
2490 093. .	23-20-14
2490 160. .	23-14-16
2490 161. .	23-14-16
2490 162. .	23-14-26
2490 163. .	23-14-26
2490 164. .	8-11-12
2490 165. .	8-11-12
2490 387. .	23-63-14
2490 462. .	23-02-62
	23-02-78
	23-02-79
2490 468. .	1-87-23
2490 481. .	23-02-79
2490 568. .	23-40-82
2490 579. .	23-40-82
2490 591. .	23-40-82

PART NUMBER	CODE
2490 608. .	23-38-15
2490 609. .	23-26-87
2490 610. .	23-26-87
2490 615. .	23-26-87
2490 621. .	8-37-509
2490 622. .	23-38-32
2490 627. .	23-38-31
2490 628. .	23-38-27
2490 631. .	23-38-30
2490 639. .	23-38-17
2490 649. .	23-38-14
2490 750. .	23-26-85
2490 751. .	23-26-85
2490 752. .	23-26-77
2490 753. .	23-26-77
2490 754. .	23-26-77
2490 755. .	23-26-77
2490 756. .	23-26-77
2490 772. .	1-76-2
2490 803. .	1-87-25
2490 810. .	23-26-23
2490 811. .	23-26-23
2490 812. .	23-26-23
2490 813. .	23-26-23
2490 870. .	1-87-25
2490 880. .	23-20-14
2490 881. .	23-20-14
2491 004. .	23-06-21
2491 005. .	23-06-21
2491 040. .	23-64-12
2491 054. .	23-09-52
2491 055. .	23-09-52
2491 076. .	23-64-311
2491 077. .	23-64-311
2491 078. .	23-64-311
2491 079. .	23-64-311
2491 080. .	23-64-311
2491 081. .	23-64-311
2491 082. .	23-64-311
2491 083. .	23-64-311
2491 088. .	23-64-255
2491 089. .	23-64-255
2491 112. .	23-66-65
2491 113. .	23-66-65
2491 119. .	23-61-116
2491 142. .	23-15-13
2491 153. .	23-34-130
2491 168. .	23-66-135
2491 169. .	23-66-135
2491 176. .	23-15-13
2491 178. .	23-15-13
2491 192. .	23-26-58
2491 193. .	23-26-58
2491 288. .	23-15-13
2491 293. .	23-64-12
2491 294. .	23-64-71
2491 295. .	23-64-71
2491 298. .	23-63-126
2491 299. .	23-63-126
2491 300. .	23-63-126

MyMopar.com

PART NUMBER	CODE
2491 301.	23-63-126
2491 302.	23-63-15
2491 303.	23-63-15
2491 306.	23-63-15
2491 307.	23-63-15
2491 324.	23-63-127
2491 325.	23-63-127
2491 326.	23-64-48
2491 327.	23-64-48
2491 328.	23-64-48
2491 329.	23-64-48
2491 330.	23-64-48
2491 331.	23-64-48
2491 385.	23-64-242
2491 392.	23-64-242
2491 398.	23-09-51
2491 399.	23-09-51
2491 407.	23-09-47
2491 448.	23-15-13
2491 450.	23-15-13
2491 486.	23-63-15
2491 487.	23-63-15
2491 488.	23-63-15
2491 489.	23-63-15
2491 490.	23-63-15
2491 491.	23-63-15
2491 492.	23-63-94
2491 493.	23-63-94
2491 494.	23-64-308
2491 495.	23-64-308
2491 496.	23-64-308
2491 497.	28-64-308
2491 506.	23-09-58
2491 507.	23-09-58
2491 524.	23-63-105
2491 525.	23-63-105
2491 530.	23-09-51
2491 574.	23-09-56
	23-64-299
2491 575.	23-09-56
	23-64-299
2491 619.	23-06-10
2491 620.	23-33-42
2491 624.	23-33-86
2491 625.	23-06-49
2491 628.	23-02-18
2491 630.	23-34-120
2491 631.	23-34-120
2491 634.	23-34-120
2491 635.	23-34-120
2491 660.	23-64-308
2491 661.	23-64-308
2491 662.	23-64-308
2491 663.	23-64-308
2491 687.	19-31-7
2491 690.	23-19-74
2491 696.	23-63-127
2491 697.	23-63-127
2491 710.	23-34-122
2491 711.	23-34-122
2491 720.	23-09-58
2491 721.	23-09-58
2491 722.	23-63-105
2491 723.	23-63-105
2491 730.	23-34-126
2491 731.	23-34-126
2491 736.	23-36-66
2491 737.	23-36-66
2491 772.	23-66-65
2491 773.	23-66-65
2491 786.	23-06-21
2491 787.	23-06-21
2491 804.	23-19-99
2491 828.	23-22-53
2491 829.	23-22-53
2491 832.	23-26-41
2491 833.	23-26-41
2491 834.	23-26-41
2491 835.	23-26-41
2491 838.	23-64-255
2491 839.	23-64-255
2491 840.	23-64-255
2491 841.	23-64-255
2491 867.	19-14-10
2491 888.	23-64-48
2491 889.	23-64-48
2491 902.	23-22-145
2491 906.	23-64-66
2491 907.	23-64-66
2491 914.	23-64-273
2491 918.	23-63-55
2491 919.	23-63-55
2491 922.	23-63-33
2491 923.	23-63-33
2491 932.	23-63-33
2491 933.	23-63-33
2491 940.	23-63-15
2491 941.	23-63-15
2491 942.	23-63-15
2491 943.	23-63-15
2491 944.	23-63-33
2491 945.	23-63-33
2491 948.	23-63-33
2491 949.	23-63-33
2491 950.	23-63-33
2491 952.	23-63-33
2491 953.	23-63-33
2491 962.	23-63-33
2491 963.	23-63-33
2491 972.	23-63-33
2491 973.	23-63-33
2491 974.	23-63-33
2491 975.	23-63-33
2491 980.	23-63-33
2491 981.	23-63-33
2492 003.	23-31-33
2492 026.	23-64-280
2492 027.	23-64-280
2492 030.	23-63-15
2492 031.	23-63-15
2492 032.	23-22-155
2492 033.	23-22-155
2492 036.	23-22-155
2492 037.	23-22-155
2492 048.	23-64-308
2492 049.	23-64-308
2492 050.	23-64-308
2492 051.	22-64-308
2492 084.	23-63-21
2492 085.	23-63-21
2492 086.	23-06-4
2492 094.	23-64-308
2492 095.	23-64-308
2492 096.	23-66-135
2492 097.	23-66-135
2492 108.	23-36-25
2492 110.	23-22-86
2492 111.	23-22-86
2492 112.	23-22-86
2492 113.	23-22-86
2492 120.	23-63-127
2492 121.	23-63-127
2492 122.	23-63-127
2492 123.	23-63-127
2492 148.	23-22-90
2492 149.	23-22-90
2492 171.	23-06-22
2492 232.	23-22-86
2492 233.	23-22-86
2492 234.	23-36-25
2492 247.	23-06-53
2492 251.	14-11-25
2492 321.	23-33-10
2492 327.	23-33-10
2492 358.	23-63-94
	23-63-104
2492 359.	23-63-94
	23-63-104
2492 497.	23-22-145
2492 498.	23-22-145
2492 499.	23-22-145
2492 517.	23-33-65
2492 520.	23-22-145
2492 521.	23-22-145
2492 538.	23-63-33
2492 539.	23-63-33
2492 540.	23-63-33
2492 544.	23-63-33
2492 545.	23-63-33
2492 560.	23-22-145
2492 561.	23-22-145
2492 566.	23-31-52
2492 588.	23-63-55
2492 589.	23-63-55
2492 626.	23-63-58
2492 634.	23-33-109
2492 642.	15-19-47
2492 676.	23-64-12
2492 680.	23-36-20
2492 681.	23-36-20
2492 691.	23-33-86
2492 693.	19-14-35
2492 696.	23-07-169
2492 697.	23-07-169
2492 716.	23-06-15
2492 726.	23-22-145
2492 727.	23-22-145
2492 728.	23-22-145
2492 729.	23-22-145
2492 741.	23-34-117
2492 760.	23-64-308
2492 761.	23-64-308
2492 762.	23-64-308
2492 763.	23-64-308
2492 764.	23-33-20
2492 766.	23-31-119
2492 816.	23-02-40
2492 818.	23-33-109
2492 831.	23-06-22
2492 858.	23-22-145
2492 859.	23-22-145
2492 860.	23-22-145
2492 861.	23-22-145
2492 894.	23-40-85
2492 895.	23-40-85
2492 901.	23-06-10
2492 902.	23-06-21
2492 903.	23-06-21
2492 918.	23-06-53
2492 956.	15-19-47
2492 957.	15-19-47
2492 960.	23-18-37
2492 965.	23-06-21
2492 984.	23-33-12
2492 988.	23-33-12
2492 992.	23-06-17
2492 993.	23-06-17
2492 996.	23-06-10
2492 999.	23-06-15
2493 032.	23-36-66
2493 033.	23-36-66
2493 044.	23-32-115
2493 045.	23-32-115
2493 110.	23-11-3
2493 111.	23-11-3
2493 112.	23-34-120
2493 113.	23-34-120
2493 130.	23-11-1
2493 131.	23-11-1
2493 132.	23-34-120
2493 133.	23-34-120
2493 166.	23-54-3
2493 256.	23-32-115
2493 257.	23-32-115
2493 310.	23-66-65
2493 326.	23-19-8
2493 332.	23-11-1
2493 333.	23-11-1
2493 336.	23-34-120
2493 337.	23-34-120
2493 364.	23-11-3
2493 365.	23-11-3
2493 370.	23-19-8
2493 380.	23-19-8
2493 413.	23-19-8
2493 418.	23-11-3
2493 419.	23-11-3
2493 420.	23-34-120
2493 421.	23-34-120
2493 424.	23-11-3
2493 425.	23-11-3
2493 426.	23-34-120
2493 427.	23-34-120
2493 430.	23-11-1
2493 431.	23-11-1
2493 432.	23-34-120
2493 433.	23-34-120
2493 436.	23-11-3
2493 437.	23-11-3
2493 438.	23-34-120
2493 439.	23-34-120
2493 444.	23-36-5
2493 445.	23-36-5
2493 446.	23-36-5
2493 447.	23-36-5
2493 448.	23-34-234
2493 449.	23-34-234
2493 464.	23-54-3
2493 466.	23-11-1
2493 467.	23-11-1
2493 468.	23-34-120
2493 469.	23-34-120
2493 472.	23-11-1
2493 473.	23-11-1
2493 474.	23-34-120
2493 475.	23-34-120
2493 478.	23-11-1
2493 479.	23-11-1
2493 480.	23-34-120
2493 481.	23-34-120
2493 484.	23-19-8
2493 510.	23-51-5
2493 511.	23-51-5
2493 592.	23-11-3
2493 593.	23-11-3
2493 598.	23-11-1
2493 599.	23-11-1
2493 600.	23-34-120
2493 601.	23-34-120
2493 625.	7-26-2
2493 638.	23-11-1
2493 639.	23-11-1
2493 640.	23-34-120
2493 641.	23-34-120
2493 644.	23-19-8
2493 650.	23-11-3

MyMopar.com

PART NUMBER	CODE
2493 651	23-11-3
2493 662	23-48-65
2493 663	23-48-189
2493 664	23-48-189
2493 666	23-48-188
2493 676	23-19-8
2493 686	23-11-1
2493 687	23-11-1
2493 688	23-34-120
2493 689	23-34-120
2493 692	23-11-1
2493 693	23-11-1
2493 694	23-34-120
2493 695	23-34-120
2493 698	23-11-3
2493 699	23-11-3
2493 700	23-34-120
2493 701	23-34-120
2493 704	23-11-3
2493 705	23-11-3
2493 730	23-51-5
2493 731	23-51-5
2493 732	23-51-5
2493 733	23-51-5
2493 734	23-51-5
2493 735	23-51-5
2493 739	23-51-19
2493 761	13-11-5
2493 794	23-48-188
2493 800	23-48-188
2493 801	23-66-65
2493 816	23-54-3
2493 817	23-54-3
2493 818	23-54-3
2493 829	23-66-65
2493 844	23-36-53
2493 845	23-36-53
2493 878	23-32-56
2493 882	23-48-189
2493 906	12-01-5
2493 907	12-01-5
2493 924	13-11-5
2493 925	13-11-5
2493 926	12-01-5
2493 927	12-01-5
2493 938	23-32-46
2493 970	23-19-82
2493 971	23-19-82
2493 975	23-48-188
2493 976	23-19-82
2493 977	23-19-82
2494 121	23-26-45
2494 122	23-26-45
2494 142	23-26-33
2494 146	23-45-33
2494 166	23-26-45
2494 167	23-26-45
2494 509	23-45-188
2494 549	23-47-28
2495 006	5-03-1
2495 025	17-11-3
2495 027	17-12-4
2495 028	17-12-4
2495 029	17-12-4
2495 037	21-01-3
2495 039	2-07-1
2495 040	2-07-1
2495 041	2-07-1
2495 042	2-07-1
2495 052	6-17-3
2495 053	19-54-228
2495 054	19-54-55
2495 057	19-54-2
2495 060	17-11-3
2495 061	17-11-3
2495 066	5-100-166
2495 067	5-105-1
2495 069	5-100-1
2495 072	9-34-5
2495 073	9-34-5
2495 074	9-34-5
2495 075	9-34-5
2495 078	17-11-3
2495 079	17-11-3
2495 081	9-50-1
2495 086	17-11-3
2495 087	17-11-3
2495 088	17-11-3
2495 090	21-118-6
2495 091	21-01-3
2495 133	8-47-57
2495 146	23-19-82
2495 147	23-19-82
2495 148	23-19-82
2495 149	23-19-82
2495 200	23-67-98
2495 222	8-53-327
2495 223	8-16-1
2495 224	8-16-1
2495 232	8-15-3
2495 234	8-16-1 23-41-176
2495 235	8-16-1 23-41-176
2495 236	8-16-1 23-41-176
2495 237	8-16-1 23-41-176
2495 239	8-16-1 23-64-81
2495 249	23-41-34
2495 510	8-36-1
2495 513	8-36-1
2495 514	8-36-1
2495 516	8-36-1
2495 517	8-16-1
2495 526	14-73-1
2495 527	14-73-1
2495 528	14-73-1
2495 513	8-35-4
2495 537	21-113-24
2495 538	8-15-3
2495 540	1-82-25
2495 541	8-16-1
2495 542	8-16-1
2495 545	8-17-30
2495 547	23-67-119
2495 548	23-67-10
2495 549	23-67-164
2495 878	1-76-1
2495 887	1-76-27
2495 915	23-14-79
2495 951	14-30-7
2495 952	14-30-4
2495 987	14-30-4
2496 010	1-48-7
2496 012	1-48-7
2496 016	8-37-178
2496 019	8-37-136
2496 021	8-37-1
2496 022	8-37-1
2496 028	8-37-90
2496 033	23-33-48
2496 050	8-19-15
2496 058	8-37-90
2496 059	8-37-90
2496 073	8-37-178
2496 078	8-37-372
2496 079	8-37-372
2496 080	8-37-372
2496 087	8-37-199 8-37-275
2496 091	8-19-15
2496 097	24-28-302
2496 100	23-18-107
2496 109	8-11-6
2496 110	23-19-98
2496 112	23-67-201
2496 114	23-67-76
2496 120	23-67-104
2496 121	23-67-86
2496 122	23-67-86
2496 124	23-67-79
2496 125	23-67-79
2496 127	23-67-104
2496 129	23-47-451
2496 134	23-47-446
2496 135	23-47-446
2496 139	23-67-79
2496 140	23-67-79
2496 150	23-67-98
2496 154	1-82-16
2496 157	23-67-76
2496 160	8-58-60
2496 175	1-88-126
2496 192	8-50-82
2496 193	1-82-6
2496 213	8-19-15
2496 215	8-19-15
2496 222	8-37-372
2496 223	8-37-372
2496 237	8-37-275
2496 279	8-31-16 8-37-88 8-39-15 8-41-36 8-50-156
2496 291	21-84-1
2496 292	21-84-4
2496 317	8-42-2
2496 350	14-02-29
2496 352	8-15-4
2496 357	23-41-170
2496 359	23-41-170
2496 379	24-24-5
2496 389	8-37-90
2496 398	8-37-178
2496 400	8-37-275
2496 401	8-37-136
2496 402	8-37-1
2496 408	8-37-372
2496 409	8-37-372
2496 443	8-37-372
2496 444	8-37-372
2496 445	8-37-372
2496 451	8-37-275
2496 452	8-37-136
2496 453	8-37-1
2496 454	8-37-1
2496 466	23-33-20
2496 467	8-19-15
2496 468	8-19-15
2496 479	8-37-90
2496 494	8-37-372
2496 495	8-37-372
2496 501	8-37-275
2496 502	8-37-136
2496 503	8-37-1
2496 508	8-19-15
2496 510	8-37-178
2496 512	8-15-4
2496 513	8-15-4
2496 515	23-67-166
2496 517	8-35-85
2496 532	8-16-4
2496 541	8-16-4
2496 562	8-20-10
2496 564	8-20-10
2496 565	8-15-4
2496 571	23-41-174 23-47-447
2496 576	8-15-4
2496 599	8-37-90
2496 607	8-37-178
2496 611	8-19-15
2496 616	8-37-275
2496 617	8-37-136
2496 618	8-37-1
2496 619	8-37-1
2496 628	8-37-372
2496 629	8-37-372
2496 630	8-37-372
2496 645	23-33-20
2496 648	8-15-4
2496 666	1-48-12
2496 667	1-48-12
2496 668	1-48-12
2496 671	24-24-164
2496 672	24-24-164
2496 673	24-24-164
2496 674	24-24-164
2496 675	24-24-164
2496 681	8-05-16
2496 693	8-37-275
2496 695	8-37-1
2496 696	8-37-1
2496 706	8-37-372
2496 707	8-37-372
2496 708	8-37-372
2496 724	23-33-20
2496 738	23-41-55
2496 760	23-67-195
2496 761	8-35-85
2496 762	8-05-20 8-53-294
2496 766	8-05-11 8-53-312
2496 768	23-67-25
2496 788	1-47-8 23-67-166 23-67-194
2496 790	8-20-8
2496 791	8-05-16 8-53-296
2496 816	1-48-4
2496 821	1-48-940 24-24-159
2496 825	8-05-11
2496 849	8-15-4
2496 858	8-35-95
2496 861	23-67-204
2496 864	8-35-85
2496 873	1-48-770
2496 874	1-87-2
2496 880	1-48-40
2496 888	24-24-159
2496 892	24-24-174
2496 910	1-48-770
2496 912	21-30-15
2496 913	1-48-12 24-24-164
2496 914	1-48-12 24-24-164
2496 915	1-48-12 24-24-164

MyMopar.com

PART NUMBER	CODE
2496 916. . .	1-48-12
	24-24-164
2496 917. . .	1-48-12
	24-24-164
2496 918. . . .	1-48-4
2496 921. .	23-54-167
	23-58-532
2496 929. . .	8-37-90
2496 938. . .	8-19-15
2496 963. . .	8-37-275
2496 964. . .	8-37-136
2496 965. . .	8-37-316
2496 966. . . .	8-37-1
2496 979. . .	8-37-504
2496 986. . .	24-24-5
2497 002. . . .	8-15-4
2497 006. . .	1-48-770
	24-24-5
2497 008. . .	23-41-55
2497 010. . .	23-41-55
2497 028. . . .	8-15-4
2497 044. . . .	8-19-3
2497 048. . .	23-41-55
2497 055. . . .	8-15-4
2497 056. . . .	1-48-7
2497 080. . .	1-48-940
	24-24-159
2497 086. . .	1-48-70
	24-24-140
2497 105. . .	8-37-348
2497 112. .	23-67-160
2497 135. . .	8-42-29
2497 136. . .	23-67-98
2497 138. . .	8-15-53
2497 143. . .	8-35-85
2497 144. .	23-58-543
2497 158. . .	8-35-59
2497 172. .	23-54-178
	23-58-189
2497 178. .	23-58-189
2497 181. . . .	8-15-4
2497 187. . .	14-02-8
2497 198. . . .	8-15-4
2497 207. . .	8-15-52
2497 208. . .	8-15-53
2497 210. . .	14-02-2
2497 213. . .	14-02-34
2497 227. . . .	8-19-3
2497 237. . .	1-48-942
	24-24-156
2497 239. . .	1-48-940
2497 246. . . .	8-15-4
2497 249. . .	8-05-20
	8-53-294
2497 250. . . .	1-47-9
	23-54-170
	23-58-543
	23-67-195
2497 251. . .	19-15-20
	24-15-20

PART NUMBER	CODE
2497 254. .	23-54-178
2497 255. . .	24-24-5
2497 257. . .	8-15-52
2497 262. . . .	8-15-4
2497 269. . . .	1-47-8
	23-67-166
2497 271. . .	8-05-16
	8-53-296
2497 272. . .	8-05-16
	8-53-296
2497 274. . .	1-48-801
	24-24-20
2497 278. . . .	8-20-8
2497 282. . . .	1-82-2
	23-67-160
2497 292. . . .	8-19-3
2497 293. . . .	8-19-3
2497 308. . . .	8-37-1
2497 311. . .	1-87-22
2497 313. . .	8-15-52
2497 319. . . .	8-15-2
2497 320. . .	8-35-85
2497 321. . .	8-20-16
2497 323. . . .	8-15-2
2497 327. . . .	8-15-4
2497 343. . . .	8-15-4
2497 344. . . .	8-15-7
2497 346. . .	8-16-10
2497 348. . .	8-55-57
2497 350. . .	8-15-52
2497 362. . . .	8-15-4
2497 366. . .	1-87-22
2497 368. . .	8-15-52
2497 369. . . .	8-19-3
2497 370. . .	23-41-55
2497 377. .	23-67-195
2497 378. .	23-58-543
2497 387. . .	1-48-770
2497 389. . .	23-41-55
2497 390. . .	8-19-15
2497 391. . .	8-19-15
2497 392. . .	23-41-55
2497 394. . . .	1-87-2
2497 395. . .	23-41-55
2497 400. . .	23-33-20
2497 401. . .	1-48-70
2497 404. . .	23-41-55
2497 406. .	23-18-105
2497 413. . . .	8-15-4
2497 416. . . .	8-15-4
2497 421. .	23-67-160
2497 426. . .	1-87-22
2497 430. . . .	8-15-7
2497 433. . .	8-56-34
2497 434. . . .	8-15-4
2497 436. . . .	8-15-2
2497 439. . .	8-55-57
2497 442. . . .	8-15-4

PART NUMBER	CODE
2497 444. . .	1-48-801
	24-24-20
2497 445. . . .	8-15-4
2497 446. . .	8-15-52
2497 452. .	24-24-140
2497 453. . .	1-48-70
2497 457. . .	1-48-950
2497 461. . .	1-48-940
2497 466. . .	1-48-31
2497 469. . . .	8-15-2
2497 470. . . .	1-48-4
2497 480. . .	8-15-52
2497 481. . .	1-48-770
2497 489. . .	8-15-53
2497 492. . .	23-41-55
2497 500. . .	1-82-22
2497 501. . . .	1-82-4
2497 502. . . .	1-82-4
2497 506. . . .	1-82-6
2497 507. . . .	1-82-6
2497 509. . .	1-88-159
2497 517. . . .	1-88-6
2497 538. . . .	1-88-6
2497 541. . . .	1-88-1
2497 546. .	23-54-167
2497 548. . .	1-82-15
2497 550. .	23-54-210
2497 551. . .	8-37-155
2497 556. . .	8-37-499
2497 561. .	23-67-206
2497 562. . .	8-53-327
2497 569. . .	1-88-170
2497 580. . . .	1-82-4
2497 583. .	23-41-170
2497 584. .	23-41-170
2497 588. . .	8-33-121
2497 590. . . .	8-12-2
2497 597. .	23-67-200
2497 602. . .	1-87-30
2497 613. . .	21-30-57
2497 614. . .	21-30-49
2497 619. .	23-67-195
2497 620. . .	8-05-20
	8-53-294
2497 625. . .	21-30-23
2497 634. .	23-67-160
2497 635. .	23-67-160
2497 636. . .	1-48-777
2497 639. . . .	8-42-1
2497 642. . .	1-48-941
2497 643. . .	1-48-941
	24-01-65
2497 644. . .	1-48-941
2497 649. . .	1-87-22
2497 657. . .	1-48-942
	24-24-156
2497 667. . . .	8-39-3
2497 675. .	24-24-140
2497 676. . .	1-48-70

PART NUMBER	CODE
2497 677. . .	1-88-205
2497 681. . .	1-48-940
	8-53-296
2497 685. . .	1-48-942
	24-24-156
2497 689 . . .	8-20-8
2497 690. .	23-67-160
2497 694. . . .	8-15-2
2497 697. .	24-24-124
2497 701. . . .	8-16-6
2497 702. . .	1-48-70
2497 704. . .	1-87-22
2497 706. . .	21-30-23
2497 710. . .	1-48-942
	24-24-156
2497 715. . .	21-30-64
2497 724. . .	21-30-23
2497 733. .	24-24-140
2497 735. . .	21-30-53
2497 746. . .	1-48-942
	24-24-156
2497 755. .	24-24-159
2497 757. .	24-24-175
2497 758. . .	24-24-5
2497 760. .	24-24-164
2497 761. .	24-24-164
2497 763. .	24-24-164
2497 764. .	24-24-164
2497 768. . . .	8-15-4
2497 771. . .	21-30-30
2497 773. . . .	8-37-98
2497 774. . .	8-15-20
	23-18-121
	23-41-167
2497 778. . .	8-05-14
	8-53-270
2497 779. . .	8-37-98
2497 788. . .	1-87-12
2497 795. .	24-24-124
2497 796. . .	14-02-32
2497 802. .	23-67-160
2497 805. . .	1-87-22
2497 807. . .	14-02-69
2497 810. . .	1-48-70
2497 815. . .	1-48-70
2497 818. . .	1-48-70
2497 819. .	24-24-140
2497 837. . .	8-50-156
2497 841. . .	1-48-942
2497 843. . .	1-48-770
2497 862. . . .	1-48-4
2497 863. . .	1-48-23
	24-01-18
2497 869. . .	1-48-127
	24-01-44
	24-24-148
2497 884. . .	1-87-58
2497 944. . . .	8-19-3
2497 945. . . .	8-19-3
2497 996. . .	1-48-770

PART NUMBER	CODE
2499 010. . .	8-11-24
2499 012. . .	8-11-16
2499 022. . .	8-35-111
	23-17-2
2499 027. . .	23-17-24
2499 091. . .	23-59-25
2499 102. .	23-58-437
2499 149. . .	23-17-2
2499 258. .	23-19-103
2499 275. . .	23-17-38
2499 284. .	21-30-408
2499 289. . .	23-26-87
2499 300. .	23-04-229
2499 346. . .	23-38-36
2499 352. . .	23-38-18
2499 353. . .	23-38-26
2499 377. . .	23-06-28
2499 384. . .	23-26-23
2499 385. . .	23-26-23
2499 386. . .	23-26-23
2499 387. . .	23-26-23
2499 436. . .	23-26-23
2499 437. . .	23-26-23
2499 469. . .	23-26-23
2499 470. . .	23-20-14
2499 471. . .	23-20-14
2499 472. . .	23-20-14
2499 473. . .	23-20-14
2499 474. . .	23-20-14
2499 475. . .	23-20-14
2499 476. . .	23-20-14
2499 477. . .	23-20-14
2499 480. . .	23-20-24
2499 481. . .	23-20-24
2499 482. . .	23-20-24
2499 483. . .	23-20-24
2499 484. . .	23-20-24
2499 485. . .	23-20-24
2499 488. . .	23-20-24
2499 489. . .	23-20-24
2490 491. . .	23-02-84
2499 492. . .	23-20-19
2499 493. . .	23-20-19
2499 496. . .	23-20-19
2499 520 . .	23-26-47
2499 542. . .	23-26-23
2499 543. . .	23-26-23
2499 545. . .	23-26-23
2499 570. . .	23-26-47
2499 590. . .	23-02-82
2499 622. . .	23-26-23
2499 623. . .	23-26-23
2499 624. . .	23-26-23
2499 648. . .	23-26-23
2499 649. . .	23-26-23
2499 650. . .	23-26-23
2499 651. . .	23-26-23
2499 652. . .	23-26-23
2499 653. . .	23-26-23
2499 654. . .	23-26-23

MyMopar.com

PART NUMBER	CODE
2499 766. . .	23-26-23
2499 767. . .	23-26-23
2499 788. . .	23-26-23
2499 789. . .	23-26-23
2499 790. . .	23-26-47
2499 791. . .	23-26-47
2499 853. . .	23-26-23
	23-26-47
2499 970. . .	23-20-24
2499 971. . .	23-20-24
2505 561. .	21-30-413
2520 004. . .	23-08-12
2520 009. . .	23-10-18
	23-15-14
2520 012. . .	23-10-1
2520 013. . .	23-10-9
2520 014. . .	23-10-9
2520 132. . .	23-15-38
2520 133. . .	23-15-38
2520 152. . .	23-21-70
2520 154. . .	23-47-6
2520 155. . .	23-47-6
2520 156. .	23-47-344
2520 157. .	23-47-344
2520 160. . .	23-18-26
2520 162. . .	23-18-26
2520 163. . .	23-18-26
2520 172. . .	23-18-26
2520 173. . .	23-18-26
2520 178. . .	23-18-29
2520 179. . .	23-18-29
2520 183. .	23-54-186
2520 184. . .	23-54-1
2520 189. . .	23-54-31
2520 230. . .	15-13-2
2520 238. . .	23-54-4
2520 239. . .	23-54-4
2520 240. . .	23-54-4
2520 241. . .	23-54-4
2520 246. .	23-54-136
2520 247. .	23-54-136
2520 250. .	23-54-140
2520 254. . .	23-47-6
2520 255. . .	23-47-6
2520 260. . . .	1-67-1
2520 261. . . .	1-67-5
2520 275. .	23-54-144
2520 302. .	23-64-308
2520 303. .	23-64-308
2520 304. .	23-64-308
2520 305. .	23-64-308
2520 320. .	23-64-308
2520 321. .	23-64-308
2520 322. .	23-63-308
2520 333. .	23-63-308
2520 334. .	23-64-308
2520 335. .	23-64-308
2520 338. . .	23-15-1
2520 339. . .	23-15-1
2520 358. . .	23-18-11
2520 386. . .	23-21-18
2520 392. . .	23-14-53
2520 397. . .	23-21-15
2520 403. . .	23-47-6
2520 418. . .	23-39-34
2520 419. . .	23-39-34
2520 429. . .	23-19-84
2520 435. . .	23-48-31
2520 446. .	23-64-308
2520 447. .	23-64-308
2520 448. .	23-64-308
2520 449. .	23-64-308
2520 463. . .	23-09-53
2520 468. .	23-64-308
2520 469. .	23-64-308
2520 470. .	23-64-308
2520 471. .	23-64-308
2520 482. .	23-64-308
2520 483. .	23-64-308
2520 484. .	23-64-308
2520 485. .	23-64-308
2520 490. . .	23-39-2
	23-41-7
2520 496. . .	23-19-30
2520 504. . .	23-18-20
2520 508. . .	23-18-20
2520 510. . .	23-18-20
2520 511. . .	23-18-20
2520 512. . .	23-18-20
2520 524. . .	23-39-34
2520 525. . .	23-39-34
2520 534. . .	23-39-44
	23-41-7
2520 535. . .	23-39-44
	23-41-7
2520 537. . .	23-39-44
2520 555. . .	1-67-15
2520 556. . .	23-39-2
	23-41-7
2520 557. . .	23-39-2
2520 562. . .	23-64-12
2520 565 . .	23-18-42
2520 566. .	23-41-106
2520 567. .	23-41-106
2520 572. . .	23-14-10
2520 573. . .	23-14-10
2520 582. . .	23-48-20
2520 585. . .	23-17-27
	23-17-51
2520 600. . .	23-18-29
2520 610. .	23-58-227
2520 611. .	23-58-227
2520 624. . .	23-17-5
2520 631. .	23-54-180
2520 636. .	23-54-175
2520 637. .	23-54-142
2520 642. .	23-54-106
2520 645. .	23-19-204
2520 650. .	23-19-200
2520 656. . .	15-19-46
2520 657. . .	15-19-46
2520 658. .	23-64-269
2520 659. .	23-64-269
2520 662. .	23-64-281
2520 665. . .	23-14-64
2520 672. . .	15-19-2
2520 673. . .	15-19-2
2520 676. .	23-64-291
2520 678. . .	23-18-20
2520 679. . .	23-18-20
2520 680. . .	23-18-20
2520 681. . .	23-18-20
2520 682. . .	23-18-20
2520 684. . .	23-54-6
2520 690. . .	23-18-35
2520 691. . .	23-54-14
2520 692. . .	23-08-60
2520 693. . .	23-08-60
2520 697. . .	23-18-42
2520 703. . .	23-21-26
2520 704. . .	23-41-4
2520 705. . .	23-41-4
2520 706. . .	23-41-4
2520 707. . .	23-41-4
2520 708. . .	23-41-4
2520 709. . .	23-41-4
2520 719. . .	23-21-14
2520 723. . .	23-21-26
2520 724. . .	23-18-5
2520 725. . .	23-18-5
2520 735. .	23-19-105
2520 739. . .	23-19-94
2520 747. . .	23-19-79
2520 748. .	23-19-109
2520 749. .	23-19-109
2520 750. .	23-19-110
2520 751. . .	23-19-98
2520 752. . .	15-11-34
2520 756. .	23-64-308
2520 757. .	22-64-308
2520 758. .	23-64-308
2520 759. .	23-64-308
2520 766. . .	15-11-5
2520 768 . .	23-18-26
2520 793. . .	23-18-35
2520 808. . .	23-17-4
2520 809. . .	23-17-4
2520 813. . .	23-17-2
2520 812. . .	23-17-4
2520 818. . .	23-17-4
2520 822. . .	8-35-111
	23-17-2
2520 824. . .	8-35-111
	23-17-2
2520 825. . .	8-35-111
	23-17-2
2520 826. . .	8-35-111
	23-17-2
2520 827. . .	8-35-111
	23-17-2
2520 829. .	23-18-107
2520 832. .	23-18-115
2520 833. .	23-18-115
2520 834. . .	23-14-68
2520 835. . .	23-14-68
2520 838. .	23-18-118
2520 839. .	23-18-118
2520 840. . .	23-18-26
2520 841. . .	23-18-26
2520 846. . .	23-18-35
2520 848. .	23-48-205
2520 850. .	23-48-206
2520 851. .	23-48-204
2520 852. .	23-48-203
2520 853. . .	23-48-19
2520 859. .	23-47-413
2520 860. . .	23-41-4
2520 861. . .	23-41-4
2520 862. . .	23-54-72
2520 864. . .	23-18-35
2520 874. . .	23-06-37
2520 880. . .	23-18-21
2520 881. . .	23-18-21
2520 883. . .	23-47-66
2520 889. . .	23-32-79
2520 890. . .	23-32-79
2520 900. .	23-41-106
2520 901. .	23-41-106
2520 914. .	23-41-270
2520 915. . .	23-41-270
2520 927. . .	23-06-28
2520 934. . .	23-18-26
2520 935. . .	23-18-26
2520 936. . .	23-18-26
2520 937. . .	23-18-26
2520 938. .	23-54-125
2520 940. .	23-18-107
2520 941. .	23-18-107
2520 942. .	23-18-107
2520 943. .	23-18-107
2520 952. . .	23-17-13
2520 954. . .	23-54-92
2520 968. .	23-47-432
2520 969. .	23-47-432
2520 970. .	23-47-432
2520 976. . .	23-18-13
2520 977. . .	23-18-13
2520 980. . .	23-18-13
2520 981. . .	23-18-13
2520 985. .	23-34-207
2520 993. . .	23-21-44
2520 995. . .	23-21-48
2520 996. . .	23-21-16
2520 998. . .	23-17-36
2521 017. .	24-28-113
2521 059. .	24-28-220
2521 072. . .	24-28-19
2521 075. . .	24-28-19
2521 082. .	24-28-108
2521 099. .	24-28-399
2521 100. .	24-28-399
2521 108. .	24-28-399
2521 111. . .	24-28-43
2521 117. . .	24-01-24
2521 137. . .	24-29-1
2521 139. . . .	24-29-1
2521 141. . .	24-29-1
2521 146. .	24-28-195
2521 147. .	24-28-210
2521 152. . .	24-28-31
2521 153. . .	24-24-67
2521 155. . .	1-48-331
	24-28-73
2521 165. . .	24-27-5
2521 172. .	24-28-326
2521 184. .	24-28-387
2521 185. .	24-28-387
2521 228. . .	1-48-575
2521 229. .	24-26-100
2521 232. .	24-28-211
2521 233. . .	24-28-24
2521 240. . .	24-01-36
2521 241. . .	24-24-5
2521 243. . .	24-01-35
2521 246. . .	24-01-38
2521 268. . .	1-48-88
2521 269. . .	1-48-46
2521 274. .	24-28-387
2521 275. .	24-28-387
2521 284. .	24-28-404
2521 302. . .	24-28-78
2521 325. . .	24-27-5
2521 326. . .	24-27-5
2521 336. . .	1-48-179
	24-28-72
2521 351. .	24-28-387
2521 352. .	24-28-387
2521 353. .	24-28-387
2521 356. . .	24-28-78
2521 367. .	24-28-404
2521 369. .	24-26-100
2521 371. . .	24-28-24
2521 374. . .	24-26-20
2521 380. .	24-28-405
2521 381. .	24-28-405
2521 384. .	24-28-405
2521 409. .	1-48-832
2521 431. . .	24-28-55
2521 432. .	24-28-334
2521 439. .	24-28-338
2521 440. .	24-28-336
2521 441. .	24-28-336
2521 447. . . .	1-47-1
2521 448. . . .	1-47-1
2521 466. .	24-28-107
2521 479. . .	24-01-65
2521 481. . .	24-28-78
2521 483. . .	24-28-78
2521 494. . .	24-24-5
2521 497. .	24-28-210

MyMopar.com

PART NUMBER	CODE
2521 499	1-47-6
2521 501	24-28-117
2521 502	24-29-1
2521 503	24-29-1
2521 509	24-28-220
2521 544	24-28-203
2521 569	24-29-1
2521 571	24-28-100
2521 572	24-28-100
2521 573	24-28-100
2521 575	1-47-20
2521 621	24-28-7
2521 629	24-28-117
2521 637	1-47-1
2521 642	24-24-150
2521 650	24-28-8
2521 653	24-28-5
2521 654	24-25-20
2521 656	1-48-405
2521 657	1-48-407
2521 668	1-47-4
2521 669	1-47-1
2521 672	24-01-36
2521 688	24-28-24
2521 691	24-28-73
2521 694	24-28-108
2521 696	24-28-73
2521 702	24-28-99
2521 712	24-28-117
2521 713	24-28-118
2521 726	24-28-17
2521 729	24-28-72
2521 731	24-28-205
2521 732	24-28-205
2521 733	24-28-205
2521 734	24-28-205
2521 735	24-28-205
2521 736	24-28-205
2521 743	24-27-15
2521 748	24-28-318
2521 755	24-26-100
2521 764	1-48-603
	24-28-186
2521 772	24-26-100
2521 778	24-26-100
2521 781	24-28-29
2521 782	24-28-29
2521 788	24-28-300
2521 790	24-28-302
2521 795	24-26-101
2521 797	24-26-100
2521 800	24-28-29
2521 802	24-28-78
2521 803	24-28-78
2521 818	24-26-100
2521 824	24-25-20
2521 827	24-28-397
2521 854	24-28-300
2521 856	24-26-100
2521 862	24-26-20
2521 864	24-28-6
	24-28-17
2521 879	24-01-36
2521 884	24-26-100
2521 889	1-48-1
2521 890	1-48-5
2521 891	1-48-5
2521 893	1-48-1
2521 894	1-48-1
2521 895	1-48-1
2521 896	24-26-100
2521 900	24-26-100
2521 901	24-26-100
2521 902	24-25-33
2521 920	24-28-18
2521 923	24-25-20
2521 924	1-48-1
2521 941	1-48-151
2521 952	24-24-5
2521 953	24-28-10
2521 956	1-48-599
2521 963	24-25-20
2521 968	24-28-87
2521 976	24-26-100
2521 999	24-25-20
2522 169	23-26-76
2524 014	12-07-1
2524 015	12-07-1
2524 043	7-16-22
2524 046	8-50-305
2524 047	8-50-305
2524 050	7-26-2
2524 064	7-16-11
2524 065	7-16-11
2524 067	7-35-14
2524 068	7-35-14
2524 074	7-16-11
2524 075	7-16-11
2524 076	7-16-11
2524 082	7-16-11
2524 083	7-16-11
2524 088	7-16-22
2524 089	7-16-22
2524 097	8-55-158
2524 107	12-06-3
2524 122	8-55-157
2524 123	8-55-214
2524 127	8-34-365
2524 129	7-26-32
2524 138	15-11-55
2524 146	7-16-22
2524 156	8-55-136
2524 157	8-55-136
2524 167	8-56-23
2524 168	8-56-23
2524 170	8-55-214
2524 176	7-08-13
2524 177	7-08-13
2524 192	8-55-158
2524 193	8-55-158
2524 198	7-16-25
2524 199	7-33-18
2524 266	7-16-47
2524 301	7-33-18
2524 306	7-08-2
2524 313	7-08-2
2524 326	8-55-140
2524 327	8-55-140
2524 328	8-55-214
2524 329	7-33-1
2524 334	8-55-158
2524 335	8-55-158
2524 348	8-55-232
2524 349	8-55-232
2524 350	8-55-7
2524 351	8-55-7
2524 354	8-55-158
2524 355	8-55-158
2524 367	8-55-214
2524 368	8-55-140
2524 369	8-55-140
2524 370	8-55-7
2524 371	8-55-7
2524 376	8-55-7
2524 377	8-55-7
2524 380	8-55-158
2524 381	8-55-158
2524 396	8-55-7
	8-55-158
2524 397	8-55-7
	8-55-158
2524 408	8-55-140
2524 409	8-55-140
2524 410	8-55-214
2524 426	8-55-158
2524 427	8-55-158
2524 446	7-26-30
2524 447	7-26-30
2524 464	7-16-22
2524 465	7-16-22
2524 466	7-16-22
2524 471	8-34-38
	23-58-250
2524 494	7-08-13
2524 501	7-08-2
2524 508	7-08-2
2524 516	8-50-315
2524 517	8-50-315
2524 519	8-50-338
2524 522	8-55-232
2524 523	8-55-232
2524 524	8-57-10
2524 525	8-34-5
2524 526	8-34-5
2524 529	8-34-1
2524 530	7-16-11
2524 531	7-16-11
2524 544	12-04-23
2524 545	12-04-23
2524 550	12-04-23
2524 551	12-04-23
2524 730	8-55-8
2524 731	8-55-8
2524 766	12-04-4
2524 767	12-04-4
2524 770	12-04-4
2524 771	12-04-4
2524 782	12-15-11
2524 911	7-16-11
2524 913	7-17-5
2524 914	7-17-5
2524 930	8-34-1
2524 931	8-34-1
2524 932	7-08-2
2524 936	7-08-2
2524 952	7-11-3
2524 956	7-11-3
2524 957	7-11-3
2524 961	7-11-3
2524 962	7-11-3
2524 963	7-11-3
2524 964	7-11-3
2524 965	7-11-3
2524 966	7-11-3
2524 968	7-11-3
2524 969	7-11-3
2524 970	7-11-3
2524 972	7-11-3
2524 974	7-11-3
2524 975	7-11-3
2524 976	7-11-3
2524 978	7-11-3
2524 982	7-11-3
2524 983	7-11-3
2524 986	7-11-3
2524 989	7-11-3
2524 990	7-11-3
2524 991	7-11-3
2524 992	7-11-3
2525 007	5-100-1
2525 008	9-34-5
2525 009	9-34-5
2525 010	9-34-5
2525 011	9-34-5
2525 012	9-34-5
2525 013	9-34-5
2525 014	9-34-5
2525 018	21-134-5
2525 019	21-134-5
2525 020	17-12-4
2525 021	17-12-4
2525 030	6-17-3
2525 034	9-58-1
2525 039	17-23-3
2525 040	17-23-3
2525 062	9-03-5
2525 070	2-08-59
2525 072	2-10-61
2525 073	2-07-1
2525 074	2-07-1
2525 081	9-58-1
2525 083	2-10-57
2525 086	2-14-1
2525 087	2-14-1
2525 090	9-50-1
2525 093	17-11-3
2525 094	17-11-3
2525 095	17-11-3
2525 097	5-39-1
2525 099	7-42-4
2525 250	23-67-16
2525 251	8-27-279
2525 252	1-88-124
2525 253	1-88-160
2525 254	14-67-1
2525 257	8-50-334
2525 258	8-50-334
2525 259	8-50-334
2525 261	8-56-8
2525 262	8-56-8
2525 263	8-55-194
2525 264	8-55-194
2525 266	8-27-279
2525 269	23-67-98
2525 270	23-67-98
2525 346	23-67-2
2525 348	8-01-4
	8-01-17
2525 407	9-35-1
2525 408	9-35-1
2525 409	9-35-1
2525 415	3-33-1
2525 416	2-07-1
2525 417	2-07-1
2525 427	5-100-2
2525 430	17-23-3
2525 431	17-23-3
2525 432	17-23-3
2525 433	9-34-5
2525 434	9-34-5
2525 435	9-34-5
2525 436	9-34-5
2525 437	5-100-1
2525 442	9-58-1
2525 443	9-58-1
2525 444	17-23-3
2525 446	2-07-1
2525 447	2-07-1
2525 449	9-39-11
2525 450	2-10-55
2525 451	2-10-55
2525 452	2-10-55
2525 453	2-10-55
2525 454	5-03-1
2525 459	17-23-3
2525 460	17-23-3

MyMopar.com

PART NUMBER	CODE
2525 461.	17-23-3
2525 462.	5-03-1
2525 463.	5-03-1
2525 464.	6-14-1
2525 465.	6-14-1
2525 467.	5-100-2
2525 469.	17-16-1
2525 470.	9-50-1
2525 473.	6-17-3
2525 474.	17-11-3
2525 475.	6-01-3
2525 477.	5-100-1
2525 481.	19-01-3
2525 482.	21-01-3
2525 483.	21-01-3
2525 484.	9-32-2
2525 497.	9-35-1
2525 498.	7-43-1
2525 500.	8-55-158
2525 501.	8-55-158
2525 502.	8-55-194
2525 503.	8-55-194
2525 506.	8-56-8
2525 507.	8-56-8
2525 510.	8-56-8
2525 511.	8-56-8
2525 516.	8-56-8
2525 517.	8-57-54
2525 518.	8-50-334
2525 519.	8-50-334
2525 520.	8-50-334
2525 521.	8-50-334
2525 522.	8-56-8
2525 523.	8-56-8
2525 524.	8-55-158
2525 525.	8-55-158
2525 526.	8-55-158
2525 527.	8-55-158
2525 529.	8-52-135
2525 533.	8-36-1
2525 534.	8-36-1
2525 537.	8-36-1
2525 538.	8-27-279
2525 539.	8-55-1
2525 540.	8-55-1
2525 541.	8-55-158
2525 542.	8-55-158
2525 543.	8-55-1
2525 544.	8-55-1
2525 545.	8-55-158
2525 546.	8-55-158
2525 562.	23-15-6
2525 563.	23-15-6
2525 590.	23-34-166
2525 598.	23-19-178
2525 600.	8-55-136
2525 601.	8-55-136
2525 602.	8-55-194
2525 603.	8-55-194
2525 604.	8-56-8
2525 639.	8-27-205
2525 643.	8-55-136
2525 644.	8-55-136
2525 645.	8-55-194
2525 646.	8-55-194
2525 647.	8-56-8
2525 648.	8-27-250
2525 649.	8-50-334
2525 650.	8-50-334
2525 655.	1-87-61
2525 657.	1-87-61
2525 659.	24-25-3
2525 662.	8-50-334
2525 663.	1-36-1
2525 669.	8-50-349
	8-55-57
2525 672.	8-36-1
2525 673.	8-36-1
2525 674.	8-57-54
2525 676.	8-50-334
2525 677.	8-50-334
2525 680.	8-55-194
2525 681.	8-55-194
2525 682.	8-55-136
2525 683.	8-55-136
2525 684.	8-50-334
2525 685.	8-50-334
2525 686.	8-55-194
2525 687.	8-55-194
2525 688.	8-55-194
2525 689.	8-55-194
2525 690.	8-55-194
2525 691.	8-55-194
2525 692.	8-55-1
2525 693.	8-55-1
2525 694.	8-55-194
2525 695.	8-55-194
2525 696.	8-55-194
2525 697.	8-55-194
2525 698.	8-55-194
2525 699.	8-55-194
2525 770.	14-30-7
2525 771.	14-30-4
2525 774.	14-30-4
2525 782.	14-41-3
2525 783.	14-35-39
2525 784.	14-35-33
2525 785.	14-35-39
2525 792.	14-30-4
2525 794.	14-34-10
2525 796.	14-34-10
2525 797.	14-34-10
2525 798.	14-30-8
2525 799.	14-35-1
2525 856.	12-01-5
2525 857.	12-01-5
2525 858.	12-01-5
2525 859.	12-01-5
2525 860.	12-01-5
2525 861.	12-01-5
2525 862.	12-01-5
2525 863.	12-01-5
2525 864.	12-01-5
2525 865.	12-01-5
2525 867.	7-26-15
2525 872.	7-26-15
2525 873.	23-34-167
2525 874.	23-34-167
2525 875.	23-34-167
2525 876.	23-34-167
2525 877.	23-64-66
2525 878.	23-58-224
2525 879.	23-58-224
2525 925.	23-64-299
2525 938.	1-76-1
2525 939.	1-76-1
2526 598.	23-48-99
2526 604.	23-19-84
2526 605.	23-19-84
2526 606.	23-19-84
2526 607.	23-19-84
2526 608.	23-34-166
2526 612.	23-19-59
2526 613.	8-47-69
2526 614.	23-34-275
2526 615.	23-34-275
2526 616.	23-09-9
	23-64-311
2526 617.	23-09-9
	23-64-311
2526 618.	23-64-311
2526 619.	23-64-311
2526 621.	23-58-333
2526 622.	23-58-230
2526 623.	23-58-230
2526 642.	23-04-205
2526 644.	23-48-99
2526 645.	23-48-99
2526 650.	13-66-116
2526 690.	8-55-23
2526 691.	8-55-23
2526 734.	23-48-88
2526 750.	23-63-33
2526 751.	23-63-33
2526 760.	23-48-99
2526 761.	23-48-99
2526 776.	23-26-46
2526 777.	23-26-46
2526 778.	23-26-46
2526 779.	23-26-46
2526 780.	23-26-41
2526 781.	23-26-41
2526 782.	23-22-53
2526 783.	23-22-53
2526 784.	23-63-33
2526 785.	23-63-33
2526 792.	23-63-55
2526 793.	23-63-55
2526 800.	23-59-35
2526 801.	23-59-35
2526 812.	23-34-212
2526 813.	23-34-212
2526 827.	23-64-12
2526 834.	23-63-33
2526 835.	23-63-33
2526 838.	23-63-37
2526 839.	23-63-37
2526 846.	23-34-29
2526 847.	23-34-29
2526 862.	23-04-241
2526 863.	23-04-241
2526 886.	23-64-280
2526 887.	23-64-280
2526 904.	23-64-299
2526 905.	23-64-299
2526 924.	23-64-299
2526 938.	23-42-59
2526 939.	23-42-59
2526 943.	23-42-59
2526 949.	23-48-88
2526 950.	23-59-35
2526 951.	23-59-35
2526 968.	8-55-23
2526 969.	8-55-23
2527 000.	23-64-299
2527 001.	23-19-178
2527 004.	23-64-281
2527 005.	23-64-281
2527 021.	23-54-82
2527 040.	23-64-299
2527 041.	23-64-299
2527 048.	23-42-56
2527 049.	23-42-56
2527 063.	14-87-2
2527 069.	23-42-32
2527 714.	23-19-198
2527 781.	23-34-178
2527 818.	23-32-112
2527 819.	23-32-112
2527 820.	23-54-136
2527 821.	23-54-136
2527 890.	23-64-299
2527 891.	23-64-299
2527 914.	23-36-53
2527 915.	23-36-53
2527 920.	23-64-12
2527 921.	23-64-12
2527 922.	23-04-205
2527 923.	23-40-157
2527 924.	23-04-205
2527 925.	23-04-205
2527 926.	23-26-47
2527 927.	23-26-47
2527 930.	23-26-47
2527 931.	23-26-47
2527 936.	23-04-207
2527 937.	23-04-207
2527 940.	23-48-99
2527 941.	23-48-99
2527 944.	23-48-99
2527 945.	23-48-99
2527 982.	23-64-4
2527 991.	23-26-69
2527 998.	23-26-69
2527 999.	23-26-69
2528 008.	23-26-45
2528 009.	23-26-45
2528 010.	23-26-45
2528 020.	23-22-145
2528 021.	23-22-145
2528 034.	23-26-41
2528 035.	23-26-41
2528 037.	23-64-17
2528 040.	23-64-17
2528 048.	23-34-212
2528 049.	23-34-212
2528 050.	23-34-212
2528 051.	23-34-212
2528 054.	23-26-14
2528 055.	23-26-14
2528 060.	23-26-41
2528 061.	23-26-41
2528 070.	23-22-86
2528 177.	23-58.490
2528 192.	23-58-605
2528 193.	23-58-603
2528 206.	23-58-215
2528 207.	23-58-215
2528 236.	23-58-607
2528 237.	23-58-213
2528 238.	23-58-605
2528 239.	23-58-607
2528 243.	23-58-490
2528 252.	23-58-75
2528 259.	23-58-75
2528 265.	23-58-603
2528 270.	23-58-84
2528 271.	23-58-84
2528 280.	23-58-573
2528 281.	23-58-573
2528 282.	23-58-573
2528 283.	23-58-573
2528 284.	23-58-573
2528 285.	23-58-573
2528 286.	23-58-572
2528 287.	23-58-572
2528 288.	23-58-572
2528 289.	23-58-572
2528 290.	23-58-572
2528 291.	23-58-572
2528 306.	23-26-46
2528 307.	23-26-46
2528 308.	23-22-86

MyMopar.com

PART NUMBER	CODE
2528 309	23-22-86
2528 310	23-22-86
2528 311	23-22-86
2528 334	23-26-41
2528 335	23-26-41
2528 340	23-26-41
2528 341	23-26-41
2528 348	23-26-41
2528 349	23-26-41
2528 351	8-47-126
2528 374	23-34-212
2528 375	23-34-212
2528 376	23-40-103
2528 377	23-40-103
2528 384	23-34-213
2528 385	23-34-213
2528 386	23-22-86
2528 387	23-22-86
2528 391	23-34-190
2528 392	23-34-213
2528 393	23-34-213
2528 400	23-42-38
2528 416	23-32-70
2528 417	23-32-70
2528 429	23-34-216
2528 436	23-09-67
2528 437	23-09-67
2528 438	23-26-18
2528 439	23-26-18
2528 440	23-26-47
2528 441	23-26-47
2528 450	23-40-177
2528 451	23-40-177
2528 452	23-40-150
2528 453	23-40-150
2528 454	23-40-170
2528 455	23-40-155
2528 457	23-40-187
2528 458	23-40-150
2528 464	23-40-171
2528 465	23-40-180
2528 484	23-42-46
2528 485	23-42-46
2528 526	23-26-42
2528 527	23-26-42
2528 534	23-64-85
2528 535	23-64-85
2528 538	23-19-82
2528 539	23-19-82
2528 577	23-19-206
2528 580	23-42-46
2528 581	23-42-46
2528 608	23-63-37
2528 639	23-19-36
2528 659	1-67-3 23-49-9
2528 669	1-67-16
2528 772	23-22-86
2528 773	23-22-86
2528 780	23-63-55
2528 781	23-63-55
2528 782	23-48-98
2528 783	23-48-98
2528 786	23-42-32
2528 787	23-42-32
2528 793	23-64-12
2528 837	23-19-30
2528 838	23-63-55
2528 839	23-63-55
2528 856	23-63-55
2528 857	23-63-55
2528 866	23-51-41
2528 867	23-51-41
2528 868	23-51-41
2528 869	23-51-41
2528 890	23-34-234
2528 891	23-34-234
2528 896	23-34-27
2528 897	23-34-27
2528 898	23-34-27
2528 899	23-34-27
2529 024	23-58-480
2529 025	23-58-480
2529 032	23-26-41
2529 033	23-26-41
2529 034	23-26-41
2529 035	23-26-41
2529 050	23-63-37
2529 082	23-64-311
2529 083	23-64-311
2529 084	23-64-311
2529 085	23-64-311
2529 092	23-63-104
2529 093	23-63-104
2529 094	23-63-105
2529 095	23-63-105
2529 110	23-23-11
2529 117	23-19-206
2529 120	23-26-47
2529 121	23-40-180
2529 122	23-63-136
2529 123	23-63-136
2529 124	23-48-34
2529 125	23-48-34
2529 130	23-63-104
2529 131	23-63-104
2529 134	23-26-14
2529 135	23-26-14
2529 138	23-64-198
2529 139	23-64-198
2529 142	23-26-13
2529 277	23-40-187
2529 323	23-63-308
2529 421	23-40-157
2529 429	23-36-15
2529 430	23-34-275
2529 431	23-34-275
2529 922	23-34-214
2529 923	23-34-214
2529 942	23-48-93
2529 943	23-48-93
2529 976	23-40-187
2529 980	23-51-5
2529 981	23-51-5
2529 982	23-51-5
2529 983	23-51-5
2529 984	23-51-5
2529 985	23-51-6
2529 997	23-32-70
2530 000	5-100-119
2530 001	5-100-193
2530 003	5-100-33
2530 004	5-113-17
2530 005	5-100-161
2530 006	5-100-88
2530 007	5-100-87
2530 008	5-100-86
2530 010	5-100-142
2530 011	5-100-4
2530 012	5-100-62
2530 014	5-113-17
2530 015	5-100-33
2530 016	5-100-119
2530 017	5-100-161
2530 020	5-113-17
2530 021	5-100-195
2530 022	5-100-133
2530 023	5-100-134
2530 024	5-100-9
2530 025	5-100-19
2530 026	5-100-32
2530 027	5-113-17
2530 028	5-113-23
2530 030	5-100-7
2530 031	5-100-161
2530 032	5-105-1
2530 033	5-105-6
2530 036	5-100-33
2530 038	1-100-88
2530 046	5-100-20
2530 048	5-100-2
2530 050	11-05-1
2530 057	11-02-4
2530 061	11-09-3
2530 062	11-10-3
2530 064	11-05-4
2530 065	11-05-1
2530 070	11-09-3
2530 072	11-05-1
2530 078	11-09-3
2530 079	11-09-3
2530 080	11-01-1
2530 081	11-08-24
2530 085	11-05-1
2530 091	11-10-3
2530 093	11-10-3
2530 095	11-05-1
2530 120	11-06-8
2530 126	22-03-1
2530 127	22-03-1
2530 176	8-33-12
2530 177	8-33-12
2530 181	19-14-1
2530 182	19-46-3
2530 184	21-30-6
2530 186	8-33-4
2530 189	19-15-43
2530 191	19-46-43
2530 196	19-14-1
2530 197	19-14-1
2530 198	21-30-2
2530 199	21-30-7
2530 208	8-33-4
2530 209	8-33-5
2530 217	8-33-4
2530 219	8-33-6
2530 220	8-33-12
2530 221	8-33-12
2530 222	8-33-4
2530 223	8-33-4
2530 227	19-46-8
2530 229	19-14-24
2530 233	19-14-21
2530 235	19-14-24
2530 238	19-15-74
2530 240	19-46-8
2530 242	21-30-21
2530 243	21-30-26
2530 244	21-30-23
2530 245	21-30-24
2530 249	21-30-5
2530 256	8-33-5
2530 258	8-33-6
2530 262	8-33-4
2530 268	8-33-4
2530 270	8-33-4
2530 273	8-33-6
2530 274	8-33-6
2530 277	14-02-18
2530 280	14-02-18
2530 282	13-34-3
2530 283	12-04-4
2530 290	12-01-26
2530 296	14-02-18
2530 297	14-02-18
2530 298	14-02-18
2530 379	6-16-1
2530 390	6-14-1
2530 391	6-13-1
2530 402	6-52-1
2530 407	5-31-18
2530 423	6-24-1
2530 424	6-24-1
2530 426	5-28-8 6-39-2
2530 428	6-52-5
2530 429	6-52-5
2530 430	6-52-4
2530 435	6-52-10
2530 443	6-19-2
2530 444	6-19-3
2530 500	19-14-10
2530 503	19-14-10
2530 504	19-14-23
2530 506	19-14-40
2530 507	19-14-10
2530 513	19-14-40
2530 514	19-14-10
2530 517	19-14-10
2530 518	19-14-10
2530 523	19-14-40
2530 524	19-14-10
2530 529	19-14-68
2530 534	19-15-4
2530 535	19-15-4
2530 536	21-30-24
2530 538	19-15-17
2530 539	19-15-44
2530 540	19-15-35
2530 541	19-15-23
2530 548	19-46-22
2530 554	19-15-4
2530 561	19-15-4
2530 562	19-15-4
2530 563	19-15-4
2530 564	19-15-4
2530 566	19-14-38
2530 570	19-14-4
2530 575	19-46-3
2530 582	19-46-55
2530 587	21-30-24
2530 590	21-30-69 21-30-369
2530 591	21-30-24
2530 713	14-86-1
2530 714	14-86-1
2530 715	14-86-1
2530 722	14-86-48
2530 723	14-86-30
2530 730	11-05-1
2530 732	11-05-1
2530 737	11-05-1
2530 738	11-05-1
2530 740	11-10-3
2530 753	11-05-4
2530 754	11-05-4
2530 755	11-05-4
2530 756	11-05-1
2530 758	11-05-1
2530 766	11-05-1
2530 776	11-05-1
2530 786	11-01-1
2530 790	11-08-5
2530 820	19-15-23
2530 826	21-30-6
2530 828	21-30-6

MyMopar.com

PART NUMBER	CODE
2530 833	19-15-4
2530 839	8-33-5
2530 840	8-33-6
2530 843	8-33-6
2530 844	8-33-23
2530 848	19-15-28
2530 850	16-02-1
2530 862	16-02-1
2530 865	16-02-1
2530 868	16-02-1
2530 871	16-02-1
2530 878	16-02-1
2530 885	16-02-1
2530 890	16-02-1
2530 895	16-02-1
2530 923	16-02-1
2530 943	21-30-2
2530 953	8-33-4
2530 954	8-33-4
2530 956	19-30-43
2530 961	8-33-6
2530 965	8-33-6
2530 972	19-14-46
2530 973	19-14-1
2530 974	19-14-1
2530 975	13-35-1
2530 977	12-01-22
2530 981	12-04-4
2530 982	12-01-26
2531 108	9-03-4
2531 111	9-39-12
2531 112	9-39-9
2531 113	9-39-10
2531 114	9-39-10
2531 115	9-39-5
2531 116	9-39-6
2531 117	9-39-21
2531 127	9-39-5
2531 128	9-39-5
2531 129	9-39-5
2531 304	24-28-78
2531 635	24-28-78
2532 080	9-03-4
2532 087	9-59-13
2532 094	9-03-28
2532 096	8-36-4
2532 190	9-15-1
2532 191	14-89-58
2532 200	24-25-15
2532 215	10-03-7
2532 216	10-03-4
2532 235	9-46-33
2532 236	9-48-6
2532 237	9-48-6
2532 248	7-06-1
2532 253	9-03-28
2532 257	7-02-1
2532 258	9-39-15
2532 281	9-17-7
2532 302	14-30-1
2532 303	14-30-1
2532 305	14-30-1
2532 309	14-30-1
2532 312	14-30-1
2532 316	14-30-1
2532 320	14-30-1
2532 327	14-30-1
2532 329	14-11-9
2532 332	14-14-12
2532 334	14-11-9
2532 335	14-14-12
2532 339	14-01-1
2532 346	14-26-6
2532 349	14-11-9
2532 351	21-142-12
2532 355	14-11-9
2532 357	14-06-10
2532 363	14-11-34
2532 365	14-11-9
2532 377	14-11-9
2532 384	14-06-10
2532 386	14-26-6
2532 388	14-26-6
2532 391	14-11-9
2532 392	14-24-6
2532 393	14-24-6
2532 396	14-26-6
2532 408	19-54-115
2532 409	19-54-115
2532 483	8-28-15
2532 490	9-17-5
2532 491	9-08-5
2532 492	9-20-1
2532 508	14-14-12
2532 512	14-11-9
2532 514	14-11-9
2532 519	14-02-6
2532 521	14-11-1
2532 523	14-02-80
2532 525	14-25-11
2532 526	14-25-11
2532 528	14-25-11
2532 529	14-25-11
2532 530	14-25-11
2532 541	14-11-9
2532 568	14-39-45
2532 569	14-39-45
2532 570	14-39-45
2532 571	14-11-1
2532 577	14-11-29
2532 578	14-11-25
2532 579	14-11-25
2532 580	14-25-11
2532 581	14-25-5
2532 584	14-11-9
2532 586	21-142-12
2532 593	14-25-11
2532 595	14-11-9
2532 596	14-11-20
2532 602	9-03-28
2532 605	9-03-28
2532 609	14-29-7
2532 616	14-29-7
2532 6[illegible]	7-03-1
2532 657	7-03-1
2532 658	7-03-1
2532 674	9-01-24
2532 675	9-01-24
2532 678	9-01-24
2532 679	9-01-24
2532 680	9-01-24
2532 681	9-01-24
2532 682	9-01-24
2532 683	9-01-24
2532 684	9-01-24
2532 685	9-01-24
2532 699	9-03-28
2532 708	9-67-4
2532 709	9-31-4
2532 715	9-03-28
2532 749	9-15-1
2532 752	10-26-8
2532 753	10-26-18
2532 754	10-26-27
2532 756	10-26-6
2532 773	14-67-26
2532 781	9-03-28
2532 787	10-26-48
2532 788	10-26-48
2532 795	9-13-5
2532 913	14-25-10
2532 936	14-14-1
2532 937	14-11-9
2532 939	14-11-9
2533 000	14-88-21
2533 004	14-86-40
2533 009	14-86-40
2533 013	14-86-40
2533 017	14-86-40
2533 021	14-86-40
2533 076	5-13-1
2533 077	5-13-1
2533 079	5-13-1
2533 134	16-02-1
2533 143	16-02-1
2533 144	16-02-1
2533 154	16-02-1
2533 181	16-10-3
2533 185	9-71-12
2533 190	16-02-1
2533 191	16-02-1
2533 201	16-02-1
2533 202	16-03-1
2533 203	16-16-7
2533 204	16-16-1
2533 205	16-16-43
2533 206	16-16-6
2533 207	16-16-4
2533 208	16-14-7
2533 209	16-14-8
2533 213	16-02-1
2533 225	4-08-1
2533 228	4-23-28
2533 230	4-23-1
2533 231	4-23-1
2533 232	5-31-11
2533 235	5-27-1
2533 250	19-46-34
2533 253	19-46-3
2533 258	21-30-364
2533 259	19-46-12
2533 260	19-46-33
2533 261	19-46-6
2533 263	21-30-2
2533 267	19-14-10
2533 270	21-30-21
2533 271	21-30-11
2533 273	19-15-23
2533 277	19-46-18
2533 279	19-14-21
2533 282	19-46-8
2533 284	19-46-53
2533 286	19-15-82
2533 288	19-15-81
2533 291	19-46-3
2533 294	19-15-4
2533 295	19-15-4
2533 296	19-46-3
2533 297	19-14-1
2533 299	19-14-1
2533 725	4-10-1
2533 727	19-14-1
2533 728	19-14-1
2533 739	19-15-23
2533 745	4-25-2
2533 749	19-46-26
2533 750	14-86-40
2533 784	21-30-365
2533 812	5-03-6
2533 822	4-26-18
2533 824	22-04-2
2533 854	5-03-6
2533 892	4-26-17
2533 893	4-26-17
2533 931	19-46-3
2533 934	19-14-48
2533 945	8-33-15
2533 950	21-30-370
2533 954	19-46-8
2533 964	19-46-8
2533 968	19-46-12
2533 992	19-15-23
2533 996	21-30-365
2533 997	21-30-365
2533 998	19-14-68
2534 111	14-86-85
2534 113	14-90-1
2534 117	14-89-57
2534 133	5-05-10
2534 135	5-05-12
2534 140	5-05-13
2534 141	5-05-17
2534 142	5-67-1
2534 144	5-05-3
	22-03-1
2534 145	5-05-3
	22-03-1
2534 156	5-05-16
2534 157	5-05-16
2534 160	5-05-8
2534 162	5-03-5
2534 197	5-05-17
2534 279	19-46-13
2534 280	19-46-45
2534 282	21-30-369
2534 283	19-14-38
2534 315	5-58-1
2534 325	5-39-3
2534 328	5-39-24
2534 329	5-39-21
2534 347	5-34-1
2534 351	5-100-87
2534 375	19-46-16
2534 380	19-46-3
2534 382	19-46-16
2534 390	19-15-28
2534 410	21-30-365
2534 411	4-10-1
2534 412	21-30-365
2534 413	21-30-365
2534 415	4-10-1
2534 430	11-01-1
2534 431	11-01-1
2534 432	11-01-1
2534 433	11-01-1
2534 434	11-01-1
2534 440	11-01-1
2534 441	11-01-1
2534 442	11-01-1
2534 443	11-01-1
2534 445	11-05-1
2534 448	11-08-5
2534 450	11-05-1
2534 460	11-10-3
2534 501	19-48-1
2534 502	19-48-1
2534 503	19-48-1
2534 504	19-48-1
2534 512	21-30-407
2534 525	5-31-18
2534 539	6-27-5
2534 541	6-38-1
2534 544	5-27-1
2534 546	6-43-1
2534 548	6-52-10
2534 549	6-52-10
2534 557	6-52-1
2534 560	5-31-15

MyMopar.com

PART NUMBER	CODE
2534 563	5-31-15
2534 568	6-52-1
2534 600	5-58-1
2534 613	5-62-1
2534 666	4-26-17
2534 667	4-26-17
2534 726	5-13-1
2534 727	5-13-1
2534 732	5-13-1
2534 733	5-13-1
2534 758	5-20-9
2534 759	5-20-9
2534 760	5-20-20
2534 850	5-03-1
2534 853	5-03-1
2534 856	5-03-1
2534 859	5-03-1
2534 862	5-03-5
2534 865	5-03-5
2534 868	5-03-5
2534 871	5-03-5
2534 914	5-20-18
2534 915	5-64-1
2534 922	5-70-1
2534 923	5-71-1
2535 890	2-14-3
2535 891	2-14-3
2535 892	2-14-3
2535 893	2-14-3
2536 016	14-29-4
2536 080	8-28-15
2536 081	8-28-32
2536 082	8-28-51
2536 083	24-25-10
2536 084	24-25-10
2536 089	9-01-24
2536 101	8-28-51
2536 102	24-25-10
2536 103	8-28-32
2536 104	8-28-15
2536 135	14-30-1
2536 140	8-28-36
2536 141	24-25-10
2536 142	24-25-10
2536 150	14-26-6
2536 152	14-39-45
2536 153	14-11-9
2536 154	14-68-8
2536 163	14-11-9
2536 186	10-26-6
2536 201	14-11-9
2536 203	21-142-12
2536 207	14-30-1
2536 209	14-30-1
2536 212	14-30-1
2536 213	14-30-1
2536 214	14-30-1
2536 216	14-06-10
2536 217	14-26-6
2536 219	14-14-1
2536 222	14-11-9
2536 228	14-02-6
2536 400	9-45-1
2536 409	8-36-4
2536 415	7-02-1
2536 435	9-03-28
2536 453	14-06-1
2536 454	14-06-1
2536 455	14-06-1
2536 462	14-06-1
2536 503	8-28-15
2536 504	8-28-32
2536 517	7-14-4
2536 518	7-14-4
2536 597	9-11-7
2536 620	9-01-24
2536 649	9-02-37
2536 675	7-07-1
2536 677	7-07-1
2536 695	9-03-28
2536 725	7-43-1
2536 726	9-05-5
2536 766	14-85-31
2536 784	14-29-7
2536 796	14-29-28
2536 797	9-39-6
2536 798	9-39-6
2536 799	9-39-6
	14-25-11
2536 806	14-13-1
2536 834	14-06-10
2536 835	14-06-10
2536 836	14-06-10
2536 846	14-01-38
2536 847	14-24-4
2536 885	14-30-1
2536 898	14-30-1
2536 905	7-06-1
2536 906	9-01-24
2536 908	8-28-36
2536 909	8-28-15
2537 013	19-54-219
2537 014	19-54-246
2537 015	19-54-246
2537 017	19-58-7
2537 018	19-58-14
2537 023	19-58-33
2537 028	19-58-11
2537 051	19-54-246
2537 052	19-54-246
2537 053	19-54-246
2537 136	19-02-4
2537 531	19-58-14
2537 534	19-58-9
2537 600	19-58-14
2538 011	21-119-15
2538 013	21-42-28
2538 014	21-42-29
2538 016	21-42-23
2538 017	21-42-23
2538 018	21-42-23
2538 019	21-42-23
2538 036	21-139-4
2538 047	21-133-7
2538 049	21-139-40
2538 050	21-139-4
2538 066	21-10-16
2538 067	21-10-16
2538 068	21-15-2
2538 069	21-15-2
2538 075	21-10-16
2538 195	21-15-2
2538 196	21-09-2
2538 197	21-09-29
2538 202	21-10-31
2538 251	21-134-5
2538 253	21-134-36
2538 350	21-02-1
2538 351	21-02-1
2538 352	21-02-1
2538 353	21-02-1
2538 421	21-39-3
2538 461	21-136-5
2538 607	21-42-23
2538 617	21-133-25
2538 645	21-133-15
2539 096	17-19-3
2539 474	17-11-5
2539 475	17-11-5
2541 330	24-25-3
2541 331	24-25-154
2541 332	24-25-162
2545 730	24-25-107
2545 731	24-25-107
2545 732	24-25-107
2570 002	15-19-35
2570 003	15-19-35
2570 004	23-06-13
2570 017	23-64-28
2570 037	23-31-33
2570 040	23-61-116
2570 042	4-08-3
2570 058	23-63-105
2570 059	23-63-105
2570 074	23-64-308
2570 075	23-64-308
2570 076	23-64-308
2570 077	23-64-308
2570 086	23-64-308
2570 087	23-64-308
2570 088	23-64-308
2570 089	23-64-308
2570 090	23-63-33
2570 091	23-63-33
2570 092	23-63-33
2570 093	23-63-33
2570 094	23-63-33
2570 095	23-63-33
2570 096	23-63-33
2570 097	23-63-33
2570 098	23-11-30
2570 099	23-11-30
2570 100	23-63-33
2570 101	23-63-33
2570 122	23-09-53
2570 128	23-06-10
2570 135	23-02-19
2570 145	23-33-86
2570 158	23-09-51
2570 159	23-09-51
2570 166	23-09-51
2570 167	23-09-51
2570 172	23-09-51
2570 173	23-09-51
2570 185	19-31-7
2570 188	23-64-254
2570 189	23-64-254
2570 194	23-64-354
2570 195	23-64-354
2570 502	23-64-354
2570 503	23-64-354
2570 525	8-37-178
2570 526	23-33-42
2570 530	23-22-151
2570 532	23-22-145
2570 533	23-22-145
2570 538	23-22-145
2570 539	23-22-145
2570 542	23-19-185
2570 543	23-19-185
2570 548	23-64-308
2570 549	23-64-308
2570 551	23-64-308
2570 558	19-31-2
2570 968	23-64-306
2570 969	23-64-306
2570 971	23-64-306
2570 972	19-14-35
	23-64-306
2570 980	23-63-33
2570 981	23-63-33
2570 994	23-02-18
2571 001	19-31-1
2571 004	23-64-273
2571 005	23-64-273
2571 008	23-63-126
2571 009	23-63-126
2571 010	23-42-13
2571 011	23-42-13
2571 020	23-64-48
2571 021	23-64-48
2571 023	8-37-178
2571 038	23-64-48
2571 039	23-64-48
2571 040	23-36-6
2571 041	23-36-6
2571 057	23-02-19
2571 059	23-33-86
2571 060	23-33-86
2571 061	23-33-86
2571 064	23-33-86
2571 065	23-33-86
2571 067	23-06-49
2571 068	23-33-86
2571 072	23-36-6
2571 073	23-36-6
2571 076	23-64-273
2571 078	23-06-10
2571 080	21-30-58
2571 081	21-30-15
2571 092	23-64-242
2571 099	23-33-42
2571 102	23-33-42
2571 112	23-63-33
2571 113	23-63-33
2571 118	19-31-7
2571 158	23-06-17
2571 164	23-06-17
2571 170	23-63-33
2571 171	23-63-33
2571 172	23-63-33
2571 173	23-63-33
2571 176	23-63-33
2571 177	23-63-33
2571 178	23-63-33
2571 179	23-63-33
2571 180	23-63-33
2571 181	23-63-33
2571 182	23-63-33
2571 183	23-63-33
2571 184	23-63-33
2571 185	23-63-33
2571 186	23-02-18
2571 197	23-06-25
2571 203	23-33-96
2571 214	23-64-235
2571 215	23-64-95
2571 216	23-64-93
2571 224	23-02-50
2571 225	23-19-63
2571 256	8-37-178
2571 258	23-22-145
2571 260	23-33-10
2571 266	23-22-53
2571 267	23-22-53
2571 274	23-33-109
2571 286	23-06-4
2571 287	23-06-4
2571 292	23-26-80
2571 294	23-63-55
2571 295	23-63-55
2571 296	23-63-42
2571 297	23-63-42
2571 308	23-06-17
2571 310	23-63-94
2571 311	23-63-94
2571 330	23-64-71
2571 331	23-64-71
2571 403	19-14-25

MyMopar.com

PART NUMBER	CODE
2571 405. . .	19-14-25
2571 406. .	23-63-131
2571 407. . .	23-63-16
2571 408. . .	23-63-16
2571 409. . .	19-14-35
2571 417. . .	23-31-33
2571 422. .	23-34-110
2571 425. . .	23-06-42
	23-26-76
2571 446. . .	23-42-23
2571 447. . .	23-42-23
2571 448. . .	23-42-23
2571 450. . .	23 36-35
2571 455. . .	23-06-10
2571 460. . .	23-26-41
2571 461. . .	23-26-41
2571 468. . .	23-06-4
2571 469. . .	23-06-8
2571 470. . .	23-63-15
2571 471. . .	23-63-15
2571 474. . .	23-06-4
2571 476. . .	23-63-15
2571 477. . .	23-63-15
2571 478. .	23-34-121
2571 479. .	23-34-121
2571 488. .	23-22-145
2571 489. .	23-22-145
2571 490. .	23-22-145
2571 491. .	23-22-145
2571 502. . .	23-02-43
2571 503. . .	23-02-27
2571 515. .	23-33-132
2571 517. .	23-33-109
2571 518. .	23-33-109
2571 532. .	23-22-145
2571 533. .	23-22-145
2571 534. .	23-22-145
2571 535. .	23-22-145
2571 538. .	23-22-145
2571 539. .	23-22-145
2571 542. . .	23-02-40
2571 543. .	23-64-246
2571 560. .	23-63-127
2571 561. .	23-63-127
2571 562. .	23-64-240
2571 563. .	23-64-240
2571 571. . .	23-31-33
2571 573. . .	23-31-33
2571 578. . .	23-63-15
2571 579. . .	23-63-15
2571 580. . .	23-63-15
2571 581. . .	23-63-15
2571 584. . .	23-63-33
2571 585. . .	23-63-33
2571 594. . .	23-06-53
2571 595. . .	23-31-33
2571 596. . .	23-31-33
2571 597. . .	23-31-33
2571 601. . .	23-02-18
2571 615. . .	23-06-53

PART NUMBER	CODE
2571 621. . .	23-33-96
2571 622. . .	23-33-96
2571 623. . .	23-33-96
2571 624. . .	23-06-53
	23-45-60
2571 627. . .	23-06-25
2571 628. . .	23-06-25
2571 637. . .	23-33-65
2571 647. . .	23-06-9
2571 648. . .	23-06-15
2571 662. .	23-66-235
2571 663. .	23-66-235
2571 670. .	23-63-126
2571 687. . .	23-26-80
2571 693. . .	23-33-86
2571 697. . .	8-37-178
2571 711. . .	23-63-33
2571 712. . .	23-63-33
2571 713. . .	23-63-33
2571 714. . .	23-63-33
2571 728. . .	23-06-53
2571 729. . .	23-06-53
2571 730. . .	23-06-53
2571 733. . .	23-33-12
	23-33-20
2571 740. . .	23-36-4
2571 741. . .	23-36-4
2571 744. . .	23-33-42
2571 746. . .	23-06-4
2571 768. . .	23-59-57
2571 782. . .	23-02-18
2571 784. . . .	1-40-2
2571 785. . . .	1-40-2
2571 786. . . .	1-40-2
2571 787. . . .	1-40-2
2571 793. . . .	1-40-2
2571 794. . . .	1-40-2
2571 802. .	23-22-145
2571 803. .	23-22-145
2571 804. .	23-22-145
2571 805. .	23-22-145
2571 806. .	23-22-145
2571 807. .	23-22-145
2571 809. . .	23-33-53
2571 812. . .	23-06-4
2571 853. .	23-33-109
2571 854. . .	23-33-86
2571 866. .	23-61-118
2571 867. .	23-61-118
2571 890. .	23-33-109
2571 896. . .	23-06-10
2571 897. . .	23-06-10
2571 902. .	23-63-130
2571 908. . .	23-33-86
2571 909. . .	23-33-86
2571 910. . .	23-33-86
2571 914. . .	23-06-22
2571 916. . .	23-33-86
2571 920. .	23-33-109
2571 928. .	23-34-110

PART NUMBER	CODE
2571 931. .	23-33-109
2571 934. .	23-33-109
2571 942. . .	8-37-463
2571 947. . .	23-06-23
2571 948. . .	23-06-4
2571 949. . .	23-06-15
2571 965. . .	23-31-33
2571 966. . .	23-59-56
2571 967. . .	23-59-56
2571 968. . .	23-59-56
2571 969. . .	23-59-56
2571 971. . .	23-06-55
2571 972. . .	23-06-17
2571 973. . .	19-14-35
2571 977. . .	23-33-86
2571 978. . .	23-33-86
2571 979. . .	23-33-86
2571 980. . .	23-33-86
2571 981. . .	23-33-86
2571 982. . .	23-33-86
2571 983. . .	23-33-86
2571 984. . .	23-33-86
2571 985. . .	23-33-86
2571 986. . . .	1-40-3
	23-33-86
2571 987. . . .	1-40-3
	23-33-86
2571 988. . . .	1-40-3
	23-33-86
2571 989. . . .	1-40-3
2571 990. . . .	1-40-3
2571 991. . . .	1-40-3
2571 992. . .	23-33-86
2571 993. . .	23-33-86
2571 994. . .	23-33-86
2572 006. . .	23-02-1
	23-02-62
	23-02-78
2572 023. . .	23-20-29
2572 120. . .	23-20-29
2572 136. . .	23-26-80
2572 163. . .	23-02-82
2572 191. . .	23-58-67
2572 200. . .	23-63-14
2572 201. . .	23-63-14
2572 202. . .	23-63-14
2572 203. . .	23-63-14
2572 204. . .	23-63-20
2572 211. . .	23-63-14
	23-63-20
2572 215. . .	23-63-20
2572 353. . .	23-63-14
2572 357. . .	23-26-80
2572 366. . .	23-26-23
2572 367. . .	23-26-23
2572 368. . .	23-26-46
2572 418. . .	23-26-75
2572 420. . .	23-26-75
2572 430. . .	23-26-76

PART NUMBER	CODE
2572 432. . .	23-26-77
2572 433. . .	23-26-76
2572 444. . .	23-26-47
2572 445. . .	23-26-47
2572 459. . .	23-26-80
2572 462. . .	23-26-23
2572 463. . .	23-26-23
2572 464. . .	23-26-23
2572 465. . .	23-26-23
2572 466. . .	23-36-47
2572 467. . .	23-26-47
2572 468. . .	23-26-47
2572 510. .	23-02-107
2572 517. . .	23-26-87
2572 518. . .	23-38-27
2572 521. . .	8-11-16
2572 525. . .	23-38-27
2572 526. . .	23-38-27
2572 527. . .	23-38-27
2572 539. . . .	8-20-5
2572 551. . .	23-38-27
2572 583. .	23-02-105
2572 590. . . .	8-20-5
2572 592. .	23-02-111
2572 628. . .	23-26-80
2572 668. . .	23-20-14
2572 669. . .	23-20-14
2572 674. . .	23-26-23
2572 675. . .	23-26-23
2572 676. . .	23-26-47
2572 677. . .	23-26-47
2572 683. . .	23-26-80
2572 718. . .	23-26-80
2572 719. . .	23-26-80
2572 729. . .	23-26-80
2572 742. . .	23-26-23
2572 743. . .	23-26-23
2572 744. . .	23-26-23
2572 774. . .	8-11-15
2572 775. . .	8-11-12
2572 776. . .	8-11-16
2572 798. . .	23-02-2
	23-02-68
2572 817. . .	23-26-87
2572 824. . .	23-26-23
2572 825. . .	23-26-23
2572 830. . .	23-26-23
2572 831. . .	23-26-23
2572 848. . .	23-26-23
2572 849. . .	23-26-23
2572 852. . .	23-26-46
2572 853. . .	23-26-46
2572 854. . .	23-26-46
2572 855. . .	23-26-46
2572 884. . .	23-26-23
2572 885. . .	23-26-23
2572 886. . .	23-26-23
2572 887. . .	23-26-23
2572 889. . .	23-58-67

PART NUMBER	CODE
2572 892. . .	23-08-12
2572 893. . .	23-08-12
2572 895. . .	23-38-27
2572 910. . .	23-20-14
2572 911. . .	23-20-14
2572 931. . .	23-38-40
2572 934. . .	23-26-47
2572 935. . .	23-26-47
2572 945. . .	23-26-80
2572 962. . .	23-26-6
2572 964. . .	23-26-23
2572 965. . .	23-26-23
2572 968. . .	23-26-26
2572 982. . .	23-26-46
2572 983. . .	23-26-46
2573 099. . .	23-58-75
2573 114. . .	23-09-75
2573 115. . .	23-09-75
2573 178. . .	23-51-42
2573 179. . .	23-51-42
2573 181. . . .	1-67-3
2573 182. .	23-64-290
2573 188. . .	23-26-14
2573 189. . .	23-26-14
2573 208. . .	23-40-96
2573 209. . .	23-40-96
2573 218. . .	23-40-96
2573 219. . .	23-40-96
2573 559, , ,	1-67-3
2573 564. . .	23-64-68
2573 565. . .	23-64-68
2573 566. . .	23-64-68
2573 567. . .	23-64-68
2573 572. . .	23-22-53
2573 573. . .	23-22-53
2573 606. .	23-34-187
2573 657. .	23-58-555
2573 658. .	23-58-555
2573 663. .	23-58-220
2573 664. . .	23-63-55
2573 665. . .	23-63-55
2573 690. .	23-58-213
2573 694. .	23-58-486
2573 695. .	23-58-486
2573 696. . .	23-38-27
2573 697. . .	23-38-27
2573 698. . .	23-38-27
2573 767. .	23-58-200
2573 776. .	23-64-202
2573 777. .	23-64-202
2573 791. . .	23-23-27
2573 792. . .	23-22-53
2573 793. . .	23-22-53
2573 806. . .	23-22-53
2573 807. . .	23-22-53
2573 837. .	23-58-399
2573 838. .	23-58-357
2573 839. .	23-58-388
2573 840. .	23-58-381
2573 844. .	23-58-396

MyMopar.com

PART NUMBER	CODE
2573 847	23-58-400
2573 873	23-48-99
2573 876	23-22-53
2573 877	23-22-53
2573 951	23-63-37
2574 014	23-63-112
2574 017	23-63-112
2574 020	23-34-176
2574 021	23-34-176
2574 025	13-66-116
	23-54-27
2574 033	23-58-570
2574 040	23-63-112
2574 042	23-63-21
2574 043	23-63-21
2574 168	23-63-61
2574 169	23-63-61
2574 185	4-23-2
2574 190	23-54-118
2574 196	23-34-137
	23-58-496
2574 197	23-34-137
	23-58-496
2574 239	23-34-213
2574 322	23-48-93
2574 690	23-58-76
2574 691	23-58-76
2474 704	23-26-41
2574 705	23-26-41
2574 828	23-42-46
2574 843	23-58-67
2574 912	23-48-93
2574 994	23-42-46
2574 998	23-19-177
2574 999	23-19-177
2575 038	8-57-10
2575 042	8-57-56
2575 064	8-50-303
2575 065	8-50-303
2575 088	8-50-303
2575 089	8-50-303
2575 090	8-14-9
2575 093	8-14-6
2575 109	23-34-283
2575 188	8-55-7
2575 189	8-55-7
2575 238	8-55-7
2575 239	8-55-7
2575 550	23-64-308
2575 836	8-55-140
2575 837	8-55-140
2576 007	23-54-3
2576 008	23-54-3
2576 018	23-34-293
2576 038	23-11-1
2576 039	23-11-1
2576 042	23-11-1
2576 043	23-11-1
2576 050	23-19-74
2576 060	23-11-1
2576 061	23-11-1
2576 062	23-11-1
2576 063	23-11-1
2576 064	23-11-1
2576 065	23-11-1
2576 077	23-34-167
2576 095	13-11-5
2576 100	23-11-3
2576 101	23-11-3
2576 114	23-19-82
2576 115	23-19-82
2576 133	23-64-66
2576 142	7-16-63
2576 150	26-33-109
2576 160	23-19-8
2576 174	23-40-92
2576 175	23-40-92
2576 178	23-34-167
2576 549	13-01-1
2576 814	23-54-3
2576 815	23-54-3
2576 816	23-54-3
2576 817	23-54-3
2577 111	23-26-35
2577 156	23-26-74
2577 161	1-87-23
2577 247	23-26-74
2577 280	1-87-23
2577 286	1-87-21
2577 306	1-87-30
2577 349	23-45-192
2577 405	23-45-52
2577 584	23-45-187
2577 994	23-45-30
2578 052	12-02-6
2578 053	12-02-6
2578 554	7-26-9
2578 574	7-08-7
2578 597	7-08-2
2578 599	7-08-2
2578 604	12-07-1
2578 605	12-07-1
2578 612	8-34-95
2578 613	8-34-95
2578 616	8-34-95
2578 617	8-34-95
2578 626	15-11-46
2578 703	7-16-47
2578 740	8-14-13
2578 741	7-33-1
2578 750	7-33-1
2578 751	7-33-1
2578 768	7-17-10
2578 820	7-16-82
	23-36-30
2578 826	8-34-176
2578 827	8-34-176
2578 850	7-33-22
2578 851	7-33-22
2578 856	12-06-3
2579 091	12-07-1
2579 094	12-07-1
2579 443	12-15-21
2579 445	7-16-23
2579 446	7-16-23
2579 447	7-16-23
2579 753	7-26-9
2579 754	7-26-9
2580 040	8-15-4
2580 041	8-15-4
2580 044	23-67-164
2580 061	8-16-4
2580 064	8-16-16
2580 065	8-16-16
2580 072	21-30-28
2580 085	24-24-159
2580 089	8-15-4
2580 099	1-47-9
	23-54-170
2580 100	23-58-543
2580 102	1-87-22
2580 105	8-19-81
2580 114	23-67-163
2580 115	14-02-32
2580 119	1-87-22
2580 123	8-35-61
2580 124	8-37-70
2580 138	8-15-52
2580 139	8-40-5
2580 140	8-15-52
2580 142	14-02-15
2580 146	8-05-20
	8-53-294
2580 148	8-17-30
2580 149	8-05-16
	8-53-296
2580 150	8-05-16
	8-53-296
2580 151	1-21-1
2580 155	8-55-57
2580 156	14-02-8
	23-54-170
	23-54-543
2580 157	23-67-166
2580 159	8-05-16
	8-53-296
2580 163	8-50-156
2580 179	8-37-127
2580 190	23-67-160
2580 192	24-24-124
2580 193	8-31-8
2580 200	23-67-132
2580 209	8-58-60
2580 211	23-67-79
2580 212	23-67-79
2580 213	23-67-31
2580 226	8-50-129
2580 227	8-50-129
2580 242	8-37-155
2580 250	1-48-374
	24-24-39
2580 251	1-48-374
2580 253	1-47-8
	1-87-180
	24-24-20
2580 255	8-19-3
2580 256	21-30-15
2580 263	8-19-15
2580 267	8-16-16
2580 270	8-15-7
2580 284	8-42-25
2580 285	8-42-25
2580 286	8-37-15
2580 287	8-37-15
2580 291	8-15-4
2580 300	1-48-23
2580 311	21-30-23
2580 325	8-19-87
2580 327	1-21-1
2580 332	8-31-5
2580 335	23-58-189
2580 347	1-87-22
2580 348	1-47-9
	24-24-140
2580 352	24-24-170
2580 353	1-48-12
2580 356	1-87-58
2580 357	1-87-58
2580 358	1-87-58
2580 360	1-47-15
	24-28-358
2580 361	1-87-292
2580 364	1-87-2
2580 366	1-87-2
2580 367	1-87-2
2580 368	1-87-2
2580 374	8-57-79
2580 383	14-02-8
2580 384	14-02-8
2580 385	14-02-3
2580 388	8-15-27
2580 386	14-02-67
2580 389	8-15-27
2580 394	14-02-4
2580 401	1-88-6
2580 402	1-88-6
2580 403	1-88-6
2580 404	1-88-170
2580 405	1-88-30
2580 406	1-88-107
2580 407	1-88-120
2580 408	1-82-2
2580 409	1-82-2
2580 415	23-67-25
2580 416	23-67-25
2580 417	23-67-25
2580 418	23-67-25
2580 419	23-67-25
2580 420	23-67-5
2580 421	23-67-5
2580 422	23-67-5
2580 424	23-67-5
2580 425	23-67-5
2580 426	23-67-5
2580 427	23-67-5
2580 428	23-67-5
2580 429	23-67-5
2580 441	23-67-5
2580 443	23-67-5
2580 453	8-20-9
2580 461	8-31-2
2580 462	14-02-2
2580 465	8-21-1
2580 469	8-52-357
2580 470	8-01-17
2580 479	8-37-15
2580 480	8-37-16
2580 488	1-48-7
2580 493	8-37-90
2580 498	8-15-35
2580 550	14-02-3
2580 552	14-02-4
2580 555	14-02-18
2580 557	14-02-77
2580 562	14-02-8
2580 607	1-88-1
2580 611	1-13-10
	8-13-2
2580 613	23-41-170
2580 614	23-41-170
2580 615	23-41-184
2580 616	23-41-184
2580 619	8-58-79
2580 620	8-58-79
2580 622	1-88-159
2580 631	1-88-162
2580 632	1-88-162
2580 640	1-88-159
2580 643	23-67-86
2580 644	23-67-86
2580 645	23-67-86
2580 647	23-67-50
	23-67-95
2580 648	23-67-86
2580 649	23-67-86
2580 694	8-15-4
2580 697	1-48-867
2580 699	24-24-159
2580 702	1-87-22
2580 703	1-87-180
2580 779	1-87-2
2580 854	14-02-34
2580 857	24-24-124

MyMopar.com

PART NUMBER	CODE
2580 858. . . .	8-15-4
2580 859. . . .	8-15-4
2580 861. . .	24-01-65
2580 863. . .	1-48-941
2580 864. . .	1-48-941
	24-01-65
2580 868. . . .	1-87-1
2580 870. . . .	1-87-1
2580 872. . . .	1-87-1
2580 874. . . .	1-87-1
2580 876. . . .	1-87-1
2580 877. . . .	1-87-1
2580 878. . . .	1-87-1
2580 879. . . .	1-87-1
2580 880. . . .	1-87-1
2580 882. . .	21-30-30
2580 885. . .	21-84-1
2580 886. . .	21-84-1
2580 889. . .	8-37-371
2580 890. . .	8-37-371
2580 891. . .	21-30-23
2580 892. . .	21-30-21
2580 894. . .	23-33-10
2580 895. . .	21-30-49
2580 900. . . .	1-09-1
2580 901. . . .	1-09-1
2580 902. . . .	1-09-1
2580 903. . .	8-50-126
2580 905. . .	8-50-132
2580 912. . .	8-50-126
2580 914. . .	8-50-129
2580 929. . .	23-67-82
2580 940. .	23-41-186
2580 944. . .	23-67-82
2580 952. . .	8-17-30
2580 953. . .	8-17-30
	23-47-423
2580 954. . .	8-17-30
2580 965. . .	8-32-15
2580 997. .	23-18-124
2580 998. . .	8-58-60
2581 027. . .	8-11-12
2581 028. . .	8-11-16
2581 029. . .	8-11-15
2581 074. . .	23-40-82
2581 100. . .	23-26-77
2581 101. . .	23-26-77
2581 160. . .	23-17-5
2581 212. . .	21-30-21
2581 236. . .	24-28-8
2581 243. . .	23-38-30
2581 256. . .	23-26-85
2581 275. . .	8-05-34
2581 279. . .	23-20-29
2581 280. . .	23-20-29
2581 283. . .	23-20-29
2581 284. . .	23-20-29
2581 286. . .	23-26-47

PART NUMBER	CODE
2581 287. . .	23-26-47
2581 322. . .	23-40-82
2581 323. . .	23-40-82
2581 324. . .	23-40-82
2581 350. .	23-41-179
2581 364. . .	8-11-16
2581 382. . .	23-02-85
2581 383. . .	23-02-85
2581 442. . .	23-26-45
2581 443. . .	23-26-45
2581 446. . .	21-30-15
2581 472. . .	23-20-19
2581 473. . .	23-20-19
2581 591. . .	23-20-29
2581 593. . .	23-20-29
2581 630. . .	23-63-14
2581 631. . .	23-63-14
2581 632. . .	23-63-14
2581 633. . .	23-63-14
2581 709. . .	8-11-15
2581 722. .	23-02-110
2581 734. . .	23-26-47
2581 735. . .	23-26-47
2581 742. . .	23-26-55
2581 743. . .	23-26-55
2581 780. . .	23-40-82
2581 812. . .	23-20-24
2581 813. . .	23-20-24
2581 832. . .	23-40-82
2581 862. .	23-02-105
2581 878. . .	23-26-56
2581 879. . .	23-26-56
2581 880. . .	23-26-47
2581 881. . .	23-26-47
2581 916. . .	23-20-29
2583 129. . .	23-54-6
2583 155. . .	23-18-27
2583 158. . .	23-17-5
2583 159. . .	23-17-5
2583 160. . .	23-17-5
2583 161. . .	23-17-5
2583 162. . .	23-17-5
2583 163. . .	23-17-5
2583 164. . .	23-17-5
2583 165. . .	23-17-24
2583 166. . .	23-17-72
2583 167. . .	23-06-28
2583 174. . .	23-17-5
2583 178. . .	23-41-37
	23-41-286
2583 180. . .	23-18-5
2583 181. . .	23-18-5
2583 195. . .	15-11-10
2583 203. . .	23-48-19
2583 204. . .	23-47-6
2583 205. . .	23-47-6
2583 206. . .	15-11-3
2583 214. . .	23-14-24

PART NUMBER	CODE
2583 220. . .	23-48-93
2583 235. . .	15-11-5
2583 236. . .	15-19-48
2583 239. .	23-48-111
2583 240. .	23-48-202
2583 253. . .	15-11-34
2583 279. . . .	1-67-1
2583 290. . .	23-19-9
2583 406. . .	23-47-6
2583 407. . .	23-47-6
2583 501. .	23-54-218
2583 506. .	23-54-214
2583 508. .	23-54-221
2583 509. .	23-54-222
2583 510. .	23-54-220
2583 535. . .	23-54-27
2583 536. . .	23-54-14
2583 571. . . .	1-67-1
2583 573. . .	23-19-33
2583 576. . .	23-19-35
2583 577. . .	23-19-35
2583 610. .	23-41-113
2583 641. . .	1-67-19
	23-49-9
2583 856. .	23-41-106
2583 976. . .	23-18-21
2583 977. . .	23-18-21
2584 518. . .	1-67-18
2584 539. . .	23-54-67
2584 840. .	23-54-160
2584 841. . . .	8-16-1
2584 842. . . .	8-16-1
2584 843. . . .	8-16-1
2584 844. . .	8-27-279
2584 850. . . .	8-55-1
2584 851. . . .	8-55-1
2584 852. . . .	8-55-1
2584 853. . . .	8-55-1
2584 854. . .	8-50-186
2584 855. . . .	8-56-8
2584 856. . . .	8-56-8
2584 857. . .	8-55-194
2584 858. . .	8-55-194
2584 861. . .	8-55-194
2584 862. . . .	8-55-1
2584 863. . . .	8-55-1
2584 864. . .	8-55-194
2584 865. . .	8-55-194
2584 866. . . .	8-56-8
2584 869. . .	8-55-194
2584 870. . .	8-55-194
2584 871. . . .	8-55-1
2584 872. . . .	8-55-1
2584 875. . .	8-55-194
2584 876. . .	8-55-194
2584 879. . . .	8-55-1
2584 880. . . .	8-55-1
2584 883. . .	8-55-194
2584 884. . .	8-55-194
2584 885. . .	8-55-194

PART NUMBER	CODE
2584 886. . . .	8-55-1
2584 887. . .	8-55-158
2584 888. . . .	8-55-1
2584 895. . .	1-87-61
2584 896. .	24-28-300
2584 912. . .	24-01-1
2584 913. . .	24-01-1
2584 914. . .	24-01-1
2584 915. . .	24-01-1
2584 917. . .	24-01-1
2584 918. . .	24-01-1
2584 919. . .	24-01-1
2584 920. . .	24-01-1
2584 922. . . .	8-15-3
2584 923. .	24-28-300
2584 926. . .	8-05-14
	8-53-270
2584 927. . .	8-05-14
	8-53-270
2584 928. . .	8-05-14
	8-53-270
2584 929. . .	8-05-14
	8-53-270
2584 946. . .	14-72-1
2584 947. . .	14-72-1
2584 948. . .	14-72-1
2584 949. . .	14-72-1
2584 953. . . .	8-16-1
2584 954. . . .	8-16-1
	23-41-176
2584 957. . .	8-50-175
2584 958. . .	8-50-175
2584 959. . .	8-50-175
2584 960. . .	8-50-175
2584 961. . .	8-50-170
2584 962. . .	8-50-170
2584 964. . . .	8-42-5
2584 965. . . .	8-36-1
2584 971. . .	8-50-156
2584 972. . . .	8-13-5
	8-50-354
	8-55-63
	8-56-27
	8-57-89
2584 975. . .	23-67-98
2584 976. . .	23-67-10
2584 977. .	23-67-164
2584 978. . .	23-67-10
2584 979. .	23-67-164
2584 980. . .	23-67-16
2584 983. . .	24-01-1
2584 984. . .	24-01-1
2584 985. . .	24-01-1
2584 986. . .	24-01-1
2584 987. . .	24-01-1
2584 988. . .	24-01-1
2584 989. . .	24-01-1
2584 990. . .	24-01-1
2584 991. . .	8-27-250

PART NUMBER	CODE
2584 992. . .	8-27-292
2584 993. . .	8-27-138
2584 994. . .	8-27-292
2584 995. . .	8-27-250
2584 996. . .	8-27-205
2585 000. . .	8-27-71
2585 001. . .	24-01-1
2585 002. . .	24-01-1
2585 003. . .	24-01-1
2585 016. . .	8-27-250
2585 019. . .	8-27-205
2585 020. . .	8-27-306
2585 021. . .	8-27-133
2585 022. . .	8-27-137
2585 025. . .	23-67-16
2585 030. . . .	8-16-1
2585 042. .	23-67-119
2585 043. . .	23-67-10
2585 045. . .	23-67-16
2585 105. . .	24-28-70
2585 110. . .	8-53-327
2585 118. . .	14-73-1
2585 119. . . .	8-55-1
2585 120. . . .	8-55-1
2585 140. . . .	8-15-4
2585 144. . .	8-27-279
2585 150. . . .	8-55-7
2585 151. . . .	8-55-7
2585 152. . .	8-50-175
2585 153. . .	8-50-175
2585 162. . .	8-27-138
2585 175. . .	8-29-97
2585 200. . . .	9-01-5
2585 201. . . .	9-39-1
2585 202. . . .	9-01-5
2585 203. . . .	9-39-1
2585 204. . . .	9-01-5
2585 205. . . .	9-39-1
2585 206. . . .	9-01-5
2585 207. . . .	9-39-1
2585 208. . . .	9-01-5
2585 209. . . .	9-39-1
2585 224. . .	21-118-6
2585 225. . .	17-11-3
2585 226. . .	17-11-3
2585 227. . .	17-11-3
2585 229. . .	17-11-3
2585 230. . .	17-11-3
2585 231. . .	17-11-3
2585 232. . .	17-11-3
2585 233. . .	17-11-3
2585 234. . .	17-11-3
2585 235. . .	17-11-3
2585 236. . .	17-11-3
2585 237. . .	17-11-3
2585 238. . .	17-11-3
2585 239. . .	17-11-3
2585 240. . .	17-11-3
2585 241. . .	17-11-3

MyMopar.com

PART NUMBER	CODE
2585 242	17-11-3
2585 243	17-12-4
2585 244	17-12-4
2585 245	17-12-4
2585 246	17-12-4
2585 247	17-12-4
2585 248	17-12-4
2585 249	17-12-4
2585 250	17-12-4
2585 251	17-11-3
2585 252	17-11-3
2585 253	17-11-3
2585 254	17-11-3
2585 255	17-11-3
2585 256	17-11-3
2585 257	17-11-3
2585 262	17-16-1
2585 263	17-16-1
2585 264	17-16-1
2585 265	17-16-1
2585 267	9-34-5
2585 268	9-34-5
2585 269	9-34-5
2585 270	9-34-5
2585 271	9-34-5
2585 272	9-34-5
2585 273	9-34-5
2585 274	9-34-5
2585 292	21-138-2
2585 296	5-39-1
2585 314	7-43-1
2585 332	2-10-55
2585 333	2-10-55
2585 334	19-15-23
2585 335	19-15-23
2585 354	17-11-3
2585 358	11-10-2
2585 375	7-02-1
2585 376	7-02-1
2585 384	7-42-1
2585 385	7-42-1
2585 386	14-86-35
2585 387	14-86-35
2585 392	17-11-3
2585 396	5-03-3
2585 399	17-11-3
2585 400	14-43-5
2585 401	14-30-4
2585 402	14-30-7
2585 403	14-30-4
2585 405	14-30-4
2585 406	14-35-1
2585 408	14-35-1
2585 409	14-30-4
2585 410	14-35-1
2585 415	14-39-7
2585 416	14-39-7
2585 417	14-43-5
2585 418	14-39-7
2585 419	14-43-5
2585 420	14-43-5
2585 422	14-43-5
2585 423	14-39-7
2585 424	14-39-7
2585 425	14-30-4
2585 426	14-30-4
2585 427	14-30-4
2585 428	14-35-1
2585 429	14-39-7
2585 430	14-30-4
2585 439	14-35-1
2585 440	14-30-4
2585 441	14-41-3
2585 442	14-35-1
2585 444	14-30-7
2585 446	14-35-1
2585 448	14-30-4
2585 450	14-43-5
2585 451	14-41-3
2585 452	14-35-6
2585 453	14-30-7
2585 454	14-30-4
2585 455	14-30-4
2585 456	14-35-6
2585 457	14-43-5
2585 459	14-35-1
2585 460	14-43-5
2585 462	14-30-4
2585 463	14-30-7
2585 464	14-35-39
2585 465	14-35-39
2585 466	14-35-39
2585 467	14-35-6
2585 468	14-34-15
2585 471	14-35-9
2585 472	14-34-17
2585 473	14-30-7
2585 494	14-30-4
2585 495	14-30-7
2585 496	14-30-4
2585 498	14-30-4
2585 500	2-07-1
2585 501	2-07-1
2585 502	5-03-3
2585 503	5-100-2
2585 505	5-03-3
2585 506	5-03-3
2585 507	5-03-3
2585 508	5-03-3
2585 509	5-03-3
2585 510	5-03-3
2585 511	5-03-3
2585 513	5-03-3
2585 539	5-100-1
2585 543	21-01-3
2585 545	5-100-20
2585 549	5-100-1
2585 557	5-63-1
2585 558	5-63-3
2585 559	17-29-6
2585 560	9-01-5
2585 561	9-39-1
2585 565	21-30-6
2585 577	9-34-5
2585 578	9-34-5
2585 579	9-34-5
2585 580	9-34-5
2585 581	17-11-3
2585 582	17-11-3
2585 583	17-11-3
2585 589	21-138-2
2585 590	5-03-3
2585 593	2-10-55
2585 594	2-10-55
2585 603	5-39-1
2585 621	17-11-3
2585 622	17-11-3
2585 623	17-23-3
2585 681	5-03-3
2585 700	14-35-8
2585 781	14-39-7
2585 799	14-35-6
2585 801	1-67-18
2585 802	1-67-18
2585 803	1-67-18
2585 804	1-67-18
2585 805	1-67-18
2585 806	1-67-18
2585 807	1-67-18
2585 808	1-67-18
2585 810	1-67-18
2585 811	1-67-18
2585 813	1-67-18
2585 814	1-67-18
2585 815	1-67-18
2585 816	1-67-18
2585 817	1-67-18
2585 818	1-67-18
2585 819	1-67-18
2585 820	1-67-18
2585 821	1-67-18
2585 823	1-67-18
2585 824	1-67-18
2585 825	1-67-18
2585 826	1-67-18
2585 827	1-67-18
2585 828	1-67-18
2585 829	1-67-18
2585 844	1-19-5 23-06-28
2585 916	24-01-1
2586 049	1-67-20
2586 298	5-05-9
2586 409	23-14-18 23-14-79
2586 512	8-29-99
2586 572	8-27-279
2586 577	8-27-77
2586 603	23-41-34
2586 604	14-02-4
2586 616	24-01-1
2586 713	24-01-1
2586 715	24-01-1
2586 716	24-01-1
2586 756	8-15-2
2586 757	8-55-198
2586 764	8-53-304
2586 952	8-15-2
2586 981	14-02-30
2587 067	23-33-10
2587 069	1-48-867
2587 074	1-14-4
2587 075	1-14-4
2587 076	1-14-4
2587 077	1-14-4
2587 084	21-30-30
2587 085	8-19-3
2587 096	23-33-86
2587 097	23-33-86
2587 113	23-06-53
2587 122	23-33-132
2587 128	23-06-4
2587 131	8-15-2
2587 132	8-15-24
2587 139	23-06-53
2587 162	24-24-124
2587 169	8-37-99
2587 171	8-15-2
2587 174	8-15-27
2587 176	21-30-58
2587 178	8-01-17
2587 183	21-84-1
2587 190	8-37-458
2587 245	8-37-90
2587 247	8-37-90
2587 248	8-37-90
2587 249	8-37-178
2587 258	8-37-90
2587 259	8-37-178
2587 266	1-40-2
2587 267	1-40-2
2587 269	1-40-2
2587 270	1-40-2
2587 272	1-40-2
2587 273	1-40-2
2587 275	23-06-10
2587 339	14-02-1
2587 350	14-02-30
2587 364	14-02-11
2587 365	14-02-76
2587 439	1-48-941
2587 441	1-48-941
2587 450	1-48-941 24-01-65
2587 459	14-02-29
2587 467	1-48-374 24-24-39
2587 470	1-48-12
2587 471	1-48-12
2587 472	1-48-12
2587 473	24-24-164
2587 474	24-24-164
2587 475	24-24-164
2587 476	24-24-164
2587 477	24-24-164
2587 491	8-53-301
2587 493	8-53-296
2587 494	8-53-274
2587 495	21-30-28
2587 500	1-87-404
2587 502	23-54-169 23-58-534
2587 506	1-12-1
2587 507	8-53-270
2587 532	1-48-7
2587 559	8-53-303
2587 564	24-24-150
2587 577	1-48-374
2587 600	1-10-1
2587 601	1-10-1
2587 603	1-10-1
2587 604	1-10-1
2587 605	1-10-1
2587 606	1-10-1
2587 608	1-10-1
2587 609	1-10-1
2587 615	8-56-2
2587 617	23-18-103
2587 618	23-18-124
2587 619	23-18-124
2587 690	1-88-170
2587 699	23-67-86
2587 796	8-15-2
2587 797	8-15-2
2587 798	8-15-2
2587 802	8-37-162
2587 803	8-37-162
2587 804	8-37-178
2587 807	21-30-19
2587 817	8-01-17
2587 820	8-01-17
2587 822	8-01-17
2587 832	8-37-90
2587 833	8-37-178
2587 861	23-41-55
2587 981	23-33-86
2587 982	23-33-86
2588 006	23-06-17
2588 007	23-33-132
2588 012	23-26-41
2588 013	23-26-41
2588 023	23-31-33
2588 024	23-31-33

MyMopar.com

PART NUMBER	CODE
2588 025.	23-31-33
2588 026.	23-31-33
2588 054.	13-66-106
2588 055.	23-64-12
2588 118.	23-40-92
2588 119.	23-40-92
2588 120.	23-64-67
2588 121.	23-64-67
2588 146.	23-66-67
2588 147.	23-66-67
2588 148.	23-36-36
2588 152.	23-67-46
2588 202.	23-64-293
2588 226.	23-39-19
2588 227.	23-39-19
2588 270.	23-39-48
	23-41-19
2588 409.	23-64-12
2588 471.	23-36-30
2588 628.	23-59-60
2588 629.	23-59-60
2588 630.	23-59-60
2588 631.	23-59-60
2588 938.	23-63-33
2588 939.	23-63-33
2588 940.	23-63-33
2588 941.	23-63-33
2588 942.	23-63-33
2588 943.	23-63-33
2588 944.	23-63-33
2588 945.	23-63-33
2589 000.	23-14-51
2589 001.	23-14-51
2589 016.	23-26-23
2589 017.	23-26-46
2589 046.	23-26-80
2589 096.	23-21-8
2589 097.	8-05-10
2589 746.	23-26-23
2589 747.	23-26-23
2589 748.	23-26-47
2589 749.	23-26-47
2589 750.	23-26-47
2589 751.	23-26-47
2589 752.	23-26-47
2589 753.	23-26-47
2589 772.	23-26-6
2602 043.	23-23-63
2602 106.	23-63-105
2602 107.	23-63-105
2602 111.	23-39-48
2602 112.	23-39-48
2602 113.	23-39-48
2602 114.	23-39-48
2602 115.	23-39-48
2602 118.	23-19-177
2602 119.	23-19-177
2602 124.	23-58-78
2602 126.	23-58-78
2602 127.	23-58-79
2602 130.	23-54-140
2602 312.	23-63-20
2602 322.	23-64-299
2602 323.	23-64-299
2602 448.	23-09-9
2602 449.	23-09-9
2602 459.	8-55-23
2602 464.	23-58-569
2602 616.	23-23-27
2602 623.	23-23-27
2602 678.	23-63-37
2602 739.	23-51-48
2602 765.	23-58-436
2602 820.	23-41-255
2602 821.	23-41-255
2602 886.	23-19-124
2602 887.	23-23-27
2602 924.	23-58-571
2603 064.	23-09-9
2603 290.	23-34-213
2603 296.	23-63-100
2603 326.	23-34-280
2603 327.	23-34-280
2603 352.	23-26-41
2603 353.	23-36-41
2603 436.	23-48-99
2603 437.	23-48-99
2603 574.	13-66-106
2603 804.	8-55-23
2603 805.	8-55-23
2603 887.	23-34-232
2605 036.	12-15-32
	23-54-2
	23-34-329
2605 049.	23-63-112
2605 052.	23-63-112
2605 053.	23-63-112
2605 056.	23-63-112
2605 422.	23-22-86
2605 423.	23-22-86
2605 882.	23-63-112
2605 887.	23-59-59
2609 006.	1-87-23
2609 345.	23-26-84
2609 357.	23-45-29
2631 001.	8-01-17
2631 046.	8-58-60
2631 047.	8-58-60
2631 048.	8-58-60
2631 061.	23-33-86
2631 078.	23-18-103
2631 079.	23-18-103
2631 135.	8-15-4
2631 138.	8-15-4
2631 139.	8-15-4
2631 145.	23-33-109
2631 147.	23-33-109
2631 151.	8-37-178
2631 164.	8-19-3
2631 170.	8-55-57
2631 305.	8-50-218
2631 320.	8-15-2
2631 326.	23-67-166
2631 329.	19-14-35
2631 331.	19-14-25
	19-14-35
2631 333.	19-14-35
2631 340.	8-16-8
2631 383.	8-50-82
2631 401.	8-19-3
2631 415.	8-56-2
2631 454.	8-15-27
2631 469.	23-06-53
2631 508.	1-48-942
	24-24-156
2631 772.	1-88-20
2631 773.	1-88-107
2631 774.	1-88-120
2631 871.	8-37-504
2631 872.	23-06-11
2631 874.	8-15-53
2631 948.	8-19-3
2631 961.	23-06-53
2635 220.	1-40-8
2642 007.	8-36-114
2642 010.	8-27-250
2643 120.	3-19-1
2643 500.	11-05-1
2643 536.	11-10-3
2643 598.	11-09-3
2643 599.	11-09-3
2643 627.	19-15-4
2643 649.	21-30-43
2643 655.	21-30-21
2643 657.	21-30-389
2643 658.	21-30-2
2643 677.	19-14-94
2643 678.	19-15-4
2643 679.	19-14-47
2643 680.	19-14-22
2643 681.	19-14-11
2643 682.	19-14-83
2643 683.	19-14-96
2643 684.	8-33-118
2643 685.	19-15-4
2643 687.	8-33-118
2643 688.	19-15-4
2643 690.	8-33-118
2643 691.	19-15-4
2643 699.	19-15-4
2643 807.	14-86-1
2643 812.	5-57-2
2643 813.	5-57-2
2643 818.	5-05-38
2643 820.	5-62-1
2643 958.	14-86-40
2643 974.	5-54-4
2656 086.	23-20-32
2656 468.	23-63-136
2656 469.	23-63-136
2656 520.	23-26-35
2657 268.	23-26-47
2657 269.	23-26-47
2657 665.	23-26-76
2658 251.	9-39-12
2658 252.	9-39-9
2658 286.	14-14-20
2658 307.	14-06-10
2658 320.	9-03-5
2658 352.	7-03-1
2658 354.	7-03-1
2658 356.	7-03-1
2658 358.	7-03-1
2658 379.	7-03-1
2658 391.	7-03-1
2658 400.	14-25-11
2658 756.	14-06-10
2658 757.	14-06-10
2658 758.	7-04-17
	24-25-31
2658 759.	7-04-17
2658 790.	7-03-1
2658 792.	7-03-1
2658 793.	7-03-1
2658 882.	9-03-11
2658 984.	7-02-1
2660 217.	8-50-114
2660 218.	8-50-114
2660 219.	8-50-114
2660 246.	21-30-370
2660 289.	5-03-5
2660 292.	5-05-1
2660 293.	5-05-1
2660 296.	5-05-3
2660 297.	5-05-3
2660 298.	5-05-34
2660 429.	11-09-3
2660 433.	11-01-1
2660 434.	11-01-1
2660 445.	11-01-1
2660 538.	11-05-4
2660 539.	11-05-4
2660 541.	11-01-1
2660 543.	11-09-3
2660 546.	11-05-1
2660 548.	11-01-1
2660 580.	16-02-1
2660 584.	16-02-1
2660 588.	16-02-1
2660 589.	16-02-1
2660 590.	16-02-1
2660 669.	16-14-1
2660 760.	5-100-195
2660 761.	5-100-166
2660 762.	5-100-34
2660 763.	5-100-91
2660 764.	5-100-15
2660 765.	5-100-16
2660 766.	5-100-170
2660 767.	5-100-189
2660 768.	5-100-189
2660 769.	5-100-20
2660 770.	5-100-34
2660 771.	5-100-4
2660 772.	5-100-91
2660 773.	5-100-20
2660 774.	5-100-161
2660 775.	5-105-1
2660 776.	5-100-62
2660 777.	5-100-200
2660 783.	5-39-21
2660 786.	5-39-3
2660 791.	5-39-3
2660 871.	5-62-1
2661 091.	23-06-22
2661 118.	23-18-104
2661 167.	8-56-2
2661 292.	14-02-30
2661 456.	21-84-1
2661 554.	23-33-65
2661 564.	1-87-1
2661 572.	23-18-126
2661 578.	23-06-35
2661 580.	1-19-1
2661 676.	23-33-86
2661 687.	1-87-1
2661 689.	1-87-1
2661 780.	23-33-86
2661 812.	23-06-49
2661 847.	23-33-132
2661 932.	23-18-105
2661 992.	24-24-39
2664 126.	23-32-107
2664 127.	23-32-107
2664 238.	23-22-145
2664 239.	23-22-145
2664 252.	23-54-82
2664 271.	23-64-71
2664 276.	23-42-16
2664 330.	23-34-123
2664 540.	23-63-28
2664 568.	23-66-235
2664 569.	23-66-235
2765 086.	23-48-201
2765 087.	23-48-201
2765 089.	23-48-202
2765 116.	23-18-21
2765 117.	23-18-21
2765 120.	23-18-20
2765 121.	23-18-20
2765 318.	23-54-144
2765 393.	23-32-51
	23-48-93
2765 399.	23-54-213
2768 024.	5-03-23
2768 037.	5-05-17
2768 111.	19-30-44
2768 150.	6-14-1
2768 204.	19-15-4
2768 205.	19-15-4

MyMopar.com

PART NUMBER	CODE
2768 206.	19-15-43
2768 217.	19-15-4
2768 218.	19-15-4
2768 219.	19-15-4
2768 220.	19-15-4
2768 252.	19-46-22
2768 254.	19-46-55
2768 255.	19-15-111
2768 287.	14-15-20
	19-15-20
2769 015.	23-19-8
2769 021.	23-32-107
2770 211.	23-18-106
2770 361.	14-02-3
2771 660.	23-06-22
2780 899.	14-07-1
2781 011.	5-05-10
2781 015.	5-05-32
2781 018.	5-05-2
2781 019.	5-67-1
2781 104.	6-27-6
2781 250.	11-01-1
2781 251.	11-01-1
2781 254.	11-10-3
2781 255.	11-10-3
2781 258.	11-09-3
2781 259.	11-09-3
2781 260.	11-09-3
2781 539.	5-05-16
2781 632.	5-05-1
2781 633.	5-05-1
2781 876.	6-52-1
2782 546.	23-34-27
2782 547.	23-34-27
2782 848.	23-34-27
2782 849.	23-34-27
2782 874.	23-63-105
2782 875.	23-63-105
2784 148.	23-11-10
2784 433.	23-58-78
2785 200.	12-15-21
2800 059.	3-03-1
2800 065.	3-03-1
2802 001.	23-19-30
2802 003.	23-19-36
2802 004.	23-19-36
2806 400.	14-07-15
2807 152.	1-67-18
2807 153.	1-67-18
2807 154.	1-67-18
2807 155.	1-67-18
2807 156.	1-67-18
2807 158.	1-67-18
2807 159.	1-67-18
2807 167.	1-67-18
2807 168.	1-67-18
2807 169.	1-67-18
2807 170.	1-67-18
2807 171.	1-67-18
2807 172.	1-67-18
2807 176.	1-67-18
2807 177.	1-67-18
2807 178.	1-67-18
2807 179.	1-67-18
2807 180.	1-67-18
2807 181.	1-67-18
2807 182.	1-67-18
2807 188.	1-67-18
2807 189.	1-67-18
2807 190.	1-67-18
2807 191.	1-67-18
2807 192.	1-67-18
2807 193.	1-67-18
2807 194.	1-67-18
2807 195.	1-67-18
2808 000.	14-35-1
2808 011.	14-30-4
2808 017.	14-30-4
2808 019.	14-30-4
2808 020.	14-30-7
2808 021.	14-30-4
2808 023.	14-30-7
	14-34-3
2808 059.	14-41-23
2808 061.	14-41-22
2808 062.	14-41-7
2808 067.	14-30-4
2808 068.	14-30-7
2808 076.	14-30-4
2808 077.	14-30-4
2808 078.	14-30-4
2808 219.	9-32-2
2808 220.	9-32-2
2808 221.	9-32-2
2808 222.	9-32-2
2808 223.	9-32-2
2808 225.	5-05-9
2808 273.	5-03-3
2808 278.	5-100-1
2808 342.	9-32-2
2808 870.	8-27-158
2808 899.	1-48-122
2808 904.	1-48-122
2820 538.	1-87-2
6000 050.	12-15-21
6000 106.	23-58-605
6000 123.	13-66-135
6000 130.	23-10-1
	23-32-73
6000 141.	23-39-12
	23-54-72
6000 182.	23-58-601
6000 209.	23-15-9
6000 211.	23-39-11
6000 305.	23-39-12
	23-41-4
	23-54-72
	23-54-98
	23-64-281
6000 319.	23-58-607
6000 320.	23-58-605
6000 321.	23-58-245
6000 374.	23-63-105
	23-64-242
	23-64-255
6000 394.	24-01-38
	24-29-15
6000 432.	23-58-600
6000 967.	23-22-145
6001 698.	23-22-145
6006 043.	23-15-9
6006 047.	23-15-9
6006 086.	23-15-13
6006 104.	13-66-116
6006 120.	8-01-13
	8-28-74
	8-33-164
	8-35-52
	8-52-328
6006 144.	13-66-31
6006 217.	23-54-19
6006 221.	23-58-234
6006 222.	23-58-245
6006 235.	23-58-228
6006 244.	23-64-242
6006 261.	23-61-99
6006 324.	23-19-30
6008 041.	23-06-68
6008 050.	23-47-196
	23-47-350
6008 051.	23-47-350
6008 060.	1-47-11
	23-54-171
	23-58-533
	23-67-161
6008 110.	23-47-427
6008 111.	23-47-9
6008 144.	1-48-267
	4-25-15
6008 145.	1-48-267
	4-25-15
	23-54-180
6008 216.	23-47-196
	23-47-350
6008 220.	23-47-9
6010 031.	12-02-5
6010 035.	12-02-5
6010 048.	23-64-272
6012 008.	13-64-149
6012 031.	2-08-55
	2-10-17
6014 023.	8-55-9
6015 143.	1-48-941
	15-14-1
	24-01-65
6015 149.	8-01-7
6015 288.	8-15-32
6015 366.	8-01-7
6015 377.	8-15-32
	8-19-24
	8-55-18
	23-41-4
	23-54-178
6022 006.	8-52-100
6022 007.	8-55-162
6022 052.	8-55-12
6022 117.	23-58-605
	23-58-606
6022 147.	23-54-6
6022 148.	9-46-4
6022 161.	21-42-16
6022 181.	9-23-5
6022 185.	8-35-4
	9-48-7
	23-48-109
6022 188.	19-54-198
6022 190.	3-01-34
	8-28-6
	9-05-5
	9-67-4
6022 191.	23-54-19
6022 225.	14-26-3
6022 297.	23-06-42
	23-06-53
6022 381.	8-15-33
	8-29-130
6022 582.	9-03-28
6022 583.	21-138-7
6022 691.	23-58-605
6022 696.	23-58-605
6022 701.	8-55-23
6022 704.	8-50-303
6022 707.	23-58-605
6022 777.	13-33-61
	14-01-15
6022 816.	21-05-19
6022 817.	21-138-7
6022 831.	17-23-57
6022 838.	11-10-18
6022 858.	23-14-41
	23-58-605
6022 859.	21-05-19
	21-129-7
6022 891.	23-15-9
6022 895.	13-33-61
6022 899.	13-66-20
6022 901.	13-64-5
6022 938.	23-54-143
6022 952.	8-37-199
6022 958.	1-48-937
6022 988.	23-14-41
	23-64-62
6022 989.	23-58-606
6022 991.	23-54-4
6022 998.	23-18-5
	23-54-1
6023 006.	23-64-275
6023 011.	17-19-20
6023 012.	17-29-14
6023 021.	17-15-6
6023 035.	8-28-7
6023 036.	19-14-21
6023 039.	23-48-20
6023 045.	19-14-4
6023 046.	19-46-8
6023 050.	9-64-24
6023 053.	9-15-10
	9-17-5
	9-17-7
6023 054.	19-02-18
6023 085.	19-48-45
6023 086.	19-48-45
6023 092.	7-08-15
	21-03-23
	21-30-375
6023 096.	23-39-15
6023 111.	8-55-9
	8-55-161
6023 112.	8-29-194
6023 118.	4-10-22
	9-48-7
6023 133.	5-58-2
6023 141.	8-50-337
6023 143.	21-03-23
6023 145.	9-45-1
6023 166.	8-37-199
6023 167.	13-35-1
6023 169.	13-33-68
	19-54-198
6023 170.	13-33-68
	15-19-2
6023 171.	13-33-68
6023 185.	8-55-12
	8-56-25
6023 187.	9-46-61
	21-03-23
6023 201.	1-48-12
	8-34-62
	8-37-199
	8-56-4
6023 202.	8-50-303
	8-55-9
	21-30-24
6023 204.	8-55-9
	8-56-4
	8-58-60
	23-34-216
	23-39-34
	23-58-478
6023 205.	8-55-9
6023 214	21-30-49
	23-64-255
6023 215.	8-31-11
6023 227.	23-48-188
6023 253.	8-32-18
6023 264.	23-64-48
	23-64-275

MyMopar.com

PART NUMBER	CODE
6023 271	8-47-15
	8-47-131
	13-68-18
6023 285	4-10-25
	14-07-1
	14-11-40
	21-30-365
6023 292	8-50-337
6023 293	2-10-6
	2-10-7
6023 343	21-139-74
6023 346	8-33-70
6023 350	15-19-2
6023 355	21-119-3
6023 363	23-54-19
6023 365	23-54-1
6023 387	8-37-199
6023 414	8-56-53
6023 512	8-53-154
6023 514	21-04-6
6023 523	13-36-5
6023 524	21-117-1
6023 531	23-32-51
6023 537	23-64-242
6023 538	23-14-18
	23-14-27
	23-14-53
	23-14-79
6023 541	8-58-60
6023 546	23-09-9
	23-09-52
	23-09-58
6023 548	14-73-1
6023 551	6-52-10
6023 553	23-64-272
6023 575	23-64-299
6023 576	23-15-9
6023 587	9-43-3
6023 596	21-42-25
6023 598	23-54-165
6023 599	8-56-25
6023 630	19-27-31
6023 695	23-09-64
6023 850	13-66-20
6023 852	23-64-79
6023 890	17-23-57
6023 893	23-58-606
6023 898	23-26-47
6023 899	8-52-5
6023 925	8-47-15
	8-47-131
6023 938	23-22-145
6023 943	21-118-55
6023 946	23-39-5
	23-39-34
6023 963	5-64-2
6023 977	13-66-135
6023 984	8-37-188
6023 996	23-58-603
6023 997	4-23-6
6024 000	23-41-4
	23-41-53
6024 003	8-37-188
6024 004	21-30-425
6024 023	9-67-4
6024 060	19-46-40
6024 079	23-54-165
6024 084	23-54-73
	23-55-159
6024 113	8-55-9
6024 125	21-19-15
6024 126	23-58-605
	23-58-606
6024 127	23-58-605
6024 128	23-58-605
6024 130	21-17-7
6024 131	21-14-20
6024 141	21-15-32
6024 152	8-55-9
6024 153	8-57-13
6024 164	8-50-337
6024 179	8-47-14
	8-47-130
6024 218	23-58-603
6024 223	23-48-121
6024 243	13-66-15
6024 244	8-52-227
6024 246	9-23-10
6024 248	17-23-57
6024 272	19-14-18
6024 273	23-41-106
6024 296	23-58-605
6024 311	21-05-19
6024 312	21-05-19
6024 317	8-57-11
6024 318	9-46-21
6024 319	23-64-280
6024 323	11-10-17
6024 333	19-14-4
6024 338	23-22-86
6024 343	11-06-3
6024 366	23-45-187
6024 380	9-48-6
6024 400	23-22-145
6024 402	8-05-6
6024 403	8-11-21
6024 424	15-11-5
6024 427	8-50-337
6024 432	23-47-35
6024 433	23-15-9
6024 439	23-45-187
6024 440	23-45-187
6024 456	23-58-603
6024 457	21-29-33
6024 474	23-21-15
6024 487	19-19-24
6024 493	8-56-41
	23-19-103
6024 495	8-55-209
6024 496	8-50-337
6024 497	8-55-159
6024 499	8-55-159
6024 510	23-21-15
6024 552	21-30-425
6024 554	21-30-425
6024 556	8-37-188
6024 565	2-10-63
6024 576	8-37-188
6024 579	8-55-159
6024 627	8-37-188
6024 629	8-50-130
6024 648	23-39-5
	23-39-34
	23-41-4
	23-41-106
	23-42-59
	23-54-72
	23-54-150
	23-64-299
	23-64-300
6024 657	2-10-63
6024 662	13-64-5
	13-66-20
6024 678	23-54-150
6024 699	8-53-154
6024 702	8-55-163
6024 802	23-58-603
6024 803	2-10-63
6024 810	19-54-115
6024 813	23-39-5
	23-39-15
	23-39-34
	23-42-59
	23-54-72
	23-54-127
	23-54-141
	23-54-193
	23-64-200
	23-64-273
	23-64-299
6024 822	21-05-19
6024 823	21-05-19
6024 827	21-30-49
	21-30-408
6024 830	23-58-333
6024 834	11-10-3
6024 836	19-14-23
	19-46-16
6024 837	19-14-23
6024 845	9-03-28
6024 848	23-04-205
6024 855	8-55-209
6024 856	8-34-62
6024 862	21-03-23
6024 863	21-03-23
6024 864	9-46-61
6024 871	23-15-9
6024 888	23-58-606
6024 892	8-55-159
6024 893	13-66-31
6024 899	19-46-15
6024 965	23-19-85
6024 972	23-48-109
6024 973	23-48-109
6024 995	8-34-96
6024 997	23-63-105
6024 998	23-41-7
6025 001	8-37-199
6025 002	4-25-14
	13-66-153
6025 031	9-36-7
6025 032	8-34-62
6025 033	8-34-62
6025 039	8-50-337
6025 048	9-10-19
6025 057	8-50-337
6025 063	19-01-8
	19-19-24
	23-54-4
6025 071	19-48-1
	21-42-23
	21-42-25
6025 081	8-57-11
6025 141	23-64-275
6025 181	23-22-86
6025 199	23-64-48
6025 206	23-58-67
6025 207	23-58-67
6025 208	23-58-67
6025 227	23-54-17
6025 231	23-42-46
6025 237	19-02-4
6025 254	19-46-43
6025 257	19-15-23
6025 275	23-21-8
6025 278	19-15-23
6025 281	23-58-227
6025 282	23-58-227
6025 290	13-33-61
6025 306	8-34-96
6025 336	17-19-11
6025 346	15-19-2
6025 391	23-48-98
6025 419	9-71-5
6025 420	16-02-5
6025 421	16-02-5
6025 523	2-10-63
6025 528	9-46-21
6025 557	23-64-273
6025 558	13-11-17
6025 562	23-21-14
6025 570	21-05-8
6025 588	23-54-180
6025 667	9-03-28
6025 671	19-30-18
6025 676	8-34-96
6025 677	19-02-4
6025 681	8-34-96
6025 682	8-34-96
6025 683	8-34-96
6025 684	8-34-96
6025 685	8-34-96
6025 695	19-14-21
6025 708	1-76-18
6025 709	23-48-19
6025 711	8-34-96
6025 734	2-10-55
6025 759	9-48-7
6025 795	19-54-123
6025 849	8-34-96
6025 897	8-34-96
6025 934	24-24-150
6026 001	9-48-7
6026 009	5-58-1
6026 010	8-55-162
6026 011	23-15-9
6026 050	9-17-5
6026 051	13-66-44
6026 075	8-34-62
6026 098	14-01-39
6026 140	9-03-4
6026 141	9-03-4
	9-03-10
6026 142	9-03-4
6026 186	23-38-14
6026 239	21-42-25
6026 243	9-03-4
6026 251	19-46-8
6026 264	14-02-30
6026 273	8-01-10
6026 435	19-15-23
6026 489	13-10-1
6072 670	5-03-6
9405 339	8-34-96
9411 259	9-45-1
9412 348	8-44-1
9414 181	8-27-250
9415 312	23-06-17
9415 969	8-44-1
9416 049	23-08-12
9416 107	2-10-17
9416 684	23-21-14
9416 927	8-44-1
9417 668	13-11-17
9417 865	8-44-1
9417 866	8-44-1
9417 867	8-44-1
9418 004	9-11-7
9418 005	9-11-7
9418 006	23-14-53
9418 398	8-52-214
9418 772	8-44-1
9418 903	8-44-1
9419 347	8-55-209
9419 774	23-14-16
9419 780	8-44-1
9420 374	23-19-98
9420 536	8-44-1

MyMopar.com

PART NUMBER	CODE
9420 742	9-48-43
9420 830	8-44-1
9421 360	9-48-43
9422 009	19-15-23
9422 159	19-15-23
	19-15-43
9422 165	8-50-337
9422 342	8-37-188
9422 790	8-28-6
9422 791	8-28-6
9422 821	8-34-96
9423 017	23-54-214
1320 AX9	23-26-43
	23-26-77
1519 VX8	23-63-33
1519 VY3	23-63-33
1520 AY3	23-63-33
1522 AB4	23-63-33
1522 AQ4	23-63-33
1522 AR5	23-63-33
1522 VT6	23-63-33
1524 AB4	23-63-33
1524 AQ4	23-63-33
1524 AR5	23-63-33
1524 AY3	23-63-33
1524 VT6	23-63-33
1528 AB4	23-63-33
1528 AQ4	23-63-33
1528 AR5	23-63-33
1528 AY3	23-63-33
1528 VR6	23-63-33
1528 VT6	23-63-33
1528 VX8	23-63-33
1529 AQ4	23-63-33
1529 AR5	23-63-33
1529 AY3	23-63-33
1529 VR6	23-63-33
1529 VT6	23-63-33
1529 VX8	23-63-33
1530 AB4	23-63-33
1530 AQ4	23-63-33
1530 AR5	23-63-33
1530 AR7	23-63-33
1530 AY3	23-63-33
1530 TR6	23-63-33
1530 VT6	23-63-33
1530 VX8	23-63-33
1531 AB4	23-63-33
1531 AQ4	23-63-33
1531 AR5	23-63-33
1531 AR7	23-63-33
1531 AY3	23-63-33
1531 TR6	23-63-33
1531 VT6	23-63-33
1531 VX8	23-63-33
1600 ARX	23-20-8
1600 VBB	23-20-8
1600 VQQ	23-20-8
1600 VTT	23-20-8
1601 VX8	23-20-8
1603 ABB	23-20-11
	23-20-41
1603 AQQ	23-20-11
	23-20-41
1603 ARX	23-20-11
	23-20-41
1603 ATT	23-20-11
	23-20-41
1604 AY8	23-20-11
	23-20-41
1607 TXA	23-20-41
1608 TX8	23-20-41
1612 TX8	23-20-41
1612 VB8	23-20-41
1612 VQ8	23-20-41
1612 VR8	23-20-41
1612 VT8	23-20-41
1613 TA7	23-20-29
1614 TA7	23-20-29
1615 TX8	23-20-8
1617 AB8	23-20-41
1617 AQ8	23-20-41
1617 AR7	23-20-41
1617 AT8	23-20-41
1617 TX8	23-20-41
1619 AB8	23-20-11
1619 AQ8	23-20-11
1619 AR7	23-20-11
1619 AT8	23-20-11
1619 AX8	23-20-11
	23-20-41
1626 AX8	23-20-8
1631 AB8	23-20-41
1631 AQ8	23-20-41
1631 AR7	23-20-41
1631 AT8	23-20-41
1631 AY8	23-20-41
1632 AX8	23-20-41
1635 AX8	23-20-41
1637 AX8	23-20-11
	23-20-41
1643 AB8	23-20-8
1643 AQ8	23-20-8
1643 AR7	23-20-8
1643 AT8	23-20-8
1644 AY8	23-20-8
1964 VW2	23-58-3
1967 VW2	23-58-3
1978 AW2	23-58-3
1980 AW2	23-58-3
1981 AW2	23-58-3
2451 AW3	23-14-27
2708 AT8	23-47-8
2709 AT8	23-47-8
3450 AB4	23-14-27
3450 AL3	23-14-27
3450 AM9	23-14-27
3450 AQ4	23-14-27
3450 AW3	23-14-27
3450 VF9	23-14-27
3450 VR7	23-14-27
3450 VX9	23-14-27
3451 AB4	23-14-27
3451 AL3	23-14-27
3451 AM9	23-14-27
3451 AQ4	23-14-27
3451 VF9	23-14-27
3451 VR7	23-14-27
3451 VX9	23-14-27
3452 VX9	23-14-27
3453 VX9	23-14-27
3706 AQ6	23-22-145
3706 AY6	23-22-145
3707 AQ6	23-22-145
3707 AY6	23-22-145
3708 BT6	23-22-145
3709 BT6	23-22-145
4000 AW3	19-30-4
4000 AX9	19-30-4
4001 AB4	19-30-4
4001 AQ4	19-30-4
4001 AR7	19-30-4
4001 AT5	19-30-4
4001 AT6	19-30-4
4001 AU9	19-30-4
4001 AY3	19-30-4
4002 AB4	19-30-4
4002 AQ4	19-30-4
4002 AR7	19-30-4
4002 AT6	19-30-4
4002 AY3	19-30-4
4003 AB6	19-30-4
4003 AQ6	19-30-4
4003 AR7	19-30-4
4003 AT6	19-30-4
4003 AW4	19-30-4
4003 AX9	19-30-4
4003 AY3	19-30-4
4004 AR6	19-30-4
4004 AW4	19-30-4
4004 AX9	19-30-4
4005 AAX	19-30-4
4005 ABB	19-30-4
4005 AFF	19-30-4
4005 ALL	19-30-4
4005 AMM	19-30-4
4005 AQQ	19-30-4
4005 ARR	19-30-4
4005 AWX	19-30-4
4006 AR7	19-30-4
4006 TR6	19-30-4
4006 TW4	19-30-4
4006 VB6	19-30-4
4006 VQ6	19-30-4
4006 VT6	19-30-4
4006 VX9	19-30-4
4006 VY6	19-30-4
4008 AB4	19-30-4
4008 AQ4	19-30-4
4008 AR7	19-30-4
4008 AT6	19-30-4
4008 AY3	19-30-4
4009 AB4	19-30-4
4009 AQ4	19-30-4
4009 AR7	19-30-4
4009 AT6	19-30-4
4009 AY3	19-30-4
4010 VT5	8-33-5
4010 VX9	8-33-5
4011 AW3	19-30-4
4011 AX9	19-30-4
4016 VTT	19-30-4
4017 AB7	8-33-69
4017 AQ6	8-33-69
4017 AR6	8-33-69
4017 AR7	8-33-69
4017 AT5	8-33-69
4020 AX9	19-30-4
4020 AW3	19-30-4
4101 AT6	24-28-3
4103 AT6	24-28-3
4104 AW3	24-28-3
4105 AT6	24-28-3
4106 AW3	24-28-3
4128 VX9	23-22-86
4129 VX9	23-22-86
4135 VB8	23-48-32
4135 VR6	23-48-32
4135 VX9	23-48-32
4135 VY3	23-48-32
4136 VB8	23-48-32
4136 VR6	23-48-32
4136 VX9	23-48-32
4136 VY3	23-48-32
4163 VX9	23-34-178
4200 VF9	23-33-109
4201 VF9	23-33-109
4222 VX9	24-28-75
4223 VX9	24-28-75
4231 AR7	23-33-132
4231 AY4	23-33-132
4231 VB5	23-33-132
4231 VQ7	23-33-132
4231 VR6	23-33-132
4231 VT5	23-33-132
4231 VX9	23-33-132
4233 AB8	1-48-158
4233 AQ8	1-48-158
4233 AY8	1-48-158
4233 VR8	1-48-158
4233 VT8	1-48-158
4233 VX9	1-48-158
4242 AR7	23-33-89
4242 AY6	23-33-89
4242 TR6	23-33-89
4242 VB6	23-33-89
4242 VQ6	23-33-89
4242 VT6	23-33-89
4242 VX9	23-33-89
4243 AR7	23-33-89
4243 AY6	23-33-89
4243 TR6	23-33-89
4243 VB6	23-33-89
4243 VQ6	23-33-89
4243 VT6	23-33-89
4243 VX9	23-33-89
4257 AB5	23-33-132
4257 AQ7	23-33-132
4257 AR7	23-33-132
4257 AT5	23-33-132
4257 AX9	23-33-132
4257 AY4	23-33-132
4267 AX9	23-02-33
4313 AB6	23-18-27
4313 AQ6	23-18-27
4313 AR7	23-18-27
4313 AT6	23-18-27
4313 AW2	23-18-27
4313 AY3	23-18-27
4313 AY4	23-18-27
4313 TX9	23-18-27
4318 TX8	23-04-229
4396 AB8	23-47-8
4396 AL6	23-47-8
4396 AM9	23-47-8
4396 AQ8	23-47-8
4396 AR5	23-47-8
4396 AT8	23-47-8
4396 AT9	23-47-8
4396 AU9	23-47-8
4396 AY8	23-47-8
4396 TY9	23-47-8
4396 VB6	23-47-8
4396 VF9	23-47-8
4396 VR7	23-47-8
4397 AB8	23-47-8
4397 AL6	23-47-8
4397 AM9	23-47-8
4397 AQ8	23-47-8
4397 AR5	23-47-8
4397 AT8	23-47-8
4397 AT9	23-47-8
4397 AU9	23-47-8
4397 AY8	23-47-8
4397 TV9	23-47-8
4397 VB6	23-47-8
4397 VF9	23-47-8
4397 VR7	23-47-8
4398 AB8	23-47-8
4398 AL6	23-47-8
4398 AM9	23-47-8
4398 AQ8	23-47-8
4398 AR5	23-47-8
4398 AT8	23-47-8
4398 AT9	23-47-8
4398 AU9	23-47-8
4398 AY8	23-47-8
4398 TX9	23-47-8
4398 VB6	23-47-8
4398 VF9	23-47-8
4398 VR7	23-47-8
4399 AB8	23-47-8
4399 AL6	23-47-8

MyMopar.com

PART NUMBER	CODE
4399 AM9	23-47-8
4399 AQ8	23-47-8
4399 AR5	23-47-8
4399 AT8	23-47-8
4399 AT9	23-47-8
4399 AU9	23-47-8
4399 AY8	23-47-8
4399 TX9	23-47-8
4399 VB6	23-47-8
4399 VF9	23-47-8
4399 VR7	23-47-8
4405 AQ4	23-38-7
4405 AQ8	23-38-7
4405 AR6	23-38-7
4405 AR7	23-38-7
4405 AT6	23-38-7
4405 AW3	23-38-7
4405 AX9	23-38-7
4405 AY3	23-38-7
4407 VX9	21-30-6
4411 VX8	1-87-21
4428 AB4	23-26-87
4428 AB8	23-26-87
4428 AR7	23-26-87
4428 AT6	23-26-87
4428 AW3	23-26-87
4428 AX9	23-26-87
4428 AY3	23-26-87
4429 AB4	23-26-87
4429 AB8	23-26-87
4429 AR7	23-26-87
4429 AT6	23-26-87
4429 AW3	23-26-87
4429 AX9	23-26-87
4429 AY3	23-26-87
4432 AB4	23-38-7
4432 AB8	23-38-7
4432 AR7	23-38-7
4432 AT6	23-38-7
4432 AW3	23-38-7
4432 AX9	23-38-7
4432 AY3	23-38-7
4442 AX9	24-28-75
	24-28-78
4457 AA3	23-49-3
4457 AB4	23-49-3
4457 AF9	23-49-3
4457 AM9	23-49-3
4457 AR7	23-49-3
4458 VX9	23-19-78
4496 AB8	1-67-18
4496 AQ8	1-67-18
4629 AB4	23-49-3
4629 AF9	23-49-3
4629 AM9	23-49-3
4629 AR7	23-49-3

MyMopar.com

TRIM NUMERICAL INDEX

PART NUMBER	CODE
1158 976.	23-112-75
1158 977.	23-112-75
1280 134.	23-76-16
1697 413.	23-81-3
1759 636.	23-86-36
1918 299.	23-115-5
2092 212.	23-115-10
2094 869.	23-108-57
2160 974.	23-115-6
2162 628.	23-103-48
2251 808.	23-86-36
2251 809.	23-86-36
2252 610.	23-112-70
2270 102.	23-76-28
2292 901.	23-79-33
2410 054.	23-115-6
2410 102.	23-115-4
2421 944.	23-112-70
2421 945.	23-112-70
2424 591.	23-109-38
	23-111-37
2424 607.	23-109-38
	23-111-37
2440 144.	23-86-35
2440 219.	23-108-98
2440 340.	23-108-98
2481 374.	23-109-38
	23-111-37
2482 372.	23-86-19
2482 373.	23-86-19
2482 374.	23-86-19
2482 375.	23-86-19
2482 436.	23-112-70
2482 437.	23-112-70
2482 438.	23-112-70
2482 956.	23-109-38
2483 767.	23-86-31
2484 048.	23-86-19
2484 049.	23-86-19
2485 395.	23-86-14
2494 106.	23-108-98
2494 114.	23-115-6
2499 083.	23-86-24
2499 084.	23-86-24
2499 086.	23-86-24
2499 117.	23-96-3
2522 169.	23-78-2
2525 852.	23-112-88
2526 966.	23-112-70
2526 967.	23-112-70
2528 254.	23-109-38
	23-111-37
2528 264.	23-109-38
	23-111-37
2528 894.	23-96-3
2571 683.	23-113-58
2572 131.	23-112-21
2572 133.	23-113-31
2572 142.	23-115-8
2572 166.	23-113-84
2572 543.	23-71-1
2572 486.	23-79-5
2573 040.	23-86-8
2573 041.	23-86-8
2573 042.	23-86-8
2573 043.	23-86-8
2573 686.	23-111-37
2573 692.	23-86-8
2577 071.	23-109-38
2577 198.	23-108-98
2577 199.	23-108-98
2577 202.	23-108-98
2577 203.	23-108-98
2577 205.	23-108-98
2577 206.	23-108-98
2577 207.	23-108-98
2577 209.	23-108-98
2577 276.	23-112-18
2577 277.	23-112-18
2577 380.	23-115-6
2577 426.	23-109-47
2581 373.	23-103-18
2581 395.	23-115-6
2581 461.	23-86-24
2581 490.	23-96-8
2581 491.	23-96-8
2581 718.	23-115-8
2581 738.	23-96-3
2581 892.	23-86-35
2589 026.	23-112-88
2589 027.	23-112-88
2589 778.	23-96-8
2589 779.	23-96-8
2602 109.	23-96-3
2602 136.	23-86-19
2603 137.	23-86-19
2603 276.	23-86-8
2603 277.	23-86-8
2603 278.	23-86-8
2603 279.	23-86-8
2603 280.	23-86-8
2603 281.	23-86-8
2603 557.	23-111-37
2603 464.	23-96-3
2603 956.	23-86-8
2603 957.	23-86-8
2603 958.	23-86-8
2656 442.	23-86-33
2656 702.	23-77-8
2656 703.	23-77-9
2656 704.	23-77-8
2656 731.	23-79-68
2656 924.	23-99-17
2657 868.	23-96-3
2664 466.	23-91-20
2807 530.	23-79-3
6000 106.	23-103-10
6000 137.	23-79-79
6000 272.	23-77-3
	23-77-17
6000 365.	23-92-5
	23-101-3
	23-102-3
	23-109-11
6000 432.	23-112-12
6000 434.	23-112-12
	23-112-153
6000 700.	23-79-79
	23-84-3
6000 903.	23-96-3
	23-96-8
	23-96-16
	23-102-3
6000 922.	23-86-19
6001 425.	23-96-3
6001 427.	23-84-3
6001 560.	23-71-1
6001 873.	23-86-3
6002 072.	23-71-1
6008 221.	23-108-84
6008 222.	23-84-3
6016 005.	23-108-15
6022 169.	23-112-88
6023 003.	23-109-11
6023 215.	23-109-14
6023 247.	23-112-112
6023 248.	23-86-19
6023 381.	23-92-5
	23-101-3
	23-112-70
	23-112-153
6023 388.	23-91-6
6023 476.	23-101-3
6023 545.	23-109 3
6023 776.	23-109-10
	23-109-12
6024 203.	23-108-4
	23-108-12
6024 271.	23-86-8
	23-86-20
	23-99-17
6024 274.	23-84-3
6024 402.	23-86-35
6024 438.	23-112-75
6024 678.	23-79-33
	23-79-79
	23-109-5
6025 292.	23-109-3
6025 540.	23-79-79
6025 550.	23-109-12
6025 583.	23-109-10
	23-109-12
6025 692.	23-86-11
	23-86-35
6025 693.	23-77-3
	23-77-17
6025 727.	23-112-88
6025 729.	23-112-88
6026 221.	23-96-8
9415 214.	23-91-6
9415 942.	23-108-98
0102 ABB	23-114-2
0102 AQQ	23-114-2
0102 ARR	23-114-2
0102 ATT	23-114-2
0104 ABB	23-114-2
0104 AQQ	23-114-2
0104 ARR	23-114-2
0104 ATT	23-114-2
0105 ABB	23-114-2
0105 ARR	23-114-2
0105 ATT	23-114-2
0106 ABB	23-114-2
0106 AQQ	23-114-2
0106 ARR	23-114-2
0106 ATT	23-114-2
0108 ABB	23-114-2
0108 AQQ	23-114-2
0108 ARR	23-114-2
0108 ATT	23-114-2
0108 AYY	23-114-2
0110 AB8	23-114-15
0110 AQ8	23-114-15
0110 AR8	23-114-15
0110 AT8	23-114-15
0110 AY8	23-114-2
0111 ABB	23-114-2
0111 ANN	23-114-2
0111 AQQ	23-114-2
0111 ARR	23-114-2
0111 ATT	23-114-2
0112 ABB	23-114-2
0112 AQQ	23-114-2
0112 ARR	23-114-2
0112 ATT	23-114-2
0114 ABB	23-114-2
0114 ALL	23-114-2
0114 AQQ	23-114-2
0114 ARR	23-114-2
0114 ATT	23-114-2
0114 AXX	23-114-2
0118 AA3	23-114-2
0118 AB4	23-114-2
0118 AL3	23-114-2
0118 AQ4	23-114-2
0118 AR5	23-114-2
0118 AX8	23-114-2
0119 AA4	23-114-2
0120 AA3	23-114-2
0120 AB4	23-114-2
0120 AL3	23-114-2
0121 AB4	23-114-2
0121 AL2	23-114-2
0121 AX8	23-114-2
0125 ABB	23-114-2
0125 ALL	23-114-2
0125 ANN	23-114-2
0125 AQQ	23-114-2
0125 ARR	23-114-2
0125 ATT	23-114-2
0127 AB8	23-114-2
0127 AQ8	23-114-2
0127 AR5	23-114-2
0127 AT8	23-114-2
0128 ABB	23-114-2
0128 ARR	23-114-2
0128 ATT	23-114-2
0130 AB9	23-114-2
0130 AQ9	23-114-2
0302 AB4	23-114-14
0302 AF9	23-114-14
0302 AL3	23-114-14
0302 AM9	23-114-14
0302 AQ4	23-114-14
0302 AR5	23-114-14
0302 AR7	23-114-14
0302 AW3	23-114-14
0302 AX9	23-114-14
0400 VR7	23-114-15
0400 VT8	23-114-15
0400 VW3	23-114-15
0405 AB4	23-114-15
0405 AB8	23-114-15
0405 AQ4	23-114-15
0405 AQ8	23-114-15
0405 AR5	23-114-15
0405 AR8	23-114-15
0405 VT6	23-114-15
0413 AB8	23-114-15
0413 AQ8	23-114-15
0413 AR8	23-114-15
0413 AT8	23-114-15
0417 AB4	23-114-15
0417 AB8	23-114-15
0417 AQ4	23-114-15
0417 AQ8	23-114-15
0417 AR5	23-114-15
0417 AT8	23-114-15
0417 VB6	23-114-15
0417 VR6	23-114-15
0417 VT6	23-114-15
0441 AB4	23-114-15
0441 AB8	23-114-15
0441 AQ4	23-114-15
0441 AQ8	23-114-15
0441 AR5	23-114-15
0441 AR8	23-114-15
0441 AT5	23-114-15
0441 AV8	23-114-15
0441 AY3	23-114-15
0441 AY8	23-114-15
0441 VR6	23-114-15
0441 VR7	23-114-15
0441 VT6	23-114-15
0441 VT8	23-114-15
0441 VX9	23-114-15

MyMopar.com

PART NUMBER	CODE
0445 AT8	23-114-15
0464 AB4	23-114-15
0464 AB8	23-114-15
0464 AF9	23-114-15
0464 AL3	23-114-15
0464 AM9	23-114-15
0464 AQ4	23-114-15
0464 AQ8	23-114-15
0464 AR5	23-114-15
0464 AR7	23-114-15
0464 AT6	23-114-15
0464 AT8	23-114-15
0464 AW3	23-114-15
0464 AX9	23-114-15
0464 AY3	23-114-15
0464 AY8	23-114-15
0471 AB8	23-114-15
0471 AR7	23-114-15
0471 AT8	23-114-15
0472 AB8	23-114-15
0472 AR7	23-114-15
0472 AT8	23-114-15
0472 AW3	23-114-15
0472 AX9	23-114-15
0478 AB4	23-114-15
0478 AQ4	23-114-15
0478 AR5	23-114-15
0478 AR7	23-114-15
0478 AR8	23-114-15
0478 AT6	23-114-15
0478 AY3	23-114-15
0479 AB9	23-114-15
0479 AQ9	23-114-15
0479 AR9	23-114-15
0479 AT8	23-114-15
0480 AR9	23-114-15
0486 AB4	23-114-15
0486 AF9	23-114-15
0486 AL3	23-114-15
0486 AR5	23-114-15
0486 AW3	23-114-15
0486 AX9	23-114-15
0487 AB8	23-114-15
0487 AQ8	23-114-15
0487 AR5	23-114-15
0487 AR6	23-114-15
0487 AT8	23-114-15
0487 AX9	23-114-15
0487 AY8	23-114-15
0488 ABB	23-114-15
0488 AQ8	23-114-15
0488 AR8	23-114-15
0488 AT8	23-114-15
0488 AY8	23-114-15
0489 ABB	23-114-15
0489 AQQ	23-114-15
0489 ARR	23-114-15
0489 ATT	23-114-15
0491 ABB	23-114-15
0491 ARR	23-114-15
0491 ATT	23-114-15
0492 ABB	23-114-15
0492 AQQ	23-114-15
0492 ARR	23-114-15
0492 ATT	23-114-15
0493 AB4	23-114-15
0493 AR6	23-114-15
0493 AT6	23-114-15
0494 AB4	23-114-15
0494 AQ4	23-114-15
0494 AR7	23-114-15
0494 AT6	23-114-15
0497 AB8	23-114-15
0497 AQ8	23-114-15
0497 AR5	23-114-15
0497 AT8	23-114-15
1004 AW2	23-86-3
1004 AWW	23-86-3
1005 AW2	23-86-3
1005 AWW	23-86-3
1006 AW2	23-86-3
1006 AWW	23-86-3
1007 AW2	23-86-3
1007 AWW	23-86-3
1008 AW2	23-86-3
1008 AWW	23-86-3
1010 AA2	23-86-3
1010 AB4	23-86-3
1010 AQ4	23-86-3
1010 AT4	23-86-3
1010 AT6	23-86-3
1010 AW2	23-86-3
1012 AA2	23-86-3
1012 AB4	23-86-3
1012 AQ4	23-86-3
1012 AT4	23-86-3
1012 AT6	23-86-3
1012 AW2	23-86-3
1013 AA2	23-86-3
1013 AB4	23-86-3
1013 AQ4	23-86-3
1013 AT4	23-86-3
1013 AT6	23-86-3
1013 AW2	23-86-3
1014 AA2	23-86-3
1014 AB4	23-86-3
1014 AQ4	23-86-3
1014 AT4	23-86-3
1014 AT6	23-86-3
1014 AW2	23-86-3
1018 AT4	23-86-35
1021 AA2	23-86-3
1021 AB4	23-86-3
1021 AL2	23-86-3
1021 AT6	23-86-3
1021 AW2	23-86-3
1027 AW2	23-86-3
1027 AWW	23-86-3
1028 AW3	23-86-3
1028 AWW	23-86-3
1030 VW2	23-86-36
1047 VW2	23-86-35
1051 AB3	23-86-3
1051 ABB	23-86-3
1051 AQ3	23-86-3
1051 AQQ	23-86-3
1051 AR7	23-86-3
1051 ARR	23-86-3
1051 AT3	23-86-3
1051 ATT	23-86-3
1051 AW2	23-86-3
1051 AWW	23-86-3
1051 AY3	23-86-3
1051 AYY	23-86-3
1052 AB3	23-86-3
1052 ABB	23-86-3
1052 AQ3	23-86-3
1052 AQQ	23-86-3
1052 AR7	23-86-3
1052 ARR	23-86-3
1052 AT3	23-86-3
1052 ATT	23-86-3
1052 AW2	23-86-3
1052 AWW	23-86-3
1052 AY3	23-86-3
1052 AYY	23-86-3
1054 AB3	23-86-3
1054 ABB	23-86-3
1054 AQ3	23-86-3
1054 AQQ	23-86-3
1054 AR7	23-86-3
1054 ARR	23-86-3
1054 AT3	23-86-3
1054 ATT	23-86-3
1054 AW2	23-86-3
1054 AWW	23-86-3
1054 AY3	23-86-3
1054 AYY	23-86-3
1055 AB3	23-86-3
1055 ABB	23-86-3
1055 AQ3	23-86-3
1055 AQQ	23-86-3
1055 AR7	23-86-3
1055 ARR	23-86-3
1055 AT3	23-86-3
1055 ATT	23-86-3
1055 AW2	23-86-3
1055 AWW	23-86-3
1055 AY3	23-86-3
1055 AYY	23-86-3
1056 AB3	23-86-3
1056 ABB	23-86-3
1056 AQ3	23-86-3
1056 AQQ	23-86-3
1056 AR7	23-86-3
1056 ARR	23-86-3
1056 AT3	23-86-3
1056 ATT	23-86-3
1506 AW2	23-86-3
1056 AWW	23-86-3
1056 AY3	23-86-3
1056 AYY	23-86-3
1057 AB3	23-86-3
1057 AQ3	23-86-3
1057 AQQ	23-86-3
1057 AR7	23-86-3
1057 ARR	23-86-3
1057 AT3	23-86-3
1057 ATT	23-86-3
1057 AW2	23-86-3
1057 AWW	23-86-3
1057 AY3	23-86-3
1057 AYY	23-86-3
1059 AB4	23-86-3
1059 AQ4	23-86-3
1059 AW2	23-86-3
1060 AB4	23-86-3
1060 AQ4	23-86-3
1060 AW2	23-86-3
1061 AQ4	23-86-3
1062 AB4	23-86-3
1062 AQ4	23-86-3
1062 AW2	23-86-3
1063 AB4	23-86-3
1063 AQ4	23-86-3
1063 AW2	23-86-3
1064 AB4	23-86-3
1064 AQ4	23-86-3
1064 AW2	23-86-3
1066 AB4	23-86-3
1066 AQ4	23-86-3
1066 AW2	23-86-3
1068 AA2	23-86-3
1068 AB4	23-86-3
1068 AQ4	23-86-3
1068 AR5	23-86-3
1068 AT5	23-86-3
1068 AT6	23-86-3
1069 AA2	23-86-3
1069 AB4	23-86-3
1069 AQ4	23-86-3
1069 AR5	23-86-3
1069 AT5	23-86-3
1069 AT6	23-86-3
1070 AA2	23-86-3
1070 AB4	23-86-3
1070 AQ4	23-86-3
1070 AR5	23-86-3
1070 AT5	23-86-3
1070 AT6	23-86-3
1071 AA2	23-86-3
1071 AB4	23-86-3
1071 AQ4	23-86-3
1071 AR5	23-86-3
1071 AT5	23-86-3
1071 AT6	23-86-3
1072 AA2	23-86-3
1072 AB4	23-86-3
1072 AQ4	23-86-3
1072 AR5	23-86-3
1072 AT5	23-86-3
1072 AT6	23-86-3
1073 AA2	23-86-3
1073 AB4	23-86-3
1073 AT6	23-86-3
1073 AW2	23-86-3
1074 AA2	23-86-3
1074 AB4	23-86-3
1074 AT6	23-86-3
1074 AW2	23-86-3
1075 AA2	23-86-3
1075 AB4	23-86-3
1075 AT6	23-86-3
1075 AW2	23-86-3
1076 AA2	23-86-3
1076 AB4	23-86-3
1076 AT6	23-86-3
1076 AW2	23-86-3
1077 AA2	23-86-3
1077 AB4	23-86-3
1077 AT6	23-86-3
1077 AW2	23-86-3
1079 AA2	23-86-35
1079 AB4	23-86-35
1079 AL2	23-86-35
1079 AM2	23-86-35
1079 AT6	23-86-35
1079 AW2	23-86-35
1082 AQ4	23-86-35
1100 AB4	23-103-3
1100 AQ4	23-103-3
1100 AR5	23-103-3
1100 AR7	23-103-3
1100 AW3	23-103-3
1100 AY3	23-103-3
1100 VR6	23-103-3
1100 VT6	23-103-3
1100 VX9	23-103-3
1101 AB3	23-103-3
1101 AQ3	23-103-3
1101 AT3	23-103-3
1101 AW2	23-103-3
1102 AB3	23-103-3
1102 AR6	23-103-3
1102 AT3	23-103-3
1102 AY3	23-103-3
1102 BW2	23-103-3
1102 BX9	23-103-3
1104 AB3	23-103-3
1104 AQ3	23-103-3
1104 AR7	23-103-3
1104 AT3	23-103-3
1104 AW2	23-103-3
1104 AX9	23-103-3
1104 AY3	23-103-3
1107 AB4	23-103-3
1107 AB8	23-103-3
1107 AQ4	23-103-3
1107 AQ8	23-103-3

MyMopar.com

PART NUMBER	CODE
1107 AR7	23-103-3
1107 AT6	23-103-3
1107 AX9	23-103-3
1107 AY3	23-103-3
1109 AB3	23-103-3
1109 AQ3	23-103-3
1109 AR7	23-103-3
1109 AT3	23-103-3
1109 AX9	23-103-3
1109 AY3	23-103-3
1111 AB3	23-103-3
1111 AQ3	23-103-3
1111 AR7	23-103-3
1111 AT3	23-103-3
1111 AW2	23-103-3
1111 AY3	23-103-3
1112 AB3	23-103-3
1112 AW2	23-103-3
1113 AA2	23-103-3
1113 AA7	23-103-3
1113 AAU	23-103-3
1113 AB4	23-103-3
1113 AQ4	23-103-3
1113 AR5	23-103-3
1113 AT4	23-103-3
1113 AT5	23-103-3
1113 AT6	23-103-3
1113 AW2	23-103-3
1114 AB4	23-103-3
1114 AQ4	23-103-3
1114 AT4	23-103-3
1114 AT6	23-103-3
1114 AW2	23-103-3
1116 AB3	23-103-3
1116 AQ3	23-103-3
1116 AT3	23-103-3
1116 AW2	23-103-3
1116 AX9	23-103-3
1116 AY3	23-103-3
1118 AB3	23-103-3
1118 AQ3	23-103-3
1118 AT3	23-103-3
1118 AW3	23-103-3
1119 AB3	23-103-3
1119 AQ3	23-103-3
1119 AT3	23-103-3
1119 AW2	23-103-3
1119 AX9	23-103-3
1119 AY3	23-103-3
1120 AB4	23-103-3
1120 AQ4	23-103-3
1120 AR5	23-103-3
1120 AR7	23-103-3
1120 AW3	23-103-3
1120 AY3	23-103-3
1120 VR6	23-103-3
1120 VT6	23-103-3
1120 VX9	23-103-3
1121 AAX	23-103-3
1121 AB4	23-103-3
1121 AQ4	23-103-3
1121 AT6	23-103-3
1121 ATY	23-103-3
1121 AWW	23-103-3
1122 AB4	23-103-3
1122 AL3	23-103-3
1122 AM9	23-103-3
1122 AR5	23-103-3
1122 AW3	23-103-3
1122 AX9	23-103-3
1123 AB4	23-103-3
1123 AL3	23-103-3
1123 AM9	23-103-3
1123 AR5	23-103-3
1123 AW3	23-103-3
1123 AX9	23-103-3
1124 AW2	23-103-3
1125 AA2	23-103-3
1125 AB2	23-103-3
1125 AM2	23-103-3
1131 AW2	23-103-3
1160 AAA	23-103-3
1160 AAX	23-103-3
1160 AB4	23-103-3
1160 ALF	23-103-3
1160 AMM	23-103-3
1160 ATL	23-103-3
1160 AWR	23-103-3
1160 AWW	23-103-3
1161 AAA	23-103-3
1161 AAX	23-103-3
1161 AB4	23-103-3
1161 ALF	23-103-3
1161 AMM	23-103-3
1161 ATL	23-103-3
1161 AWR	23-103-3
1161 AWW	23-103-3
1199 AB4	23-103-3
1199 AB8	23-103-3
1199 AR7	23-103-3
1199 AR8	23-103-3
1199 AT6	23-103-3
1199 AW3	23-103-3
1199 AX9	23-103-3
1199 AY3	23-103-3
1202 AB4	23-112-160
1202 AQ4	23-112-160
1202 AR5	23-112-160
1202 AW3	23-112-160
1202 AY3	23-112-160
1202 VR6	23-112-160
1202 VT6	23-112-160
1202 VX9	23-112-160
1203 AB4	23-112-160
1203 AB8	23-112-160
1203 AQ4	23-112-160
1203 AQ8	23-112-160
1203 AR5	23-112-160
1203 AW3	23-112-160
1203 AY8	23-112-160
1203 VR6	23-112-160
1203 VT6	23-112-160
1203 VX9	23-112-160
1204 AB4	23-112-160
1204 AQ4	23-112-160
1204 AR5	23-112-160
1204 AR7	23-112-160
1204 AW3	23-112-160
1204 AY3	23-112-160
1204 VT6	23-112-160
1204 VR6	23-112-160
1204 VX9	23-112-160
1205 AB4	23-112-160
1205 AQ4	23-112-160
1205 AR5	23-112-160
1205 AR7	23-112-160
1205 AW3	23-112-160
1205 AY3	23-112-160
1205 VR6	23-112-160
1205 VT6	23-112-160
1205 VX9	23-112-160
1208 AB4	23-73-9 23-76-9
1208 AQ4	23-76-9
1208 AR5	23-76-9
1208 VR6	23-76-9
1208 VT6	23-76-9
1208 VZ1	23-76-9
1209 AB4	23-73-9 23-76-9
1209 AQ4	23-76-9
1209 AQ9	23-76-9
1209 AR5	23-76-9
1209 VR6	23-76-9
1209 VT6	23-76-9
1209 VZ1	23-76-9
1211 VZ1	23-76-9
1212 VZ1	23-76-9
1213 VZ1	23-76-9
1214 AB4	23-76-63 23-76-76
1214 AB8	23-76-63
1214 AB8	23-76-76
1214 AQ4	23-76-63 23-76-76
1214 AQ8	23-76-63 23-76-76
1214 AR5	23-76-63 23-76-76
1214 AR7	23-76-63 23-76-76
1214 AR8	23-76-63 23-76-76
1214 AT8	23-76-63 23-76-76
1214 AW3	23-76-76
1214 AY3	23-76-63 23-76-76
1214 AY8	23-76-63 23-76-76
1214 VR6	23-76-63 23-76-76
1214 VT6	23-76-63 23-76-76
1214 VX9	23-76-63 23-76-76
1215 AB4	23-76-63 23-76-76
1215 AB4	23-76-76
1215 AB8	23-76-63 23-76-76
1215 AQ4	23-76-63 23-76-76
1215 AQ8	23-76-63 23-76-76
1215 AR5	23-76-63 23-76-76
1215 AR7	23-76-63 23-76-76
1215 AR8	23-76-63 23-76-76
1215 AT8	23-76-63 23-76-76
1215 AW3	23-76-76
1215 AY3	23-76-63 23-76-76
1215 AY8	23-76-63 23-76-76
1215 VR6	23-76-63 23-76-76
1215 VT6	23-76-63 23-76-76
1215 VX9	23-76-63 23-76-76
1216 AB4	23-76-11
1216 AB8	23-76-11
1216 AQ4	23-76-11
1216 AQ8	23-76-11
1216 AR5	23-76-11
1216 AR7	23-76-11
1216 AR8	23-76-11
1216 AT8	23-76-11
1216 AY3	23-76-11
1216 AY8	23-76-11
1216 AR5	23-76-11
1216 AX9	23-76-11
1216 VR6	23-76-11
1216 VT6	23-76-11
1217 AB4	23-76-11
1217 AB8	23-76-11
1217 AQ4	23-76-11
1217 AQ8	23-76-11
1217 AR5	23-76-11
1217 AR7	23-76-11
1217 AR8	23-76-11
1217 AT8	23-76-11
1217 AY3	23-76-11
1217 AY8	23-76-11
1217 VR7	23-76-11
1217 VT6	23-76-11
1220 AB4	23-76-66
1220 AQ4	23-76-66
1220 AR7	23-76-66
1220 AT6	23-76-66
1220 AW3	23-76-66
1220 AX9	23-76-66
1220 AY3	23-76-66
1222 AB4	23-76-11 23-76-76
1222 AQ4	23-76-11 23-76-76
1222 AQ8	23-76-11
1222 AR8	23-76-11
1222 AT5	23-76-11 23-76-76
1222 AT8	23-76-11
1222 AU8	23-76-11 23-76-76
1222 AY3	23-76-11
1222 VR6	23-76-11
1222 VR7	23-76-11
1222 VT6	23-76-11
1222 VT8	23-76-11
1222 VW3	23-76-11
1222 VX9	23-76-11 23-76-76
1222 VY5	23-76-11
1223 AB4	23-76-11 23-76-76
1223 AQ4	23-76-11 23-76-76
1223 AQ8	23-76-11 23-76-76
1223 AR8	23-76-11
1223 AT5	23-76-11 23-76-76
1223 AT8	23-76-11
1223 AU8	23-76-11 23-76-76
1223 AY3	23-76-11
1223 VR6	23-76-11
1223 VR7	23-76-11
1223 VT6	23-76-11
1223 VT8	23-76-11
1223 VW3	23-76-11
1223 VX9	23-76-11 23-76-76
1223 VY5	23-76-11
1224 AB4	23-76-76
1224 AB8	23-76-63 23-76-76
1224 AQ4	23-76-76
1224 AQ8	23-76-63 23-76-76
1224 AR5	23-76-76
1224 AR7	23-76-76
1224 AR8	23-76-63 23-76-76

MyMopar.com

PART NUMBER	CODE
1224 AT8	23-76-63
	23-76-76
1224 AW3	23-76-63
	23-76-76
1224 AY3	23-76-76
1224 VR6	23-76-76
1224 VR6	23-76-76
1224 VX9	23-76-63
	23-76-76
1225 AB4	23-76-76
1225 AB8	23-76-63
	23-76-76
1225 AQ4	23-76-76
1225 AQ8	23-76-63
	23-76-76
1225 AR5	23-76-76
1225 AR7	23-76-76
1225 AR8	23-76-63
	23-76-76
1225 AT8	23-76-63
	23.76-76
1225 AW3	23-76-63
	23-76-76
1225 AY3	23-76-63
	23-76-76
1225 VR6	23-76-76
1225 VT6	23-76-76
1225 VX9	23-76-63
	23-76-76
1230 AB4	23-76-10
1230 AL3	23-76-10
1230 AM9	23-76-10
1230 AQ4	23-76-10
1230 AR5	23-76-10
1230 VF9	23-76-10
1230 VW3	23-76-10
1230 VX9	23-76-10
1231 AB4	23-76-10
1231 AL3	23-76-10
1231 AM9	23-76-10
1231 AQ4	23-76-10
1231 AR5	23-76-10
1231 VF9	23-76-10
1231 VW3	23-76-10
1231 VX9	23-76-10
1234 AA3	23-76-63
1234 AB4	23-76-63
1234 AL3	23-76-63
1234 AM9	23-76-63
1234 AQ4	23-76-63
1234 AR5	23-76-63
1234 VF9	23-76-63
1234 VW3	23-76-63
1234 VX9	23-76-63
1235 AA3	23-76-63
1235 AB4	23-76-63
1235 AL3	23-76-63
1235 AM9	23-76-63
1235 AQ4	23-76-63
1235 AR5	23-76-63
1235 VF9	23-76-63

PART NUMBER	CODE
1235 VW3	23-76-63
1235 VX9	23-76-63
1240 AB4	23-76-63
1240 AL3	23-76-76
1240 AM9	23-76-76
1240 VF9	23-76-76
1240 VR5	23-76-76
1240 VW3	23-76-76
1240 VX9	23-76-76
1241 AB4	23-76-76
1241 AL3	23-76-76
1241 AM9	23-76-76
1241 VF9	23-76-76
1241 VR5	23-76-76
1241 VW3	23-76-76
1241 VX9	23-76-76
1242 AB4	23-76-76
1242 AL3	23-76-76
1242 AM9	23-76-76
1242 VR5	23-76-76
1242 VW3	23-76-76
1242 VX9	23-76-76
1243 AB4	23-76-76
1243 AL3	23-76-76
1243 AM9	23-76-76
1243 VR5	23-76-76
1243 VW3	23-76-76
1243 VX9	23-76-76
1244 AB4	23-112-160
1244 AB8	23-112-160
1244 AQ8	23-112-160
1244 AR7	23-112-160
1244 AR8	23-112-160
1244 AT8	23-112-160
1244 AW3	23-112-160
1244 AX9	23-112-160
1244 AY3	23-112-160
1245 AB4	23-112-160
1245 AB8	23-112-160
1245 AQ8	23-112-160
1245 AR7	23-112-160
1245 AR8	23-112-160
1245 AT8	23-112-160
1245 AW3	23-112-160
1245 AX9	23-112-160
1245 AY3	23-112-160
1300 AT6	23-102-3
1302 AT6	23-102-3
1308 AB4	23-102-3
1308 AL3	23-102-3
1308 AM9	23-102-3
1308 AR5	23-102-3
1308 VF9	23-102-3
1308 VX8	23-102-3
1309 AB4	23-102-3
1309 AM9	23-102-3
1309 AQ4	23-102-3
1309 AR5	23-102-3

PART NUMBER	CODE
1309 VF9	23-102-3
1309 VX8	23-102-3
1311 AT6	23-102-3
1312 AT6	23-102-3
1313 AT6	23-102-3
1314 AT6	23-102-3
1315 AT6	23-102-3
1316 AT6	23-102-3
1317 AT6	23-102-3
1318 AT6	23-102-3
1319 AT6	23-102-3
1402 VX8	23-91-6
1403 VX8	23-91-6
1406 AW3	23-91-6
1407 AW3	23-91-6
1410 AB8	23-86-36
	23-91-6
1410 AQ8	23-86-36
1410 AR5	23-91-6
1410 AR7	23-91-6
1410 AT8	23-91-6
1410 AY3	23-91-6
1410 VR6	23-91-6
1410 VT6	23-91-6
1410 VX9	23-91-6
1411 AB8	23-86-36
	23-91-6
1411 AQ8	23-86-36
	23-91-6
1411 AR5	23-91-6
1411 AR7	23-91-6
1411 AT8	23-91-6
1411 AY3	23-91-6
1411 VR6	23-91-6
1411 VT6	23-91-6
1411 VX9	23-91-6
1414 AB6	23-91-6
1414 AF9	23-91-6
1414 AL6	23-91-6
1414 AM9	23-91-6
1414 AQ6	23-91-6
1414 AR5	23-91-6
1414 AX8	23-91-6
1415 AB6	23-91-6
1415 AF9	23-91-6
1415 AL6	23-91-6
1415 AM9	23-91-6
1415 AQ6	23-91-6
1415 AR5	23-91-6
1415 AX8	23-91-6
1420 AB4	23-91-6
1420 AQ4	23-91-6
1420 AR7	23-91-6
1420 AX9	23-91-6
1421 AB4	23-91-6
1421 AQ4	23-91-6
1421 AR7	23-91-6
1421 AX9	23-91-6
1422 AB8	23-91-6
1422 AQ8	23-91-6

PART NUMBER	CODE
1422 AR8	23-91-6
1422 AT8	23-91-6
1422 AX9	23-91-6
1422 AY8	23-91-6
1423 AB8	23-91-6
1423 AQ8	23-91-6
1423 AR8	23-91-6
1423 AT8	23-91-6
1423 AX9	23-91-6
1423 AY8	23-91-6
1426 AX9	23-91-6
1427 AX9	23-91-6
1428 AX9	23-91-6
1428 AY8	23-91-6
1429 AX9	23-91-6
1430 AB8	23-91-6
1430 AQ8	23-91-6
1430 AR7	23-91-6
1430 AT9	23-91-6
1430 AU8	23-91-6
1430 AX8	23-91-6
1431 AB8	23-91-6
1431 AQ8	23-91-6
1431 AR7	23-91-6
1431 AT9	23-91-6
1431-AU8	23-91-6
1431 AX8	23-91-6
1432 AB8	23-91-6
1432 AQ8	23-91-6
1432 AR7	23-91-6
1432 AX8	23-91-6
1432 AY8	23-91-6
1433 AB8	23-91-6
1433 AQ8	23-91-6
1433 AR7	23-91-6
1433 AX8	23-91-6
1433 AY8	23-91-6
1514 AR5	23-113-45
1515 AB4	23-113-45
1515 AQ4	23-113-45
1515 TR6	23-113-45
1515 VT6	23-113-45
1516 AL3	23-113-25
1516 AR5	23-113-25
1519 VX8	23-63-33
1519 VY3	23-63-33
1520 AY3	23-63-33
1522 AB4	23-63-33
1522 AQ4	23-63-33
1522 AR5	23-63-33
1522 VT6	23-63-33
1524 AB4	23-63-33
1524 AQ4	23-63-33
1524 AR5	23-63-33
1524 AY3	23-63-33
1524 VT6	23-63-33
1526 AR5	23-63-33
1528 AB4	23-63-33
1528 AQ4	23-63-33

PART NUMBER	CODE
1528 AR5	23-63-33
1528 AR7	23-63-33
1528 AY3	23-63-33
1528 VR6	23-63-33
1528 VT6	23-63-33
1528 VX8	23-63-33
1529 AB4	23-63-33
1529 AQ4	23-63-33
1529 AR5	23-63-33
1529 AR7	23-63-33
1529 AY3	23-63-33
1529 VR6	23-63-33
1529 VT6	23-63-33
1529 VX8	23-63-33
1530 AB4	23-63-33
1530 AQ4	23-63-33
1530 AR5	23-63-33
1530 AR7	23-63-33
1530 AY3	23-63-33
1530 TR6	23-63-33
1530 VT6	23-63-33
1530 VX8	23-63-33
1531 AB4	23-63-33
1531 AQ4	23-63-33
1531 AR5	23-63-33
1531 AR7	23-63-33
1531 AY3	23-63-33
1531 TR6	23-63-33
1531 VT6	23-63-33
1531 VX8	23-63-33
1536 AB4	23-113-2
	23-113-30
1536 AB8	23-113-2
	23-113-30
1536 AQ4	23-113-2
	23-113-30
1536 AQ8	23-113-2
1536 AR5	23-113-2
1536 AR8	23-113-2
	23-113-30
1536 AT5	23-113-2
1536 AT6	23-113-2
	23-113-30
1536 AT8	23-113-2
	23-113-30
1536 AU8	23-113-2
1536 AW2	23-113-2
	23-113-30
1536 AX8	23-113-2
	23-113-30
1536 AX9	23-113-2
1536 AY3	23-113-2
	23-113-30
1536 VB4	23-113-25
1536 VF9	23-113-25
1536 VM9	23-113-25
1536 VQ4	23-113-25
1536 VX8	23-113-30
1539 VF9	23-113-30

MyMopar.com

PART NUMBER	CODE
1600 AQ8	23-20-8
1600 AR7	23-20-8
1600 AT8	23-20-8
1601 VX8	23-20-8
1603 AB8	23-20-11
	23-20-41
1603 AQ8	23-20-11
	23-20-41
1603 AR7	23-20-11
	23-20-41
1603 AT8	23-20-11
	23-20-41
1604 AX8	23-20-11
	23-20-41
1607 TXA	23-20-41
1608 TX8	23-20-41
1612 TX8	23-20-41
1612 VB8	23-20-41
1612 VQ8	23-20-41
1612 VR8	23-20-41
1612 VT8	23-20-41
1613 TA7	23-20-29
1614 TA7	23-20-29
1616 TX8	23-20-8
1617 AB8	23-20-41
1617 AQ8	23-20-41
1617 AR7	23-20-41
1617 AT8	23-20-41
1617 TX8	23-20-41
1619 AB8	23-20-11
1619 AQ8	23-20-11
1619 AR7	23-20-11
1619 AT8	23-20-11
1619 AX8	23-20-11
	23-10-41
1626 AX8	23-20-8
1630 AB8	23-79-64
1630 AR8	23-79-64
1630 AT8	23-79-64
1630 AX8	23-79-64
1631 AB8	23-20-41
1631 AQ8	23-20-41
1631 AR7	23-20-41
1631 AT8	23-20-41
1635 AX8	23-20-41
1637 AX8	23-20-11
	23-20-41
1700 AB8	23-79-33
1700 AQ8	23-79-33
1700 AR7	23-79-33
1700 AT9	23-79-33
1700 AU8	23-79-33
1700 AX8	23-79-33
1701 AB8	23-79-33
1701 AQ8	23-79-33
1701 AR7	23-79-33
1701 AX8	23-79-33
1701 AY8	23-79-33
1703 AB8	23-79-33
1703 AQ8	23-79-33
1703 AR7	23-79-33
1703 AT8	23-79-33
1703 AY3	23-79-33
1704 AB8	23-79-33
1704 AQ8	23-79-33
1704 AR7	23-79-33
1704 AT8	23-79-33
1704 AX8	23-79-33
1704 AY3	23-79-33
1704 AB8	23-79-33
1705 AQ8	23-79-33
1705 AR7	23-79-33
1705 AT8	23-79-33
1705 AX8	23-79-33
1705 AY3	23-79-33
1707 AB8	23-79-33
1707 AQ8	23-79-33
1707 AR7	23-79-33
1707 AT8	23-79-33
1708 AQ8	23-79-33
1708 AR7	23-79-33
1708 AT8	23-79-33
1709 AB8	23-79-33
1709 AQ8	23-79-33
1709 AR6	23-79-33
1709 AR7	23-79-33
1709 AT8	23-79-33
1710 AB8	23-79-33
1710 AQ8	23-79-33
1710 AR6	23-79-33
1710 AT8	23-79-33
1711 AB8	23-79-33
1711 AR6	23-79-33
1711 AX8	23-79-33
1711 AY8	23-79-33
1712 AB8	23-79-33
1712 AR6	23-79-33
1712 AX8	23-79-33
1712 AY8	23-79-33
1713 AB8	23-79-33
1713 AR7	23-79-33
1713 AT8	23-79-33
1713 AX8	23-79-33
1713 AY3	23-79-33
1714 AB8	23-79-33
1714 AR7	23-79-33
1714 AT8	23-79-33
1714 AX8	23-79-33
1714 AY3	23-79-33
1717 AB8	23-79-33
1717 AQ8	23-79-33
1717 AR7	23-79-33
1717 AT8	23-79-33
1717 AX8	23-79-33
1717 AY8	23-79-33
1718 AB8	23-79-33
1718 AQ8	23-79-33
1718 AR7	23-79-33
1718 AT8	23-79-33
1718 AX8	23-79-33
1718 AY8	23-79-33
1721 AB8	23-79-33
1721 AQ8	23-79-33
1721 AR7	23-79-33
1721 AR8	23-79-33
1721 AT8	23-79-33
1721 AX8	23-79-33
1721 AY8	23-79-33
1722 AB8	23-79-33
1722 AQ8	23-79-33
1722 AR8	23-79-33
1722 AT8	23-79-33
1722 AX8	23-79-33
1724 AB8	23-79-33
1724 AQ8	23-79-33
1724 AR8	23-79-33
1724 AT8	23-79-33
1724 AX8	23-79-33
1725 AB8	23-79-33
1725 AR8	23-79-33
1725 AT8	23-79-33
1725 AX8	23-79-33
1726 AB8	23-79-33
1726 AR8	23-79-33
1726 AT8	23-79-33
1726 AX8	23-79-33
1730 AR7	23-79-3
1730 AX3	23-79-3
1730 AY3	23-79-3
1730 VQ8	23-79-3
1730 VT8	23-79-3
1731 AB8	23-79-3
1731 AQ8	23-79-3
1731 AR7	23-79-3
1731 AR8	23-79-3
1731 AT8	23-79-3
1731 AX8	23-79-3
1731 AY8	23-79-3
1732 AB8	23-79-3
1732 AQ8	23-79-3
1732 AR7	23-79-3
1732 AR8	23-79-3
1732 AT8	23-79-3
1732 AX8	23-79-3
1732 AY8	23-79-3
1733 AB8	23-79-33
1733 AR8	23-79-33
1733 AT8	23-79-33
1733 AX8	23-79-33
1734 AR7	23-79-3
1734 AX8	23-79-3
1734 AY3	23-79-3
1734 VB8	23-79-3
1734 VQ8	23-79-3
1734 VT8	23-79-3
1736 VB8	23-79-3
1736 VQ8	23-79-3
1736 VT8	23-79-3
1737 AB8	23-79-3
1737 AQ8	23-79-3
1737 AR7	23-79-3
1737 AR8	23-79-3
1737 AT9	23-79-3
1737 AU8	23-79-3
1737 AX8	23-79-3
1737 AY8	23-79-3
1738 AB8	23-79-3
1738 AR8	23-79-3
1738 AT8	23-79-3
1738 AX8	23-79-3
1739 AB8	23-79-33
1739 AR8	23-79-33
1739 AT8	23-79-33
1739 AX8	23-79-33
1741 AB8	23-79-33
1741 AR8	23-79-33
1741 AX8	23-79-33
1744 AB8	23-79-33
1744 AQ8	23-79-33
1744 AR7	23-79-33
1744 AT8	23-79-33
1744 AX8	23-79-33
1744 AY3	23-79-33
1745 AB8	23-79-33
1745 AQ8	23-79-33
1745 AR7	23-79-33
1745 AT8	23-79-33
1745 AX8	23-79-33
1745 AY3	23-79-33
1748 AR7	23-79-3
1748 AX8	23-79-3
1748 AY3	23-79-3
1748 VB8	23-79-3
1748 VQ8	23-79-3
1748 VT8	23-79-3
1749 AR7	23-79-3
1749 AX8	23-79-3
1749 AY3	23-79-3
1749 VB8	23-79-3
1749 VQ8	23-79-3
1749 VT8	23-79-3
1750 AB8	23-79-33
1750 AR6	23-79-33
1750 AX8	23-79-33
1750 AY8	23-79-33
1751 AB6	23-79-33
1751 AF9	23-79-33
1751 AL6	23-79-33
1751 AM9	23-79-33
1751 AR5	23-79-33
1751 AX8	23-79-33
1752 AB6	23-79-33
1752 AL6	23-79-33
1752 AM9	23-79-33
1752 AR5	23-79-33
1752 AX8	23-79-33
1753 AL6	23-79-33
1753 AM9	23-79-33
1753 AR5	23-79-33
1753 VB6	23-79-33
1753 VF9	23-79-33
1753 VQ6	23-79-33
1753 VX8	23-79-33
1754 AL6	23-79-3
1754 AM9	23-79-3
1754 AR5	23-79-3
1754 VB6	23-79-3
1754 VF9	23-79-3
1754 VQ6	23-79-3
1754 VX8	23-79-3
1759 AB8	23-79-3
1759 AR6	23-79-3
1759 AR7	23-79-3
1759 AT8	23-79-3
1759 AX8	23-79-3
1759 AY3	23-79-3
1759 AY8	23-79-3
1760 AB8	23-79-3
1760 AR6	23-79-3
1760 AT8	23-79-3
1760 AX8	23-79-3
1760 AY3	23-79-3
1760 AY8	23-79-3
1761 AB8	23-79-3
1761 AQ8	23-79-3
1761 AR7	23-79-3
1761 AR8	23-79-3
1761 AT9	23-79-3
1761 AU8	23-79-3
1761 AX8	23-79-3
1761 AY8	23-79-3
1762 AB8	23-79-3
1762 AR8	23-79-3
1762 AT8	23-79-3
1762 AX8	23-79-3
1763 AB8	23-79-33
1763 AR8	23-79-33
1763 AT8	23-79-33
1763 AX8	23-79-33
1764 AB8	23-79-3
1764 AQ8	23-79-3
1764 AR6	23-79-3
1764 AR7	23-79-3
1764 AT8	23-79-3
1765 AR5	23-79-33
1765 AX8	23-79-33
1766 AB8	23-79-3
1766 AR6	23-79-3
1766 AR7	23-79-3
1766 AT8	23-79-3
1766 AX8	23-79-3
1766 AY3	23-79-3
1770 AB8	23-79-3
1770 AQ8	23-79-3
1770 AR6	23-79-3
1770 AR7	23-79-3

MyMopar.com

PART NUMBER	CODE
1770 AT8	23-79-3
1800 AB8	23-79-33
1800 AQ8	23-79-33
1800 AR7	23-79-33
1800 AT8	23-79-33
1800 AY8	23-79-33
1801 AB8	23-79-33
1801 AQ8	23-79-33
1801 AR7	23-79-33
1801 AT8	23-79-33
1801 AY8	23-79-33
1802 AB8	23-79-33
1802 AQ8	23-79-33
1802 AR7	23-79-33
1802 AT8	23-79-33
1802 AY8	23-79-33
1803 AB8	23-79-79
1803 AQ8	23-79-79
1803 AR7	23-79-79
1803 AT8	23-79-79
1803 AY8	23-79-79
1804 AB8	23-109-5
1804 AQ8	23-109-5
1804 AR7	23-109-5
1804 AT8	23-109-5
1804 AY8	23-109-5
1805 AB8	23-109-5
1805 AQ8	23-109-5
1805 AR7	23-109-5
1805 AT8	23-109-5
1805 AY8	23-109-5
1806 AB8	23-109-5
1806 AQ8	23-109-5
1806 AR7	23-109-5
1806 AT8	23-109-5
1806 AY8	23-109-5
1807 AB8	23-79-62 23-109-5
1807 AR8	23-79-62 23-109-5
1807 AT8	23-79-62 23-109-5
1807 AX8	23-79-62 23-109-5
1808 AB8	23-109-5
1808 AR8	23-109-5
1808 AT8	23-109-5
1808 AX8	23-109-5
1809 AB8	23-79-79
1809 AR8	23-79-79
1809 AT8	23-79-79
1809 AX8	23-79-79
1810 AB8	23-79-33
1810 AQ8	23-79-33
1810 AR7	23-79-33
1810 AT8	23-79-33
1810 AX9	23-79-33
1810 AY8	23-79-33
1811 AB8	23-109-5
1811 AR8	23-109-5
1811 AT8	23-109-5
1811 AX8	23-109-5
1812 AB8	23-109-5
1812 AR8	23-109-5
1812 AT8	23-109-5
1812 AX8	23-109-5
1813 AB8	23-79-33
1813 AR8	23-79-33
1813 AT8	23-79-33
1813 AX8	23-79-33
1815 AB8	23-108-32 23-109-5
1815 AQ8	23-108-32 23-109-5
1815 AR7	23-108-32 23-109-5
1815 AT8	23-108-32 23-109-5
1815 AX9	23-109-5
1815 AY8	23-108-32 23-109-5
1816 AB8	23-109-5
1816 AQ8	23-109-5
1816 AR7	23-109-5
1816 AT8	23-109-5
1816 AX9	23-109-5
1816 AY8	23-109-5
1819 AB8	23-79-33
1819 AQ8	23-79-33
1819 AR7	23-79-33
1819 AT8	23-79-33
1819 AX9	23-79-33
1819 AY8	23-79-33
1820 AB8	23-79-79
1820 AQ8	23-79-79
1820 AR7	23-79-79
1820 AT8	23-79-79
1820 AX9	23-79-79
1820 AY8	23-79-79
1821 AB8	23-109-5
1821 AQ8	23-109-5
1821 AR7	23-109-5
1821 AR8	23-109-5
1821 AT8	23-109-5
1821 AX9	23-109-5
1821 AY8	23-109-5
1822 AB8	23-109-5
1822 AQ8	23-109-5
1822 AR7	23-109-5
1822 AR8	23-109-5
1822 AT8	23-109-5
1822 AX9	23-109-5
1822 AY8	23-109-5
1823 AB8	23-79-79
1823 AQ8	23-79-79
1823 AR7	23-79-79
1823 AT8	23-79-79
1823 AX9	23-79-79
1823 AY8	23-79-79
1824 AB8	23-79-79
1824 AQ8	23-79-79
1824 AR7	23-79-79
1824 AT8	23-79-79
1824 AX9	23-79-79
1824 AY8	23-79-79
1825 AB8	23-79-62 23-109-5
1825 AQ8	23-79-62 23-109-5
1825 AR7	23-79-62 23-109-5
1825 AR8	23-109-5
1825 AT8	23-79-62 23-109-5
1825 AX9	23-79-62 23-109-5
1825 AY8	23-79-62 23-109-5
1826 AB8	23-109-5
1826 AR8	23-109-5
1826 AT8	23-109-5
1826 AX8	23-109-5
1827 AB8	23-79-79 23-109-5
1827 AR8	23-79-79
1827 AT8	23-79-79
1827 AX8	23-79-79
1828 AB8	23-79-79
1828 AR8	23-79-79
1828 AT8	23-79-33 23-79-79
1828 AX8	23-79-33 23-79-79
1829 AB8	23-79-33
1829 AR8	23-79-33
1903 AL1	23-114-10
1903 TX8	23-114-10
1903 VB1	23-114-10
1903 VW1	23-114-10
1905 AB1	23-112-108
1905 AW1	23-112-108
1905 AX9	23-112-108
1906 AW1	23-112-112
1906 AX9	23-112-112
1907 AW1	23-112-112
1907 AX9	23-112-112
1909 AT6	23-112-12
1910 AB1	23-112-45
1910 AW1	23-112-45
1910 AX9	23-112-45
1911 AB1	23-112-45
1911 AW1	23-112-45
1911 AX9	23-112-45
1913 AW2	23-112-46
1913 AX8	23-112-46
1915 AB4	23-112-12
1915 AQ4	23-112-12
1915 AR5	23-112-12
1915 AR7	23-112-12
1915 AT6	23-112-12
1915 AW3	23-112-12
1915 AX9	23-112-12
1915 AY3	23-112-12
1915 VR6	23-112-12
1915 VT6	23-112-12
1915 VX9	23-112-12
1918 AX8	23-112-46
1918 VW2	23-112-46
1920 AX8	23-112-46
1920 VW2	23-112-46
1922 AB4	23-112-12
1922 AQ4	23-112-12
1922 AR5	23-112-12
1922 AR7	23-112-12
1922 AW3	23-112-12
1922 V4T	23-112-12
1922 V4X	23-112-12
1922 VX9	23-112-12
1923 TX8	23-112-46
1923 VW2	23-112-46
1925 AB1	23-112-45
1925 TX9	23-112-45
1925 VW1	23-112-45
1926 AB1	23-112-45
1926 TX9	23-112-45
1926 VW1	23-112-45
1927 AX9	23-112-45
1927 VB1	23-112-45
1927 VW1	23-112-45
1928 AX9	23-112-45
1929 AB1	23-112-45
1929 AW1	23-112-45
1929 AX9	23-112-45
1930 AB1	23-112-45
1930 AW1	23-112-45
1930 AX9	23-112-45
1931 AB1	23-112-45
1931 AL1	23-112-45
1931 AX9	23-112-45
1931 VW1	23-112-45
1932 AB1	23-112-45
1932 AL1	23-112-45
1932 AX9	23-112-45
1932 VW1	23-112-45
1933 TX8	23-112-50
1933 VW2	23-112-50
1934 TX8	23-112-50
1934 VW2	23-112-50
1935 AB1	23-112-108
1935 AW1	23-112-108
1935 AX9	23-112-108
1936 AB1	23-112-108
1936 AW1	23-112-108
1936 AX9	23-112-108
1937 AB1	23-112-108
1937 AW1	23-112-108
1937 VW1	23-112-108
1937 VX9	23-112-108
1938 AB1	23-112-108
1938 AL1	23-112-108
1938 AW1	23-112-108
1938 AW3	23-112-108
1938 AX9	23-112-108
1939 AB4	23-112-12
1939 AB8	23-112-12
1939 AQ4	23-112-12
1939 AQ8	23-112-12
1939 AR7	23-112-12
1939 AT6	23-112-12
1939 AT8	23-112-12
1939 AW3	23-112-12
1939 AX9	23-112-12
1939 AY3	23-112-12
1940 AB4	23-112-153
1940 AQ4	23-112-153
1940 AR6	23-112-153
1940 AT6	23-112-153
1940 AX9	23-112-153
1940 AY3	23-112-153
1941 AB4	23-112-153
1941 AQ4	23-112-153
1941 AR5	23-112-153
1941 AR7	23-112-153
1941 AW3	23-112-153
1941 VT6	23-112-153
1941 VX9	23-112-153
1942 AB4	23-112-153
1942 AQ4	23-112-153
1942 AR5	23-112-153
1942 AT6	23-112-153
1942 AW3	23-112-153
1942 AY3	23-112-153
1944 AB4	23-112-153
1944 AB8	23-112-153
1944 AQ4	23-112-153
1944 AQ8	23-112-153
1944 AR7	23-112-153
1944 AX9	23-112-153
1944 AY3	23-112-153
1945 VW2	23-113-84
1945 VX8	23-113-84
1946 VB1	23-113-56
1946 VW1	23-113-56
1946 VX9	23-113-56
1947 AB1	23-113-56
1947 AW1	23-113-56
1948 AW1	23-112-112
1948 AX9	23-112-112
1950 VW1	23-112-112
1950 VX9	23-112-112
1951 VW1	23-112-112
1951 VX9	23-112-112
1952 VW1	23-112-112
1952 VX9	23-112-112

MyMopar.com

PART NUMBER	CODE
1953 VW1	23-112-112
1953 VX9	23-112-112
1954 AB4	23-112-12
1954 AQ4	23-112-12
1954 AY3	23-112-12
1954 VR6	23-112-12
1954 VT6	23-112-12
1954 VX9	23-112-12
1955 AB4	23-112-12
1955 AL3	23-112-12
1955 AM9	23-112-12
1955 AR5	23-112-12
1955 AW3	23-112-12
1955 AX9	23-112-12
1956 VW3	23-112-14
1956 VX9	23-112-14
1957 VW3	23-112-14
1957 VX9	23-112-12
	23-112-14
1959 VW2	23-113-84
1959 VX8	23-113-84
1960 AB4	23-112-153
1960 AB8	23-112-153
1960 AQ4	23-112-153
1960 AR7	23-112-153
1960 AT6	23-112-153
1960 AT8	23-112-153
1960 AW3	23-112-153
1960 AX9	23-112-153
1960 AY3	23-112-153
1961 AB4	23-112-153
1961 AL3	23-112-153
1961 AM9	23-112-153
1961 AR5	23-112-153
1961 AW3	23-112-153
1961 AX9	23-112-153
1962 VW2	23-58-3
1963 VW2	23-58-3
1964 VW2	23-58-3
1967 VW2	23-58-3
1968 VW2	23-112-23
1968 VX9	23-112-23
1970 VW2	23-112-88
1970 VX8	23-112-88
1972 AX8	23-112-88
1972 VW2	23-112-88
1973 VX8	23-112-50
1978 AX9	23-58-3
1979 AW2	23-112-88
1979 AX8	23-112-88
1988 AB4	23-112-12
	23-112-14
1988 AL3	23-112-12
	23-112-14
1988 AM9	23-112-12
	23-112-14
1988 AR5	23-112-12
	23-112-14
1989 AB4	23-112-12
	23-112-14
1989 AL3	23-112-12
	23-112-14
1989 AM9	23-112-12
	23-112-14
1989 AR5	23-112-12
	23-112-14
1994 A4B	23-112-153
1994 A4Q	23-112-153
1994 AR7	23-112-153
1994 AT6	23-112-153
1994 AX9	23-112-153
1994 AY3	23-112-153
2000 AT8	23-112-153
2001 AT8	23-112-153
2010 AT6	23-112-153
2011 AT6	23-112-153
2012 VT8	23-101-3
2013 VT8	23-101-3
2014 AB4	23-79-33
2014 AR7	23-79-33
2014 AT6	23-79-33
2014 AW3	23-79-33
2014 AX9	23-79-33
2016 TR6	23-99-38
2016 VB6	23-99-38
2016 VQ6	23-99-38
2016 VT6	23-99-38
2017 TR6	23-99-38
2017 VB6	23-99-38
2017 VQ6	23-99-38
2017 VT6	23-99-38
2018 AR7	23-99-4
	23-101-3
2018 VB6	23-99-4
	23-101-3
2018 VQ6	23-99-4
	23-101-3
2018 VT6	23-99-4
	23-101-3
2019 AR7	23-99-4
	23-101-3
2019 VB6	23-99-4
	23-101-3
2019 VQ6	23-99-4
	23-101-3
2019 VT6	23-99-4
	23-101-3
2020 AY6	23-112-153
2020 VB6	23-112-153
2020 VQ6	23-112-153
2020 VR6	23-112-153
2020 VT6	23-112-153
2020 VX8	23-112-153
2021 AY7	23-112-153
2021 VB6	23-112-153
2021 VQ6	23-112-153
2021 VR6	23-112-153
2021 VT6	23-112-153
2021 VX8	23-112-153
2022 VB6	23-112-153
2022 VQ6	23-112-153
2022 VR6	23-112-153
2022 VT6	23-112-153
2022 VX8	23-112-153
2022 AY6	23-112-153
2023 VB6	23-112-153
2023 VQ6	23-112-153
2023 VR6	23-112-153
2023 VT6	23-112-153
2023 VX8	23-112-153
2023 AY6	23-112-153
2026 AB4	23-96-8
2026 AQ4	23-96-8
2026 AR7	23-96-8
2026 AT6	23-96-8
2026 AX9	23-96-8
2026 AY3	23-96-8
2027 AB4	23-96-8
2027 AQ4	23-96-8
2027 AR7	23-96-8
2027 AT6	23-96-8
2027 AX9	23-96-8
2027 AY3	23-96-8
2028 AA2	23-86-3
2028 AB4	23-86-3
2028 AL2	23-86-3
2028 AM2	23-86-3
2028 AT6	23-86-3
2028 AW2	23-86-3
2029 AA2	23-86-3
2029 AB4	23-86-3
2029 AL2	23-86-3
2029 AM2	23-86-3
2029 AT6	23-86-3
2029 AW2	23-86-3
2030 AA2	23-86-3
2030 AB4	23-86-3
2030 AL2	23-86-3
2030 AT6	23-86-3
2030 AW2	23-86-3
2031 AA2	23-86-3
2031 AB4	23-86-3
2031 AL2	23-86-3
2031 AT6	23-86-3
2031 AW2	23-86-3
2042 AB4	23-96-8
2042 AQ4	23-96-8
2042 AR5	23-96-8
2042 AT6	23-96-8
2042 AY3	23-96-8
2043 AB4	23-96-8
2043 AQ4	23-96-8
2043 AR5	23-96-8
2043 AT6	23-96-8
2043 AY3	23-96-8
2044 VT6	23-101-14
2045 VT6	23-101-14
2046 AA3	23-101-14
2046 AB4	23-101-14
2046 AL3	23-101-14
2046 AM9	23-101-14
2046 AQ4	23-101-14
2046 AR5	23-101-14
2046 VF9	23-101-14
2046 VW3	23-101-14
2046 VX9	23-101-14
2047 AA3	23-101-14
2047 AB4	23-101-14
2047 AL3	23-101-14
2047 AM9	23-101-14
2047 AQ4	23-101-14
2047 AR5	23-101-14
2047 VF9	23-101-14
2047 VW3	23-101-14
2047 VX9	23-101-14
2049 AB3	23-86-3
2052 AB3	23-86-3
2052 AQ3	23-86-3
2052 AT3	23-86-3
2052 AW2	23-86-3
2052 AW3	23-86-3
2052 AX9	23-86-3
2052 AY3	23-86-3
2053 AB3	23-86-3
2053 AQ3	23-86-3
2053 AT3	23-86-3
2053 AW2	23-86-3
2053 AW3	23-86-3
2053 AX9	23-86-3
2053 AY3	23-86-3
2054 AT6	23-101-3
2055 AT6	23-101-3
2056 VT6	23-96-8
2057 VT6	23-96-8
2058 VT6	23-96-8
2059 VT6	23-96-8
2060 AB4	23-101-3
2060 AQ4	23-101-3
2060 AR7	23-101-3
2060 AT6	23-101-3
2060 AX9	23-101-3
2060 AY3	23-101-3
2061 AB4	23-101-3
2061 AQ4	23-101-3
2061 AR7	23-101-3
2061 AT6	23-101-3
2061 AX9	23-101-3
2061 AY3	23-101-3
2062 AB4	23-101-3
2062 AQ4	23-101-3
2062 AR7	23-101-3
2062 AT6	23-101-3
2062 AY3	23-101-3
2063 AB4	23-101-3
2063 AQ4	23-101-3
2063 AR7	23-101-3
2063 AT6	23-101-3
2063 AY3	23-101-3
2064 AB4	23-101-3
2064 AQ4	23-101-3
2064 AR7	23-101-3
2064 AT6	23-101-3
2064 AY3	23-101-3
2065 AB4	23-101-3
2065 AQ4	23-101-3
2065 AR7	23-101-3
2065 AT6	23-101-3
2065 AY3	23-101-3
2066 AB4	23-101-3
2066 AQ4	23-101-3
2066 AR7	23-101-3
2066 AT6	23-101-3
2066 AX9	23-101-3
2066 AY3	23-101-3
2067 AB4	23-101-3
2067 AQ4	23-101-3
2067 AR7	23-101-3
2067 AT6	23-101-3
2067 AX9	23-101-3
2067 AY3	23-101-3
2068 AB8	23-101-3
2068 AQ8	23-101-3
2068 AR7	23-101-3
2068 AT8	23-101-3
2068 AW3	23-101-3
2069 AB8	23-101-3
2069 AQ8	23-101-3
2069 AR7	23-101-3
2069 AT8	23-101-3
2069 AW3	23-101-3
2070 AB4	23-101-3
2070 AB8	23-101-3
2070 AQ4	23-101-3
2070 AQ8	23-101-3
2070 AR7	23-101-3
2070 AT6	23-101-3
2070 AT8	23-101-3
2070 AW3	23-101-3
2070 AY3	23-101-3
2071 AB4	23-101-3
2071 AB8	23-101-3
2071 AQ4	23-101-3
2071 AQ8	23-101-3
2071 AR7	23-101-3
2071 AT6	23-101-3
2071 AT8	23-101-3
2071 AW3	23-101-3
2071 AY3	23-101-3
2072 AB4	23-101-3
2072 AQ4	23-101-3
2072 AR7	23-101-3
2072 AT6	23-101-3
2072 AW3	23-101-3
2072 AY3	23-101-3

MyMopar.com

PART NUMBER	CODE
2073 AB4	23-101-3
2073 AQ4	23-101-3
2073 AR7	23-101-3
2073 AT6	23-101-3
2073 AW3	23-101-3
2073 AY3	23-101-3
2074 AB4	23-101-3
2074 AB8	23-101-3
2074 AR7	23-101-3
2074 AR8	23-101-3
2074 AT8	23-101-3
2074 AW3	23-101-3
2074 AX9	23-101-3
2074 AY3	23-101-3
2075 AB4	23-101-3
2075 AB8	23-101-3
2075 AR7	23-101-3
2075 AR8	23-101-3
2075 AT8	23-101-3
2075 AW3	23-101-3
2075 AX9	23-101-3
2075 AY3	23-101-3
2084 AT6	23-112-153
2085 AT6	23-112-153
2086 AQ4	23-79-33
2086 AY3	23-79-33
2087 AQ4	23-79-33
2087 AY3	23-79-33
2088 AB4	23-79-33
2088 AR7	23-79-33
2088 AT6	23-79-33
2088 AW3	23-79-33
2088 AX9	23-79-33
2089 AB4	23-79-33
2089 AR7	23-79-33
2089 AT6	23-79-33
2089 AW3	23-79-33
2089 AX9	23-79-33
2090 AB3	23-86-3
2090 AQ3	23-86-3
2090 AR7	23-86-3
2090 AT3	23-86-3
2090 AT7	23-86-3
2090 AU7	23-86-3
2090 AW2	23-86-3
2090 AW3	23-86-3
2090 AX9	23-86-3
2090 AY3	23-86-3
2091 AB3	23-86-3
2091 AQ3	23-86-3
2091 AR7	23-86-3
2091 AT3	23-86-3
2091 AT7	23-86-3
2091 AU7	23-86-3
2091 AW2	23-86-3
2091 AW3	23-86-3
2091 AX9	23-86-3
2091 AY3	23-86-3
2094 AA2	23-86-3
2094 AB4	23-86-3
2094 AQ4	23-86-3
2094 AR5	23-86-3
2094 AT6	23-86-3
2095 AA2	23-86-3
2095 AB4	23-86-3
2095 AQ4	23-86-3
2095 AR5	23-86-3
2095 AT6	23-86-3
2096 AB4	23-86-3
2096 AA2	23-86-3
2096 AQ4	23-86-3
2096 AR5	23-86-3
2097 AA2	23-86-3
2097 AB4	23-86-3
2097 AQ4	23-86-3
2097 AR5	23-86-3
2122 AQQ	23-92-5
2466 ALL	23-92-5
2467 ALL	23-92-5
2708 AT8	23-47-8
2709 AT8	23-47-8
2714 AB4	23-108-98
2714 AB8	23-108-98
2714 AR7	23-108-98
2714 AT6	23-108-98
2714 AT8	23-108-98
2714 AW3	23-108-98
2714 AX9	23-108-98
2714 AY3	23-108-98
2715 AB4	23-108-98
2715 AB8	23-108-98
2715 AT6	23-108-98
2715 AT8	23-108-98
2715 AW3	23-108-98
2715 AX9	23-108-98
2715 AY3	23-108-98
2717 AX9	23-108-22
2718 AB4	23-108-98
2718 AL3	23-108-98
2718 AM9	23-108-98
2718 AR5	23-108-98
2718 VW3	23-108-98
2718 VX8	23-108-98
2719 AB4	23-108-98
2719 AL3	23-108-98
2719 AM9	23-108-98
2719 AR5	23-108-98
2719 VW3	23-108-98
2719 VX8	23-108-98
2720 AB4	23-108-98
2720 AL3	23-108-98
2720 AM9	23-108-98
2720 AR5	23-108-98
2720 VF9	23-108-98
2720 VW3	23-108-98
2720 VX8	23-108-98
2721 AB4	23-108-98
2721 AL3	23-108-98
2721 AM9	23-108-98
2721 AR5	23-108-98
2721 VF9	23-108-98
2721 VW3	23-108-98
2721 VX8	23-108-98
2722 AB4	23-108-98
2722 AF9	23-108-98
2722 AL3	23-108-98
2722 AM9	23-108-98
2722 AR5	23-108-98
2722 VW3	23-108-98
2722 VX8	23-108-98
2723 AB4	23-108-98
2723 AL3	23-108-98
2723 AM9	23-108-98
2723 AR5	23-108-98
2723 VF9	23-108-98
2723 VW3	23-108-98
2723 VX8	23-108-98
2724 VF9	23-108-98
2725 VF9	23-108-98
2728 VX8	23-108-22
2730 AB4	23-108-98
2730 AR7	23-108-98
2730 AT6	23-108-98
2730 AX9	23-108-98
2730 AY3	23-108-98
2731 AB4	23-108-98
2731 AR7	23-108-98
2731 AT6	23-108-98
2731 AX9	23-108-98
2731 AY3	23-108-98
2808 VT4	23-99-4
2809 VT4	23-99-4
2810 AT6	23-79-79 23-99-41
2811 AT6	23-79-79 23-99-41
2812 AT6	23-79-79 23-99-41
2951 AX8	23-96-3
2951 VB8	23-96-3
2951 VR6	23-96-3
2951 VY8	23-96-3
3100 ABB	23-92-5
3100 AQQ	23-92-5
3100 ARR	23-92-5
3100 AXW	23-92-5
3101 ABB	23-92-5
3102 ABB	23-92-5
3102 AOX	23-92-5
3102 AQQ	23-92-5
3102 ARR	23-92-5
3102 ATT	23-92-5
3102 AXW	23-92-5
3102 AXY	23-92-5
3103 ABB	23-92-5
3103 AOX	23-92-5
3103 AQQ	23-92-5
3103 ARR	23-92-5
3103 ATT	23-92-5
3103 AXW	23-92-5
3103 AXY	23-92-5
3104 ABB	23-92-5
3104 AOX	23-92-5
3104 AQQ	23-92-5
3104 ARR	23-92-5
3104 ATT	23-92-5
3104 AXW	23-92-5
3104 AXY	23-92-5
3105 ABB	23-92-5
3105 AOX	23-92-5
3105 AQQ	23-92-5
3105 ARR	23-92-5
3105 ATT	23-92-5
3105 AXW	23-92-5
3105 AXY	23-92-5
3106 ABB	23-92-5
3106 AOW	23-92-5
3106 AOX	23-92-5
3106 ARR	23-92-5
3106 ATT	23-92-5
3106 AXW	23-92-5
3107 ABB	23-92-5
3107 AOW	23-92-5
3107 AOX	23-92-5
3107 ARR	23-92-5
3107 ATT	23-92-5
3107 AXW	23-92-5
3108 ABB	23-92-5
3108 AOW	23-92-5
3108 AOX	23-92-5
3108 ARR	23-92-5
3108 ATT	23-92-5
3108 AXY	23-92-5
3109 ABB	23-92-5
3109 AOW	23-92-5
3109 AOX	23-92-5
3109 ARR	23-92-5
3109 ATT	23-92-5
3109 AXY	23-92-5
3112 ABB	23-92-5
3112 AQQ	23-92-5
3112 ARR	23-92-5
3112 ATT	23-92-5
3112 AXW	23-92-5
3112 AXX	23-92-5
3112 AXY	23-92-5
3113 ABB	23-92-5
3113 AQQ	23-92-5
3113 ARR	23-92-5
3113 ATT	23-92-5
3113 AXW	23-92-5
3113 AXX	23-92-5
3113 AXY	23-92-5
3114 ABB	23-92-5
3114 AQQ	23-92-5
3114 ARR	23-92-5
3114 ATT	23-92-5
3114 AXW	23-92-5
3114 AXX	23-92-5
3114 AXY	23-92-5
3115 ABB	23-92-5
3115 AQQ	23-92-5
3115 ARR	23-92-5
3115 ATT	23-92-5
3115 AXW	23-92-5
3115 AXX	23-92-5
3115 AXY	23-92-5
3116 ABB	23-92-5
3116 AQQ	23-92-5
3116 ARR	23-92-5
3116 ATT	23-92-5
3116 AXW	23-92-5
3116 AXX	23-92-5
3116 AXY	23-92-5
3117 ABB	23-92-5
3117 AQQ	23-92-5
3117 ARR	23-92-5
3117 ATT	23-92-5
3117 AXW	23-92-5
3117 AXX	23-92-5
3117 AXY	23-92-5
3118 ABB	23-92-5
3118 AQQ	23-92-5
3118 ARR	23-92-5
3118 ATT	23-92-5
3118 AYY	23-92-5
3119 ABB	23-92-5
3119 AQQ	23-92-5
3119 ARR	23-92-5
3119 ATT	23-92-5
3119 AYY	23-92-5
3120 ABB	23-92-5
3120 AOR	23-92-5
3120 AQQ	23-92-5
3120 ATT	23-92-5
3121 ABB	23-92-5
3121 AOR	23-92-5
3121 AQQ	23-92-5
3121 ATT	23-92-5
3122 ABB	23-92-5
3122 ARR	23-92-5
3122 ATT	23-92-5
3122 AXW	23-92-5
3122 AXX	23-92-5
3122 AXY	23-92-5
3123 ABB	23-92-5
3123 ARR	23-92-5
3123 ATT	23-92-5
3123 AXW	23-92-5
3123 AXX	23-92-5
3123 AXY	23-92-5
3124 ABB	23-92-5
3124 AQQ	23-92-5
3124 ARR	23-92-5
3124 ATT	23-92-5
3124 AXW	23-92-5

MyMopar.com

PART NUMBER	CODE
3124 AXX	23-92-5
3124 AXY	23-92-5
3125 ABB	23-92-5
3125 AQQ	23-92-5
3125 ARR	23-92-5
3125 ATT	23-92-5
3125 AXW	23-92-5
3125 AXX	23-92-5
3125 AXY	23-92-5
3126 ABB	23-92-5
3126 AQQ	23-92-5
3126 ARR	23-92-5
3126 ATT	23-92-5
3126 AXW	23-92-5
3126 AXX	23-92-5
3126 AXY	23-92-5
3127 ABB	23-92-5
3127 AQQ	23-92-5
3127 ARR	23-92-5
3127 ATT	23-92-5
3127 AXW	23-92-5
3127 AXX	23-92-5
3127 AXY	23-92-5
3128 ABB	23-92-5
3128 AOX	23-92-5
3128 ARR	23-92-5
3128 ATT	23-92-5
3129 ABB	23-92-5
3129 AOX	23-92-5
3129 ARR	23-92-5
3129 ATT	23-92-5
3130 ABB	23-92-5
3130 AOR	23-92-5
3130 AQQ	23-92-5
3130 ATT	23-92-5
3131 ABB	23-92-5
3131 AOR	23-92-5
3131 AQQ	23-92-5
3131 ATT	23-92-5
3132 ABB	23-92-5
3132 AQQ	23-92-5
3132 ARR	23-92-5
3132 ATT	23-92-5
3133 ABB	23-92-5
3133 AQQ	23-92-5
3133 ARR	23-92-5
3133 ATT	23-92-5
3138 ABB	23-92-5
3138 AOX	23-92-5
3138 AQQ	23-92-5
3138 ARR	23-92-5
3138 AYY	23-92-5
3139 ABB	23-92-5
3139 AOX	23-92-5
3139 AQQ	23-92-5
3139 ARR	23-92-5
3139 AYY	23-92-5
3140 ABB	23-92-5
3140 AQQ	23-92-5
3140 ARR	23-92-5
3140 ATT	23-92-5
3141 ABB	23-92-5
3141 AQQ	23-92-5
3141 ARR	23-92-5
3141 ATT	23-92-5
3144 ABB	23-92-5
3144 AQQ	23-92-5
3144 ARR	23-92-5
3144 ATT	23-92-5
3145 ABB	23-92-5
3145 AQQ	23-92-5
3145 ARR	23-92-5
3145 ATT	23-92-5
3146 ABB	23-92-5
3146 AQQ	23-92-5
3146 ARR	23-92-5
3146 ATT	23-92-5
3146 AXX	23-92-5
3146 AYW	23-92-5
3147 ABB	23-92-5
3147 AQQ	23-92-5
3147 ARR	23-92-5
3147 ATT	23-92-5
3147 AXX	23-92-5
3147 AYW	23-92-5
3150 ABB	23-92-5
3150 AQQ	23-92-5
3150 ARR	23-92-5
3150 ATT	23-92-5
3151 ABB	23-92-5
3151 AQQ	23-92-5
3151 ARR	23-92-5
3151 ATT	23-92-5
3152 ABB	23-92-5
3152 AQQ	23-92-5
3152 ARR	23-92-5
3152 ATT	23-92-5
3153 ABB	23-92-5
3153 AQQ	23-92-5
3153 ARR	23-92-5
3153 ATT	23-92-5
3154 ABB	23-92-5
3154 AOR	23-92-5
3154 AQQ	23-92-5
3154 ATT	23-92-5
3155 ABB	23-92-5
3155 AOR	23-92-5
3155 AQQ	23-92-5
3155 ATT	23-92-5
3160 ABB	23-92-5
3160 ARR	23-92-5
3160 ATT	23-92-5
3160 AXX	23-92-5
3160 AYW	23-92-5
3161 ABB	23-92-5
3161 ARR	23-92-5
3161 ATT	23-92-5
3161 AYW	23-92-5
3162 ABB	23-92-5
3162 ARR	23-92-5
3162 ATT	23-92-5
3163 ABB	23-92-5
3163 ARR	23-92-5
3163 ATT	23-92-5
3164 ABB	23-92-5
3164 AQQ	23-92-5
3164 ARR	23-92-5
3164 ATT	23-92-5
3165 ABB	23-92-5
3165 AQQ	23-92-5
3165 ARR	23-92-5
3165 ATT	23-92-5
3166 ABB	23-92-5
3166 ARR	23-92-5
3166 ATT	23-92-5
3167 ABB	23-92-5
3167 ARR	23-92-5
3167 ATT	23-92-5
3170 ARR	23-92-5
3170 AQQ	23-92-5
3170 ARR	23-92-5
3170 ATT	23-92-5
3171 ABB	23-92-5
3171 AQQ	23-92-5
3171 ARR	23-92-5
3171 ATT	23-92-5
3172 AOB	23-92-5
3172 VOR	23-92-5
3172 VOX	23-92-5
3172 VOY	23-92-5
3173 AOB	23-92-5
3173 VOR	23-92-5
3173 VOX	23-92-5
3173 VOY	23-92-5
3174 ABB	23-92-5
3174 AQQ	23-92-5
3174 ARR	23-92-5
3174 ATT	23-92-5
3174 AXW	23-92-5
3174 AXY	23-92-5
3175 ABB	23-92-5
3175 AQQ	23-92-5
3175 ARR	23-92-5
3175 ATT	23-92-5
3175 AXW	23-92-5
3175 AXY	23-92-5
3176 ABB	23-92-5
3176 AQQ	23-92-5
3176 ARR	23-92-5
3176 ATT	23-92-5
3176 AYY	23-92-5
3177 ABB	23-92-5
3177 AQQ	23-92-5
3177 ARR	23-92-5
3177 ATT	23-92-5
3177 AYY	23-92-5
3180 ABB	23-92-5
3180 ARR	23-92-5
3180 ATT	23-92-5
3181 ABB	23-92-5
3181 ARR	23-92-5
3181 ATT	23-92-5
3182 ABB	23-92-5
3182 ARR	23-92-5
3182 ATT	23-92-5
3183 ABB	23-92-5
3183 ARR	23-92-5
3183 ATT	23-92-5
3188 ABB	23-92-5
3188 AOX	23-92-5
3188 AQQ	23-92-5
3188 ARR	23-92-5
3188 AYY	23-92-5
3189 ABB	23-92-5
3189 AOX	23-92-5
3189 AQQ	23-92-5
3189 ARR	23-92-5
3189 AYY	23-92-5
3190 ABB	23-92-5
3190 AOX	23-92-5
3190 AQQ	23-92-5
3190 ARR	23-92-5
3190 ATT	23-92-5
3190 AYY	23-92-5
3191 ABB	23-92-5
3191 AOX	23-92-5
3191 AQQ	23-92-5
3191 ARR	23-92-5
3191 ATT	23-92-5
3191 AYY	23-92-5
3194 ABB	23-92-5
3194 AOR	23-92-5
3194 ATT	23-92-5
3194 AXX	23-92-5
3194 AYW	23-92-5
3195 ABB	23-92-5
3195 AOR	23-92-5
3195 ATT	23-92-5
3195 AXX	23-92-5
3195 AYW	23-92-5
3200 ABB	23-92-5
3200 AQQ	23-92-5
3200 ARR	23-92-5
3200 ATT	23-92-5
3200 AXW	23-92-5
3200 AXY	23-92-5
3201 ABB	23-92-5
3201 AQQ	23-92-5
3201 ARR	23-92-5
3201 ATT	23-92-5
3201 AXW	23-92-5
3201 AXY	23-92-5
3202 ABB	23-92-5
3202 AQQ	23-92-5
3202 ARR	23-92-5
3202 ATT	23-92-5
3202 AXW	23-92-5
3202 AXY	23-92-5
3203 ABB	23-92-5
3203 AQQ	23-92-5
3203 ARR	23-92-5
3203 ATT	23-92-5
3203 AXW	23-92-5
3203 AXY	23-92-5
3204 ABB	23-92-5
3204 AOX	23-92-5
3204 ARR	23-92-5
3204 ATT	23-92-5
3204 AXX	23-92-5
3205 ABB	23-92-5
3205 AOX	23-92-5
3205 ARR	23-92-5
3205 ATT	23-92-5
3205 AXX	23-92-5
3206 ABB	23-92-5
3206 AOW	23-92-5
3206 AOX	23-92-5
3206 ARR	23-92-5
3206 ATT	23-92-5
3206 AXW	23-92-5
3207 ABB	23-92-5
3207 AOW	23-92-5
3207 AOX	23-92-5
3207 ARR	23-92-5
3207 ATT	23-92-5
3207 AXW	23-92-5
3208 ABB	23-92-5
3208 AQQ	23-92-5
3208 ARR	23-92-5
3208 ATT	23-92-5
3208 AXW	23-92-5
3208 AXX	23-92-5
3208 AXY	23-92-5
3209 ABB	23-92-5
3209 AQQ	23-92-5
3209 ARR	23-92-5
3209 ATT	23-92-5
3209 AXW	23-92-5
3209 AXX	23-92-5
3209 AXY	23-92-5
3210 ABB	23-92-5
3210 AQQ	23-92-5
3210 ARR	23-92-5
3210 ATT	23-92-5
3210 AXW	23-92-5
3210 AXX	23-92-5
3210 AXY	23-92-5
3211 ABB	23-92-5
3211 AQQ	23-92-5
3211 ARR	23-92-5
3211 ATT	23-92-5
3211 AXW	23-92-5
3211 AXX	23-92-5
3211 AXY	23-92-5
3216 ABB	23-92-5

MyMopar.com

PART NUMBER	CODE
3216 AOR	23-92-5
3216 ARR	23-92-5
3216 ATT	23-92-5
3217 ABB	23-92-5
3217 AOR	23-92-5
3217 ARR	23-92-5
3217 ATT	23-92-5
3218 ABB	23-92-5
3218 AQQ	23-92-5
3218 ARR	23-92-5
3218 ATT	23-92-5
3218 AYY	23-92-5
3219 ABB	23-92-5
3219 AQQ	23-92-5
3219 ARR	23-92-5
3219 ATT	23-92-5
3219 AYY	23-92-5
3220 ABB	23-92-5
3220 AQQ	23-92-5
3220 ARR	23-92-5
3220 ATT	23-92-5
3220 AXW	23-92-5
3220 AXX	23-92-5
3220 AXY	23-92-5
3221 ABB	23-92-5
3221 AQQ	23-92-5
3221 ARR	23-92-5
3221 ATT	23-92-5
3221 AXW	23-92-5
3221 AXX	23-92-5
3221 AXY	23-92-5
3222 ABB	23-92-5
3222 AQQ	23-92-5
3222 ARR	23-92-5
3222 ATT	23-92-5
3222 AXW	23-92-5
3222 AXX	23-92-5
3222 AXY	23-92-5
3223 ABB	23-92-5
3223 AQQ	23-92-5
3223 ARR	23-92-5
3223 ATT	23-92-5
3223 AXW	23-92-5
3223 AXX	23-92-5
3223 AXY	23-92-5
3224 ABB	23-92-5
3224 AOR	23-92-5
3224 AQQ	23-92-5
3224 ATT	23-92-5
3225 ABB	23-92-5
3225 AOR	23-92-5
3225 AQQ	23-92-5
3225 ATT	23-92-5
3228 ABB	23-92-5
3228 AQQ	23-92-5
3228 ARR	23-92-5
3228 ATT	23-92-5
3229 ABB	23-92-5
3229 AQQ	23-92-5
3229 ARR	23-92-5
3229 ATT	23-92-5
3234 ABB	23-92-5
3234 AQQ	23-92-5
3234 ARR	23-92-5
3234 ATT	23-92-5
3235 ABB	23-92-5
3235 AQQ	23-92-5
3235 ARR	23-92-5
3235 ATT	23-92-5
3240 ABB	23-92-5
3240 ARR	23-92-5
3240 ATT	23-92-5
3241 ABB	23-92-5
3241 ARR	23-92-5
3241 ATT	23-92-5
3242 ABB	23-92-5
3242 AQQ	23-92-5
3242 ARR	23-92-5
3242 ATT	23-92-5
3243 ABB	23-92-5
3243 AQQ	23-92-5
3243 ARR	23-92-5
3243 ATT	23-92-5
3248 ABB	23-92-5
3248 AQQ	23-92-5
3248 ARR	23-92-5
3248 ATT	23-92-5
3248 AYY	23-92-5
3249 ABB	23-92-5
3249 AQQ	23-92-5
3249 ARR	23-92-5
3249 ATT	23-92-5
3249 AYY	23-92-5
3252 ABB	23-92-5
3252 ARR	23-92-5
3252 ATT	23-92-5
3253 ABB	23-92-5
3253 ARR	23-92-5
3253 ATT	23-92-5
3266 ABB	23-92-5
3266 ABW	23-92-5
3266 ALL	23-92-5
3266 AOF	23-92-5
3266 AOM	23-92-5
3266 AOR	23-92-5
3266 AOX	23-92-5
3266 AQQ	23-92-5
3266 ARW	23-92-5
3266 AXW	23-92-5
3267 ABB	23-92-5
3267 ABW	23-92-5
3267 ALL	23-92-5
3267 AOF	23-92-5
3267 AOM	23-92-5
3267 AOR	23-92-5
3267 AOX	23-92-5
3267 AQQ	23-92-5
3267 ARW	23-92-5
3267 AXW	23-92-5
3268 AAX	23-92-5
3268 ABB	23-92-5
3268 ALL	23-92-5
3268 AOF	23-92-5
3268 AOR	23-92-5
3268 ARW	23-92-5
3268 AXW	23-92-5
3269 AXX	23-92-5
3269 ABB	23-92-5
3269 ALL	23-92-5
3269 AOF	23-92-5
3269 AOR	23-92-5
3269 ARW	23-92-5
3269 AXW	23-92-5
3270 ABB	23-92-5
3270 AOR	23-92-5
3270 ATT	23-92-5
3271 ABB	23-92-5
3271 AOR	23-92-5
3271 ATT	23-92-5
3272 ABB	23-92-5
3272 AQQ	23-92-5
3272 ARR	23-92-5
3272 ATT	23-92-5
3272 AYY	23-92-5
3273 AQQ	23-92-5
3273 ARR	23-92-5
3273 ATT	23-92-5
3273 AYY	23-92-5
3274 ABB	23-92-5
3274 AQQ	23-92-5
3274 ARR	23-92-5
3275 ABB	23-92-5
3275 AQQ	23-92-5
3275 ARR	23-92-5
3276 ABB	23-92-5
3276 AOX	23-92-5
3276 AQQ	23-92-5
3276 ARR	23-92-5
3276 ATT	23-92-5
3276 AYY	23-92-5
3277 ABB	23-92-5
3277 AOX	23-92-5
3277 AQQ	23-92-5
3277 ARR	23-92-5
3277 ATT	23-92-5
3277 AYY	23-92-5
3278 ABB	23-92-5
3278 AOX	23-92-5
3278 AQQ	23-92-5
3278 ARR	23-92-5
3278 ATT	23-92-5
3278 AYY	23-92-5
3279 ABB	23-92-5
3279 AOX	23-92-5
3279 AQQ	23-92-5
3279 ARR	23-92-5
3279 ATT	23-92-5
3279 AYY	23-92-5
3282 ABB	23-92-5
3282 AQQ	23-92-5
3282 ARR	23-92-5
3282 ATT	23-92-5
3282 AYY	23-92-5
3283 ABB	23-92-5
3283 AQQ	23-92-5
3283 ARR	23-92-5
3283 ATT	23-92-5
3283 AYY	23-92-5
3284 ABB	23-92-5
3284 AQQ	23-92-5
3284 ARR	23-92-5
3284 ATT	23-92-5
3284 AYY	23-92-5
3285 ABB	23-92-5
3285 AQQ	23-92-5
3285 ARR	23-92-5
3285 ATT	23-92-5
3285 AYY	23-92-5
3286 ABB	23-92-5
3286 AOX	23-92-5
3286 AQQ	23-92-5
3286 ARR	23-92-5
3286 ATT	23-92-5
3287 ABB	23-92-5
3287 AOX	23-92-5
3287 AQQ	23-92-5
3287 ARR	23-92-5
3287 ATT	23-92-5
3288 ABB	23-92-5
3288 AQQ	23-92-5
3288 ARR	23-92-5
3288 ATT	23-92-5
3288 AYY	23-92-5
3289 ABB	23-92-5
3289 AQQ	23-92-5
3289 ARR	23-92-5
3289 ATT	23-92-5
3289 AYY	23-92-5
3290 ABB	23-92-5
3290 AOR	23-92-5
3290 ATT	23-92-5
3291 ABB	23-92-5
3291 AOR	23-92-5
3291 ATT	23-92-5
3292 ABB	23-92-5
3292 AQQ	23-92-5
3292 ARR	23-92-5
3293 ABB	23-92-5
3293 AQQ	23-92-5
3293 ARR	23-92-5
3300 ABB	23-101-3
3300 AOX	23-101-3
3300 AQQ	23-101-3
3300 ARR	23-101-3
3300 ATT	23-101-3
3300 AXW	23-101-3
3300 AXY	23-101-3
3301 ABB	23-101-3
3301 AOX	23-101-3
3301 AQQ	23-101-3
3301 ARR	23-101-3
3301 ATT	23-101-3
3301 AXW	23-101-3
3301 AXY	23-101-3
3302 ABB	23-101-3
3302 AOX	23-101-3
3302 ARR	23-101-3
3302 ATT	23-101-3
3302 AXY	23-101-3
3303 ABB	23-101-3
3303 AOX	23-101-3
3303 ARR	23-101-3
3303 ATT	23-101-3
3303 AXY	23-101-3
3304 ABB	23-101-3
3304 AOW	23-101-3
3304 AOX	23-101-3
3304 ARR	23-101-3
3304 ATT	23-101-3
3304 AXY	23-101-3
3305 ABB	23-101-3
3305 AOW	23-101-3
3305 AOX	23-101-3
3305 ARR	23-101-3
3305 ATT	23-101-3
3305 AXY	23-101-3
3306 ABB	23-101-3
3306 AOW	23-101-3
3306 AOX	23-101-3
3306 ARR	23-101-3
3306 ATT	23-101-3
3306 AXY	23-101-3
3307 ABB	23-101-3
3307 AOW	23-101-3
3307 AOX	23-101-3
3307 ARR	23-101-3
3307 ATT	23-101-3
3307 AXY	23-101-3
3310 AOU	23-101-3
3310 AOX	23-101-3
3310 ARR	23-101-3
3310 ATT	23-101-3
3311 AOU	23-101-3
3311 AOX	23-101-3
3311 ARR	23-101-3
3311 ATT	23-101-3
3312 ABB	23-101-3
3312 AOX	23-101-3
3312 AQQ	23-101-3
3312 ARR	23-101-3
3312 ATT	23-101-3
3313 ABB	23-101-3
3313 AOX	23-101-3
3313 AQQ	23-101-3

MyMopar.com

PART NUMBER	CODE
3313 ARR	23-101-3
3313 ATT	23-101-3
3314 ABB	23-101-3
3314 AOR	23-101-3
3314 AQQ	23-101-3
3314 ATT	23-101-3
3315 ABB	23-101-3
3315 AOR	23-101-3
3315 AQQ	23-101-3
3315 ATT	23-101-3
3316 ABB	23-101-3
3316 AQQ	23-101-3
3316 ARR	23-101-3
3316 ATT	23-101-3
3316 AXW	23-101-3
3316 AXY	23-101-3
3317 ABB	23-101-3
3317 AQQ	23-101-3
3317 ARR	23-101-3
3317 ATT	23-101-3
3317 AXW	23-101-3
3317 AXY	23-101-3
3318 ABB	23-101-3
3318 AQQ	23-101-3
3318 ARR	23-101-3
3318 ATT	23-101-3
3318 AXW	23-101-3
3318 AXX	23-101-3
3318 AXY	23-101-3
3319 ABB	23-101-3
3319 AQQ	23-101-3
3319 ARR	23-101-3
3319 ATT	23-101-3
3319 AXW	23-101-3
3319 AXX	23-101-3
3319 AXY	23-101-3
3320 ABB	23-101-3
3320 AQQ	23-101-3
3320 ARR	23-101-3
3320 ATT	23-101-3
3321 ABB	23-101-3
3321 AQQ	23-101-3
3321 ARR	23-101-3
3321 ATT	23-101-3
3322 ABB	23-101-3
3322 AQQ	23-101-3
3322 ARR	23-101-3
3322 ATT	23-101-3
3323 ABB	23-101-3
3323 AQQ	23-101-3
3323 ARR	23-101-3
3323 ATT	23-101-3
3324 ABB	23-101-3
3324 AQQ	23-101-3
3324 ARR	23-101-3
3324 ATT	23-101-3
3324 AXX	23-101-3
3324 AYW	23-101-3
3325 ABB	23-101-3
3325 AQQ	23-101-3
3325 ARR	23-101-3
3325 ATT	23-101-3
3325 AXX	23-101-3
3325 AYW	23-101-3
3326 ABB	23-101-3
3326 AQQ	23-101-3
3326 ARR	23-101-3
3326 ATT	23-101-3
3326 AXX	23-101-3
3326 AYW	23-101-3
3327 ABB	23-101-3
3327 AQQ	23-101-3
3327 ARR	23-101-3
3327 ATT	23-101-3
3327 AXX	23-101-3
3327 AYW	23-101-3
3330 ABB	23-101-3
3330 AQQ	23-101-3
3330 ARR	23-101-3
3330 ATT	23-101-3
3331 ABB	23-101-3
3331 AQQ	23-101-3
3331 ARR	23-101-3
3331 ATT	23-101-3
3332 ABB	23-101-3
3332 AOR	23-101-3
3332 AQQ	23-101-3
3332 ATT	23-101-3
3333 ABB	23-101-3
3333 AOR	23-101-3
3333 AQQ	23-101-3
3333 ATT	23-101-3
3334 ABB	23-101-3
3334 AOR	23-101-3
3334 ATT	23-101-3
3335 ABB	23-101-3
3335 AOR	23-101-3
3335 AQQ	23-101-3
3335 ATT	23-101-3
3336 ABB	23-101-3
3336 AOR	23-101-3
3336 ATT	23-101-3
3336 AXX	23-101-3
3336 AYW	23-101-3
3337 ABB	23-101-3
3337 AOR	23-101-3
3337 ATT	23-101-3
3337 AXX	23-101-3
3337 AYW	23-101-3
3338 ABB	23-101-3
3338 AOR	23-101-3
3338 ARR	23-101-3
3338 ATT	23-101-3
3338 AXX	23-101-3
3338 AUW	23-101-3
3339 ABB	23-101-3
3339 AOR	23-101-3
3339 ARR	23-101-3
3339 ATT	23-101-3
3339 AXX	23-101-3
3339 AYW	23-101-3
3340 ABB	23-101-3
3340 ARR	23-101-3
3340 ATT	23-101-3
3341 ABB	23-101-3
3341 ARR	23-101-3
3341 ATT	23-101-3
3342 AOB	23-101-3
3342 AOR	23-101-3
3342 AOX	23-101-3
3342 AOY	23-101-3
3343 AOR	23-101-3
3343 AOX	23-101-3
3343 AOY	23-101-3
3344 AOB	23-101-3
3344 AOR	23-101-3
3344 AOX	23-101-3
3344 AOY	23-101-3
3345 AOB	23-101-3
3345 AOR	23-101-3
3345 AOX	23-101-3
3345 AOY	23-101-3
3346 ABB	23-101-3
3346 AQQ	23-101-3
3346 ARR	23-101-3
3346 ATT	23-101-3
3347 ABB	23-101-3
3347 AQQ	23-101-3
3347 ARR	23-101-3
3347 ATT	23-101-3
3348 ABB	23-101-3
3348 AQQ	23-101-3
3348 ARR	23-101-3
3348 ATT	23-101-3
3349 ABB	23-101-3
3349 AQQ	23-101-3
3349 ARR	23-101-3
3349 ATT	23-101-3
3350 ABB	23-101-3
3350 AQQ	23-101-3
3350 ARR	23-101-3
3350 ATT	23-101-3
3350 AXX	23-101-3
3350 AYY	23-101-3
3351 ABB	23-101-3
3351 AQQ	23-101-3
3351 ARR	23-101-3
3351 ATT	23-101-3
3351 AXX	23-101-3
3351 AYY	23-101-3
3352 ABB	23-101-3
3352 ARR	23-101-3
3352 ATT	23-101-3
3353 ABB	23-101-3
3353 ARR	23-101-3
3353 ATT	23-101-3
3358 ABB	23-101-3
3358 AOX	23-101-3
3358 AQQ	23-101-3
3358 ARR	23-101-3
3358 AYY	23-101-3
3359 ABB	23-101-3
3359 AOX	23-101-3
3359 AQQ	23-101-3
3359 ARR	23-101-3
3359 AYY	23-101-3
3360 ABB	23-101-3
3360 AOX	23-101-3
3360 AQQ	23-101-3
3360 ARR	23-101-3
3360 AYY	23-101-3
3361 ABB	23-101-3
3361 AOX	23-101-3
3361 AQQ	23-101-3
3361 ARR	23-101-3
3361 AYY	23-101-3
3362 ABB	23-101-3
3362 AOX	23-101-3
3362 AQQ	23-101-3
3362 ARR	23-101-3
3362 ATT	23-101-3
3362 AYY	23-101-3
3363 ABB	23-101-3
3363 AOX	23-101-3
3363 AQQ	23-101-3
3363 ARR	23-101-3
3363 ATT	23-101-3
3363 AYY	23-101-3
3364 ABB	23-101-3
3364 AOX	23-101-3
3364 AQQ	23-101-3
3364 ARR	23-101-3
3364 AYY	23-101-3
3365 ABB	23-101-3
3365 AOX	23-101-3
3365 AQQ	23-101-3
3365 ARR	23-101-3
3365 AYY	23-101-3
3372 AOB	23-101-3
3372 AOF	23-101-3
3372 AOL	23-101-3
3372 AOM	23-101-3
3372 AOR	23-101-3
3372 AOW	23-101-3
3372 AOX	23-101-3
3373 AOB	23-101-3
3373 AOF	23-101-3
3373 AOL	23-101-3
3373 AOM	23-101-3
3373 AOR	23-101-3
3373 AOW	23-101-3
3373 AOX	23-101-3
3374 AOB	23-101-3
3374 AOL	23-101-3
3374 AOM	23-101-3
3374 AOR	23-101-3
3374 AOW	23-101-3
3374 AOX	23-101-3
3375 AOB	23-101-3
3375 AOL	23-101-3
3375 AOM	23-101-3
3375 AOR	23-101-3
3375 AOW	23-101-3
3375 AOX	23-101-3
3376 ABB	23-101-3
3376 AOR	23-101-3
3376 ATT	23-101-3
3377 ABB	23-101-3
3377 AOR	23-101-3
3377 ATT	23-101-3
3380 ABB	23-101-3
3380 AQQ	23-101-3
3380 ARR	23-101-3
3380 ATT	23-101-3
3381 ABB	23-101-3
3381 AQQ	23-101-3
3381 ARR	23-101-3
3381 ATT	23-101-3
3382 ABB	23-101-3
3382 ARR	23-101-3
3382 AXX	23-101-3
3382 AXY	23-101-3
3383 ABB	23-101-3
3383 ARR	23-101-3
3383 AXX	23-101-3
3383 AXY	23-101-3
3384 ABB	23-101-3
3384 AOX	23-101-3
3384 AQQ	23-101-3
3384 ARR	23-101-3
3384 ATT	23-101-3
3384 AYY	23-101-3
3385 ABB	23-101-3
3385 AOX	23-101-3
3385 AQQ	23-101-3
3385 ARR	23-101-3
3385 ATT	23-101-3
3385 AYY	23-101-3
3386 ABB	23-101-3
3386 AOX	23-101-3
3386 AQQ	23-101-3
3386 ARR	23-101-3
3386 AYY	23-101-3
3387 ABB	23-101-3
3387 AOX	23-101-3
3387 AQQ	23-101-3
3387 ARR	23-101-3
3387 AYY	23-101-3
3388 AOB	23-101-3
3388 AOQ	23-101-3
3388 AOR	23-101-3
3388 AOX	23-101-3
3388 AXU	23-101-3
3388 AYY	23-101-3
3389 AOB	23-101-3
3389 AOQ	23-101-3
3389 AOR	23-101-3

MyMopar.com

PART NUMBER	CODE
3389 AOX	23-101-3
3389 AXU	23-101-3
3389 AYY	23-101-3
3390 AOB	23-101-3
3390 AOQ	23-101-3
3390 AOR	23-101-3
3390 AOX	23-101-3
3390 AXU	23-101-3
3390 AYY	23-101-3
3391 AOB	23-101-3
3391 AOQ	23-101-3
3391 AOR	23-101-3
3391 AOX	23-101-3
3391 AXU	23-101-3
3391 AYY	23-101-3
3392 ABB	23-101-3
3392 AOX	23-101-3
3392 AQQ	23-101-3
3392 ARR	23-101-3
3392 AYY	23-101-3
3393 ABB	23-101-3
3393 AOX	23-101-3
3393 AQQ	23-101-3
3393 ARR	23-101-3
3393 AYY	23-101-3
3394 ABB	23-101-3
3394 AOX	23-101-3
3394 AQQ	23-101-3
3394 ARR	23-101-3
3394 AYY	23-101-3
3395 ABB	23-101-3
3395 AOX	23-101-3
3395 AQQ	23-101-3
3395 ARR	23-101-3
3395 AYY	23-101-3
3396 ABB	23-101-3
3396 AQQ	23-101-3
3397 ABB	23-101-3
3397 AQQ	23-101-3
3398 ABB	23-101-3
3398 AOX	23-101-3
3398 AQQ	23-101-3
3398 ARR	23-101-3
3398 ATT	23-101-3
3399 ABB	23-101-3
3399 AOX	23-101-3
3399 AQQ	23-101-3
3399 ARR	23-101-3
3399 ATT	23-101-3
3402 ATT	23-92-5
3403 AQQ	23-92-5
3403 ARR	23-92-5
3403 ATT	23-92-5
3403 AXW	23-92-5
3414 ABB	23-92-5
3414 AOR	23-92-5
3414 ATT	23-92-5
3415 ABB	23-92-5
3415 AOR	23-92-5
3415 ATT	23-92-5
3418 ABB	23-92-5
3418 AOR	23-92-5
3418 ATT	23-92-5
3419 ABB	23-92-5
3419 AOR	23-92-5
3419 ATT	23-92-5
3422 ABB	23-92-5
3422 AQQ	23-92-5
3422 ARR	23-92-5
3423 ABB	23-92-5
3423 AQQ	23-92-5
3423 ARR	23-92-5
3424 ABB	23-92-5
3424 AQQ	23-92-5
3424 ARR	23-92-5
3424 ATT	23-92-5
3425 ABB	23-92-5
3425 AQQ	23-92-5
3425 ARR	23-92-5
3425 ATT	23-92-5
3428 ABB	23-92-5
3428 AOX	23-92-5
3428 AQQ	23-92-5
3428 ARR	23-92-5
3428 ATT	23-92-5
3428 AYY	23-92-5
3429 ABB	23-92-5
3429 AOX	23-92-5
3429 AQQ	23-92-5
3429 ARR	23-92-5
3429 ATT	23-92-5
3429 AYY	23-92-5
3430 ABB	23-92-5
3430 AOX	23-92-5
3430 AQQ	23-92-5
3430 ARR	23-92-5
3430 ATT	23-92-5
3430 AYY	23-92-5
3431 ABB	23-92-5
3431 AOX	23-92-5
3431 AQQ	23-92-5
3431 ARR	23-92-5
3431 ATT	23-92-5
3431 AYY	23-92-5
3432 ABB	23-92-5
3432 AOX	23-92-5
3432 AQQ	23-92-5
3432 ARR	23-92-5
3432 ATT	23-92-5
3432 AYY	23-92-5
3433 ABB	23-92-5
3433 AOX	23-92-5
3433 AQQ	23-92-5
3433 ARR	23-92-5
3433 ATT	23-92-5
3433 AYY	23-92-5
3434 AOB	23-92-5
3434 AOQ	23-92-5
3434 AOR	23-92-5
3434 AOX	23-92-5
3434 AXU	23-92-5
3434 AYY	23-92-5
3435 AOB	23-92-5
3435 AOQ	23-92-5
3435 AOR	23-92-5
3435 AOX	23-92-5
3435 AXU	23-92-5
3435 AYY	23-92-5
3438 ABB	23-92-5
3438 AQQ	23-92-5
3438 ARR	23-92-5
3438 ATT	23-92-5
3438 AYY	23-92-5
3439 ABB	23-92-5
3439 AQQ	23-92-5
3439 ARR	23-92-5
3439 ATT	23-92-5
3439 AYY	23-92-5
3444 ABB	23-92-5
3444 AQQ	23-92-5
3445 ABB	23-92-5
3445 AQQ	23-92-5
3446 ABB	23-92-5
3446 AQQ	23-92-5
3446 ARR	23-92-5
3446 ATT	23-92-5
3446 AYY	23-92-5
3447 ABB	23-92-5
3447 AQQ	23-92-5
3447 ARR	23-92-5
3447 ATT	23-92-5
3447 AYY	23-92-5
3448 ABB	23-92-5
3448 AOX	23-92-5
3448 AQQ	23-92-5
3448 ARR	23-92-5
3449 ABB	23-92-5
3449 AOX	23-92-5
3449 AQQ	23-92-5
3449 ARR	23-92-5
3450 AB4	23-14-27
3450 AL3	23-14-27
3450 AM9	23-14-27
3450 AQ4	23-14-27
3450 AW3	23-14-27
3451 AB4	23-14-27
3451 AL3	23-14-27
3451 AM9	23-14-27
3451 AQ4	23-14-27
3451 AW3	23-14-27
3454 ABB	23-92-5
3454 AOX	23-92-5
3454 AQQ	23-92-5
3454 ARR	23-92-5
3454 ATT	23-92-5
3455 ABB	23-92-5
3455 AOX	23-92-5
3455 AQQ	23-92-5
3455 ARR	23-92-5
3455 ATT	23-92-5
3456 AOU	23-92-5
3456 AOX	23-92-5
3456 ARR	23-92-5
3456 ATT	23-92-5
3457 AOU	23-92-5
3457 AOX	23-92-5
3457 ARR	23-92-5
3457 ATT	23-92-5
3458 ABB	23-92-5
3458 AQQ	23-92-5
3458 ARR	23-92-5
3458 ATT	23-92-5
3458 AYY	23-92-5
3459 ABB	23-92-5
3459 AQQ	23-92-5
3459 ARR	23-92-5
3459 ATT	23-92-5
3459 AYY	23-92-5
3460 ABB	23-92-5
3460 AQQ	23-92-5
3460 ARR	23-92-5
3460 ATT	23-92-5
3460 AXX	23-92-5
3460 AYY	23-92-5
3461 ABB	23-92-5
3461 AQQ	23-92-5
3461 ARR	23-92-5
3461 ATT	23-92-5
3461 AXX	23-92-5
3461 AYY	23-92-5
3462 ABB	23-92-5
3462 ABW	23-92-5
3462 ALL	23-92-5
3462 AOF	23-92-5
3462 AOM	23-92-5
3462 AOR	23-92-5
3462 AOX	23-92-5
3462 AQQ	23-92-5
3462 ARW	23-92-5
3462 AXW	23-92-5
3463 ABB	23-92-5
3463 ABW	23-92-5
3463 ALL	23-92-5
3463 AOF	23-92-5
3463 AOM	23-92-5
3463 AOR	23-92-5
3463 AOX	23-92-5
3463 AQQ	23-92-5
3463 ARW	23-92-5
3463 AXW	23-92-5
3464 AOB	23-92-5
3464 AOF	23-92-5
3464 AOL	23-92-5
3464 AOM	23-92-5
3464 AOR	23-92-5
3464 AOW	23-92-5
3464 AOX	23-92-5
3465 AOB	23-92-5
3465 AOF	23-92-5
3465 AOL	23-92-5
3465 AOM	23-92-5
3465 AOR	23-92-5
3465 AOW	23-92-5
3465 AOX	23-92-5
3466 AAX	23-92-5
3466 ABB	23-92-5
3466 ABW	23-92-5
3466 AOR	23-92-5
3466 ARW	23-92-5
3466 AXW	23-92-5
3467 AAX	23-92-5
3467 ABB	23-92-5
3467 ABW	23-92-5
3467 AOR	23-92-5
3467 ARW	23-92-5
3467 AXW	23-92-5
3474 ABB	23-101-3
3474 AOR	23-101-3
3474 ATT	23-101-3
3474 AXX	23-101-3
3474 AYW	23-101-3
3475 ABB	23-101-3
3475 AOR	23-101-3
3475 ATT	23-101-3
3475 AXX	23-101-3
3475 AYW	23-101-3
3500 AA2	23-86-3
3500 AB4	23-86-3
3500 AQ4	23-86-3
3500 AT4	23-86-3
3500 AT6	23-86-3
3500 AW2	23-86-3
3501 AA2	23-86-3
3501 AB4	23-86-3
3501 AQ4	23-86-3
3501 AT4	23-86-3
3501 AT6	23-86-3
3501 AW2	23-86-3
3502 AA2	23-86-3
3502 AB4	23-86-3
3502 AT4	23-86-3
3502 AW2	23-86-3
3503 AA2	23-86-3
3503 AB4	23-86-3
3503 AT4	23-86-3
3503 AW2	23-86-3
3504 AA2	23-86-3
3504 AB3	23-86-3
3504 AQ3	23-86-3
3504 AT3	23-86-3
3504 AW2	23-86-3
3504 AX9	23-86-3
3504 AY3	23-86-3
3505 AA2	23-86-3
3505 AB3	23-86-3

MyMopar.com

PART NUMBER	CODE
3505 AQ3	23-86-3
3505 AT3	23-86-3
3505 AW2	23-86-3
3505 AX9	23-86-3
3505 AY3	23-86-3
3506 AB3	23-86-3
3516 AB2	23-86-3
3516 AQ2	23-86-3
3516 AT2	23-86-3
3516 AW2	23-86-3
3516 AY2	23-86-3
3517 AB2	23-86-3
3517 AQ2	23-86-3
3517 AT2	23-86-3
3517 AW2	23-86-3
3517 AY2	23-86-3
3526 AB8	23-96-8
3526 AR8	23-96-8
3526 AT8	23-96-8
3526 AX8	23-96-8
3527 AB8	23-96-8
3527 AR8	23-96-8
3527 AT8	23-96-8
3527 AX8	23-96-8
3528 AW3	23-96-8
3529 AW3	23-96-8
3531 AB4	23-96-8
3531 AQ4	23-96-8
3531 AR7	23-96-8
3531 AT6	23-96-8
3531 AX9	23-96-8
3531 AY3	23-96-8
3532 AB4	23-96-8
3532 AR7	23-96-8
3532 AW3	23-96-8
3542 AB3	23-86-3
3542 AQ3	23-86-3
3542 AT3	23-86-3
3542 AW2	23-86-3
3542 AY3	23-86-3
3543 AB3	23-86-3
3543 AQ3	23-86-3
3543 AT3	23-86-3
3543 AW2	23-86-3
3543 AY3	23-86-3
3544 AB3	23-86-3
3544 AL3	23-86-3
3544 AM2	23-86-3
3544 AQ3	23-86-3
3544 AW2	23-86-3
3544 AX9	23-86-3
3545 AB3	23-86-3
3545 AL3	23-86-3
3545 AM2	23-86-3
3545 AQ3	23-86-3
3545 AW2	23-86-3
3545 AX9	23-86-3
3584 AB4	23-79-64
3584 AQ4	23-79-64
3584 AR7	23-79-64
3584 AY3	23-79-64
3700 AB3	23-86-35
3700 AQ3	23-86-35
3700 AT3	23-86-35
3700 AW2	23-86-35
3700 AY3	23-86-35
3706 AB7	23-22-145
3706 AQ6	23-22-145
3706 AR6	23-22-145
3706 AY6	23-22-145
3707 AB7	23-22-145
3707 AQ6	23-22-145
3707 AR6	23-22-145
3707 AY6	23-22-145
3708 AB6	23-22-145
3708 AQ6	23-22-145
3708 AR7	23-22-145
3708 AT6	23-22-145
3709 AB6	23-22-145
3709 AQ6	23-22-145
3709 AR7	23-22-145
3709 AT6	23-22-145
3710 AB8	23-113-52
3710 AQ8	23-113-52
3710 AR8	23-113-52
3710 AR9	23-113-52
3710 AT8	23-113-52
3710 AT9	23-113-52
3710 AX9	23-113-52
3710 AY8	23-113-52
3711 AB3	23-86-36
3711 AQ3	23-86-36
3711 AR7	23-86-36
3711 AT3	23-86-36
3711 AW2	23-86-36
3711 AX9	23-86-36
3711 AY3	23-86-36
3713 AB3	23-86-35
3713 AQ3	23-86-35
3713 AR7	23-86-35
3713 AT3	23-86-35
3713 AX9	23-86-35
3713 AY3	23-86-35
3932 AT6	23-96-8
3932 AX9	23-96-8
4000 AW3	19-30-4
4000 AX9	19-30-4
4001 AB4	19-30-4
4001 AQ4	19-30-4
4001 AR7	19-30-4
4001 AT5	19-30-4
4001 AT6	19-30-4
4001 AU9	19-30-4
4001 AY3	19-30-4
4002 AB4	19-30-4
4002 AQ4	19-30-4
4002 AR7	19-30-4
4002 AT6	19-30-4
4002 AY3	19-30-4
4003 AB6	19-30-4
4003 AQ6	19-30-4
4003 AR7	19-30-4
4003 AT6	19-30-4
4003 AW4	19-30-4
4003 AX9	19-30-4
4003 AY3	19-30-4
4004 AR6	19-30-4
4004 AW4	19-30-4
4004 AX9	19-30-4
4005 AAX	19-30-4
4005 ABB	19-30-4
4005 AFF	19-30-4
4005 ALL	19-30-4
4005 AMM	19-30-4
4005 AQQ	19-30-4
4005 ARR	19-30-4
4005 AWX	19-30-4
4006 AR7	19-30-4
4006 TR6	19-30-4
4006 TW4	19-30-4
4008 AB4	19-30-4
4008 AQ4	19-30-4
4008 AR7	19-30-4
4008 AT6	19-30-4
4008 AY3	19-30-4
4009 AB4	19-30-4
4009 AQ4	19-30-4
4009 AR7	19-30-4
4009 AT6	19-30-4
4009 AX9	19-30-4
4009 AY3	19-30-4
4010 AW3	19-30-4
4010 AX9	19-30-4
4016 VTT	19-30-4
4017 AB7	8-33-69
4017 AQ6	8-33-69
4017 AR6	8-33-69
4017 AR7	8-33-69
4017 AT5	8-33-69
4020 AW3	19-30-4
4020 AX9	19-30-4
4100 AA3	23-77-3
4100 AB4	23-77-3
4100 ABW	23-77-3
4100 AL3	23-77-3
4100 ALF	23-77-3
4100 ARW	23-77-3
4100 AXW	23-77-3
4100 AXX	23-77-3
4101 AT6	24-28-3
4102 AB4	23-78-2
4102 AR5	23-76-76
4102 AR7	23-78-2
4102 AT6	23-78-2
4102 AW3	23-78-2
4102 AX9	23-78-2
4103 AT6	24-28-3
4104 AW2	24-28-3
4105 AT6	24-28-3
4106 AW2	24-28-3
4107 VX8	23-96-16
4109 ARR	23-77-3
4112 AB8	23-108-6
4112 AQ8	23-108-6
4112 AR5	23-108-6
4112 AR7	23-108-6
4112 AR8	23-108-6
4112 AT8	23-108-6
4112 AT9	23-108-6
4112 AU8	23-108-6
4112 AX9	23-108-6
4112 AY8	23-108-6
4113 ABB	23-108-6
4113 ALL	23-108-6
4113 AOF	23-108-6
4113 AOM	23-108-6
4113 AOR	23-108-6
4113 AOW	23-108-6
4113 AWX	23-108-6
4113 AXX	23-108-6
4130 AA6	23-86-20
4130 AB1	23-86-20
4130 AB6	23-86-20
4130 AF4	23-86-20
4130 AQ6	23-86-20
4130 AR7	23-86-20
4130 AT4	23-86-20
4130 AT6	23-86-20
4130 AW1	23-86-20
4130 AX8	23-86-20
4130 AY1	23-86-20
4130 AY6	23-86-20
4131 AA6	23-86-20
4131 AB1	23-86-20
4131 AB6	23-86-20
4131 AF4	23-86-20
4131 AQ6	23-86-20
4131 AR7	23-86-20
4131 AT4	23-86-20
4131 AW1	23-86-20
4131 AX8	23-86-20
4131 AY1	23-86-20
4131 AY6	23-86-20
4158 AX9	23-103-3
4159 AX9	23-103-3
4176 AA2	21-103-3
4176 AB3	21-103-3
4176 AM2	21-103-3
4176 AL3	21-103-3
4176 AQ3	21-103-3
4176 AX9	21-103-3
4177 AA2	21-103-3
4177 AB3	21-103-3
4177 AM2	21-103-3
4177 AL3	21-103-3
4177 AQ3	21-103-3
4177 AX9	21-103-3
4181 AT6	23-79-64
4181 AX9	23-79-64
4182 ABB	23-79-64
4182 AOX	23-79-64
4182 ARR	23-79-64
4182 ATT	23-79-64
4182 AWX	23-79-64
4183 AX9	23-79-67
4206 AB8	23-84-3
4206 AM9	23-84-3
4206 AQ8	23-84-3
4206 AY8	23-84-3
4206 VF9	23-84-3
4206 VR7	23-84-3
4206 VX8	23-84-3
4212 AB8	23-84-3
4212 AM9	23-84-3
4212 AQ8	23-84-3
4212 AY8	23-84-3
4212 VF9	23-84-3
4212 VR7	23-84-3
4212 VX8	23-84-3
4218 AB8	23-84-3
4218 AF9	23-84-3
4218 AM9	23-84-3
4218 AQ8	23-84-3
4218 AR7	23-84-3
4218 AX8	23-84-3
4218 AY8	23-84-3
4219 AB8	23-84-3
4219 AQ8	23-84-3
4219 AR7	23-84-3
4219 AT8	23-84-3
4219 AX8	23-84-3
4222 VX9	24-28-75
4223 VX9	24-28-75
4226 AL8	23-84-3
4226 AM9	23-84-3
4226 AQ8	23-84-3
4226 AY8	23-84-3
4226 VX8	23-84-3
4226 VF9	23-84-3
4226 VR7	23-84-3
4227 AB8	23-84-3
4227 AF9	23-84-3
4227 AM9	23-84-3
4227 AL8	23-84-3
4227 AR7	23-84-3
4227 AX8	23-84-3
4227 AY8	23-84-3
4231 AR7	23-33-132
4231 AY4	23-33-132
4233 AB8	1-48-158
4233 AQ8	1-48-158
4233 AY8	1-48-158
4233 VR8	1-48-158
4233 VT8	1-48-158
4233 VX9	1-48-158
4237 AB8	23-84-3
4237 AQ8	23-84-3
4237 AR8	23-84-3
4237 AT8	23-84-3

MyMopar.com

PART NUMBER	CODE
4237 AX8	23-84-3
4239 VB6	23-84-3
4239 VQ6	23-84-3
4239 VR6	23-84-3
4239 VT6	23-84-3
4239 VX8	23-84-3
4239 VY6	23-84-3
4242 AR7	23-33-89
4242 AY6	23-33-89
4243 AR7	23-33-89
4243 AY6	23-33-89
4249 AB8	23-113-52
4249 AQ8	23-113-52
4249 AR9	23-113-52
4249 AY8	23-113-52
4249 VT8	23-113-52
4252 VX8	23-113-50
4255 VX8	23-113-102
4257 AB5	23-33-132
4257 AQ7	23-33-132
4257 AR7	23-33-132
4257 AT5	23-33-132
4257 AX9	23-33-132
4257 AY4	23-33-132
4259 AB8	23-84-3
4259 AQ8	23-84-3
4259 AR7	23-84-3
4259 AT8	23-84-3
4259 AT9	23-84-3
4259 AU9	23-84-3
4259 AX8	23-84-3
4259 AY8	23-84-3
4261 AB8	23-84-3
4261 AQ8	23-84-3
4261 AR7	23-84-3
4261 AT8	23-84-3
4261 AX8	23-84-3
4261 AY8	23-84-3
4262 AB8	23-84-3
4262 AR7	23-84-3
4262 AT8	23-84-3
4263 AB6	23-84-3
4263 AQ6	23-84-3
4263 AR7	23-84-3
4263 AT6	23-84-3
4263 AX8	23-84-3
4263 AY6	23-84-3
4267 AX9	23-02-33
4310 VX9	23-108-20
4312 AT6	23-77-3
4313 AB6	23-18-27
4313 AQ6	23-18-27
4313 AR7	23-18-27
4313 AT6	23-18-27
4313 AW2	23-18-27
4313 AY3	23-18-27
4313 AY4	23-18-27
4314 VX9	23-79-33
4316 VT6	23-79-33
4319 AT8	23-79-33
4320 AT8	23-79-33
4323 AB4	23-78-2
4323 AF9	23-78-2
4323 AL3	23-76-2
4323 AM9	23-78-2
4323 AQ4	23-78-2
4323 AR5	23-78-2
4323 AW3	23-78-2
4323 AX9	23-78-2
4326 BT6	23-108-84
4329 VX8	23-108-84
4337 AT6	23-108-84
4338 VT6	23-109-84
4339 AB4	23-82-3
4339 VB8	23-82-3
4339 AF9	23-82-3
4339 AL3	23-82-3
4339 AM9	23-82-3
4339 AR5	23-82-3
4339 AW3	23-82-3
4339 AX9	23-82-3
4354 AX9	23-109-11
4358 AB8	23-78-2
4358 AQ8	23-78-2
4358 AT8	23-78-2
4364 AX9	23-109-6
4365 AB4	23-109-11
4365 AL3	23-109-11
4365 AM9	23-109-11
4365 AR5	23-109-11
4365 VF9	23-109-11
4365 VX8	23-109-11
4366 AB4	23-109-11
4366 AL3	23-109-11
4366 AM9	23-109-11
4366 AR5	23-109-11
4388 TX8	23-76-36
	23-108-66
4389 TX8	23-76-36
	23-108-66
4390 VT6	23-108-84
4396 AB8	23-47-8
4396 AL6	23-47-8
4396 AM9	23-47-8
4396 AQ8	23-47-8
4396 AR5	23-47-8
4396 AT8	23-47-8
4396 AT9	23-47-8
4396 AU9	23-47-8
4396 AY8	23-47-8
4397 AB8	23-47-8
4397 AL6	23-47-8
4397 AM9	23-47-8
4397 AQ8	23-47-8
4397 AR5	23-47-8
4397 AT8	23-47-8
4397 AT9	23-47-8
4397 AU9	23-47-8
4397 AY8	23-47-8
4398 AB8	23-47-8
4398 AL6	23-47-8
4398 AM9	23-47-8
4398 AQ8	23-47-8
4398 AR5	23-47-8
4398 AT8	23-47-8
4398 AT9	23-47-8
4398 AU9	23-47-8
4398 AY8	23-47-8
4399 AB8	23-47-8
4399 AL6	23-47-8
4399 AM9	23-47-8
4399 AQ8	23-47-8
4399 AR5	23-47-8
4399 AT8	23-47-8
4399 AT9	23-47-8
4399 AU9	23-47-8
4399 AY8	23-47-8
4405 AB4	23-38-7
4405 AB8	23-38-7
4405 AQ4	23-38-7
4405 AQ8	23-38-7
4405 AR6	23-38-7
4405 AR7	23-38-7
4405 AT6	23-38-7
4405 AW3	23-38-7
4405 AX9	23-38-7
4405 AY3	23-38-7
4406 VB8	23-71-1
4406 VQ8	23-71-1
4406 VR6	23-71-7
4406 VT8	23-71-7
4406 VY8	23-71-7
4406 VX8	23-71-7
4407 VX9	21-30-6
4410 AX9	23-109-6
4410 VT6	23-109-6
4411 VX8	1-87-21
4418 AB4	23-78-2
4418 AQ4	23-78-2
4418 AR7	23-78-2
4418 AT6	23-78-2
4418 AW3	23-78-2
4418 AY3	23-78-2
4428 AB4	23-26-87
4428 AB8	23-26-87
4428 AR7	23-26-87
4428 AT6	23-26-87
4428 AW3	23-26-87
4428 AX9	23-26-87
4428 AY3	23-26-87
4429 AB4	23-26-87
4429 AB8	23-26-87
4429 AR7	23-26-87
4429 AT6	23-26-87
4429 AW3	23-26-87
4429 AX9	23-26-87
4429 AY3	23-26-87
4432 AB4	23-38-7
4432 AB8	23-36-7
4432 AR7	23-36-7
4432 AT6	23-38-7
4432 AW3	23-38-7
4432 AX9	23-38-7
4432 AY3	23-38-7
4434 AB8	23-71-1
4434 AQ8	23-71-1
4434 AR7	23-71-1
4434 AR8	23-71-1
4434 AT8	23-71-1
4434 AT9	23-71-1
4434 AU8	23-71-1
4434 AX8	23-71-1
4434 AY8	23-71-1
4435 AB8	23-38-2
4435 AQ8	23-38-2
4435 AR5	23-38-2
4435 AT9	23-38-2
4435 AW8	23-38-2
4435 AX9	23-38-2
4440 AT6	23-108-84
4441 AT6	23-108-84
4442 AX9	24-28-75
	24-28-78
4446 AB4	23-78-2
4446 AQ4	23-78-2
4446 AR7	23-78-2
4446 AT6	23-78-2
4446 AW3	23-78-2
4446 AY3	23-78-2
4448 VX9	23-96-10
4449 VX9	23-96-10
4450 VX9	23-96-10
4452 AX8	23-96-8
4452 VB9	23-96-8
4452 VR6	23-96-8
4452 VY8	23-96-8
4453 AX8	23-96-8
4453 VB8	23-96-8
4453 VR6	23-96-8
4453 VY8	23-96-8
4454 VB4	23-109-54
4454 VR6	23-109-54
4454 VX9	23-109-54
4454 VY3	23-109-54
4456 AB4	1-67-18
4456 AB8	1-67-18
4456 AQ8	1-67-18
4456 AR7	1-67-18
4456 AT5	1-67-18
4456 AU9	1-67-18
4457 AA3	23-49-3
4457 AB4	23-49-3
4457 AFR	23-49-3
4457 AM9	23-49-3
4457 AR7	23-49-3
4459 AB8	23-78-2
4459 AQ8	23-78-2
4459 AR7	23-78-2
4459 AT8	23-78-2
4459 AW3	23-78-2
4460 AB4	23-71-3
4460 AB8	23-71-3
4460 AQ4	23-71-3
4460 AQ8	23-71-3
4460 AR5	23-71-3
4460 AR6	23-71-3
4460 AR7	23-71-3
4460 AT6	23-71-3
4460 AT9	23-71-3
4460 AU8	23-71-3
4460 AW3	23-71-3
4460 AX9	23-71-3
4460 AY3	23-71-3
4462 AX9	23-109-10
4463 AX9	23-109-10
4472 AX9	23-109-6
4473 AX9	23-109-6
4474 AB8	23-38-1
4474 AR6	23-38-1
4474 AR7	23-38-1
4474 AT8	23-38-1
4474 AX9	23-38-1
4474 AY3	23-38-1
4476 AA3	23-78-2
4476 AB4	23-78-2
4476 AL3	23-78-2
4476 AM9	23-78-2
4476 AQ4	23-78-2
4476 AR5	23-78-2
4476 AW3	23-78-2
4476 AX9	23-78-2
4478 AA3	23-78-2
4478 AB4	23-78-2
4478 AB5	23-78-2
4478 AL3	23-78-2
4478 AM9	23-78-2
4478 AW3	23-78-2
4478 AX9	23-78-2
4479 AB4	23-78-2
4479 AL2	23-78-2
4479 AX8	23-78-2
4480 AB4	23-78-2
4480 AL3	23-78-2
4480 AM9	23-78-2
4480 AR5	23-78-2
4480 AR7	23-78-2
4480 AW3	23-78-2
4480 AX9	23-78-2
4481 AB4	23-78-2
4481 AQ4	23-78-2
4481 AR7	23-78-2
4481 AT6	23-78-2
4481 AW3	23-78-2
4481 AX9	23-78-2
4481 AY3	23-78-2
4482 AB4	23-78-2
4482 AR7	23-78-2
4482 AT6	23-78-2
4482 AX9	23-78-2
4482 AY3	23-78-2

MyMopar.com

PART NUMBER	CODE
4483 AR7	23-78-2
4483 AT6	23-78-2
4483 AY3	23-78-2
4484 AX9	23-109-12
4485 AX9	23-109-12
4488 AX9	23-109-12
4489 AX9	23-109-12
4490 AX9	23-109-11
4491 AX9	23-109-11
4492 AX9	23-109-11
4496 AB4	1-67-18
4496 AB8	1-67-18
4496 AL4	1-67-18
4496 AQ8	1-67-18
4496 AR6	1-67-18
4496 AR7	1-67-18
4496 AU9	1-67-18
4496 AX9	1-67-18
4496 AY3	1-67-18
4498 AX9	23-79-64
4498 AY3	23-79-64
4499 ABB	23-79-64
4499 AOX	23-79-64
4499 ARR	23-79-64
4499 ATT	23-79-64
4499 AWX	23-79-64
4578 AOB	23-101-3
4578 VOR	23-101-3
4578 VOX	23-101-3
4578 VOY	23-101-3
4579 AOB	23-101-3
4579 VOR	23-101-3
4579 VOX	23-101-3
4579 VOY	23-101-3
4603 A1B	23-108-12
4603 A1Q	23-108-12
4603 A1R	23-108-12
4603 A1T	23-108-12
4608 AX9	23-109-12
4609 AX9	23-109-12
4629 AB4	1-67-18
4629 AF9	1-67-18
4629 AM9	1-67-18
4629 AR7	1-67-18
4800 ABB	23-76-86
4800 ALL	23-76-86
4800 AOF	23-76-86
4800 AOM	23-76-86
4800 AOR	23-76-86
4800 AWB	23-76-86
4800 AWF	23-76-86
4800 AWR	23-76-86
4800 AXX	23-76-86
4801 ABB	23-76-86
4801 ALL	23-76-86
4801 AOF	23-76-86
4801 AOM	23-76-86
4801 AOR	23-76-86
4801 AWB	23-76-86
4801 AWR	23-76-86
4801 AWX	23-76-86
4801 AXX	23-76-86
4802 ABB	23-76-86
4802 ALL	23-76-66
4802 AOF	23-76-66
4802 AOM	23-76-66
4802 AOR	23-76-66
4802 AWB	23-76-66
4802 AWR	23-76-66
4802 AWX	23-76-66
4802 AXX	23-76-66
4803 ABB	23-76-66
4803 ALL	23-76-66
4803 AOF	23-76-66
4803 AOM	23-76-66
4803 AOR	23-76-66
4803 AWB	23-76-66
4803 AWR	23-76-66
4803 AWX	23-76-66
4803 AXX	23-76-66
4806 AB4	23-101-14
4806 AL3	23-101-14
4806 AM9	23-101-14
4806 AR5	23-101-14
4806 AW3	23-101-14
4806 AX9	23-101-14
4807 AB4	23-101-14
4807 AL3	23-101-14
4807 AM9	23-101-14
4807 AR5	23-101-14
4807 AW3	23-101-14
4807 AX9	23-101-14
4808 ABB	23-76-86
4808 ALL	23-76-86
4808 AOM	23-76-86
4808 AOR	23-76-86
4808 AWB	23-76-86
4808 AWX	23-76-86
4808 AXX	23-76-86
4809 ABB	23-76-86
4809 ALL	23-76-86
4809 AOM	23-76-86
4809 AOR	23-76-86
4809 AWB	23-76-86
4809 AWX	23-76-86
4809 AXX	23-76-86
4810 ABB	23-76-66
4810 ALL	23-76-66
4810 AOM	23-76-66
4810 AOR	23-76-66
4810 AWB	23-76-66
4810 AWR	23-76-66
4810 AWX	23-76-66
4810 AXX	23-76-66
4811 ABB	23-76-66
4811 ALL	23-76-66
4811 AOM	23-76-66
4811 AOR	23-76-66
4811 AWB	23-76-66
4811 AWR	23-76-66
4811 AWX	23-76-66
4811 AXX	23-76-66
4814 AB4	23-112-153
4814 AL3	23-112-153
4814 AM9	23-112-153
4814 AR5	23-112-153
4814 AW3	23-112-153
4814 AX9	23-112-153
4815 AB4	23-112-153
4815 AL3	23-112-153
4815 AM9	23-112-153
4815 AR5	23-112-153
4815 AW3	23-112-153
4815 AX9	23-112-153
4816 AB4	23-112-153
4816 AL3	23-112-153
4816 AM9	23-112-153
4816 AR5	23-112-153
4816 AW3	23-112-153
4816 AX9	23-112-153
4817 AB4	23-112-153
4817 AL3	23-112-153
4817 AM9	23-112-153
4817 AR5	23-112-153
4817 AW3	23-112-153
4817 AX9	23-112-153
4818 AB4	23-112-153
4818 AL3	23-112-153
4818 AM9	23-112-153
4818 AR5	23-112-153
4818 AW3	23-112-153
4818 AX9	23-112-153
4819 AB4	23-112-153
4819 AL3	23-112-153
4819 AM9	23-112-153
4819 AR5	23-112-153
4819 AW3	23-112-153
4819 AX9	23-112-153
4832 AR7	23-71-7
4832 AX8	23-71-7
4832 AY3	23-71-7
4832 VB8	23-71-7
4832 VQ8	23-71-7
4858 A5X	23-96-3
4858 V5B	23-96-3
4858 V5R	23-96-3
4858 V5Y	23-96-3
4859 AX8	23-109-6
4859 VB8	23-109-6
4859 VR6	23-109-6
4859 VY8	23-109-6
4919 AX9	23-79-64
4925 VW1	23-86-2
4925 VX8	23-86-2
4949 A1B	23-76-18
4949 A1L	23-76-18
4949 A1N	23-76-18
4949 A1Q	23-76-18
4949 A1R	23-76-18
4949 A1T	23-76-18
4967 AB4	23-109-16
4967 AL3	23-109-16
4967 AM9	23-109-16
4967 AR5	23-109-16
4967 AW3	23-109-16
4967 AX9	23-109-16
4975 AL8	23-86-2
4975 VB1	23-86-2
4975 VW1	23-86-2
4975 VX8	23-86-2
4978 AB4	23-101-39
4978 AF9	23-101-39
4978 AL3	23-101-39
4978 AM9	23-101-39
4978 AR5	23-101-39
4978 AX9	23-101-39
4979 AB4	23-101-39
4979 AF9	23-101-39
4979 AL3	23-101-39
4979 AM9	23-101-39
4979 AR5	23-101-39
4979 AX9	23-101-39
4995 AX9	23-79-64
4996 AX9	23-79-64
5134 A4B	23-108-4
5134 A5X	23-108-4
5134 V5R	23-108-4
5134 V5Y	23-108-4
5135 A4B	23-108-4
5135 A5X	23-108-4
5135 V5R	23-108-4
5135 V5Y	23-108-4
5304 A4B	23-108-4
5304 A4R	23-108-4
5304 A4T	23-108-4
5305 A4B	23-108-4
5305 A4R	23-108-4
5305 A4T	23-108-4
5306 A4B	23-108-4
5306 A4R	23-108-4
5306 A4T	23-108-4
5307 A4B	23-108-4
5307 A4R	23-108-4
5307 A4T	23-108-4
5308 A1B	23-108-4
5308 A1Q	23-108-4
5308 A1R	23-108-4
5308 A1T	23-108-4
5309 A1B	23-108-4
5309 A1Q	23-108-4
5309 A1R	23-108-4
5309 A1T	23-108-4
5310 A1B	23-108-4
5310 A1Q	23-108-4
5310 A1R	23-108-4
5310 A1T	23-108-4
5311 A1B	23-108-4
5311 A1Q	23-108-4
5311 A1R	23-108-4
5311 A1T	23-108-4
5314 A4B	23-108-4
5314 A4R	23-108-4
5314 A4T	23-108-4
5315 A4B	23-108-4
5315 A4R	23-108-4
5315 A4T	23-108-4
5316 A4B	23-108-4
5316 A4R	23-108-4
5316 A4T	23-108-4
5317 A4B	23-108-4
5317 A4R	23-108-4
5317 A4T	23-108-4
5318 A4B	23-108-4
5318 A4Q	23-108-4
5318 A4R	23-108-4
5318 A4T	23-108-4
5319 A4B	23-108-4
5319 A4Q	23-108-4
5319 A4R	23-108-4
5319 A4T	23-108-4
5320 A4B	23-108-4
5320 A4Q	23-108-4
5320 A4R	23-108-4
5320 A4T	23-108-4
5321 A4B	23-108-4
5321 A4Q	23-108-4
5321 A4R	23-108-4
5321 A4T	23-108-4
5324 A5B	23-108-4
5324 A5Q	23-108-4
5324 A5R	23-108-4
5324 A5X	23-108-4
5324 A5Y	23-108-4
5325 A5B	23-108-4
5325 A5Q	23-108-4
5325 A5R	23-108-4
5325 A5X	23-108-4
5325 A5Y	23-108-4
5326 A1B	23-108-4
5326 A1Q	23-108-4
5326 A1R	23-108-4
5326 A1T	23-108-4
5327 A1B	23-108-4
5327 A1Q	23-108-4
5327 A1R	23-108-4
5327 A1T	23-108-4
5328 A1B	23-108-4
5328 A1Q	23-108-4
5328 A1R	23-108-4
5328 A1T	23-108-4
5329 A1B	23-108-4
5329 A1Q	23-108-4
5329 A1R	23-108-4
5329 A1T	23-108-4
5330 A1B	23-108-4
5330 A1Q	23-108-4
5330 A1R	23-108-4
5330 A1T	23-108-4
5331 A1B	23-108-4

MyMopar.com

PART NUMBER	CODE	PART NUMBER	CODE	PART NUMBER	CODE	PART NUMBER	CODE	PART NUMBER	CODE
5331 A1Q	23-108-4	5348 A4R	23-108-4	5367 A4T	23-108-4	5394 A1Q	23-108-4	5409 A8T	23-108-4
5331 A1R	23-108-4	5348 A4T	23-108-4	5368 A4B	23-108-4	5394 A1R	23-108-4	5410 A8T	23-108-4
5331 A1T	23-108-4	5348 A4X	23-108-4	5368 A4R	23-108-4	5394 A1T	23-108-4	5412 A4B	23-108-4
5332 A1B	23-108-4	5348 A4Y	23-108-4	5368 A4T	23-108-4	5395 A1B	23-108-4	5412 A4Q	23-108-4
5332 A1Q	23-108-4	5349 A4B	23-108-4	5369 A4B	23-108-4	5395 A1Q	23-108-4	5412 A4R	23-108-4
5332 A1R	23-108-4	5349 A4R	23-108-4	5369 A4Q	23-108-4	5395 A1R	23-108-4	5412 A4T	23-108-4
5332 A1T	23-108-4	5349 A4T	23-108-4	5369 A4R	23-108-4	5395 A1T	23-108-4	5412 A4X	23-108-4
5333 A1B	23-108-4	5349 A4X	23-108-4	5369 A4T	23-108-4	5396 A4B	23-108-4	5412 A4Y	23-108-4
5333 A1Q	23-108-4	5349 A4Y	23-108-4	5369 A4Y	23-108-4	5396 A4Q	23-108-4	5413 A4B	23-108-4
5333 A1R	23-108-4	5350 A5B	23-108-4	5369 A5R	23-108-4	5396 A4R	23-108-4	5413 A4Q	23-108-4
5333 A1T	23-108-4	5350 A5Q	23-108-4	5369 V4X	23-108-4	5396 A4T	23-108-4	5413 A4R	23-108-4
5334 A1B	23-108-4	5350 A5R	23-108-4	5371 A4B	23-108-4	5397 A4B	23-108-4	5413 A4T	23-108-4
5334 A1Q	23-108-4	5350 A5X	23-108-4	5371 A4Q	23-108-4	5397 A4Q	23-108-4	5413 A4X	23-108-4
5334 A1R	23-108-4	5350 A5Y	23-108-4	5371 A4R	23-108-4	5397 A4R	23-108-4	5413 A4Y	23-108-4
5334 A1T	23-108-4	5351 A5B	23-108-4	5371 A4T	23-108-4	5397 A4T	23-108-4	5415 A4B	23-108-4
5335 A1B	23-108-4	5351 A5Q	23-108-4	5371 A4X	23-108-4	5398 A4B	23-108-4	5415 A4Q	23-108-4
5335 A1Q	23-108-4	5351 A5R	23-108-4	5371 A4Y	23-108-4	5398 A4Q	23-108-4	5415 A4R	23-108-4
5335 A1R	23-108-4	5351 A5X	23-108-4	5371 A5R	23-108-4	5398 A4R	23-108-4	5415 A4T	23-108-4
5335 A1T	23-108-4	5351 A5Y	23-108-4	5373 A4B	23-108-4	5398 A4T	23-108-4	5417 A1B	23-108-4
5336 A1B	23-108-4	5352 A1B	23-108-4	5373 A4Q	23-108-4	5399 A1B	23-108-4	5417 A1Q	23-108-4
5336 A1Q	23-108-4	5352 A1R	23-108-4	5373 A4R	23-108-4	5399 A1Q	23-108-4	5417 A1R	23-108-4
5336 A1R	23-108-4	5352 A1T	23-108-4	5373 A4T	23-108-4	5399 A1R	23-108-4	5417 A1T	23-108-4
5336 A1T	23-108-4	5353 A1B	23-108-4	5374 A2B	23-108-4	5399 A1T	23-108-4	5418 A1B	23-108-4
5337 A1B	23-108-4	5353 A1R	23-108-4	5374 A2Q	23-108-4	5399 A1Y	23-108-4	5418 A1R	23-108-4
5337 A1Q	23-108-4	5353 A1T	23-108-4	5374 A2R	23-108-4	5400 A1B	23-108-4	5418 A1T	23-108-4
5337 A1R	23-108-4	5354 A1B	23-108-4	5374 A2T	23-108-4	5400 A1Q	23-108-4	5419 A1B	23-108-4
5337 A1T	23-108-4	5354 A1R	23-108-4	5374 A2Y	23-108-4	5400 A1R	23-108-4	5419 A1R	23-108-4
5339 A1B	23-108-4	5354 A1T	23-108-4	5378 A4B	23-108-4	5400 A1T	23-108-4	5419 A1T	23-108-4
5339 A1Q	23-108-4	5355 A1B	23-108-4	5378 A4Q	23-108-4	5400 A1Y	23-108-4	5420 A1B	23-108-4
5339 A1R	23-108-4	5355 A1Q	23-108-4	5378 A4R	23-108-4	5401 A1B	23-108-4	5420 A1R	23-108-4
5339 A1T	23-108-4	5355 A1R	23-108-4	5378 A4X	23-108-4	5401 A1Q	23-108-4	5420 A1T	23-108-4
5340 A4B	23-108-4	5355 A1T	23-108-4	5378 A4Y	23-108-4	5401 A1R	23-108-4	5421 A1B	23-108-4
5340 A4Q	23-108-4	5356 A2B	23-108-4	5378 A5R	23-108-4	5401 A1T	23-108-4	5421 A1R	23-108-4
5340 A4R	23-108-4	5356 A2Q	23-108-4	5380 A2T	23-108-4	5401 A1Y	23-108-4	5421 A1T	23-108-4
5340 A4T	23-108-4	5356 A2R	23-108-4	5381 A2T	23-108-4	5402 A1B	23-108-4	5422 A1B	23-108-4
5341 A4B	23-108-4	5356 A2T	23-108-4	5382 A2T	23-108-4	5402 A1Q	23-108-4	5422 A1R	23-108-4
5341 A4Q	23-108-4	5356 A2Y	23-108-4	5383 A2T	23-108-4	5402 A1R	23-108-4	5422 A1T	23-108-4
5341 A4R	23-108-4	5357 A1B	23-108-4	5384 A2T	23-108-4	5402 A1T	23-108-4	5423 A1B	23-108-4
5341 A4T	23-108-4	5357 A1R	23-108-4	5385 A2T	23-108-4	5402 A1Y	23-108-4	5423 A1R	23-108-4
5342 A4B	23-108-4	5357 A1T	23-108-4	5386 A8T	23-108-4	5403 A1B	23-108-4	5423 A1T	23-108-4
5342 A4Q	23-108-4	5358 A1B	23-108-4	5387 A8T	23-108-4	5403 A1Q	23-108-4	5424 A1B	23-108-4
5342 A4R	23-108-4	5358 A1R	23-108-4	5388 A8T	23-108-4	5403 A1R	23-108-4	5424 A1Q	23-108-4
5342 A4T	23-108-4	5358 A1T	23-108-4	5389 A8T	23-108-4	5403 A1T	23-108-4	5424 A1R	23-108-4
5343 A4B	23-108-4	5359 A1B	23-108-4	5390 A1B	23-108-4	5403 A1Y	23-108-4	5424 A1T	23-108-4
5343 A4Q	23-108-4	5359 A1R	23-108-4	5390 A1Q	23-108-4	5404 A1B	23-108-4	5424 A1Y	23-108-4
5343 A4R	23-108-4	5359 A1T	23-108-4	5390 A1R	23-108-4	5404 A1Q	23-108-4	5425 A1B	23-108-4
5343 A4T	23-108-4	5360 A1B	23-108-4	5390 A1T	23-108-4	5404 A1R	23-108-4	5425 A1Q	23-108-4
5344 A4B	23-108-4	5360 A1Q	23-108-4	5391 A1B	23-108-4	5404 A1T	23-108-4	5425 A1R	23-108-4
5344 A4Q	23-108-4	5360 A1R	23-108-4	5391 A1Q	23-108-4	5404 A1Y	23-108-4	5425 A1T	23-108-4
5344 A4R	23-108-4	5360 A1T	23-108-4	5391 A1R	23-108-4	5405 AB4	23-108-4	5425 A1Y	23-108-4
5344 A4T	23-108-4	5362 A1B	23-108-4	5391 A1T	23-108-4	5405 ABB	23-108-4	5426 A4B	23-108-4
5345 A4B	23-108-4	5362 A1Q	23-108-4	5392 A1B	23-108-4	5405 AQQ	23-108-4	5426 A4Q	23-108-4
5345 A4Q	23-108-4	5362 A1R	23-108-4	5392 A1Q	23-108-4	5405 AR5	23-108-4	5426 A4R	23-108-4
5345 A4R	23-108-4	5362 A1T	23-108-4	5392 A1R	23-108-4	5405 ARR	23-108-4	5426 A4T	23-108-4
5345 A4T	23-108-4	5362 A1Y	23-108-4	5392 A1T	23-108-4	5405 AT6	23-108-4	5426 A4X	23-108-4
5346 A4B	23-108-4	5366 A4B	23-108-4	5393 A1B	23-108-4	5405 ATT	23-108-4	5426 A4Y	23-108-4
5346 A4Q	23-108-4	5366 A4R	23-108-4	5393 A1Q	23-108-4	5407 A1B	23-108-4	5427 A4B	23-108-4
5346 A4R	23-108-4	5366 A4T	23-108-4	5393 A1R	23-108-4	5407 A1Q	23-108-4	5427 A4Q	23-108-4
5346 A4T	23-108-4	5367 A4B	23-108-4	5393 A1T	23-108-4	5407 A1R	23-108-4	5427 A4R	23-108-4
5348 A4B	23-108-4	5367 A4R	23-108-4	5394 A1B	23-108-4	5407 A1T	23-108-4	5427 A4T	23-108-4

MyMopar.com

PART NUMBER	CODE
5427 A4X	23-108-4
5427 A4Y	23-108-4
5428 A4B	23-108-4
5428 A4Q	23-108-4
5428 A4R	23-108-4
5428 A4T	23-108-4
5428 A4Y	23-108-4
5429 A4B	23-108-4
5429 A4Q	23-108-4
5429 A4R	23-108-4
5429 A4T	23-108-4
5429 A4Y	23-108-4
5430 A4B	23-108-4
5430 A4Q	23-108-4
5430 A4R	23-108-4
5430 A4T	23-108-4
5430 A4Y	23-108-4
5431 A4Q	23-108-4
5431 A4R	23-108-4
5431 A4T	23-108-4
5431 A4Y	23-108-4
5432 A4B	23-108-4
5432 A4Q	23-108-4
5432 A4R	23-108-4
5432 A4T	23-108-4
5432 A4X	23-108-4
5432 A4Y	23-108-4
5433 A4B	23-108-4
5433 A4Q	23-108-4
5433 A4R	23-108-4
5433 A4T	23-108-4
5433 A4X	23-108-4
5433 A4Y	23-108-4
5434 A4B	23-108-4
5434 A4Q	23-108-4
5434 A4R	23-108-4
5434 A4T	23-108-4
5434 A4X	23-108-4
5434 A4Y	23-108-4
5435 A4B	23-108-4
5435 A4Q	23-108-4
5435 A4R	23-108-4
5435 A4T	23-108-4
5435 A4X	23-108-4
5435 A4Y	23-108-4
5436 A5B	23-108-4
5436 A5R	23-108-4
5436 A5T	23-108-4
5438 A5B	23-108-4
5438 A5R	23-108-4
5438 A5T	23-108-4
5440 A5B	23-108-4
5440 A5R	23-108-4
5440 A5T	23-108-4
5441 A5B	23-108-4
5441 A5R	23-108-4
5441 A5T	23-108-4
5442 A5B	23-108-4
5442 A5R	23-108-4
5442 A5T	23-108-4
5443 AB4	23-108-4
5443 AF9	23-108-4
5443 AL3	23-108-4
5443 AM9	23-108-4
5443 AR5	23-108-4
5443 AW3	23-108-4
5443 AX9	23-108-4
5444 A4B	23-108-4
5444 A4R	23-108-4
5444 A4T	23-108-4
5445 A4B	23-108-4
5445 A4R	23-108-4
5445 A4T	23-108-4
5446 A3R	23-108-4
5446 A3X	23-108-4
5447 A3R	23-108-4
5447 A3X	23-108-4
5448 A4B	23-108-4
5448 A4R	23-108-4
5448 A4T	23-108-4
5459 A4B	23-108-4
5459 A4L	23-108-4
5459 A4N	23-108-4
5459 A4R	23-108-4
5459 A4T	23-108-4
5459 A4X	23-108-4
5461 A8B	23-108-4
5461 A8R	23-108-4
5461 A8T	23-108-4
5462 A8B	23-108-4
5462 A8Q	23-108-4
5462 A8R	23-108-4
5462 A8T	23-108-4
5463 A8B	23-108-4
5463 A8Q	23-108-4
5463 A8R	23-108-4
5463 A8T	23-108-4
5464 A8B	23-108-4
5464 A8Q	23-108-4
5464 A8R	23-108-4
5464 A8T	23-108-4
5465 A4B	23-108-4
5465 A4L	23-108-4
5465 A4N	23-108-4
5465 A4R	23-108-4
5465 A4T	23-108-4
5465 A4X	23-108-4
5466 A4B	23-108-4
5466 A4L	23-108-4
5466 A4N	23-108-4
5466 A4R	23-108-4
5466 A4T	23-108-4
5466 A4X	23-108-4
5469 A1B	23-108-4
5469 A1L	23-108-4
5469 A1N	23-108-4
5469 A1Q	23-108-4
5469 A1R	23-108-4
5469 A1T	23-108-4
5470 A1B	23-108-4
5470 A1L	23-108-4
5470 A1N	23-108-4
5470 A1Q	23-108-4
5470 A1R	23-108-4
5470 A1T	23-108-4
5473 A1B	23-108-4
5473 A1Q	23-108-4
5473 A1R	23-108-4
5473 A1T	23-108-4
5473 A1Y	23-108-4
5474 A1N	23-108-4
5475 A1N	23-108-4
5476 A4B	23-108-4
5476 A4L	23-108-4
5476 A4R	23-108-4
5476 A4T	23-108-4
5476 A4W	23-108-4
5476 A4X	23-108-4
5477 A4B	23-108-4
5477 A4L	23-108-4
5477 A4R	23-108-4
5477 A4T	23-108-4
5477 A4X	23-108-4
5477 A4W	23-108-4
5480 A4B	23-108-4
5480 A4L	23-108-4
5480 A4R	23-108-4
5480 A4T	23-108-4
5480 A4X	23-108-4
5481 AB4	23-108-4
5481 A4L	23-108-4
5481 A4R	23-108-4
5481 A4T	23-108-4
5481 A4X	23-108-4
5482 A5B	23-108-4
5482 A5R	23-108-4
5482 A5T	23-108-4
5487 A7B	23-108-4
5487 A7G	23-108-4
5487 A7N	23-108-4
5487 A7P	23-108-4
5487 A7Q	23-108-4
5487 A7R	23-108-4
5487 A7T	23-108-4
5488 A7A	23-108-4
5488 A7B	23-108-4
5488 A7G	23-108-4
5488 A7T	23-108-4
5489 A3B	23-108-4
5489 A3K	23-108-4
5489 A3R	23-108-4
5489 A3T	23-108-4
5489 A3W	23-108-4
5489 A3X	23-108-4
5490 A8B	23-108-4
5490 A8G	23-108-4
5490 A8N	23-108-4
5491 A8B	23-108-4
5491 A8G	23-108-4
5491 A8N	23-108-4
5492 A9B	23-108-4
5492 A9K	23-108-4
5492 A9R	23-108-4
5492 A9T	23-108-4
5492 A9W	23-108-4
5492 A9X	23-108-4
5493 A9B	23-108-4
5493 A9K	23-108-4
5493 A9R	23-108-4
5493 A9T	23-108-4
5493 A9W	23-108-4
5493 A9X	23-108-4
5494 A7B	23-108-4
5494 A7G	23-108-4
5494 A7N	23-108-4
5494 A7P	23-108-4
5494 A7Q	23-108-4
5494 A7R	23-108-4
5494 A7T	23-108-4
5495 A3B	23-108-4
5495 A3K	23-108-4
5495 A3R	23-108-4
5495 A3T	23-108-4
5495 A3W	23-108-4
5495 A3X	23-108-4
5503 A1B	23-108-12
5503 A1Q	23-108-12
5503 A1R	23-108-12
5503 A1T	23-108-12
5504 A4B	23-108-12
5504 A4R	23-108-12
5504 A4T	23-108-12
5505 A4B	23-108-12
5505 A4R	23-108-12
5505 A4T	23-108-12
5506 A4B	23-108-12
5506 A4R	23-108-12
5506 A4T	23-108-12
5507 A4B	23-108-12
5507 A4R	23-108-12
5507 A4T	23-108-12
5508 A1B	23-108-12
5508 A1Q	23-108-12
5508 A1R	23-108-12
5508 A1T	23-108-12
5509 A1B	23-108-12
5509 A1Q	23-108-12
5509 A1R	23-108-12
5509 A1T	23-108-12
5511 A4B	23-108-12
5511 A4R	23-108-12
5511 A4T	23-108-12
5513 A4B	23-108-12
5513 A4R	23-108-12
5513 A4T	23-108-12
5514 A4B	23-108-12
5514 A4Q	23-108-12
5514 A4R	23-108-12
5514 A4T	23-108-12
5515 A4B	23-108-12
5515 A4Q	23-108-12
5515 A4R	23-108-12
5515 A4T	23-108-12
5516 A4B	23-108-12
5516 A4Q	23-108-12
5516 A4R	23-108-12
5516 A4T	23-108-12
5518 A2B	23-108-12
5518 A2Q	23-108-12
5518 A2R	23-108-12
5518 A2T	23-108-12
5518 A2Y	23-108-12
5519 A2B	23-108-12
5519 A2Q	23-108-12
5519 A2R	23-108-12
5519 A2T	23-108-12
5519 A2Y	23-108-12
5520 A4B	23-108-12
5525 A1B	23-108-12
5525 A1Q	23-108-12
5525 A1R	23-108-12
5525 A1T	23-108-12
5526 A1B	23-108-12
5526 A1Q	23-108-12
5526 A1R	23-108-12
5526 A1T	23-108-12
5527 A1B	23-108-12
5527 A1Q	23-108-12
5527 A1R	23-108-12
5527 A1T	23-108-12
5528 A1B	23-108-12
5528 A1Q	23-108-12
5528 A1R	23-108-12
5528 A1T	23-108-12
5529 A1B	23-108-12
5529 A1Q	23-108-12
5529 A1R	23-108-12
5529 A1T	23-108-12
5530 A1B	23-108-12
5530 A1Q	23-108-12
5530 A1R	23-108-12
5530 A1T	23-108-12
5531 A1B	23-108-12
5531 A1Q	23-108-12
5531 A1R	23-108-12
5531 A1T	23-108-12
5532 A1B	23-108-12
5532 A1Q	23-108-12
5532 A1R	23-108-12
5532 A1T	23-108-12
5533 A1B	23-108-12
5533 A1Q	23-108-12
5533 A1R	23-108-12
5533 A1T	23-108-12
5534 A4B	23-108-12
5534 A4Q	23-108-12
5534 A4R	23-108-12

MyMopar.com

PART NUMBER	CODE	PART NUMBER	CODE	PART NUMBER	CODE	PART NUMBER	CODE	PART NUMBER	CODE
5534 A4T	23-108-12	5559 A1T	23-108-12	5594 A1B	23-108-12	5616 A1T	23-108-12	5643 A5R	23-108-12
5535 A4B	23-108-12	5562 A4B	23-108-12	5594 A1Q	23-108-12	5620 A4B	23-108-12	5643 A5T	23-108-12
5535 A4Q	23-108-12	5562 A4R	23-108-12	5594 A1R	23-108-12	5620 A4Q	23-108-12	5644 A5B	23-108-12
5535 A4R	23-108-12	5562 A4T	23-108-12	5594 A1T	23-108-12	5620 A4R	23-108-12	5644 A5R	23-108-12
5535 A4T	23-108-12	5563 A4B	23-108-12	5596 A1B	23-108-12	5620 A4T	23-108-12	5644 A5T	23-108-12
5536 A4B	23-108-12	5563 A4R	23-108-12	5596 A1Q	23-108-12	5621 A4B	23-108-12	5645 A5B	23-108-12
5536 A4Q	23-108-12	5563 A4T	23-108-12	5596 A1R	23-108-12	5621 A4Q	23-108-12	5645 A5R	23-108-12
5536 A4R	23-108-12	5565 A4B	23-108-12	5596 A1T	23-108-12	5621 A4R	23-108-12	5645 A5T	23-108-12
5536 A4T	23-108-12	5565 A4Q	23-108-12	5597 A4B	23-108-12	5621 A4T	23-108-12	5653 A4B	23-108-12
5537 A4B	23-108-12	5565 A4R	23-108-12	5597 A4Q	23-108-12	5622 A1B	23-108-12	5653 A4L	23-108-12
5537 A4Q	23-108-12	5565 A4T	23-108-12	5597 A4R	23-108-12	5622 A1Q	23-108-12	5653 A4N	23-108-12
5537 A4R	23-108-12	5566 A4B	23-108-12	5597 A4T	23-108-12	5622 A1R	23-108-12	5653 A4R	23-108-12
5537 A4T	23-108-12	5566 A4Q	23-108-12	5598 A4B	23-108-12	5622 A1T	23-108-12	5653 A4T	23-108-12
5538 A4B	23-108-12	5566 A4R	23-108-12	5598 A4Q	23-108-12	5624 A4B	23-108-12	5653 A4X	23-108-12
5538 A4Q	23-108-12	5566 A4X	23-108-12	5598 A4R	23-108-12	5624 A4R	23-108-12	5656 A8B	23-108-12
5538 A4R	23-108-12	5566 A4Y	23-108-12	5598 A4T	23-108-12	5624 A4T	23-108-12	5656 A8Q	23-108-12
5538 A4T	23-108-12	5566 A5R	23-108-12	5602 A1B	23-108-12	5625 A4B	23-108-12	5656 A8R	23-108-12
5541 A5B	23-108-12	5567 A4B	23-108-12	5602 A1Q	23-108-12	5625 A4R	23-108-12	5656 A8T	23-108-12
5541 A5R	23-108-12	5567 A4Q	23-108-12	5602 A1R	23-108-12	5625 A4T	23-108-12	5657 A8B	23-108-12
5541 A5T	23-108-12	5567 A4R	23-108-12	5602 A1T	23-108-12	5626 A1B	23-108-12	5657 A8Q	23-108-12
5542 A8T	23-108-12	5567 A4X	23-108-12	5604 A1B	23-108-12	5626 A1Q	23-108-12	5657 A8R	23-108-12
5543 A8T	23-108-12	5567 A4Y	23-108-12	5604 A1Q	23-108-12	5626 A1R	23-108-12	5657 A8T	23-108-12
5547 A1B	23-108-12	5567 A5R	23-108-12	5604 A1R	23-108-12	5626 A1T	23-108-12	5658 A4B	23-108-12
5547 A1R	23-108-12	5569 A4B	23-108-12	5604 A1T	23-108-12	5626 A1Y	23-108-12	5658 A4L	23-108-12
5547 A1T	23-108-12	5569 A4Q	23-108-12	5605 A1B	23-108-12	5627 A1B	23-108-12	5658 A4N	23-108-12
5548 A1B	23-108-12	5569 A4R	23-108-12	5605 A1Q	23-108-12	5627 A1Q	23-108-12	5658 A4R	23-108-12
5548 A1Q	23-108-12	5569 A4T	23-108-12	5605 A1R	23-108-12	5627 A1R	23-108-12	5658 A4T	23-108-12
5548 A1R	23-108-12	5569 A4X	23-108-12	5605 A1T	23-108-12	5627 A1T	23-108-12	5658 A4X	23-108-12
5548 A1T	23-108-12	5569 A4Y	23-108-12	5608 A1B	23-108-12	5627 A1Y	23-108-12	5659 A4B	23-108-12
5548 A1Y	23-108-12	5569 A5R	23-108-12	5608 A1Q	23-108-12	5630 A5B	23-108-12	5659 A4L	23-108-12
5549 A1B	23-108-12	5572 A2T	23-108-12	5608 A1R	23-108-12	5630 A5Q	23-108-12	5659 A4N	23-108-12
5549 A1R	23-108-12	5574 A2T	23-108-12	5608 A1T	23-108-12	5630 A5R	23-108-12	5659 A4R	23-108-12
5549 A1T	23-108-12	5575 A8T	23-108-12	5608 A1Y	23-108-12	5630 A5X	23-108-12	5659 A4T	23-108-12
5550 A1B	23-108-12	5576 A2T	23-108-12	5609 A1B	23-108-12	5630 A5Y	23-108-12	5659 A4X	23-108-12
5550 A1Q	23-108-12	5577 A2T	23-108-12	5609 A1Q	23-108-12	5631 A5B	23-108-12	5701 A4B	23-108-15
5550 A1R	23-108-12	5580 A2T	23-108-12	5609 A1R	23-108-12	5631 A5Q	23-108-12	5701 V5R	23-108-15
5550 A1T	23-108-12	5581 A2T	23-108-12	5609 A1T	23-108-12	5631 A5R	23-108-12	5701 V5X	23-108-15
5552 A1B	23-108-12	5582 A8T	23-108-12	5609 A1Y	23-108-12	5631 A5X	23-108-12	5701 V5Y	23-108-15
5552 A1R	23-108-12	5583 A1B	23-108-12	5612 A4B	23-108-12	5631 A5Y	23-108-12	5713 A4B	23-108-15
5552 A1T	23-108-12	5583 A1R	23-108-12	5612 A4Q	23-108-12	5636 A4B	23-108-12	5713 A4R	23-108-15
5553 A1B	23-108-12	5583 A1T	23-108-12	5612 A4R	23-108-12	5636 A4Q	23-108-12	5713 A4T	23-108-15
5553 A1R	23-108-12	5584 A8T	23-108-12	5612 A4T	23-108-12	5636 A4T	23-108-12	5713 A4X	23-108-15
5553 A1T	23-108-12	5585 A8T	23-108-12	5612 A4X	23-108-12	5636 A4X	23-108-12	5713 A4Y	23-108-15
5554 A1B	23-108-12	5587 A1B	23-108-12	5612 A4Y	23-108-12	5636 A4Y	23-108-12	5726 A4B	23-108-15
5554 A1Q	23-108-12	5587 A1R	23-108-12	5613 A4B	23-108-12	5637 A4B	23-108-12	5726 A4Q	23-108-15
5554 A1R	23-108-12	5587 A1T	23-108-12	5613 A4Q	23-108-12	5637 A4Q	23-108-12	5726 A4R	23-108-15
5554 A1T	23-108-12	5588 A8T	23-108-12	5613 A4R	23-108-12	5637 A4T	23-108-12	5726 A4X	23-108-15
5554 A1Y	23-108-12	5589 A8T	23-108-12	5613 A4T	23-108-12	5637 A4Y	23-108-12	5726 A4Y	23-108-15
5555 A1B	23-108-12	5590 A1B	23-108-12	5613 A4X	23-108-12	5638 A4B	23-108-12	5740 A4B	23-108-15
5555 A1Q	23-108-12	5590 A1R	23-108-12	5613 A4Y	23-108-12	5638 A4Q	23-108-12	5740 A4Q	23-108-15
5555 A1R	23-108-12	5590 A1T	23-108-12	5614 AB4	23-108-12	5638 A4R	23-108-12	5740 A4R	23-108-15
5555 A1T	23-108-12	5591 A1B	23-108-12	5614 ABB	23-108-12	5638 A4T	23-108-12	5740 A4T	23-108-15
5555 A1Y	23-108-12	5591 A1R	23-108-12	5614 AQQ	23-108-12	5639 A4B	23-108-12	5740 A4X	23-108-15
5558 A1B	23-108-12	5591 A1T	23-108-12	5614 AR5	23-108-12	5639 A4Q	23-108-12	5740 A4Y	23-108-15
5558 A1Q	23-108-12	5592 A1B	23-108-12	5614 ARR	23-108-12	5639 A4R	23-108-12	5754 A3R	23-108-15
5558 A1R	23-108-12	5592 A1R	23-108-12	5614 AT6	23-108-12	5639 A4T	23-108-12	5754 A3X	23-108-15
5558 A1T	23-108-12	5592 A1T	23-108-12	5614 ATT	23-108-12	5642 A5B	23-108-12	5755 A3R	23-108-15
5559 A1B	23-108-12	5593 A1B	23-108-12	5616 A1B	23-108-12	5642 A5R	23-108-12	5755 A3X	23-108-15
5559 A1Q	23-108-12	5593 A1R	23-108-12	5616 A1Q	23-108-12	5642 A5T	23-108-12	5756 A3R	23-108-15
5559 A1R	23-108-12	5593 A1T	23-108-12	5616 A1R	23-108-12	5643 A5B	23-108-12	5756 A3X	23-108-15

MyMopar.com

PART NUMBER	CODE
5757 A3R	23-108-15
5757 A3X	23-108-15
5762 A4B	23-108-15
5762 A4L	23-108-15
5762 A4R	23-108-15
5762 A4T	23-108-15
5762 A4X	23-108-15
5763 A4B	23-108-15
5763 A4L	23-108-15
5763 A4R	23-108-15
5763 A4T	23-108-15
5763 A4X	23-108-15
5764 A4B	23-108-15
5764 A4L	23-108-15
5764 A4R	23-108-15
5764 A4T	23-108-15
5764 A4X	23-108-15
5765 A4B	23-108-15
5765 A4L	23-108-15
5765 A4R	23-108-15
5765 A4T	23-108-15
5765 A4X	23-108-15
5767 A1B	23-108-15
5767 A1L	23-108-15
5767 A1N	23-108-15
5767 A1Q	23-108-15
5767 A1R	23-108-15
5767 A1T	23-108-15
5772 A1N	23-108-15
5773 A1N	23-108-15
5774 A1N	23-108-15
5775 A1N	23-108-15
5776 A4B	23-108-15
5776 A4L	23-108-15
5776 A4R	23-108-15
5776 A4T	23-108-15
5776 A4W	23-108-15
5776 A4X	23-108-15
5777 A4B	23-108-15
5777 A4L	23-108-15
5777 A4R	23-108-15
5777 A4T	23-108-15
5777 A4W	23-108-15
5777 A4X	23-108-15
5778 A4B	23-108-15
5778 A4L	23-108-15
5778 A4R	23-108-15
5778 A4T	23-108-15
5778 A4W	23-108-15
5778 A4X	23-108-15
5779 A4B	23-108-15
5779 A4L	23-108-15
5779 A4R	23-108-15
5779 A4T	23-108-15
5779 A4W	23-108-15
5779 A4X	23-108-15
5784 A7B	23-108-15
5784 A7G	23-108-15
5784 A7N	23-108-15
5784 A7P	23-108-15
5784 A7Q	23-108-15
5784 A7R	23-108-15
5784 A7T	23-108-15
5786 A3B	23-108-15
5786 A3K	23-108-15
5786 A3R	23-108-15
5786 A3T	23-108-15
5786 A3W	23-108-15
5786 A3X	23-108-15
5788 A7A	23-108-15
5788 A7B	23-108-15
5788 A7G	23-108-15
5788 A7T	23-108-15
5790 A8B	23-108-15
5790 A8G	23-108-15
5790 A8N	23-108-15
5791 A8B	23-108-15
5791 A8G	23-108-15
5791 A8N	23-108-15
5792 A9B	23-108-15
5792 A9K	23-108-15
5792 A9R	23-108-15
5792 A9T	23-108-15
5792 A9W	23-108-15
5792 A9X	23-108-15
5793 A9B	23-108-15
5793 A9K	23-108-15
5793 A9R	23-108-15
5793 A9T	23-108-15
5793 A9X	23-108-15
5801 A4B	23-108-5
5801 A4R	23-108-5
5801 A4T	23-108-5
5802 A1B	23-108-5
5802 A1Q	23-108-5
5802 A1R	23-108-5
5802 A1T	23-108-5
5803 A1B	23-108-5
5803 A1Q	23-108-5
5803 A1R	23-108-5
5803 A1T	23-108-5
5806 A4B	23-108-5
5806 A4R	23-108-5
5806 A4T	23-108-5
5807 A4B	23-108-5
5807 A4Q	23-108-5
5807 A4R	23-108-5
5807 A4T	23-108-5
5808 A4B	23-108-5
5808 A4Q	23-108-5
5808 A4R	23-108-5
5808 A4T	23-108-5
5809 A4B	23-108-5
5809 A5X	23-108-5
5809 V5R	23-108-5
5809 V5Y	23-108-5
5812 A1B	23-108-5
5812 A1Q	23-108-5
5812 A1R	23-108-5
5812 A1T	23-108-5
5813 A1B	23-108-5
5813 A1Q	23-108-5
5813 A1R	23-108-5
5813 A1T	23-108-5
5814 A1B	23-108-5
5814 A1Q	23-108-5
5814 A1R	23-108-5
5814 A1T	23-108-5
5815 A1B	23-108-5
5815 A1Q	23-108-5
5815 A1R	23-108-5
5815 A1T	23-108-5
5816 A4B	23-108-5
5816 A4Q	23-108-5
5816 A4R	23-108-5
5816 A4T	23-108-5
5817 A4B	23-108-5
5817 A4Q	23-108-5
5817 A4R	23-108-5
5817 A4T	23-108-5
5818 A4B	23-108-5
5818 A4Q	23-108-5
5818 A4R	23-108-5
5818 A4T	23-108-5
5819 A4B	23-108-5
5819 A4R	23-108-5
5819 A4T	23-108-5
5819 A4X	23-108-5
5819 A4Y	23-108-5
5819 A8R	23-108-5
5820 A5B	23-108-5
5820 A5R	23-108-5
5820 A5T	23-108-5
5821 A2B	23-108-5
5821 A2Q	23-108-5
5821 A2R	23-108-5
5821 A2T	23-108-5
5821 A2Y	23-108-5
5823 A1B	23-108-5
5823 A1R	23-108-5
5823 A1T	23-108-5
5824 A1B	23-108-5
5824 A1Q	23-108-5
5824 A1R	23-108-5
5824 A1T	23-108-5
5825 A1B	23-108-5
5825 A1R	23-108-5
5825 A1T	23-108-5
5826 A1B	23-108-5
5826 A1Q	23-108-5
5826 A1R	23-108-5
5826 A1T	23-108-5
5827 A1B	23-108-5
5827 A1Q	23-108-5
5827 A1R	23-108-5
5827 A1T	23-108-5
5827 A1Y	23-108-5
5828 A1B	23-108-5
5828 A1Q	23-108-5
5828 A1R	23-108-5
5828 A1T	23-108-5
5828 A1Y	23-108-5
5829 A4B	23-108-5
5829 A4R	23-108-5
5829 A4T	23-108-5
5830 A4B	23-108-5
5830 A4Q	23-108-5
5830 A4R	23-108-5
5830 A4T	23-108-5
5830 A4Y	23-108-5
5830 A5R	23-108-5
5831 A4B	23-108-5
5831 A4Q	23-108-5
5831 A4R	23-108-5
5831 A4X	23-108-5
5831 A4Y	23-108-5
5831 A5R	23-108-5
5832 A4B	23-108-5
5832 A4Q	23-108-5
5832 A4R	23-108-5
5832 A4T	23-108-5
5834 A4B	23-108-5
5834 A4Q	23-108-5
5834 A4R	23-108-5
5834 A4X	23-108-5
5834 A4Y	23-108-5
5834 A5R	23-108-5
5835 A2T	23-108-5
5836 A2T	23-108-5
5837 A8T	23-108-5
5838 A8T	23-108-5
5840 A1B	23-108-5
5840 A1R	23-108-5
5840 A1T	23-108-5
5841 A1B	23-108-5
5841 A1R	23-108-5
5841 A1T	23-108-5
5842 A4B	23-108-5
5842 A4R	23-108-5
5842 A4T	23-108-5
5843 A1B	23-108-5
5843 A1Q	23-108-5
5843 A1R	23-108-5
5843 A1T	23-108-5
5844 A1B	23-108-5
5844 A1Q	23-108-5
5844 A1R	23-108-5
5844 A1T	23-108-5
5845 A4B	23-108-5
5845 A4Q	23-108-5
5845 A4R	23-108-5
5845 A4T	23-108-5
5847 A1B	23-108-5
5847 A1Q	23-108-5
5847 A1R	23-108-5
5847 A1T	23-108-5
5847 A1Y	23-108-5
5849 AB4	23-108-5
5849 ABB	23-108-5
5849 AQQ	23-108-5
5849 AR5	23-108-5
5849 ARR	23-108-5
5849 AT6	23-108-5
5849 ATT	23-108-5
5850 A1B	23-108-5
5850 A1Q	23-108-5
5850 A1R	23-108-5
5850 A1T	23-108-5
5851 A4B	23-108-5
5851 A4Q	23-108-5
5851 A4R	23-108-5
5851 A4T	23-108-5
5851 A4X	23-108-5
5851 A4Y	23-108-5
5852 A4B	23-108-5
5852 A4Q	23-108-5
5852 A4R	23-108-5
5852 A4T	23-108-5
5853 A1B	23-108-5
5853 A1Q	23-108-5
5853 A1R	23-108-5
5853 A1T	23-108-5
5854 A1B	23-108-5
5854 A1Q	23-108-5
5854 A1R	23-108-5
5854 A1T	23-108-5
5854 A1Y	23-108-5
5856 A5B	23-108-5
5856 A5Q	23-108-5
5856 A5R	23-108-5
5856 A5X	23-108-5
5856 A5Y	23-108-5
5858 A4B	23-108-5
5858 A4Q	23-108-5
5858 A4R	23-108-5
5858 A4T	23-108-5
5858 A4Y	23-108-5
5861 A5B	23-108-5
5861 A5R	23-108-5
5861 A5T	23-108-5
5862 A4B	23-108-5
5862 A4Q	23-108-5
5862 A4R	23-108-5
5862 A4T	23-108-5
5862 A4X	23-108-5
5862 A4Y	23-108-5
5863 A5B	23-108-5
5863 A5R	23-108-5
5863 A5T	23-108-5
5864 AB4	23-108-5
5864 AF9	23-108-5
5864 AL3	23-108-5
5864 AM9	23-108-5
5864 AR5	23-108-5
5864 AW3	23-108-5

MyMopar.com

PART NUMBER	CODE
5864 AX9	23-108-5
5872 A8B	23-108-5
5872 A8Q	23-108-5
5872 A8R	23-108-5
5872 A8T	23-108-5
5873 A4B	23-108-5
5873 A4L	23-108-5
5873 A4N	23-108-5
5873 A4R	23-108-5
5873 A4T	23-108-5
5873 A4X	23-108-5
5877 A1B	23-108-5
5877 A1L	23-108-5
5877 A1N	23-108-5
5877 A1Q	23-108-5
5877 A1R	23-108-5
5877 A1T	23-108-5
5880 A1N	23-108-5
5881 A1N	23-108-5
5882 A4B	23-108-5
5882 A4L	23-108-5
5882 A4R	23-108-5
5882 A4T	23-108-5
5882 A4W	23-108-5
5882 A4X	23-108-5
5883 A4B	23-108-5
5883 A4L	23-108-5
5883 A4R	23-108-5
5883 A4T	23-108-5
5883 A4W	23-108-5
5883 A4X	23-108-5
5886 A4B	23-108-5
5886 A4L	23-108-5
5886 A4R	23-108-5
5886 A4T	23-108-5
5886 A4X	23-108-5
5887 A4B	23-108-5
5887 A4L	23-108-5
5887 A4R	23-108-5
5887 A4T	23-108-5
5887 A4X	23-108-5
5888 A3R	23-108-5
5888 A3X	23-108-5
5889 A3R	23-108-5
5889 A3X	23-108-5
5893 A7B	23-108-5
5893 A7G	23-108-5
5893 A7N	23-108-5
5893 A7P	23-108-5
5893 A7Q	23-108-5
5893 A7R	23-108-5
5893 A7T	23-108-5
5894 A7A	23-108-5
5894 A7B	23-108-5
5894 A7G	23-108-5
5894 A7T	23-108-5
5895 A3B	23-108-5
5895 A3K	23-108-5
5895 A3R	23-108-5
5895 A3T	23-108-5
5895 A3W	23-108-5
5895 A3X	23-108-5
5896 A8B	23-108-5
5896 A8G	23-108-5
5896 A8N	23-108-5
5897 A8A	23-108-5
5897 A8B	23-108-5
5897 A8G	23-108-5
5898 A9B	23-108-5
5898 A8K	23-108-5
5898 A9T	23-108-5
5898 A9W	23-108-5
5898 A9X	23-108-5
5899 A9B	23-108-5
5899 A9K	23-108-5
5899 A9T	23-108-5
5899 A9W	23-108-5
5899 A9X	23-108-5
5901 A1B	23-108-16
5901 A1Q	23-108-16
5901 A1R	23-108-16
5901 A1T	23-108-16
5902 A4B	23-108-16
5902 A4R	23-108-16
5902 A4T	23-108-16
5903 A4B	23-108-16
5903 A4R	23-108-16
5903 A4T	23-108-16
5904 A1B	23-108-16
5904 A1Q	23-108-16
5904 A1R	23-108-16
5904 A1T	23-108-16
5905 A1B	23-108-16
5905 A1Q	23-108-16
5905 A1R	23-108-16
5905 A1T	23-108-16
5907 A4B	23-108-16
5907 A4R	23-108-16
5907 A4T	23-108-16
5908 A4B	23-108-16
5908 A4Q	23-108-16
5908 A4R	23-108-16
5908 A4T	23-108-16
5909 A4B	23-108-16
5909 A4Q	23-108-16
5909 A4R	23-108-16
5909 A4T	23-108-16
5910 A4B	23-108-16
5910 A4Q	23-108-16
5910 A4R	23-108-16
5910 A4T	23-108-16
5911 A4B	23-108-16
5911 V5R	23-108-16
5911 V5X	23-108-16
5911 V5Y	23-108-16
5912 A2B	23-108-16
5912 A2Q	23-108-16
5912 A2R	23-108-16
5912 A2T	23-108-16
5912 A2Y	23-108-16
5913 A2B	23-108-16
5913 A2Q	23-108-16
5913 A2R	23-108-16
5913 A2T	23-108-16
5913 A2Y	23-108-16
5926 A1B	23-108-16
5926 A1Q	23-108-16
5926 A1R	23-108-16
5926 A1T	23-108-16
5927 A1B	23-108-16
5927 A1Q	23-108-16
5927 A1R	23-108-16
5927 A1T	23-108-16
5928 A1B	23-108-16
5928 A1Q	23-108-16
5928 A1R	23-108-16
5928 A1T	23-108-16
5929 A1B	23-108-16
5929 A1Q	23-108-16
5929 A1R	23-108-16
5929 A1T	23-108-16
5930 A1B	23-108-16
5930 A1Q	23-108-16
5930 A1R	23-108-16
5930 A1T	23-108-16
5931 A1B	23-108-16
5931 A1Q	23-108-16
5931 A1R	23-108-16
5931 A1T	23-108-16
5932 A4B	23-108-16
5932 A4Q	23-108-16
5932 A4R	23-108-16
5932 A4T	23-108-16
5933 A4B	23-108-16
5933 A4Q	23-108-16
5933 A4R	23-108-16
5933 A4T	23-108-16
5934 A4B	23-108-16
5934 A4Q	23-108-16
5934 A4R	23-108-16
5934 A4T	23-108-16
5935 A4B	23-108-16
5935 A4Q	23-108-16
5935 A4R	23-108-16
5935 A4T	23-108-16
5936 A4B	23-108-16
5936 A4R	23-108-16
5936 A4T	23-108-16
5936 A4X	23-108-16
5936 A4Y	23-108-16
5936 A8R	23-108-16
5937 A5B	23-108-16
5937 A5R	23-108-16
5937 A5T	23-108-16
5951 A1B	23-108-16
5951 A1R	23-108-16
5951 A1T	23-108-16
5952 A1B	23-108-16
5952 A1Q	23-108-16
5952 A1T	23-108-16
5953 A4B	23-108-16
5953 A4R	23-108-16
5953 A4T	23-108-16
5954 A1B	23-108-16
5954 A1R	23-108-16
5954 A1T	23-108-16
5955 A1B	23-108-16
5955 A1R	23-108-16
5955 A1T	23-108-16
5956 A1B	23-108-16
5956 A1Q	23-108-16
5956 A1R	23-108-16
5956 A1T	23-108-16
5957 A1B	23-108-16
5957 A1Q	23-108-16
5957 A1R	23-108-16
5957 A1T	23-108-16
5958 A1B	23-108-16
5958 A1Q	23-108-16
5958 A1R	23-108-16
5958 A1T	23-108-16
5958 A1Y	23-108-16
5959 A1B	23-108-16
5959 A1Q	23-108-16
5959 A1R	23-108-16
5959 A1T	23-108-16
5959 A1Y	23-108-16
5960 A1B	23-108-16
5960 A1Q	23-108-16
5960 A1R	23-108-16
5960 A1T	23-108-16
5960 A1Y	23-108-16
5962 A4B	23-108-16
5962 A4Q	23-108-16
5962 A4R	23-108-16
5962 A4X	23-108-16
5962 A4Y	23-108-16
5962 A5R	23-108-16
5963 A4B	23-108-16
5963 A4Q	23-108-16
5963 A4R	23-108-16
5963 A4X	23-108-16
5963 A4Y	23-108-16
5963 A5R	23-108-16
5964 A4R	23-108-16
5964 A4T	23-108-16
5965 A4B	23-108-16
5965 A4Q	23-108-16
5965 A4R	23-108-16
5965 A4T	23-108-16
5965 A4Y	23-108-16
5965 A5R	23-108-16
5966 A4B	23-108-16
5966 A4Q	23-108-16
5966 A4R	23-108-16
5966 A4X	23-108-16
5966 A4Y	23-108-16
5966 A5R	23-108-16
5967 A2T	23-108-16
5968 A2T	23-108-16
5969 A2T	23-108-16
5970 A8T	23-108-16
5972 A8T	23-108-16
5973 A8T	23-108-16
5974 A1B	23-108-16
5974 A1R	23-108-16
5974 A1T	23-108-16
5975 A1B	23-108-16
5975 A1R	23-108-16
5975 A1T	23-108-16
5976 A1B	23-108-16
5976 A1R	23-108-16
5976 A1T	23-108-16
5977 A4B	23-108-16
5977 A4R	23-108-16
5977 A4T	23-108-16
5978 A1B	23-108-16
5978 A1Q	23-108-16
5978 A1R	23-108-16
5978 A1T	23-108-16
5978 A1Y	23-108-16
5982 A5B	23-108-16
5982 A5Q	23-108-16
5982 A5R	23-108-16
5982 A5X	23-108-16
5982 A5Y	23-108-16
5983 A5B	23-108-16
5983 A5Q	23-108-16
5983 A5R	23-108-16
5983 A5X	23-108-16
5983 A5Y	23-108-16
5985 A8A	23-108-16
5985 A8T	23-108-16
5993 A1B	23-108-16
5993 A1Q	23-108-16
5993 A1R	23-108-16
5993 A1T	23-108-16
5994 A1B	23-108-16
5994 A1Q	23-108-16
5994 A1R	23-108-16
5994 A1T	23-108-16
5995 A1B	23-108-16
5995 A1Q	23-108-16
5995 A1R	23-108-16
5995 A1T	23-108-16
5996 A4B	23-108-16
5996 A4Q	23-108-16
5996 A4R	23-108-16
5996 A4T	23-108-16
5998 A1B	23-108-16
5998 A1Q	23-108-16
5998 A1R	23-108-16
5998 A1T	23-108-16

MyMopar.com

PART NUMBER	CODE
5998 A1Y	23-108-16
5999 A1B	23-108-16
5999 A1Q	23-108-16
5999 A1R	23-108-16
5999 A1T	23-108-16
5999 A1Y	23-108-16
6000 A4B	23-108-16
6000 A4Q	23-108-16
6000 A4R	23-108-16
6000 A4T	23-108-16
6000 A4X	23-108-16
6000 A4Y	23-108-16
6001 AB4	23-108-16
6001 ABB	23-108-16
6001 AQQ	23-108-16
6001 AR5	23-108-16
6001 ARR	23-108-16
6001 AT6	23-108-16
6001 ATT	23-108-16
6002 A1B	23-108-16
6002 A1Q	23-108-16
6002 A1R	23-108-16
6002 A1T	23-108-16
6004 A4B	23-108-16
6004 A4Q	23-108-16
6004 A4R	23-108-16
6004 A4T	23-108-16
6004 A4X	23-108-16
6004 A4Y	23-108-16
6006 A4B	23-108-16
6006 A4Q	23-108-16
6006 A4R	23-108-16
6006 A4T	23-108-16
6007 A4B	23-108-16
6007 A4Q	23-108-16
6007 A4R	23-108-16
6007 A4T	23-108-16
6008 A1B	23-108-16
6008 A1Q	23-108-16
6008 A1R	23-108-16
6008 A1T	23-108-16
6009 A1B	23-108-16
6009 A1Q	23-108-16
6009 A1R	23-108-16
6009 A1T	23-108-16
6026 A4B	23-108-16
6026 A4Q	23-108-16
6026 A4R	23-108-16
6026 A4T	23-108-16
6026 A4X	23-108-16
6026 A4Y	23-108-16
6027 A4B	23-108-16
6027 A4Q	23-108-16
6027 A4R	23-108-16
6027 A4T	23-108-16
6027 A4X	23-108-16
6027 A4Y	23-108-16
6030 A5B	23-108-16
6030 A5R	23-108-16
6030 A5T	23-108-16
6032 A5B	23-108-16
6032 A5R	23-108-16
6032 A5T	23-108-16
6052 A8B	23-108-16
6052 A8Q	23-108-16
6052 A8T	23-108-16
6053 A8B	23-108-16
6053 A8Q	23-108-16
6053 A8T	23-108-16
6054 A4B	23-108-16
6054 A4L	23-108-16
6054 A4N	23-108-16
6054 A4R	23-108-16
6054 A4T	23-108-16
6054 A4X	23-108-16
6055 A4B	23-108-16
6055 A4L	23-108-16
6055 A4N	23-108-16
6055 A4R	23-108-16
6055 A4T	23-108-16
6055 A4X	23-108-16
6058 A1B	23-108-16
6058 A1L	23-108-16
6058 A1N	23-108-16
6058 A1Q	23-108-16
6058 A1R	23-108-16
6058 A1T	23-108-16
6064 A1N	23-108-16
6065 A1N	23-108-16
6066 A4B	23-108-16
6066 A4L	23-108-16
6066 A4R	23-108-16
6066 A4T	23-108-16
6066 A4W	23-108-16
6066 A4X	23-108-16
6067 A4B	23-108-16
6067 A4L	23-108-16
6067 A4R	23-108-16
6067 A4T	23-108-16
6067 A4W	23-108-16
6067 A4X	23-108-16
6070 A4L	23-108-16
6070 A4R	23-108-16
6070 A4T	23-108-16
6070 A4X	23-108-16
6071 A4L	23-108-16
6071 A4R	23-108-16
6071 A4T	23-108-16
6071 A4X	23-108-16
6072 A3R	23-108-16
6072 A3X	23-108-16
6073 A3R	23-108-16
6073 A3X	23-108-16
6078 A7B	23-108-16
6078 A7G	23-108-16
6078 A7N	23-108-16
6078 A7P	23-108-16
6078 A7Q	23-108-16
6078 A7R	23-108-16
6078 A7T	23-108-16
6080 A3B	23-108-16
6080 A3C	23-108-16
6080 A3K	23-108-16
6080 A3R	23-108-16
6080 A3T	23-108-16
6080 A3V	23-108-16
6080 A3W	23-108-16
6080 A3X	23-108-16
6082 A7A	23-108-16
6082 A7B	23-108-16
6082 A7G	23-108-16
6082 A7B	23-108-16
6084 A8B	23-108-16
6084 A8G	23-108-16
6084 A8N	23-108-16
6085 A8B	23-108-16
6085 A8G	23-108-16
6085 A8N	23-108-16
6086 A9B	23-108-16
6086 A9K	23-108-16
6086 A9R	23-108-16
6086 A9T	23-108-16
6086 A9W	23-108-16
6086 A9X	23-108-16
6087 A9B	23-108-16
6087 A9K	23-108-16
6087 A9R	23-108-16
6087 A9T	23-108-16
6087 A9W	23-108-16
6087 A9X	23-108-16
6102 A4B	23-108-32
6102 V5R	23-108-32
6102 V5X	23-108-32
6102 V5Y	23-108-32
6103 A4B	23-108-32
6109 VW1	23-86-2
6109 VX8	23-86-2
6112 A4B	23-108-32
6112 A4R	23-108-32
6112 A4T	23-108-32
6112 A4X	23-108-32
6112 A4Y	23-108-32
6112 A8R	23-108-32
6114 ABB	23-108-32
6114 ALL	23-108-32
6114 AOF	23-108-32
6114 AOM	23-108-32
6114 AOR	23-108-32
6114 AQQ	23-108-32
6114 AWB	23-108-32
6114 AWR	23-108-32
6114 AWX	23-108-32
6114 AXX	23-108-32
6117 AB4	23-108-32
6117 AF9	23-108-32
6117 AL3	23-108-32
6117 AM9	23-108-32
6117 AQ4	23-108-32
6117 AR5	23-108-32
6117 AW3	23-108-32
6117 AX9	23-108-32
6119 AX8	23-79-64
6119 VB8	23-79-64
6119 VR6	23-79-64
6119 VY8	23-79-64
6122 A4B	23-108-32
6122 A4Q	23-108-32
6122 A4R	23-108-32
6122 A4X	23-108-32
6122 A4Y	23-108-32
6133 A4B	23-108-32
6133 A4Q	23-108-32
6133 A4R	23-108-32
6133 A4T	23-108-32
6133 A4X	23-108-32
6133 A4Y	23-108-32
6153 A1B	23-108-32
6153 A1L	23-108-32
6153 A1N	23-108-32
6153 A1Q	23-108-32
6153 A1R	23-108-32
6153 A1T	23-108-32
6154 A1B	23-108-32
6154 A1L	23-108-32
6154 A1N	23-108-32
6154 A1Q	23-108-32
6154 A1R	23-108-32
6154 A1T	23-108-32
6160 A9B	23-108-32
6160 A9R	23-108-32
6160 A9X	23-108-32
6162 A1B	23-108-32
6162 A1L	23-108-32
6162 A1N	23-108-32
6162 A1Q	23-108-32
6162 A1R	23-108-32
6162 A1T	23-108-32
6163 A1B	23-108-32
6163 A1L	23-108-32
6163 A1N	23-108-32
6163 A1Q	23-108-32
6163 A1R	23-108-32
6163 A1T	23-108-32
6184 AB4	23-108-32
6184 AF9	23-108-32
6184 AL3	23-108-32
6184 AM9	23-108-32
6184 AR5	23-108-32
6184 AW3	23-108-32
6184 AX9	23-108-32
6200 A4B	23-109-35
6200 A4R	23-109-35
6200 A4T	23-109-35
6204 A1B	23-109-35
6204 A1Q	23-109-35
6204 A1R	23-109-35
6204 A1T	23-109-35
6205 A1B	23-109-35
6205 A1Q	23-109-35
6205 A1R	23-109-35
6205 A1T	23-109-35
6206 A4B	23-109-35
6206 A4R	23-109-35
6206 A4X	23-109-35
6206 A4Y	23-109-35
6207 A4B	23-109-35
6207 V5R	23-109-35
6207 V5X	23-109-35
6207 V5Y	23-109-35
6208 A4B	23-109-35
6208 A4R	23-109-35
6208 A4X	23-109-35
6208 A4Y	23-109-35
6210 A4B	23-109-35
6210 A4R	23-109-35
6210 A4T	23-109-35
6211 A4B	23-109-35
6211 A4Q	23-109-35
6211 A4R	23-109-35
6211 A4T	23-109-35
6213 A4B	23-109-35
6213 A4Q	23-109-35
6213 A4R	23-109-35
6213 A4T	23-109-35
6214 A4B	23-109-35
6214 A4Q	23-109-35
6214 A4R	23-109-35
6214 A4T	23-109-35
6215 A4B	23-109-36
6215 V4R	23-109-36
6215 V4X	23-109-36
6215 V4Y	23-109-36
6219 A1B	23-109-35
6219 A1R	23-109-35
6219 A1T	23-109-35
6220 A1B	23-109-35
6220 A1R	23-109-35
6220 A1T	23-109-35
6222 A1B	23-109-35
6222 A1Q	23-109-35
6222 A1R	23-109-35
6222 A1T	23-109-35
6222 A1Y	23-109-35
6227 A1B	23-109-35
6227 A1Q	23-109-35
6227 A1R	23-109-35
6227 A1T	23-109-35
6228 A1B	23-109-35
6228 A1Q	23-109-35
6228 A1R	23-109-35
6228 A1T	23-109-35
6229 A4B	23-109-35
6229 A4Q	23-109-35
6229 A4R	23-109-35
6229 A4T	23-109-35
6230 A4Q	23-109-35

MyMopar.com

PART NUMBER	CODE
6230 A4R	23-109-35
6230 A4T	23-109-35
6231 A4B	23-109-35
6231 A4R	23-109-35
6231 A4T	23-109-35
6232 A4B	23-109-35
6232 A4Q	23-109-35
6232 A4R	23-109-35
6232 A4T	23-109-35
6233 A4B	23-109-35
6233 A4R	23-109-35
6233 A4T	23-109-35
6233 A4X	23-109-35
6233 A4Y	23-109-35
6234 A4B	23-109-35
6234 A4R	23-109-35
6234 A4T	23-109-35
6234 A4X	23-109-35
6234 A4Y	23-109-35
6235 A1B	23-109-35
6235 A1Q	23-109-35
6235 A1R	23-109-35
6235 A1T	23-109-35
6237 A5B	23-109-35
6237 A5R	23-109-35
6237 A5T	23-109-35
6238 A1B	23-109-35
6238 A1Q	23-109-35
6239 A4R	23-109-35
6239 A4T	23-109-35
6239 A4U	23-109-35
6239 A4X	23-109-35
6241 A5B	23-109-35
6241 A5Q	23-109-35
6241 A5R	23-109-35
6241 A5X	23-109-35
6241 A5Y	23-109-35
6262 A5B	23-109-35
6242 A5R	23-109-35
6242 A5T	23-109-35
6244 A5B	23-109-35
6244 A5R	23-109-35
6244 A5T	23-109-35
6245 A5B	23-109-35
6245 A5R	23-109-35
6245 A5T	23-109-35
6246 A1B	23-109-35
6246 A1Q	23-109-35
6246 A1R	23-109-35
6246 A1T	23-109-35
6246 A1Y	23-109-35
6247 A1B	23-109-35
6247 A1Q	23-109-35
6247 A1R	23-109-35
6247 A1T	23-109-35
6247 A1Y	23-109-35
6248 A1B	23-109-35
6248 A1Q	23-109-35
6248 A1R	23-109-35
6248 A1T	23-109-35
6248 A1Y	23-109-35
6249 A1B	23-109-35
6249 A1Q	23-109-35
6249 A1R	23-109-35
6249 A1T	23-109-35
6249 A1Y	23-109-35
6251 A1B	23-109-35
6251 A1R	23-109-35
6251 A1T	23-109-35
6253 A1B	23-109-35
6253 A1R	23-109-35
6253 A1T	23-109-35
6256 A1B	23-109-35
6256 A1Q	23-109-35
6256 A1R	23-109-35
6256 A1T	23-109-35
6259 A5B	23-109-35
6259 A5Q	23-109-35
6259 A5R	23-109-35
6259 A5X	23-109-35
6259 A4Y	23-109-35
6260 A4B	23-109-35
6260 A4Q	23-109-35
6260 A4R	23-109-35
6260 A4U	23-109-35
6260 A4X	23-109-35
6260 A4Y	23-109-35
6261 A1B	23-109-35
6261 A1Q	23-109-35
6261 A1R	23-109-35
6261 A1T	23-109-35
6261 A1Y	23-109-35
6263 A1B	23-109-35
6263 A1Q	23-109-35
6263 A1R	23-109-35
6263 A1T	23-109-35
6263 A1Y	23-109-35
6265 A4B	23-109-35
6265 A4R	23-109-35
6265 A4T	23-109-35
6268 A4B	23-109-35
6268 A4Q	23-109-35
6268 A4R	23-109-35
6268 A4T	23-109-35
6268 A4Y	23-109-35
6268 A5R	23-109-35
6269 A4B	23-109-35
6269 A4Q	23-109-35
6269 A4R	23-109-35
6269 A4T	23-109-35
6269 A4Y	23-109-35
6269 A5R	23-109-35
6271 A4B	23-109-35
6271 A4Q	23-109-35
6271 A4R	23-109-35
6271 A4X	23-109-35
6271 A4Y	23-109-35
6271 A5R	23-109-35
6273 A4B	23-109-35
6273 A4Q	23-109-35
6273 A4R	23-109-35
6273 A4T	23-109-35
6274 A4B	23-109-35
6274 A4Q	23-109-35
6274 A4R	23-109-35
6274 A4T	23-109-35
6274 A4Y	23-109-35
6274 A4R	23-109-35
6278 A4B	23-109-35
6278 A4Q	23-109-35
6278 A4R	23-109-35
6278 A4X	23-109-35
6278 A4Y	23-109-35
6278 A5R	23-109-35
6279 A4B	23-109-35
6279 A4Q	23-109-35
6279 A4R	23-109-35
6279 A4X	23-109-35
6279 A4Y	23-109-35
6279 A5R	23-109-35
6280 A2T	23-109-35
6282 A2T	23-109-35
6284 A8T	23-109-35
6286 A8T	23-109-35
6289 A1B	23-109-35
6289 A1Q	23-109-35
6289 A1R	23-109-35
6289 A1T	23-109-35
6291 A1B	23-109-35
6291 A1Q	23-109-35
6291 A1R	23-109-35
6291 A1T	23-109-35
6293 A4B	23-109-35
6293 A4Q	23-109-35
6293 A4R	23-109-35
6293 A4T	23-109-35
6294 A4B	23-109-35
6294 A4Q	23-109-35
6294 A4R	23-109-35
6294 A4T	23-109-35
6295 A1B	23-109-35
6295 A1Q	23-109-35
6295 A1R	23-109-35
6295 A1T	23-109-35
6295 A1Y	23-109-35
6296 A1B	23-109-35
6296 A1Q	23-109-35
6296 A1R	23-109-35
6296 A1Y	23-109-35
6298 A5B	23-109-35
6298 A5R	23-109-35
6298 A5T	23-109-35
6300 A1B	23-109-35
6300 A1Q	23-109-35
6300 A1R	23-109-35
6300 A1T	23-109-35
6302 A4B	23-109-35
6302 A4Q	23-109-35
6302 A4R	23-109-35
6302 A4T	23-109-35
6304 A1B	23-109-35
6304 A1Q	23-109-35
6304 A1R	23-109-35
6304 A1T	23-109-35
6316 A4B	23-109-35
6316 A4Q	23-109-35
6316 A4R	23-109-35
6316 A4T	23-109-35
6316 A4Y	23-109-35
6317 A4B	23-109-35
6317 A4Q	23-109-35
6317 A4R	23-109-35
6317 A4T	23-109-35
6317 A4X	23-109-35
6317 A4Y	23-109-35
6324 A4B	23-109-35
6324 A4Q	23-109-35
6324 A4R	23-109-35
6324 A4T	23-109-35
6324 A4X	23-109-35
6325 A4B	23-109-35
6325 A4Q	23-109-35
6325 A4R	23-109-35
6325 A4T	23-109-35
6325 A4X	23-109-35
6326 A4B	23-109-35
6326 A4Q	23-109-35
6326 A4R	23-109-35
6326 A4U	23-109-35
6326 A4X	23-109-35
6326 A4Y	23-109-35
6332 A4B	23-109-35
6332 A4R	23-109-35
6332 A4T	23-109-35
6335 A4B	23-109-35
6335 A4Q	23-109-35
6335 A4R	23-109-35
6335 A4T	23-109-35
6335 A4Y	23-109-35
6337 A4B	23-109-35
6337 A4R	23-109-35
6337 A4T	23-109-35
6338 A4B	23-109-35
6338 A4Q	23-109-35
6338 A4R	23-109-35
6338 A4T	23-109-35
6338 A4Y	23-109-35
6339 A4B	23-109-35
6339 A4Q	23-109-35
6339 A4R	23-109-35
6339 A4T	23-109-35
6339 A4Y	23-109-35
6340 A1B	23-109-35
6340 A1Q	23-109-35
6340 A1R	23-109-35
6340 A1T	23-109-35
6340 A1Y	23-109-35
6341 A1B	23-109-35
6341 A1Q	23-109-35
6341 A1R	23-109-35
6341 A1T	23-109-35
6341 A1Y	23-109-35
6343 A5B	23-109-35
6343 A5Q	23-109-35
6343 A5R	23-109-35
6343 A5X	23-109-35
6343 A5Y	23-109-35
6345 A2B	23-109-35
6345 A2Q	23-109-35
6345 A2R	23-109-35
6345 A2T	23-109-35
6345 A2Y	23-109-35
6346 A1B	23-109-35
6346 A1N	23-109-35
6346 A1Q	23-109-35
6346 A1R	23-109-35
6346 A1T	23-109-35
6347 A1B	23-109-35
6347 A1N	23-109-35
6347 A1T	23-109-35
6347 A1Q	23-109-35
6347 A1R	23-109-35
6350 A8B	23-109-35
6350 A8Q	23-109-35
6350 A8R	23-109-35
6350 A8T	23-109-35
6351 A8B	23-109-35
6351 A8Q	23-109-35
6351 A8R	23-109-35
6351 A8T	23-109-35
6352 A4B	23-109-35
6352 A4L	23-109-35
6352 A4N	23-109-35
6352 A4R	23-109-35
6353 A4B	23-109-35
6353 A4R	23-109-35
6353 A4T	23-109-35
6353 A4X	23-109-35
6354 A8B	23-109-35
6354 A8Q	23-109-35
6354 A8R	23-109-35
6354 A8T	23-109-35
6355 A8B	23-109-35
6355 A8Q	23-109-35
6355 A8R	23-109-35
6355 A8T	23-109-35
6356 A4B	23-109-35
6356 A4L	23-109-35
6356 A4N	23-109-35
6356 A4R	23-109-35
6357 A4B	23-109-35
6357 A4L	23-109-35
6357 A4R	23-109-35
6357 A4T	23-109-35
6357 A4X	23-109-35

MyMopar.com

PART NUMBER	CODE
6358 A1N	23-109-35
6359 A4B	23-109-35
6359 A4R	23-109-35
6359 A4T	23-109-35
6359 A4X	23-109-35
6360 A4B	23-109-35
6360 A4L	23-109-35
6360 A4R	23-109-35
6360 A4T	23-109-35
6360 A4W	23-109-35
6360 A4X	23-109-35
6366 A1B	23-109-35
6366 A1L	23-109-35
6366 A1N	23-109-35
6366 A1Q	23-109-35
6366 A1R	23-109-35
6366 A1T	23-109-35
6369 A4B	23-109-35
6369 A4L	23-109-35
6369 A4R	23-109-35
6369 A4X	23-109-35
6370 A1N	23-109-35
6371 A4B	23-109-35
6371 A4R	23-109-35
6371 A4T	23-109-35
6371 A4X	23-109-35
6373 A3R	23-109-35
6373 A3X	23-109-35
6374 A3R	23-109-35
6374 A3X	23-109-35
6374 A4B	23-109-35
6374 A4L	23-109-35
6374 A4R	23-109-35
6374 A4T	23-109-35
6374 A4W	23-109-35
6374 A4X	23-109-35
6375 A2B	23-109-35
6375 A2L	23-109-35
6375 A2N	23-109-35
6375 A2Q	23-109-35
6375 A2R	23-109-35
6375 A2T	23-109-35
6376 A2B	23-109-35
6376 A2L	23-109-35
6376 A2N	23-109-35
6376 A2Q	23-109-35
6376 A2R	23-109-35
6376 A2T	23-109-35
6377 A4B	23-109-35
6377 A4Q	23-109-35
6377 A4R	23-109-35
6377 A4T	23-109-35
6377 A4X	23-109-35
6378 A4B	23-109-35
6378 A4Q	23-109-35
6378 A4R	23-109-35
6378 A4T	23-109-35
6378 A4X	23-109-35
6382 A7B	23-109-35
6382 A7G	23-109-35
6382 A7N	23-109-35
6382 A7P	23-109-35
6382 A7Q	23-109-35
6382 A7R	23-109-35
6382 A7T	23-109-35
6383 A3B	23-109-35
6383 A3C	23-109-35
6383 A3K	23-109-35
6383 A3R	23-109-35
6383 A3T	23-109-35
6383 A3V	23-109-35
6383 A3W	23-109-35
6383 A3X	23-109-35
6384 A7A	23-109-35
6384 A7B	23-109-35
6384 A7C	23-109-35
6384 A7T	23-109-35
6385 A8B	23-109-35
6385 A8G	23-109-35
6385 A8N	23-109-35
6386 A9B	23-109-35
6386 A9K	23-109-35
6386 A9R	23-109-35
6386 A9T	23-109-35
6386 A9W	23-109-35
6386 A9X	23-109-35
6387 A9B	23-109-35
6387 A9R	23-109-35
6387 A9T	23-109-35
6387 A9W	23-109-35
6390 A5B	23-109-35
6390 A5R	23-109-35
6390 A5T	23-109-35
6392 A5B	23-109-35
6392 A5R	23-109-35
6392 A5T	23-109-35
6393 A4B	23-109-35
6393 A4Q	23-109-35
6393 A4R	23-109-35
6393 A4T	23-109-35
6393 A4X	23-109-35
6394 A4B	23-109-35
6394 A4Q	23-109-35
6394 A4R	23-109-35
6394 A4T	23-109-35
6394 A4X	23-109-35
6395 A4B	23-109-35
6395 A4Q	23-109-35
6395 A4R	23-109-35
6395 A4T	23-109-35
6395 A4Y	23-109-35
6396 A4B	23-109-35
6396 A4Q	23-109-35
6396 A4R	23-109-35
6396 A4T	23-109-35
6396 A4Y	23-109-35
6400 A4B	23-109-36
6400 A4R	23-109-36
6400 A4T	23-109-36
6401 A1B	23-109-36
6401 A1Q	23-109-36
6401 A1R	23-109-36
6401 A1T	23-109-36
6402 A4B	23-109-36
6402 A4R	23-109-36
6402 A4X	23-109-36
6402 A4Y	23-109-36
6403 A4B	23-109-36
6403 A4R	23-109-36
6403 A4X	23-109-36
6403 A4Y	23-109-36
6404 A4B	23-109-36
6404 A4R	23-109-36
6404 A4T	23-109-36
6405 A4B	23-109-36
6405 A4Q	23-109-36
6405 A4R	23-109-36
6405 A4T	23-109-36
6406 A4B	23-109-36
6406 A4Q	23-109-36
6406 A4R	23-109-36
6406 A4T	23-109-36
6407 A4B	23-109-36
6407 A4Q	23-109-36
6407 A4R	23-109-36
6407 A4T	23-109-36
6408 A1B	23-109-36
6408 A1Q	23-109-36
6408 A1R	23-109-36
6408 A1T	23-109-36
6409 A1B	23-109-36
6409 A1R	23-109-36
6409 A1T	23-109-36
6410 A5B	23-109-36
6410 A5Q	23-109-36
6410 A5R	23-109-36
6410 A5X	23-109-36
6410 A5Y	23-109-36
6411 A1B	23-109-36
6411 A1Q	23-109-36
6411 A1R	23-109-36
6411 A1T	23-109-36
6411 A1Y	23-109-36
6412 A1B	23-109-36
6412 A1Q	23-109-36
6412 A1R	23-109-36
6412 A1T	23-109-36
6413 A1B	23-109-36
6413 A1Q	23-109-36
6413 A1R	23-109-36
6413 A1T	23-109-36
6414 A4B	23-109-36
6414 A4Q	23-109-36
6414 A4R	23-109-36
6414 A4T	23-109-36
6415 A4B	23-109-36
6415 A4Q	23-109-36
6415 A4R	23-109-36
6415 A4T	23-109-36
6416 A4B	23-109-36
6416 A4R	23-109-36
6416 A4T	23-109-36
6417 A4B	23-109-36
6417 A4Q	23-109-36
6417 A4R	23-109-36
6417 A4T	23-109-36
6418 A4B	23-109-36
6418 A4R	23-109-36
6418 A4T	23-109-36
6418 A4X	23-109-36
6418 A4Y	23-109-36
6418 A8R	23-109-36
6419 A4B	23-109-36
6419 A4R	23-109-36
6419 A4T	23-109-36
6419 A4X	23-109-36
6419 A4Y	23-109-36
6420 A5B	23-109-36
6420 A5R	23-109-36
6420 A5T	23-109-36
6421 A5B	23-109-36
6421 A5Q	23-109-36
6421 A5R	23-109-36
6421 A5T	23-109-36
6422 A1B	23-109-36
6422 A1R	23-109-36
6422 A1T	23-109-36
6423 A1B	23-109-36
6423 A1Q	23-109-36
6423 A1R	23-109-36
6423 A1T	23-109-36
6424 A5B	23-109-36
6424 A5Q	23-109-36
6424 A5R	23-109-36
6424 A5X	23-109-36
6424 A5Y	23-109-36
6425 A1B	23-109-36
6425 A1Q	23-109-36
6425 A1R	23-109-36
6425 A1T	23-109-36
6425 A1Y	23-109-36
6426 A4B	23-109-36
6426 A4R	23-109-36
6426 A4T	23-109-36
6428 A1B	23-109-36
6428 A1Q	23-109-36
6428 A1R	23-109-36
6428 A1T	23-109-36
6428 A1Y	23-109-36
6429 A4B	23-109-36
6429 A4Q	23-109-36
6429 A4R	23-109-36
6429 A4T	23-109-36
6429 A4Y	23-109-36
6429 A5R	23-109-36
6430 A4B	23-109-36
6430 A4Q	23-109-36
6430 A4R	23-109-36
6430 A4X	23-109-36
6430 A4Y	23-109-36
6430 A5R	23-109-36
6431 A4B	23-109-36
6431 A4Q	23-109-36
6431 A4R	23-109-36
6431 A4X	23-109-36
6431 A4Y	23-109-36
6431 A5R	23-109-36
6432 A4B	23-109-36
6432 A4Q	23-109-36
6432 A4R	23-109-36
6432 A4T	23-109-36
6433 A4B	23-109-36
6433 A4Q	23-109-36
6433 A4R	23-109-36
6433 A4T	23-109-36
6433 A4Y	23-109-36
6433 A5R	23-109-36
6434 A4B	23-109-36
6434 A4Q	23-109-36
6434 A4R	23-109-36
6434 A4X	23-109-36
6434 A4Y	23-109-36
6434 A5R	23-109-36
6435 A4B	23-109-36
6435 A4Q	23-109-36
6435 A4R	23-109-36
6435 A4X	23-109-36
6435 A4Y	23-109-36
6435 A5R	23-109-36
6436 A2T	23-109-36
6437 A8T	23-109-36
6438 A4B	23-109-36
6438 A4Q	23-109-36
6438 A4R	23-109-36
6438 A4U	23-109-36
6438 A4X	23-109-36
6438 A4Y	23-109-36
6439 A1B	23-109-36
6439 A1Q	23-109-36
6439 A1R	23-109-36
6439 A1T	23-109-36
6439 A1Y	23-109-36
6440 A1B	23-109-36
6440 A1Q	23-109-36
6440 A1R	23-109-36
6440 A1T	23-109-36
6441 A4B	23-109-36
6441 A4Q	23-109-36
6441 A4R	23-109-36
6441 A4T	23-109-36
6442 A4B	23-109-36
6442 A4Q	23-109-36
6442 A4R	23-109-36
6442 A4T	23-109-36
6444 A1B	23-109-36
6444 A1Q	23-109-36
6444 A1R	23-109-36
6444 A1T	23-109-36
6444 A1Y	23-109-36
6445 AB4	23-109-36

MyMopar.com

PART NUMBER	CODE	PART NUMBER	CODE	PART NUMBER	CODE	PART NUMBER	CODE	PART NUMBER	CODE
6445 AR5	23-109-36	6464 A1R	23-109-36	6485 A2Q	23-109-36	6500 A4T	23-109-3	6530 A4B	23-109-3
6445 AT6	23-109-36	6464 A1T	23-109-36	6485 A2R	23-109-36	6501 A4B	23-109-3	6530 A4Q	23-109-3
6446 A1B	23-109-36	6466 A8B	23-109-36	6485 A2T	23-109-36	6501 A4R	23-109-3	6530 A4R	23-109-3
6446 A1Q	23-109-36	6466 A8Q	23-109-36	6486 A3R	23-109-36	6501 A4T	23-109-3	6530 A4T	23-109-3
6446 A1R	23-109-36	6466 A8R	23-109-36	6486 A3X	23-109-36	6502 A1B	23-109-3	6531 A4B	23-109-3
6446 A1T	23-109-36	6466 A8T	23-109-36	6487 A4B	23-109-36	6502 A1Q	23-109-3	6531 A4R	23-109-3
6447 A4B	23-109-36	6467 A4B	23-109-36	6487 A4L	23-109-36	6502 A1R	23-109-3	6531 A4T	23-109-3
6447 A4Q	23-109-36	6467 A4L	23-109-36	6487 A4R	23-109-36	6502 A1T	23-109-3	6531 A4X	23-109-3
6447 A4R	23-109-36	6467 A4N	23-109-36	6487 A4T	23-109-36	6503 A4B	23-109-3	6531 A4Y	23-109-3
6447 A4T	23-109-36	6467 A4R	23-109-36	6487 A4W	23-109-36	6503 A4R	23-109-3	6533 A1B	23-109-3
6448 A1B	23-109-36	6468 A4B	23-109-36	6487 A4X	23-109-36	6503 A4X	23-109-3	6533 A1Q	23-109-3
6448 A1Q	23-109-36	6468 A4R	23-109-36	6488 A1B	23-109-36	6503 A4Y	23-109-3	6533 A1R	23-109-3
6448 A1R	23-109-36	6468 A4T	23-109-36	6488 A1Q	23-109-36	6505 A4B	23-109-3	6533 A1T	23-109-3
6448 A1T	23-109-36	6468 A4X	23-109-36	6488 A1R	23-109-36	6505 A4R	23-109-3	6535 A4B	23-109-3
6452 A4B	23-109-36	6469 A8B	23-109-36	6488 A1T	23-109-36	6505 A4T	23-109-3	6535 A4Q	23-109-3
6452 A4Q	23-109-36	6469 A8Q	23-109-36	6488 A1Y	23-109-36	6506 A4B	23-109-3	6535 A4R	23-109-3
6452 A4R	23-109-36	6469 A8R	23-109-36	6491 A7B	23-109-36	6506 A4Q	23-109-3	6535 A4Y	23-109-3
6452 A4T	23-109-36	6469 A8T	23-109-36	6491 A7G	23-109-36	6506 A4R	23-109-3	6536 A4B	23-109-3
6452 A4X	23-109-36	6470 A4B	23-109-36	6491 A7N	23-109-36	6506 A4T	23-109-3	6536 A4R	23-109-3
6452 A4Y	23-109-36	6470 A4L	23-109-36	6491 A7P	23-109-36	6507 A4B	23-109-3	6536 A4T	23-109-3
6453 A4B	23-109-36	6470 A4N	23-109-36	6491 A7Q	23-109-36	6507 A4Q	23-109-3	6536 A4X	23-109-3
6453 A4Q	23-109-36	6470 A4R	23-109-36	6491 A7R	23-109-36	6507 A4R	23-109-3	6536 A4Y	23-109-3
6453 A4R	23-109-36	6470 A9X	23-109-36	6491 A7T	23-109-36	6507 A4T	23-109-3	6537 A5B	23-109-3
6453 A4T	23-109-36	6471 A4B	23-109-36	6492 A3B	23-109-36	6510 A1B	23-109-3	6537 A5R	23-109-3
6453 A4X	23-109-36	6471 A4L	23-109-36	6492 A3K	23-109-36	6510 A1Q	23-109-3	6537 A5T	23-109-3
6453 A4Y	23-109-36	6471 A4R	23-109-36	6492 A3R	23-109-36	6510 A1R	23-109-3	6540 A5B	23-109-3
6456 A4B	23-109-36	6471 A4T	23-109-36	6492 A3T	23-109-36	6510 A1T	23-109-3	6540 A5Q	23-109-3
6456 A4Q	23-109-36	6471 A4X	23-109-36	6492 A3X	23-109-36	6511 A4B	23-109-3	6540 A5R	23-109-3
6456 A4R	23-109-36	6472 A1N	23-109-36	6492 A3W	23-109-36	6511 A4R	23-109-3	6540 A5X	23-109-3
6456 A4T	23-109-36	6473 A4B	23-109-36	6493 A7A	23-109-36	6511 A4X	23-109-3	6540 A5Y	23-109-3
6456 A4X	23-109-36	6473 A4R	23-109-36	6493 A7B	23-109-36	6511 A4Y	23-109-3	6541 A1B	23-109-3
6457 A4B	23-109-36	6473 A4T	23-109-36	6493 A7G	23-109-36	6512 A4B	23-109-3	6541 A1Q	23-109-3
6457 A4Q	23-109-36	6473 A4W	23-109-36	6493 A7T	23-109-36	6512 A4Q	23-109-3	6541 A1R	23-109-3
6457 A4R	23-109-36	6473 A4X	23-109-36	6494 A8B	23-109-36	6512 A4R	23-109-3	6541 A1T	23-109-3
6457 A4U	23-109-36	6474 A4B	23-109-36	6494 A8G	23-109-36	6512 A4T	23-109-3	6541 A1Y	23-109-3
6457 A4X	23-109-36	6474 A4L	23-109-36	6494 A8N	23-109-36	6514 A4B	23-109-3	6542 A1B	23-109-3
6457 A4Y	23-109-36	6474 A4R	23-109-36	6495 A9B	23-109-36	6514 A5X	23-109-3	6542 A1R	23-109-3
6458 A1B	23-109-36	6474 A4T	23-109-36	6495 A9K	23-109-36	6514 V5R	23-109-3	6542 A1T	23-109-3
6458 A1Q	23-109-36	6474 A4W	23-109-36	6495 A9R	23-109-36	6514 V5Y	23-109-3	6543 A1B	23-109-3
6459 A4R	23-109-36	6474 A4X	23-109-36	6495 A9T	23-109-36	6524 A4B	23-109-3	6543 A1R	23-109-3
6459 A4T	23-109-36	6475 A3R	23-109-36	6495 A9W	23-109-36	6524 A4Q	23-109-3	6543 A1T	23-109-3
6459 A4U	23-109-36	6475 A3X	23-109-36	6495 A9X	23-109-36	6524 A4R	23-109-3	6545 AX8	23-79-33
6459 A4W	23-109-36	6478 A1B	23-109-36	6496 A9B	23-109-36	6524 A4U	23-109-3	6545 VB8	23-79-33
6459 A4X	23-109-36	6478 A1L	23-109-36	6496 A9K	23-109-36	6524 A4X	23-109-3	6545 VR6	23-79-33
6460 A4B	23-109-36	6478 A1N	23-109-36	6496 A9R	23-109-36	6524 A4Y	23-109-3	6545 VX8	23-79-33
6460 A4Q	23-109-36	6478 A1Q	23-109-36	6496 A9T	23-109-36	6525 A1B	23-109-3	6545 VY8	23-79-33
6460 A4R	23-109-36	6478 A1R	23-109-36	6496 A9W	23-109-36	6525 A1Q	23-109-3	6548 A1B	23-109-3
6460 A4T	23-109-36	6478 A1T	23-109-36	6496 A9X	23-109-36	6525 A1R	23-109-3	6548 A1R	23-109-3
6460 A4X	23-109-36	6481 A4B	23-109-36	6498 A5B	23-109-36	6525 A1T	23-109-3	6548 A1T	23-109-3
6462 A4B	23-109-36	6481 A4L	23-109-36	6498 A5Q	23-109-36	6526 A1B	23-109-3	6549 A1B	23-109-3
6462 A4Q	23-109-36	6481 A4R	23-109-36	6498 A5R	23-109-36	6526 A1Q	23-109-3	6549 A1R	23-109-3
6462 A4R	23-109-36	6481 A4X	23-109-36	6498 A5X	23-109-36	6526 A1R	23-109-3	6549 A1T	23-109-3
6462 A4T	23-109-36	6482 A1N	23-109-36	6498 A5Y	23-109-36	6526 A1T	23-109-3	6553 A5B	23-109-3
6462 A4Y	23-109-36	6483 A4B	23-109-36	6499 A2B	23-109-36	6528 A4B	23-109-3	6553 A5Q	23-109-3
6463 A5B	23-109-36	6483 A4R	23-109-36	6499 A2Q	23-109-36	6528 A4Q	23-109-3	6553 A5R	23-109-3
6463 A5R	23-109-36	6483 A4T	23-109-36	6499 A2R	23-109-36	6528 A4R	23-109-3	6553 A5X	23-109-3
6463 A5T	23-109-36	6483 A4X	23-109-36	6499 A2T	23-109-36	6528 A4T	23-109-3	6553 A5Y	23-109-3
6464 A1B	23-109-36	6485 A2B	23-109-36	6499 A2Y	23-109-36	6529 A4B	23-109-3	6554 A1B	23-109-3
6464 A1N	23-109-36	6485 A2L	23-109-36	6500 A4B	23-109-3	6529 A4R	23-109-3	6554 A1Q	23-109-3
6464 A1Q	23-109-36	6485 A2N	23-109-36	6500 A4R	23-109-3	6529 A4T	23-109-3	6554 A1R	23-109-3

MyMopar.com

PART NUMBER	CODE	PART NUMBER	CODE	PART NUMBER	CODE	PART NUMBER	CODE	PART NUMBER	CODE
6554 A1T	23-109-3	6575 A4T	23-109-3	6594 A5T	23-109-3	6635 A4T	23-109-3	6674 A2R	23-109-3
6554 A1Y	23-109-3	6575 A4Y	23-109-3	6595 A1B	23-109-3	6635 A4W	23-109-3	6674 A2T	23-109-3
6555 A1B	23-109-3	6576 A4B	23-109-3	6595 A1Q	23-109-3	6635 A4X	23-109-3	6675 A8B	23-109-3
6555 A1Q	23-109-3	6576 A4R	23-109-3	6595 A1R	23-109-3	6642 A1B	23-109-3	6675 A8Q	23-109-3
6555 A1R	23-109-3	6576 A4T	23-109-3	6595 A1T	23-109-3	6642 A1N	23-109-3	6675 A8R	23-109-3
6555 A1T	23-109-3	6577 A4B	23-109-3	6596 A4B	23-109-3	6642 A1Q	23-109-3	6675 A8T	23-109-3
6555 A1Y	23-109-3	6577 A4Q	23-109-3	6596 A4Q	23-109-3	6642 A1R	23-109-3	6676 A4B	23-109-3
6556 A4B	23-109-3	6577 A4R	23-109-3	6596 A4R	23-109-3	6642 A1T	23-109-3	6676 A4L	23-109-3
6556 A4R	23-109-3	6577 A4T	23-109-3	6596 A4T	23-109-3	6644 A8B	23-109-3	6676 A4N	23-109-3
6556 A4T	23-109-3	6578 A4B	23-109-3	6597 A1B	23-109-3	6644 A8Q	23-109-3	6676 A4R	23-109-3
6558 A4B	23-109-3	6578 A4Q	23-109-3	6597 A1Q	23-109-3	6644 A8R	23-109-3	6679 A7B	23-109-3
6558 A4Q	23-109-3	6578 A4R	23-109-3	6597 A1R	23-109-3	6644 A8T	23-109-3	6679 A7G	23-109-3
6558 A4R	23-109-3	6578 A4T	23-109-3	6597 A1T	23-109-3	6645 A4B	23-109-3	6679 A7N	23-109-3
6558 A4T	23-109-3	6578 A4Y	23-109-3	6598 A5B	23-109-3	6645 A4L	23-109-3	6679 A7P	23-109-3
6558 A4Y	23-109-3	6582 A4B	23-109-3	6598 A5R	23-109-3	6645 A4N	23-109-3	6679 A7Q	23-109-3
6558 A5R	23-109-3	6582 A4Q	23-109-3	6598 A5T	23-109-3	6645 A4R	23-109-3	6679 A7R	23-109-3
6559 A4B	23-109-3	6582 A4R	23-109-3	6599 A4B	23-109-3	6646 A4B	23-109-3	6679 A7T	23-109-3
6559 A4Q	23-109-3	6582 A4T	23-109-3	6599 A4Q	23-109-3	6646 A4L	23-109-3	6683 A3B	23-109-3
6559 A4R	23-109-3	6582 A4X	23-109-3	6599 A4R	23-109-3	6646 A4N	23-109-3	6683 A3C	23-109-3
6559 A4X	23-109-3	6583 A4B	23-109-3	6599 A4T	23-109-3	6646 A4R	23-109-3	6683 A3K	23-109-3
6559 A4Y	23-109-3	6583 A4Q	23-109-3	6599 A4X	23-109-3	6646 A4T	23-109-3	6683 A3R	23-109-3
6559 A5R	23-109-3	6583 A4R	23-109-3	6599 A4Y	23-109-3	6646 A4X	23-109-3	6683 A3T	23-109-3
6562 A4B	23-109-3	6583 A4T	23-109-3	6604 A4B	23-109-3	6648 A4B	23-109-3	6683 A3V	23-109-3
6562 A4Q	23-109-3	6583 A4Y	23-109-3	6604 A4Q	23-109-3	6648 A4L	23-109-3	6683 A3W	23-109-3
6562 A4R	23-109-3	6586 A1B	23-109-3	6604 A4R	23-109-3	6648 A4R	23-109-3	6684 A7A	23-109-3
6562 A4T	23-109-3	6586 A1Q	23-109-3	6604 A4T	23-109-3	6648 A4T	23-109-3	6684 A7B	23-109-3
6562 A4Y	23-109-3	6586 A1R	23-109-3	6604 A4X	23-109-3	6648 A4X	23-109-3	6684 A7G	23-109-3
6562 A5R	23-109-3	6586 A1T	23-109-3	6604 A4Y	23-109-3	6649 A1N	23-109-3	6684 A7T	23-109-3
6564 A4B	23-109-3	6587 A1B	23-109-3	6607 A1B	23-109-3	6651 A4B	23-109-3	6687 AB4	23-109-5
6564 A4Q	23-109-3	6587 A1Q	23-109-3	6607 A1Q	23-109-3	6651 A4R	23-109-3	6687 AL3	23-109-5
6564 A4R	23-109-3	6587 A1R	23-109-3	6607 A1R	23-109-3	6651 A4T	23-109-3	6687 AM9	23-109-5
6564 A4X	23-109-3	6587 A1T	23-109-3	6607 A1T	23-109-3	6651 A4W	23-109-3	6687 AR5	23-109-5
6564 A4Y	23-109-3	6588 A1B	23-109-3	6607 A1Y	23-109-3	6651 A4X	23-109-3	6687 AW3	23-109-5
6565 A4B	23-109-3	6588 A1Q	23-109-3	6608 A4B	23-109-3	6655 A4B	23-109-3	6687 AX9	23-109-5
6565 A4Q	23-109-3	6588 A1R	23-109-3	6608 A4Q	23-109-3	6655 A4L	23-109-3	6688 A8B	23-109-3
6565 A4R	23-109-3	6588 A1T	23-109-3	6608 A4R	23-109-3	6655 A4R	23-109-3	6688 A8G	23-109-3
6565 A4X	23-109-3	6588 A1Y	23-109-3	6608 A4U	23-109-3	6655 A4T	23-109-3	6688 A8N	23-109-3
6565 A4Y	23-109-3	6589 A1B	23-109-3	6608 A4X	23-109-3	6655 A4W	23-109-3	6689 A9B	23-109-3
6566 A2T	23-109-3	6589 A1Q	23-109-3	6608 A4Y	23-109-3	6655 A4X	23-109-3	6689 A9C	23-109-3
6567 A2T	23-109-3	6589 A1R	23-109-3	6621 A4B	23-109-3	6660 A1B	23-109-3	6689 A9K	23-109-3
6568 A8T	23-109-3	6589 A1T	23-109-3	6621 A4Q	23-109-3	6660 A1L	23-109-3	6689 A9R	23-109-3
6569 A8T	23-109-3	6589 A1Y	23-109-3	6621 A4R	23-109-3	6660 A1N	23-109-3	6689 A9T	23-109-3
6570 A4B	23-109-3	6590 A1B	23-109-3	6621 A4T	23-109-3	6660 A1Q	23-109-3	6689 A9V	23-109-3
6570 A4Q	23-109-3	6590 A1Q	23-109-3	6621 A4X	23-109-3	6660 A1R	23-109-3	6689 A9W	23-109-3
6570 A4R	23-109-3	6590 A1R	23-109-3	6622 A4B	23-109-3	6665 A4B	23-109-3	6689 A9X	23-109-3
6570 A4X	23-109-3	6590 A1T	23-109-3	6622 A4Q	23-109-3	6665 A4L	23-109-3	6692 A9B	23-109-3
6570 A4Y	23-109-3	6590 A1Y	23-109-3	6622 A4R	23-109-3	6665 A4R	23-109-3	6692 A9C	23-109-3
6573 A2B	23-109-3	6591 A4B	23-109-3	6622 A4T	23-109-3	6665 A4X	23-109-3	6692 A9K	23-109-3
6573 A2Q	23-109-3	6591 A4Q	23-109-3	6622 A4X	23-109-3	6667 A1N	23-109-3	6692 A9R	23-109-3
6573 A2R	23-109-3	6591 A4R	23-109-3	6624 A4B	23-109-3	6668 A4B	23-109-3	6692 A9T	23-109-3
6573 A2T	23-109-3	6591 A4T	23-109-3	6624 A4R	23-109-3	6668 A4R	23-109-3	6692 A9V	23-109-3
6573 A2Y	23-109-3	6592 A4B	23-109-3	6624 A4T	23-109-3	6668 A4T	23-109-3	6692 A9W	23-109-3
6574 A5B	23-109-3	6592 A4Q	23-109-3	6630 A4B	23-109-3	6669 A3R	23-109-3	6692 A9X	23-109-3
6574 A5Q	23-109-3	6592 A4R	23-109-3	6630 A4Q	23-109-3	6669 A3X	23-109-3	6697 A1B	23-109-3
6574 A5R	23-109-3	6592 A4T	23-109-3	6630 A4R	23-109-3	6673 A3R	23-109-3	6697 A1Q	23-109-3
6574 A5X	23-109-3	6593 A5B	23-109-3	6630 A4T	23-109-3	6673 A3X	23-109-3	6698 A4R	23-109-3
6574 A5Y	23-109-3	6593 A5R	23-109-3	6630 A4Y	23-109-3	6674 A2B	23-109-3	6698 A4T	23-109-3
6575 A4B	23-109-3	6593 A5T	23-109-3	6635 A4B	23-109-3	6674 A2L	23-109-3	6698 A4U	23-109-3
6575 A4Q	23-109-3	6594 A5B	23-109-3	6635 A4L	23-109-3	6674 A2N	23-109-3	6698 A4X	23-109-3
6575 A4R	23-109-3	6594 A5R	23-109-3	6635 A4R	23-109-3	6674 A2Q	23-109-3	6700 A4B	23-109-4

MyMopar.com

PART NUMBER	CODE
6700 A4R	23-109-4
6700 A4T	23-109-4
6701 A1B	23-109-4
6701 A1Q	23-109-4
6701 A1R	23-109-4
6701 A1T	23-109-4
6702 A4B	23-109-4
6702 A4R	23-109-4
6702 A4X	23-109-4
6702 A4Y	23-109-4
6704 A4B	23-109-4
6704 A4R	23-109-4
6704 A4T	23-109-4
6705 A4B	23-109-4
6705 A4Q	23-109-4
6705 A4R	23-109-4
6705 A4T	23-109-4
6706 A4B	23-109-4
6706 A4Q	23-109-4
6706 A4R	23-109-4
6706 A4T	23-109-4
6708 A1B	23-109-4
6708 A1Q	23-109-4
6708 A1R	23-109-4
6708 A1T	23-109-4
6709 A4B	23-109-4
6709 A4R	23-109-4
6709 A4X	23-109-4
6709 A4Y	23-109-4
6710 A4B	23-109-4
6710 A4Q	23-109-4
6710 A4R	23-109-4
6710 A4T	23-109-4
6711 A5B	23-109-4
6711 A5Q	23-109-4
6711 A5R	23-109-4
6711 A5X	23-109-4
6711 A5Y	23-109-4
6712 A1B	23-109-4
6712 A1Q	23-109-4
6712 A1R	23-109-4
6712 A1T	23-109-4
6712 A1Y	23-109-4
6713 A1B	23-109-4
6713 A1R	23-109-4
6713 A1T	23-109-4
6714 A5B	23-109-4
6714 A5R	23-109-4
6714 A5T	23-109-4
6715 A4B	23-109-4
6715 V5R	23-109-4
6715 V5X	23-109-4
6715 V5Y	23-109-4
6721 A4B	23-109-4
6721 A4Q	23-109-4
6721 A4R	23-109-4
6721 A4U	23-109-4
6721 A4X	23-109-4
6721 A4Y	23-109-4
6726 A1B	23-109-4
6726 A1Q	23-109-4
6726 A1R	23-109-4
6726 A1T	23-109-4
6727 A1B	23-109-4
6727 A1Q	23-109-4
6727 A1R	23-109-4
6727 A1T	23-109-4
6729 A4B	23-109-4
6729 A4Q	23-109-4
6729 A4R	23-109-4
6729 A4T	23-109-4
6730 A4B	23-109-4
6730 A4R	23-109-4
6730 A4T	23-109-4
6731 A4B	23-109-4
6731 A4Q	23-109-4
6731 A4R	23-109-4
6731 A4T	23-109-4
6732 A4B	23-109-4
6732 A4R	23-109-4
6732 A4T	23-109-4
6732 A4X	23-109-4
6732 A4Y	23-109-4
6732 A8R	23-109-4
6734 A4B	23-109-4
6734 A4Q	23-109-4
6734 A4R	23-109-4
6734 A4T	23-109-4
6735 A4B	23-109-4
6735 A4R	23-109-4
6735 A4T	23-109-4
6735 A4X	23-109-4
6735 A4Y	23-109-4
6736 A5B	23-109-4
6736 A5R	23-109-4
6736 A5T	23-109-4
6737 A4B	23-109-4
6737 A4Q	23-109-4
6737 A4R	23-109-4
6737 A4U	23-109-4
6737 A4X	23-109-4
6737 A4Y	23-109-4
6750 A1B	23-109-4
6750 A1R	23-109-4
6750 A1T	23-109-4
6751 A1B	23-109-4
6751 A1Q	23-109-4
6751 A1R	23-109-4
6751 A1T	23-109-4
6753 A1B	23-109-4
6753 A1Q	23-109-4
6753 A1R	23-109-4
6753 A1T	23-109-4
6753 A1Y	23-109-4
6754 A1B	23-109-4
6754 A1Q	23-109-4
6754 A1R	23-109-4
6754 A1T	23-109-4
6754 A1Y	23-109-4
6755 A4B	23-109-4
6755 A4R	23-109-4
6755 A4T	23-109-4
6757 A4B	23-109-4
6757 A4Q	23-109-4
6757 A4R	23-109-4
6757 A4T	23-109-4
6757 A4Y	23-109-4
6757 A5R	23-109-4
6758 A4B	23-109-4
6758 A4Q	23-109-4
6758 A4R	23-109-4
6758 A4X	23-109-4
6758 A4Y	23-109-4
6758 A5R	23-109-4
6759 A4B	23-109-4
6759 A4Q	23-109-4
6759 A4R	23-109-4
6759 A4X	23-109-4
6759 A4Y	23-109-4
6759 A5R	23-109-4
6761 A4B	23-109-4
6761 A4Q	23-109-4
6761 A4R	23-109-4
6761 A4T	23-109-4
6761 A4Y	23-109-4
6761 A5R	23-109-4
6762 A4B	23-109-4
6762 A4Q	23-109-4
6762 A4R	23-109-4
6762 A4X	23-109-4
6762 A4Y	23-109-4
6763 A4B	23-109-4
6763 A4Q	23-109-4
6763 A4X	23-109-4
6763 A4Y	23-109-4
6764 A2T	23-109-4
6765 A8T	23-109-4
6768 A2B	23-109-4
6768 A2Q	23-109-4
6768 A2R	23-109-4
6768 A2T	23-109-4
6768 A2Y	23-109-4
6769 A5B	23-109-4
6769 A5Q	23-109-4
6769 A5R	23-109-4
6769 A5X	23-109-4
6769 A5Y	23-109-4
6770 A4B	23-109-4
6770 A4Q	23-109-4
6770 A4R	23-109-4
6770 A4T	23-109-4
6770 A4Y	23-109-4
6771 A4B	23-109-4
6771 A4R	23-109-4
6771 A4T	23-109-4
6772 A4B	23-109-4
6772 A4R	23-109-4
6772 A4T	23-109-4
6773 A4B	23-109-4
6773 A4Q	23-109-4
6773 A4R	23-109-4
6773 A4T	23-109-4
6773 A4Y	23-109-4
6774 A5B	23-109-4
6774 A5Q	23-109-4
6774 A5R	23-109-4
6774 A5X	23-109-4
6774 A5Y	23-109-4
6781 A1B	23-109-4
6781 A1Q	23-109-4
6781 A1R	23-109-4
6781 A1T	23-109-4
6782 A1B	23-109-4
6782 A1Q	23-109-4
6782 A1R	23-109-4
6782 A1T	23-109-4
6782 A1Y	23-109-4
6783 A1B	23-109-4
6783 A1Q	23-109-4
6783 A1R	23-109-4
6783 A1T	23-109-4
6783 A1Y	23-109-4
6784 A4B	23-109-4
6784 A4Q	23-109-4
6784 A4R	23-109-4
6784 A4T	23-109-4
6785 A4B	23-109-4
6785 A4Q	23-109-4
6785 A4R	23-109-4
6785 A4T	23-109-4
6786 A5B	23-109-4
6786 A5R	23-109-4
6786 A5T	23-109-4
6787 A1B	23-109-4
6787 A1Q	23-109-4
6787 A1R	23-109-4
6787 A1T	23-109-4
6788 A4B	23-109-4
6788 A4Q	23-109-4
6788 A4R	23-109-4
6788 A4T	23-109-4
6789 A1B	23-109-4
6789 A1Q	23-109-4
6789 A1T	23-109-4
6790 AB4	23-109-4
6790 AR5	23-109-4
6790 AT6	23-109-4
6793 A4B	23-109-4
6793 A4Q	23-109-4
6793 A4R	23-109-4
6793 A4T	23-109-4
6793 A4X	23-109-4
6793 A4Y	23-109-4
6794 A4B	23-109-4
6794 A4Q	23-109-4
6794 A4R	23-109-4
6794 A4T	23-109-4
6794 A4X	23-109-4
6794 A4Y	23-109-4
6798 A1B	23-109-4
6798 A1Q	23-109-4
6798 A1R	23-109-4
6798 A1T	23-109-4
6798 A1Y	23-109-4
6810 A4B	23-109-4
6810 A4Q	23-109-4
6810 A4R	23-109-4
6810 A4T	23-109-4
6810 A4X	23-109-4
6811 A4B	23-109-4
6811 A4Q	23-109-4
6811 A4R	23-109-4
6811 A4T	23-109-4
6811 A4X	23-109-4
6816 A4B	23-109-4
6816 A4Q	23-109-4
6816 A4R	23-109-4
6816 A4T	23-109-4
6816 A4Y	23-109-4
6817 A1B	23-109-4
6817 A1Q	23-109-4
6818 A4R	23-109-4
6818 A4T	23-109-4
6818 A4U	23-109-4
6818 A4W	23-109-4
6818 A4X	23-109-4
6834 A1B	23-109-4
6834 A1N	23-109-4
6834 A1Q	23-109-4
6834 A1R	23-109-4
6834 A1T	23-109-4
6835 A8B	23-109-4
6835 A8Q	23-109-4
6835 A8R	23-109-4
6835 A8T	23-109-4
6836 A4B	23-109-4
6836 A4L	23-109-4
6836 A4N	23-109-4
6836 A4R	23-109-4
6837 A4B	23-109-4
6837 A4R	23-109-4
6837 A4T	23-109-4
6837 A4X	23-109-4
6838 A4B	23-109-4
6838 A4L	23-109-4
6838 A4R	23-109-4
6838 A4T	23-109-4
6838 A4X	23-109-4
6839 A1N	23-109-4
6840 A4B	23-109-4
6840 A4R	23-109-4
6840 A4T	23-109-4
6840 A4W	23-109-4
6840 A4X	23-109-4
6841 A4B	23-109-4
6841 A4R	23-109-4
6841 A4T	23-109-4
6841 A4W	23-109-4
6841 A4X	23-109-4

MyMopar.com

PART NUMBER	CODE
6844 A1B	23-109-4
6844 A1L	23-109-4
6844 A1N	23-109-4
6844 A1Q	23-109-4
6844 A1R	23-109-4
6844 A1T	23-109-4
6848 A4B	23-109-4
6848 A4L	23-109-4
6848 A4R	23-109-4
6848 A4X	23-109-4
6849 A1N	23-109-4
6850 A4B	23-109-4
6850 A4R	23-109-4
6850 A4T	23-109-4
6850 A4X	23-109-4
6851 A3R	23-109-4
6851 A3X	23-109-4
6852 A3R	23-109-4
6852 A3X	23-109-4
6853 A2B	23-109-4
6853 A2L	23-109-4
6853 A2N	23-109-4
6853 A2Q	23-109-4
6853 A2R	23-109-4
6853 A2T	23-109-4
6854 A8B	23-109-4
6854 A8Q	23-109-4
6854 A8R	23-109-4
6854 A8T	23-109-4
6855 A4B	23-109-4
6855 A4L	23-109-4
6855 A4N	23-109-4
6855 A4R	23-109-4
6855 A9X	23-109-4
6856 A4B	23-109-4
6856 A4L	23-109-4
6856 A4R	23-109-4
6856 A4T	23-109-4
6856 A4W	23-109-4
6856 A4X	23-109-4
6866 A7B	23-109-4
6866 A7G	23-109-4
6866 A7N	23-109-4
6866 A7P	23-109-4
6866 A7Q	23-109-4
6866 A7R	23-109-4
6866 A7T	23-109-4
6870 A3B	23-109-4
6870 A3K	23-109-4
6870 A3R	23-109-4
6870 A3T	23-109-4
6870 A3V	23-109-4
6870 A3W	23-109-4
6870 A3X	23-109-4
6872 A7A	23-109-4
6872 A7B	23-109-4
6872 A7G	23-109-4
6872 A7T	23-109-4
6874 A8B	23-109-4
6874 A8G	23-109-4
6874 A8N	23-109-4
6875 A8B	23-109-4
6875 A8G	23-109-4
6875 A8N	23-109-4
6876 A9B	23-109-4
6876 A9K	23-109-4
6876 A9R	23-109-4
6876 A9T	23-109-4
6876 A9W	23-109-4
6876 A9X	23-109-4
6877 A9B	23-109-4
6877 A9K	23-109-4
6877 A9R	23-109-4
6877 A9T	23-109-4
6877 A9W	23-109-4
6877 A9X	23-109-4
6878 A9B	23-109-4
6878 A9K	23-109-4
6878 A9R	23-109-4
6878 A9T	23-109-4
6878 A9W	23-109-4
6878 A9X	23-109-4
6879 A9B	23-109-4
6879 A9K	23-109-4
6879 A9R	23-109-4
6879 A9T	23-109-4
6879 A9W	23-109-4
6879 A9X	23-109-4
6917 AQ8	23-71-1
6917 AR7	23-71-1
6917 AT8	23-71-1
6917 AY3	23-71-1
6920 AQ8	23-71-1
6920 AR7	23-71-1
6920 AT8	23-71-1
6920 AY3	23-71-1
6925 AB8	23-71-1
6925 AQ8	23-71-1
6925 AR7	23-71-1
6925 AT8	23-71-1
6925 AX8	23-71-1
6925 AY3	23-71-1
6926 A4B	23-71-1
6926 A4Q	23-71-1
6926 A4R	23-71-1
6926 A4T	23-71-1
6926 A4X	23-71-1
6926 A4Y	23-71-1
6927 A4B	23-76-34
6927 A4Q	23-76-34
6927 A4R	23-76-34
6927 A4T	23-76-34
6927 A4X	23-76-34
6927 A4Y	23-76-34
6936 AR7	23-76-18
6936 AX9	23-76-18
6937 AR7	23-76-34
6937 AX9	23-76-34
6938 AR7	23-108-4
6938 AX9	23-108-4
6939 AR7	23-108-5
6945 AB4	23-76-18
6945 AB8	23-76-18
6945 AR7	23-76-18
6945 AT6	23-76-18
6945 AW3	23-76-18
6945 AX9	23-76-18
6945 AY3	23-76-18
6946 AB4	23-76-34
6946 AB8	23-76-34
6946 AR7	23-76-34
6946 AT6	23-76-34
6946 AW3	23-76-34
6946 AX9	23-76-34
6946 AY3	23-76-34
6947 AB4	23-108-4
6947 AB8	23-108-4
6947 AR7	23-108-4
6947 AT6	23-108-4
6947 AW3	23-108-4
6947 AX9	23-108-4
6947 AY3	23-108-4
6948 AB4	23-108-5
6948 AB8	23-108-5
6948 AR7	23-108-5
6948 AT6	23-108-5
6948 AW3	23-108-5
6948 AX9	23-108-5
6948 AY3	23-108-5
6949 A1B	23-76-18
6949 A1L	23-76-18
6949 A1Q	23-76-18
6949 A1R	23-76-18
6949 A1T	23-76-18
6950 A1B	23-76-34
6950 A1L	23-76-34
6950 A1N	23-76-34
6950 A1Q	23-76-34
6950 A1R	23-76-34
6950 A1T	23-76-34
6951 A1B	23-76-19
6951 A1L	23-76-19
6951 A1N	23-76-19
6951 A1Q	23-76-19
6951 A1R	23-76-19
6951 A1T	23-76-19
6952 A1B	23-76-40
6952 A1L	23-76-40
6952 A1N	23-76-40
6952 A1Q	23-76-40
6952 A1R	23-76-40
6952 A1T	23-76-40
6953 A1B	23-76-45
6953 A1L	23-76-45
6953 A1N	23-76-45
6953 A1Q	23-76-45
6953 A1R	23-76-45
6953 A1T	23-76-45
6954 A1B	23-76-53
6954 A1L	23-76-53
6954 A1N	23-76-53
6954 A1Q	23-76-53
6954 A1R	23-76-53
6954 A1T	23-76-53
6970 A4R	23-109-3
6970 A5R	23-109-3
6970 AA3	23-76-53
6970 AB4	23-76-53
6970 AL3	23-76-53
6970 AQ4	23-76-53
6970 AR5	23-76-53
6970 AX8	23-76-53
6971 A7B	23-76-45
6971 A7G	23-76-45
6971 A7N	23-76-45
6971 A7P	23-76-45
6971 A7Q	23-76-45
6971 A7R	23-76-45
6971 A7T	23-76-45
6972 A7B	23-76-40
6972 A7G	23-76-40
6972 A7N	23-76-40
6972 A7P	23-76-40
6972 A7Q	23-76-40
6972 A7R	23-76-40
6973 A7T	23-76-40
6975 A7B	23-76-34
6975 A7G	23-76-34
6975 A7N	23-76-34
6975 A7P	23-76-34
6975 A7Q	23-76-34
6975 A7R	23-76-34
6975 A7T	23-76-34
6976 A7B	23-76-18
6976 A7G	23-76-18
6976 A7N	23-76-18
6976 A7P	23-76-18
6976 A7Q	23-76-18
6976 A7R	23-76-18
6976 A7T	23-76-18
6977 A3B	23-76-34
6977 A3C	23-76-34
6977 A3K	23-76-34
6977 A3R	23-76-34
6977 A3T	23-76-34
6977 A3W	23-76-34
6977 A3X	23-76-34
6978 A3B	23-76-18
6978 A3C	23-76-18
6978 A3K	23-76-18
6978 A3R	23-76-18
6978 A3T	23-76-18
6978 A3V	23-76-18
6978 A3W	23-76-18
6978 A3X	23-76-18
6979 A7A	23-76-34
6979 A7B	23-76-34
6979 A7G	23-76-34
6979 A7T	23-76-34
6980 A7A	23-76-18
6980 A7B	23-76-18
6980 A7G	23-76-18
6980 A7T	23-76-18
6981 A7A	23-76-45
6981 A7B	23-76-45
6981 A7G	23-76-45
6981 A7T	23-76-45
6982 A3B	23-76-45
6982 A3C	23-76-45
6982 A3K	23-76-45
6982 A3R	23-76-45
6982 A3T	23-76-45
6982 A3V	23-76-45
6982 A3W	23-76-45
6982 A3X	23-76-45
6983 A7A	23-76-40
6983 A7B	23-76-40
6983 A7G	23-76-40
6983 A7T	23-76-40
6984 A3B	23-76-40
6984 A3C	23-76-40
6984 A3K	23-76-40
6984 A3R	23-76-40
6984 A3T	23-76-40
6984 A3V	23-76-40
6984 A3W	23-76-40
6984 A3X	23-76-40
6986 AB4	23-76-45
6986 AF9	23-76-45
6986 AL3	23-76-45
6986 AM9	23-76-45
6986 AR5	23-76-45
6986 AW3	23-76-45
6986 AX9	23-76-45
6987 AB4	23-76-40
6987 AF9	23-76-40
6987 AL3	23-76-40
6987 AM9	23-76-40
6987 AR5	23-76-40
6987 AW3	23-76-40
6987 AX9	23-76-40
6989 AB4	23-76-40
6989 AL3	23-76-40
6989 AM9	23-76-40
6989 AR5	23-76-40
6989 AW3	23-76-40
6989 AX9	23-76-40
6990 AB4	23-76-34
6990 AF9	23-76-34
6990 AL3	23-76-34
6990 AM9	23-76-34
6990 AR5	23-76-34
6990 AW3	23-76-34
6990 AX9	23-76-34
6991 AB4	23-76-18
6991 AF9	23-76-18

MyMopar.com

PART NUMBER	CODE
6991 AL3	23-76-18
6991 AM9	23-76-18
6991 AR5	23-76-18
6991 AW3	23-76-18
6991 AX9	23-76-18
6993 AB4	23-76-53
6993 AL3	23-76-53
6993 AM9	23-76-53
6993 AR5	23-76-53
6993 AW3	23-76-53
6993 AX9	23-76-53
6998 AB4	23-76-53
6998 AF9	23-76-53
6998 AL3	23-76-53
6998 AM9	23-76-53
6998 AR5	23-76-53
6998 AW3	23-76-53
6998 AX9	23-76-53
7003 A4B	23-109-36
7003 A4Q	23-109-36
7003 A4R	23-109-36
7003 A4T	23-109-36
7003 A4X	23-109-36
7016 A4B	23-109-35
7016 A4Q	23-109-35
7016 A4R	23-109-35
7016 A4T	23-109-35
7016 A4Y	23-109-35
7017 A4B	23-109-36
7017 A4Q	23-109-36
7017 A4R	23-109-36
7017 A4T	23-109-36
7017 A4Y	23-109-36
7018 A4B	23-109-3
7018 A4Q	23-109-3
7018 A4R	23-109-3
7018 A4T	23-109-3
7018 A4Y	23-109-3
7018 A5R	23-109-3
7019 A4B	23-109-4
7019 A4Q	23-109-4
7019 A4R	23-109-4
7019 A4T	23-109-4
7019 A4Y	23-109-4
7024 A4B	23-109-35
7024 A4Q	23-109-35
7024 A4R	23-109-35
7024 A4T	23-109-35
7024 A4Y	23-109-35
7025 A4B	23-109-36
7025 A4Q	23-109-36
7025 A4R	23-109-36
7025 A4T	23-109-36
7025 A4Y	23-109-36
7026 A4B	23-109-35
7026 A4Q	23-109-35
7026 A4R	23-109-35
7026 A4T	23-109-35
7026 A4Y	23-109-35
7027 A4B	23-109-36
7027 A4Q	23-109-36
7027 A4R	23-109-36
7027 A4T	23-109-36
7027 A4Y	23-109-36
7028 A4B	23-109-3
7028 A4Q	23-109-3
7028 A4R	23-109-3
7028 A4T	23-109-3
7028 A4Y	23-109-3
7029 A4B	23-109-4
7029 A4Q	23-109-4
7029 A4R	23-109-4
7029 A4T	23-109-4
7029 A4Y	23-109-4
7030 A4B	23-109-35
7030 A4Q	23-109-35
7030 A4R	23-109-35
7030 A4T	23-109-35
7031 A4B	23-109-36
7031 A4Q	23-109-36
7031 A4R	23-109-36
7031 A4T	23-109-36
7032 A4B	23-109-36
7032 A4R	23-109-36
7032 A4T	23-109-36
7033 A4B	23-109-36
7033 A4Q	23-109-36
7033 A4R	23-109-36
7033 A4T	23-109-36
7033 A4Y	23-109-36
7034 A4B	23-109-36
7034 A4Q	23-109-36
7034 A4R	23-109-36
7034 A4T	23-109-36
7034 A4Y	23-109-36
7035 A4B	23-109-3
7035 A4Q	23-109-3
7035 A4R	23-109-3
7035 A4T	23-109-3
7035 A4Y	23-109-3
7036 A4B	23-109-4
7036 A4Q	23-109-4
7036 A4R	23-109-4
7036 A4T	23-109-4
7036 A4Y	23-109-4
7037 A4B	23-109-3
7037 A4Q	23-109-3
7037 A4R	23-109-3
7037 A4T	23-109-3
7037 A4Y	23-109-3
7038 A4B	23-109-4
7038 A4Q	23-109-4
7038 A4R	23-109-4
7038 A4T	23-109-4
7038 A4Y	23-109-4
7039 A4B	23-109-3
7039 A4Q	23-109-3
7039 A4R	23-109-3
7039 A4T	23-109-3
7040 A4B	23-109-4
7040 A4Q	23-109-4
7040 A4R	23-109-4
7040 A4T	23-109-4
7041 A4B	23-109-35
7041 A4Q	23-109-35
7041 A4R	23-109-35
7041 A4T	23-109-35
7041 A4Y	23-109-35
7042 A4B	23-109-36
7042 A4Q	23-109-36
7042 A4R	23-109-36
7042 A4T	23-109-36
7042 A4Y	23-109-36
7051 A4B	23-109-36
7051 A4Q	23-109-36
7051 A4R	23-109-36
7051 A4T	23-109-36
7052 A4B	23-109-35
7052 A4Q	23-109-35
7052 A4R	23-109-35
7052 A4T	23-109-35
7053 A4B	23-109-4
7053 A4Q	23-109-4
7053 A4R	23-109-4
7053 A4T	23-109-4
7054 A4B	23-109-3
7054 A4Q	23-109-3
7054 A4R	23-109-3
7054 A4T	23-109-3
7081 A4B	23-109-35
7081 A4R	23-109-35
7081 A4T	23-109-35
7081 A4X	23-109-35
7082 A4B	23-109-36
7082 A4R	23-109-36
7082 A4T	23-109-36
7082 A4X	23-109-36
7083 A4B	23-109-3
7083 A4R	23-109-3
7083 A4T	23-109-3
7083 A4X	23-109-3
7084 A4B	23-109-4
7084 A4R	23-109-4
7084 A4T	23-109-4
7084 A4X	23-109-4
7085 A1N	23-109-35
7086 A1N	23-109-36
7088 A1N	23-109-4
7089 A4B	23-109-35
7089 A4R	23-109-35
7089 A4T	23-109-35
7089 A4X	23-109-35
7090 A4B	23-109-36
7090 A4R	23-109-36
7090 A4T	23-109-36
7090 A4X	23-109-36
7091 A4B	23-109-3
7091 A4R	23-109-3
7091 A4T	23-109-3
7091 A4X	23-109-3
7092 A4B	23-109-4
7092 A4R	23-109-4
7092 A4T	23-109-4
7092 A4X	23-109-4
7100 AB3	23-86-3
7100 AQ3	23-86-3
7100 AT3	23-86-3
7100 AW2	23-86-3
7100 AX9	23-86-3
7100 AY3	23-86-3
7102 AB3	23-86-3
7102 AQ3	23-86-3
7102 AT3	23-86-3
7102 AW2	23-86-3
7106 VB3	23-86-3
7106 VR6	23-86-3
7106 VX9	23-86-3
7106 VY3	23-86-3
7115 AB3	23-86-3
7115 AQ3	23-86-3
7115 AT3	23-86-3
7115 AW2	23-86-3
7115 AX9	23-86-3
7130 AB3	23-86-3
7130 AQ3	23-86-3
7130 AT3	23-86-3
7130 AW2	23-86-3
7130 AY3	23-86-3
7132 AB3	23-86-3
7132 AQ3	23-86-3
7132 AR7	23-86-3
7132 AT3	23-86-3
7132 AX9	23-86-3
7132 AY3	23-86-3
7135 AB3	23-86-3
7135 AQ3	23-86-3
7135 AR7	23-86-3
7135 AT3	23-86-3
7135 AT7	23-86-3
7135 AU7	23-86-3
7135 AW2	23-86-3
7135 AX9	23-86-3
7135 AY3	23-86-3
7146 AB3	23-86-3
7146 AQ3	23-86-3
7146 AT3	23-86-3
7146 AW2	23-86-3
7146 AX9	23-86-3
7146 AY3	23-86-3
7165 AA2	23-86-3
7165 AB3	23-86-3
7165 AQ3	23-86-3
7165 AT3	23-86-3
7165 AW2	23-86-3
7165 AX9	23-86-3
7165 AY3	23-86-3
7167 AB3	23-86-3
7167 AQ3	23-86-3
7167 AT3	23-86-3
7167 AW2	23-86-3
7167 AX9	23-86-3
7167 AY3	23-86-3
7174 AW1	23-86-2
7174 AX8	23-86-2
7188 AA2	23-86-3
7188 AB2	23-86-3
7188 AM2	23-86-3
7188 AQ2	23-86-3
7188 AT2	23-86-3
7188 AW2	23-86-3
7199 AW1	23-86-2
7199 AX8	23-86-2
7210 A5B	23-109-3
7210 A5R	23-109-3
7210 A5T	23-109-3
7211 A5B	23-109-4
7211 A5R	23-109-4
7211 A5T	23-109-4
7212 A5B	23-109-35
7212 A5R	23-109-35
7212 A5T	23-109-35
7213 A5B	23-109-36
7213 A5R	23-109-36
7213 A5T	23-109-36
7214 A1B	23-108-4
7214 A1R	23-108-4
7214 A1T	23-108-4
7214 A1Y	23-108-4
7215 A1B	23-108-4
7215 A1Q	23-108-4
7215 A1R	23-108-4
7215 A1T	23-108-4
7215 A1Y	23-108-4
7216 A1B	23-108-5
7216 A1Q	23-108-5
7216 A1R	23-108-5
7216 A1T	23-108-5
7216 A1Y	23-108-5
7217 A1B	23-108-12
7217 A1Q	23-108-12
7217 A1R	23-108-12
7217 A1T	23-108-12
7217 A1Y	23-108-12
7218 A1B	23-108-16
7218 A1Q	23-108-16
7218 A1R	23-108-16
7218 A1T	23-108-16
7218 A1Y	23-108-16
7220 A1B	23-109-35
7220 A1Q	23-109-35
7220 A1R	23-109-35
7220 A1T	23-109-35
7220 A1Y	23-109-35
7221 A1B	23-109-36
7221 A1Q	23-109-36
7221 A1R	23-109-36
7221 A1T	23-109-36
7221 A1Y	23-109-36
7222 A1B	23-109-3
7222 A1Q	23-109-3

MyMopar.com

PART NUMBER	CODE
7222 A1R	23-109-3
7222 A1T	23-109-3
7223 A1B	23-109-4
7223 A1Q	23-109-4
7223 A1R	23-109-4
7223 A1T	23-109-4
7223 A1Y	23-109-4
7229 A5B	23-108-4
7229 A5R	23-108-4
7229 A5T	23-108-4
7230 A5B	23-108-4
7230 A5R	23-108-4
7230 A5T	23-108-4
7231 A5B	23-108-4
7231 A5R	23-108-4
7231 A5T	23-108-4
7232 A5B	23-108-4
7232 A5R	23-108-4
7232 A5T	23-108-4
7234 A1B	23-109-3
7234 A1L	23-109-3
7234 A1N	23-109-3
7234 A1Q	23-109-3
7234 A1R	23-109-3
7234 A1T	23-109-3
7235 A1B	23-109-4
7235 A1L	23-109-4
7235 A1N	23-109-4
7235 A1Q	23-109-4
7235 A1R	23-109-4
7235 A1T	23-109-4
7236 A1B	23-76-40
7236 A1L	23-76-40
7236 A1N	23-76-40
7236 A1Q	23-76-40
7236 A1R	23-76-40
7236 A1T	23-76-40
7237 A1B	23-76-45
7237 A1L	23-76-45
7237 A1N	23-76-45
7237 A1Q	23-76-45
7237 A1R	23-76-45
7237 A1T	23-76-45
7238 A1B	23-76-53
7238 A1L	23-76-45
7238 A1N	23-76-53
7238 A1Q	23-76-53
7238 A1R	23-76-53
7238 A1T	23-76-53
7239 A1B	23-109-35
7239 A1L	23-109-35
7239 A1N	23-109-35
7239 A1Q	23-109-35
7239 A1R	23-109-35
7239 A1T	23-109-35
7240 A1B	23-109-36
7240 A1L	23-109-36
7240 A1N	23-109-36
7240 A1Q	23-109-36
7240 A1R	23-109-36
7240 A1T	23-109-36
7241 AW1	23-86-2
7241 AX8	23-86-2
7244 A1B	23-108-15
7244 A1L	23-108-15
7244 A1N	23-108-15
7244 A1Q	23-108-15
7244 A1R	23-108-15
7244 A1T	23-108-15
7245 A1B	23-108-15
7245 A1L	23-108-15
7245 A1N	23-108-15
7245 A1Q	23-108-15
7245 A1R	23-108-15
7245 A1T	23-108-15
7246 A1B	23-108-16
7246 A1L	23-108-16
7246 A1N	23-108-16
7246 A1Q	23-108-16
7246 A1R	23-108-16
7246 A1T	23-108-16
7247 A1B	23-108-16
7247 A1L	23-108-16
7247 A1N	23-108-16
7247 A1Q	23-108-16
7247 A1R	23-108-16
7247 A1T	23-108-16
7248 A1B	23-108-4
7248 A1L	23-108-4
7248 A1N	23-108-4
7248 A1Q	23-108-4
7248 A1R	23-108-4
7248 A1T	23-108-4
7249 A1B	23-108-4
7249 A1L	23-108-4
7249 A1N	23-108-4
7249 A1Q	23-108-4
7249 A1R	23-108-4
7249 A1T	23-108-4
7250 A1B	23-108-5
7250 A1L	23-108-5
7250 A1N	23-108-5
7250 A1Q	23-108-5
7250 A1R	23-108-5
7250 A1T	23-108-5
7251 A1B	23-109-35
7251 A1L	23-109-35
7251 A1N	23-109-35
7251 A1Q	23-109-35
7251 A1R	23-109-35
7251 A1T	23-109-35
7252 A1B	23-109-36
7252 A1L	23-109-36
7252 A1N	23-109-36
7252 A1Q	23-109-36
7252 A1R	23-109-36
7252 A1T	23-109-36
7253 A4B	23-108-5
7253 A4Q	23-108-5
7253 A4R	23-108-5
7253 A4U	23-108-5
7253 A4X	23-108-5
7253 A4Y	23-108-5
7254 A4B	23-108-4
7254 A4Q	23-108-4
7254 A4R	23-108-4
7254 A4U	23-108-4
7254 A4X	23-108-4
7254 A4Y	23-108-4
7255 A4B	23-108-4
7255 A4Q	23-108-4
7255 A4R	23-108-4
7255 A4U	23-108-4
7255 A4X	23-108-4
7255 A4Y	23-108-4
7257 A4B	23-108-15
7257 A4Q	23-108-15
7257 A4R	23-108-15
7257 A4U	23-108-15
7257 A4X	23-108-15
7257 A4Y	23-108-15
7258 A4B	23-108-16
7258 A4Q	23-108-16
7258 A4R	23-108-16
7258 A4U	23-108-16
7258 A4X	23-108-16
7258 A4Y	23-108-16
7259 A4B	23-108-32
7259 A4Q	23-108-32
7259 A4R	23-108-32
7259 A4X	23-108-32
7259 A4Y	23-108-32
7261 A1B	23-108-5
7261 A1Q	23-108-5
7262 A1B	23-108-4
7262 A1Q	23-108-4
7263 A1B	23-108-4
7263 A1Q	23-108-4
7264 A1B	23-108-12
7264 A1Q	23-108-12
7265 A1B	23-108-15
7265 A1Q	23-108-15
7266 A1B	23-108-16
7266 A1Q	23-108-16
7267 A1B	23-108-32
7267 A1Q	23-108-32
7269 A4R	23-108-5
7269 A4T	23-108-5
7269 A4U	23-108-5
7269 A4W	23-108-5
7269 A4X	23-108-5
7270 A4R	23-108-4
7270 A4T	23-108-4
7270 A4U	23-108-4
7270 A4X	23-108-4
7271 A4R	23-108-4
7271 A4T	23-108-4
7271 A4U	23-108-4
7271 A4X	23-108-4
7273 A4R	23-108-15
7273 A4T	23-108-15
7273 A4U	23-108-15
7273 A4W	23-108-15
7273 A4X	23-108-15
7274 A4R	23-108-16
7274 A4T	23-108-16
7274 A4U	23-108-16
7274 A4W	23-108-16
7274 A4X	23-108-16
7275 A4R	23-108-32
7275 A4T	23-108-32
7275 A4U	23-108-32
7275 A4W	23-108-32
7275 A4X	23-108-32
7277 AW1	23-86-2
7277 AX8	23-86-2
7280 A4B	23-109-35
7280 A4L	23-109-35
7280 A4R	23-109-35
7280 A4X	23-109-35
7281 A4B	23-109-36
7281 A4L	23-109-36
7281 A4R	23-109-36
7281 A4X	23-109-36
7284 AAX	23-76-19
7284 ALF	23-76-19
7284 AOB	23-76-19
7284 AOL	23-76-19
7284 AOQ	23-76-19
7284 AOR	23-76-19
7284 AWY	23-76-19
7285 AB4	23-76-19
7285 AL3	23-76-19
7285 AM9	23-76-19
7285 AR5	23-76-19
7285 AW3	23-76-19
7285 AX9	23-76-19
7286 AB8	23-71-1
7286 AR8	23-71-1
7286 AT8	23-71-1
7286 AX8	23-71-1
7287 AR8	23-71-1
7287 AX8	23-71-1
7301 AB8	23-71-1
7301 AR8	23-71-1
7301 AT8	23-71-1
7301 AX8	23-71-1
7310 A3B	23-109-36
7310 A3R	23-109-36
7310 A3W	23-109-36
7310 Q3X	23-109-36
7311 A3B	23-109-35
7311 A3R	23-109-35
7311 A3W	23-109-35
7311 A3X	23-109-35
7312 A3B	23-109-4
7312 A3R	23-109-4
7312 A3W	23-109-4
7312 A3X	23-109-4
7313 A3B	23-109-3
7313 A3R	23-109-3
7313 A3W	23-109-3
7313 A3X	23-109-3
7314 A7A	23-76-53
7314 A7B	23-76-53
7314 A7G	23-76-53
7314 A7T	23-76-53
7314 AA3	23-76-53
7314 AB4	23-76-53
7314 AL2	23-76-53
7314 AL3	23-76-53
7315 A3B	23-76-53
7315 A3R	23-76-53
7315 A3W	23-76-53
7315 A3X	23-76-53
7315 AR5	23-76-53
7315 AW3	23-76-53
7315 AX9	23-76-53
7316 A3B	23-76-45
7316 A3R	23-76-45
7316 A3W	23-76-45
7316 A3X	23-76-45
7317 A3B	23-76-40
7317 A3R	23-76-40
7317 A3W	23-76-40
7317 A3X	23-76-40
7319 A3B	23-108-5
7319 A3R	23-108-5
7319 A3W	23-108-5
7319 A3X	23-108-5
7320 A3B	23-108-4
7320 A3R	23-108-4
7320 A3W	23-108-4
7320 A3X	23-108-4
7322 AA3	23-108-36
7322 AB4	23-108-36
7322 AF9	23-108-36
7322 AL3	23-108-36
7322 AR5	23-108-36
7322 AW3	23-108-36
7322 AX9	23-108-36
7326 A3B	23-108-16
7326 A3R	23-108-16
7326 A3W	23-108-16
7326 A3X	23-108-16
7327 A3B	23-108-15
7327 A3R	23-108-15
7327 A3W	23-108-15
7327 A3X	23-108-15
7328 A3B	23-76-34
7328 A3R	23-76-34
7328 A3W	23-76-34
7328 A3X	23-76-34
7329 AAA	23-76-19
7329 ABB	23-76-19
7329 ALF	23-76-19
7329 ALL	23-76-19

MyMopar.com

PART NUMBER	CODE
7330 AB4	23-76-19
7330 AR5	23-76-19
7330 AW3	23-76-19
7330 AX9	23-76-19
7331 A3B	23-76-18
7331 A3R	23-76-18
7331 A3W	23-76-18
7331 A3X	23-76-18
7334 AW1	23-86-2
7334 AX8	23-86-2
7335 AAX	23-108-32
7335 ABB	23-108-32
7335 AFF	23-108-32
7335 ALL	23-108-32
7335 ARR	23-108-32
7335 AWB	23-108-32
7335 AWR	23-108-32
7335 AWX	23-108-32
7335 AXX	23-108-32
7336 AA2	23-86-3
7336 AB3	23-86-3
7336 AL3	23-86-3
7336 AM2	23-86-3
7336 AW2	23-86-3
7338 AA2	23-86-3
7338 AB3	23-86-3
7338 AL3	23-86-3
7338 AM2	23-86-3
7338 AW2	23-86-3
7339 AA2	23-86-3
7339 AB3	23-86-3
7339 AL3	23-86-3
7339 AM2	23-86-3
7339 AW2	23-86-3
7342 AB3	23-86-3
7342 AL3	23-86-3
7342 AM2	23-86-3
7342 AW2	23-86-3
7344 AA2	23-86-3
7344 AB3	23-86-3
7344 AL3	23-86-3
7344 AW2	23-86-3
7345 AA2	23-86-3
7345 AB3	23-86-3
7345 AL3	23-86-3
7345 AW2	23-86-3
7353 A8T	23-108-4
7354 A8T	23-108-4
7355 A8T	23-108-4
7356 A8T	23-108-5
7366 AB8	23-71-1
7366 AQ8	23-71-1
7366 AR7	23-71-1
7366 AX8	23-71-1
7366 AY8	23-71-1
7368 AQ8	23-71-1
7368 AR7	23-71-1
7368 AT8	23-71-1
7368 AX8	23-71-1
7368 AY3	23-71-1
7368 AY8	23-71-1
7370 AB8	23-71-1
7370 AQ8	23-71-1
7370 AR7	23-71-1
7370 AX8	23-71-1
7370 AY8	23-71-1
7371 AB8	23-71-1
7371 AQ8	23-71-1
7371 AR7	23-71-1
7371 AX8	23-71-1
7371 AY8	23-71-1
7383 AB8	23-71-1
7383 AQ8	23-71-1
7383 AR7	23-71-1
7383 AR8	23-71-1
7383 AT8	23-71-1
7383 AT9	23-71-1
7383 AU8	23-71-1
7383 AX8	23-71-1
7383 AY8	23-71-1
7387 AB8	23-71-1
7387 AQ8	23-71-1
7387 AR7	23-71-1
7387 AT9	23-71-1
7387 AUB	23-71-1
7387 AX8	23-71-1
7389 AB8	23-71-1
7389 AQ8	23-71-1
7389 AR7	23-71-1
7389 AT9	23-71-1
7389 AU8	23-71-1
7389 AX8	23-71-1
7390 AB8	23-71-1
7390 AQ8	23-71-1
7390 AR7	23-71-1
7390 AT9	23-71-1
7390 AU8	23-71-1
7390 AX8	23-71-1
7392 AB8	23-71-1
7392 AQ8	23-71-1
7392 AR7	23-71-1
7392 AT9	23-71-1
7392 AU8	23-71-1
7392 AX8	23-71-1
7393 AB8	23-108-19
7398 A5B	23-109-3
7398 A5Q	23-109-3
7398 A5R	23-109-3
7398 A5X	23-109-3
7398 A5Y	23-109-3
7400 A1B	23-109-36
7400 A1R	23-109-36
7400 A1T	23-109-36
7405 A8T	23-109-36
7408 A8T	23-109-36
7413 A8T	23-109-36
7414 A8T	23-109-3
7415 A8T	23-109-3
7416 A8T	23-109-4
7417 A8T	23-109-3
7418 A8T	23-109-3
7419 A8T	23-109-4
7420 A1B	23-109-36
7420 A1Q	23-109-36
7420 A1R	23-109-36
7420 A1T	23-109-36
7421 A1B	23-109-35
7421 A1Q	23-109-35
7421 A1R	23-109-35
7421 A1T	23-109-35
7422 A8T	23-108-12
7423 A8T	23-108-12
7424 A8T	23-108-12
7425 A8T	23-108-12
7426 A8T	23-108-16
7427 A8T	23-108-16
7428 A2T	23-108-12
7429 A2T	23-108-12
7430 A2T	23-108-16
7431 A2T	23-108-4
7432 A2T	23-108-4
7433 A2T	23-108-4
7434 A2T	23-108-5
7435 A2T	23-108-4
7436 A2T	23-108-4
7437 A2T	23-108-4
7438 A2T	23-108-5
7441 A2T	23-109-36
7442 A2T	23-108-12
7443 A2T	23-108-12
7444 A2T	23-108-12
7445 A2T	23-108-12
7446 A2T	23-108-16
7447 A2T	23-108-16
7450 A2T	23-109-36
7451 A2T	23-109-3
7452 A2T	23-109-3
7453 A2T	23-109-4
7460 AR5	23-109-3
7460 AW3	23-109-3
7460 AX9	23-109-3
7461 AR5	23-109-4
7461 AW3	23-109-4
7461 AX9	23-109-4
7462 AR5	23-76-40
7462 AW3	23-76-40
7462 AX9	23-76-40
7463 AR5	23-76-45
7463 AW3	23-76-45
7463 AX9	23-76-45
7465 AR5	23-109-35
7465 AW3	23-109-35
7465 AX9	23-109-35
7466 AR5	23-109-36
7466 AW3	23-109-36
7466 AX9	23-109-36
7467 A2A	23-109-3
7467 A2T	23-109-3
7468 A2A	23-109-3
7468 A2T	23-109-3
7469 A2T	23-109-4
7470 A2A	23-109-35
7471 A2A	23-109-35
7472 A2A	23-109-35
7473 A2A	23-109-35
7474 A2A	23-109-36
7475 A8T	23-108-4
7476 A8T	23-108-4
7477 A8T	23-108-4
7478 A8T	23-108-5
7503 A9B	23-108-4
7503 A9R	23-108-4
7503 A9X	23-108-4
7506 A9B	23-108-12
7506 A9R	23-108-12
7506 A9X	23-108-12
7508 A9B	23-108-32
7508 A9R	23-108-32
7508 A9X	23-108-32
7510 A9B	23-109-35
7510 A9R	23-109-35
7510 A9X	23-109-35
7511 A9B	23-109-35
7511 A9R	23-109-35
7511 A9X	23-109-35
7513 A9B	23-109-3
7513 A9R	23-109-3
7513 A9X	23-109-3
7517 A1B	23-108-5
7517 A1Q	23-108-5
7517 A1R	23-108-5
7517 A1T	23-108-5
7517 A1Y	23-108-5
7518 A1B	23-108-4
7518 A1Q	23-108-4
7518 A1R	23-108-4
7518 A1T	23-108-4
7518 A1Y	23-108-4
7519 A1B	23-108-4
7519 A1Q	23-108-4
7519 A1R	23-108-4
7519 A1T	23-108-4
7519 A1Y	23-108-4
7520 A1B	23-108-16
7520 A1Q	23-108-16
7520 A1R	23-108-16
7520 A1T	23-108-16
7520 A1Y	23-108-16
7521 A1B	23-108-12
7521 A1Q	23-108-12
7521 A1R	23-108-12
7521 A1T	23-108-12
7521 A1Y	23-108-12
7522 A5B	23-108-5
7522 A5Q	23-108-5
7522 A5R	23-108-5
7522 A5X	23-108-5
7522 A5Y	23-108-5
7523 A5B	23-108-4
7523 A5Q	23-108-4
7523 A5R	23-108-4
7523 A5X	23-108-4
7523 A5Y	23-108-4
7525 A5B	23-108-16
7525 A5Q	23-108-16
7525 A5R	23-108-16
7525 A5X	23-108-16
7525 A5Y	23-108-16
7526 A5B	23-108-12
7526 A5Q	23-108-12
7526 A5R	23-108-12
7526 A5X	23-108-12
7526 A5Y	23-108-12
7527 A4B	23-108-5
7527 A4Q	23-108-5
7527 A4R	23-108-5
7527 A4T	23-108-5
7527 A4Y	23-108-5
7528 A4B	23-108-4
7528 A4Q	23-108-4
7528 A4R	23-108-4
7528 A4T	23-108-4
7528 A4Y	23-108-4
7529 A4B	23-108-4
7529 A4Q	23-108-4
7529 A4R	23-108-4
7529 A4T	23-108-4
7529 A4Y	23-108-4
7530 A4B	23-108-16
7530 A4Q	23-108-16
7530 A4R	23-108-16
7530 A4T	23-108-16
7530 A4Y	23-108-16
7531 A4B	23-108-12
7531 A4Q	23-108-12
7531 A4R	23-108-12
7531 A4T	23-108-12
7531 A4Y	23-108-12
7543 A1B	23-108-12
7543 A1N	23-108-12
7543 A1Q	23-108-12
7543 A1R	23-108-12
7543 A1T	23-108-12
7544 A8B	23-108-12
7544 A8Q	23-108-12
7544 A8R	23-108-12
7544 A8T	23-108-12
7546 A2B	23-108-12
7546 A2L	23-108-12
7546 A2N	23-108-12
7546 A2Q	23-108-12
7546 A2R	23-108-12
7546 A2T	23-108-12
7547 A1B	23-108-5
7547 A1N	23-108-5
7547 A1Q	23-108-5
7547 A1R	23-108-5
7547 A1T	23-108-5
7548 A8B	23-108-5
7548 A8Q	23-108-5

MyMopar.com

PART NUMBER	CODE
7548 A8R	23-108-5
7548 A8T	23-108-5
7549 A4B	23-108-5
7549 A4L	23-108-5
7549 A4N	23-108-5
7549 A4R	23-108-5
7549 A4T	23-108-5
7549 A4X	23-108-5
7550 A1B	23-108-4
7550 A1N	23-108-4
7550 A1Q	23-108-4
7550 A1R	23-108-4
7550 A1T	23-108-4
7551 A1B	23-108-4
7551 A1N	23-108-4
7551 A1Q	23-108-4
7551 A1R	23-108-4
7551 A1T	23-108-4
7552 AB4	23-101-3
7552 AQ4	23-101-3
7552 AR5	23-101-3
7553 AB4	23-101-3
7553 AQ4	23-101-3
7553 AR5	23-101-3
7554 A8B	23-108-4
7554 A8Q	23-108-4
7554 A8R	23-108-4
7554 A8T	23-108-4
7555 A8B	23-108-4
7555 A8Q	23-108-4
7555 A8R	23-108-4
7555 A8T	23-108-4
7556 A8B	23-108-4
7556 A8Q	23-108-4
7556 A8R	23-108-4
7556 A8T	23-108-4
7557 A8B	23-108-4
7557 A8Q	23-108-4
7557 A8R	23-108-4
7557 A8T	23-108-4
7558 A4B	23-108-4
7558 A4L	23-108-4
7558 A4N	23-108-4
7558 A4R	23-108-4
7558 A4T	23-108-4
7558 A4X	23-108-4
7560 A1B	23-108-16
7560 A1N	23-108-16
7560 A1Q	23-108-16
7560 A1R	23-108-16
7560 A1T	23-108-16
7561 A8B	23-108-16
7561 A8Q	23-108-16
7561 A8R	23-108-16
7561 A8T	23-108-16
7562 A4B	23-108-16
7562 A4L	23-108-16
7562 A4N	23-108-16
7562 A4R	23-108-16
7562 A4T	23-108-16
7562 A4X	23-108-16
7563 A2B	23-108-16
7563 A2L	23-108-16
7563 A2N	23-108-16
7563 A2Q	23-108-16
7563 A2R	23-108-16
7563 A2T	23-108-16
7564 A2B	23-108-4
7564 A2L	23-108-4
7564 A2N	23-108-4
7564 A2Q	23-108-4
7564 A2R	23-108-4
7564 A2T	23-108-4
7565 A2B	23-108-4
7565 A2L	23-108-4
7565 A2N	23-108-4
7565 A2Q	23-108-4
7565 A2R	23-108-4
7565 A2T	23-108-4
7566 A2B	23-108-4
7566 A2L	23-108-4
7566 A2N	23-108-4
7566 A2Q	23-108-4
7566 A2R	23-108-4
7566 A2T	23-108-4
7567 A2B	23-108-4
7567 A2L	23-108-4
7567 A2N	23-108-4
7567 A2Q	23-108-4
7567 A2R	23-108-4
7567 A2T	23-108-4
7568 A2B	23-108-5
7568 A2L	23-108-5
7568 A2N	23-108-5
7568 A2Q	23-108-5
7568 A2R	23-108-5
7568 A2T	23-108-5
7569 A5B	23-108-12
7569 A5R	23-108-12
7569 A5T	23-108-12
7570 A5B	23-108-16
7570 A5R	23-108-16
7570 A5T	23-108-16
7571 A5B	23-108-4
7571 A5R	23-108-4
7571 A5T	23-108-4
7572 A5B	23-108-4
7572 A5R	23-108-4
7572 A5T	23-108-4
7573 A5B	23-108-5
7573 A5R	23-108-5
7573 A5T	23-108-5
7576 AW1	23-86-2
7576 AX8	23-86-2
7577 AW1	23-86-2
7577 AX8	23-86-2
7578 A1B	23-108-4
	23-108-16
7578 A1N	23-108-4
7578 A1Q	23-108-4
7578 A1R	23-108-4
7578 A1T	23-108-4
7579 A1B	23-108-4
	23-108-16
7579 A1N	23-108-4
7579 A1Q	23-108-4
7579 A1R	23-108-4
7579 A1T	23-108-4
7582 AB4	23-108-19
7582 AF9	23-108-19
7582 AL3	23-108-19
7582 AM9	23-108-19
7582 AR5	23-108-19
7582 AW3	23-108-19
7582 AX9	23-108-19
7583 AB4	23-108-20
7583 AF9	23-108-20
7583 AL3	23-108-20
7583 AM9	23-108-20
7583 AR5	23-108-20
7583 AW3	23-108-20
7583 AX9	23-108-20
7584 AB4	23-101-3
7584 AQ4	23-101-3
7584 AR5	23-101-3
7584 AY3	23-101-3
7584 VR6	23-101-3
7584 VT6	23-101-3
7585 AB4	23-101-3
7585 AQ4	23-101-3
7585 AR5	23-101-3
7585 AY3	23-101-3
7585 VR6	23-101-3
7585 VT6	23-101-3
7588 AB4	23-101-3
7588 AQ4	23-101-3
7588 AR5	23-101-3
7588 AY3	23-101-3
7588 VR6	23-101-3
7589 AB4	23-101-3
7589 AQ4	23-101-3
7589 AR5	23-101-3
7589 AY3	23-101-3
7589 VR6	23-101-3
7592 AB4	23-108-20
7592 AB8	23-108-20
7592 AR7	23-108-20
7592 AT6	23-108-20
7592 AW3	23-108-20
7592 AX9	23-108-20
7592 AY3	23-108-20
7593 AB4	23-108-19
7593 AR7	23-108-19
7593 AT6	23-108-19
7593 AW3	23-108-19
7593 AX9	23-108-19
7593 AY3	23-108-19
7595 A9B	23-108-12
	23-108-15
7595 A9R	23-108-12
	23-108-15
7595 A9X	23-108-12
	23-108-15
7596 A9B	23-108-16
7596 A9R	23-108-16
7596 A9X	23-108-16
7597 A9B	23-108-4
7597 A9R	23-108-4
7597 A9X	23-108-4
7598 A9B	23-108-5
7598 A9R	23-108-5
7598 A9X	23-108-5
7624 A1N	23-108-4
7625 A1N	23-108-4
7626 A4B	23-108-4
7626 A4L	23-108-4
7626 A4R	23-108-4
7626 A4T	23-108-4
7626 A4W	23-108-4
7626 A4X	23-108-4
7627 A4B	23-108-4
7627 A4L	23-108-4
7627 A4R	23-108-4
7627 A4T	23-108-4
7627 A4W	23-108-4
7627 A4X	23-108-4
7628 A3R	23-108-4
7628 A3X	23-108-4
7629 A3R	23-108-4
7629 A3X	23-108-4
7630 AB4	23-108-4
7630 A4L	23-108-4
7630 A4R	23-108-4
7630 A4T	23-108-4
7630 A4X	23-108-4
7631 AB4	23-108-4
7631 A4L	23-108-4
7631 A4R	23-108-4
7631 A4T	23-108-4
7631 A4X	23-108-4
7632 A4B	23-108-4
7632 A4Q	23-108-4
7632 A4R	23-108-4
7632 A4U	23-108-4
7632 A4X	23-108-4
7632 A4Y	23-108-4
7633 A4B	23-108-4
7633 A4Q	23-108-4
7633 A4R	23-108-4
7633 A4U	23-108-4
7633 A4X	23-108-4
7633 A4Y	23-108-4
7636 A4R	23-108-4
7636 A4T	23-108-4
7636 A4U	23-108-4
7636 A4W	23-108-4
7636 A4X	23-108-4
7637 A4R	23-108-4
7637 A4T	23-108-4
7637 A4U	23-108-4
7637 A4W	23-108-4
7637 A4X	23-108-4
7638 A9B	23-108-4
7638 A9R	23-108-4
7638 A9X	23-108-4
7640 A4B	23-109-3
7640 A4Q	23-109-3
7640 A4R	23-109-3
7640 A4T	23-109-3
7640 A4Y	23-109-3
7641 A4B	23-109-4
7641 A4Q	23-109-4
7641 A4R	23-109-4
7641 A4T	23-109-4
7641 A4Y	23-109-4
7641 AX9	23-109-4
7646 A1B	23-108-4
7646 A1Q	23-108-4
7647 A1B	23-108-4
7647 A1Q	23-108-4
7666 VX9	23-96-10
7667 BX9	23-96-10
7668 BX9	23-79-64
7675 A4B	23-108-4
7675 A4Q	23-108-4
7675 A4R	23-108-4
7675 A4T	23-108-4
7675 A4X	23-108-4
7675 A4Y	23-108-4
7676 AA3	23-101-3
7676 AB4	23-101-3
7676 AF9	23-101-3
7676 AL3	23-101-3
7676 AM9	23-101-3
7676 AQ4	23-101-3
7676 AR5	23-101-3
7676 AW3	23-101-3
7676 AX9	23-101-3
7677 AA3	23-101-3
7677 AB4	23-101-3
7677 AF9	23-101-3
7677 AL3	23-101-3
7677 AM9	23-101-3
7677 AQ4	23-101-3
7677 AR5	23-101-3
7677 AW3	23-101-3
7677 AX9	23-101-3
7680 A4B	23-108-12
7680 A4Q	23-108-12
7680 A4R	23-108-12
7680 A4T	23-108-12
7680 A4X	23-108-12
7680 A4Y	23-108-12
7681 A4B	23-108-12
7681 A4Q	23-108-12
7681 A4R	23-108-12
7681 A4T	23-108-12

MyMopar.com

PART NUMBER	CODE
7681 A4X	23-108-12
7681 A4Y	23-108-12
7682 A4B	23-108-16
7682 A4Q	23-108-16
7682 A4R	23-108-16
7682 A4T	23-108-16
7682 A4X	23-108-16
7682 A4Y	23-108-16
7683 A4B	23-108-16
7683 A4Q	23-108-16
7683 A4R	23-108-16
7683 A4T	23-108-16
7683 A4X	23-108-16
7683 A4Y	23-108-16
7684 A4B	23-109-35
7684 A4Q	23-109-35
7684 A4R	23-109-35
7684 A4T	23-109-35
7684 A9X	23-109-35
7684 A4Y	23-109-35
7685 A4B	23-109-35
7685 A4Q	23-109-35
7685 A4R	23-109-35
7685 A4T	23-109-35
7685 A9X	23-109-35
7685 A4Y	23-109-35
7686 A4B	23-109-36
7686 A4Q	23-109-36
7686 A4R	23-109-36
7686 A4T	23-109-36
7686 A4Y	23-109-36
7689 A9B	23-108-4
7689 A9R	23-108-4
7689 A9X	23-108-4
7690 A9B	23-108-4
7690 A9R	23-108-4
7690 A9X	23-108-4
7691 A9B	23-108-5
7691 A9R	23-108-5
7691 A9X	23-108-5
7693 A9B	23-108-12
7693 A9R	23-108-12
7693 A9X	23-108-12
7694 A9B	23-108-16
7694 A9R	23-108-16
7694 A9X	23-108-16
7695 A4T	23-109-35
7695 A4X	23-109-35
7695 A9B	23-109-35
7695 A9R	23-109-35
7695 A9X	23-109-35
7696 A4T	23-109-35
7696 A9B	23-109-35
7696 A9R	23-109-35
7696 A9X	23-109-35
7697 A4T	23-109-36
7697 A9B	23-109-36
7697 A9R	23-109-36
7697 A9X	23-109-36
7698 A4T	23-109-3
7698 A9B	23-109-3
7698 A9R	23-109-3
7698 A9X	23-109-3
7699 A4T	23-109-4
7699 A9B	23-109-4
7699 A9R	23-109-4
7699 A9X	23-109-4
7718 A6A	23-108-5
7719 A6A	23-108-4
7721 A6A	23-76-34
7722 A6A	23-76-18
7723 A6A	23-109-36
7724 A6A	23-109-35
7725 A6A	23-109-4
7726 A6A	23-109-3
7727 AA4	23-76-53
7728 A6A	23-76-45
7729 A6A	23-76-40
7731 A6A	23-108-16
7732 A6A	23-108-15
7741 A4B	23-108-4
7741 A4Q	23-108-4
7741 A4R	23-108-4
7741 A4T	23-108-4
7741 A4X	23-108-4
7741 A4Y	23-108-4
7742 A4B	23-108-4
7742 A4Q	23-108-4
7742 A4R	23-108-4
7742 A4T	23-108-4
7742 A4X	23-108-4
7742 A4Y	23-108-4
7743 A4B	23-108-4
7743 A4Q	23-108-4
7743 A4R	23-108-4
7743 A4T	23-108-4
7743 A4X	23-108-4
7743 A4Y	23-108-4
7744 A4B	23-108-5
7744 A4Q	23-108-5
7744 A4R	23-108-5
7744 A4T	23-108-5
7744 A4X	23-108-5
7744 A4Y	23-108-5
7745 A1B	23-108-12
7745 A1Q	23-108-12
7745 A1R	23-108-12
7745 A1T	23-108-12
7746 A1B	23-108-16
7746 A1Q	23-108-16
7746 A1R	23-108-16
7746 A1T	23-108-16
7749 A5B	23-108-12
7749 A5R	23-108-12
7749 A5T	23-108-12
7750 A1B	23-108-12
7750 A1Q	23-108-12
7750 A1R	23-108-12
7750 A1T	23-108-12
7751 A1B	23-108-12
7751 A1Q	23-108-12
7751 A1R	23-108-12
7751 A1T	23-108-12
7752 A1Q	23-108-16
7752 A1R	23-108-16
7752 A1T	23-108-16
7754 A5B	23-108-16
7754 A5R	23-108-16
7754 A5T	23-108-16
7755 A5B	23-109-3
7755 A5R	23-109-3
7755 A5T	23-109-3
7756 A5B	23-109-4
7756 A5R	23-109-4
7756 A5T	23-109-4
7757 A4B	23-108-12
7757 A4Q	23-108-12
7757 A4R	23-108-12
7757 A4T	23-108-12
7758 A4B	23-108-16
7758 A4Q	23-108-16
7758 A4R	23-108-16
7758 A4T	23-108-16
7760 A4B	23-109-3
7760 A4Q	23-109-3
7760 A4R	23-109-3
7760 A4T	23-109-3
7761 A4B	23-109-4
7761 A4Q	23-109-4
7761 A4R	23-109-4
7761 A4T	23-109-4
7763 A4B	23-109-3
7763 A4Q	23-109-3
7763 A4R	23-109-3
7763 A4T	23-109-3
7764 A4B	23-109-4
7764 A4Q	23-109-4
7764 A4R	23-109-4
7764 A4T	23-109-4
7776 A5B	23-108-12
7776 A5R	23-108-12
7776 A5T	23-108-12
7777 A5B	23-109-3
7777 A5R	23-109-3
7777 A5T	23-109-3
7782 A2A	23-108-4
7783 A2A	23-108-5
7786 A2A	23-108-16
7793 AB3	23-86-3
7793 AL3	23-86-3
7793 AM2	23-86-3
7793 AQ3	23-86-3
7793 AW2	23-86-3
7793 AX9	23-86-3
7795 A4B	23-109-4
7795 A4R	23-109-4
7795 A4T	23-109-4
7795 A4X	23-109-4
7796 A4B	23-109-3
7796 A4R	23-109-3
7796 A4T	23-109-3
7796 A4X	23-109-3
7798 A4B	23-109-36
7798 A4R	23-109-36
7798 A4T	23-109-36
7798 A4X	23-109-36
7799 A4B	23-109-35
7799 A4R	23-109-35
7799 A4T	23-109-35
7799 A4X	23-109-35
8000 A4B	23-109-35
8000 A4R	23-109-35
8000 A4T	23-109-35
8000 A4X	23-109-35
8001 A4B	23-109-35
8001 A4R	23-109-35
8001 A4T	23-109-35
8001 A4X	23-109-35
8002 A4B	23-109-35
8002 A4R	23-109-35
8002 A4T	23-109-35
8002 A4X	23-109-35
8007 A3B	23-108-4
8007 A3R	23-108-4
8007 A3T	23-108-4
8007 A3X	23-108-4
8008 A3B	23-108-4
8008 A3R	23-108-4
8008 A3T	23-108-4
8008 A3X	23-108-4
8009 A3B	23-108-4
8009 A3R	23-108-4
8009 A3T	23-108-4
8009 A3X	23-108-4
8010 A3R	23-108-4
8010 A3T	23-108-4
8010 A3X	23-108-4
8011 A3B	23-108-5
8011 A3R	23-108-5
8011 A3T	23-108-5
8011 A3X	23-108-5
8012 A3B	23-108-12
8012 A3R	23-108-12
8012 A3T	23-108-12
8012 A3X	23-108-12
8013 A3B	23-108-16
8013 A3R	23-108-16
8013 A3T	23-108-16
8013 A3X	23-108-16
8014 A3B	23-109-36
8014 A3R	23-109-36
8014 A3T	23-109-36
8014 A3X	23-109-36
8015 A3B	23-109-35
8015 A3R	23-109-35
8015 A3T	23-109-35
8015 A3X	23-109-35
8016 A3B	23-109-35
8016 A3R	23-109-35
8016 A3T	23-109-35
8016 A3X	23-109-35
8017 A3B	23-109-4
8017 A3R	23-109-4
8017 A3T	23-109-4
8017 A3X	23-109-4
8018 A3B	23-109-3
8018 A3R	23-109-3
8018 A3T	23-109-3
8018 A3X	23-109-3
8021 A4B	23-96-3
8021 A4R	23-96-3
8021 A4X	23-96-3
8021 A4Y	23-96-3
8026 AW1	23-86-2
8026 AX8	23-86-2
8030 A9B	23-108-15
8030 A9R	23-108-15
8030 A9X	23-108-15
8031 A9B	23-108-16
8031 A9R	23-108-16
8031 A9X	23-108-16
8032 A1B	23-108-4
8032 A1Q	23-108-4
8032 A1R	23-108-4
8032 A1T	23-108-4
8032 A1Y	23-108-4
8033 A1B	23-108-4
8033 A1Q	23-108-4
8033 A1R	23-108-4
8033 A1T	23-108-4
8033 A1Y	23-108-4
8034 A1B	23-108-4
8034 A1Q	23-108-4
8034 A1R	23-108-4
8034 A1T	23-108-4
8034 A1Y	23-108-4
8035 A1B	23-108-4
8035 A1Q	23-108-4
8035 A1R	23-108-4
8035 A1T	23-108-4
8035 A1Y	23-108-4
8036 A1B	23-108-5
8036 A1Q	23-108-5
8036 A1R	23-108-5
8036 A1T	23-108-5
8036 A1Y	23-108-5
8037 A1B	23-109-35
8037 A1Q	23-109-35
8037 A1R	23-109-35
8037 A1T	23-109-35
8037 A1Y	23-109-35
8038 A1B	23-108-12
8038 A1Q	23-108-12
8038 A1R	23-108-12
8038 A1T	23-108-12
8038 A1Y	23-108-12
8039 A1B	23-108-12
8039 A1Q	23-108-12
8039 A1R	23-108-12

MyMopar.com

PART NUMBER	CODE
8039 A1T	23-108-12
8039 A1Y	23-108-12
8040 A1B	23-108-16
8040 A1Q	23-108-16
8040 A1R	23-108-16
8040 A1T	23-108-16
8040 A1Y	23-108-16
8041 A1B	23-108-16
8041 A1Q	23-108-16
8041 A1R	23-108-16
8041 A1T	23-108-16
8041 A1Y	23-108-16
8042 A1B	23-109-35
8042 A1Q	23-109-35
8042 A1R	23-109-35
8042 A1T	23-109-35
8042 A1Y	23-109-35
8043 A1B	23-109-36
8043 A1Q	23-109-36
8043 A1R	23-109-36
8043 A1T	23-109-36
8043 A1Y	23-109-36
8044 A1B	23-109-3
8044 A1R	23-109-3
8044 A1T	23-109-3
8044 A1Y	23-109-3
8045 A1B	23-109-4
8045 A1Q	23-109-4
8045 A1R	23-109-4
8045 A1T	23-109-4
8045 A1Y	23-109-4
8046 A1B	23-108-4
8046 A1Q	23-108-4
8046 A1R	23-108-4
8046 A1T	23-108-4
8046 A1Y	23-108-4
8047 A1B	23-108-4
8047 A1Q	23-108-4
8047 A1R	23-108-4
8047 A1T	23-108-4
8047 A1Y	23-108-4
8048 A1B	23-108-4
8048 A1Q	23-108-4
8048 A1R	23-108-4
8048 A1T	23-108-4
8048 A1Y	23-108-4
8049 A1B	23-108-4
8049 A1Q	23-108-4
8049 A1R	23-108-4
8049 A1T	23-108-4
8049 A1Y	23-108-4
8050 A1B	23-108-4
8050 A1Q	23-108-4
8050 A1R	23-108-4
8050 A1T	23-108-4
8050 A1Y	23-108-4
8051 A1B	23-108-5
8051 A1Q	23-108-5
8051 A1R	23-108-5
8051 A1T	23-108-5
8051 A1Y	23-108-5
8052 A1B	23-108-12
8052 A1Q	23-108-12
8052 A1R	23-108-12
8052 A1T	23-108-12
8052 A1Y	23-108-12
8053 A1B	23-108-12
8053 A1Q	23-108-12
8053 A1R	23-108-12
8053 A1T	23-108-12
8053 A1Y	23-108-12
8054 A1B	23-108-16
8054 A1Q	23-108-16
8054 A1R	23-108-16
8054 A1T	23-108-16
8054 A1Y	23-108-16
8055 A1B	23-109-35
8055 A1Q	23-109-35
8055 A1R	23-109-35
8055 A1T	23-109-35
8055 A1Y	23-109-35
8056 A1B	23-109-35
8056 A1Q	23-109-35
8056 A1R	23-109-35
8056 A1T	23-109-35
8056 A1Y	23-109-35
8057 A1B	23-109-35
8057 A1Q	23-109-35
8057 A1R	23-109-35
8057 A1T	23-109-35
8057 A1Y	23-109-35
8058 A1B	23-109-35
8058 A1Q	23-109-35
8058 A1R	23-109-35
8058 A1T	23-109-35
8058 A1Y	23-109-35
8059 A1B	23-109-36
8059 A1Q	23-109-36
8059 A1R	23-109-36
8059 A1T	23-109-36
8059 A1Y	23-109-36
8060 A1B	23-109-3
8060 A1Q	23-109-3
8060 A1R	23-109-3
8060 A1T	23-109-3
8060 A1Y	23-109-3
8061 A1B	23-109-3
8061 A1Q	23-109-3
8061 A1R	23-109-3
8061 A1T	23-109-3
8061 A1Y	23-109-3
8062 A1B	23-109-4
8062 A1Q	23-109-4
8062 A1R	23-109-4
8062 A1T	23-109-4
8062 A1Y	23-109-4
8063 A1B	23-109-35
8063 A1Q	23-109-35
8063 A1R	23-109-35
8063 A1T	23-109-35
8063 A1Y	23-109-35
8064 A1B	23-109-35
8064 A1Q	23-109-35
8064 A1R	23-109-35
8064 A1T	23-109-35
8064 A1Y	23-109-35
8065 A1B	23-109-36
8065 A1Q	23-109-36
8065 A1R	23-109-36
8065 A1T	23-109-36
8065 A1Y	23-109-36
8066 A1B	23-109-3
8066 A1Q	23-109-3
8066 A1R	23-109-3
8066 A1T	23-109-3
8066 A1Y	23-109-3

MyMopar.com

NOTES

MyMopar.com

VENDOR NUMBER CROSS REFERENCE LIST

CARTER

VENDOR NUMBER	CHRYSLER NUMBER
A1-126	1827 965
A13-3800 V568	2084 587
AFB-2448 S	1731 514
AFB-2641 S	1822 052
AFB-2642 S	1822 053
AFB-2650 S	1826 079
AFB-2651 S	1826 080
AFB-2652 S	1826 081
AFB-2653 S	1826 082
AFB-2686 S	1821 997
AFB-2686 S	1827 997
AFB-2744 S	1852 574
AFB-2773 S	1855 634
AFB-2786 S	1858 469
AFB-2787 S	1858 470
AFB-2790 S	1858 473
AFB-2791 S	1858 474
AFB-2794 S	1858 476
AFB-2797 S	1858 479
AFB-2798 S	1858 480
AFB-2799 S	1858 481
AFB-2801 S	1858 758
AFB-2805 S	1858 776
AFB-2806 S	1858 777
AFB-2812 S	1858 976
AFB-2813 S	1858 975
AFB-2823-S	1944 572
AFB-2854 S	1859 935
AFB-2855 S	1945 167
AFB-2856 S	1945 168
AFB-2903 S	1947 809
AFB-2906 S	1947 733
AFB-2925 S	2120 052
AFB-2927 S	2120 054
AFB-2948 S	2120 738
AFB-2950 S	2120 740
AFB-2968 S	2121 208
AFB-2969 S	2121 209
AFB-2991 S	2121 728
AFB-3083 S	2129 881
AFB-3101-S	2202 416
AFB-3103-S	2202 418
AFB-3105-S	2202 420
AFB-3107-S	2202 422
AFB-3108 S	2202 423
AFB-3131 S	2202 889
AFB-3133-S	2202 891
AFB-3134-S	2202 892
AFB-3140-S	2203 126
AFB-3152 S	2205 730
AFB-3213-S	E-6 954-M
AFB-3214-S	E-6 955-M
AFB-3247 S	2203 138
AFB-3249-S	2203 142
AFB-3251 S	2205 758
AFB-3252 S	2205 760
AFB-3253 S	2205 761
AFB-3256-S	2205 766
AFB-3257-S	2205 768
AFB-3258 S	2206 468
AFB-3259 S	2299 175
AFB-3374-S	2268 767
AFB-3375-S	2268 768
AFB-3392-S	E-7 629-M
AFB-3393-S	E-7 630-M
AFB-3394-S	E-7 631-M
AFB-3437-S	2402 211
AFB-3438-S	2402 212
AFB-3447-S	2402 359
AFB-3452 S	2402 304
AFB-3478-S	2402 515
AFB-3505-S	2402 727
AFB-3543 S	E 8 082M
AFB-3564 S	E 8 134M
AFB-3611 S	2463 073
AFB-3614 S	2463 076
AFB-3615 S	2463 077
AFB-3644 S	2463 364
AFB-3705 S	2463 977
AFB-3853-S	2532 309
AFB-3855-S	2532 305
AFB-3858-S	2532 302
AFB-3859-S	2532 316
AFB-3861-S	2532 320
AFB-3871-S	2532 312
B-9211 AX	*1324 432
BB1-289 SD	2125 818
BB1-638-S	2125 839
BBD-908-S	1533 595
BBD-2162 SA	1611 551
BBD-2178 S	1613 077
BBD-2229-S	1617 862
BBD-2250-S	1671 799
BBD-2262 S	1632 459
BBD-2274-SA	1634 335
BBD-2291-S	E-3 745-M
BBD-2310-S	1637 361
BBD-2313-S	1637 364
BBD-2403-S	1674 766
BBD-2407-S	1675 941
BBD-2409 S	1631 370
BBD-2420-S	1639 708
BBD-2489 SA	1732 572
BBD-2522 SB	1733 826
BBD-2527 SA	1733 831
BBD-2550 SA	1736 098
BBD-2620 SA	1738 416
BBD-2637 S	1821 960
BBD-2685 S	1827 998
BBD-2733 S	1852 129
BBD-2772 S	1855 633
BBD-2795 S	1858 477
BBD-2822 S	1944 571
BBD-2832 S	1944 683
BBD-2871 S	1859 985
BBD-2896 S	1826 888
BBD-2905 SA	1947 373
BBD-2921 S	2120 048
BBD-2923 S	2120 050
BBD-3132 S	2202 890
BBD-3212-S	E-6 953-M
BBD-3240-S	2203 130
BBD-3241-S	2203 132
BBD-3244 S	2299 172
BBD-3245 S	2299 173
BBD-3283-S	2264 857
BBD-3386-S	2125 957
BBD-3389-S	E-7 614-M
BBD-3390-S	E-7 942-M
BBD-3472-S	2402 508
BBD-3473-S	2402 509
BBD-3475-S	2402 511
BBD-3476-S	2402 512
BBD-3682-S	2463 849
BBD-3684 S	2463 828
BBD-3685 S	2463 855
BBD-3843-S	2468 779
BBD-3847-S	2468 791
BBD-3849-S	2532 326
BBD-3767-S	2465 531
BBS-994 S	1631 362
BBS-2215-S	1617 194
BBS-2221-S	E-3 571-M
BBS-2227-S	1617 816
BBS-2248-S	1631 360
BBS-2262 S	1632 459
BBS-2360-S	E-4 057-M
BBS-2403-S	1674 766
BBS-2410-S	1675 971
BBS-2412 SA	1639 710
BBS-2416-S	1676 275
BBS-2421 S	1639 710
BBS-2478 S	1678 676
BBS-2604 S	1739 401
BBS-2624 S	1677 063
BBS-2900 SA	1947 843
BBS-2905 S	1947 373
BBS-2985 SB	2121 505
BBS-3000 S	2121 783
BBS-3001 S	2121 784
BBS-3053 S	2129 177
BBS-3097 S	2202 412
BBS-3098 S	2202 885
BBS-3110 S	2202 568
BBS-3111-S	2202 569
BBS-3112-S	2202 570
BBS-3121 S	2202 724
BBS-3127 S	2202 884
BBS-3128 S	2202 885
BBS-3129-S	2202 886

MyMopar.com

VENDOR NUMBER CROSS REFERENCE LIST

CARTER

VENDOR NUMBER	CHRYSLER NUMBER
BBS-3135-S	2202 893
BBS-3136-S	2202 894
BBS-3138-S	2202 968
BBS-3139-S	2202 969
BBS-3229-S	2206 220
BBS-3230-S	2206 221
BBS-3231-S	2206 222
BBS-3232-S	2206 223
BBS-3234-S	2206 226
BBS-3235-S	2206 227
BBS-3236-S	2206 228
BBS-3237-S	2264 570
BBS-3238-S	2264 571
BBS-3239-S	2264 572
BBS-3272-S	2264 846
BBS-3273-S	2264 847
BBS-3274-S	2264 848
BBS-3275-S	2264 849
BBS-3276-S	2264 850
BBS-3277-S	2264 851
BBS-3278-S	2264 852
BBS-3279-S	2264 853
BBS-3280-S	2264 854
BBS-3281-S	2264 855
BBS-3286 S	2206 227
BBS-3287-S	2206 230
BBS-3363-S	E-7 470-M
BBS-3364 S	E 7 475M
BBS-3401-S	2299 153
BBS-3491-S	2402 710
BBS-3492-S	2402 711
BBS-3510 S	2299 203
BBS-3511 S	2299 204
BBS-3512 S	2299 205
BBS-3590 S	2463 061
BBS 3664 S	2463 816
BBS-3675 S	2463 831
BBS-3676 S	2463 832
BBS-3677 S	2463 833
BBS-3679 S	2463 845
BBS-3681 S	2463 856
BBS-3700-S	2465 126
BBS-3782-S	2465 874
BBS-3812-S	2468 237
BBS-3813-S	2468 238
BBS-3833-S	2468 751
BBS-3834-S	2468 752
BBS-3835-S	2468 765
BBS-3836-S	2468 766
BBS-3837-S	2468 753
BBS-3839-S	2468 767
BBS-3841-S	2468 769
D6G1	871 552
D6H2	1312 178
D6P2	1317 907
DTE 1	1317 256
D-T-G-1	1269 404
DTG-2	1269 404
DTL-2	1400 468
E7B1	1138 880
E-7D3	1138 897
E-7E	1138 898
E7J2	1140 005
E-7L	1140 042
E7R1	1318 987
E-7S	1315 677
E-7T	1317 258
E7U2	1317 259
E9A1	1325 841
E-9-B-1	1325 840
E9G1	1532 831
E9T1	1551 025
E9U1	1551 026
E9V1	1551 047
E9X1	1506 462
E9Y1	1507 195
ETW 1	929 845
EQ-200310	1924 069
F-7D	1138 897
F23-39	1450 661
F23-41	1402 616
F23-44 U.	1450 885
F23-46 U.	1450 660
F23-57 U	1879 294
F23-A20	1320 527
F30-60	1138 687
F30-76	1879 458
F63-129	1316 416
F63-146	1402 617
F 842-S	1402 141
F 862-S	1402 143
F-2051-S	1502 618
IA-17	864 599
IA-24	662 811
IA-30	637 192
IA-45	697 695
IA-64	1140 006
IA-71	1404 605
IA-77	1553 170
IA-88	1553 097
IA-89	1553 098
IA-90	1610 799
IA-94	1618 129
IA-96	1631 364
IA-103	1676 726
M71-A-33	1786 666
M-121-133	1124 946
M-121-134	1400 185
M 203-87S	1676 728
M-639 SB	1450 705
M-750-SA	1450 720
M-834 S	1450 705
M-856 SA	1450 703
M-857 S	1450 706
M-859 SA	1489 858
M-875 SA	1450 704
M-2000 S	1450 720
M-2077 S	1450 719
M-2342 S	1643 175
M-2491 S.	1677 406
M-2503-SA	2275 574
M-2594-S	1752 534
M-2889-S	1881 926
M-2942-S	2084 279
M-2953-S	2084 058
M-2996-S	2084 859
M-3201 S	2240 528
M-3219 S	2279 903
M-3262 S	2279 904
M-3268 S	2279 901
M-3271-SC	2275 579
M-3446 S	2421 466
M-3497 S	2421 110
M-3672 S	2495 528
M-3673 S	2495 527
M-3674 S	2495 526
M-3764-S	2495 532
M-3815-S	2525 274
M-20006	1321 285
M-20007-B	1450 023
M-20017	1450 022
M-20051	1752 558
M-20059	2240 540
RA-2	1501 649
S-2714-1	1935 133
WCD-931-SC	1408 602
WCD-992-SA	1489 993
WCD-2039-SA	1535 929
WCFB-2041-S	1535 888
WCFB-2210-S	1615 831
WCFB-2253-S	1631 216
WCFB-2302-SB	1636 645
WCFB-2303-SB	1636 649
WCFB-2311-SA	1637 362
WCFB-2314-S	1637 365
WCFB-2317-SA	1635 715
WCFB-2365-S	E-3 889-M
WCFB-2367-SA	1671 906
WCFB-2442-S	1731 473
WCFB-2444-S	1731 475
WCFB-2445-S	1731 476
WCFB-2476-S	1731 639
WCFB-2530 SA	1733 846
WCFB-2531-S	1733 847
WCFB-2532 S	1733 848
WCFB-2534-S	1733 850
WCFB-2535 S	1733 851
WCFB-2588 S	1739 337
WCFB-2589 S	1739 338
WCFB-2590 S	1739 339
WCFB-2628 S	E-4534-M
WCFB-2631 S	1821 709

MyMopar.com

CARTER

VENDOR NUMBER	CHRYSLER NUMBER
WCFB-2632 SA	1821 710
WCFB-2635 S	1821 885
WCFB-2636 S	1821 886
WCFB-2660 S	1827 687
WCFB-2698 S	1851 490
WCFB-2741 S	1852 257
WCFB-2742 S	1852 258
WCFB-2761 S	1855 390
WCFB-2762 S	1855 391
WCFD-2622 SA	1821 318
WCFD-2628-S	E-4534-M
YH-2911 S	E-5815-M
YH-3035-S	E-6206-M
YH-3195-S	E-6 864-M
YH-3724 S	2407 601
1-432-S	1073 080
1A-17	864 599
1A-23	561 378
1A-24	662 811
1A-30	637 192
1A-45	697 695
1A-46	637 191
1A-64	1140 006
1A-71	1404 605
1A-77	1553 170
1A-88	1553 097
1A-89	1553 098
1A-90	1610 799
1A-94	1618 129
1-A-96	1631 364
1A-99	1615 551
1A-103	1676 726
2-118	1073 092
3-182	1945 482
3-449 S	957 797
3-971 S	1618 270
4-475-S	1073 083
4A-105-S	1190 551
4A-114 S	1190 551
6E-2	912 412
6N 1	1317 959
6-N-2	1317 959
6-773 S	1409 449
7-138-S	1075 634
10-58	1826 863
11B-79	699 811
11B-186-S	1070 743
11B-193	1073 093
11B-219-S	1125 788
15-22 S	2495 953
15-58 S	1826 863
15-62 S	1826 346
16-25	2084 108
16-26	1826 845
16-27	2084 111
16-29	1826 887
16-35	1826 347
16-39	1826 348
16-40	1826 349
16-42	1826 884
16-43	1826 875
16-45	1826 840
16-51	1826 861
16-70	1828 882
16-76	2448 998
16-109	2084 112
16-111	2084 110
16-113	2084 109
16-117	2084 165
16-118	2084 179
16-119	2084 184
16-120	2084 194
16-122	2084 202
16-157	2240 479
16-158	2240 488
16-160	2240 466
16-161	2240 463
16-162	2275 252
16-165	2240 473
16-176	2585 404
16-192	2299 059
16-206	2299 142
16-216	2299 187
16-217	2299 230
16-344	2585 400
16-367	2585 460
20-32	645 619
20-42	645 619
20-268-S	2299 251
25-44-S	645 615
25-48-S	605 063
25-82-S	690 676
25-98-S	1400 821
25-148-S	1072 972
25-202-S	1404 577
25-216-S	1531 362
25-225-S	1539 152
25-254-S	1610 738
25-273 S	2084 132
25-278-S	1618 234
25-279-S	1618 235
25-280-S	1618 288
25-291-S	1631 436
25-337 S	1826 833
25-343 S	1826 834
25-348 S	1826 844
25-362 S	2084 180
25-392 S	2196 207
25-394 S	2240 410
25-426 S	2240 401
25-428 S	2240 438
25-437 S	2240 493
25-440 S	2275 281
25-445 S	2299 287
25-478 S	2299 283
25-481 S	2299 284
25-483 S	2299 285
25-485 S	2299 286
25-491 S	2299 288
25-513 S	2299 289
25-522 S	2299 290
25-662 S	2299 291
25-664 S	2299 293
25-673-S	2299 126
25-690-S	2299 180
25-705 S	2299 292
25-734 S	2448 975
30-37	1138 687
30-58	1826 353
30-73	1618 236
30-78	1826 864
30-78-S	1826 864
3849-S	*2536 885
3850-S	*2532 327
4125-S	*2536 885
4127-S	*2536 885
61-288	1075 669
61-314-S	1323 827
61-502	1631 372
62-208-S	1631 437
64-60-S	697 709
64-74 S	871 999
64-118-S	1140 849
64-134-S	1404 612
64-137-S	1404 604
64-145 S	1610 746
64-148 S	1533 778
64-160-S	1610 784
64-161-S	1610 774
64-163-S	1618 107
64-174-S	1618 150
64-176-S	1618 250
64-182-S	1631 398
64-183-S	1631 409
64-184 S	1631 453
64-187-S	1631 515
64-210 S	1826 607
64-212 S	1826 369
64-215 S	1826 846
64-225 S	2084 163
64-226-S	2196 214
64-237 S	2240 402
64-279 S	2299 114
64-304-S	2299 217
65-34-S	1533 785
71A-17	622 462
75-118 S	1631 471
75-126	2240 492
75-933	1551 493
75-934	1551 494
75-943	1553 141
75-990	1553 168
75-991	1610 806

MyMopar.com

VENDOR NUMBER CROSS REFERENCE LIST

CARTER

VENDOR NUMBER	CHRYSLER NUMBER
75-1125	1610 869
75-1143	1618 251
75-1144	1618 297
75-1145	1631 327
75-1160	1631 394
75-1168	1631 38
75-1177	1631 438
75-1178	1631 440
75-1180	1631 442
75-1186	1631 471
75-1207	1631 504
75-1208	1631 502
75-1217	1631 613
75-1225	1631 680
75-1247	1631 704
75-1248	1631 705
75-1251	1631 783
75-1263	1676 675
75-1264	1676 690
75-1273	1676 695
75-1274	1676 696
75-1278	1676 693
75-1280	1676 701
75-1281	1676 702
75-1327	1676 755
75-1328	1676 769
75-1336	1676 813
75-1344	1676 814
75-1365	1826 185
75-1370	1826 189
75-1373	1826 192
75-1376	1826 221
75-1387	1826 280
75-1391	1826 413
75-1409	1826 881
75-1414	1826 879
75-1426	1826 848
75-1427	1826 883
75-1429	1826 843
75-1442	1826 886
75-1453	2084 131
75-1476	2084 183
75-1477	2084 182
75-1482	2084 182
75-1494	2196 223
75-1507	2196 215
75-1518	2240 403
75-1519	2240 439
75-1525	2240 476
75-1526	2240 492
75-1567	2275 282
75-1575	2275 285
75-1579	2299 001
75-1581	2299 009
75-1582	2299 016
75-1583	2299 020
75-1590	2299 111
75-1591	2299 112
75-1592	2299 110
75-1593	2299 108
75-1594	2299 113
75-1598	2299 115
75-1599	2299 116
75-1600	2299 117
75-1601	2299 118
75-1605	2299 120
75-1615	2299 208
75-1616	2299 218
75-1617	2299 222
75-1618	2299 224
75-1626	2448 984
75-1627	2448 995
75-1630	2495 995
75-1641	2585 420
75-1642	2585 417
75-1643	2585 421
75-1645	2585 419
75-1650	2585 450
75-1651	2585 457
75-1652	2585 422
76-34	1066 646
76-35	1066 647
80-46-S	1075 655
86-11	120 380
86-15	120 382
86-26	121 752
101-12	131 974
101-173	100 944
101-178	963 799
101-179	1075 631
101-181	963 798
101-195	1073 097
101-200 S	1073 098
101-203	1075 670
101-234 S	188 079
101-248	1193 218
101-322	271 122
105-A-13	120 369
105A-51	271 506
114-137-S	1631 516
115-239	1618 258
118-53-S	1075 660
120-155	1826 235
120-159	1400 857
120-160	1631 540
120-161	2448 999
120-163	*1826 208
120-164	1676 758
120-165	1484 849
120-166	1610 758
120-173 S	1531 177
120-174	1631 629
120-175	1676 717
120-177	2299 231
120-182 S	1531 178
120-183 S	1531 179
120-185	1676 692
120-186	1631 541
120-189	1826 865
120-195 S	1553 088
120-196	1610 759
120-199-S	1610 880
120-200-S	1610 811
120-201 S	1610 812
120-205-S	1610 881
120-206-S	1610 882
120-207 S	1610 881
120-210 S	1618 217
120-211-S	1618 218
120-212-S	1618 219
120-213-S	1618 220
120-214-S	1618 221
120-215-S	1618 222
120-217 S	1631 354
120-221 S	1631 617
120-224	1676 691
120-226	1676 770
120-228	2084 166
120-231 S	1826 849
120-232 S	1826 837
120-245 S	2196 203
120-248 S	2240 448
120-249	2240 437
120-251 S	2240 485
120-252	2240 464
120-253 S	2240 404
120-263S	2299 005
120-264 S	2299 000
120-265S	2299 109
120-267 S	2448 974
120-268 S	2299 251
120-272	2299 139
120-277 S	2299 179
120-284 S	2448 996
120-294 S	2585 406
120-295-S	2525 791
120-296-S	2585 410
120-299-S	2585 408
120-304-S	2585 459
121-13	645 652
121-78	1330 873
121-113	1073 085
121-115	929 850
121-175	1330 874
121-176	1330 875
121-202	1409 446
121-225	1610 846
121-229	1618 262
121-274	1631 520
121-278	2299 282
121-292	2299 140

MyMopar.com

VENDOR NUMBER CROSS REFERENCE LIST

CARTER

VENDOR NUMBER	CHRYSLER NUMBER
121-306	2299 125
121-309	2299 144
121-331	2299 127
136-27	1141 431
137 A	1063 442
149-82-S	1073 090
156-29	862 072
156-92	188 947
156-116 S	1826 876
159-43 S	1075 762
159-59-S	650 193
159-93-S	867 322
159-106-S	1073 075
163-22	1073 099
163-28	1117 474
164 A	1826 425
170-AA-312 SU	1610 845
170-AB-317 SU	1610 864
170-AB-323 SU	1610 863
170-AB-426 S	1676 679
170-AC-323 S	1631 330
170-AC-325 SU	1676 733
170-AC-358 S	1631 396
170-AC-385 S	1631 493
170-AE-320 SU	1610 865
170-AE-479 S	1826 880
170-AH-312 SU	1610 866
170-AN-320 S	1631 626
170-AN-479 S	1676 751
170-AR-358 S	1618 307
170-AR-538 S	1826 398
170-AS-484 S	1676 837
170-AU-465 S	1737 782
170-AU-653 S	2121 955
170-AU-654 S	2121 956
170-AU-797 S	E 8 166M
170-AV-464 S	1737 780
170-AV-818-S	2469 067
170-AV-829-S	2532 570
170-AV-835-S	E-9314-M
170-AW-484 S	1676 837
170-AX-514 S	1821 963
170-AX-596 S	1858 523
170-AX-801 S	2463 159
170-AZ-538 S	1826 847
170-BA-655 S	2121 957
170-BA-706 S	2264 580
170-BA-751 S	2402 201
170-BA-780 S	E 7 109M
170-BA-799 S	E 8 165M
170-BA-817-S	2468 738
170-BC-634 S	1947 765
170-BC-716 S	2264 579
170-BC-717 S	2268 504
170-BC-760 S	2402 526
170-BC-761 S	2402 527
170-BC-798 S	2406 764
170-EC-634 F	1947 765
170-N-312 S	1618 116
170-P-312 S	1618 111
170-T-320 S	1676 720
170-X-312 S	1676 775
172 A	1826 503
192-23 S	1479 527
195-65-U	1631 640
195-66-U	1674 812
202-24 S	1404 610
202-35-S	1538 426
202-75-S	1557 277
202-76-S	1557 281
202-80-U	1631 362
202-83-U	1631 370
202-229-A	2585 425
202-230-S	2585 418
202-232-S	2585 423
203	1826 428
203-53 S	2084 130
205	1826 429
212 D	1826 505
213 A	1826 430
213-14-S	1400 883
214 A	1826 506
215	1826 431
218	1501 649
218-10	1075 671
224-10-S	1313 707
224-11-S	1316 029
224-13-S	1316 031
224-15-S	1316 033
225	1826 432
234 A	1826 433
236	1826 434
237	1826 435
242	1826 436
243	1826 437
244	1826 438
247 A	1826 439
251	1826 440
252	1826 441
255	1826 442
264 A	1826 443
265	1826 444
269 A	1826 445
278	1826 446
282 A	1826 504
288	1826 507
297	1826 508
298	1826 509
299	1826 510
300	1826 511
302	1826 512
309	1826 513
310	1826 514
311	1826 515
313	1826 560
316	1826 554
317	1826 552
318	1826 549
319	1826 561
320	1826 562
325	1826 615
326	1826 616
333	2084 129
335	2084 192
336	2084 193
337	2084 200
340	2196 221
341	2196 222
342	2196 209
343	2196 211
344	2196 212
354	2240 472
355	2240 470
487	2299 129
488	2299 182
494	2299 227
498	2299 197
499	2448 978
500	2448 981
501	2448 986
504	2495 951
506	2525 770
512	2585 402
900-1	2084 682
900-2	2084 683
900-4	2084 684
900-5	2084 685
900-6	2084 709
900-10	2084 686
900-14	2084 687
900-15	2084 688
900-16	2084 689
900-22	2084 690
900-25	2084 691
900-26	2084 692
900-29	2084 693
900-35	2084 694
900-40	2084 695
900-47	2084 696
900-48	2084 687
900-49	2084 698
900-52	2084 699
900-53	2084 700
900-55	2084 701
900-67	2084 702
900-68	2084 703
900-69	2084 704
900-70	2084 705
900-71	2084 706
900-81	2084 707
900-89	2084 708

MyMopar.com

VENDOR NUMBER CROSS REFERENCE LIST

CARTER

VENDOR NUMBER	CHRYSLER NUMBER
900-100	2196 226
900-102	2196 228
900-103	2196 229
900-104	2196 230
900-105	2196 231
900-106	2196 232
900-107	2196 233
901-1	2196 227
901-2	2196 230
901-101	2299 080
901-104	2299 077
901-105	2299 069
901-106	2299 076
901-107	2299 070
901-131	2299 078
901-134	2299 074
901-135	2299 073
901-139	2299 072
901-142	2299 071
901-143	2299 075
901-144	2299 079
901-145	2299 130
901-146	2299 184
901-148	2299 220
901-149	2275 296
901-150	2275 297
901-151	2299 197
901-152	2448 979
901-153	2448 982
901-154	2448 987
901-155	2495 952
901-156	2495 986
901-157	2495 987
901-158	2495 989
901-159	2495 990
901-160	2495 991
901-161	2495 993
901-162	2525 774
901-163	2525 773
901-164	2275 295
901-165	2525 771
901-166	2585 403
902-145	2448 905
902-152	2448 906
902-156	2448 910
902-173	2448 901
902-174	2448 904
902-175	2448 908
902-176	2448 902
902-177	2448 903
902-178	2448 907
902-179	2448 909
902-187	2299 199
905-1	2084 176
905-1-C	2084 176
905-2	2084 177
905-3	2084 178
905-4	2084 187
905-5	2084 189
905-6	2084 190
905-7	2084 198
905-8	2084 199
905-9	2084 196
905-11	2240 408
905-12	2240 465
905-13	2240 467
905-14	2240 468
905 15	2240 491
905-16	2240 471
905-17	2240 475
905-18	2240 477
905-19	2240 480
905-20	2240 490
905-21	2240 482
905-22	2240 484
905-23	2240 489
905-24	2275 251
905-25	2275 253
905-26	2240 498
905-27	2240 495
905-28	2240 494
905-29	2240 496
905-31	2240 486
905-33-C	2240 487
905-39	2275 278
905-41-C	2196 219
905-42	2299 003
905-43	2299 007
905-44	2299 017
905-45	2299 021
905-46	2299 030
905-47	2299 057
905-48	2299 060
905-49	2240 497
905-50	2299 169
905-51	2299 176
905-52	2299 181
905-54	2299 186
905-55	2299 188
905-56	2299 207
905-57	2299 211
905-58	2299 219
905-59	2299 226
905-60	2299 233
905-61	2299 235
905-62	2299 295
905-63	2448 946
905-64	2299 195
905-65	2448 988
905-66	2448 977
905-67	2448 980
905-68	2448 983
905-69	2448 985
905-70	2448 997
905-71	2495 950
905-72	2495 969
905-73	2525 769
905-74	2525 776
905-75	2525 778
905-76	2525 780
905-78	2585 401
905-79	2585 405
905-80	2585 407
905-81	2585 409
905-82	2585 411
905-83	2585 425
905-84	2585 426
905-85	2585 427
1341 B	1501 648
1503 N	1826 598
1513 N	1826 447
1526 N	1826 448
1533 N	1826 596
1534 P	1826 517
1578 N	1826 449
1579 N	1826 450
1728 N	1826 451
1740 N	1826 452
1748 N	1826 453
1752 N	1826 454
1753 N	1826 455
1757 N	1826 456
1758 N	1826 457
1766 N	1826 458
1768 N	1826 459
1775 N	1826 460
1779 N	1826 461
1786 N	1826 462
1789 N	1826 464
1791 N	1826 465
1793 N	1826 466
1794 N	1826 467
1795 N	1826 468
1801 N	1826 469
1806 N	1826 470
1817 N	1826 471
1820 N	1826 472
1825 N	1826 473
1826 N	1826 474
1834 N	1826 475
1835 N	1826 476
1838 N	1826 477
1846 N	1826 478
1857 N	1826 479
1858 N	1826 480
1859 N	1826 481
1860 N	1826 482
1862 N	1826 483
1863 N	1826 484
1864 N	1826 485
1869 N	1826 486

MyMopar.com

CARTER

VENDOR NUMBER	CHRYSLER NUMBER
1876 N	1826 546
1878 N	1826 489
1879 N	1826 490
1880 N	1826 491
1881 N	1826 492
1882 N	1826 493
1883 N	1826 494
1884 N	1826 495
1885 N	1826 496
1886 N	1826 497
1887 N	1826 498
1888 N	1826 499
1889 N	1826 500
1890 N	1826 501
1891 N	1826 502
1892 N	1826 519
1893 N	1826 520
1894 N	1826 521
1895 N	1826 522
1896 N	1826 518
1897 N	1826 523
1898 N	1826 535
1899 N	1826 536
1900 N	1826 525
1901 N	1826 524
1903 N	1826 547
1905 N	1826 530
1906 N	1826 526
1907 N	1826 548
1908 N	1826 531
1909 N	1826 532
1910 N	1826 533
1912 N	1826 528
1913 N	1826 555
1914 N	1826 527
1915 N	1826 553
1916 N	1826 551
1917 N	1826 542
1918 N	1826 543
1919 N	1826 544
1925 N	1826 550
1926 N	1826 563
1927 N	1826 564
1928 N	1826 565
1942 N	1826 591
1943 N	1826 592
1948 N	1826 611
1949 N	1826 612
1951 N	1826 613
1955 N	1826 620
1956-N	1826 617
1959 N	1826 859
1960	1826 858
1961 N	1826 857
1962 N	1826 856
1964-N	1826 854
1973 N	1826 877
1975-N	1826 878
1976 N	1826 760
1978 N	1826 761
1983 N	2084 128
1984-N	2084 162
1988 N	2084 164
1989 N	2084 176
1993 N	2084 188
1996 N	2084 191
5010 N	2196 216
5011 N	2196 217
5012 N	2196 218
5013 N	2196 219
5015 N	2196 213
5016 N	2196 220
5025-N	2196 246
5027 N	2084 197
5500	1075 648

MyMopar.com

VENDOR NUMBER CROSS REFERENCE LIST

HOLLEY

VENDOR NUMBER	CHRYSLER NUMBER
8-R-722	1843 429
8-R-799	2084 720
8-R-859	2084 721
15-R-36	2196 238
15-R-40	2084 712
18-R-55-AS	2084 713
18R-87A	2299 042
22-9-40-61	2196 205
22R-40-53	2299 239
22R-40-56	2299 248
22R-40-57	2299 245
22R-40-58	2299 242
22R-40-59	2299 041
22-R-40-60	2084 714
22-R-40-64	2196 240
25R-80-A-66	2196 241
25R-166 A	2299 040
25-R-237-A-65	2084 715
25-R-375-A	2525 784
27-R-109	2084 718
27-R-152	2084 719
30-R-365-A	2495 960
30-R-366-A	2495 964
30R-369-A	2525 782
34R-3109 A	2299 039
34R-3629 A	2299 238
34R-3632 A	2299 241
34R-3642 A	2299 244
34R-3643 A	2299 247
34R-4123-A	2495 961
34R-4124-A	2495 965
34R-4125-A	2495 967
34R-4126-A	2495 968
34-R-4171-A	2525 783
34-R-4178-A	2525 785
35-R-136-A	2196 242
35R-342-A	2196 234
35R-347A	2299 038
35R-453-A	2495 962
39-D-151	1843 426
42-D-198	1843 430
57-R-19-A	2196 243
57-R-35	2084 717
67-D-577-A	1843 424
76-D-184-AS	1818 706
85G-1088	2299 037
85R-110	2299 036
85-R-671	1881 930
85-R-672	1881 931
85-R-673	1881 932
85-R-674	1881 933
85-R-675	1881 934
85-R-676	1881 935
85-R-677	1881 936
85-R-916	2084 710
85-G-917	2084 711
85-R-949	2196 206
85-R-958	2196 245
85-G-959	2196 244
85-R-1502	2495 963
85-R-1503	2495 966
85-R-1531	2525 781
2541	2402 528
D-1353-3A	1792 719
D-1479-1A	1790 977
H-5-D-342	1818 693
H-27-D-29013	1818 692
H-29-D-585	1818 759
H-34-D-1744-A	1818 724
H-34-D-1749	1818 717
H-34-D-2157-A	1879 578
H-41-D-203-A	1818 714
H-53-D-29	1818 694
H-67-D-431-A	1818 697
H-71-D-76-A	1818 696
H-76-D-71-AS	1818 718
H-86-D-74-AS	1818 719
H-D-87-A(sup. by 71-D-90A	1843 428
R-1873-AS	2120 470
R-2052-AS	2128 413
R-2136 A	2268 320
R-2167 A	2268 327
R-2303 A	2268 322
R-2416 A	2268 321
R-2417 A	2268 323
R-2418 A	2268 324
R-2419 A	2268 325
R-2533 A	2402 501
R-2534 A	2402 502
R-2535 A	2402 503
R-2536 R	2402 504
R-2537 A	2402 505
R-2538 A	2402 506
R-2541	2402 528
R-2765 A	2463 835
R-2766 A	2463 836
R-2767 A	2463 837
R-2769 A	2463 839
R-2885-A	2468 245
R-2886-A	2468 246
R-2887-A	2468 247
R-2889-A	2468 249
R-3052-A	2532 568
R-3053-A	2468 756
R-3054-A	2468 757
R-3055-A	2468 758
R-3056-A	2468 759
R-3057-A	2468 760
R-3059-A	2468 762
R-3152-A	*2536 214
R-3271-A	2536 858
R-3272-A	2536 858
R-3273-A	2658 651
R-3274-A	2536 891
R-3275-A	2536 860
R-3276-A	2536 860
R-3277-A	2658 652
R-3278-A	2536 892
R-3279-A	2536 866
R-3280-A	2532 866
R-3281-A	2658 653
R-32828	2536 893

MyMopar.com

PRESTOLITE

VENDOR NUMBER	CHRYSLER NUMBER
4-GS-125	1594 767
4-GS-150	1540 373
4-GS-200	1555 285
4-S-165	1436 277
4-S-250	1565 337
6-12-33-51	1391 399
6-12-34-51	1391 398
8-12-6-45	1122 921
A-5	1406 647
A-7	1075 955
A-9	691 672
A-11	964 402
A-32A	1889 521
A-42B	1889 520
A-52B	1889 522
A-3897 K 427	1929 343
A-14908 A	1798 596
ADM-5	1889 295
AG-3 B	1889 712
AG-4	2095 755
AG-32	2095 675
AG-52	2095 289
AGR-2	1841 500
AGR-4 S	1553 043
AGR-8 S	1614 216
AGR-31	1648 989
AGR-32	1689 297
AGR-41	1658 910
AGR-42	1658 852
AGR-45	1553 043
AGR-51	1568 040
AGR-52	1689 073
AGR-82	1704 305
AGR-85	1614 216
AL-7	691 673
AL-EMG-3090R	1546 560
ALA-19	2525 343
ALA-20C	2525 338
ALC-21-D	2525 339
ALE-4	2525 331
ALE-1002-JS	2525 334
ALE-1012-DS	2525 342
ALE-2006-C	2525 333
ALE-2008-D	2525 332
ALK-5001-S	2444 437
CB-123	661 640
AR-5	1257 587
AR-5 S	1268 988
AR-6	1568 039
AR-8 A	1658 844
AR-8 S	1450 160
AR-10	1479 185
AR-31	1889 465
AR-32	1753 672
AR-41	1662 273
AR-42	1658 851
AR-51	1568 039
AR-52	1658 850
AR-80	1658 844
AR-82	1658 843
ARL-8	1265 760
AT-4	1262 988
AT-8	1262 986
ATR-42	2095 255
C-16-25	2084 108
C181-101	1826 583
CAC-4001	1595 023
CAE-4002	1627 412
CAF-4001	1843 324
CAG-33	1842 000
CAG-4001	1688 210
CAH-4001	1688 212
CAH-4001 SS	1843 324
CAJ-4001	1672 746
CAK-4001	1672 793
CAM-4001SS	1818 840
CB-1805	1390 260
CB-4014	628 902
CB-5777	1390 619
CB-6134	854 798
CB-13940	1122 887
CB-15238	1345 574
CB-17363	1390 624
CB-17379	1273 969
CB-17423	1390 625
CB-17435	1390 616
CB-17437	1273 353
CB-17443	1390 621
CB-17449	1390 009
CB-17766	1390 626
CB-17768	1390 026
CB-17770	1390 623
CB-18994	1390 622
CB-24778	1648 133
CE-308 A	1271 779
CE-1187 DQS	578 506
CE 1187 FNS	1191 544
CE-2260 AQS	868 587
CF-4013	924 053
CR-4004	1486 147
CT-4002	1394 885
CT-4004	1612 741
CW-11	1326 546
CW-2015 A	1326 553
CW-4001 T	1401 015
CW-4002	1672 746
CY-4002	1394 885
DA-22	674 927
DA-38	599 146
DA-39	674 928
DA-60	674 929
DA-60 A	1404 671
DA-132	1495 552
DD-44	960 170
DK-23 C	1253 343
DK-45	636 816
DO-561 AX	1318 994
DRC-3002-B	2084 875
EBA-2 A	1109 698
EBA-39	1473 219
EBA-79	1110 992
EBA-87	1134 138
EBA-1213	927 083
EBA-1225	927 084
EBA-2006	927 086
EBA-2007	1495 571
EBA-2008	927 088
EBA-2105	927 091
EBA-3307	1495 571
EBB-20	1473 219
EBB-20 A	2240 286
EBB-26 A	1532 984
EBB-32 A	1550 078
EBB-41	1633 182
EBB-53	1752 387
EBB-69	2084 438
EBB 70	1889 939
EBB-76	1889 938
EBB-79	2095 397
EBB-98	2098 472
EBB-832	1473 219
EC-41	1154 359
ED-15602	1842 522
EGGJ-2001 S	1501 791
EMA-4002	1627 166
EMB-4001	1627 146
EMD-47	1540 383
EMD-4003 B	1540 366
EMG-40	1527 831
EMG-106	1505 326
EMG-1087-L	1540 372
EMG-1087 R	1540 371
EMG-1109 L	1571 233
EMG-1110 R	1571 232
EMG-2006	1527 945
EMG-3100-R	1570 829
EMG-4102 B	1540 122
EMG-4105	1505 322
EMJ-2024	1818 503
EMJ-2026	1818 505
EMJ-4104	1648 342
EMK-4101	1540 123
EMK-4105	1509 627
EMM-4002	1603 324
EMP-40	1604 243
EMP-43 R	1594 973
EMP-62	1568 051
EMP-1053	1568 052
EMP-1063	1568 050
EMP-2065	1568 049
EMP-4101	1568 077

MyMopar.com

VENDOR NUMBER CROSS REFERENCE LIST

PRESTOLITE

VENDOR NUMBER	CHRYSLER NUMBER
EMU-1057	1604 023
EMU-1060	1626 946
EMU-1071 L	1622 012
EMU-1071 R	1622 011
EMU-1078 L	1658 486
EMU-1085	1622 435
EMU-1089	1622 436
EMU-2047	1879 341
EMU-4101	1622 403
EMZ-32	1642 029
EMZ-40	1594 992
EMZ-53	1594 995
EMZ-54	1594 993
EMZ-59	1752 662
EMZ-63	1605 068
EMZ-64	1605 605
EMZ-65	1605 607
EMZ-66	1605 602
EMZ-72	1605 606
EMZ-74	*1752 663
EMZ-1085	1605 524
EMZ-1089	1605 425
EMZ-2003	1752 664
EMZ-4001	1595 003
EOC-11930	1502 255
EOC-11931	1502 256
EOP-14576	1770 732
EPA-4001 S	1622 498
EPC-4001	1626 847
EPF-64	1658 351
EPF-67	1658 350
EPF-1005	1752 665
EPF-1070 R	1658 348
EPF-1070 L	1658 349
EPF-2002	1752 666
EPF-4001	1627 384
EPG-4001	1627 146
EPH-2006	1658 592
EPH-4101	1627 380
EPH-4102	1662 302
EPH-4103	1788 675
EPJ-4003	1642 434
EPJ-4102	1753 856
EPJ-4104	2093 842
EPK-28	1818 889
EPK-2048-B	1879 264
EPK-4201	1769 459
EPS-1005	1879 344
EPT-1063	1923 613
EPT-4005	1788 676
EPV-25	1818 806
EPV-26	1818 807
EPV-34	1818 808
EPV-49	1752 513
EPV-50	1769 565
EPV-64	1753 712
EPV-72	1753 711
EPV-75	1704 440
EPV-78	1818 809
EPV-94	1770 290
EPV-95	1770 289
EPV-123	1886 202
EPV-1005	1818 810
EPV-1032	2198 099
EPV-1033	2198 348
EPV-1034	2198 349
EPV-1058	1838 289
EPV-1060	1704 072
EPV-1062	1819 075
EPV-1066	2258 562
EPV-1070 L	1704 068
EPV-1070 R	1704 067
EPV-1071 L	1704 711
EPV-1071 R	1770 698
EPV-1076 L	1779 677
EPV-1076 R	1779 584
EPV-1079	1704 064
EPV-1080	1704 065
EPV-1117	1704 744
EPV-1120-L	1838 291
EPV-1120-R	1842 407
EPV-1121	1838 292
EPV-1124-L	1841 680
EPV-1124-R	1841 679
EPV-1140 L	2258 457
EPV-2002	1818 811
EPV-2003	1818 812
EPV-2006	1818 813
EPV-4001	1770 336
EPV-4001 A	1770 337
EPV-4001 C	1779 860
EPV-4001 D	1838 932
EPV-4001 E	1842 408
EPV-4001 F	1886 123
EPV-4001 G	1842 964
EPV-4001-J	2507 128
EPV-4003	2275 594
EPV-4006	2495 200
EPW-1040	2507 123
EPW-1040-A	2507 127
EPW-1005	1818 876
EPW-1060	1770 870
EPW-1064	2258 552
EPW-1070 L	1704 743
EPW-1070 R	1770 707
EPW-1074	1838 293
EPW-1091-R	1838 934
EPW-1096	2076 355
EPW-1098	1937 168
EPW-1100-L	2258 458
EPW-2002	1818 877
EPW-2002 A	1879 342
EPW-2006	1818 878
EPW-2041	2507 131
EPW-4001	1770 882
EPW-4001 B	1879 582
EPW-4001-C	1879 583
EPW-4002	2084 884
EPW-4003	2240 531
EPW-4004	2275 595
EPW-4009	2421 479
EPW-4010	2525 270
EPW-4011	2507 124
EPX-53	1753 174
EPZ-4001	1753 234
EPZ-4004	2093 843
EPZ-4101	1753 870
EPZ-4201	2084 444
ERA-4001	1779 055
ERC-2005	1879 416
ERF-4002	2094 107
ERK-4001	2084 445
ERK-4002	2084 446
ERK-4004	2299 804
ERL-4001	2196 343
ERQ-64	1930 183
ERQ-1060	1930 164
ERQ-1061	1930 188
ERQ-1062	1930 174
ERQ-1073	2231 021
ERQ-4001	2084 884
ERQ-4002	2225 575
ERQ-4005	2421 478
ERQ-4006	2525 269
ERZ-4001	2448 639
ESZ-4004	2448 640
ESZ-4005	2299 805
ETC-4001	2448 844
EW-103	837 999
EWD-62	1273 472
EWD-115	837 999
EWF-12	1495 533
EWG-20 A	1843 157
EWJ-43 L	1262 345
EWJ-43 R	1262 346
EWJ-64	1390 521
EWJ-91	1194 585
EWJ-132	1233 531
EWJ-142	1272 410
EWJ-1090	1194 581
EWJ-1097 R	1310 543
EWJ-1117	1310 656
EWJ-1120 L	1310 654
EWJ-1120 R	1310 661
EWJ-1141 L	1370 210
EWJ-1141 R	1370 209
EWJ-1158	1495 605
EWJ-1162 RA	1540 371
EWJ-1167	1540 145
EWJ-2056	1262 366
EWJ-2072	1540 475

MyMopar.com

PRESTOLITE

VENDOR NUMBER	CHRYSLER NUMBER
EWJ-2143	1390 519
EWJ-2154	1495 606
EWJ-4002	1261 036
EWJ-4007 A	1436 660
EWJ-4011	1272 340
EWK-43	1265 717
EWK-74	1660 965
EWK-100	1261 446
EWK-100 A	1261 447
EWK-1015	1261 454
EWK-1085	1263 468
EWK-1090	1263 469
EWK-2006	1265 731
EWK-2071	1265 732
EWK-2072	1265 736
EWK-4101	1261 499
EWK-4102	1261 498
EWM-2006	1308 472
EWM-4001	1300 526
EWO-4001	1343 472
EWR-42	1473 608
EWR-43	1540 105
EWR-43 R	1540 104
EWR-1026 A	1439 662
EWR-1026 B	1473 111
EWR-1071	1436 242
EWR-1072	1370 004
EWR-1099 L	1370 023
EWR-1099 R	1370 022
EWR-1100 L	1383 507
EWR-1100 R	1383 506
EWR-2082	1495 353
EWR-2096-AS	1479 947
EWR-2096 S	1479 946
EWR-2097-S	1479 948
EWV-4001	1383 349
EWW-4001	1436 729
EWW-4002	1605 068
EWY-1085 F	1540 466
EWY-1085 G	1540 522
EWY-1085 H	1540 524
EWY-1097 LA	1540 150
EWY-1097 RA	1540 149
EWY-1098 LA	1540 369
EWY-1098 RA	1540 368
EWY-1116-D	1540 465
EWY-1116 F	1540 520
EWY-1116 G	1540 523
EWY-1117 C	1540 521
EWY-4001	1495 163
EWY-4004	1495 163
EX-88454	1343 488
EXH-119705	1769 891
EXP-53	1753 174
F5-3276-P-16	1934 350
FA-31 S	1313 837
FB-4002 S	1637 367
GAA-35 A	1273 382
GAG-138	927 946
GAL-44	636 779
GAL-298	659 739
GAM-34-A	1135 618
GAR-A	1110 959
GAR-63	636 812
GAR-73	636 796
GAR-75	636 797
GAR-95	648 359
GAR-171	648 392
GAR-221 A	1273 438
GBF-55	599 148
GBG-18-R	924 105
GBG-23	599 152
GBG-24-B	916 585
GBG-24 M	1405 151
GBG-26	599 154
GBG-30	599 156
GBG-38	599 158
GBG-40	924 107
GBG-46	599 161
GBG-47	599 162
GBG-48	599 163
GBG-49	599 164
GBG-49 C	1405 143
GBG-51	599 166
GBG-56 D	1405 149
GBG-57	599 170
GBG-57 B	1405 147
GBG-66	916 571
GBG-66 B	1405 137
GBG-85	599 173
GBG-560	1405 149
GBG-1056	599 186
GBG-1056 F	1405 148
GBJ-25	674 931
GBM-21-C	1404 661
GBM-124	1253 362
GBM-128-A	1402 569
GBM-2012 AS	689 929
GBM-2065 F	671 474
GBW-34	671 481
GBW-45	671 490
GBW-45 A	1110 952
GBW-66	688 015
GBW-69	695 627
GBW-72	695 628
GBW-72-A	1110 949
GBW-73	695 629
GBW-1024 N	1138 490
GBW-2012 CS	1550 087
GBW-2052 FM	1112 913
GBY-28	960 171
GBY-34 C	1405 142
GBY-38 A	674 919
GCD-24	1136 568
GCD-79	960 165
GCD-2012 S	960 544
GCE-24	674 944
GCE-24-P	1550 096
GCE-27	671 486
GCE-40	916 572
GCE-40 B	1405 138
GCE-53	674 935
GCE-2002 S	1262 932
GCJ-2006-F	673 015
GCP-2052 FM	1138 489
GCP-2105 FM	1531 572
GCT-25	683 358
GCY-25	683 357
GCY-28	599 177
GCY-28-A	1135 605
GDF-2012-S	689 930
GDJ-23 B	1405 139
GDJ-27	916 575
GDJ-63 D	1404 672
GDJ-66	916 564
GDJ-67	916 565
GDJ-68	928 581
GDJ-73 B	1405 150
GDJ-1073	919 871
GDJ-1073 B	1405 146
GDJ-1973 B	1405 146
GDJ-2012 CS	1502 235
GDJ-2062 FT	1405 144
GDJ-2065 F	916 581
GDJ-2074 BS	1405 141
GDJ-4808	918 720
GDW-22	1483 974
GDW-23-A	1483 976
GDW-44	1138 481
GDZ-28	1402 550
GDZ-1002 A	860 491
GDZ-1003	860 492
GDZ-1007	858 270
GDZ-1007 A	1135 607
GDZ-1008	858 271
GDZ-1008 B	1323 951
GDZ-1064 A	1320 488
GDZ-1085	1112 914
GDZ-2002 S	1267 815
GDZ-2006 F	859 900
GDZ-2057 F	596 888
GDZ-2094 AS	1320 486
GDZ-4801 S1	853 770
GDZ-4802 S1	595 316
GDZ-4820 M	1123 539
GDZ-4822 S1	1138 509
GE-48	661 647
GEA-27	859 897
GEA-30 G	1483 992
GEA-34	859 899
GEB-27	958 354

MyMopar.com

VENDOR NUMBER CROSS REFERENCE LIST

PRESTOLITE

VENDOR NUMBER	CHRYSLER NUMBER
GEB-29	916 588
GEB-2006 F	860 922
GEB-6001 S-1	1194 650
GEE-27	1752 647
GEF-1008 C	1138 483
GEF-2006 F	2084 290
GEF-4901 M	E-71 260-M
GEF-4902 M	E-71 261-M
GEF-4903 M	1323 917
GEF-4904 M	1323 918
GEF-5003	1889 606
GEG-55	1345 348
GEW-31	120 396
GEW-1003	594 372
GFL-27	1135 610
GFM-18 A	131 954
GFR-56 A	1405 145
GFY-1007 A	1253 329
GFY-1008 A	1253 331
GFY-2093 F	1689 799
GFY-2101 F	1391 249
GFY-2107 F	1689 780
GFY-2108 F	1689 801
GG-164	636 815
GGA-20	1253 327
GGA-70	1253 336
GGA-1005 A	1391 246
GGA-1055	1769 460
GGA-1068	1253 338
GGA-1084	1571 464
GGA-1086	1818 749
GGA-2102 S	1689 779
GGA-6003 S1	1658 861
GGA-6005 S1	1662 147
GGA-6007-S1	1770 739
GGA-6008 S1	1661 773
GGA-6009-N-S1	1663 097
GGA-6010 S1	1658 865
GGE-1003	1112 915
GGE-1004 A	1112 920
GGE-4804 M	E-71 258-M
GGE-4805 M	E-71 259-M
GGE-4807 M	1311 471
GGF-9	1266 520
GGF-13	1266 524
GGJ-31	1384 053
GGJ-2012 S	1253 341
GGJ-2021 S	1501 791
GGJ-2101 AF	1627 214
GGJ-2101-F	1253 337
GGJ-2103 F	1384 049
GGJ-2104 F	1473 063
GGJ-2107 F	1627 248
GGJ-6001 S1	1136 931
GGJ-6002 S1	1263 554
GGJ-6004 S1	1440 393
GGJ-6005 S1	1540 429
GGJ-6007 S1	1390 077
GGJ-6008 S1	1604 843
GGU-33	1253 355
GGU-38A	1402 563
GGU-40 A	1818 775
GGU-41	1253 357
GGU-1002 A	1253 358
GGU-1003	1253 361
GGU-1003 D	1879 569
GGU-1007	1253 351
GGU-1007 A	1483 977
GGU-1008	1253 352
GGU-1008 A	1483 978
GGU-1045	1269 227
GGU-1064 A	1889 351
GGU-1065	1527 960
GGU-2002 S	1495 542
GGU-2006 F	1253 360
GGU-2012 AS	1402 588
GGU-2012 S	1253 367
GGU-2042 F	1495 573
GGU-2046 F	1268 226
GGU-2048 S	1473 057
GGU-2054 F	1473 060
GGU-2059-F	1495 554
GGU-2060-S	1495 553
GGU-2070 S	1605 558
GGU-2071 F	1605 559
GGU-6001 S1	1136 934
GGU-6002 S1	1262 334
GGU-6004 S1	1440 394
GGU-6005 S1	1479 730
GGU-6006 S1	1495 199
GGU-6012-S1	1507 928
GGW-31	1266 525
GGW-40	1271 164
GGW-52	1269 238
GGW-71	120 392
GGW-83	1610 386
GGW-87	1552 859
GGW-88	1552 885
GGW-1003	1266 500
GGW-1005 J	2098 079
GGW-1007	1266 527
GGW-1008	1266 493
GGW-1024	1266 502
GGW-1031	1266 519
GGW-1078	1527 938
GGW-1082	1527 968
GGW-2002 AS	1402 559
GGW-2002 S	1384 081
GGW-2006 F	1266 499
GGW-2006 FT	1402 565
GGW-2012 S	1605 565
GGW-2032 F	1266 526
GGW-2039-S	1473 061
GGW-2045 F	1479 690
GGW-2046 F	1505 843
GGW-2047 S	1505 842
GGW-2079 S	1507 941
GGW-2089 S	1605 566
GGW-2090 F	1605 568
GGW-2098 F	1605 563
GGW-6001 AT	1330 240
GGW-6001 S-1	1257 392
GGW-6001 SN	1257 392
GGW-6001 T-S1	1330 241
GGW-6002 S1	1263 971
GGW-6004 T-S1	1326 562
GGW-6005	1479 730
GGW-6005-T-S1	1401 004
GGW-6008-S1	1479 175
GGW-6011 S1	1504 760
GGW-6012 S1	1540 596
GGW-6013 S1	1505 824
GGW-6014-S1	1540 820
GGW-6016 S1	1604 825
GGW-6019 S1	1550 577
GGY-45	1345 517
GGY-45 A	1402 564
GGY-2012 S	1402 500
GGY-2012 BS	1661 748
GGY-2017 BS	1610 378
GGY-3080 S	1610 383
GGY-3080 BS	1692 763
GGZ-1064 A	1889 351
GGZ-2006 F	1268 129
GGZ-2046 F	1507 942
GGZ-6001 M-S1	1321 751
GGZ-6001-S1	1264 054
GGZ-6002-S1	1506 324
GHA-15	1273 439
GHA-35	1273 446
GHA-36	1273 447
GHA-37	1273 444
GHA-38	1273 432
GHA-39	1273 448
GHA-40	1273 449
GHA-41	1273 450
GHA-42	1273 451
GHA-47 S	1394 888
GHA-53	1273 454
GHA-1004 S	1273 437
GHA-1044	1273 455
GHA-1052	1273 440
GHA-2006 FT	1273 445
GHA-2012 S	1273 441
GHA-4802 UT	1268 963
GHB-1003	1879 495
GHB-2006 F	1402 501
GHB-2046 F	1879 494
GHB-4801 S1	1323 901
GHB-4802 S1	1842 609
GHC-1007	1402 493

MyMopar.com

PRESTOLITE

VENDOR NUMBER	CHRYSLER NUMBER
GHC-1008	1402 494
GHC-6003 S1	1610 368
GHC-6004 T-S1	1612 704
GHF-1007	1483 986
GHF-1007 A	1499 171
GHF-1008	1483 987
GHF-1008 A	1499 172
GHF-2006 F	1818 560
GHF-2006 AFT	1555 268
GHF-3006 FM	1483 989
GHF-6001 M-S1	1321 752
GHG-2048-F	2084 846
GHG-2048 FM	1612 734
GHM-1003 A	1889 349
GHM-2006 F	1752 520
GHM-2034 F	1879 568
GHM-2042 F	1499 173
GHM-2045 F	1889 350
GHM-2046 F	1752 408
GHM-2059 F	1752 289
GHM-2071 F	1605 561
GHM-2074 F	1843 209
GHM-6001	1770 747
GHM-6001 S1	1753 624
GHM-6003-SN1	1704 272
GHM-6007-S1	1704 267
GHM-6008-S1	1787 869
GHM-6010 S1	*1770 747
GHM-6011 S1	1779 960
GHM-6012 S1	1787 869
GHM-6013 S1	1787 870
GHM-6015 S1	1704 265
GHM-8001-S1	1842 785
GHM-8002 S1	1842 773
GHM-8004 S1	1842 776
GHM-8005 S1	1842 779
GHM-8006-S1	1842 791
GHP-2001 S	1555 264
GHP-2002 AS	1818 559
GHP-6001-T-S1	1486 144
GHP-6002 T-S1	1532 976
GHR-20	1818 824
GHR-20 B	2084 289
GHR-1003	1610 380
GHR-1003 B	2084 293
GHR-1003 C	2275 561
GHR-1005	1610 377
GHR-2006 FM	1630 647
GHR-2081	1630 645
GHR-4801 M	1535 579
GHR-4801 NM	1616 642
GHR-4802 M	1535 591
GHR-4802 NM	1616 643
GHU-2006 FM	1610 379
GHU-4801 M	1553 022
GHU-4801 NM	1616 645
GHU-4802 M	1553 023
GHU-4802 NM	1616 644
GHW-1005	1612 726
GHW-1005 B	2084 298
GHW-2002 S	2084 292
GHW-2006 AF	2084 299
GHW-2006 FM	1612 729
GHW-3017 S	2084 300
GHW-4801-M	1553 025
GHW-4802-M	1553 026
GHW-4809	1889 481
GHW-4810	1889 483
GHX-4801-M	1550 609
GHX-4802 M	1550 610
GHX-4803	1889 827
GHX-4804	1889 829
GJ-20	1300 503
GJ-20 C	2084 659
GJC-19	1658 529
GJC-38 A	2084 265
GJC-39	1752 692
GJC-41	1627 278
GJC-50	1658 597
GJC-1003	2240 512
GJC-1003-B	2240 511
GJC-1003-C	2240 298
GJC-1005	1568 078
GJC-1005-A	1658 520
GJC-1007 A	1752 645
GJC-1008 A	1752 646
GJC-1019	2196 328
GJC-1031 A	2196 329
GJC-1031-C	2240 299
GJC-1050	2084 855
GJC-1057 A	1889 385
GJC-1061	2084 264
GJC-1061 A	2275 570
GJC-1078	2240 513
GJC-1111 A	1889 234
GJC-1111 B	2084 852
GJC-1111 C	2240 293
GJC-1112	1843 161
GJC-1112 A	2196 326
GJC-2001 C	2240 290
GJC-2002	1658 522
GJC-2002 A	2084 861
GJC-2002 B	2240 292
GJC-2012 AS	1843 156
GJC-2012 BS	2084 291
GJC-2030 F	1658 523
GJC-2030 FT	2240 291
GJC-2032 F	1568 079
GJC-2044	1658 526
GJC-2047 F	1661 749
GJC-2048 F	1662 175
GJC-2055 F	1689 793
GJC-2056 F	1689 803
GJC-2058 F	1879 571
GJC-2059 F	1889 353
GJC-2060	2084 263
GJC-2090 F	1658 608
GJC-2098 F	1658 617
GJC-6002-S1	1565 827
GJC-6003-S1	1568 355
GJC-7002-S1	1770 755
GJC-7003-S1	1642 005
GJC-7005-S1	1787 871
GJC-7006-S1	1642 009
GJC-7009-S1	1569 860
GJC-7010-S1	1662 153
GJC-7012 S1	1770 755
GJC-7013 S1	*1779 945
GJC-7014 S1	1787 871
GJC-7017 S1	1941 108
GJC-7401-T-S1	2095 498
GJC-8001 S1	1842 771
GJM-1005	1889 352
GJM-1005 C	2084 860
GJM-7003 S1	1920 845
GJM-7401 S1	2095 290
GJM-7402 S1	2095 280
GJM-7403-S1	2095 326
GJM-7404 SI	2098 908
GJM-8001 S1	1842 800
GJM-8201 S1	2095 070
GJM-8202 S1	2095 072
GJM-8203 S1	2095 417
GJO-1045	2298 785
GJO-2002	2275 569
GJP-2044	2240 251
GJS-2002 A	2275 560
GJU-1049	2298 786
GJU-2056 F	2298 784
GJU-2063 F	2275 562
GJU-3030 F	2275 568
GJU-3063 F	2275 559
GJU-7501	2095 365
GJU-7502	2095 364
GJU-7503 S1	2095 633
GJU-7505 SI	2095 826
GK-20 A	673 009
GK-20 C	1404 560
GK-38	859 901
GK-215	120 395
GTC-1112	1843 161
GY-20 C	1689 907
H-11133	1232 664
HA-4029	866 103
HA-4032	1089 619
HA-4035	1188 465
HA-4101	1565 848
HAB-4028	1622 476
HAB-4603	1540 264
HAB-4604	1540 263
HAB-4617	1523 540

MyMopar.com

VENDOR NUMBER CROSS REFERENCE LIST

PRESTOLITE

VENDOR NUMBER	CHRYSLER NUMBER
HAD-48-L	1842 721
HAD-48-R	1842 720
HAD-79-L	1971 363
HAD-79-R	1971 362
HAD-81-L	1971 429
HAD-81-R	1971 428
HAD-82	1972 461
HAD-101	2197 874
HAD-102	2197 871
HAD-105	2197 876
HAD-106-R	2209 114
HAD-117	2258 517
HAD-120	2291 118
HAD-1028	1838 278
HAD-1032 L	1779 474
HAD-1032 R	1779 473
HAD-1033 L	1753 101
HAD-1033 R	1753 100
HAD-1067	1790 918
HAD-2042	1753 059
HAD-4027	1622 484
HAD-4627	1627 303
HAD-4628	1627 302
HAD-4729	1660 936
HAD-4733	1658 822
HAD-4734	1658 821
HAD-4901	1664 986
HAD-4906	2421 489
HAE-4151	1753 001
HAE 4301 B	2197 125
HAE-4523 AA	1627 303
HAE-4523 BB	1627 302
HAF-4001	1622 475
HAF-4516 BB	1523 541
HAF-4523 AA	1605 186
HAF-4523 BB	1605 185
HD-4102	1565 842
HR-43	652 398
HRM-4002	1538 314
HRM-4102	1113 084
HRM-4104	1594 487
HRS-4001	1120 526
HRT-4001 A	1479 522
HRU-4001	1343 488
HRV-4001	1370 235
HRW-4001 A	1440 445
HRZ-4001 L	1495 223
HRZ-4001 R	1495 222
HRZ-4002	1473 791
HW-38	1566 087
HX-4003 UT	1268 969
IAD-8	1089 089
IAD-10	1089 090
IAD-12	1089 089
IAD-1014 M	1483 967
IAD-1100 RH	1089 081
IAD-2004	1089 082
IAD-2004 B	1134 140
IAD-2015	1089 085
IAD-4039-1	930 366
IAD-4040-1	1109 760
IAE-4001 M	1075 920
IAK-8	696 043
IAK-4002-1 M	1119 565
IAL-4001 1M	1123 056
IAL-4004 1M	1119 564
IAO-10	1195 769
IAO-11	1195 770
IAO-13	1345 583
IAO-17	1267 367
IAO-17 M	1323 924
IAO-1003	1235 421
IAO-2004	1195 774
IAO-2004 M	1323 925
IAO-4109-1 M	1321 787
IAO-4110-1 M	1323 899
IAO-4112-1 M	1326 533
IAO-4113-1 M	1326 532
IAO-4114-1 M	1321 788
IOA-4115-1 M	1321 789
IAO-4116-1	1193 314
IAO-4116 A-1	1265 811
IAP-9	1269 181
IAP-3004 R	1261 008
IAR-8	1244 738
IAR-1003	1126 570
IAT-6	1343 585
IAT-7	1343 591
IAT-14	1343 583
IAT-24 R	1343 582
IAT-30	1383 641
IAT-51	1495 568
IAT-52	1495 565
IAT-81 RD	1879 348
IAT-81 RE	2084 865
IAT-81 RF	2240 254
IAT-81 RG	2448 252
IAT-81 RH	2240 539
IAT-81 RK	2275 581
IAT-1033	1343 576
IAT-1033 A	2084 677
IAT-2004 RA	1343 578
IAT-2004 RD	1752 397
IAT-2023 RG	1343 590
IAT-2050 RC	1692 793
IAT-3076 JS	2279 949
IAT-3076-NS	2240 500
IAT-3076 SS-2	1881 723
IAT-4012	1479 588
IAU-12	1391 940
IAU-1016 A	1343 587
IAU-1065-B	2240 501
IAU-1066	1390 137
IAU-2058	1271 760
IAU-2058 S	1500 968
IAU-3076 AS	2196 327
IAU-3076 L	1271 766
IAU-4005 UT	1268 976
IAU-4007 UT	1391 376
IAU-4016 UT	1633 145
IAU-4017 UT	1550 585
IAU-4018 UT	1550 584
IAW-24	1401 009
IAX-2046 M	1323 946
IAX-4004-1 M	1323 933
IAX-4005-1 M	1321 786
IAY-7	1274 087
IAY-8	1274 088
IAY-9	1274 089
IAY-1004	1274 090
IAY-2019	1818 672
IAY-2019 A	1818 816
IAY-2019 B	1818 780
IAY-2019-E	2084 864
IAY-4003-1	1274 066
IAY-4003 B-1	1507 456
IAY-4004-1	1274 116
IAY-4004 C-1	1788 688
IAY-4101-1	1788 688
IAY-4102-A-1S	2084 844
IAY-4104-1	1788 688
IAZ-10	1383 958
IAZ-31	1479 105
IAZ-1002 R	1383 947
IAZ-1002 RB	1752 328
IAZ-1002 RC	1818 563
IAZ-1002 RD	1843 040
IAZ-1004 RA	1689 784
IAZ-1021-LB	1879 312
IAZ-1021-LF	2584 893
IAZ-1021 LG	2448 805
IAZ-1021-LH	2584 894
IAZ-1021 R	1439 670
IAZ-1021 RC	1479 529
IAZ-1021 RD	1505 930
IAZ-1021 RE	1571 398
IAZ-1021 RG	1509 676
IAZ-1021-RH	1660 504
IAZ-1021 RP	1627 261
IAZ-1025 RA	1818 641
IAZ-1025 RB	1843 038
IAZ-1026 R	1473 687
IAZ-1026 RA	1505 931
IAZ-1026 RB	1818 574
IAZ-1026 RC	1843 033
IAZ-1028 R	1818 820
IAZ-1036 L	1843 376
IAZ-1036 LA	1879 313
IAZ-1036-LC	2525 648
IAZ-1037 L	1879 392
IAZ-1038 R	1879 390

MyMopar.com

PRESTOLITE

VENDOR NUMBER	CHRYSLER NUMBER
IAZ-1039 LC	2448 251
IAZ-1047 L	2448 296
IAZ-1048 L	2448 289
IAZ-2004 R	1658 610
IAZ-2004 RB	1658 610
IAZ-2023 RA	1439 671
IAZ-2023 RB	1627 234
IAZ-2023 RC	1627 262
IAZ-2023 RD	1658 620
IAZ-2023 RE	1689 773
IAZ-2023 RF	1689 765
IAZ-2040 L	2084 639
IAZ-2040 LB	2421 849
IAZ-2040-LD	2421 173
IAZ-2040 LS	2084 080
IAZ-2040 R	2084 077
IAZ-2040 RS	2084 076
IAZ-4001 A	1479 139
IAZ-4001 B	1479 139
IAZ-4001 C	1540 552
IAZ-4001 E	1626 661
IAZ-4001 F	1641 707
IAZ-4001 G	1658 989
IAZ-4002	1383 290
IAZ-4002 B	1595 305
IAZ-4002 C	1626 658
IAZ-4002 D	1626 659
IAZ-4003	1383 757
IAZ-4003 A	1540 809
IAZ-4003 C	1626 656
IAZ-4003 D	1641 956
IAZ-4003 F	1641 956
IAZ-4003 G	1641 740
IAZ-4003 H	1658 870
IB-654 S	1879 282
IBB-2014 M	1558 133
IBB-2040 D	1663 133
IBB-2040 F	2441 848
IBB-2040-G	2525 640
IBB-2040 M	1532 968
IBB-2042-SS-2	1818 757
IBB-4001 A-1M	1321 761
IBB-4101-1M	1486 190
IBB-4101-B-1	1616 631
IBB-4102-1	1402 600
IBB-4102 A-1M	1402 503
IBB-4103 A	1501 786
IBB-4103-C	1566 658
IBB-4105 A	1612 742
IBB-4105 B	1634 193
IBB-4106 A-1	1507 047
IBB-4107-1	1555 284
IBB-4108	1507 048
IBB-4202-AS	2444 335
IBB-4202 S	2098 725
IBC-1035	1486 159
IBC-4018 UT	1550 590
IBC-4019 UT	1551 878
IBC-4021 UT	1633 140
IBC-4024 UT	1633 140
IBD-4008-BUT	1633 144
IBD-4008 UT	1555 289
IBD-4009 UT	1555 288
IBD-4014 UT	1633 141
IBE-1001	1401 001
IBF-27	1530 735
IBF-1002 L	2240 503
IBF-1003	1530 737
IBF-1004-L	2240 505
IBF 1033A	2240 502
IBF-1066	1530 739
IBF-2001-C	2240 506
IBF-4001 AUT	1633 157
IBF-4001-UT	1409 647
IBF-4002 BUT	1634 224
IBF-4002 CUT	1612 723
IBF-4002-UT	1614 217
IBF-4004-UT	1889 286
IBG-4001 UT	1558 149
IBH-4001 UT	1610 349
IBJ-8	1658 538
IBJ-24	1658 602
IBJ-1021-LE	2240 507
IBJ-1021 RN	1752 235
IBJ-1021 RU	1818 769
IBJ-1048 R	1658 603
IBJ-2048 R	1658 601
IBJ-4301	1642 387
IBJ-4301 A	1688 647
IBJ-4301 B	1688 649
IBJ-4302 C	1704 261
IBJ-4302 D	1704 262
IBJ-4303	1648 685
IBJ-4303 C	1704 260
IBK-388 CS	2084 866
IBK-1003	1658 534
IBK-1003 B	2084 654
IBK-1003 D	2098 852
IBK-1016	1658 535
IBK-1027 R	1818 665
IBK-2001 B	1818 668
IBK-4101 F	1643 392
IBK-4103 G	1642 387
IBK-4301 A	1642 392
IBK-4301 C	1704 309
IBK-4302	1704 310
IBK-4304	1689 325
IBM-1040	1663 128
IBM-2004 RA	1843 476
IBM-2004 RC	2240 252
IBM-2040	1663 126
IBM-2041 A	1843 368
IBM-4001	1663 025
IBM-4001 B	1664 956
IBM-4101	1785 139
IBM-4101 A	1792 703
IBM-4101 B	1793 772
IBM-4102	1787 878
IBM-4104	1787 055
IBM-4106 S	1889 891
IBM-4108	1889 370
IBM-4108 A	2098 085
IBM-4109	2095 900
IBO-4001 A-1	1664 970
IBO-4002-1	1663 189
IBO-4003	1665 020
IBP-17	1818 566
IBP-17 A	1818 660
IBP-17 B	1818 730
IBP-361 BS	1889 496
IBP-2004 RB	1843 482
IBP 2004-RD	2525 265
IBP-2004 RS	1818 567
IBP-2023 LB	2084 085
IBP-2023 RA	*1818 652
IBP-2023 RC	1818 642
IBP-2040 L	2084 079
IBP-2040-LA	2421 176
IBP-2040 R	2084 078
IBP-2040 RA	2421 177
IBP-2041 B	2275 580
IBP-2209 LA	1889 396
IBP-2209 R	1818 575
IBP-2209-RG	1818 646
IBP-2209 RH	1818 772
IBP-3028 AS	1818 568
IBP-3028 BS	1843 370
IBP-4001	1689 320
IBP-4001 A	1779 943
IBP-4002	1689 319
IBP-4002 A	1770 750
IBP-4002 B	1779 940
IBP-4002 C	1788 638
IBP-4002 D	1779 952
IBP-4002 E	1841 511
IBP-4002 F	1841 514
IBP-4002 H	1798 640
IBP-4002 J	1922 670
IBP-4003	1689 318
IBP-4003 A	1779 938
IBP-4003 C	1779 951
IBP-4003 E	1842 602
IBP-4003 J	1889 305
IBP-4003-LS	2196 320
IBP-4003 N	1889 560
IBP-4003 PS	2084 843
IBP-4003-T	2095 199
IBP-4003-ZS	2444 371
IBP-4005	1779 950
IBP-4005 B	1842 803
IBP-4005-C	1889 562

MyMopar.com

VENDOR NUMBER CROSS REFERENCE LIST

PRESTOLITE

VENDOR NUMBER	CHRYSLER NUMBER
IBP-4005-D	2095 054
IBP-4005 E	2095 679
IBP-4006	*1842 804
IBP-4006-B	1889 851
IBP 4006 C	1889 564
IBP-4006 D	1889 485
IBP-4006 F	2095 795
IBP-4008 BS	2095 802
IBP-4008 CS	2095 799
IBP-4008 ES	2098 789
IBR-1009	2098 765
IBR 2050 RA	1818 825
IBR 2050 RC	2240 538
IBR 2050 RD	2421 193
IBR-4001-AS	2084 841
IBR 4002 BS	2098 324
IBS-2004 LA	1843 337
IBS-2004 LC	2299 321
IBS-2004-LF	2525 638
IBS-2004 R	1752 628
IBS-2004 RA	1843 488
IBS-4003	1779 937
IBS-4004	1779 941
IBS-4005 A	1841 518
IBS-4006 B	1779 983
IBS-4006 C	1842 810
IBS-4006-D	1889 570
IBS-4006-E	2095 065
IBS-4006 F	2095 680
IBS 4006 G	2095 832
IBS-4006-JS	2444 360
IBS-4006-KS	2444 703
IBS-4006-LS	2444 704
IBS-4007	1838 822
IBS-4007 A	1841 515
IBS-4008	1841 498
IBS-4009	1841 417
IBS-4010	1842 811
IBS-4010 A	1842 805
IBS 4010 B	2095 841
IBS-4011	1889 568
IBS 4011 AS	2098 495
IBS-4011 BS	2098 726
IBS-4011-CS	2444 363
IBS-4011-DS	2444 366
IBS-4011-ES	2444 333
IBS-4011-HS	2444 653
IBT-14-F	2525 639
IBT-40-S	1530 741
IDM-2040 A	2275 563
IG-88	1126 640
IG-90	643 892
IG-514	643 896
IG-636 HS	852 026
IG-636 MS	1627 237
IG-636 NS	959 310
IG-636 QS	1067 297
IG-636 XS	1473 689
IG-636 YS	1752 236
IG-637 AS	2084 681
IG-644 A	1530 741
IG-654 S	1879 282
IG-694 A	1109 790
IG-776 AS	1818 669
IG-784 S	1689 772
IG-863 AS	1818 644
IG-884 CS	1879 292
IG-884 DS	1879 310
IG-1456	643 917
IGB-199	643 904
IGB-208 CS	1308 243
IGB-208 DS	1889 548
IGB-234 S	2240 253
IGB-266 BS	1843 379
IGB-278 CS	2084 887
IGB-281 S	2275 201
IGB-292 SS	674 959
IGB-316 BS	2084 657
IGB-327 S	2448 634
IGB-329 S	1527 980
IGB-336-CS	1571 399
IGB-336 DS	2084 679
IGB-342 CS	1889 608
IGB-346-AS	1627 235
IGB-348-AS	1627 243
IGB-349 BS	2084 087
IGB-353 BS	1308 182
IGB-361 CS	2084 678
IGB-369 AS	1889 519
IGB-374 AS	1843 155
IGB-374 BS	1879 320
IGB-374 CS	1879 321
IGB-374-DS	1879 323
IGB-376 AS	1818 822
IGB-379 BS	1879 308
IGB-379 DS	2084 889
IGB-381 BS	2275 227
IGB-381-CS	2525 668
IGB-385 AS	1818 667
IGB-386 S	1818 736
IGB-388-DS	2525 266
IGB-388-ES	2084 866
IGB-411-S	2448 288
IGB-2023 RB	1627 234
IGC-42 S	2448 250
IGC-117	648 030
IGC-154 AS	1658 622
IGC-154-BS	1818 684
IGC-154-CS	1889 538
IGC-175 B	1473 688
IGC-198 AS	1879 287
IGC-198 S	1614 913
IGC-200 AS	1692 795
IGC-200 BS	1818 654
IGC-207-CS	2084 856
IGC-214 S	2084 301
IGC-1107 S	643 822
IGC-1123 C	1136 522
IGC-1124-B	1136 523
IGC-2148 A	592 475
IGC-2148 G	1136 533
IGC-2168 R	1271 768
IGC-4510-1 M	1124 876
IGC-4511-1 M	1124 874
IGC-4517-1	1261 411
IGC-4517 A-1	1266 945
IGC-4518 A-1	1509 668
IGE-29 AS	1818 571
IGE-29 BS	1818 576
IGH-28	643 899
IGH-1041	1136 550
IGL-8A	1407 579
IGL-9 A	1369 774
IGP-30	643 912
IGP-1003	641 033
IGP-1016 B	868 096
IGP-2004 B	674 963
IGP-3028 ES	699 291
IGP-4402 B	1071 821
IGP-4507-1 M	1125 894
IGS-17	643 901
IGS-19 S	643 903
IGS-99	859 903
IGS-104	860 939
IGS-114	866 069
IGS-148	1135 588
IGS-181	1261 010
IGS-226	2240 287
IGS-796 S	1527 968
IGS-1016 B	868 095
IGS-1082 RS	1311 454
IGS-1092 RS	1253 292
IGS-1100 R	859 904
IGS-1100 RA	859 907
IGS-1100-RAD	1136 535
IGS-1100 RAJ	1343 588
IGS-1100 RA-5	1568 076
IGS-1100 RQ	1135 596
IGS-1100 RW	959 316
IGS-1100 RX	921 275
IGS-1112 R	953 715
IGS-1112-RD	1436 974
IGS-1112 RE	1390 543
IGS-1112 RK	1818 778
IGS-1113 R	599 633
IGS-1113 RD	1436 975
IGS-1113 RE	1390 532
IGS-1113-R6	1391 199
IGS-1145 RA	1509 678
IGS-2224 L	2084 074
IGS-2224-LB	2421 178

MyMopar.com

PRESTOLITE

VENDOR NUMBER	CHRYSLER NUMBER
IGS-2224 R	2084 075
IGS-2224-RB	2421 179
IGS-3004	699 295
IGS-3004 B	699 294
IGT-11 A	677 206
IGT-69	1843 381
IGT-70	863 095
IGT-117	958 177
IGT-1021 R	1308 242
IGT-1021 RN	1308 242
IGT-1072 RE	1407 588
IGW-333-AS	2495 248
IGW-3028 AS	1879 388
IGW-3028 BS	1343 581
IGW-3028 DS	1274 092
IGW-3028 ES	1394 940
IGW-3028 JS	1843 339
IGW-3028 KS	1658 541
IGW-3028 MS	1658 604
IGW-3028 NS	1663 129
IGW-3028 PS	1663 134
IGW-3028-S	674 236
IGW-3028 VS	1879 504
IGW-3028-WS	1879 423
IGZ-1003 A	960 552
IGZ-1016	960 134
K-703	1826 568
K-11427	1826 574
KIT-9	1056 039
KIT-30	1056 041
KIT-31	1056 040
KIT-42	1064 633
L-6300 C-2	1122 921
L-6301 C	1140 836
L-8192-2	1594 936
LM-7795-2	1479 521
MAB-12 A	1614 940
MAB-31	1121 742
MAB-31 A	1135 578
MAB-85	1121 743
MAB-1024 N	1109 742
MAB-1024 NS	1550 079
MAB-2012 CS	1614 933
MAB-2012 DS	1614 940
MAB-2012 GS	1532 990
MAB-2012 HS	1614 933
MAB-2012 JS	1614 940
MAD-96	641 445
MAD-110	636 840
MAJ-20	1300 503
MAK-61 A	1110 989
MAW-12	636 838
MAW-13	636 820
MAW-24	641 457
MAW-35	636 822
MAW-37	636 825
MAW-130	927 093
MAW-161	1112 379
MAW-1009 B	643 827
MAW-1010 B	930 277
MAW-2002 F	1123 011
MAW-2012 S	927 909
MAW-2030	641 443
MAW-2064	648 333
MAW-2069 M	112 947
MAW-2128	927 079
MAW-2129	927 092
MAW-2148	919 949
MAW-2160	1112 380
MAW-2179 M	1134 127
MAW-2206	1195 776
MAW-3132	871 754
MAW-3132 A	1261 402
MAW-4008	1071 819
MAW-4008 M	1113 864
MAW-4029	1070 939
MAW-4032	1070 939
MAW-4041	1113 121
MAX-35	636 817
MAX-47	927 078
MAX-1007 D	1300 513
MAX-1007 F	1300 513
MAX-1008	643 830
MAX-1078 B	1558 156
MAX-2002	636 839
MAX-3005 AS	1300 513
MAX-3098	1261 401
MAX-3098 A	1261 402
MAX-4048	670 662
MAX-4050	868 857
MAX-4062	1075 951
MAY-11	1069 993
MAY-31 C	1662 182
MAY-36	853 754
MAY-1008 A	852 058
MAY-1009 A	852 059
MAY-1010	1069 993
MAY-2012 AS	927 910
MAY-2030	648 012
MAY-4114 A	918 151
MAY-4114 B	918 151
MBD-1007 S	1269 242
MCH-25 A	1390 057
MCH-53	1138 527
MCH-62	1300 509
MCH-63	1300 506
MCH-76	1343 711
MCH-90	1402 587
MCH-1009 B	1138 521
MCH-1009 C	1265 707
MCH-1009 E	1665 062
MCH-1010 B	1138 522
MCH-1010 C	1265 708
MCH-1010 E	1665 062
MCH-1024	641 457
MCH-1051	1138 526
MCH-1074 D	1658 579
MCH-2002 C	1138 525
MCH-2002 F	1383 848
MCH-2002 J	1550 084
MCH-2002 K	1692 752
MCH-2028	1138 524
MCH-2039	1300 505
MCH-2056	1300 510
MCH-2059	1265 709
MCH-2064	1265 032
MCH-2070	1343 705
MCH-2070 A	1402 586
MCH-2074	1343 709
MCH-2074 B	1479 692
MCH-2074 C	1523 299
MCH-2074 E	1633 159
MCH-2088	1383 849
MCH-2088 A	1692 753
MCH-2088 M	1532 983
MCH-2098	1390 065
MCH-2099	1390 062
MCH-2110	1523 306
MCH-3005 ES	1665 062
MCH-3005 KS	1665 062
MCH-3030 C	1692 760
MCH-6201	1473 558
MCH-6205	1473 558
MCH-6208 M	1535 558
MCJ-39 A	1369 642
MCJ-39 B	1369 642
MCL-53	1523 304
MCL-63	1614 923
MCL-65	1616 653
MCL-102	1614 926
MCL-103	1614 927
MCL-127	1752 375
MCL-129 A	1889 379
MCL-132 A	1889 381
MCL-1010 D	1265 712
MCL-2030	1300 516
MCL-2030 A	1558 137
MCL-2030 C	1402 584
MCL-2030 D	1532 982
MCL-2095	1507 060
MCL-2114 S	1616 625
MCL-3005 CS	1300 513
MCL-3075	1343 708
MCL-3098 A	1300 522
MCL-6107	1311 459
MCL-6109	1343 692
MCL-6110	1268 126
MCL-6111	1268 128
MCL-6112	1323 911
MCL-6115 T	1330 243
MCL-6117	1473 187

MyMopar.com

VENDOR NUMBER CROSS REFERENCE LIST

PRESTOLITE

VENDOR NUMBER	CHRYSLER NUMBER
MCL-6121 A	1527 689
MCL-6124	1503 784
MCL-6126	1392 684
MCL-6127 M.	1405 190
MCL 6128 M	1405 191
MCL-6201 M.	1488 216
MCL-6202	1630 683
MCL-6202 M.	1535 559
MCL-6203 M.	1535 560
MCL-6308	1558 155
MCL-6309	1616 627
MCS-12.	1394 973
MCS-46.	1343 706
MCS-46 A	1273 429
MCS-47 A	1273 430
MCS-48.	1271 780
MCS-53.	1273 423
MCS-57.	1271 788
MCS-61.	1271 781
MCS-62.	1271 789
MCS-63.	1271 790
MCS-64.	1271 791
MCS-66.	1271 782
MCS-67.	1271 792
MCS-69.	1271 793
MCS-71.	1271 783
MCS-73.	1271 794
MCS-76.	1271 784
MCS-77.	1273 424
MCS-78.	1273 419
MCS-1002	1271 774
MCS-1012 S	1538 343
MCS-1034 S	1394 974
MCS-1040	1273 420
MCS-1049	1271 785
MCS-1060	1273 421
MCS-1065	1271 786
MCS-1072	1273 425
MCS-1073	1271 787
MCS-1278	1271 775
MCS-2006 F	1271 778
MCS-2012 S	1271 776
MCS-2050	1273 426
MCS-2079 S	1394 972
MCS-2079 S-1	1500 972
MCS-3075	1273 427
MCT-1010	1323 906
MCT-2046 S	1550 623
MCT-2070	1671 293
MCT-2079 M.	1614 212
MCT-2088 M.	1550 624
MCT-3005 BS	1672 727
MCT-6101	1317 790
MCT-6103	1401 014
MCT-6104	1323 915
MCT-6105 M.	1486 137
MCT-6106 M.	1486 138
MCZ-49	1394 988
MCZ-61	1555 272
MCZ-62	1394 978
MCZ-64	1501 821
MCZ-66	1394 979
MCZ-70	1394 981
MCZ-71	1394 982
MCZ-73	1394 986
MCZ-77	1394 989
MCZ-1060	1394 987
MCZ-1065	1394 983
MCZ-1069	1394 980
MCZ-1073	1394 985
MCZ-1074	1394 990
MCZ-2006 F	1394 975
MCZ-2050	1394 991
MCZ-2073	1501 822
MCZ-2097 F	1889 382
MCZ-4004 T	1630 660
MCZ-4103 T	1484 001
MCZ-4109 T	1677 294
MDC-40	1671 310
MDC-2012 BS	1671 317
MDC-2012 CS	1671 306
MDC-6302	1508 761
MDC-6303 T	1630 656
MDD-34	*1752 378
MDD-1005 AS	1658 580
MDF-16	1752 698
MDF-25	1752 695
MDF-26	1658 561
MDF-27	1658 574
MDF-30	1818 502
MDF-31	1752 699
MDF-1002	1658 554
MDF-1005 AS	1658 577
MDF-1005 BS	1662 178
MDF-1005 S	1658 562
MDF-2006	1658 563
MDF-2012 S	1658 552
MDF-6001	1642 140
MDF-6003	1569 178
MDF-6007	1658 033
MDF-6015	1665 053
MDG-1005 AS	1662 181
MDG-1005 S	1658 553
MDG-6001	1627 289
MDG-6002	1627 290
MDG-6003	1569 176
MDL-23	1752 360
MDL-24	1752 361
MDL-25	1752 362
MDL-1002	1752 366
MDL-1005 S	1752 364
MDL-1064	2084 665
MDL-2006	1752 368
MDL-2012 AS	1843 135
MDL-2012 CS	2084 661
MDL-2012 DS	2240 268
MDL-2046	1752 421
MDL-2048	1889 375
MDL-2048 B	2240 266
MDL-2049	2084 871
MDL-2070 S	1843 383
MDL-2076 S	1843 384
MDL-2084	2084 429
MDL-2085	2084 658
MDL-2088	1752 386
MDL-2088 A	2084 890
MDL-2089	2196 323
MDL-2098 S	1843 385
MDL-3123	1752 374
MDL-3132 A	1889 378
MDL-6013	1779 955
MDM-1005 S	1752 390
MDT-1002	2084 662
MDT-1002A	2240 269
MDT-1005 AS	2084 660
MDT-1005 S	1879 319
MDT-2005 AS	2240 260
MDT-2005 S	1889 614
MDT-2085 C	2240 267
MDT-6001	1779 955
MDT-6003	1842 562
MDT-6005	1922 635
MDT-6009	1922 641
MDT-6010	1941 107
MDT-6011	1941 117
MDT-6012	1941 118
MDT-6018	2095 829
MDT-7002	2095 254
MDT-7004 T	2095 496
MDT-7009 S	2095 393
MDT-7010	2095 509
MDT-7011	2095 055
MDT-7014	2098 345
MDT-7101	2095 179
MDU-34	2196 325
MDU-1005 AS	2084 668
MDU-1005 S	1879 574
MDU-6003	1889 260
MDU-7006	1889 955
MDU-7013	2095 296
MDV-2005 S	2084 437
MEC-20	2084 872
MG-77A	652 115
MP-41 A	636 845
MU-54 J	1134 130
MU-54 L	1383 663
MW-20 A	641 454
MZ-12 D	1402 583
MZ-19	636 841
MZ-19 A	1110 986

MyMopar.com

PRESTOLITE

VENDOR NUMBER	CHRYSLER NUMBER
MZ-19 C	1402 585
MZ-175	959 467
MZ-293	1752 385
MZ-2012 AS	1311 457
MZ-2012 BS	1345 005
MZ-2012 DS	1402 602
MZ-2105 B	1123 018
MZ-2108	687 379
MZ-2211	1123 019
NG-10902 T	1188 955
NG-11134 D	1232 666
NG-11453 T	1260 734
NG-11455 T	1260 739
NG-11456 T	1260 747
NG-11457 T	1260 738
NG-11468 T	1260 745
NG-11471 T	1244 508
NG-11484 D	1244 505
P-6	1189 473
P-90-23	1879 604
P-90-24	1879 594
P-90-25	1879 595
P-90-26	1879 596
P-90-27	1879 597
P-90-28	1879 605
P-90-29	1879 606
P-90-30	1879 607
P-90-31	1879 613
P-90-32	1881 721
P-90-33	1881 722
P-90-34	1879 598
P-90-35	1879 599
P-90-36	1879 601
P-90-37	1879 602
P-90-39	1881 747
P-90-40	1881 750
P-90-41	1881 752
P-90-44	1881 766
P-90-46	1881 768
P-90-47	1881 929
P-90-48	1879 603
P-90-49	1881 727
P-90-50	1881 728
P-90-51	1879 611
P-90-52	1879 612
P-90-54	1881 726
P-90-55	1881 724
P-90-56	1881 751
P-90-57	1881 737
P-90-58	1881 756
P-90-59	1881 748
P-90-60	1881 746
P-90-61	1881 754
P-90-62	1881 755
P-90-64	1881 753
P-90-65	1881 719
P-90-66	1881 720
P-90-67	1881 741
P-90-68	1881 740
P-90-69	1881 745
P-90-70	1881 744
P-90-71	1881 743
P-90-75	2084 083
P-90-76	2084 081
P-90-78	2084 294
P-90-79	2084 302
P-90-80	2084 303
P-90-81	2084 432
P-90-82	2084 433
P-90-83	2084 434
P-90-85	2084 435
P-90-92	2084 638
P-90-94	2084 666
P-90-95	2084 667
P-90-96	2084 655
P-90-98	2084 680
P-90-99	2084 858
P-90-100	2084 857
P-90-101	2084 853
P-90-102	2084 854
P-90-103	2084 867
P-90-104	2084 868
P-90-105	2084 869
P-90-106	2084 870
P-90-107	2084 877
P-90-108	2084 878
P-90-109	2084 879
P-90-110	2084 880
P-90-111	2084 881
P-90-112	2084 850
P-90-113	2084 888
P-90-115	2196 330
P-90-116	2240 256
P-90-117	2240 257
P-90-127	2240 294
P-90-128	2240 295
P-90-129	2240 296
P-90-130	2240 297
P-90-131	2240 530
P-90-134	2275 225
P-90-135	2275 226
P-90-143	2275 225
P-90-146	2275 564
P-90-155	2084 869
P-90-167	2298 880
P-90-169	2299 319
P-90-170	2299 320
P-90-198	2298 856
P-90-202	2448 282
P-90-203	2448 283
P-90-204	2448 284
P-90-215	2421 482
P-90-243	2525 255
P-2004 LC	2299 321
PS-651	1850 557
PS-1100	648 334
PS-1194	919 950
PS-1223	1075 947
PS-1234	1110 000
PS-1250	1135 587
PS-1250A	1134 136
PS-1252	1123 012
PS-1291	1138 528
PS-1291 A	1473 339
PS-1291 C	1550 080
PS-1291 D	1550 620
PS-1291 E	1605 551
PS-1291 G	1658 556
PS-1291 H	1658 558
PS-1291 L	1752 388
PS-1291 M	1752 392
PS-1291 V	1889 376
PS-1291 X	1889 796
PS-1294	1265 710
PS-1294 A	1265 713
PS-1294 B	1315 966
PS-1299	1273 431
PS-1301	1369 646
PS-1302	1390 063
PS-1302 A	1390 064
PS-1309 A	1479 104
PS-1309 B	2084 431
PS-1312	1394 992
PS-1316	1523 305
PS-1316 B	1658 575
PS-1316 C	1752 377
PS-1319	1505 929
PS-1319 A	1662 224
PS-1319 B	1818 744
PS-1325 A	1633 160
PS-1325 B	1889 380
PS-1325 C	2084 436
PS-1332	1662 167
PS-1338	1752 380
PS-1342	1843 320
PS-1343	1843 321
PS-1350	1889 262
PS-1354	2084 663
PS-1355	2084 669
PS-1361	2084 874
PS-1364	2196 324
PS-1405	2298 754
PU-6	1370 320
PU-25	1402 504
PU-26	1402 507
PU-34	1440 396
PU-46	1479 178
PU-52	1405 213
PU-52 A	1405 214
PU-52 B	1405 215
PU-52 C	1405 216

MyMopar.com

VENDOR NUMBER CROSS REFERENCE LIST

PRESTOLITE

VENDOR NUMBER	CHRYSLER NUMBER
PU-52 D	1405 217
PU-52 E	1405 218
PU-54	1479 182
PU-60	1479 852
PU-61	1479 853
PU-67	1495 318
PU-88	1504 806
PU-90	1502 703
PU-101	1500 336
PU-102	1540 843
PU-104	1505 907
PU-142	1565 346
PU-143	1565 347
PU-145	1565 881
PU-146	1565 888
PU-147	1565 886
PU-149	1565 890
PU-163	1550 578
PU-167	1508 413
PU-194	1704 263
PU-243	1889 848
PU-244	1889 372
PU-245	1889 371
PU-248	1889 373
PU-249	1842 610
PU-251	1922 614
PU-252	1922 613
PU-274	1889 398
PU-537	1889 946
PU-544	2095 384
PU-1004	1345 973
PU-1007	1370 314
PU-1014	1383 502
PU-1017	1345 974
PU-1041	1473 213
PU-1041 A	1550 595
PU-1049	1405 220
PU-1071	1523 274
PU-1073	1523 268
PU-1115	1594 597
PU-1183	1689 304
PU-1216	1841 519
PU-1227	1770 746
PU-1253	1842 521
PU-1254	1842 781
PU-1255	1842 777
PU-1255 A	1889 544
PU-1256	1842 795
PU-1564	2095 872
PU-1575	2095 677
PU-4004	1818 839
PW-1003	1553 007
RAA-4001 A	1494 798
RAD-4002 L	1627 165
RAH-4001	1566 350
RAH-4002	1626 929
RAH-4003	1843 490
RAM-4001	1842 550
RAM-4002	1842 546
RD-19-300	1631 490
SAA-1043	1550 100
SAA-4002 T	1555 270
SAA-4004 T	1630 660
SAD-39	1752 371
SAD-1022	1658 565
SAD-1022 A	2084 430
SAD-4001	1658 985
SAD-4501	1889 799
SAD-4502	2084 439
SAD-4503	2275 217
SAE-4002	1692 659
SAE-4005	1889 797
SAE-4005 T	2240 272
SAF-4001	1752 340
SAG-4001	1818 738
SAH-4001	1665 052
SAJ-33	2084 873
SAJ-4002	2084 876
SAK-4001	2240 537
SGA-31	1648 009
SGA-32	1648 007
SGA-1055	1769 460
SGA-4003	1605 069
SGA-4013	1769 457
SP-270	583 180
SP-471 B	1194 651
SP-700	1138 511
SP-782	1113 862
SP-783 A	1090 485
SP-784	1113 233
SP-843	1123 540
SP-887	1263 560
SP-894	1194 599
SP-904	1126 616
SP-939	1263 488
SP-959	1311 469
SP-959 A	1402 509
SP-964	1264 966
SP-965	1262 993
SP-966	1268 983
SP-974	1319 434
SP-976	1320 117
SP-983	1264 986
SP-983 A	1264 986
SP-994 P2	1473 596
SP-1272 A	1450 760
SP-1294 A	1265 713
SP-1299	678 495
SP-1311	585 854
SP-1889	1136 924
SP-1913	1136 935
SP-1936	1257 393
SP-1936 A	1402 510
SP-1949	1297 974
SP-1954	1264 943
SP-1977	1319 443
SP-4016	924 065
SPS-224	1689 598
SPS-1105 AG	926 080
SPS-1105 BB	1089 709
SPS-1105 BJ	1163 782
SPS-1105 BK	860 195
SPS-1105 BM	920 402
SPS-1105 BP	910 562
SPS-1105 BS	1260 731
SPS-1105 E	859 992
SPS-2099	595 372
SPS-2099 B	595 366
SPS-2105 H	926 079
SPS-2157 E	1257 335
SPS-2157 F	595 372
SPS-2209 A	1501 745
SPS-2223 B	1689 077
SPS-2235 A	1819 948
SPS-2235 C	1819 957
SPS-2235 D	1819 960
SPS-2235 E	1819 981
SPS-2235 G	1819 990
SPS-2235 H	1819 939
SPS-2235 N	1819 972
SPS-2235 O	1819 960
SPS-2235 R	1819 975
SRP-87 S	2421 174
SRP-88	2421 175
SRP-91	2421 176
SRP-92	2421 177
SS-54	652 122
SS-176	861 494
SS-239	1315 968
SS-2124	675 955
SS-2124 E	861 499
SS-2124 M	1315 967
SS-2124 N	1323 909
SS-3035 RAE	1115 389
SS-3035 RAH	1315 969
SS-3070 R	636 863
SS-3070 RD	861 500
SS-4001	648 336
SS-4003	1121 741
SS-4020	927 081
SS-4204 A	863 124
SS-4214	1323 908
SS-4704	871 758
SS-4705	957 467
SS-4706	1115 382
SS-4707	1300 507
SS-4708	1315 970
SSA-1043	1550 100
SSP-4001 M	1075 941
SSP-4003 M	1488 227
SSR-4002 M	1553 029

MyMopar.com

PRESTOLITE

VENDOR NUMBER	CHRYSLER NUMBER
SSS-4003	1126 633
SST-4007	1383 605
SST-4013	1605 435
SSX-13	1752 372
SSX-22	1345 006
SSX-25	1345 021
SSX-26	1345 018
SSX-57	1479 683
SSX-1004	1495 598
SSX-1024	1495 598
SSX-1059 S	2495 230
SSX-4002	1495 598
SSX-4003	1495 598
SSX-4004	1529 144
SSX-4101	1343 695
SSX-4103	1671 279
SSX-4103 T	1402 588
SSX-4104	1633 158
SSY-1043	1404 639
SSY-4002	*1498 878
SSY-4101	1671 312
SSY-4101 T	1402 599
SSY-4102	1671 294
SSY-4102 T	1616 654
SW-213	1689 763
SW-530 H	1569 118
SW-634	120 387
SW-634	120 392
SW-764 S	1501 797
SW-2813	641 462
SW-2827	1390 061
TG-22	958 336
TG-88	1126 640
TG-2075 D	1297 999
TGE-1003 L	1527 958
TGE-4010	1479 737
TGG-4001	1370 204
VAD-116 A	1273 383
VAD-117 A	1273 384
VAD-166 A	1273 461
VAD-176	1273 462
VAD-1118	1273 385
VAV-1022	1406 639
VAV-7006 AT	1532 966
VBA-4202 A	1343 122
VBA-4203 A	1268 222
VBC-2	1273 463
VBC-18	1273 473
VBC-19	1273 464
VBC-21	1273 465
VBC-22	1273 474
VBC-23	1273 363
VBC-25	1273 364
VBC-30	1273 466
VBC-31	1273 467
VBC-40	1273 365
VBC-42	1273 366
VBC-46	1273 469
VBC-47	1273 367
VBC-57	1394 890
VBC-64	1394 892
VBC-1016	1273 470
VBC-1029	1273 386
VBC-1036 A	1273 368
VBC-1040 S	1273 471
VBC-1044	1273 369
VBC-1052	1394 889
VBC-1055	1273 374
VBC-1061	1273 376
VBC-1080	1273 377
VBC-3008	1273 375
VBC-3070	1273 381
VBC-3071	1273 390
VBC-4002 UT	1268 962
VBF-6001 A	1343 122
VBF-6002 A	1343 124
VBF-6005 T	1534 162
VBJ-6001 AT	1486 145
VBO-4202 AC	2095 200
VBO-4202 BC	1889 944
VBO-4202 CC	2095 341
VBO-4202 CTC	2095 499
VBO-4202 HC	2095 202
VBO-4202 JC	2095 203
VBO-4202 KC	2095 204
VBO-4202 LC	2095 205
VBO-4202 MC	2095 206
VBO-4202 RC	2095 204
VBO-4402 ATC	2095 207
VBO-4602 AC	2095 208
VBO-4602 BC	2095 209
VBO-4602 BTC	2095 210
VBO-4602 EC	2095 211
VBO-4602 FC	2095 212
VBO-4602 GC	2095 213
VBO-4602 KC	2095 214
VBO-4602 LC	2095 215
VBO-4602 MC	2095 216
VC-45	691 712
VC-167	1527 977
VC-175	1818 668
VC-178	1818 650
VC-179	1818 645
VC-1039 A	1135 574
VC-2082 R	1135 576
VC-2117 R	1135 577
VC-3147	1261 011
VLB-3173 L	1753 707
VLB-3173 R	1753 706
VP-19	137 423
VRA-15	927 950
VRA-16	927 951
VRA-17	927 952
VRA-46	928 566
VRA-1060 A	1273 380
VRB-4003 T	1798 550
VRH-51	1402 513
VRH-4103 A-1	913 344
VRH-4104 D1	913 344
VRH-7107 B-1T	1401 019
VRP-100 D	1273 388
VRP-100 E	1273 389
VRP-100 K	1394 891
VRP-4303 DM	1571 164
VRP-6004 B	1323 902
VRS-6001 AM	1321 758
VRS-6003 AM	1109 771
VRU-6001 AM	1553 027
VRU-6002 AM	1553 028
VRU-6002 BM	1550 579
VRW-6003 AM	E-71249-M
VRW-6004 BM	1535 592
VRW-6006 AM	1553 024
VRW-6007 AM	1553 030
VRX-6001 A	1323 923
VRX-6003 A	1496 058
VRX-6003 C	1660 457
VRY-4203 F	922 487
VRY-4203 G	922 487
WLB-8	6006 065
WLB-9	1383 351
WLB-12	1256 337
WLB-94	1440 596
WLB-110	1540 188
WLB-111	6008 110
WLB-168	1689 167
WLB-179	6006 070
WLB-2124 L	1604 904
WLB-2124 R	1604 903
WLB-2172 L	1753 837
WLB-2172 R	1753 836
WLB-3022 LS	1658 769
WLB-3022 RS	1658 768
WLB-3079 L	1473 017
WLB-3090 LB	1604 451
WLB-3090 LH	1704 715
WLB-3090 R	1440 507
WLB-3090 RB	1604 450
WLB-3090 RH	1704 714
WLB-3090 LH	1704 715
WLB-3115 LS	1860 963
WLB-3115 RS	1860 962
WLB-3132 L	1819 166
WLB-3173 L	1753 707
WLB-3173 R	1753 706
WLB-3173 LA	1753 239
WLB-3173 RA	*1753 238
WLB-3174 L	*1819 166
WLB-3174 R	*1819 167
WLB-3178 L	1753 241
WLB-3178 R	1753 240

MyMopar.com

VENDOR NUMBER CROSS REFERENCE LIST

PRESTOLITE

VENDOR NUMBER	CHRYSLER NUMBER
WLB-3180 L	*1753 351
WLB-3180 R	1753 350
WLB-3190 L	1770 025
WLB-3190 R	1770 024
WLB-3191 L	1770 033
WLB-3191 R	1770 032
WLB-3211 L	1810 787
WLB-3211 R	1810 786
XA-548 R	647 165
XA-584	137 407
XA-595 A	120 367
XA-646	110 309
XA-699	1273 370
XA-736	1122 042
XA-744 C	1273 428
XA-744 J	1273 458
XA-744 K	1273 459
XA-744 L	1273 460
XA-744 M	1271 777
XA-744 N	1273 378
XA-744 S	1394 984
XA-748	1271 772
XA-751	1271 765
XA-765	1273 387
XA-766	1273 379
XA-767	1273 434
XA-767 A	1501 831
XA-770	1273 391
XA-773	1527 254
XA-776	1273 435
XA-777	1273 436
XA-782	1273 372
XA-783	1273 373
XA-785	1383 347
XA-794	1405 225
XA-801	1091 629
XA-803	1440 489
XA-803 A	1688 919
XA-815	1594 834
XA-823 A	1616 612
XA-827	903 895
XA-836 A	1753 285
XA-839	1689 763
XA-863	1818 815
XA-903	2095 627
8X-53	132 764
8X-55	121 832
19X-93	180 079
19X-141	120 622
8X-146	120 375
8X-147	120 376
8X-158	120 371
8X-159	120 369
X-163 A	113 739
8X-163	120 375
X-176	113 103
12X-193	120 380
X-194	131 044
12X-194	131 044
X-198	120 384
12X-198	120 384
8X-199	120 380
12X-199	120 380
X-204	131 206
X-258	106 749
19X-258	106 749
X-263	103 906
X-295 A	1889 235
8X-323	121 839
8X-361	120 392
19X-361	120 392
X-378	620 528
X-404	121 244
X-441	659 799
X-489	113 702
8X-645	132 696
19X-709	1321 110
8X-712	661 825
8X-714	132 930
6X-832	120 368
8X-832	120 368
X-842	126 049
X-865 A	143 932
8X-878	131 974
19X-884	131 949
8X-902	132 105
19X-902	132 105
X-931	1274 093
8X-1002	120 628
8X-1014	120 214
8X-1063	120 367
10X-1063	120 367
X-1134	131 016
X-1177	138 502
X-1284	138 485
8X-1376	120 368
X-1379	1273 422
X-1491	147 686
19X-1494	132 764
X-1512	1879 391
X-1520	147 685
8X-1576	120 392
X-1590	953 717
X-1610	120 368
X-1649	114 545
X-1711	174 916
8X-1711	174 916
12X-1711	174 916
8X-2843	114 546
X-2845	134 570
X-2955	1394 893
X-3003	1630 649
X-3008	200 156
8X-3017	132 915
X-3031	131 949
X-3032	151 510
X-3037	1273 442
X-3038	1273 456
X-3051	151 507
X-3053	151 517
X-3054	151 518
X-3055	151 519
X-3060	178 469
12X-3074	120 380
X-3075	120 375
X-3090	151 504
X-3135	1479 097
X-3155	1405 223
X-3187	1483 522
X-3217	113 103
X-3226	1552 884
X-3316	* 770 296
YRS-6009 AM	1672 803
81-RG	2448 252
2012 BS	2084 291
6010 S	1658 865
9738 A	595 361
10870	652 115
13851 A	1566 398
10886 A	1154 292
11397 A	1195 746
11399 A	1195 741
11400 A	1195 745
11401 A	1195 742
11434 A	1195 709
11450 A	1195 743
11526 A	1261 467
11538 A	1240 864
11610 A	1257 270
11652 A	1263 499
11680 A	1302 621
11728 A	1302 632
11729 A	1302 630
11783 A	1297 695
11821 A	1257 602
11822 A	1257 604
12103 A	1340 309
12104 A	1340 310
12109 A	1340 314
12110 A	1340 315
12127 A	1340 299
12139 A	1339 824
12306 A	1369 698
12307 A	1369 699
12310 A	1369 697
12348 A	1271 228
12412 A	1272 352
12414 A	1272 351
12415 A	1272 353
12783 A	1473 848
12818 A	1473 882

MyMopar.com

PRESTOLITE

VENDOR NUMBER	CHRYSLER NUMBER
13091 A	1495 806
13455 A	1571 827
13514 A	1571 704
13535 A	1571 705
13541 A	1571 524
13615 A	1550 103
13630 A	1509 659
13678 A	1660 852
13683 A	1594 753
13709 A	1604 704
13726 A	1604 729
13739 A	1604 228
13740 A	1604 229
13752 A	1622 135
13754 A	1622 622
13778 A	1604 808
13851 A	1566 398
13912 A	1566 399
13964 A	1569 117
13965 A	1569 118
14018 A	1648 566
14019 A	1648 567
14039 A	1658 102
14044 A	1627 484
14071 A	1660 852
14072 A	1660 853
14073 A	1660 854
14195 A	1658 825
14196 A	1648 811
14200 A	1648 819
14201 A	1648 830
14202 A	1648 820
14203 A	1648 822
14204 A	1648 821
14208 A	1663 046
14235-A	1689 411
14259	1753 797
14263 A	1753 599
14265 A	1753 590
14266 A	1753 593
14272 A	1818 830
14280 A	*1663 235
14296 A	1753 769
14297 A	1753 766
14298 A	1753 759
14309-A	1819 281
14310 A	1819 282
14321 A	1819 293
14322 A	1819 294
14323 A	1819 295
14324 A	1819 296
14331 A	1779 532
14332 A	1779 557
14336 A	1779 551
14374 A	1838 044
14375 A	1838 043
14376 A	1838 045
14377 A	1838 046
14406 A	1770 093
14433 A	1663 236
14436 A	1779 551
14580 A	1788 621
14581 A	1788 622
14906-A	1798 594
14907 A	1798 595
14908A	1798 596
14915 A	1798 610
14921 A	1923 544
15007 A	1798 750
20702	939 548
23178	1154 399
23935	1262 972
24037	1263 532
24448	1310 382
24511	1300 980
25062	1753 800
25611	1272 373
26082	1473 753
26408	1394 272
27045	1622 819
27123	1622 832
27174	1605 003
27189	1605 004
27235	1626 882
27275	1626 968
27887	1753 739
27934	1769 113
27935	1769 112
28673	1819 429
28703	1819 430
28704	1819 431
28707	1819 438
28849	1819 223
28997	1788 624
29005	1788 627
72200	1658 838
200477	1818 836
200847	2084 847
201006	2095 759
303604	1688 207
303718	1842 000
435361 B	1273 355
4056060	1273 355

MyMopar.com

May, 1965 Supersedes Nov. 30, 1964.

VENDOR NUMBER CROSS REFERENCE LIST

STROMBERG

VENDOR NUMBER	CHRYSLER NUMBER
3-85	1241 507
3-99	1317 260
3-191	2120 975
1191S-8	2229 666
1928 N	1826 565
125666	1508 491
125676	1786 521
126222	1194 871
126345	1569 505
126358	1661 481
126481	2228 748
126671	1786 519
126672	1786 524
127341	1921 369
374146	1935 343
377631	1792 370
377632	1792 371
377637	1792 372
379868	1935 344
380249	1312 120
380261	1317 260
380262	1317 261
380319	1409 941
380320	1404 045
380322	1484 347
380326	1485 966
380327	1485 967
380330	1489 789
380331	1489 786
380340	1530 598
380360	1612 232
380363	1613 072
380365	1613 074
380376	1616 350
380388	1632 458
380391	1636 646
380393	1636 648
380396	1637 354
380404	1639 936
380406	1676 332
380408	1676 334
380423	1639 706
380424	1674 823
380428	1730 456
380431	1673 744
380440	1736 093
380442	1736 095
380443	1736 096
380444	1736 097
380451	1738 618
380452	1738 619
380458	1738 406
380464	1826 102
380466	1826 099
380476	1828 000
380905	1851 553
380906	1851 554
380922 (WW3-181)	1858 460
380934 (WW3-176)	1944 810
380935 (WW3-177)	1944 811
380936 (WW3-178)	1944 812
380937 (WW3-179)	1944 813
380943	1947 841
380948	1859 944
380951 (WW3-182)	1945 482
380953	1945 422
380958	1679 303
380963 (WW3-185)	1947 338
380970	2120 064
380971	2120 065
380984 (WW3-192)	2120 977
380985 (WW3-193)	2120 976
380988 (WW15-43)	2121 779
380989	2121 780
381000 (WW15-45)	2202 887
381012 (WW3-198)	2203 131
381014 (WW3-200)	2203 134
381015 (WWC3-201)	2299 171
381055 (WA-3-219)	2402 507
381057 (WW3-221)	2402 545
381060 (WW3-224)	2402 591
381063 (WW3-227)	2402 817
381070 (2402093 carb)	2299 154
381071 (2402094 carb)	2299 155
381072 (2402095 carb)	2299 156
381073 (2402096 carb)	2299 157
381074 (2402098 carb)	2299 158
381078 (WW)	2407 184
381090	2463 851
381092	2463 853
381093 (WWC3-242B)	2463 854
381095 (WW3-243)	2495 983
381098 (WWC3-244B)	2465 319
381104 (WW3-245)	2407 726
381107	2495 980
381108	2495 981
381502	2275 255
381507	2299 092
381508	2299 259
381510	2299 279
381511	2299 163
381512	2299 269
381515	2585 444
381517	2585 453
381612	2275 289
381615	2275 293
381628	2275 290
381632	2275 291
381650	2299 093
381651	2299 101
381654	2299 095
381655	2299 099
381664	2299 165
381666	2299 260
381670	2299 280
381671	2299 270
381675	2525 702
381676	2525 703
381677	2525 704
381678	2525 705
381679	2585 445
381681	2585 454
381683	2585 455
382340	2084 728
382348	1826 559
382357	1631 366
382359	1631 368
382363-4	1610 817
382369	1826 590
382371	1610 818
382454	869 577
382548	869 638
382897	957 323
384338	1486 390
384368	1610 838
384657	1138 695
384956	1138 697
385056	1312 276
385100	1312 284
385120	1316 746
385449	1323 833
385499	1535 993
386108	1531 383
386117	1531 384
386136	1534 460
386202	1533 763
386205	1533 766
386207	1533 768
386208	1533 769
386208	1534 462
386208	1534 463
386208	1553 086
386208	1553 087
386208	1618 176
386208	1618 205
386208	1631 448
386208	1631 454
386208	1631 455
386208	1631 456
386208	1631 457
386208	1631 702
386208	1676 659
386208	1826 151
386227	1479 527
386290	1539 149
386498	1553 093
386724	1618 178
386776	1618 184
386797	1618 185
386904	1618 216
386906	1618 201

MyMopar.com

STROMBERG

VENDOR NUMBER	CHRYSLER NUMBER
386943	1631 339
386949	1631 353
386951	1631 377
386988	1631 486
387144	1631 656
387184	1631 709
387189	1631 673
387236	1631 695
387237	2299 178
387410	1738 613
387411	1738 614
387444	1676 821
387745	1826 862
387749	1826 414
387806	1852 020
387807	1852 051
387829	2448 945
388062	1947 842
388111	2084 729
388111	2240 400
388186	2299 090
388186	2299 121
388186	2299 257
388186	2525 719
388186	2525 720
388211	1826 885
388471	2084 733
388481	2084 730
388494	2084 731
388511	2299 163
388519	2084 732
388539	2299 254
388539	2299 263
388539	2585 442
388539	2585 446
388544	2196 200
388558	2196 204
388592	2240 436
388655	2275 257
388657	2240 454
388661	2240 456
388711	2275 262
388883	2299 085
388887	2299 089
388984	2299 274
388989	2299 275
388990	2299 277
389025	2299 276
389039	2299 262
389047	2299 253
389056	2402 786
389062	2299 256
389084	2407 038
389137	2463 271
389190	2448 971
389191	2448 973
389304	2465 526
389312	2532 569
389323	2585 428
389323	2585 439
389338	2585 429
389359	2585 414
389364	2585 441
389374	2585 413
389376	2585 412
389380	2585 451
389430	2585 456
389432	2585 452
427047	E-71816-M
478957	1889 938
610648	2229 688
610649	2229 687
610654	2227 704
610655	2229 693
610678	2227 703
610688	2227 705
615229	1934 980
615256	1934 981
615375	2226 520
615418	2227 257
615419	2227 256
615431	2227 255
615434	2227 406
615459	2227 162
901002	131 044
901006	120 380
902024-K1	132 688
902963-K1	132 056
903899-K1	131 954
903922-K1	132 056
904230-K1	132 105
909064K6	2278 900
AAVP-2	1530 598
BVX-3-110	1489 789
J-5968	1610 819
P-112-S-22	112 726
P-2290	120 614
P-2866	131 958
P-3157	120 380
P-18811	1123 980
P-18839	137 406
P-19442-060	852 777
P-19442-061	957 331
P-21197	662 762
P-21198	1531 371
P-21918	959 232
P-22499	677 620
P-23361	1631 694
P-23567	1486 385
P-23606	1631 496
P-23676	691 200
P-23912	1610 836
P-24827	861 129
RK-143	1610 815
RK-148	1618 123
RK-149	1610 816
RK-158	1826 586
RK-172	1610 814
RK-177	1826 588
RK-185	1618 124
RK-188	1631 365
RK-194	1631 451
RK-195	1631 495
RK-197	1631 682
RK-220	1676 721
RK-222	1676 722
RK-223	1676 720
RK-229	1676 812
RK-231	1826 152
RK-232	1826 154
RK-233	1826 155
RK-235	1826 271
RK-236	1826 272
RK-240	1826 331
RK-241	1826 423
RK-242	1826 539
RK-243	1826 540
RK-244	1826 541
RK-245	1826 557
RK-246	1826 558
RK-251	1826 850
RK-253	1826 866
RK-258	2084 113
RK-259	2084 114
RK-260	2084 115
RK-261	2084 116
RK-267	2084 722
RK-268	2084 723
RK-269	2084 724
RK-270	2084 725
RK-271	2084 726
RK-272	2084 727
RK-273	2196 202
RK-276	2240 455
RK-277	2240 457
RK-280	2275 256
RK-281	2275 258
RK-285	2275 274
RK-287	2275 280
RK-297	2299 086
RK-298	2299 091
RK-299	2299 103
RK-301	2299 082
RK-317	2299 161
RK-321	2299 258
RK-323	2299 255
RK-325	2299 264
RK-328	2299 278
RK-331	2299 268
RK-335	2299 298
RK-339	2448 972

MyMopar.com

VENDOR NUMBER CROSS REFERENCE LIST

STROMBERG

VENDOR NUMBER	CHRYSLER NUMBER
RK-343	2495 970
RK-345	2525 721
RK-347	2585 448
RK-349	2585 443
RK-351	2585 449
RK-353	2585 430
RK-355	2585 440
RK-686	1826 602
WW-15-28	1826 101
WW3-105A	1409 941
WW3-106A	1404 045
WW3-108A	1485 966
WW3-110	1489 789
WW3-130	1617 861
WW3-142	1676 332
WW3-144	1676 334
WW3-145	1639 706
WW3-146A	1674 823
WW3-147	1730 456
WW3-152	1828 000
WW3-161	1738 406
WW3-171	1851 554
WW3-173	1851 556
WW3-184	1945 422
WW3-198	2203 131
WW3-199	2203 133
WW3-200	2203 134
WW3-201	2205 757
WW3-202	2264 859
WW3-203	2264 860
WW3-204	2264 861
WW3-205	2264 862
WW3-207	2264 864
WW3-211	2265 032
WW3-214	2402 094
WW3-239	2463 851
WW3-241	2463 853
WW3-258	2536 881
WW3-259	2536 881
WW3-260	2658 658
WW3-261	2536 683
WW3-263	2536 899
WWC3-242	2463 854
WWC3-244	2465 319
WWC3-262	*2536 898

MyMopar.com

VENDOR NUMBER CROSS REFERENCE LIST

TIMKEN

VENDOR NUMBER	CHRYSLER NUMBER
5-BC	669 077
6	618 311
6-AX	1316 791
6-CE	632 685
7-C	1536 251
11-BA	376 749
11-BC	640 086
12-CB	1532 736
13-C	376 751
14-C	637 539
14-CE	1532 737
15-BA	386 645
16	386 642
18	924 262
35-BC	640 892
36-X	675 117
38-A	1273 099
T-83	959 141
T-138	531 031
T-163	1567 687
332	304 003
339	568 675
342-S	314 951
382	527 722
387-A	527 521
394-A	527 745
394-AS	1667 854
395	536 645
395-A	1508 700
432	531 053
444	579 104
453-X	1662 719
462	1662 721
472-A	510 764
472-A	1264 092
482	1264 090
485-T	1264 869
493	1264 086
495	107 363
495	1663 767
495-A	1264 084
495-AX	1663 767
496	1191 987
498	1264 091
532-A	531 050
537	554 272
539	531 049
552-A	1192 238
559	1192 237
560	572 032
563	503 248
566	519 107
572	530 133
575	530 371
580	572 037
581	553 219
582	1192 001
592-A	1192 542
598-A	1192 543
15x899	2230 738
1107Z78	1196 869
1199R2176	2232 800
1220	622 266
1229-U-1503	2230 739
1246-M-91	1785 512
1280	622 267
1729	698 401
1755	698 402
1780	1262 533
1780	1662 675
2203-H-203	1923 858
2208-T-514	2233 259
2240-W-1245	1272 071
2240-X-1246	1272 072
2240-W-1248	1272 074
2240-Y-1247	1272 073
2523	698 390
2578	1662 741
2585	698 391
2631	55 584
2691	1193 749
2720	310 213
2735-X	1188 715
2736	681 318
2780	1188 716
2786	22 678
2790	41 591
2793	927 375
2820	854 617
2877	854 618
2924	927 016
2984	927 018
3102-Y-1923	1938 420
3133-C-7615	1927 083
3144-L-194	1789 546
3144-M-195	1789 547
3200-H-606	2230 357
3200-T-540	2153 260
3202-B-2966	2230 307
3278-P-146	2230 699
3278-T-150	2231 970
3420	51 094
3476	376 505
3479	1667 638
3525	305 654
3525	1662 740
T3564	568 483
3585	668 122
3586	1662 742
3720	503 229
3736-D-394	2226 459
3736-E-395	2226 458
3778	570 918
3780	913 778
3820	619 395
3826-A-261	1667 422
3876	567 226
3878	856 859
3880	668 520
3891-F-1228	2231 418
3891-U-1087	2231 419
3892-D-1746	2231 421
3892-W-1921	2231 420
3920	1662 783
3975	1270 856
3979	1192 110
3982	1662 785
3984	1662 722
3994	1789 829
A-4059	625 119
A-4138	625 118
5535	1793 637
5566	1192 735
5577	1508 901
5720	1503 911
5784-T	1503 910
9121	1267 718
9181	1267 721
9185	1267 719
02820	1793 512
02872	1793 513
09062	1274 672
09067	1139 292
09074	698 389
09194	698 388
09195	1139 291
11520	1793 515
11590	1793 514
LM-11710	2421 061
LM-11749	2421 061
LM-11910	2421 067
LM-11949	2421 067
12520	1662 607
12580	1662 723
12610	1790 244
12649	1790 241
14116	1790 525
14119-A	1189 687
14124	912 161
14125-A	698 395
14130	698 410
14137-A	589 211
14138-A	698 396
14274	698 409
14276	698 394
15101	1790 546
15123	1139 294
15245	1139 293
18620	1792 268
18685	1792 267
23100	927 014

MyMopar.com

May, 1965 Supersedes Nov. 30, 1964.

VENDOR NUMBER CROSS REFERENCE LIST

TIMKEN

VENDOR NUMBER	CHRYSLER NUMBER®
23256	927 013
24720	926 162
24780	912 160
25520	2421 066
25523	1793 510
25576	929 194
25577	1793 511
25580	2421 066
25590	2421 065
25821	2421 064
25877	2421 064
26822	671 604
26823	1662 673
26884	1662 674
28521	1795 352
28580	1795 353
28622	927 015
28682	927 017
28920	587 531
28985	587 530
31520	698 413
31590	698 414
31593	698 415
31594	1793 516
31597	1795 927
33275	1660 794
33281	1662 786
33462	1662 784
33472	1660 792
33821	926 245
33891	926 244
34301	1666 152
34500	1666 151
35175	698 398
A3736D-394	2226 459
A3736E-395	2226 458
39520	1662 791
39580	1263 857
39581	1267 212
39590	1662 793
41125	568 463
41286	568 462
42381	1264 085
42584	1264 088
42620	1662 792
42687	1191 989
42688	1196 228
42688	1662 794
44143	1667 864
NA-44143-44363-D.	926 261
NA-44143-44363-D.	587 545
44162	1667 037
44348	537 819
L-44610	2421 062
L-44649	2421 062
45220	1789 610
45284	1789 611
46176	856 861
46368	688 474
47490	1793 403
47620	1192 423
47686	1192 424
47687	1668 285
47820	1267 696
47890	1267 697
LM-48510	1789 754
LM-48548	1789 755
49151	563 574
49520	587 551
49577	1192 235
49585	588 887
52400	127 841
53162	543 659
53177	1509 052
53375	1264 089
53387	530 020
55176	1191 867
55187	1191 748
55200	117 186
55443	1191 868
59175	563 571
59187	92 624
59200	566 600
59412	563 572
65200	1668 279
65225	1268 057
65237	1789 002
65320	1192 127
65384	1192 126
65390	1192 129
65500	1268 058
66200	1666 158
66212	1666 338
66225	1270 874
66462	1270 873
67010	2421 068
72188	1191 914
72200	1191 917
72218	1503 924
72225	1666 341
72487	1191 916
78214	1192 439
78225	1192 436
78551	1192 437
M-88010	1820 551
M-88048	1820 552
HM-89410	1401 810
HM-89443	1401 808
HM-89446	1401 809
HM-212011	1669 981
HM-212044	1669 980
H-414210	1268 075
H-414242	1508 912
H-414245	1268 074
HM-516410	1668 284
HM-516449	1668 286
LM-67048	2421 068
LM-501310	2421 063
LM-501349	2421 063
H-715311	1393 095
H-715334	2230 480
H-715343	2230 481
H-715345	1393 092
HM-801310	1404 470
HM-801346	1404 469
HM-803110	1327 847
HM-803112	1405 885
HM-803145	1327 846
HM-803145	1667 008
HM-803149	1404 472
HM-804810	1327 850
HM-804843	1566 143
HM-804846	1327 849
HM-807010	1799 297
HM-807040	1667 408
HM-807046	1393 091
HM-813810	1566 147
HM-813842	1566 146
813844	1661 378

MyMopar.com

ZENITH

VENDOR NUMBER	CHRYSLER NUMBER
62AJ10	1533 324
62AJ12-0-12572	2125 532
10945 A	1323 887
11000	1323 888
11426	E-2726-M
11427	E-2732-M
11481	E-2741-M
11583 B	E-3135-M
427047	E-71 816-M
B1807	E-24 374-M
B1808	E-71 817-M
C36-15	1826 874
C36-23	1323 825
C38-14A30	1120 683
C41-9	1117 454
C51-3-19	1531 366
C52-1-18	1316 052
C52-6-23	1676 658
C52-6-24	1539 169
C52-6-29	1120 689
C52-13-23	1826 871
C52-13-27	1826 869
C52-13-30	1826 870
C52-13-37	1320 108
C52-14-17	1826 873
C52-14-27	1323 821
C66-25-1-60	1316 055
C66-33-1-75	2275 269
C81-1-40	1316 729
C81-20-50	1120 693
C97-10-13	1121 184
C97-10-14	1120 695
C97-10-17	1121 101
C97-10-19	1323 822
C97-16-0	1322 721
C97-16-24	1826 872
C111-17	925 460
C136-3	925 484
C140-7	925 487
C141-4-12	2125 828
C141-4-13	1531 367
C177-5	E-67 564-M
C178-10	E-67 882-M
C-181-55	1826 581
C181-56	1826 582
C181-65	1631 777
C181-73	1826 585
C181-99	1826 584
C181-101	1826 583
EF-337	915 093
FIX 10	919 446
FIX 15	919 452
F5-7	919 451
F6-12	915 891
F7-121	919 444
F2X3	1122 541
F290 X2D	870 449
F353	965 039
GR41-4	1826 868
K-S637	1826 566
K-660	1826 569
K-10640	1826 570
K-11000	1826 572
K-11426	1826 573
K-11427	1826 574
K-11481	1826 575
K-11534	1826 576
K-11583	1826 577
K-11885	1826 578
K-11962	1826 579
K-12145	1826 580
K-12572	2275 272
O-10640	E-98 695-M
O-12145	E-4776-M
P-3157	120 380
P-18811	1123 980
T43-6	131 044
T43-103	120 214
T56B6-4	100 944

MyMopar.com

VENDOR NUMBER CROSS REFERENCE LIST

VENDOR NUMBER	CHRYSLER NUMBER	VENDOR NUMBER	CHRYSLER NUMBER	VENDOR NUMBER	CHRYSLER NUMBER

ZENITH

MyMopar.com